UNITED STATES OF AMERICA
BEFORE THE
FEDERAL ENERGY REGULATORY COMMISSION

North American Electric Reliability Corporation	**)** **)**	**Docket No. RM13-_____**

PETITION OF THE NORTH AMERICAN ELECTRIC RELIABILITY CORPORATION FOR APPROVAL OF PROPOSED RELIABILITY STANDARD PRC-005-2 (PROTECTION SYSTEM MAINTENANCE)

Gerald W. Cauley
President and Chief Executive Officer
North American Electric Reliability Corporation
3353 Peachtree Road, N.E.
Suite 600, North Tower
Atlanta, GA 30326
(404) 446-2560
(404) 446-2595– facsimile

Charles A. Berardesco
Senior Vice President and General Counsel
Holly A. Hawkins
Assistant General Counsel
William H. Edwards
Attorney
North American Electric Reliability Corporation
1325 G Street, N.W., Suite 600
Washington, D.C. 20005
(202) 400-3000
(202) 644-8099– facsimile
charlie.berardesco@nerc.net
holly.hawkins@nerc.net
william.edwards@nerc.net

Counsel for the North American Electric Reliability Corporation

February 26, 2013

TABLE OF CONTENTS

I. EXECUTIVE SUMMARY 2
II. NOTICES AND COMMUNICATIONS 4
III. BACKGROUND 5
A. Regulatory Framework 5
B. History of PRC-005 and Project 2007-17 6
1. PRC-005 and Related Reliability Standards 6
2. NERC System Protection and Control Task Force 8
IV. JUSTIFICATION FOR APPROVAL 9
A. Basis for Approval and Purpose of Proposed PRC-005-2 9
1. Improvements Reflected in Proposed PRC-005-2 11
2. Commission Directives 12
3. Requirements in Proposed PRC-005-2 14
B. Enforceability of Proposed PRC-005-2 18
V. SUMMARY OF RELIABILITY STANDARD DEVELOPMENT PROCEEDINGS 19
A. Overview of the Standard Drafting Team 19
B. Proposed PRC-005-2 Development History 19
1. PRC-005-2 Development – Standard Authorization Request 19
2. PRC-005-2 Development – Reauthorization 23
VI. CONCLUSION 27

Exhibit A Order No. 672 Criteria
Exhibit B Proposed Reliability Standard PRC-005-2
Exhibit C Implementation Plan for Proposed Reliability Standard PRC-005-2
Exhibit D Technical Justification: PRC-005-2 Protection System Maintenance
Exhibit E PRC-005-2: Supplementary Reference and FAQ
Exhibit F Technical Justification for Maintenance Intervals
Exhibit G Mapping Document
Exhibit H Consideration of Comments for Proposed Reliability Standard PRC-005-2
Exhibit I Discussion of Assignments of VRFs and VSLs
Exhibit J Record of Development of Proposed Reliability Standard PRC-005-2

TABLE OF CONTENTS

Exhibit K Standard Drafting Team Roster for NERC Standards Development Project 2007-17 (Protection System Maintenance and Testing)

UNITED STATES OF AMERICA
BEFORE THE
FEDERAL ENERGY REGULATORY COMMISSION

North American Electric Reliability Corporation	**)** **)**	**Docket No. RM13-_____**

PETITION OF THE
NORTH AMERICAN ELECTRIC RELIABILITY CORPORATION
FOR APPROVAL OF PROPOSED RELIABILITY STANDARD
PRC-005-2 (PROTECTION SYSTEM MAINTENANCE)

Pursuant to Section 215(d)(1) of the Federal Power Act ("FPA")[1] and Section 39.5[2] of the Federal Energy Regulatory Commission's ("FERC" or "Commission") regulations, the North American Electric Reliability Corporation ("NERC")[3] hereby submits for Commission approval:

- proposed Reliability Standard PRC-005-2 – Protection System[4] Maintenance (**Exhibit B**);
- six new definitions (Protection System Maintenance Program, Unresolved Maintenance Issue, Segment, Component Type, Component, and Countable Event);
- the implementation plan for proposed PRC-005-2 ("Implementation Plan") (**Exhibit C**);
- the Violation Risk Factors ("VRFs") and Violation Severity Levels ("VSLs") for proposed PRC-005-2 (**Exhibit B and Exhibit I**);

NERC also requests the retirement of the following Reliability Standards, effective in accordance with the Implementation Plan:

---

[1] 16 U.S.C. § 824o (2006).
[2] 18 C.F.R. § 39.5 (2012).
[3] The Commission certified NERC as the electric reliability organization ("ERO") in accordance with Section 215 of the FPA on July 20, 2006. *N. Amer. Elec. Reliability Corp.*, 116 FERC ¶ 61,062 (2006).
[4] Capitalized terms used but not defined in this Petition are intended to have the same meaning given to such terms in the *Glossary of Terms Used in NERC Reliability Standards, available at*: http://www.nerc.com/files/Glossary_of_Terms.pdf. ("NERC Glossary")

- PRC-005-1.1b (Transmission and Generation Protection System Maintenance and Testing);
- PRC-008-0 (Implementation and Documentation of Underfrequency Load Shedding Equipment Maintenance Program);
- PRC-011-0 (Undervoltage Load Shedding System Maintenance and Testing); and
- PRC-017-0 (Special Protection System Maintenance and Testing).

As required by Section 39.5(a)[5] of the Commission's regulations, this petition presents the technical basis and purpose of the proposed Reliability Standard, a summary of the development proceedings conducted by NERC for proposed PRC-005-2, and a demonstration that the proposed Reliability Standard meets the criteria identified by the Commission in Order No. 672.[6]

I. EXECUTIVE SUMMARY

NERC currently has four Reliability Standards that are mandatory and enforceable in the United States and Canada that address various aspects of maintenance and testing of protection and control systems. These Reliability Standards are PRC-005-1.1b, PRC-008-0, PRC-011-0, and PRC-017-0. Proposed Reliability Standard PRC-005-2 consolidates these Reliability Standards into a single proposed Reliability Standard. Proposed PRC-005-2 also addresses the directives related to those Reliability Standards issued by the Commission in Order No. 693.[7] The primary purpose of proposed Reliability Standard PRC-005-2 is "[t]o document and implement programs for the maintenance of all Protection Systems affecting the reliability of the

[5] 18 C.F.R. § 39.5(a) (2012).

[6] The Commission specified in Order No. 672 certain general factors it would consider when assessing whether a particular Reliability Standard is just and reasonable. *See Rules Concerning Certification of the Electric Reliability Organization; and Procedures for the Establishment, Approval, and Enforcement of Electric Reliability Standards*, Order No. 672, FERC Stats. & Regs. ¶ 31,204, at P 262, 321 – 37, *order on reh'g*, Order No. 672-A, FERC Stats. & Regs. ¶ 31,212 (2006).

[7] *Mandatory Reliability Standards for the Bulk-Power System*, Order No. 693, FERC Stats. & Regs. ¶ 31,242 ("Order No. 693"), *order on reh'g*, Order No. 693-A, 120 FERC ¶ 61,053 (2007).

Bulk Electric System [], so that these Protection Systems are kept in working order."[8] Proposed PRC-005-2 also:

(i) establishes minimum acceptable maintenance activities and accompanying maximum allowable maintenance intervals, reflecting various technologies of the components being addressed;

(ii) provides Transmission Owners, Generator Owners, and Distribution Providers (together, "Functional Entities") the flexibility to implement condition-based maintenance, by adjusting the minimum acceptable maintenance activities and maximum allowable maintenance intervals to reflect condition monitoring of the various Protection System Components; and

(iii) establishes requirements for effective implementation of performance-based maintenance programs.

The proposed Reliability Standard will improve reliability by: (i) defining and establishing minimum criteria for a Protection System Maintenance Program; (ii) reducing the risk of Protection System Misoperations;[9] (iii) clearly stating the applicability of the Requirements in proposed PRC-005-2 to certain Functional Entities and Facilities; (iv) establishing Requirements for time-based maintenance programs that include maximum allowable maintenance intervals for all relevant devices; and (v) establishing Requirements for condition-based and performance-based maintenance programs where hands-on maintenance intervals are adjusted to reflect the known and reported condition or the historical performance, respectively, of the relevant devices.

---

[8] *See* Exhibit B, proposed Reliability Standard PRC-005-2 "Purpose" statement.

[9] "Misoperations" are (i) any failure of a Protection System element to operate within the specified time when a fault or abnormal condition occurs within a zone of protection; (ii) any operation for a fault not within a zone of protection (other than operation as backup protection for a fault in an adjacent zone that is not cleared within a specified time for the protection for that zone); or (iii) any unintentional Protection System operation when no fault or other abnormal condition has occurred unrelated to on-site maintenance and testing activity. *See* NERC Glossary at 37.

Proposed Reliability Standard PRC-005-2 was approved by the NERC Board of Trustees on November 7, 2012. Implementation for proposed PRC-005-2, as fully explained in **Exhibit A** and in the Implementation Plan attached as **Exhibit C**, will be phased to appropriately balance the reliability benefits to be achieved with the efforts, expense, and requirements associated with implementation of and compliance with the improved proposed Reliability Standard. The Effective Date of proposed PRC-005-2 (*i.e.*, the Implementation Plan) reflects the importance of having in place an improved, unified, and clarified Protection System maintenance Reliability Standard.

II. NOTICES AND COMMUNICATIONS

Notices and communications with respect to this filing may be addressed to the following:[10]

Gerald W. Cauley
President and Chief Executive Officer
North American Electric Reliability Corporation
3353 Peachtree Road, N.E.
Suite 600, North Tower
Atlanta, GA 30326
(404) 446-2560
(404) 446-2595– facsimile

Charles A. Berardesco*
Senior Vice President and General Counsel
Holly A. Hawkins*
Assistant General Counsel
William H. Edwards*
Attorney
North American Electric Reliability Corporation
1325 G Street, N.W., Suite 600
Washington, D.C. 20005
(202) 400-3000
(202) 644-8099– facsimile
charlie.berardesco@nerc.net
holly.hawkins@nerc.net
william.edwards@nerc.net

Counsel for the North American Electric Reliability Corporation

[10] Persons to be included on the Commission's service list are identified by an asterisk. NERC respectfully requests a waiver of Rule 203 of the Commission's regulations, 18 C.F.R. § 385.203 (2012), to allow the inclusion of more than two persons on the service list in this proceeding.

III. BACKGROUND

A. Regulatory Framework

By enacting the Energy Policy Act of 2005,[11] Congress entrusted the Commission with the duties of approving and enforcing rules to ensure the reliability of the Nation's Bulk-Power System, and with the duties of certifying an ERO that would be charged with developing and enforcing mandatory Reliability Standards, subject to Commission approval. Section 215(b)(1)[12] of the FPA states that all users, owners, and operators of the Bulk-Power System in the United States will be subject to Commission-approved Reliability Standards. Section 215(d)(5)[13] of the FPA authorizes the Commission to order the ERO to submit a new or modified Reliability Standard. Section 39.5(a)[14] of the Commission's regulations requires the ERO to file with the Commission for its approval each Reliability Standard that the ERO proposes should become mandatory and enforceable in the United States, and each modification to a Reliability Standard that the ERO proposes should be made effective.

The Commission has the regulatory responsibility to approve Reliability Standards that protect the reliability of the Bulk-Power System and to ensure that such Reliability Standards are just, reasonable, not unduly discriminatory or preferential, and in the public interest. Pursuant to Section 215(d)(2) of the FPA[15] and Section 39.5(c)[16] of the Commission's regulations, the Commission will give due weight to the technical expertise of the ERO with respect to the content of a Reliability Standard.

---

[11] 16 U.S.C. § 824o (2006).
[12] *Id.* § 824(b)(1).
[13] *Id.* § 824o(d)(5).
[14] 18 C.F.R. § 39.5(a) (2012).
[15] 16 U.S.C. § 824o(d)(2).
[16] 18 C.F.R. § 39.5(c)(1).

B. History of PRC-005 and Project 2007-17

With the development of the proposed PRC-005-2 Reliability Standard, the standard drafting team for Project 2007-17 – Protection System Maintenance has followed the observations and recommendations of the NERC System Protection and Control Task Force ("SPCTF") in its assessment of PRC-005-1, PRC-008-0, PRC-011-0, and PRC-017-0 ("Assessment).[17] As discussed below, Project 2007-17 – Protection System Maintenance and Testing also addresses the Commission's directives from Order No. 693 related to PRC-005-1, PRC-008-0, PRC-011-0, and PRC-017-0. To provide context for the approval of proposed PRC-005-2, this section includes a brief summary of the history of PRC-005 and the Reliability Standards proposed for retirement and a summary of the observations of the NERC SPCTF.

1. PRC-005 and Related Reliability Standards

The Commission approved Reliability Standard PRC-005-1 in Order No. 693[18] and directed NERC "to develop a modification … through the Reliability Standards development process that includes a requirement that maintenance and testing of a protection system must be carried out within a maximum allowable interval that is appropriate to the type of the protection system and its impact on the reliability of the Bulk-Power System."[19] The Commission also

---

[17] NERC, *NERC SPCTF Assessment of Standards: PRC-005-1 — Transmission and Generation Protection System Maintenance and Testing, PRC-008-0 — Underfrequency Load Shedding Equipment Maintenance Programs, PRC-011-0 — UVLS System Maintenance and Testing, PRC-017-0 — Special Protection System Maintenance and Testing*, Mar. 8, 2007, *available at* http://www.nerc.com/docs/standards/sar/PRC-005-008-011-017_Report_Approved_by_PC.pdf. ("SPCTF Assessment"). A supplement to the Assessment was also considered. NERC, *NERC SPCTF Supplemental Assessment Addressing FERC Order 693 Relative toPRC-005-1 — Transmission and Generation Protection System Maintenance and Testing, PRC-008-0 — Underfrequency Load Shedding Equipment Maintenance Programs, PRC-011-0 — UVLS System Maintenance and Testing, PRC-017-0 — Special Protection System Maintenance and Testing*, May 17, 2007, *available at* http://www.nerc.com/docs/pc/spctf/Supplemental_Report_on_PRC-005-008-011-017_Approved_by_PC_2.pdf.

[18] Order No. 693at P 1475.

[19] *Id.*

directed NERC to consider suggestions made by commenters to "combine PRC-005, PRC-008, PRC-011, and PRC-017 into a single Reliability Standard."[20]

Since Order No. 693, and during the time in which PRC-005-2 has been under development, two interpretations of PRC-005-1 have been filed with and approved by the Commission. In September 2011, the Commission approved NERC's interpretation of "transmission Protection System" as it appears in PRC-005-1, Requirements R1 and R2 (PRC-005-1a).[21] A second interpretation of Requirement R1 was accepted in Order No. 758[22] (PRC-005-1b). The second interpretation included five questions, each with a NERC response. As part of its acceptance of the interpretation in Order No. 758, the Commission accepted NERC's commitments to address through the Reliability Standards development process concerns raised with respect to the Protection System maintenance and testing Reliability Standard during the Order No. 758 rulemaking process. The Commission also directed that concerns raised with respect to reclosing relays be addressed within the reinitiated PRC-005 revisions.[23]

On March 30, 2011, NERC submitted a petition for Commission approval of a proposed modification to the definition of "Protection System" to close a reliability gap created by an omission in the currently-approved definition. The Commission approved the modified definition, which is referenced in proposed PRC-005-2.[24] On July 30, 2012, and in response to a directive in Order No. 758, NERC submitted an informational filing to report to the Commission that proposed PRC-005-2 was in the final stages of the development process, and revisions to

---

[20] *Id.* ("We further direct the ERO to consider FirstEnergy's and ISO-NE's suggestion to combine PRC-005-1, PRC-008-0, PRC-011-0 and PRC-017-0 into a single Reliability Standard through the Reliability Standards development process.").

[21] *N. Am. Elec. Reliability Corp.*, 136 FERC ¶ 61,208, P 11 (2011). The interpretation interpreted "transmission Protection System" to mean "any Protection System that is installed for the purpose of detecting faults on transmission elements (lines, buses, transformers, etc.) identified as being included in the Bulk Electric System [] and trips an interrupting device that interrupts current supplied directly from the [Bulk Electric System]."

[22] *Interpretation of Protection System Reliability Standard*, Order No. 758, 138 FERC ¶ 61,094 (2012).

[23] *Id.* at P 11, 27.

[24] *See N. Am. Elec. Reliability Corp.*, 138 FERC ¶ 61,095 (2012).

address the issues around the maintenance and testing of reclosing relays identified in the Order No. 758 proceeding had been authorized for development and would be addressed in a subsequent submission.[25]

In Order No. 693, the Commission also approved PRC-008-0 (Implementation and Documentation of Underfrequency Load Shedding Equipment Maintenance Program), PRC-011-0 (Undervoltage Load Shedding System Maintenance and Testing), and PRC-017-0 (Special Protection System Maintenance and Testing). Similar directives to those for PRC-005-1 were issued for PRC-008,[26] PRC-011,[27] and PRC-017.[28] No changes to, or interpretations of these Version 0 Reliability Standards have been submitted since approval.

2. NERC System Protection and Control Task Force

In a March 8, 2007 Assessment, the NERC SPCTF determined that the existing PRC-005-1, PRC-008-0, PRC-011-0, and PRC-017-0 Reliability Standards contain several fundamental flaws. In its Assessment, the group recommended that these four Reliability Standards be reduced to one Reliability Standard. The SPCTF concluded that for all four Reliability Standards: (1) the Requirements do not provide clear and sufficient guidance concerning the maintenance and testing of the Protection Systems to achieve the commonly stated purpose "[t]o ensure all transmission and generation Protection Systems affecting the reliability of the Bulk Electric System [] are maintained and tested"; (2) the Standards should

---

[25] NERC Jul. 30, 2012 Informational Filing in Compliance with Order No. 758, Docket No. RM10-5. *See also* NERC Project 2007-17 Protection System Maintenance - Phase 2 (Reclosing Relays), *available at* http://www.nerc.com/filez/standards/Project_2007-17.2_Protection_System_Maintenance_and_Testing_Phase_2_Reclosing_Relays.html.

[26] Order No. 693 at P 1492.

[27] *Id.* at P 1516.

[28] *Id.* at P 1546.

clearly state which power system elements are being addressed; and (3) the Requirements should reflect the inherent differences between different technologies of Protection Systems.[29]

IV. JUSTIFICATION FOR APPROVAL

A. Basis for Approval and Purpose of Proposed PRC-005-2

As discussed in detail in **Exhibit A**, proposed Reliability Standard PRC-005-2 satisfies the Commission's criteria in Order No. 672 and is just, reasonable, not unduly discriminatory or preferential, and in the public interest. Proposed PRC-005-2 meets the Commission's directives related to PRC-005-1 and the directives for the Reliability Standards proposed for retirement from Order No. 693.[30] The proposed Reliability Standard also effectively combines the reliability objectives of PRC-005, PRC-008, PRC-011, and PRC-017, into one Reliability Standard. The improved proposed Reliability Standard protects reliability and creates increased efficiency within the PRC-series of Reliability Standards by combining Reliability Standards with similar reliability objectives.

The proposed PRC-005-2 Reliability Standard establishes Requirements for a time-based maintenance program, where all relevant devices are maintained according to prescribed maximum intervals. It also establishes Requirements for a condition-based maintenance program, where the hands-on maintenance intervals are adjusted to reflect the known and reported condition of the relevant devices. For a performance-based maintenance program, the hands-on maintenance intervals are adjusted to reflect the historical performance of the relevant devices. Proposed PRC-005-2 also provides a comprehensive set of Requirements that define a strong Protection Systems Maintenance Program. As a complement to the Requirements, the

---

[29] SPCTF Assessment at 2.

[30] Commission directives issued subsequent to Order No. 693 address additional requirements for maintenance and testing of reclosing relays and of sudden-pressure relays in addition to other mechanical protective devices. NERC plans to address these directives in subsequent phases or projects.

proposed PRC-005-2 Reliability Standard also includes detailed tables of minimum maintenance activities and maximum maintenance intervals for all five component types addressed within the NERC definition of Protection System. Functional Entities that monitor the actual condition of their Protection System components are further empowered to utilize monitoring to improve the efficiency and effectiveness of their Protection Systems Maintenance Program, and, with the benefit of extensive Protection System performance data, to utilize that performance data to further improve the efficiency and effectiveness of their Protection Systems Maintenance Program.

The standard drafting team authored a number of technical documents included as Exhibits to this petition, which provide detailed analysis of the proposed Reliability Standard and answers to frequently asked questions regarding Protection Systems. A technical justification document addressing the Requirements for proposed PRC-005-2 is included as **Exhibit D**, a "Supplementary Reference and FAQ" document is included as **Exhibit E**, and finally a technical justification document explaining the maintenance intervals in Tables 1, 2 & 3 of proposed PRC-005-2 is included as **Exhibit F**, and finally, which contains descriptive, technical information supporting the standard drafting team's rationale and decisions for the Requirements and associated tables. The "Supplementary Reference and FAQ" document was posted concurrently with the Reliability Standard during each posting and will be linked with the proposed PRC-005-2 Reliability Standard following approval. A mapping document is also included as **Exhibit G** explaining the translation of objectives from the proposed Reliability Standards for retirement into proposed PRC-005-2.

1. Improvements Reflected in Proposed PRC-005-2

Proposed PRC-005-2 includes five Requirements, discussed below, which present a comprehensive approach to documenting and implementing programs for the maintenance of all Protection Systems affecting the reliability of the Bulk Electric System so that these Protection Systems are kept in working order. The proposed Reliability Standard applies to Transmission Owners, Generator Owners, and Distribution Providers[31] and to certain Facilities.[32] It also centralizes and defines in one Reliability Standard, a Protection System Maintenance Program that includes Transmission and Generation Protection Systems, Underfrequency Load Shedding systems, Undervoltage Load Shedding systems, and Special Protection Systems, and also establishes minimum criteria for that Protection System Maintenance Program. Further, the proposed Reliability Standard reduces the risk of Protection System Misoperations by applying consistent, best practice maintenance and inspection activities of Protections System Components performed in accordance with the maximum intervals established in the proposed Reliability Standard.

This approach represents an improvement over PRC-005-1 and the three Reliability Standards proposed for retirement because, unlike proposed PRC-005-2, these Reliability Standards do not contain details outlining the technical requirements for Protection System Maintenance Programs. While these Reliability Standards require that applicable entities have a maintenance program for Protection Systems, and that entities must be able to demonstrate they are carrying out such a program, the Reliability Standards do not contain the technical requirements for Protection System Maintenance Programs.

---

[31] Proposed Reliability Standard PRC-005-2, section A.4, part 4.1.

[32] Proposed Reliability Standard PRC-005-2, section A.4, part 4.2.

2. Commission Directives

Proposed PRC-005-2 meets the Commission directives from Order No. 693 with respect to: (1) including maximum allowable intervals in PRC-005; (2) combining PRC-005, PRC-008, PRC-011, and PRC-017; and (3) considering whether Load Serving Entities and Transmission Operators should be included in the applicability of the PRC-005 Reliability Standard. While Additional directives related to the PRC-005 Reliability Standard were issued by the Commission in a subsequent Order, Order No. 758,[33] these directives are being addressed in future projects related to PRC-005.

a) Maximum Allowable Intervals

In Order No. 693, the Commission directed NERC to revise PRC-005-1 to include a Requirement that maintenance and testing of a protection system must be carried out within a maximum allowable interval that is appropriate to the type of the protection system and its impact on the reliability of the Bulk-Power System.[34] In response, proposed PRC-005-2 includes specific maximum allowable intervals within Tables 1-1 through 1-5, Table 2 and Table 3 for time-based programs. Additionally, a Requirement allowing performance-based maintenance intervals was added.

b) Combining PRC-005, PRC-008, PRC-011, and PRC-017

In Order No. 693, the Commission also directed the ERO to consider FirstEnergy's and ISO-NE's suggestion to combine PRC-005-1, PRC-008-0, PRC-011-0 and PRC-017-0 into a single Reliability Standard through the Reliability Standards development process.[35] The NERC SPCTF's Assessment also suggested combining the Reliability Standards. In response, NERC

---

[33] Order No. 758 at P 11, 27.
[34] Order No. 693 at P 1475.
[35] *Id.*

has combined the Reliability Standards into the proposed PRC-005-2. As noted above, a mapping document is provided as **Exhibit G** explaining the translation of objectives from the proposed Reliability Standards for retirement into proposed PRC-005-2. NERC also notes that similar directives to those for PRC-005-1 in Order No. 693 were issued for PRC-008,[36] PRC-011,[37] and PRC-017[38] and are similarly addressed by the proposed Reliability Standard with the exception of a directive to develop a modification to PRC-017-0 regarding the documentation of the actual Special Protection Systems.[39] This directive is being addressed in an upcoming NERC Project 2010-05.2, which includes in its scope PRC-012-0 and other Special Protection System Reliability Standards.

c) Applicability of Proposed PRC-005-2 to Load Serving Entities and Transmission Operators

Lastly, the Commission directed NERC to consider whether Load Serving Entities and Transmission Operators should be included in the applicability of the PRC-004 Reliability Standard.[40] In a footnote, the Commission directed NERC to consider the same directive for other Reliability Standards including PRC-005-1, PRC-008-0, PRC-011-0, and PRC-017-0.[41] NERC considered the suggested changes to the applicability section of the proposed PRC-005-2 Reliability Standard, but determined that proposed PRC-005-2 should be applicable to the equipment owners. While an equipment owner may need to coordinate with the operating entities in order to schedule the actual maintenance, the responsibility resides with the equipment owners to complete the required maintenance.

---

36 *Id.* at P 1492.
37 *Id.* at P 1516.
38 *Id.* at P 1546.
39 Order No. 693 at P 1545.
40 *Id.* at P 1469.
41 *Id.* at n. 384.

3. Requirements in Proposed PRC-005-2

As noted above, proposed PRC-005-2 establishes Requirements for: (1) time-based maintenance programs that include maximum allowable maintenance intervals for all relevant devices; (2) condition-based maintenance programs where hands-on maintenance intervals are adjusted to reflect the known and reported condition of the relevant devices; and (3) performance-based maintenance programs where hands-on maintenance intervals are adjusted to reflect the historical performance of the relevant devices.

Proposed PRC-005-2 also introduces six new definitions. With the exception of the definition for "Protection System Maintenance Program", the newly defined terms are intended for use solely in proposed PRC-005-2 and therefore will not be located in the NERC Glossary of Terms. These "local" definitions are found in the proposed PRC-005-2 Reliability Standard in stand-alone text boxes. The definitions proposed for approval are as follows:

> **Protection System Maintenance Program** – An ongoing program by which Protection System components are kept in working order and proper operation of malfunctioning components is restored. A maintenance program for a specific component includes one or more of the following activities:
>
> - Verify – Determine that the component is functioning correctly.
> - Monitor – Observe the routine in-service operation of the component.
> - Test – Apply signals to a component to observe functional performance or output behavior, or to diagnose problems.
> - Inspect – Examine for signs of component failure, reduced performance or degradation.
> - Calibrate – Adjust the operating threshold or measurement accuracy of a measuring element to meet the intended performance requirement.
>
> **Unresolved Maintenance Issue** – A deficiency identified during a maintenance activity that causes the component to not meet the intended performance, cannot be corrected during the maintenance interval, and requires follow-up corrective action.

Segment – Protection Systems or components of a consistent design standard, or a particular model or type from a single manufacturer that typically share other common elements. Consistent performance is expected across the entire population of a Segment. A Segment must contain at least sixty (60) individual components.

Component Type – Any one of the five specific elements of the Protection System definition.

Component – A Component is any individual discrete piece of equipment included in a Protection System, including but not limited to a protective relay or current sensing device. The designation of what constitutes a control circuit Component is dependent upon how an entity performs and tracks the testing of the control circuitry. Some entities test their control circuits on a breaker basis whereas others test their circuitry on a local zone of protection basis. Thus, entities are allowed the latitude to designate their own definitions of control circuit Components. Another example of where the entity has some discretion on determining what constitutes a single Component is the voltage and current sensing devices, where the entity may choose either to designate a full three-phase set of such devices or a single device as a single Component.

Countable Event – A failure of a Component requiring repair or replacement, any condition discovered during the maintenance activities in Tables 1-1 through 1-5 and Table 3 which requires corrective action or a Misoperation attributed to hardware failure or calibration failure. Misoperations due to product design errors, software errors, relay settings different from specified settings, Protection System Component configuration errors, or Protection System application errors are not included in Countable Events.

These new definitions are referenced throughout the Requirements of proposed PRC-005-2.

Proposed PRC-005-2 includes the following Requirements:[42]

[42] A full technical justification for the Requirements of proposed PRC-005-2 is included in **Exhibit D**.

a) Requirement R1

R1. Each Transmission Owner, Generator Owner, and Distribution Provider shall establish a Protection System Maintenance Program (PSMP) for its Protection Systems identified in Section 4.2. *[Violation Risk Factor: Medium] [Time Horizon: Operations Planning]*

> **R1.1.** Identify which maintenance method (time-based, performance-based per PRC-005 Attachment A, or a combination) is used to address each Protection System Component Type. All batteries associated with the station dc supply Component Type of a Protection System shall be included in a time-based program as described in Table 1-4 and Table 3.
>
> **R1.2.** Include the applicable monitored Component attributes applied to each Protection System Component Type consistent with the maintenance intervals specified in Tables 1-1 through 1-5, Table 2, and Table 3 where monitoring is used to extend the maintenance intervals beyond those specified for unmonitored Protection System Components.

Establishment of a Protection System Maintenance Program, as directed by Requirement R1, is needed to detect and correct plausible age- and service-related degradation of Protection System components. It is important that a Protection System continue to function as designed over its service life to ensure reliability of the Bulk Electric System. Requirement R1 establishes the obligation of a Functional Entity to establish a Protection System Maintenance Program for its Protection Systems. Requirement R1 combines the reliability goals of developing detailed tables of minimum maintenance activities and maximum maintenance intervals for all five Protection System Component Types. These tables include adjustments to those minimum maintenance activities and maximum maintenance intervals to reflect the benefits of any condition monitoring that may be present.

b) Requirement R2

R2. Each Transmission Owner, Generator Owner, and Distribution Provider that uses performance-based maintenance intervals in its PSMP shall follow the procedure established in PRC-005 Attachment A to establish and maintain its performance-based intervals. *[Violation Risk Factor: Medium] [Time Horizon: Operations Planning]*

Requirement R2 addresses performance-based maintenance intervals. The Requirement includes a reference to Attachment A to proposed PRC-005-2, which contains criteria for a performance-based Protection System Maintenance Program. A technical justification for each of the criteria is included in **Exhibit D**. The criteria within Attachment A are largely based on application of statistical analysis theory. Performance-based maintenance is included in proposed PRC-005-2 to allow utilities to adjust maintenance intervals based on their individual experience with equipment types and manufacturers.

c) Requirement R3

> **R3.** Each Transmission Owner, Generator Owner, and Distribution Provider that utilizes time-based maintenance program(s) shall maintain its Protection System Components that are included within the time-based maintenance program in accordance with the minimum maintenance activities and maximum maintenance intervals prescribed within Tables 1-1 through 1-5, Table 2, and Table 3. *[Violation Risk Factor: High] [Time Horizon: Operations Planning]*

Requirement R3 requires the implementation of the minimum maintenance activities and maximum allowable maintenance intervals in Requirement R1 and the tables within the proposed Reliability Standard. The proper performance of Protection Systems is fundamental to the reliability of the Bulk Electric System and proper performance of Protection Systems cannot be assured without periodic maintenance of those systems.

d) Requirement R4

> **R4.** Each Transmission Owner, Generator Owner, and Distribution Provider that utilizes performance-based maintenance program(s) in accordance with Requirement R2 shall implement and follow its PSMP for its Protection System Components that are included within the performance-based program(s). *[Violation Risk Factor: High] [Time Horizon: Operations Planning]*

For the same reliability reason as Requirement R3, Requirement R4 requires the implementation of an entity's Protection System Maintenance Program established pursuant to Requirement R2.

e) Requirement R5

> **R5.** Each Transmission Owner, Generator Owner, and Distribution Provider shall demonstrate efforts to correct identified Unresolved Maintenance Issues.
> *[Violation Risk Factor: Medium] [Time Horizon: Operations Planning]*

The reliability objective of this Requirement is to assure that Protection System components are returned to working order following the discovery of failures or malfunctions during scheduled maintenance. The maintenance activities specified in the Tables 1-1 through 1-5, Table 2, and Table 3 do not present any requirements related to restoration; therefore, Requirement R5 of the proposed Reliability Standard was developed to require the entity to "demonstrate efforts to correct identified Unresolved Maintenance Issues."

B. Enforceability of Proposed PRC-005-2

The proposed PRC-005-2 Reliability Standard contains Measures that support each Requirement by clearly identifying what is required and how the Requirement will be enforced. The Implementation Plan also discusses the documentation necessary during transition to proposed PRC-005-2. The VSLs provide further guidance on the way that NERC will enforce the Requirements of the proposed Reliability Standard. The VRFs and VSLs for the proposed PRC-005-2 Reliability Standard comport with NERC and Commission guidelines related to their assignment. For a detailed review of the VRFs, the VSLs, and the analysis of how the VRFs and VSLs were determined using these guidelines, see **Exhibit I**. The VSLs have been developed based on the situations an auditor may encounter during a compliance audit.

V. SUMMARY OF RELIABILITY STANDARD DEVELOPMENT PROCEEDINGS

The extensive development record for proposed Reliability Standard PRC-005-2 is summarized below. **Exhibit H** contains the Consideration of Comments Reports created during the development of the proposed Reliability Standard. **Exhibit J** contains the complete record of development for the proposed Reliability Standard.

A. Overview of the Standard Drafting Team

When evaluating modified Reliability Standards, the Commission must give "due weight" to the technical expertise of the ERO.[43] The technical expertise of the ERO is derived from the standard drafting team. For this project, the standard drafting team consisted of 24 industry experts with substantial, robust, and distinguished industry experience across North America, including both the continental United States and Canada. Standard drafting team members had, on average, more than 27 years' industry experience, with only five reporting less than 20 years' industry experience. The standard drafting team included experts in all facets of protection systems and Underfrequency Load Shedding and Undervoltage Load Shedding equipment engineering, operations, maintenance, and compliance. A standard drafting team roster including member biographical information is included in **Exhibit K**.

B. Proposed PRC-005-2 Development History

1. PRC-005-2 Development – Standard Authorization Request

Project 2007-17 (Protection System Maintenance and Testing) was initiated on May 7, 2007 by a Standard Authorization Request ("SAR") in response to Order No. 693, stakeholder issues raised during the development of the "Version 0" Reliability Standards, and the SPCTF Assessment. The Project 2007-17 SAR was posted for a 30-day public comment period from June 11 through July 10, 2007. Stakeholders submitted 18 sets of comments, including

[43] *See* 16 U.S.C. § 824o(d)(2) (2006).

comments from 85 different individuals representing more than 50 companies covering 8 of the 10 industry segments. Based on the comments received, no changes to the SAR were made by the SAR drafting team, and the SAR was authorized to proceed to the standard drafting stage of the standards development process.

a) First Posting – Informal Comment Period

Proposed PRC-005-2 was first posted for a comment period from July 24, 2009 through September 8, 2009. NERC received 57 sets of comments from more than 130 different individuals, including 75 companies and representing all of the 10 industry segments. Commenters provided feedback on the proposed Reliability Standard and on the accompanying "Supplementary Reference" and "Frequently Asked Questions" documents circulated with the proposed Reliability Standard. In response to the comments received, the standard drafting team materially revised the proposed Reliability Standard and the accompanying documents, including:

- the name of the proposed Reliability Standard to its current name – "Protection System Maintenance";
- the proposed Reliability Standard and tables addressing covered maintenance activities and associated maintenance intervals;
- the tables to improve clarity and address identified administrative concerns with condition-based and performance-based maintenance programs; and
- other clarifying changes to the proposed Reliability Standard, "Frequently Asked Questions" document, the "Supplementary Reference" document, and minor changes to the draft Implementation Plan.

b) Second Posting – Formal Comment Period and Initial Ballot

To support the prioritization of this project in response to Commission's concerns over the lack of progress in meeting the directives from Order No. 693, the NERC Standards Committee approved several deviations from the standards development process.[44] In accordance with the deviations, a second draft of PRC-005-2 was posted for a 35-day public comment period (from June 11 through July 16, 2010) and subject to an initial ballot (from July 8 through July 17, 2010). The second draft reflected the revisions identified in Section B.1.(a) above, as well as VRFs, Time Horizons, Measures, and Compliance elements, including VSLs. NERC received 58 sets of comments from more than 130 different individuals, including 70 companies and representing 8 of the 10 industry segments. Commenters provided feedback on the maximum allowable intervals, the individual activities and intervals within the tables in the proposed Reliability Standard, the VRF and VSL assignments, Measures, Time Horizons, and the "Supplementary Reference" and "FAQs" documents. The first ballot was not approved, with 22.91% voting to approve after re-balloting.

In response to the comments received, the standard drafting team made a number of changes to the proposed Reliability Standard. The standard drafting team rearranged and revised the tables, to create one table for each of the five Protection System component types, as well as a sixth table to address monitoring and alarming requirements to support extended intervals for monitored Protection System components. The standard drafting team made several modifications to the VRFs and VSLs, and revised the Time Horizons for both R3 and R4 from "Long-Term Planning" to "Operations Planning". All four Measures were changed in response

[44] *See* Standards Announcement, *available at* http://www.nerc.com/docs/standards/sar/PSMTinfo_document061110.pdf (requiring changes to the proposed standard and definition be posted for 35-day comment periods (rather than 45-day comment periods); ballot pools to be formed during the first 21 days of the 35-day comment periods; and initial ballots be conducted during the last 10 days of the 35-day comment periods).

to commenters' suggestions. Last, a number of definitions, previously included only in the Reference Documents, were added to the proposed Reliability Standard.

c) Third Posting – Formal Comment Period and Successive Ballot

A third draft of proposed PRC-005-2 was posted for a public 30-day formal comment period (from November 17 through December 17, 2010) and subject to a successive ballot (from December 10 through December 20, 2010). The third draft reflected the revisions identified in Section B.1.(b). NERC received 44 sets of comments from more than 80 different individuals, including 82 companies and representing 9 of the 10 industry segments. Commenters provided feedback on the various Requirements in the proposed Reliability Standard, with feedback on the rearrangement of the table generally positive, and objections raised with respect to the percentage steps in several VSLs, notwithstanding their consistency with NERC's VSL guidelines. The ballot was not approved, with 44.65% voting to approve.

In response to the comments received, the standard drafting team made extensive changes to the proposed Reliability Standard's Requirements, including: removing a Requirement that addressed calibration tolerances and a Requirement determined to be redundant; combined the "Frequently Asked Questions" and "Supplementary Reference" documents; split Table 1-4; addressed maintenance of station DC supply; and revised the Implementation Plan.

d) Fourth Posting – Formal Comment Period and Successive Ballot

A fourth draft of proposed PRC-005-2 was posted for a public 30-day formal comment period (from April 12 through May 13, 2011) and subject to a successive ballot (from May 3 through May 13, 2011). The fourth draft reflected the revisions identified in Section B.1.(c). NERC received 55 sets of comments from more than 176 different individuals, including

103companies and representing all of the 10 industry segments. The ballot achieved 67% and moved to recirculation ballot. In response to the comments received on the fourth draft, the standard drafting team clarified Requirement R1 and the tables, lengthened certain implementation periods for Functional Entities not subject to regulatory approvals, revised the VSLs, addressed comments regarding the definition of "Maintenance Correctable Issues," and supplemented the "Supplementary Reference and FAQ" document.

e) Fifth Posting and Ballot

A fifth draft of PRC-005-2 was posted for a recirculation ballot and non-binding poll from June 20 through June 30, 2011. The ballot was not approved, with only 64.76% voting to approve.

2. PRC-005-2 Development – Reauthorization

On August 11, 2011, with a revised SAR, the NERC Standards Committee re-authorized Project 2007-17 and substantially modified the proposed PRC-005-2 Reliability Standard ("Reauthorization").[45] The second SAR included several changes made by the standard drafting team to the original SAR. The title of the proposed Reliability Standard was changed to "Protection System Maintenance"; reliability principle item #4 was deemed inapplicable and removed; and the "Transmission and Generation" descriptor of Protection Systems was removed from the "Detailed Description" area of the second SAR.

a) First Posting – Formal Comment Period and Initial Ballot

A first draft of proposed PRC-005-2 following the Reauthorization was posted for a public 45-day formal comment period (from August 15 through September 29, 2011) and subject

[45] *See* NERC, Standards Committee Meeting Minutes, Aug. 11, 2011, *available* at http://www.nerc.com/docs/standards/sc/sc_081111_approved_package.pdf.

to an initial ballot (from September 19 through September 29, 2011). The first draft reflected revisions made since the fifth posting described in Section B.1.(e), including:

- renaming "Maintenance Correctable Issue" to "Unresolved Maintenance Issue";
- revising the interval for various station dc supply and communications system maintenance activities from three to four calendar months;
- moving the maintenance activities and intervals for distributed Underfrequency Load Shedding and Undervoltage Load Shedding systems from Tables 1-1 through 1-5 into a new Table 3, to separately illustrate the requirements related to these systems;
- revising the Implementation Plan; and
- modifying the VSLs, VRFs, and "Supplementary Reference and FAQ" document to reflect the listed changes and to respond to additional stakeholder comments received.

NERC received 48 sets of comments from more than 147 different individuals, including 98 companies and representing 9 of the 10 industry segments. The first ballot was not approved, with only 61.10% voting to approve. In response to the comments received, the standard drafting team revised the applicability of the proposed Reliability Standard to indicate that, for generator-connected station service transformers, only the Protection Systems that trip the generator, either directly or via a lockout relay, are included in the proposed Reliability Standard. The standard drafting team also revised the Requirements and Measures associated with those Requirements, clarified the Tables and the Implementation Plan, and modified the VSLs.

b) Second Posting – Formal Comment Period and Successive Ballot

A second draft of proposed PRC-005-2 was posted for a public 30-day formal comment period (from February 28 through March 28, 2012) and subject to a successive ballot and non-binding poll (from March 19 through March 28, 2012). The second draft reflected a Revised

Requirement R1, which stated that a Functional Entity's Protection System Maintenance Program must include for each Protection System component type an identification of the maintenance method(s) used, and the identification of the relevant monitoring attributes applied. In addition, Requirement R3 was split into three Requirements (a revised R3 and new R4 and R5), and the VSLs and the "Supplementary Reference and FAQ" document was revised to reflect the changes and additional stakeholder comments. NERC received 56 sets of comments from more than 118 different individuals, including 98 companies and representing 9 of the 10 industry segments. The successive ballot received a 73.93% weighted segment vote and the standard drafting team indicated it would consider the stakeholder comments submitted.

In response to the comments received, the standard drafting team revised the "Inspect" element of the definition of Protection System Maintenance Program, clarified the definitions of "Unresolved Maintenance Issue" and "Countable Event," revised the "Applicability" section or the proposed Reliability Standard in part 4.2.5.4, revised the first and last rows of Table 1-2, and, with the assistance of the IEEE stationary battery committee, revised several other Tables with respect to the verification that a station battery can perform properly. Clarifying, conforming, and correcting changes were also made to the Requirements, Measures, VSLs, and the Supplementary Reference Document.

c) Third Posting – Formal Comment Period and Successive Ballot

A third draft of proposed PRC-005-2 was posted for a public 30-day formal comment period (from May 29 through June 27, 2012) and subject to a successive ballot (from June 18 through June 27, 2012). The third draft reflected the revisions identified in Section B.2.(b). NERC received 51 sets of comments from more than 170 different individuals, including 110 companies and representing all 10 industry segments. The successive ballot received a 79%

weighted segment vote and the standard drafting team indicated it would consider the stakeholder comments submitted.

In response to the comments received on the third draft, the standard drafting team made minimal changes to the proposed Reliability Standard. Those changes included: changes to the Tables, Implementation Plan; "Supplementary Reference and FAQ" document; and clarifying changes to the mapping document.

d) Fourth Posting – Formal Comment Period and Successive Ballot

A fourth draft of proposed PRC-005-2 was posted for a public 30-day formal comment period (from July 27 through August 27, 2012) and subject to a successive ballot (from August 17 through August 27, 2012). As noted in Section B.2.(b), the fourth draft reflects minor changes to the Tables, along with changes to the Implementation Plan, mapping document and "Supplementary Reference and FAQ" document. NERC received 36 sets of comments from more than 102 different individuals, including 65 companies and representing 9 of the 10 industry segments. The successive ballot received an 80.31% weighted segment vote and the standard drafting team indicated it would consider the stakeholder comments submitted.

In response to the comments received on the fourth draft, the standard drafting team made editorial changes to the proposed Reliability Standard. For example, Table 1-2 was revised such that "communications" would be plural in all occurrences of "communications systems," "identify" was added to the VSLs for Requirement R5, and grammatical and punctuation corrections were made to the "Supplementary Reference and FAQ" document.

e) Final Posting – Recirculation Ballot

Because the comments on the fourth draft did not require substantive revisions, proposed PRC-005-2 proceeded to a recirculation ballot (from October 15 through October 24, 2012). The

recirculation ballot was ultimately approved, with 80.51% of the weighted segment vote voting to approve proposed PRC-005-2.

f) Board of Trustees Approval

NERC presented the final draft of the proposed PRC-005-2 Reliability Standard to NERC's Board of Trustees for approval on November 7, 2012. The Board of Trustees approved the proposed Reliability Standard, and NERC staff recommended that it be filed with Applicable Regulatory Authorities.

VI. CONCLUSION

Proposed Reliability Standard PRC-005-2 should be approved because it supports the important reliability goal of reducing Misoperations by requiring that owners of Protection Systems perform specific maintenance activities for specific protection system components within defined intervals. In addition, the effectiveness of compliance by Functional Entities with the proposed PRC-005-2 Reliability Standard will be enhanced by the consolidation of Reliability Standards PRC-005-1.1b, PRC-008-0, PRC-011-0, and PRC-017-0 into a single Reliability Standard. Finally, proposed PRC-005-2 responds to outstanding directives set forth in Order No. 693, as described herein. Accordingly, and for the reasons set forth above, NERC respectfully requests that the Commission find that proposed Reliability Standard PRC-005-2 is just, reasonable, not unduly discriminatory or preferential, and in the public interest and approve proposed PRC-005-2 as filed in **Exhibit B.** NERC also requests that the Commission approve the associated Implementation Plan included as **Exhibit C**, and the VRFs and VSLs for proposed Reliability Standard PRC-005-2. Finally, NERC requests approval of the retirement of the PRC-005-1.1b, PRC-008-0, PRC-011-0, PRC-017-0 effective according to the Implementation Plan.

Respectfully submitted,

/s/ William H. Edwards

Gerald W. Cauley
President and Chief Executive Officer
North American Electric Reliability
Corporation
3353 Peachtree Road, N.E.
Suite 600, North Tower
Atlanta, GA 30326
(404) 446-2560
(404) 446-2595– facsimile

Charles A. Berardesco
Senior Vice President and General Counsel
Holly A. Hawkins
Assistant General Counsel
William H. Edwards
Attorney
North American Electric Reliability
Corporation
1325 G Street, N.W., Suite 600
Washington, D.C. 20005
(202) 400-3000
(202) 644-8099– facsimile
charlie.berardesco@nerc.net
holly.hawkins@nerc.net
william.edwards@nerc.net

Counsel for the North American Electric Reliability Corporation

February 26, 2013

CERTIFICATE OF SERVICE

I hereby certify that I have served a copy of the foregoing document upon all parties listed on the official service list compiled by the Secretary in this proceeding. Dated at Washington, D.C. this 26th day of February, 2013.

/s/ William H. Edwards

William H. Edwards
Attorney for North American Electric Reliability Corporation

Exhibit A

Order No. 672 Criteria

EXHIBIT A

Order No. 672 Criteria for Reliability Standard PRC-005-2

In Order No. 672,[1] the Commission identified a number of criteria it will use to analyze Reliability Standards proposed for approval to ensure they are just, reasonable, not unduly discriminatory or preferential, and in the public interest. The discussion below identifies these factors and explains how the proposed Reliability Standard has met or exceeded the criteria:

1. **Proposed Reliability Standards must be designed to achieve a specified reliability goal and must contain a technically sound means to achieve that goal.**[2]

Proposed PRC-005-2 achieves the specific reliability goal of maintaining the proper working order of Protection Systems. The proposed Standard achieves this goal by requiring that applicable entities establish, implement, and document comprehensive Protection System Maintenance Programs in accordance with the Requirements, Tables, and Attachment included in the proposed Standard. By outlining the documentation and implementation of programs for the maintenance of all Protection Systems affecting the reliability of the Bulk Electric System, Protection Systems are kept in working order. Performance of these programs, applied consistently throughout the North American Bulk-Power System and assured through the

---

[1] *Rules Concerning Certification of the Electric Reliability Organization; and Procedures for the Establishment, Approval, and Enforcement of Electric Reliability Standards*, Order No. 672, FERC Stats. & Regs. ¶ 31,204, *order on reh'g*, Order No. 672-A, FERC Stats. & Regs. ¶ 31,212 (2006).

[2] Order No. 672 at P 321. The proposed Reliability Standard must address a reliability concern that falls within the requirements of section 215 of the FPA. That is, it must provide for the reliable operation of Bulk-Power System facilities. It may not extend beyond reliable operation of such facilities or apply to other facilities. Such facilities include all those necessary for operating an interconnected electric energy transmission network, or any portion of that network, including control systems. The proposed Reliability Standard may apply to any design of planned additions or modifications of such facilities that is necessary to provide for reliable operation. It may also apply to Cybersecurity protection.

Order No. 672 at P 324. The proposed Reliability Standard must be designed to achieve a specified reliability goal and must contain a technically sound means to achieve this goal. Although any person may propose a topic for a Reliability Standard to the ERO, in the ERO's process, the specific proposed Reliability Standard should be developed initially by persons within the electric power industry and community with a high level of technical expertise and be based on sound technical and engineering criteria. It should be based on actual data and lessons learned from past operating incidents, where appropriate. The process for ERO approval of a proposed Reliability Standard should be fair and open to all interested persons.

compliance process, will produce well-maintained Protection Systems on a continent-wide basis. Improved overall reliability of the Bulk Electric System will be a direct result of dependable Protection Systems.

Protection Systems are comprised of components whose purpose is to monitor the "health" of the Bulk Electric System and take immediate, corrective action when power system conditions degrade to a point at which safety, stability, and reliability are at risk. Enacting a proposed Standard which requires entities to assure the dependable performance of Protection Systems guarding the Bulk Electric System —thus promoting reliable operation of the Bulk Electric System — is a crucial element in maintaining Bulk-Power System reliability. It is, therefore, imperative that entities conduct the kind of periodic verifications specified in these Protection System Maintenance Programs to ensure Protection Systems will function properly when called upon.

The proposed PRC-005-2 Reliability Standard also establishes a technically sound basis for assuring that Protection Systems have maximum allowable time intervals applied on specified maintenance activities that are appropriate for the types of technology employed in Protection Systems. Specifically, the proposed Standard utilizes different types of maintenance programs, requires minimum activities for Protection Systems, and creates criteria for a statistical performance-based maintenance approach.

First, the proposed Reliability Standard contains three different types of maintenance programs to provide Functional Entities with options to achieve the reliability goal. These include traditional time-based methods, advanced technology condition-based methods and statistical performance-based methods.

Second, minimum activities are included in the Tables for the various components of Protection Systems in the proposed PRC-005-2 Standard. These activities provide a technically sound means to ensure Protection Systems are kept in working order but do not specifically prescribe "the how-to". Entities must perform the activities required by this proposed Standard, but have the flexibility to use various technologies to create their own Protection System Maintenance Program. The activities listed in the Tables are accompanied by the maximum allowable intervals appropriate for the activities and components listed. These activities enhance reliability by making uniform requirements mandatory for entities inter-connected with the Bulk Electric System throughout North America. Proposed PRC-005-2 now requires key activities fostering consistent, effective maintenance.

Lastly, the criteria established in Requirement R2 of proposed PRC-005-2 and Attachment A provide a technically sound methodology describing a statistical performance-based maintenance approach that allows for a maintenance program that can use trending, success rates and statistical analysis to mold a maintenance program into the specific needs of an entity without any compromise to the reliability of the Bulk Electric System.

2. Proposed Reliability Standards must be applicable only to users, owners and operators of the bulk power system, and must be clear and unambiguous as to what is required and who is required to comply.[3]

The proposed Reliability Standard applies to Transmission Owners, Generator Owners, and Distribution Providers and is clear and unambiguous as to what is required and who is required to comply, in accordance with Order No. 672. The proposed Reliability Standard also clearly lists the types of Facilities subject to compliance with proposed PRC-005-2.

---

[3] Order No. 672 at P 322. The proposed Reliability Standard may impose a requirement on any user, owner, or operator of such facilities, but not on others.

Order No. 672 at P 325. The proposed Reliability Standard should be clear and unambiguous regarding what is required and who is required to comply. Users, owners, and operators of the Bulk-Power System must know what they are required to do to maintain reliability.

NERC Reliability Standard PRC-005-1b (the currently-effective Reliability Standard) is not specific as to the applicable Protection Systems in generating stations. The proposed PRC-005-2 Reliability Standard adds specificity regarding these Protection Systems in that those Protection Systems that could trip the generator, either directly or by a generator lockout relay, are explicitly included.

3. A proposed Reliability Standard must include clear and understandable consequences and a range of penalties (monetary and/or non-monetary) for a violation.[4]

The proposed Reliability Standard includes clear and understandable consequences by assigning each primary Requirement a VRF and a VSL in accordance with Order No. 672. These elements support the determination of an initial value range for the base penalty amount regarding violations of requirements in Commission-approved Reliability Standards, as defined in the ERO Sanction Guidelines. Analysis of the VRFs and VSLs for proposed Reliability Standard PRC-005-2 is contained in **Exhibit I.**

[4] Order No. 672 at P 326. The possible consequences, including range of possible penalties, for violating a proposed Reliability Standard should be clear and understandable by those who must comply.

4. **A proposed Reliability Standard must identify clear and objective criterion or measure for compliance, so that it can be enforced in a consistent and non-preferential manner.**[5]

The proposed Reliability Standard contains Measures that support each Requirement by clearly identifying what is required to demonstrate compliance and how the requirement will be enforced. These Measures, included below, help provide clarity regarding how the Requirements will be enforced, and ensure that the Requirements will be enforced in a clear, consistent, and non-preferential manner and without prejudice to any party.

M1. Each Transmission Owner, Generator Owner and Distribution Provider shall have a documented Protection System Maintenance Program in accordance with Requirement R1. For each Protection System Component Type, the documentation shall include the type of maintenance method applied (time-based, performance-based, or a combination of these maintenance methods), and shall include all batteries associated with the station dc supply Component Types in a time-based program as described in Table 1-4 and Table 3. (Part 1.1) For Component Types that use monitoring to extend the maintenance intervals, the responsible entity(s) shall have evidence for each protection Component Type (such as manufacturer's specifications or engineering drawings) of the appropriate monitored Component attributes as specified in Tables 1-1 through 1-5, Table 2, and Table 3. (Part 1.2)

M2. Each Transmission Owner, Generator Owner, and Distribution Provider that uses performance-based maintenance intervals shall have evidence that its current performance-based maintenance program(s) is in accordance with Requirement R2, which may include but is not limited to Component lists, dated maintenance records, and dated analysis records and results.

M3. Each Transmission Owner, Generator Owner, and Distribution Provider that utilizes time-based maintenance program(s) shall have evidence that it has maintained its Protection System Components included within its time-based program in accordance with Requirement R3. The evidence may include but is not limited to dated maintenance records, dated maintenance summaries, dated check-off lists, dated inspection records, or dated work orders.

M4. Each Transmission Owner, Generator Owner, and Distribution Provider that utilizes performance-based maintenance intervals in accordance with Requirement R2 shall have evidence that it has implemented the Protection System Maintenance Program for the Protection System Components included in its performance-based program in accordance with Requirement R4. The evidence may include but is not limited to dated maintenance records, dated maintenance summaries, dated check-off lists, dated inspection records, or dated work orders.

M5. Each Transmission Owner, Generator Owner, and Distribution Provider shall have evidence that it has undertaken efforts to correct identified Unresolved Maintenance Issues in accordance with Requirement R5. The evidence may include but is not limited to work orders, replacement Component orders, invoices, project schedules with completed milestones, return material authorizations (RMAs) or purchase orders.

---

[5] Order No. 672 at P 327. There should be a clear criterion or measure of whether an entity is in compliance with a proposed Reliability Standard. It should contain or be accompanied by an objective measure of compliance so that it can be enforced and so that enforcement can be applied in a consistent and non-preferential manner.

5. Proposed Reliability Standards should achieve a reliability goal effectively and efficiently — but do not necessarily have to reflect "best practices" without regard to implementation cost or historical regional infrastructure design.[6]

The proposed PRC-005-2 Reliability Standard achieves the reliability goal of maintaining Protection Systems in working order effectively and efficiently in accordance with Order No. 672 by relying upon any single method or approach to performing maintenance activities. The proposed PRC-005-2 is flexible enough to encourage the use of advanced technology that can enhance Bulk Electric System reliability making the proposed Reliability Standard effective to meet the reliability goal. The proposed Reliability Standard is effective in that it requires Transmission Owners, Generator Owners, and Distribution Providers to have a Protection System Maintenance Program.

This approach is efficient because it allows entities to design its own program without specifically stating "how" a program must be tailored. Efficiency is also achieved, in part, through the combination of four protection system Reliability Standards into a single Reliability Standard, streamlining compliance and enforcement. The entities' Protection System Maintenance Program must include, at a minimum, the activities listed in the proposed PRC-005-2 Tables. The activities listed must be performed with a frequency that is at least as stringent as the maximum allowable time intervals stated in the proposed Reliability Standard.

The proposed Reliability Standard also requires the testing of Protection System components while minimizing Bulk Electric System exposure to excessive planned and unplanned system outages. The proposed Reliability Standard thus strikes a balance between traditional recurring maintenance activities and the unnecessary additional time out-of-service

---

[6] Order No. 672 at P 328. The proposed Reliability Standard does not necessarily have to reflect the optimal method, or "best practice," for achieving its reliability goal without regard to implementation cost or historical regional infrastructure design. It should however achieve its reliability goal effectively and efficiently.

that traditional maintenance approaches require. If Protection System components are unnecessarily out-of-service, overall reliability of the Bulk Electric System can be negatively affected.

6. Proposed Reliability Standards cannot be "lowest common denominator," *i.e.*, cannot reflect a compromise that does not adequately protect Bulk-Power System reliability. Proposed Reliability Standards can consider costs to implement for smaller entities, but not at consequences of less than excellence in operating system reliability.[7]

The proposed Reliability Standard does not reflect a "lowest common denominator" approach. To the contrary, the proposed Standard represents a significant improvement over the previous version as described in the petition. The requirements in the proposed PRC-005-2 Reliability Standard propose a standard approach to all entities, without differentiation based on entity size. The final proposed Reliability Standard clearly identifies the Requirements for distributed Undervoltage Load Shedding and Underfrequency Load Shedding equipment. The final proposed Reliability Standard also benefited from involvement from subject-matter-experts from the Institute of Electrical and Electronics Engineers in better characterizing the maintenance activities for station batteries. The end result of the standards development process was a stronger proposed Reliability Standard that meets the Commission's directives and improves reliability.

---

[7] Order No. 672 at P 329. The proposed Reliability Standard must not simply reflect a compromise in the ERO's Reliability Standard development process based on the least effective North American practice — the so-called "lowest common denominator" — if such practice does not adequately protect Bulk-Power System reliability. Although FERC will give due weight to the technical expertise of the ERO, we will not hesitate to remand a proposed Reliability Standard if we are convinced it is not adequate to protect reliability.

Order No. 672 at P 330. A proposed Reliability Standard may take into account the size of the entity that must comply with the Reliability Standard and the cost to those entities of implementing the proposed Reliability Standard. However, the ERO should not propose a "lowest common denominator" Reliability Standard that would achieve less than excellence in operating system reliability solely to protect against reasonable expenses for supporting this vital national infrastructure. For example, a small owner or operator of the Bulk-Power System must bear the cost of complying with each Reliability Standard that applies to it.

All entities, small and large, are expected to comply with this proposed Reliability Standard in the same manner. There are no Requirements in proposed PRC-005-2 that place undue burden on small entities. All entities are expected to maintain similar equipment in a similar fashion at similar intervals, and the amount of equipment to be maintained is directly related to entity size. As a result, small entities may find the transition to the proposed Reliability Standard PRC-005-2 to be less burdensome given the flexibility the mandated Protection System Maintenance Program grants entities for determining the necessary components to maintain.

The proposed PRC-005-2 Reliability Standard also allows an entity to implement a performance-based Protection System Maintenance Program. Entities can share data across ownership lines provided certain criteria are met. For example, two entities in such a shared program may have populations of like components that can be aggregated with equivalent Protection System Maintenance Program obligations for those components. The combined entities' shared program can show total populations, total numbers of components tested and total failures found. The combined entities' Protection System Maintenance Program would follow the same intervals, test procedures, and statistical analysis. Entity cooperation would allow the same outcome as if a process were applied to a single entity. There is no inherent advantage or disadvantage to multiple entities cooperating in such a manner. The proposed Reliability Standard is written such that small entities with small populations of equipment have the same access to performance-based maintenance as the larger entities.

7. **Proposed Reliability Standards must be designed to apply throughout North America to the maximum extent achievable with a single Reliability Standard while not favoring one geographic area or regional model. It should take into account regional variations in the organization and corporate structures of transmission owners and operators, variations in generation fuel type and ownership patterns, and regional variations in market design if these affect the**

proposed Reliability Standard.[8]

The proposed Reliability Standard applies throughout North America and does not favor one geographic area or regional model.

8. Proposed Reliability Standards should cause no undue negative effect on competition or restriction of the grid beyond any restriction necessary for reliability.[9]

The proposed Reliability Standard does not restrict the available transmission capability or limit use of the bulk-power system in a preferential manner. Specifically, the requirements in the proposed Reliability Standard should cause no restriction of the grid because proper and timely maintenance and testing of Protection System components helps to assure that the Bulk Electric System operates in a safe and reliable manner under both normal and abnormal conditions.

9. The implementation time for the proposed Reliability Standard is reasonable.[10]

The proposed effective date for the proposed Reliability Standard is just and reasonable and appropriately balances the urgency in the need to implement the proposed Reliability Standard against the reasonableness of the time allowed for those who must comply to develop necessary procedures, software, facilities, staffing or other relevant capability. This will allow

---

[8] Order No. 672 at P 331. A proposed Reliability Standard should be designed to apply throughout the interconnected North American Bulk-Power System, to the maximum extent this is achievable with a single Reliability Standard. The proposed Reliability Standard should not be based on a single geographic or regional model but should take into account geographic variations in grid characteristics, terrain, weather, and other such factors; it should also take into account regional variations in the organizational and corporate structures of transmission owners and operators, variations in generation fuel type and ownership patterns, and regional variations in market design if these affect the proposed Reliability Standard.

[9] Order No. 672 at P 332. As directed by section 215 of the FPA, FERC itself will give special attention to the effect of a proposed Reliability Standard on competition. The ERO should attempt to develop a proposed Reliability Standard that has no undue negative effect on competition. Among other possible considerations, a proposed Reliability Standard should not unreasonably restrict available transmission capability on the Bulk-Power System beyond any restriction necessary for reliability and should not limit use of the Bulk-Power System in an unduly preferential manner. It should not create an undue advantage for one competitor over another.

[10] Order No. 672 at P 333. In considering whether a proposed Reliability Standard is just and reasonable, FERC will consider also the timetable for implementation of the new requirements, including how the proposal balances any urgency in the need to implement it against the reasonableness of the time allowed for those who must comply to develop the necessary procedures, software, facilities, staffing or other relevant capability.

applicable entities adequate time to ensure compliance with the requirements. The proposed effective date is explained in detail in the proposed Implementation Plan, attached as **Exhibit C**.

10. The Reliability Standard was developed in an open and fair manner and in accordance with the Commission-approved Reliability Standard development process.[11]

The proposed Reliability Standard was developed in accordance with NERC's Commission-approved, ANSI- accredited processes for developing and approving Reliability Standards. A complete description of the development process is contained in this petition in Section V and the complete development record is included as **Exhibit J**. These processes included, among other things, multiple comment periods, pre-ballot review periods, and balloting periods. Additionally, all standard drafting team meetings were properly noticed and open to the public. The initial and recirculation ballots both achieved a quorum and exceeded the required ballot pool approval levels. The standard development process did include certain Standards Committee-approved deviations and these are described in Section V of this petition.

11. NERC must explain any balancing of vital public interests in the development of proposed Reliability Standards.[12]

NERC has not identified any competing public interests regarding the request for approval of this proposed Reliability Standard. No comments were received that indicated the proposed Reliability Standard conflicts with other vital public interests.

---

[11] Order No. 672 at P 334. Further, in considering whether a proposed Reliability Standard meets the legal standard of review, we will entertain comments about whether the ERO implemented its Commission-approved Reliability Standard development process for the development of the particular proposed Reliability Standard in a proper manner, especially whether the process was open and fair. However, we caution that we will not be sympathetic to arguments by interested parties that choose, for whatever reason, not to participate in the ERO's Reliability Standard development process if it is conducted in good faith in accordance with the procedures approved by FERC.

[12] Order No. 672 at P 335. Finally, we understand that at times development of a proposed Reliability Standard may require that a particular reliability goal must be balanced against other vital public interests, such as environmental, social, and other goals. We expect the ERO to explain any such balancing in its application for approval of a proposed Reliability Standard.

12. Proposed Reliability Standards must consider any other appropriate factors.[13]

No other factors relevant to whether the proposed Reliability Standard is just and reasonable were identified.

[13] Order No. 672 at P 323. In considering whether a proposed Reliability Standard is just and reasonable, we will consider the following general factors, as well as other factors that are appropriate for the particular Reliability Standard proposed.

Exhibit B

Proposed Reliability Standard PRC-005-2

A. Introduction

1. Title: **Protection System Maintenance**

2. Number: PRC-005-2

3. Purpose: To document and implement programs for the maintenance of all Protection Systems affecting the reliability of the Bulk Electric System (BES) so that these Protection Systems are kept in working order.

4. Applicability:

4.1. Functional Entities:

4.1.1 Transmission Owner

4.1.2 Generator Owner

4.1.3 Distribution Provider

4.2. Facilities:

4.2.1 Protection Systems that are installed for the purpose of detecting Faults on BES Elements (lines, buses, transformers, etc.)

4.2.2 Protection Systems used for underfrequency load-shedding systems installed per ERO underfrequency load-shedding requirements.

4.2.3 Protection Systems used for undervoltage load-shedding systems installed to prevent system voltage collapse or voltage instability for BES reliability.

4.2.4 Protection Systems installed as a Special Protection System (SPS) for BES reliability.

4.2.5 Protection Systems for generator Facilities that are part of the BES, including:

4.2.5.1 Protection Systems that act to trip the generator either directly or via lockout or auxiliary tripping relays.

4.2.5.2 Protection Systems for generator step-up transformers for generators that are part of the BES.

4.2.5.3 Protection Systems for transformers connecting aggregated generation, where the aggregated generation is part of the BES (e.g., transformers connecting facilities such as wind-farms to the BES).

4.2.5.4 Protection Systems for station service or excitation transformers connected to the generator bus of generators which are part of the BES, that act to trip the generator either directly or via lockout or tripping auxiliary relays.

5. Effective Date: See Implementation Plan

B. Requirements

R1. Each Transmission Owner, Generator Owner, and Distribution Provider shall establish a Protection System Maintenance Program (PSMP) for its Protection Systems identified in Section 4.2. *[Violation Risk Factor: Medium] [Time Horizon: Operations Planning]*

The PSMP shall:

1.1. Identify which maintenance method (time-based, performance-based per PRC-005 Attachment A, or a combination) is used to address each Protection System Component Type. All batteries associated with the station dc supply Component Type of a Protection System shall be included in a time-based program as described in Table 1-4 and Table 3.

> ***Component Type*** *- Any one of the five specific elements of the Protection System definition.*

1.2. Include the applicable monitored Component attributes applied to each Protection System Component Type consistent with the maintenance intervals specified in Tables 1-1 through 1-5, Table 2, and Table 3 where monitoring is used to extend the maintenance intervals beyond those specified for unmonitored Protection System Components.

> **Component** – *A component is any individual discrete piece of equipment included in a Protection System, including but not limited to a protective relay or current sensing device. The designation of what constitutes a control circuit component is very dependent upon how an entity performs and tracks the testing of the control circuitry. Some entities test their control circuits on a breaker basis whereas others test their circuitry on a local zone of protection basis. Thus, entities are allowed the latitude to designate their own definitions of control circuit components. Another example of where the entity has some discretion on determining what constitutes a single component is the voltage and current sensing devices, where the entity may choose either to designate a full three-phase set of such devices or a single device as a single component.*

R2. Each Transmission Owner, Generator Owner, and Distribution Provider that uses performance-based maintenance intervals in its PSMP shall follow the procedure established in PRC-005 Attachment A to establish and maintain its performance-based intervals. *[Violation Risk Factor: Medium] [Time Horizon: Operations Planning]*

R3. Each Transmission Owner, Generator Owner, and Distribution Provider that utilizes time-based maintenance program(s) shall maintain its Protection System Components that are included within the time-based maintenance program in accordance with the minimum maintenance activities and maximum maintenance intervals prescribed within Tables 1-1 through 1-5, Table 2, and Table 3. *[Violation Risk Factor: High] [Time Horizon: Operations Planning]*

R4. Each Transmission Owner, Generator Owner, and Distribution Provider that utilizes performance-based maintenance program(s) in accordance with Requirement R2 shall implement and follow its PSMP for its Protection System Components that are included within the performance-based program(s). *[Violation Risk Factor: High] [Time Horizon: Operations Planning]*

R5. Each Transmission Owner, Generator Owner, and Distribution Provider shall demonstrate efforts to correct identified Unresolved Maintenance Issues. *[Violation Risk Factor: Medium] [Time Horizon: Operations Planning]*

> ***Unresolved Maintenance Issue*** *- A deficiency identified during a maintenance activity that causes the component to not meet the intended performance, cannot be corrected during the maintenance interval, and requires follow-up corrective action.*

C. Measures

M1. Each Transmission Owner, Generator Owner and Distribution Provider shall have a documented Protection System Maintenance Program in accordance with Requirement R1.

For each Protection System Component Type, the documentation shall include the type of maintenance method applied (time-based, performance-based, or a combination of these maintenance methods), and shall include all batteries associated with the station dc supply Component Types in a time-based program as described in Table 1-4 and Table 3. (Part 1.1)

For Component Types that use monitoring to extend the maintenance intervals, the responsible entity(s) shall have evidence for each protection Component Type (such as manufacturer's specifications or engineering drawings) of the appropriate monitored Component attributes as specified in Tables 1-1 through 1-5, Table 2, and Table 3. (Part 1.2)

M2. Each Transmission Owner, Generator Owner, and Distribution Provider that uses performance-based maintenance intervals shall have evidence that its current performance-based maintenance program(s) is in accordance with Requirement R2, which may include but is not limited to Component lists, dated maintenance records, and dated analysis records and results.

M3. Each Transmission Owner, Generator Owner, and Distribution Provider that utilizes time-based maintenance program(s) shall have evidence that it has maintained its Protection System Components included within its time-based program in accordance with Requirement R3. The evidence may include but is not limited to dated maintenance records, dated maintenance summaries, dated check-off lists, dated inspection records, or dated work orders.

M4. Each Transmission Owner, Generator Owner, and Distribution Provider that utilizes performance-based maintenance intervals in accordance with Requirement R2 shall have evidence that it has implemented the Protection System Maintenance Program for the Protection System Components included in its performance-based program in accordance with Requirement R4. The evidence may include but is not limited to dated maintenance records, dated maintenance summaries, dated check-off lists, dated inspection records, or dated work orders.

M5. Each Transmission Owner, Generator Owner, and Distribution Provider shall have evidence that it has undertaken efforts to correct identified Unresolved Maintenance Issues in accordance with Requirement R5. The evidence may include but is not limited to work orders, replacement Component orders, invoices, project schedules with completed milestones, return material authorizations (RMAs) or purchase orders.

D. Compliance

1. Compliance Monitoring Process

1.1. Compliance Enforcement Authority

Regional Entity

1.2. Compliance Monitoring and Enforcement Processes:

Compliance Audit

Self-Certification

Spot Checking

Compliance Investigation

Self-Reporting

Complaint

1.3. Evidence Retention

The following evidence retention periods identify the period of time an entity is required to retain specific evidence to demonstrate compliance. For instances where the evidence retention period specified below is shorter than the time since the last audit, the Compliance Enforcement Authority may ask an entity to provide other evidence to show that it was compliant for the full time period since the last audit.

The Transmission Owner, Generator Owner, and Distribution Provider shall each keep data or evidence to show compliance as identified below unless directed by its Compliance Enforcement Authority to retain specific evidence for a longer period of time as part of an investigation.

For Requirement R1, the Transmission Owner, Generator Owner, and Distribution Provider shall each keep its current dated Protection System Maintenance Program, as well as any superseded versions since the preceding compliance audit, including the documentation that specifies the type of maintenance program applied for each Protection System Component Type.

For Requirement R2, Requirement R3, Requirement R4, and Requirement R5, the Transmission Owner, Generator Owner, and Distribution Provider shall each keep documentation of the two most recent performances of each distinct maintenance activity for the Protection System Component, or all performances of each distinct maintenance activity for the Protection System Component since the previous scheduled audit date, whichever is longer.

The Compliance Enforcement Authority shall keep the last audit records and all requested and submitted subsequent audit records.

1.4. Additional Compliance Information

None.

2. Violation Severity Levels

Requirement Number	Lower VSL	Moderate VSL	High VSL	Severe VSL
R1	The responsible entity's PSMP failed to specify whether one Component Type is being addressed by time-based or performance-based maintenance, or a combination of both. (Part 1.1) OR The responsible entity's PSMP failed to include applicable station batteries in a time-based program. (Part 1.1)	The responsible entity's PSMP failed to specify whether two Component Types are being addressed by time-based or performance-based maintenance, or a combination of both. (Part 1.1)	The responsible entity's PSMP failed to include the applicable monitoring attributes applied to each Protection System Component Type consistent with the maintenance intervals specified in Tables 1-1 through 1-5, Table 2, and Table 3 where monitoring is used to extend the maintenance intervals beyond those specified for unmonitored Protection System Components. (Part 1.2).	The responsible entity failed to establish a PSMP. OR The responsible entity failed to specify whether three or more Component Types are being addressed by time-based or performance-based maintenance, or a combination of both. (Part 1.1).
R2	The responsible entity uses performance-based maintenance intervals in its PSMP but failed to reduce Countable Events to no more than 4% within three years.	NA	The responsible entity uses performance-based maintenance intervals in its PSMP but failed to reduce Countable Events to no more than 4% within four years.	The responsible entity uses performance-based maintenance intervals in its PSMP but: 1) Failed to establish the technical justification described within Requirement R2 for the initial use of the performance-based PSMP OR 2) Failed to reduce Countable Events to no more than 4% within five years OR 3) Maintained a Segment with less than 60 Components OR 4) Failed to: • Annually update the list of Components, OR

Requirement Number	Lower VSL	Moderate VSL	High VSL	Severe VSL
				• Annually perform maintenance on the greater of 5% of the segment population or 3 Components, OR • Annually analyze the program activities and results for each Segment.
R3	For Protection System Components included within a time-based maintenance program, the responsible entity failed to maintain 5% or less of the total Components included within a specific Protection System Component Type, in accordance with the minimum maintenance activities and maximum maintenance intervals prescribed within Tables 1-1 through 1-5, Table 2, and Table 3.	For Protection System Components included within a time-based maintenance program, the responsible entity failed to maintain more than 5% but 10% or less of the total Components included within a specific Protection System Component Type, in accordance with the minimum maintenance activities and maximum maintenance intervals prescribed within Tables 1-1 through 1-5, Table 2, and Table 3.	For Protection System Components included within a time-based maintenance program, the responsible entity failed to maintain more than 10% but 15% or less of the total Components included within a specific Protection System Component Type, in accordance with the minimum maintenance activities and maximum maintenance intervals prescribed within Tables 1-1 through 1-5, Table 2, and Table 3.	For Protection System Components included within a time-based maintenance program, the responsible entity failed to maintain more than 15% of the total Components included within a specific Protection System Component Type, in accordance with the minimum maintenance activities and maximum maintenance intervals prescribed within Tables 1-1 through 1-5, Table 2, and Table 3.
R4	For Protection System Components included within a performance-based maintenance program, the responsible entity failed to maintain 5% or less of the annual scheduled maintenance for a specific Protection System Component Type in accordance with their performance-based PSMP.	For Protection System Components included within a performance-based maintenance program, the responsible entity failed to maintain more than 5% but 10% or less of the annual scheduled maintenance for a specific Protection System Component Type in accordance with their performance-based PSMP.	For Protection System Components included within a performance-based maintenance program, the responsible entity failed to maintain more than 10% but 15% or less of the annual scheduled maintenance for a specific Protection System Component Type in accordance with their performance-based PSMP.	For Protection System Components included within a performance-based maintenance program, the responsible entity failed to maintain more than 15% of the annual scheduled maintenance for a specific Protection System Component Type in accordance with their performance-based PSMP.
R5	The responsible entity failed to undertake efforts to correct 5 or fewer identified Unresolved	The responsible entity failed to undertake efforts to correct greater than 5, but less than or equal to 10	The responsible entity failed to undertake efforts to correct greater than 10, but less than or equal to 15	The responsible entity failed to undertake efforts to correct greater than 15 identified Unresolved

Requirement Number	Lower VSL	Moderate VSL	High VSL	Severe VSL
	Maintenance Issues.	identified Unresolved Maintenance Issues.	identified Unresolved Maintenance Issues.	Maintenance Issues.

E. Regional Variances

None

F. Supplemental Reference Document

The following documents present a detailed discussion about determination of maintenance intervals and other useful information regarding establishment of a maintenance program.

1. PRC-005-2 Protection System Maintenance Supplementary Reference and FAQ — July 2012.

Version History

Version	Date	Action	Change Tracking
0	April 1, 2005	Effective Date	New
1	December 1, 2005	1. Changed incorrect use of certain hyphens (-) to "en dash" (–) and "em dash (—)." 2. Added "periods" to items where appropriate. 3. Changed "Timeframe" to "Time Frame" in item D, 1.2.	01/20/05
1a	February 17, 2011	Added Appendix 1 - Interpretation regarding applicability of standard to protection of radially connected transformers	Project 2009-17 interpretation
1a	February 17, 2011	Adopted by Board of Trustees	
1a	September 26, 2011	FERC Order issued approving interpretation of R1 and R2 (FERC's Order is effective as of September 26, 2011)	
1.1a	February 1, 2012	Errata change: Clarified inclusion of generator interconnection Facility in Generator Owner's responsibility	Revision under Project 2010-07
1b	February 3, 2012	FERC Order issued approving interpretation of R1, R1.1, and R1.2 (FERC's Order dated March 14, 2012). Updated version from 1a to 1b.	Project 2009-10 Interpretation
1.1b	April 23, 2012	Updated standard version to 1.1b to reflect FERC approval of PRC-005-1b.	Revision under Project 2010-07

1.1b	May 9, 2012	PRC-005-1.1b was adopted by the Board of Trustees as part of Project 2010-07 (GOTO).	
2	November7, 2012	Adopted by Board of Trustees	Complete revision, absorbing maintenance requirements from PRC-005-1b, PRC-008-0, PRC-011-0, PRC-017-0

Table 1-1 Component Type - Protective Relay Excluding distributed UFLS and distributed UVLS (see Table 3)		
Component Attributes	**Maximum Maintenance Interval[1]**	**Maintenance Activities**
Any unmonitored protective relay not having all the monitoring attributes of a category below.	6 calendar years	For all unmonitored relays: • Verify that settings are as specified For non-microprocessor relays: • Test and, if necessary calibrate For microprocessor relays: • Verify operation of the relay inputs and outputs that are essential to proper functioning of the Protection System. • Verify acceptable measurement of power system input values.
Monitored microprocessor protective relay with the following: • Internal self-diagnosis and alarming (see Table 2). • Voltage and/or current waveform sampling three or more times per power cycle, and conversion of samples to numeric values for measurement calculations by microprocessor electronics. • Alarming for power supply failure (see Table 2).	12 calendar years	Verify: • Settings are as specified. • Operation of the relay inputs and outputs that are essential to proper functioning of the Protection System. • Acceptable measurement of power system input values.

[1] For the tables in this standard, a calendar year starts on the first day of a new year (January 1) after a maintenance activity has been completed. For the tables in this standard, a calendar month starts on the first day of the first month after a maintenance activity has been completed.

Table 1-1 Component Type - Protective Relay Excluding distributed UFLS and distributed UVLS (see Table 3)		
Component Attributes	**Maximum Maintenance Interval[1]**	**Maintenance Activities**
Monitored microprocessor protective relay with preceding row attributes and the following: • Ac measurements are continuously verified by comparison to an independent ac measurement source, with alarming for excessive error (See Table 2). • Some or all binary or status inputs and control outputs are monitored by a process that continuously demonstrates ability to perform as designed, with alarming for failure (See Table 2). • Alarming for change of settings (See Table 2).	12 calendar years	Verify only the unmonitored relay inputs and outputs that are essential to proper functioning of the Protection System.

Table 1-2 Component Type - Communications Systems Excluding distributed UFLS and distributed UVLS (see Table 3)		
Component Attributes	**Maximum Maintenance Interval**	**Maintenance Activities**
Any unmonitored communications system necessary for correct operation of protective functions, and not having all the monitoring attributes of a category below.	4 calendar months	Verify that the communications system is functional.
	6 calendar years	Verify that the communications system meets performance criteria pertinent to the communications technology applied (e.g. signal level, reflected power, or data error rate). Verify operation of communications system inputs and outputs that are essential to proper functioning of the Protection System.
Any communications system with continuous monitoring or periodic automated testing for the presence of the channel function, and alarming for loss of function (See Table 2).	12 calendar years	Verify that the communications system meets performance criteria pertinent to the communications technology applied (e.g. signal level, reflected power, or data error rate). Verify operation of communications system inputs and outputs that are essential to proper functioning of the Protection System.
Any communications system with all of the following: • Continuous monitoring or periodic automated testing for the performance of the channel using criteria pertinent to the communications technology applied (e.g. signal level, reflected power, or data error rate, and alarming for excessive performance degradation). (See Table 2) • Some or all binary or status inputs and control outputs are monitored by a process that continuously demonstrates ability to perform as designed, with alarming for failure (See Table 2).	12 calendar years	Verify only the unmonitored communications system inputs and outputs that are essential to proper functioning of the Protection System

Table 1-3 Component Type - Voltage and Current Sensing Devices Providing Inputs to Protective Relays Excluding distributed UFLS and distributed UVLS (see Table 3)		
Component Attributes	**Maximum Maintenance Interval**	**Maintenance Activities**
Any voltage and current sensing devices not having monitoring attributes of the category below.	12 calendar years	Verify that current and voltage signal values are provided to the protective relays.
Voltage and Current Sensing devices connected to microprocessor relays with AC measurements are continuously verified by comparison of sensing input value, as measured by the microprocessor relay, to an independent ac measurement source, with alarming for unacceptable error or failure (see Table 2).	No periodic maintenance specified	None.

Table 1-4(a) Component Type – Protection System Station dc Supply Using Vented Lead-Acid (VLA) Batteries Excluding distributed UFLS and distributed UVLS (see Table 3) Protection System Station dc supply used only for non-BES interrupting devices for SPS, non-distributed UFLS systems, or non-distributed UVLS systems is excluded (see Table 1-4(e)).		
Component Attributes	**Maximum Maintenance Interval**	**Maintenance Activities**
Protection System Station dc supply using **Vented Lead-Acid (VLA) batteries** not having monitoring attributes of Table 1-4(f).	4 Calendar Months	Verify: • Station dc supply voltage Inspect: • Electrolyte level • For unintentional grounds
	18 Calendar Months	Verify: • Float voltage of battery charger • Battery continuity • Battery terminal connection resistance • Battery intercell or unit-to-unit connection resistance Inspect: • Cell condition of all individual battery cells where cells are visible – or measure battery cell/unit internal ohmic values where the cells are not visible • Physical condition of battery rack

Table 1-4(a) Component Type – Protection System Station dc Supply Using Vented Lead-Acid (VLA) Batteries Excluding distributed UFLS and distributed UVLS (see Table 3) Protection System Station dc supply used only for non-BES interrupting devices for SPS, non-distributed UFLS systems, or non-distributed UVLS systems is excluded (see Table 1-4(e)).		
Component Attributes	**Maximum Maintenance Interval**	**Maintenance Activities**
	18 Calendar Months -or- 6 Calendar Years	Verify that the station battery can perform as manufactured by evaluating cell/unit measurements indicative of battery performance (e.g. internal ohmic values or float current) against the station battery baseline. -or- Verify that the station battery can perform as manufactured by conducting a performance or modified performance capacity test of the entire battery bank.

Table 1-4(b) Component Type – Protection System Station dc Supply Using Valve-Regulated Lead-Acid (VRLA) Batteries Excluding distributed UFLS and distributed UVLS (see Table 3) Protection System Station dc supply used only for non-BES interrupting devices for SPS, non-distributed UFLS systems, or non-distributed UVLS systems is excluded (see Table 1-4(e)).		
Component Attributes	**Maximum Maintenance Interval**	**Maintenance Activities**
Protection System Station dc supply **with Valve Regulated Lead-Acid (VRLA) batteries** not having monitoring attributes of Table 1-4(f).	4 Calendar Months	Verify: • Station dc supply voltage Inspect: • For unintentional grounds
	6 Calendar Months	Inspect: • Condition of all individual units by measuring battery cell/unit internal ohmic values.
	18 Calendar Months	Verify: • Float voltage of battery charger • Battery continuity • Battery terminal connection resistance • Battery intercell or unit-to-unit connection resistance Inspect: • Physical condition of battery rack

Table 1-4(b) Component Type – Protection System Station dc Supply Using Valve-Regulated Lead-Acid (VRLA) Batteries Excluding distributed UFLS and distributed UVLS (see Table 3) Protection System Station dc supply used only for non-BES interrupting devices for SPS, non-distributed UFLS systems, or non-distributed UVLS systems is excluded (see Table 1-4(e)).		
Component Attributes	**Maximum Maintenance Interval**	**Maintenance Activities**
	6 Calendar Months -or- 3 Calendar Years	Verify that the station battery can perform as manufactured by evaluating cell/unit measurements indicative of battery performance (e.g. internal ohmic values or float current) against the station battery baseline. -or- Verify that the station battery can perform as manufactured by conducting a performance or modified performance capacity test of the entire battery bank.

Table 1-4(c) Component Type – Protection System Station dc Supply Using Nickel-Cadmium (NiCad) Batteries Excluding distributed UFLS and distributed UVLS (see Table 3) Protection System Station dc supply used only for non-BES interrupting devices for SPS, non-distributed UFLS system, or non-distributed UVLS systems is excluded (see Table 1-4(e)).		
Component Attributes	**Maximum Maintenance Interval**	**Maintenance Activities**
Protection System Station dc supply **Nickel-Cadmium (NiCad) batteries** not having monitoring attributes of Table 1-4(f).	4 Calendar Months	Verify: • Station dc supply voltage Inspect: • Electrolyte level • For unintentional grounds
	18 Calendar Months	Verify: • Float voltage of battery charger • Battery continuity • Battery terminal connection resistance • Battery intercell or unit-to-unit connection resistance Inspect: • Cell condition of all individual battery cells. • Physical condition of battery rack
	6 Calendar Years	Verify that the station battery can perform as manufactured by conducting a performance or modified performance capacity test of the entire battery bank.

Table 1-4(d) Component Type – Protection System Station dc Supply Using Non Battery Based Energy Storage Excluding distributed UFLS and distributed UVLS (see Table 3) Protection System Station dc supply used only for non-BES interrupting devices for SPS, non-distributed UFLS system, or non-distributed UVLS systems is excluded (see Table 1-4(e)).		
Component Attributes	**Maximum Maintenance Interval**	**Maintenance Activities**
Any Protection System station dc supply not using a battery and not having monitoring attributes of Table 1-4(f).	4 Calendar Months	Verify: • Station dc supply voltage Inspect: • For unintentional grounds
	18 Calendar Months	Inspect: Condition of non-battery based dc supply
	6 Calendar Years	Verify that the dc supply can perform as manufactured when ac power is not present.

Table 1-4(e) Component Type – Protection System Station dc Supply for non-BES Interrupting Devices for SPS, non-distributed UFLS, and non-distributed UVLS systems		
Component Attributes	**Maximum Maintenance Interval**	**Maintenance Activities**
Any Protection System dc supply used for tripping only non-BES interrupting devices as part of a SPS, non-distributed UFLS, or non-distributed UVLS system and not having monitoring attributes of Table 1-4(f).	When control circuits are verified (See Table 1-5)	Verify Station dc supply voltage.

Table 1-4(f) Exclusions for Protection System Station dc Supply Monitoring Devices and Systems		
Component Attributes	**Maximum Maintenance Interval**	**Maintenance Activities**
Any station dc supply with high and low voltage monitoring and alarming of the battery charger voltage to detect charger overvoltage and charger failure (See Table 2).	No periodic maintenance specified	No periodic verification of station dc supply voltage is required.
Any battery based station dc supply with electrolyte level monitoring and alarming in every cell (See Table 2).		No periodic inspection of the electrolyte level for each cell is required.
Any station dc supply with unintentional dc ground monitoring and alarming (See Table 2).		No periodic inspection of unintentional dc grounds is required.
Any station dc supply with charger float voltage monitoring and alarming to ensure correct float voltage is being applied on the station dc supply (See Table 2).		No periodic verification of float voltage of battery charger is required.
Any battery based station dc supply with monitoring and alarming of battery string continuity (See Table 2).		No periodic verification of the battery continuity is required.
Any battery based station dc supply with monitoring and alarming of the intercell and/or terminal connection detail resistance of the entire battery (See Table 2).		No periodic verification of the intercell and terminal connection resistance is required.
Any Valve Regulated Lead-Acid (VRLA) or Vented Lead-Acid (VLA) station battery with internal ohmic value or float current monitoring and alarming, and evaluating present values relative to baseline internal ohmic values for every cell/unit (See Table 2).		No periodic evaluation relative to baseline of battery cell/unit measurements indicative of battery performance is required to verify the station battery can perform as manufactured.
Any Valve Regulated Lead-Acid (VRLA) or Vented Lead-Acid (VLA) station battery with monitoring and alarming of each cell/unit internal ohmic value (See Table 2).		No periodic inspection of the condition of all individual units by measuring battery cell/unit internal ohmic values of a station VRLA or Vented Lead-Acid (VLA) battery is required.

Table 1-5 Component Type - Control Circuitry Associated With Protective Functions Excluding distributed UFLS and distributed UVLS (see Table 3) **Note:** Table requirements apply to all Control Circuitry Components of Protection Systems, and SPSs except as noted.		
Component Attributes	**Maximum Maintenance Interval**	**Maintenance Activities**
Trip coils or actuators of circuit breakers, interrupting devices, or mitigating devices (regardless of any monitoring of the control circuitry).	6 calendar years	Verify that each trip coil is able to operate the circuit breaker, interrupting device, or mitigating device.
Electromechanical lockout devices which are directly in a trip path from the protective relay to the interrupting device trip coil (regardless of any monitoring of the control circuitry).	6 calendar years	Verify electrical operation of electromechanical lockout devices.
Unmonitored control circuitry associated with SPS.	12 calendar years	Verify all paths of the control circuits essential for proper operation of the SPS.
Unmonitored control circuitry associated with protective functions inclusive of all auxiliary relays.	12 calendar years	Verify all paths of the trip circuits inclusive of all auxiliary relays through the trip coil(s) of the circuit breakers or other interrupting devices.
Control circuitry associated with protective functions and/or SPS whose integrity is monitored and alarmed (See Table 2).	No periodic maintenance specified	None.

Table 2 – Alarming Paths and Monitoring In Tables 1-1 through 1-5 and Table 3, alarm attributes used to justify extended maximum maintenance intervals and/or reduced maintenance activities are subject to the following maintenance requirements		
Component Attributes	**Maximum Maintenance Interval**	**Maintenance Activities**
Any alarm path through which alarms in Tables 1-1 through 1-5 and Table 3 are conveyed from the alarm origin to the location where corrective action can be initiated, and not having all the attributes of the "Alarm Path with monitoring" category below. Alarms are reported within 24 hours of detection to a location where corrective action can be initiated.	12 Calendar Years	Verify that the alarm path conveys alarm signals to a location where corrective action can be initiated.
Alarm Path with monitoring: The location where corrective action is taken receives an alarm within 24 hours for failure of any portion of the alarming path from the alarm origin to the location where corrective action can be initiated.	No periodic maintenance specified	None.

Table 3 Maintenance Activities and Intervals for distributed UFLS and distributed UVLS Systems		
Component Attributes	**Maximum Maintenance Interval**	**Maintenance Activities**
Any unmonitored protective relay not having all the monitoring attributes of a category below.	6 calendar years	Verify that settings are as specified For non-microprocessor relays: • Test and, if necessary calibrate For microprocessor relays: • Verify operation of the relay inputs and outputs that are essential to proper functioning of the Protection System. • Verify acceptable measurement of power system input values.
Monitored microprocessor protective relay with the following: • Internal self diagnosis and alarming (See Table 2). • Voltage and/or current waveform sampling three or more times per power cycle, and conversion of samples to numeric values for measurement calculations by microprocessor electronics. Alarming for power supply failure (See Table 2).	12 calendar years	Verify: • Settings are as specified. • Operation of the relay inputs and outputs that are essential to proper functioning of the Protection System. • Acceptable measurement of power system input values
Monitored microprocessor protective relay with preceding row attributes and the following: • Ac measurements are continuously verified by comparison to an independent ac measurement source, with alarming for excessive error (See Table 2). • Some or all binary or status inputs and control outputs are monitored by a process that continuously demonstrates ability to perform as designed, with alarming for failure (See Table 2).	12 calendar years	Verify only the unmonitored relay inputs and outputs that are essential to proper functioning of the Protection System.

Table 3 Maintenance Activities and Intervals for distributed UFLS and distributed UVLS Systems		
Component Attributes	**Maximum Maintenance Interval**	**Maintenance Activities**
Alarming for change of settings (See Table 2).		
Voltage and/or current sensing devices associated with UFLS or UVLS systems.	12 calendar years	Verify that current and/or voltage signal values are provided to the protective relays.
Protection System dc supply for tripping non-BES interrupting devices used only for a UFLS or UVLS system.	12 calendar years	Verify Protection System dc supply voltage.
Control circuitry between the UFLS or UVLS relays and electromechanical lockout and/or tripping auxiliary devices (excludes non-BES interrupting device trip coils).	12 calendar years	Verify the path from the relay to the lockout and/or tripping auxiliary relay (including essential supervisory logic).
Electromechanical lockout and/or tripping auxiliary devices associated only with UFLS or UVLS systems (excludes non-BES interrupting device trip coils).	12 calendar years	Verify electrical operation of electromechanical lockout and/or tripping auxiliary devices.
Control circuitry between the electromechanical lockout and/or tripping auxiliary devices and the non-BES interrupting devices in UFLS or UVLS systems, or between UFLS or UVLS relays (with no interposing electromechanical lockout or auxiliary device) and the non-BES interrupting devices (excludes non-BES interrupting device trip coils).	No periodic maintenance specified	None.
Trip coils of non-BES interrupting devices in UFLS or UVLS systems.	No periodic maintenance specified	None.

PRC-005 — Attachment A

Criteria for a Performance-Based Protection System Maintenance Program

Purpose: To establish a technical basis for initial and continued use of a performance-based Protection System Maintenance Program (PSMP).

To establish the technical justification for the initial use of a performance-based PSMP:

1. Develop a list with a description of Components included in each designated Segment of the Protection System Component population, with a minimum **Segment** population of 60 Components.
2. Maintain the Components in each Segment according to the time-based maximum allowable intervals established in Tables 1-1 through 1-5 and Table 3 until results of maintenance activities for the Segment are available for a minimum of 30 individual Components of the Segment.

> **Segment** – *Protection Systems or components of a consistent design standard, or a particular model or type from a single manufacturer that typically share other common elements. Consistent performance is expected across the entire population of a Segment. A Segment must contain at least sixty (60) individual components.*

3. Document the maintenance program activities and results for each Segment, including maintenance dates and Countable Events for each included Component.
4. Analyze the maintenance program activities and results for each Segment to determine the overall performance of the Segment and develop maintenance intervals.
5. Determine the maximum allowable maintenance interval for each Segment such that the Segment experiences **Countable Events** on no more than 4% of the Components within the Segment, for the greater of either the last 30 Components maintained or all Components maintained in the previous year.

> **Countable Event** – *A failure of a component requiring repair or replacement, any condition discovered during the maintenance activities in Tables 1-1 through 1-5 and Table 3 which requires corrective action, or a Misoperation attributed to hardware failure or calibration failure. Misoperations due to product design errors, software errors, relay settings different from specified settings, Protection System component configuration errors, or Protection System application errors are not included in Countable Events.*

To maintain the technical justification for the ongoing use of a performance-based PSMP:

1. At least annually, update the list of Protection System Components and Segments and/or description if any changes occur within the Segment.
2. Perform maintenance on the greater of 5% of the Components (addressed in the performance based PSMP) in each Segment or 3 individual Components within the Segment in each year.
3. For the prior year, analyze the maintenance program activities and results for each Segment to determine the overall performance of the Segment.

4. Using the prior year's data, determine the maximum allowable maintenance interval for each Segment such that the Segment experiences Countable Events on no more than 4% of the Components within the Segment, for the greater of either the last 30 Components maintained or all Components maintained in the previous year.
5. If the Components in a Protection System Segment maintained through a performance-based PSMP experience 4% or more Countable Events, develop, document, and implement an action plan to reduce the Countable Events to less than 4% of the Segment population within 3 years.

A. Introduction

1. Title: ~~**Transmission and Generation**~~ **Protection System Maintenance** ~~**and Testing**~~

2. Number: PRC-005-~~1.1b~~2

3. Purpose: To ~~ensure all transmission and generation~~document and implement programs for the maintenance of all Protection Systems affecting the reliability of the Bulk Electric System (BES) ~~are maintained and tested~~so that these Protection Systems are kept in working order.

4. Applicability:

4.1. Functional Entities:

~~**4.1.**~~**4.1.1** Transmission Owner~~.~~

~~**4.2.**~~**4.1.2** Generator Owner~~.~~

4.1.3 Distribution Provider ~~that owns~~

4.2. Facilities:

4.2.1 Protection Systems that are installed for the purpose of detecting Faults on BES Elements (lines, buses, transformers, etc.)

4.2.2 Protection Systems used for underfrequency load-shedding systems installed per ERO underfrequency load-shedding requirements.

4.2.3 Protection Systems used for undervoltage load-shedding systems installed to prevent system voltage collapse or voltage instability for BES reliability.

4.2.4 Protection Systems installed as a ~~transmission~~Special Protection System (SPS) for BES reliability.

4.2.5 Protection Systems for generator Facilities that are part of the BES, including:

4.2.5.1 Protection Systems that act to trip the generator either directly or via lockout or auxiliary tripping relays.

4.2.5.2 Protection Systems for generator step-up transformers for generators that are part of the BES.

4.2.5.3 Protection Systems for transformers connecting aggregated generation, where the aggregated generation is part of the BES (e.g., transformers connecting facilities such as wind-farms to the BES).

~~**4.3.**~~**4.2.5.4** Protection Systems for station service or excitation transformers connected to the generator bus of generators which are part of the BES, that act to trip the generator either directly or via lockout or tripping auxiliary relays.

5. Effective Date: ~~In those jurisdictions where regulatory approval is required, all requirements become effective upon approval. In those jurisdictions where no regulatory approval is required, all requirements become effective upon Board of Trustee's adoption or as otherwise made effective pursuant to the laws applicable to such ERO governmental authorities.~~ See Implementation Plan

B. Requirements

R1. ~~**R1.**~~ Each Transmission Owner, Generator Owner, and ~~any~~ Distribution Provider ~~that owns~~shall establish a ~~transmission~~ Protection System ~~and~~ Maintenance Program (PSMP) for its Protection Systems identified in Section 4.2. *[Violation Risk Factor: Medium] [Time Horizon: Operations Planning]*

> ***Component Type*** *- Any one of the five specific elements of the Protection System definition.*

The PSMP shall:

1.1. Identify which maintenance method (time-based, performance-based per PRC-005 Attachment A, or a combination) is used to address each ~~Generator Owner that owns a generation or generator interconnection Facility~~ Protection System ~~shall have~~Component Type. All batteries associated with the station dc supply Component Type of a Protection System ~~maintenance and testing~~shall be included in a time-based program ~~for~~ as described in Table 1-4 and Table 3.

1.2. Include the applicable monitored Component attributes applied to each Protection ~~Systems~~System Component Type consistent with the maintenance intervals specified in Tables 1-1 through 1-5, Table 2, and Table 3 where monitoring is used to extend the maintenance intervals beyond those specified for unmonitored Protection System Components.

> **Component** – *A component is any individual discrete piece of equipment included in a Protection System, including but not limited to a protective relay or current sensing device. The designation of what constitutes a control circuit component is very dependent upon how an entity performs and tracks the testing of the control circuitry. Some entities test their control circuits on a breaker basis whereas others test their circuitry on a local zone of protection basis. Thus, entities are allowed the latitude to designate their own definitions of control circuit components. Another example of where the entity has some discretion on determining what constitutes a single component is the voltage and current sensing devices, where the entity may choose either to designate a full three-phase set of such devices or a single device as a single component.*

R2. Each Transmission Owner, Generator Owner, and Distribution Provider that ~~affect the reliability of the BES. The~~uses performance-based maintenance intervals in its PSMP shall follow the procedure established in PRC-005 Attachment A to establish and maintain its performance-based intervals. *[Violation Risk Factor: Medium] [Time Horizon: Operations Planning]*

R3. Each Transmission Owner, Generator Owner, and Distribution Provider that utilizes time-based maintenance program(s) shall maintain its Protection System Components that are included within the time-based maintenance program in accordance with the minimum maintenance activities and maximum maintenance intervals prescribed within Tables 1-1 through 1-5, Table 2, and Table 3. *[Violation Risk Factor: High] [Time Horizon: Operations Planning]*

R4. Each Transmission Owner, Generator Owner, and Distribution Provider that utilizes performance-based maintenance program(s) in accordance with Requirement R2 shall implement and follow its PSMP for its Protection System Components that are included within the performance-based program(s). *[Violation Risk Factor: High] [Time Horizon: Operations Planning]*

R5. Each Transmission Owner, Generator Owner, and Distribution Provider shall demonstrate efforts to correct identified Unresolved Maintenance Issues. *[Violation Risk Factor: Medium] [Time Horizon: Operations Planning]*

Unresolved Maintenance Issue - *A deficiency identified during a maintenance activity that causes the component to not meet the intended performance, cannot be corrected during the maintenance interval, and requires follow-up corrective action.*

C. Measures

M1. Each Transmission Owner, Generator Owner and Distribution Provider shall have a documented Protection System Maintenance Program in accordance with Requirement R1.

For each Protection System Component Type, the documentation shall include~~:~~ the type of maintenance method applied (time-based, performance-based, or a combination of these maintenance methods), and shall include all batteries associated with the station dc supply Component Types in a time-based program as described in Table 1-4 and Table 3. (Part 1.1)

~~**R1.1**. Maintenance and testing intervals and their basis.~~

~~**R1.2**. Summary of maintenance and testing procedures.~~

~~**R2.** Each Transmission Owner and any Distribution Provider that owns a transmission Protection System and each Generator Owner that owns a generation or generator interconnection Facility Protection System shall provide documentation of its Protection System maintenance and testing program and the implementation of that program to its Regional Entity on request (within 30 calendar days). The documentation of the program implementation shall include:~~

~~**R2.1.** Evidence Protection System devices were maintained and tested within the defined intervals.~~

~~**R2.2**. Date each Protection System device was last tested/maintained.~~

~~**Measures**~~

~~Each Transmission Owner and any~~ For Component Types that use monitoring to extend the maintenance intervals, the responsible entity(s) shall have evidence for each protection Component Type (such as manufacturer's specifications or engineering drawings) of the appropriate monitored Component attributes as specified in Tables 1-1 through 1-5, Table 2, and Table 3. (Part 1.2)

M2. Each Transmission Owner, Generator Owner, and Distribution Provider that ~~owns a transmission Protection System and each Generator Owner that owns a generation or generator interconnection Facility~~uses performance-based maintenance intervals shall have evidence that its current performance-based maintenance program(s) is in accordance with Requirement R2, which may include but is not limited to Component lists, dated maintenance records, and dated analysis records and results.

M3. Each Transmission Owner, Generator Owner, and Distribution Provider that utilizes time-based maintenance program(s) shall have evidence that it has maintained its Protection System ~~that affects the reliability of the BES, shall have an associated~~ Components included within its time-based program in accordance with Requirement R3. The evidence may include but is not limited to dated maintenance records, dated maintenance summaries, dated check-off lists, dated inspection records, or dated work orders.

~~M1.~~**M4.** Each Transmission Owner, Generator Owner, and Distribution Provider that utilizes performance-based maintenance intervals in accordance with Requirement R2 shall have evidence that it has implemented the Protection System ~~maintenance and testing program as defined in Requirement 1~~Maintenance Program for the Protection System Components included in its performance-based program in accordance with Requirement R4. The evidence may include but is not limited to dated maintenance records, dated maintenance summaries, dated check-off lists, dated inspection records, or dated work orders.

~~M2.~~**M5.** Each Transmission Owner, Generator Owner, and ~~any~~ Distribution Provider ~~that owns a transmission Protection System and each Generator Owner that owns a generation or generator interconnection Facility Protection System that affects the reliability of the BES,~~ shall have evidence that it ~~provided documentation of its associated Protection System maintenance and testing program and the implementation of its program as defined~~has undertaken efforts to correct identified Unresolved Maintenance Issues in accordance with Requirement ~~2~~R5. The evidence may include but is not limited to work orders, replacement Component orders, invoices, project schedules with completed milestones, return material authorizations (RMAs) or purchase orders.

D. Compliance

1. Compliance Monitoring Process

1.1. Compliance ~~Monitoring Responsibility~~Enforcement Authority

Regional Entity~~.~~

1.2. Compliance Monitoring ~~Period~~ and ~~Reset Time Frame~~Enforcement Processes:

~~One calendar year.~~

~~**Data**~~Compliance Audit

Self-Certification

Spot Checking

Compliance Investigation

Self-Reporting

Complaint

1.3. Evidence Retention

The following evidence retention periods identify the period of time an entity is required to retain specific evidence to demonstrate compliance. For instances where the evidence retention period specified below is shorter than the time since the last audit, the Compliance Enforcement Authority may ask an entity to provide other evidence to show that it was compliant for the full time period since the last audit.

The Transmission Owner, Generator Owner, and ~~any~~ Distribution Provider ~~that owns~~ shall each keep data or evidence to show compliance as identified below unless directed by its Compliance Enforcement Authority to retain specific evidence for a ~~transmission~~longer period of time as part of an investigation.

For Requirement R1, the Transmission Owner, Generator Owner, and Distribution Provider shall each keep its current dated Protection System ~~and each Generator Owner that owns a generation or generator interconnection Facility~~Maintenance Program, as well as any superseded versions since the preceding compliance audit, including the documentation that specifies the type of maintenance program applied for each Protection System~~, shall retain evidence of the implementation of its~~ Component Type.

For Requirement R2, Requirement R3, Requirement R4, and Requirement R5, the Transmission Owner, Generator Owner, and Distribution Provider shall each keep documentation of the two most recent performances of each distinct maintenance activity

for the Protection System ~~maintenance and testing program for three years.~~ Component, or all performances of each distinct maintenance activity for the Protection System Component since the previous scheduled audit date, whichever is longer.

The Compliance ~~Monitor shall retain any audit data for three years~~Enforcement Authority shall keep the last audit records and all requested and submitted subsequent audit records.

1.4. Additional Compliance Information

~~The Transmission Owner and any Distribution Provider that owns a transmission Protection System and the Generator Owner that owns a generation or generator interconnection Facility Protection System, shall each demonstrate compliance through self-certification or audit (periodic, as part of targeted monitoring or initiated by complaint or event), as determined by the Compliance Monitor.~~

None.

4.2. Violation Severity Levels (no changes)

Requirement Number	Lower VSL	Moderate VSL	High VSL	Severe VSL
R1	The responsible entity's PSMP failed to specify whether one Component Type is being addressed by time-based or performance-based maintenance, or a combination of both. (Part 1.1) OR The responsible entity's PSMP failed to include applicable station batteries in a time-based program. (Part 1.1)	The responsible entity's PSMP failed to specify whether two Component Types are being addressed by time-based or performance-based maintenance, or a combination of both. (Part 1.1)	The responsible entity's PSMP failed to include the applicable monitoring attributes applied to each Protection System Component Type consistent with the maintenance intervals specified in Tables 1-1 through 1-5, Table 2, and Table 3 where monitoring is used to extend the maintenance intervals beyond those specified for unmonitored Protection System Components. (Part 1.2).	The responsible entity failed to establish a PSMP. OR The responsible entity failed to specify whether three or more Component Types are being addressed by time-based or performance-based maintenance, or a combination of both. (Part 1.1).
R2	The responsible entity uses performance-based maintenance intervals in its PSMP but failed to reduce Countable Events to no more than 4% within three years.	NA	The responsible entity uses performance-based maintenance intervals in its PSMP but failed to reduce Countable Events to no more than 4% within four years.	The responsible entity uses performance-based maintenance intervals in its PSMP but: 1) Failed to establish the technical justification described within Requirement R2 for the initial use of the performance-based PSMP OR 2) Failed to reduce Countable Events to no more than 4% within five years OR 3) Maintained a Segment with less than 60 Components OR 4) Failed to: • Annually update the list of Components, OR

Requirement Number	Lower VSL	Moderate VSL	High VSL	Severe VSL
				• Annually perform maintenance on the greater of 5% of the segment population or 3 Components, OR • Annually analyze the program activities and results for each Segment.
R3	For Protection System Components included within a time-based maintenance program, the responsible entity failed to maintain 5% or less of the total Components included within a specific Protection System Component Type, in accordance with the minimum maintenance activities and maximum maintenance intervals prescribed within Tables 1-1 through 1-5, Table 2, and Table 3.	For Protection System Components included within a time-based maintenance program, the responsible entity failed to maintain more than 5% but 10% or less of the total Components included within a specific Protection System Component Type, in accordance with the minimum maintenance activities and maximum maintenance intervals prescribed within Tables 1-1 through 1-5, Table 2, and Table 3.	For Protection System Components included within a time-based maintenance program, the responsible entity failed to maintain more than 10% but 15% or less of the total Components included within a specific Protection System Component Type, in accordance with the minimum maintenance activities and maximum maintenance intervals prescribed within Tables 1-1 through 1-5, Table 2, and Table 3.	For Protection System Components included within a time-based maintenance program, the responsible entity failed to maintain more than 15% of the total Components included within a specific Protection System Component Type, in accordance with the minimum maintenance activities and maximum maintenance intervals prescribed within Tables 1-1 through 1-5, Table 2, and Table 3.
R4	For Protection System Components included within a performance-based maintenance program, the responsible entity failed to maintain 5% or less of the annual scheduled maintenance for a specific Protection System Component Type in accordance with their performance-based PSMP.	For Protection System Components included within a performance-based maintenance program, the responsible entity failed to maintain more than 5% but 10% or less of the annual scheduled maintenance for a specific Protection System Component Type in accordance with their performance-based PSMP.	For Protection System Components included within a performance-based maintenance program, the responsible entity failed to maintain more than 10% but 15% or less of the annual scheduled maintenance for a specific Protection System Component Type in accordance with their performance-based PSMP.	For Protection System Components included within a performance-based maintenance program, the responsible entity failed to maintain more than 15% of the annual scheduled maintenance for a specific Protection System Component Type in accordance with their performance-based PSMP.
R5	The responsible entity failed to undertake efforts to correct 5 or fewer identified Unresolved	The responsible entity failed to undertake efforts to correct greater than 5, but less than or equal to 10	The responsible entity failed to undertake efforts to correct greater than 10, but less than or equal to 15	The responsible entity failed to undertake efforts to correct greater than 15 identified Unresolved

Requirement Number	Lower VSL	Moderate VSL	High VSL	Severe VSL
	Maintenance Issues.	identified Unresolved Maintenance Issues.	identified Unresolved Maintenance Issues.	Maintenance Issues.

E. Regional ~~Differences~~Variances

None ~~identified.~~

F. Supplemental Reference Document

The following documents present a detailed discussion about determination of maintenance intervals and other useful information regarding establishment of a maintenance program.

1. PRC-005-2 Protection System Maintenance Supplementary Reference and FAQ — July 2012.

Version History

Version	Date	Action	Change Tracking
0	April 1, 2005	Effective Date	New
1	December 1, 2005	1. Changed incorrect use of certain hyphens (-) to "en dash" (–) and "em dash (—)." 2. Added "periods" to items where appropriate. 3. Changed "Timeframe" to "Time Frame" in item D, 1.2.	01/20/05
1a	February 17, 2011	Added Appendix 1 - Interpretation regarding applicability of standard to protection of radially connected transformers	Project 2009-17 interpretation
1a	February 17, 2011	Adopted by Board of Trustees	
1a	September 26, 2011	FERC Order issued approving interpretation of R1 and R2 (FERC's Order is effective as of September 26, 2011)	
1.1a	February 1, 2012	Errata change: Clarified inclusion of generator interconnection Facility in Generator Owner's responsibility	Revision under Project 2010-07
1b	February 3, 2012	FERC Order issued approving interpretation of R1, R1.1, and R1.2 (FERC's Order dated March 14, 2012). Updated version from 1a to 1b.	Project 2009-10 Interpretation
1.1b	April 23, 2012	Updated standard version to 1.1b to reflect FERC approval of PRC-005-1b.	Revision under Project 2010-07

1.1b	May 9, 2012	~~**Adopted**~~PRC-005-1.1b was adopted by the Board of Trustees as part of Project 2010-07 (GOTO).	
2	November7, 2012	Adopted by Board of Trustees	Complete revision, absorbing maintenance requirements from PRC-005-1b, PRC-008-0, PRC-011-0, PRC-017-0

~~Appendix 1~~

Table 1-1 Component Type - Protective Relay Excluding distributed UFLS and distributed UVLS (see Table 3)		
Component Attributes	**Maximum Maintenance Interval**[1]	**Maintenance Activities**
Any unmonitored protective relay not having all the monitoring attributes of a category below.	6 calendar years	Requirement Number For all unmonitored relays: • Verify that settings are as specified For non-microprocessor relays: • Test and Text, if necessary calibrate For microprocessor relays: • Verify operation of Requirement the relay inputs and outputs that are essential to proper functioning of the Protection System. • Verify acceptable measurement of power system input values.

[1] For the tables in this standard, a calendar year starts on the first day of a new year (January 1) after a maintenance activity has been completed. For the tables in this standard, a calendar month starts on the first day of the first month after a maintenance activity has been completed.

Table 1-1 Component Type - Protective Relay Excluding distributed UFLS and distributed UVLS (see Table 3)		
Component Attributes	**Maximum Maintenance Interval**[1]	**Maintenance Activities**
Monitored microprocessor protective relay with the following: • Internal self-diagnosis and alarming (see Table 2). • Voltage and/or current waveform sampling three or more times per power cycle, and conversion of samples to numeric values for measurement calculations by microprocessor electronics. • Alarming for power supply failure (see Table 2).	12 calendar years	~~**R1.** Each Transmission Owner and any Distribution Provider that owns a transmission Protection System and each Generator Owner that owns a generation Protection System shall have a Protection System maintenance and testing program for Protection Systems that affect the reliability of the BES. The program shall include:~~ ~~**R1.1.** Maintenance and testing intervals and their basis.~~ ~~**R1.2.** Summary of maintenance and testing procedures.~~ ~~**R2.** Each Transmission Owner and any Distribution Provider that owns a transmission Protection System and each Generator Owner that owns a generation Protection System shall provide documentation of its Protection System maintenance and testing program and the implementation of that program to its Regional Reliability Organization on request (within 30 calendar days). The documentation of the program implementation shall include:~~ ~~**R2.1** Evidence Protection System devices were maintained and tested within the defined intervals.~~ ~~**R2.2** Date each Protection System device was last tested/maintained.~~Verify: • Settings are as specified. • Operation of the relay inputs and outputs that are essential to proper functioning of the Protection System. • Acceptable measurement of power system input values.

Table 1-1 Component Type - Protective Relay Excluding distributed UFLS and distributed UVLS (see Table 3)		
Component Attributes	Maximum Maintenance Interval[1]	Maintenance Activities
Question:		
Is protection for a radially-connected transformer protection system energized from the BES considered a transmission Protection System subject to this standard?		
Response:		
Monitored microprocessor protective relay with preceding row attributes and the following: • Ac measurements are continuously verified by comparison to an independent ac measurement source, with alarming for excessive error (See Table 2). • Some or all binary or status inputs and control outputs are monitored by a process that continuously demonstrates ability to perform as designed, with alarming for failure (See Table 2). • Alarming for change of settings (See Table 2).	12 calendar years	The request for interpretation of PRC-005-1 Requirements R1 and R2 focuses on the applicability of the term "transmission Protection System." The NERC Glossary of Terms Used in Reliability Standards contains a definition of "Protection System" but does not contain a definition of transmission Protection System. In these two standards, use of the phrase transmission Protection System indicates that the requirements using this phrase are applicable to any Protection System that is installed for the purpose of detecting faults on transmission elements (lines, buses, transformers, etc.) identified as being included in the Bulk Electric System (BES) and trips an interrupting device that interrupts current supplied directly from the BES. A Protection System for a radially connected transformer energized from the BES would be considered a transmission Protection System and subject to these standards only if the protection trips an interrupting device that interrupts current supplied directly from the BES and the transformer is a BES element.Verify only the unmonitored relay inputs and outputs that are essential to proper functioning of the Protection System.

~~Appendix 2~~

Requirement Number and Text of RequirementTable 1-2 Component Type - Communications Systems Excluding distributed UFLS and distributed UVLS (see Table 3)

Component Attributes	~~R1. Each Transmission Owner and any Distribution Provider that owns a transmission Protection System and each Generator Owner that owns a generation Protection System shall have a Protection System maintenance and testing program for Protection Systems that affect the reliability of the BES. The program shall include:~~ ~~R1.1.~~Maximum Maintenance ~~and testing intervals and their basis.~~ ~~R1.2. Summary of maintenance and testing~~	Maintenance Activities

Question:Any unmonitored communications system necessary for correct operation of protective functions, and not having all the monitoring attributes of a category below.	4 calendar months	Verify that the communications system is functional.
	6 calendar years	Does R1 require a maintenanceVerify that the communications system meets performance criteria pertinent to the communications technology applied (e.g. signal level, reflected power, or data error rate). 1. Verify operation of communications system inputs and testing program for the battery chargers for the "station batteries"outputs that are considered partessential to proper functioning of the Protection System? 2. Does R1 require a maintenance and testing program for auxiliary relays and sensing devices? If so, what types of auxiliary relays and sensing devices? (i.e transformer sudden pressure relays) 3. Does R1 require maintenance and testing of transmission line re-closing relays? 4. Does R1 require a maintenance and testing program for the DC circuitry that is just the circuitry with relays and devices that control actions on breakers, etc., or does R1 require a program for the entire circuit from the battery charger to the relays to circuit breakers and all associated wiring? 5. For R1, what are examples of "associated communications systems" that are part of "Protection Systems" that require a maintenance and testing program?.

~~**Response:**~~Any communications system with continuous monitoring or periodic automated testing for the presence of the channel function, and alarming for loss of function (See Table 2).	12 calendar years	Verify that the communications system meets performance criteria pertinent to the communications technology applied (e.g. signal level, reflected power, or data error rate). Verify operation of communications system inputs and outputs that are essential to proper functioning of the Protection System.

1. While battery chargers are vital for ensuring "station batteries" are available to support Protection System functions, they are not identified within the definition of "Protection Systems." Therefore, PRC-005-1 does not require maintenance and testing of battery chargers. 2. The existing definition of "Protection System" does not include auxiliary relays; therefore, maintenance and testing of such devices is not explicitly required. Maintenance and testing of such devices is addressed to the degree that an entity's maintenance and testing program for 3 DC control circuits involves maintenance and testing of imbedded auxiliary relays. Maintenance and testing of devices that respond to quantities other than electrical quantities (for example, sudden pressure relays) are not included within Requirement R1. 3. No. "Protective Relays" refer to devices that detect and take action for abnormal conditions. Automatic restoration of transmission lines is not a "protective" function. 4. PRC-005-1 requires that entities 1) address DC control circuitry within their program, 2) have a basis for the way they address this item, and 3) execute the program. PRC-005-1 does not establish specific additional requirements relative to the scope and/or methods included within the program. 5. "Associated communication systems" refer to communication systems used to convey essential Protection System tripping logic, sometimes referred to as pilot relaying or teleprotection. Examples include the following: • Any communications equipment involved in power-line-carrier relayingsystem with all of the following: • communications equipment involved in various types of permissive protection system applications • direct transfer-trip systems • digital communication systems (which would include the protection system communications functions of standard IEC 618501 as well as various proprietary	12 calendar years	Verify only the unmonitored communications system inputs and outputs that are essential to proper functioning of the Protection System

Table 1-3 Component Type - Voltage and Current Sensing Devices Providing Inputs to Protective Relays Excluding distributed UFLS and distributed UVLS (see Table 3)		
Component Attributes	**Maximum Maintenance Interval**	**Maintenance Activities**
Any voltage and current sensing devices not having monitoring attributes of the category below.	12 calendar years	Verify that current and voltage signal values are provided to the protective relays.
Voltage and Current Sensing devices connected to microprocessor relays with AC measurements are continuously verified by comparison of sensing input value, as measured by the microprocessor relay, to an independent ac measurement source, with alarming for unacceptable error or failure (see Table 2).	No periodic maintenance specified	None.

Table 1-4(a) Component Type – Protection System Station dc Supply Using Vented Lead-Acid (VLA) Batteries Excluding distributed UFLS and distributed UVLS (see Table 3) Protection System Station dc supply used only for non-BES interrupting devices for SPS, non-distributed UFLS systems, or non-distributed UVLS systems is excluded (see Table 1-4(e)).		
Component Attributes	**Maximum Maintenance Interval**	**Maintenance Activities**
Protection System Station dc supply using **Vented Lead-Acid (VLA) batteries** not having monitoring attributes of Table 1-4(f).	4 Calendar Months	Verify: • Station dc supply voltage Inspect: • Electrolyte level • For unintentional grounds
	18 Calendar Months	Verify: • Float voltage of battery charger • Battery continuity • Battery terminal connection resistance • Battery intercell or unit-to-unit connection resistance Inspect: • Cell condition of all individual battery cells where cells are visible – or measure battery cell/unit internal ohmic values where the cells are not visible • Physical condition of battery rack

Table 1-4(a) Component Type – Protection System Station dc Supply Using Vented Lead-Acid (VLA) Batteries Excluding distributed UFLS and distributed UVLS (see Table 3) Protection System Station dc supply used only for non-BES interrupting devices for SPS, non-distributed UFLS systems, or non-distributed UVLS systems is excluded (see Table 1-4(e)).		
Component Attributes	**Maximum Maintenance Interval**	**Maintenance Activities**
	18 Calendar Months -or- 6 Calendar Years	Verify that the station battery can perform as manufactured by evaluating cell/unit measurements indicative of battery performance (e.g. internal ohmic values or float current) against the station battery baseline. -or- Verify that the station battery can perform as manufactured by conducting a performance or modified performance capacity test of the entire battery bank.

Table 1-4(b) Component Type – Protection System Station dc Supply Using Valve-Regulated Lead-Acid (VRLA) Batteries Excluding distributed UFLS and distributed UVLS (see Table 3) Protection System Station dc supply used only for non-BES interrupting devices for SPS, non-distributed UFLS systems, or non-distributed UVLS systems is excluded (see Table 1-4(e)).		
Component Attributes	**Maximum Maintenance Interval**	**Maintenance Activities**
Protection System Station dc supply **with Valve Regulated Lead-Acid (VRLA) batteries** not having monitoring attributes of Table 1-4(f).	4 Calendar Months	Verify: • Station dc supply voltage Inspect: • For unintentional grounds
	6 Calendar Months	Inspect: • Condition of all individual units by measuring battery cell/unit internal ohmic values.
	18 Calendar Months	Verify: • Float voltage of battery charger • Battery continuity • Battery terminal connection resistance • Battery intercell or unit-to-unit connection resistance Inspect: • Physical condition of battery rack

Table 1-4(b) Component Type – Protection System Station dc Supply Using Valve-Regulated Lead-Acid (VRLA) Batteries Excluding distributed UFLS and distributed UVLS (see Table 3) Protection System Station dc supply used only for non-BES interrupting devices for SPS, non-distributed UFLS systems, or non-distributed UVLS systems is excluded (see Table 1-4(e)).		
Component Attributes	**Maximum Maintenance Interval**	**Maintenance Activities**
	6 Calendar Months -or- 3 Calendar Years	Verify that the station battery can perform as manufactured by evaluating cell/unit measurements indicative of battery performance (e.g. internal ohmic values or float current) against the station battery baseline. -or- Verify that the station battery can perform as manufactured by conducting a performance or modified performance capacity test of the entire battery bank.

Table 1-4(c) Component Type – Protection System Station dc Supply Using Nickel-Cadmium (NiCad) Batteries Excluding distributed UFLS and distributed UVLS (see Table 3) Protection System Station dc supply used only for non-BES interrupting devices for SPS, non-distributed UFLS system, or non-distributed UVLS systems is excluded (see Table 1-4(e)).		
Component Attributes	**Maximum Maintenance Interval**	**Maintenance Activities**
Protection System Station dc supply **Nickel-Cadmium (NiCad) batteries** not having monitoring attributes of Table 1-4(f).	4 Calendar Months	Verify: • Station dc supply voltage Inspect: • Electrolyte level • For unintentional grounds
	18 Calendar Months	Verify: • Float voltage of battery charger • Battery continuity • Battery terminal connection resistance • Battery intercell or unit-to-unit connection resistance Inspect: • Cell condition of all individual battery cells. • Physical condition of battery rack
	6 Calendar Years	Verify that the station battery can perform as manufactured by conducting a performance or modified performance capacity test of the entire battery bank.

Table 1-4(d) Component Type – Protection System Station dc Supply Using Non Battery Based Energy Storage Excluding distributed UFLS and distributed UVLS (see Table 3) Protection System Station dc supply used only for non-BES interrupting devices for SPS, non-distributed UFLS system, or non-distributed UVLS systems is excluded (see Table 1-4(e)).		
Component Attributes	**Maximum Maintenance Interval**	**Maintenance Activities**
Any Protection System station dc supply not using a battery and not having monitoring attributes of Table 1-4(f).	4 Calendar Months	Verify: • Station dc supply voltage Inspect: • For unintentional grounds
	18 Calendar Months	Inspect: Condition of non-battery based dc supply
	6 Calendar Years	Verify that the dc supply can perform as manufactured when ac power is not present.

Table 1-4(e) Component Type – Protection System Station dc Supply for non-BES Interrupting Devices for SPS, non-distributed UFLS, and non-distributed UVLS systems		
Component Attributes	**Maximum Maintenance Interval**	**Maintenance Activities**
Any Protection System dc supply used for tripping only non-BES interrupting devices as part of a SPS, non-distributed UFLS, or non-distributed UVLS system and not having monitoring attributes of Table 1-4(f).	When control circuits are verified (See Table 1-5)	Verify Station dc supply voltage.

Table 1-4(f) Exclusions for Protection System Station dc Supply Monitoring Devices and Systems		
Component Attributes	**Maximum Maintenance Interval**	**Maintenance Activities**
Any station dc supply with high and low voltage monitoring and alarming of the battery charger voltage to detect charger overvoltage and charger failure (See Table 2).	No periodic maintenance specified	No periodic verification of station dc supply voltage is required.
Any battery based station dc supply with electrolyte level monitoring and alarming in every cell (See Table 2).		No periodic inspection of the electrolyte level for each cell is required.
Any station dc supply with unintentional dc ground monitoring and alarming (See Table 2).		No periodic inspection of unintentional dc grounds is required.
Any station dc supply with charger float voltage monitoring and alarming to ensure correct float voltage is being applied on the station dc supply (See Table 2).		No periodic verification of float voltage of battery charger is required.
Any battery based station dc supply with monitoring and alarming of battery string continuity (See Table 2).		No periodic verification of the battery continuity is required.
Any battery based station dc supply with monitoring and alarming of the intercell and/or terminal connection detail resistance of the entire battery (See Table 2).		No periodic verification of the intercell and terminal connection resistance is required.
Any Valve Regulated Lead-Acid (VRLA) or Vented Lead-Acid (VLA) station battery with internal ohmic value or float current monitoring and alarming, and evaluating present values relative to baseline internal ohmic values for every cell/unit (See Table 2).		No periodic evaluation relative to baseline of battery cell/unit measurements indicative of battery performance is required to verify the station battery can perform as manufactured.
Any Valve Regulated Lead-Acid (VRLA) or Vented Lead-Acid (VLA) station battery with monitoring and alarming of each cell/unit internal ohmic value (See Table 2).		No periodic inspection of the condition of all individual units by measuring battery cell/unit internal ohmic values of a station VRLA or Vented Lead-Acid (VLA) battery is required.

Table 1-5 Component Type - Control Circuitry Associated With Protective Functions Excluding distributed UFLS and distributed UVLS (see Table 3) **Note:** Table requirements apply to all Control Circuitry Components of Protection Systems, and SPSs except as noted.		
Component Attributes	**Maximum Maintenance Interval**	**Maintenance Activities**
Trip coils or actuators of circuit breakers, interrupting devices, or mitigating devices (regardless of any monitoring of the control circuitry).	6 calendar years	Verify that each trip coil is able to operate the circuit breaker, interrupting device, or mitigating device.
Electromechanical lockout devices which are directly in a trip path from the protective relay to the interrupting device trip coil (regardless of any monitoring of the control circuitry).	6 calendar years	Verify electrical operation of electromechanical lockout devices.
Unmonitored control circuitry associated with SPS.	12 calendar years	Verify all paths of the control circuits essential for proper operation of the SPS.
Unmonitored control circuitry associated with protective functions inclusive of all auxiliary relays.	12 calendar years	Verify all paths of the trip circuits inclusive of all auxiliary relays through the trip coil(s) of the circuit breakers or other interrupting devices.
Control circuitry associated with protective functions and/or SPS whose integrity is monitored and alarmed (See Table 2).	No periodic maintenance specified	None.

Table 2 – Alarming Paths and Monitoring In Tables 1-1 through 1-5 and Table 3, alarm attributes used to justify extended maximum maintenance intervals and/or reduced maintenance activities are subject to the following maintenance requirements		
Component Attributes	**Maximum Maintenance Interval**	**Maintenance Activities**
Any alarm path through which alarms in Tables 1-1 through 1-5 and Table 3 are conveyed from the alarm origin to the location where corrective action can be initiated, and not having all the attributes of the "Alarm Path with monitoring" category below. Alarms are reported within 24 hours of detection to a location where corrective action can be initiated.	12 Calendar Years	Verify that the alarm path conveys alarm signals to a location where corrective action can be initiated.
Alarm Path with monitoring: The location where corrective action is taken receives an alarm within 24 hours for failure of any portion of the alarming path from the alarm origin to the location where corrective action can be initiated.	No periodic maintenance specified	None.

Table 3 Maintenance Activities and Intervals for distributed UFLS and distributed UVLS Systems		
Component Attributes	**Maximum Maintenance Interval**	**Maintenance Activities**
Any unmonitored protective relay not having all the monitoring attributes of a category below.	6 calendar years	Verify that settings are as specified For non-microprocessor relays: • Test and, if necessary calibrate For microprocessor relays: • Verify operation of the relay inputs and outputs that are essential to proper functioning of the Protection System. • Verify acceptable measurement of power system input values.
Monitored microprocessor protective relay with the following: • Internal self diagnosis and alarming (See Table 2). • Voltage and/or current waveform sampling three or more times per power cycle, and conversion of samples to numeric values for measurement calculations by microprocessor electronics. Alarming for power supply failure (See Table 2).	12 calendar years	Verify: • Settings are as specified. • Operation of the relay inputs and outputs that are essential to proper functioning of the Protection System. • Acceptable measurement of power system input values
Monitored microprocessor protective relay with preceding row attributes and the following: • Ac measurements are continuously verified by comparison to an independent ac measurement source, with alarming for excessive error (See Table 2). • Some or all binary or status inputs and control outputs are monitored by a process that continuously demonstrates ability to perform as designed, with alarming for failure (See Table 2).	12 calendar years	Verify only the unmonitored relay inputs and outputs that are essential to proper functioning of the Protection System.

Table 3 Maintenance Activities and Intervals for distributed UFLS and distributed UVLS Systems		
Component Attributes	**Maximum Maintenance Interval**	**Maintenance Activities**
Alarming for change of settings (See Table 2).		
Voltage and/or current sensing devices associated with UFLS or UVLS systems.	12 calendar years	Verify that current and/or voltage signal values are provided to the protective relays.
Protection System dc supply for tripping non-BES interrupting devices used only for a UFLS or UVLS system.	12 calendar years	Verify Protection System dc supply voltage.
Control circuitry between the UFLS or UVLS relays and electromechanical lockout and/or tripping auxiliary devices (excludes non-BES interrupting device trip coils).	12 calendar years	Verify the path from the relay to the lockout and/or tripping auxiliary relay (including essential supervisory logic).
Electromechanical lockout and/or tripping auxiliary devices associated only with UFLS or UVLS systems (excludes non-BES interrupting device trip coils).	12 calendar years	Verify electrical operation of electromechanical lockout and/or tripping auxiliary devices.
Control circuitry between the electromechanical lockout and/or tripping auxiliary devices and the non-BES interrupting devices in UFLS or UVLS systems, or between UFLS or UVLS relays (with no interposing electromechanical lockout or auxiliary device) and the non-BES interrupting devices (excludes non-BES interrupting device trip coils).	No periodic maintenance specified	None.
Trip coils of non-BES interrupting devices in UFLS or UVLS systems.	No periodic maintenance specified	None.

PRC-005 — Attachment A

Criteria for a Performance-Based Protection System Maintenance Program

Purpose: To establish a technical basis for initial and continued use of a performance-based Protection System Maintenance Program (PSMP).

To establish the technical justification for the initial use of a performance-based PSMP:

1. Develop a list with a description of Components included in each designated Segment of the Protection System Component population, with a minimum **Segment** population of 60 Components.
2. Maintain the Components in each Segment according to the time-based maximum allowable intervals established in Tables 1-1 through 1-5 and Table 3 until results of maintenance activities for the Segment are available for a minimum of 30 individual Components of the Segment.

> **Segment** – *Protection Systems or components of a consistent design standard, or a particular model or type from a single manufacturer that typically share other common elements. Consistent performance is expected across the entire population of a Segment. A Segment must contain at least sixty (60) individual components.*

3. Document the maintenance program activities and results for each Segment, including maintenance dates and Countable Events for each included Component.
4. Analyze the maintenance program activities and results for each Segment to determine the overall performance of the Segment and develop maintenance intervals.
5. Determine the maximum allowable maintenance interval for each Segment such that the Segment experiences **Countable Events** on no more than 4% of the Components within the Segment, for the greater of either the last 30 Components maintained or all Components maintained in the previous year.

> **Countable Event** – *A failure of a component requiring repair or replacement, any condition discovered during the maintenance activities in Tables 1-1 through 1-5 and Table 3 which requires corrective action, or a Misoperation attributed to hardware failure or calibration failure. Misoperations due to product design errors, software errors, relay settings different from specified settings, Protection System component configuration errors, or Protection System application errors are not included in Countable Events.*

To maintain the technical justification for the ongoing use of a performance-based PSMP:

1. At least annually, update the list of Protection System Components and Segments and/or description if any changes occur within the Segment.
2. Perform maintenance on the greater of 5% of the Components (addressed in the performance based PSMP) in each Segment or 3 individual Components within the Segment in each year.
3. For the prior year, analyze the maintenance program activities and results for each Segment to determine the overall performance of the Segment.

4. Using the prior year's data, determine the maximum allowable maintenance interval for each Segment such that the Segment experiences Countable Events on no more than 4% of the Components within the Segment, for the greater of either the last 30 Components maintained or all Components maintained in the previous year.
5. If the Components in a Protection System Segment maintained through a performance-based PSMP experience 4% or more Countable Events, develop, document, and implement an action plan to reduce the Countable Events to less than 4% of the Segment population within 3 years.

Exhibit C

Implementation Plan for Proposed Reliability Standard PRC-005-2

NERC
NORTH AMERICAN ELECTRIC
RELIABILITY CORPORATION

Implementation Plan

Project 2007-17 Protection Systems Maintenance and Testing
PRC-005-02

Standards Involved
Approval:

- PRC-005-2 – Protection System Maintenance (PRC-005-2)

Retirements:

- PRC-005-1b – Transmission and Generation Protection System Maintenance and Testing (PRC-005-1b)
- PRC-008-0 – Implementation and Documentation of Underfrequency Load Shedding Equipment Maintenance Program (PRC-008-0)
- PRC-011-0 – Undervoltage Load Shedding System Maintenance and Testing (PRC-011-0)
- PRC-017-0 – Special Protection System Maintenance and Testing (PRC-017-0)

Prerequisite Approvals:
Revised definition of "Protection System."

Background:
The Implementation Plan reflects consideration of the following:

1. The requirements set forth in the proposed standard establish minimum maintenance activities for Protection System component types and the maximum allowable maintenance intervals for these maintenance activities. The maintenance activities established may not be presently performed by some entities and the established maximum allowable intervals may be shorter than those currently in use by some entities.
2. For entities not presently performing a maintenance activity or using longer intervals than the maximum allowable intervals established in the proposed standard, it is unrealistic for those entities to be immediately compliant with the new activities or intervals. Further, entities should be allowed to become compliant in such a way as to facilitate a continuing maintenance program.
3. Entities that have previously been performing maintenance within the newly specified intervals may not have all the documentation needed to demonstrate compliance with all of the maintenance activities specified.

4. The Implementation Schedule set forth in this document requires that entities develop their revised Protection System Maintenance Program within twelve (12) months following applicable regulatory approvals, or in those jurisdictions where no regulatory approval is required, on the first day of the first calendar quarter twenty-four (24) months following NERC Board of Trustees adoption. This anticipates that it will take approximately twelve (12) months to achieve regulatory approvals following adoption by the NERC Board of Trustees.
5. The Implementation Schedule set forth in this document facilitates implementation of the more lengthy maintenance intervals within the revised Protection System Maintenance Program in approximately equally-distributed steps over those intervals prescribed for each respective maintenance activity in order that entities may implement this standard in a systematic method that facilitates an effective ongoing Protection System Maintenance Program.

General Considerations:

Each Transmission Owner, Generator Owner, and Distribution Provider shall maintain documentation to demonstrate compliance with PRC-005-1b, PRC-008-0, PRC-011-0, and PRC-017-0 until that entity meets the requirements of PRC-005-2 in accordance with this implementation plan. Each entity shall be responsible for maintaining each of their Protection System components according to their maintenance program already in place for the legacy standards (PRC-005-1b, PRC-008-0, PRC-011-0, and PRC-017-0) or according to their maintenance program for PRC-005-2, but not both. Once an entity has designated PRC-005-2 as its maintenance program for specific Protection System components, they cannot revert to the original program for those components.

While entities are transitioning to the requirements of PRC-005-2, each entity must be prepared to identify:

- All of its applicable Protection System components.
- Whether each component has last been maintained according to PRC-005-2 or under PRC-005-1b, PRC-008-0, PRC-011-0, or PRC-017-0.

For activities being added to an entity's program as part of PRC-005-2 implementation, evidence may be available to show only a single performance of the activity until two maintenance intervals have transpired following initial implementation of PRC-005-2.

Retirement of Existing Standards:

Standards PRC-005-1b, PRC-008-0, PRC-011-0, and PRC-017-0, which are being replaced by PRC-005-2, shall remain active throughout the phased implementation period of PRC-005-2 and shall be applicable to an entity's Protection System component maintenance activities not yet transitioned to PRC-005-2. Standards PRC-005-1b, PRC-008-0, PRC-011-0, and PRC-017-0 shall be retired at midnight of the day immediately prior to the first day of the first calendar quarter one hundred fifty-six (156) months following applicable regulatory approval, or in those jurisdictions where no regulatory approval is

required, at midnight of the day immediately prior to the first day of the first calendar quarter one hundred sixty-eight (168) months following NERC Board of Trustees adoption.

Implementation Plan for Definition:

Protection System Maintenance Program – Entities shall use this definition when implementing any portions of R1, R2 R3, R4 and R5 which use this defined term.

Implementation Plan for Requirements R1, R2 and R5:

Entities shall be 100% compliant on the first day of the first calendar quarter twelve (12) months following applicable regulatory approvals, or in those jurisdictions where no regulatory approval is required, on the first day of the first calendar quarter twenty-four (24) months following NERC Board of Trustees adoption or as otherwise made effective pursuant to the laws applicable to such ERO governmental authorities.

Implementation Plan for Requirements R3 and R4:

1. For Protection System component maintenance activities with maximum allowable intervals of less than one (1) calendar year, as established in Tables 1-1 through 1-5:
   - The entity shall be 100% compliant with PRC-005-2 on the first day of the first calendar quarter eighteen (18) months following applicable regulatory approval, or in those jurisdictions where no regulatory approval is required, on the first day of the first calendar quarter thirty (30) months following NERC Board of Trustees adoption or as otherwise made effective pursuant to the laws applicable to such ERO governmental authorities.
2. For Protection System component maintenance activities with maximum allowable intervals one (1) calendar year or more, but two (2) calendar years or less, as established in Tables 1-1 through 1-5:
   - The entity shall be 100% compliant with PRC-005-2 on the first day of the first calendar quarter thirty-six (36) months following applicable regulatory approval, or in those jurisdictions where no regulatory approval is required, on the first day of the first calendar quarter forty-eight (48) months following NERC Board of Trustees adoption or as otherwise made effective pursuant to the laws applicable to such ERO governmental authorities.
3. For Protection System component maintenance activities with maximum allowable intervals of three (3) calendar years, as established in Tables 1-1 through 1-5:
   - The entity shall be at least 30% compliant with PRC-005-2 on the first day of the first calendar quarter twenty-four (24) months following applicable regulatory approval (or, for generating plants with scheduled outage intervals exceeding two years, at the conclusion of the first succeeding maintenance outage), or in those jurisdictions where no regulatory approval is required, on the first day of the first calendar quarter thirty-six (36) months following NERC Board of Trustees adoption or as otherwise made effective pursuant to the laws applicable to such ERO governmental authorities.
   - The entity shall be at least 60% compliant with PRC-005-2 on the first day of the first calendar quarter thirty-six (36) months following applicable regulatory approval, or in those jurisdictions where no regulatory approval is required, on the first day of the first calendar quarter forty-eight (48) months following NERC Board of Trustees adoption or as otherwise made effective pursuant to the laws applicable to such ERO governmental authorities.

- The entity shall be 100% compliant with PRC-005-2 on the first day of the first calendar quarter forty-eight (48) months following applicable regulatory approval, or in those jurisdictions where no regulatory approval is required, on the first day of the first calendar quarter sixty (60) months following NERC Board of Trustees adoption or as otherwise made effective pursuant to the laws applicable to such ERO governmental authorities.

4. For Protection System component maintenance activities with maximum allowable intervals of six (6) calendar years, as established in Tables 1-1 through 1-5 and Table 3:

   - The entity shall be at least 30% compliant with PRC-005-2 on the first day of the first calendar quarter thirty-six (36) months following applicable regulatory approval (or, for generating plants with scheduled outage intervals exceeding three years, at the conclusion of the first succeeding maintenance outage), or in those jurisdictions where no regulatory approval is required, on the first day of the first calendar quarter forty-eight (48) months following NERC Board of Trustees adoption or as otherwise made effective pursuant to the laws applicable to such ERO governmental authorities.
   - The entity shall be at least 60% compliant with PRC-005-2 on the first day of the first calendar quarter sixty (60) months following applicable regulatory approval, or in those jurisdictions where no regulatory approval is required, on the first day of the first calendar quarter seventy-two (72) months following NERC Board of Trustees adoption or as otherwise made effective pursuant to the laws applicable to such ERO governmental authorities.
   - The entity shall be 100% compliant with PRC-005-2 on the first day of the first calendar quarter eighty-four (84) months following applicable regulatory approval, or in those jurisdictions where no regulatory approval is required, on the first day of the first calendar quarter ninety-six (96) months following NERC Board of Trustees adoption or as otherwise made effective pursuant to the laws applicable to such ERO governmental authorities.

5. For Protection System component maintenance activities with maximum allowable intervals of twelve (12) calendar years, as established in Tables 1-1 through 1-5, Table 2, and Table 3:

   - The entity shall be at least 30% compliant with PRC-005-2 on the first day of the first calendar quarter sixty (60) months following applicable regulatory approval, or in those jurisdictions where no regulatory approval is required, on the first day of the first calendar quarter seventy-two (72) months following NERC Board of Trustees adoption or as otherwise made effective pursuant to the laws applicable to such ERO governmental authorities.
   - The entity shall be at least 60% compliant with PRC-005-2 on the first day of the first calendar quarter following one hundred eight (108) months following applicable regulatory approval, or in those jurisdictions where no regulatory approval is required, on the first day of the first calendar quarter one hundred twenty (120) months following NERC Board of Trustees adoption or as otherwise made effective pursuant to the laws applicable to such ERO governmental authorities.

- The entity shall be 100% compliant with PRC-005-2 on the first day of the first calendar quarter one hundred fifty-six (156) months following applicable regulatory approval, or in those jurisdictions where no regulatory approval is required, on the first day of the first calendar quarter one hundred sixty-eight (168) months following NERC Board of Trustees adoption or as otherwise made effective pursuant to the laws applicable to such ERO governmental authorities.

Applicability:
This standard applies to the following functional entities:

- Transmission Owner
- Generator Owner
- Distribution Provider

Exhibit D

Technical Justification: PRC-005-2 Protection System Maintenance

Technical Justification

PRC-005-2 Protection System Maintenance

The purpose of the proposed PRC-005-2 Reliability Standard is to document and implement programs for the maintenance of all Protection Systems affecting the reliability of the Bulk Electric System (BES) so that these Protection Systems are kept in working order. The proposed Reliability Standard further combines the legacy Reliability Standards PRC-005-1, PRC-008-0, PRC-011-0, and PRC-017-0, as these legacy Reliability Standards have similar reliability goals and requirements. This purpose is consistent with NERC's goal to create and implement reliability standards that enable or support at least one of the eight, defined Reliability Principles. The requirements of the proposed PRC-005-1 Reliability Standard directly support the following Reliability Principles:

> Reliability Principle 1 – Interconnected bulk power systems shall be planned and operated in a coordinated manner to perform reliably under normal and abnormal conditions as defined in the NERC Standards.
>
> Reliability Principle 7 – The reliability of the interconnected bulk power systems shall be assessed, monitored, and maintained on a wide-area basis.

The existing PRC-005-1, PRC-008-0, PRC-011-0, and PRC-017-0 Reliability Standards, as assessed by the NERC System Protection and Control Task Force (SPCTF) in its report of March 8, 2007, contain several fundamental flaws within the requirements. Within this assessment, the SPCTF asserts, for all four standards, that:

> *"The listed requirements do not provide clear and sufficient guidance concerning the maintenance and testing of the Protection Systems to achieve the commonly stated purpose which is "To ensure all transmission and generation Protection Systems affecting the reliability of the Bulk Electric System (BES) are maintained and tested.""*

And further recommends that:

- *"The standards should clearly state which power system elements are being addressed."*
- *"The requirements should reflect the inherent differences between different technologies of protection systems."*
- *"The terms maintenance programs and testing programs should be clearly defined in the glossary. The terms "maintenance" and "testing" are not interchangeable, and the requirements must be clear in their application. Additional terms may also have to be added to the glossary for clarity."*
- *"The requirements of the existing standards, as stated, support time-based maintenance and testing, and should be expanded to include condition-based and performance-based maintenance and testing. The R1.2 summary of maintenance and testing procedures needs to*

have some minimum defined sub-requirements to insure that the stated intent of the standards is met to support review by the compliance monitor," and

- *The SPCTF recommends that standards PRC-005-1, PRC-008-0, PRC-011-0, and PRC-017-0 … be included in a new Standard Authorization Request for a single Protection System maintenance and testing standard.*

Relative to PRC-005-1, the Federal Energy Regulatory Commission (FERC), in Order 693 further directed in paragraph 1476:

"… the Commission directs the ERO to develop a modification to PRC–005–1 through the Reliability Standards development process that includes a requirement that maintenance and testing of a protection system must be carried out within a maximum allowable interval that is appropriate to the type of the protection system and its impact on the reliability of the Bulk-Power System. We further direct the ERO to consider FirstEnergy's and ISO–NE's suggestion to combine PRC–005–1, PRC–008–0, PRC–011–0, and PRC–017–0 into a single Reliability Standard through the Reliability Standards development process."

FERC offered, in paragraphs 1492, 1517, and 1547, similar directives regarding PRC-008-0, PRC-011-0, and PRC-017-0, respectively.

With the development of the proposed PRC-005-2 Reliability Standard, the drafting team for Project 2007-17 – Protection System Maintenance, has followed the observations and recommendation of the NERC SPCTF assessment of PRC-005-1, PRC-008-0, PRC-011-0, and PRC-017-0 including addressing FERC's directives from Order 693. The drafting team accomplishes this by:

1. Merging the reliability objectives of the four legacy standards.
2. Establishing minimum acceptable maintenance activities and accompanying maximum allowable maintenance intervals, reflecting various technologies of the components being addressed.
3. Providing entities the flexibility to implement condition-based maintenance by adjusting the minimum acceptable maintenance activities and maximum allowable maintenance intervals to reflect condition monitoring of the various Protection System components, and
4. Providing requirements for effective implementation of a performance-based maintenance program.

The proposed PRC-005-2 Reliability Standard includes five requirements that:

1. Combines the reliability goals of developing detailed tables of minimum maintenance activities and maximum maintenance intervals for all five component types addressed within the NERC definition of Protection System. These tables include adjustments to those activities and intervals to reflect the benefits of any condition monitoring that may be present.

2. Requires, within Requirement R1, that entities using a time-based maintenance program (which includes condition-based maintenance) shall establish a Protection System Maintenance Program (PSMP) that conforms to the tables described above.
3. Establishes, within Requirement R2, the opportunity and requirements for establishment of a performance-based maintenance program for those entities that have (or wish to develop) sufficient performance observations for their Protection System components such that they may determine maintenance intervals other than those specified within the tables while maintaining the level of reliability prescribed within the Standard.
4. Requires, within Requirements R3 and R4, that entities fully implement their PSMP as determined pursuant to Requirement R1 for time-based maintenance programs and Requirement R2 for performance-based maintenance programs, respectively.
5. Further requires, within Requirement R5, that entities initiate resolution of any issues discovered during maintenance that cause the entities to be unable to return the associated components to good working order. The drafting team elected to not require that entities complete the resolution of these issues, as the time required to effectively resolve the problems may vary widely depending on the scope of that resolution.

The proposed PRC-005-2 Reliability Standard provides a comprehensive set of requirements and associated information (within the tables) that define a strong PSMP. Entities that monitor the actual condition of their Protection System components are further empowered to utilize the monitoring to improve the efficiency and effectiveness of their PSMP, and those entities that have extensive performance data regarding their Protection System components to utilize that performance data to further improve the efficiency and effectiveness of their PSMP.

Requirement R1:

R1. Each Transmission Owner, Generator Owner, and Distribution Provider shall establish a Protection System Maintenance Program (PSMP) for its Protection Systems identified in Section 4.2. *[Violation Risk Factor: Medium] [Time Horizon: Operations Planning]*

The PSMP shall:

1.1. Identify which maintenance method (time-based, performance-based per PRC-005 Attachment A, or a combination) is used to address each Protection System Component Type. All batteries associated with the station dc supply Component Type of a Protection System shall be included in a time-based program as described in Table 1-4 and Table 3.

1.2. Include the applicable monitored Component attributes applied to each Protection System Component Type consistent with the maintenance intervals specified in Tables 1-1 through 1-5, Table 2, and Table 3 where monitoring is used to extend the maintenance intervals beyond those specified for unmonitored Protection System Components.

Background and Rationale

Establishment of a Protection System Maintenance Program as directed by Requirement R1 is needed to detect and correct plausible age- and service-related degradation of Protection System components. It is important that a Protection System continue to function as designed over its service life to ensure reliability of the Bulk Electric System.

Requirement R1 establishes that entities develop a comprehensive maintenance program for Protection System components addressing the elements specified in the Protection System Maintenance Program definition:

Protection System Maintenance Program (PSMP) — An ongoing program by which Protection System components are kept in working order and proper operation of malfunctioning components is restored. A maintenance program for a specific component includes one or more of the following activities:

- Verify — Determine that the component is functioning correctly.
- Monitor — Observe the routine in-service operation of the component.
- Test — Apply signals to a component to observe functional performance or output behavior, or to diagnose problems.
- Inspect — Examine for signs of component failure, reduced performance and degradation.
- Calibrate — Adjust the operating threshold or measurement accuracy of a measuring element to meet the intended performance requirement.

Maintenance and testing programs often incorporate the following types of maintenance practices:

- TBM – time-based maintenance – externally prescribed maximum maintenance or testing intervals are applied for components or groups of components. The intervals may have been developed from prior experience or manufacturers' recommendations. The TBM verification interval is based on a variety of factors, including experience of the particular asset owner, collective experiences of several asset owners who are members of a country or regional council, etc. The maintenance intervals are fixed, and may range in number of months or in years.

  TBM can include review of recent power system events near the particular terminal. Operating records may verify that some portion of the Protection System has operated correctly since the last test occurred. If specific protection scheme components have demonstrated correct performance within specifications, the maintenance test time clock can be reset for those components.

- PBM – performance-based maintenance - intervals are established based on analytical or historical results of TBM failure rates on a statistically significant population of similar components. Some level of TBM is generally followed. Statistical analyses accompanied by adjustments to maintenance intervals are used to justify continued use of PBM-developed extended intervals when test failures or in-service failures occur infrequently.

  The Performance Based Maintenance (PBM) program ensures no more than a 4% failure rate for each segment of a component type. There could be more or less than 4 failures per year depending on the population size of the segment. The 4% number was developed using the following:

  General experience of the drafting team based on open discussions of past performance.

  Test results provided by Consumers Energy for the years 1998-2008 showing a yearly average of 7.5% out-of-tolerance relay test results and a yearly average of 1.5% defective rate.

  Two failure analysis reports from Tennessee Valley Authority (TVA) where TVA identified problematic equipment based on a noticeably higher failure of a certain relay type (failure rate of 2.5%) and voltage transformer type (failure rate of 3.6%).

  Refer to Supplementary Reference and FAQ Document - Section 9.1 for a discussion and examples for the application of the 4% failure rate.

- CBM – condition-based maintenance – continuously or frequently reported results from non-disruptive self monitoring of components demonstrate operational status as those components remain in service. Whatever is verified by CBM does not require manual testing, but taking advantage of this requires precise technical focus on exactly what parts are included as part of the self diagnostics. While the term "Condition-Based-Maintenance" (CBM) is no longer used within the Standard itself, it is important to note that the concepts of CBM are a part of the Standard (in the form of extended time intervals through status-monitoring). These extended time intervals are only allowed (in the absence of PBM) if the condition of the device is monitored (CBM). As a consequence of the "monitored-basis-time-intervals" existing within the

Standard, the explanatory discussions within the Supplementary Reference and FAQ Document concerned with CBM will remain and are discussed as CBM.

A key feature of condition-based monitoring is that it effectively reduces the time delay between the moment of a protection failure and time the protection system owner knows about it, for the monitored segments of the protection system. In some cases, the verification is practically continuous - the time interval between verifications is minutes or seconds. Thus, technically sound, condition-based verification, meets the directives of FERC Order 693 even more effectively than the strictly time-based tests of the same system components while minimizing the potential for human performance errors during maintenance activities.

Microprocessor based Protection System components that perform continuous self-monitoring verify correct operation of most components within the device. Self-monitoring capabilities may include battery continuity, float voltages, unintentional grounds, the ac signal inputs to a relay, analog measuring circuits, processors and memory for measurement, protection, and data communications, trip circuit monitoring, and protection or data communications signals (and many, many more measurements). For those conditions, failure of a self-monitoring routine generates an alarm and may inhibit operation to avoid false trips. When internal components, such as critical output relay contacts, are not equipped with self-monitoring, they can be manually tested. The method of testing may be local or remote, or through inherent performance of the scheme during a system event.

TBM, PBM, and CBM can be combined for individual components, or within a complete Protection System. The following diagram illustrates the relationship between various types of maintenance practices described in this section. In the Venn diagram the overlapping regions show the relationship of TBM with PBM historical information and the inherent continuous monitoring offered through CBM.

This figure shows:

- Region 1: The TBM intervals that are increased based on known reported operational condition of individual components that are monitoring themselves.
- Region 2: The TBM intervals that are adjusted up or down based on results of analysis of maintenance history of statistically significant population of similar products that have been subject to TBM.
- Region 3: Optimal TBM intervals based on regions 1 and 2.

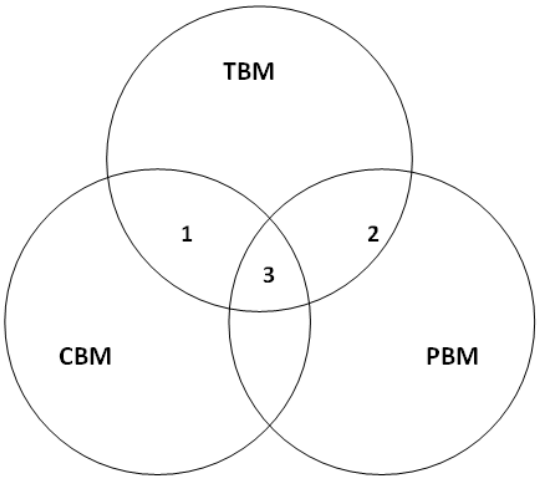

Relationship of time-based maintenance types

The PSMP shall:

R1, Part 1.1 Identify which maintenance method (time-based, performance-based per PRC-005 Attachment A, or a combination) is used to address each Protection System component type.

Requirement R1, Part 1.1 gives entities the flexibility to choose between the various methods listed above to maintain their Protection System equipment.

All batteries associated with the station dc supply Component Type of a Protection System shall be included in a time-based program as described in Table 1-4 and Table 3.

Batteries are the only element of a Protection System that is a perishable item with a shelf life. As a perishable item batteries require not only a constant float charge to maintain their freshness (charge), but periodic inspection to determine if there are problems associated with their aging process and testing to see if they are maintaining a charge or can still deliver their rated output as required.

Besides being perishable, a second unique feature of a battery that is unlike any other Protection System element is that a battery uses chemicals, metal alloys, plastics, welds, and bonds that must interact with each other to produce the constant dc source required for Protection Systems, undisturbed by ac system disturbances.

No type of battery manufactured today for Protection System application is free from problems that can only be detected over time by inspection and test. These problems can arise from variances in the manufacturing process, chemicals and alloys used in the construction of the individual cells, quality of welds and bonds to connect the components, the plastics used to make batteries and the cell forming process for the individual battery cells.

Other problems that require periodic inspection and testing can result from transportation from the factory to the job site, length of time before a charge is put on the battery, the method of installation, the voltage level and duration of equalize charges, the float voltage level used, and the environment that the battery is installed in.

All of the above mentioned factors and several more not discussed here are beyond the control of the Functional Entities that want to use a performance-based maintenance (PBM) program for its Protection Systems. These inherent variances in the aging process of a battery cell make establishment of a designated segment based on manufacturer and type of battery impossible.

Requirement R1, Part 1.2 Include the applicable monitored Component attributes applied to each Protection System Component Type consistent with the maintenance intervals specified in Tables 1-

1 through 1-5, Table 2, and Table 3 where monitoring is used to extend the maintenance intervals beyond those specified for unmonitored Protection System Components.

It is necessary for entities to specify the monitoring attributes utilized in their PSMP to demonstrate the existence of the monitoring elements which permit using the extended maintenance intervals established in Tables 1-1 through 1-5, Table 2, and Table 3 of the standard.

All maintenance is fundamentally time-based. Default time-based intervals are commonly established to assure proper functioning of each component of the Protection System, when data on the reliability of the components is not available other than observations from time-based maintenance. Excessive maintenance can actually decrease the reliability of the component or system. It is not unusual to cause failure of a component by removing it from service and restoring it. The improper application of test signals may cause failure of a component. Making use of the extended intervals by employing component monitoring minimizes human performance errors. The following factors may influence the established default intervals:

- If continuous indication of the functional condition of a component is available (from relays or chargers or any self monitoring device), then the intervals may be extended or manual testing may be eliminated. This is referred to as condition-based maintenance or CBM. CBM is valid only for precisely the components subject to monitoring. In the case of microprocessor-based relays, self-monitoring may not include automated diagnostics of every component within a microprocessor.
- Previous maintenance history for a group of components of a common type may indicate that the maintenance intervals can be extended while still achieving the desired level of performance. This is referred to as performance-based maintenance or PBM. It is also sometimes referred to as reliability-centered maintenance or RCM, but PBM is used in this document.
- Observed proper operation of a component may be regarded as a maintenance verification of the respective component or element in a microprocessor-based device. For such an observation, the maintenance interval may be reset only to the degree that can be verified by data available on the operation. For example, the trip of an electromechanical relay for a fault verifies the trip contact and trip path, but only through the relays in series that actually operated; one operation of this relay cannot verify correct calibration.

Requirement R2:

Overview

Requirement 2, stated below, deals with performance based maintenance. The requirement refers to Attachment A. Rather than simply list Attachment A, the requirements of Attachment A are listed below with a technical justification discussion for each. The criteria within Attachment A are largely based on application of statistical analysis theory.

Requirement R2

Requirement R2. Each Transmission Owner, Generator Owner, and Distribution Provider that uses performance-based maintenance intervals in its PSMP shall follow the procedure established in PRC-005 Attachment A to establish and maintain its performance-based intervals. *[Violation Risk Factor: Medium] [Time Horizon: Operations Planning]*

Background and Rationale

Performance-based maintenance (PBM) is included in PRC-005-2 to allow utilities to adjust maintenance intervals based on their individual experience with equipment types and manufacturer. The utility must create a segment of components with similar manufacturer and model characteristics of statistically significant size.

Segment – *Protection Systems or components of a consistent design standard, or a particular model or type from a single manufacturer that typically share other common elements. Consistent performance is expected across the entire population of a segment. A segment must contain at least sixty (60) individual components.*

Based on equipment failure(s) and out-of-tolerance(s), called Countable Events, in any given year, the utility then sets its maintenance interval to keep the Countable Events below 4%. Performance-based maintenance is discussed at length in Section 9.1 of the Supplementary Reference and FAQ Document for PRC-005-2. Many of the technical justifications shown below come from the Supplementary Reference and FAQ Document. Each criterion of Attachment A is individually discussed.

Countable Event – *A failure of a component requiring repair or replacement, any condition discovered during the maintenance activities in Tables 1-1 through 1-5 and Table 3 which requires corrective action, or a Misoperation attributed to hardware failure or calibration failure. Misoperations due to product design errors, software errors, relay settings different from specified settings, Protection System component configuration errors, or Protection System application errors are not included in Countable Events.*

1. Develop a list with a description of Components included in each designated Segment of the Protection System Component population, with a minimum Segment population of 60 Components.

   A sample size requirement can be estimated using the bound on the Error of

Distribution Formula when the expected result is of a "Pass/Fail" format and will be between 0 and 1.0.

The Error of Distribution Formula is:

$$B = z\sqrt{\frac{\pi(1-\pi)}{n}}$$

Where:

B = bound on the error of distribution (allowable error)

z = standard error

π = expected failure rate

n = sample size required

Solving for n provides:

$$n = \pi(1-\pi)\left(\frac{z}{B}\right)^2$$

One entity's population of components should be large enough to represent a sizeable sample of a vendor's overall population of manufactured devices. For this reason the following assumptions are made:
B = 5%
z = 1.96 (This equates to a 95% confidence level)
π = 4% (see number 5 below)
Using the equation above, n=59.0. The Standard Drafting Team chose to use the round number of 60 for the requirement.

2. Maintain the Components in each Segment according to the time-based maximum allowable intervals established in Tables 1-1 through 1-5 and Table 3 until results of maintenance activities for the Segment are available for a minimum of 30 individual Components of the Segment.

   An assumption that needs to be made when choosing a sample size is "the sampling distribution of the sample mean can be approximated by a normal probability distribution." The Central Limit Theorem states: "In selecting simple random samples of size *n* from a population, the sampling distribution of the sample mean *x* can be approximated by a normal probability distribution as the sample size becomes large." (Essentials of Statistics for Business and Economics, Anderson, Sweeney, Williams, 2003)

To use the Central Limit Theorem in statistics, the population size should be large. The references below are supplied to help define what is large.

> "… whenever we are using a large simple random sample (rule of thumb: n>=30), the central limit theorem enables us to conclude that the sampling distribution of the sample mean can be approximated by a normal distribution." (Essentials of Statistics for Business and Economics, Anderson, Sweeney, Williams, 2003)
>
> "If samples of size n, when n>=30, are drawn from any population with a mean *u* and a standard deviation σ, the sampling distribution of sample means approximates a normal distribution. The greater the sample size, the better the approximation." (Elementary Statistics - Picturing the World, Larson, Farber, 2003)
>
> "The sample size is large (generally n>=30)… (Introduction to Statistics and Data Analysis - Second Edition, Peck, Olson, Devore, 2005)
>
> "… the normal is often used as an approximation to the *t* distribution in a test of a null hypothesis about the mean of a normally distributed population when the population variance is estimated from a relatively large sample. A sample size exceeding 30 is often given as a minimal size in this connection." (Statistical Analysis for Business Decisions, Peters, Summers, 1968)

3. Document the maintenance program activities and results for each Segment, including maintenance dates and Countable Events for each included Component.

   This criterion needs little justification. To analyze system performance, the activities and results must be documented.

4. Analyze the maintenance program activities and results for each Segment to determine the overall performance of the Segment and develop maintenance intervals.

   This criterion states the obvious for a program that is based on the performance results of the Segment.

5. Determine the maximum allowable maintenance interval for each Segment such that the Segment experiences **Countable Events** on no more than 4% of the Components within the Segment, for the greater of either the last 30 Components maintained or all Components maintained in the previous year.

The performance-based maintenance (PBM) program ensures no more than a 4% failure rate for each segment of a Component Type. The 4% number was developed using the following:

- General experience of the drafting team based on open discussions of past performance.
- Test results provided by Consumers Energy for the years 1998-2008 showing a yearly average of 7.5% out-of-tolerance relay test results and a yearly average of 1.5% defective rate.
- Two failure analysis reports from Tennessee Valley Authority (TVA) where TVA identified problematic equipment based on a noticeably higher failure of a certain relay type (failure rate of 2.5%) and voltage transformer type (failure rate of 3.6%).

In addition to the number "30" discussion from number 2 above, the Error of Distribution formula discussed in number 1 above allows the number of components that should be included in a sample size for evaluation of the appropriate testing interval to be smaller because a lower confidence level is acceptable since the sample testing is repeated or updated annually. For this reason, the following assumptions are made:
B = 5%
z = 1.44 (85% confidence level)
π = 4%
Using the equation above, n=31.8. The Standard Drafting Team chose to use the round number of 30.

To maintain the technical justification for the ongoing use of a performance-based PSMP, the following additional criteria are provided:

1. At least annually, update the list of Protection System Components and Segments and/or description if any changes occur within the Segment.

   "Annually" was chosen as a reasonable time frame to update Component Segments due to Component installation, replacement, and retirement.

2. Perform maintenance on the greater of 5% of the Components (addressed in the performance based PSMP) in each Segment or 3 individual Components within the Segment in each year.

   Note: this 5% threshold sets a practical limitation on total length of time between intervals at 20 years regardless of performance.

   This criterion ensures that a utility keeps a flow of recent data to use in its annual analysis. The Standard Drafting Team felt that 20 years was the maximum time that should be allowed before a Component should be checked or maintained. The minimum number of three allows for the same 20 years interval based on the minimum Segment population of 60 (60/3=20).

3. For the prior year, analyze the maintenance program activities and results for each Segment to determine the overall performance of the Segment.

   Note: "Annually" was chosen as a reasonable time frame to allow for collection of new data to update the program's performance analysis.
4. Using the prior year's data, determine the maximum allowable maintenance interval for each Segment such that the Segment experiences Countable Events on no more than 4% of the Components within the Segment, for the greater of either the last 30 Components maintained or all Components maintained in the previous year.

   Note: Refer to number 5 above.

5. If the Components in a Protection System Segment maintained through a performance-based PSMP experience 4% or more Countable Events, develop, document, and implement an action plan to reduce the Countable Events to less than 4% of the Segment population within 3 years.

   Note: The 4% number is discussed in number 5 above. Three years was chosen by the drafting team because it allows time to modify the program and for the effects of a modified program to be observed.

Requirement R3:

R3. Each Transmission Owner, Generator Owner, and Distribution Provider that utilizes time-based maintenance programs shall maintain its Protection System Components that are included within the time-based maintenance program in accordance with the minimum maintenance activities and maximum maintenance intervals prescribed within Tables 1-1 through 1-5, Table 2, and Table 3. *[Violation Risk Factor: High] [Time Horizon: Operations Planning]*

Background and Rationale

NERC Reliability Principle 1 establishes that "Interconnected bulk power systems shall be planned and operated in a coordinated manner to perform reliably under normal and abnormal conditions as defined in the NERC Standards."

NERC Reliability Principle 7 establishes that "The reliability of the interconnected bulk power systems shall be assessed, monitored, and maintained on a wide-area basis."

The proper performance of Protection Systems is fundamental to the reliability of the Bulk Electric System (BES) as embodied in Reliability Principles 1 and 7, and proper performance of Protection Systems cannot be assured without periodic maintenance of those systems.

Therefore, Requirement R3 requires the implementation of the minimum maintenance activities and maximum allowable maintenance intervals as elucidated in Requirement R1 and the tables within the standard.

Requirement R4:

R4. Each Transmission Owner, Generator Owner, and Distribution Provider that utilizes performance-based maintenance program(s) in accordance with Requirement R2 shall implement and follow its PSMP for its Protection System Components that are included within the performance-based program(s). *[Violation Risk Factor: High] [Time Horizon: Operations Planning]*

Background and Rationale

NERC Reliability Principle 1 establishes that "Interconnected bulk power systems shall be planned and operated in a coordinated manner to perform reliably under normal and abnormal conditions as defined in the NERC Standards."

NERC Reliability Principle 7 establishes that "The reliability of the interconnected bulk power systems shall be assessed, monitored, and maintained on a wide-area basis."

The proper performance of Protection Systems is fundamental to the reliability of the Bulk Electric System (BES) as embodied in Reliability Principles 1 and 7, and proper performance of Protection Systems cannot be assured without periodic maintenance of those systems.

Therefore, Requirement R4 requires the implementation of an entity's Protection System Maintenance Program established pursuant to Requirement R2.

Requirement R5:

R5. Each Transmission Owner, Generator Owner, and Distribution Provider shall demonstrate efforts to correct identified Unresolved Maintenance Issues. *[Violation Risk Factor: Medium] [Time Horizon: Operations Planning]*

Unresolved Maintenance Issue *- A deficiency identified during a maintenance activity that causes the component to not meet the intended performance, cannot be corrected during the maintenance interval, and requires follow-up corrective action.*

Background and Rationale

The reliability objective of this requirement is to assure that Protection System components are returned to working order following the discovery of failures or malfunctions during scheduled maintenance. The maintenance activities specified in the Tables 1-1 through 1-5, Table 2, and Table 3 do not present any requirements related to restoration; therefore Requirement R5 of the Standard was developed to require the entity to "demonstrate efforts to correct identified Unresolved Maintenance Issues".

The drafting team does not believe entities should be found in violation of a maintenance program requirement because of the inability to complete a remediation program within the original maintenance interval. The drafting team does believe corrective actions should be timely but concludes it would be impossible to postulate all possible remediation projects and therefore, impossible to specify bounding time frames for resolution of all possible Unresolved Maintenance Issues or what documentation might be sufficient to provide proof that effective corrective action has been initiated. Therefore Requirement R5 requires only the entity demonstrate efforts to correct the Unresolved Maintenance Issues.

Management of completion of the identified Unresolved Maintenance Issue is a complex topic that falls outside of the scope of this standard. There can be any number of supply, process and management problems that make setting repair deadlines impossible. The drafting team specifically chose to require the entity to "demonstrate efforts to correct …" because of the concern that many more complex Unresolved Maintenance Issues might require greater than the remaining maintenance interval to resolve. For example, a problem might be identified on a VRLA battery during a 6 month check. In instances such as one that requiring battery replacement as part of the long term resolution, it is highly unlikely that the battery could be replaced in time to meet the 6 calendar month requirement for this maintenance activity.

During the period of time that the Protection System is operating in a degraded mode, NERC Standard PRC-001-1 requires that operating entities be informed of any Protection System failures that reduce reliability, and several NERC IRO-series and TOP-series standards require that operating entities operate the system in a manner that assures reliability while recognizing any system degradation.

Exhibit E

PRC-005-2: Supplementary Reference and FAQ

NERC
NORTH AMERICAN ELECTRIC
RELIABILITY CORPORATION

Supplementary Reference and FAQ

PRC-005-2 Protection System Maintenance

October 2012

RELIABILITY | ACCOUNTABILITY

3353 Peachtree Road NE
Suite 600, North Tower
Atlanta, GA 30326
404-446-2560 | www.nerc.com

Table of Contents

Table of Contents ii

1. Introduction and Summary 1

2. Need for Verifying Protection System Performance 2

2.1 Existing NERC Standards for Protection System Maintenance and Testing 2

2.2 Protection System Definition 3

2.3 Applicability of New Protection System Maintenance Standards 3

2.3.1 Frequently Asked Questions: 4

2.4.1 Frequently Asked Questions: 6

3. Protection Systems Product Generations 8

4. Definitions 10

4.1 Frequently Asked Questions: 11

5. Time-Based Maintenance (TBM) Programs 13

5.1 Maintenance Practices 13

5.1.1 Frequently Asked Questions: 15

5.2 Extending Time-Based Maintenance 16

5.2.1 Frequently Asked Questions: 16

6. Condition-Based Maintenance (CBM) Programs 18

6.1 Frequently Asked Questions: 18

7. Time-Based Versus Condition-Based Maintenance 20

7.1 Frequently Asked Questions: 20

8. Maximum Allowable Verification Intervals 26

8.1 Maintenance Tests 26

8.1.1 Table of Maximum Allowable Verification Intervals 26

8.1.2 Additional Notes for Tables 1-1 through 1-5 and Table 3 28

8.1.3 Frequently Asked Questions: 29

8.2 Retention of Records 34

8.2.1 Frequently Asked Questions: 34

8.3 Basis for Table 1 Intervals 36

8.4 Basis for Extended Maintenance Intervals for Microprocessor Relays 37

9. Performance-Based Maintenance Process 40

9.1 Minimum Sample Size 41

9.2 Frequently Asked Questions: 43

10. Overlapping the Verification of Sections of the Protection System 54

10.1 Frequently Asked Questions: 54

11. Monitoring by Analysis of Fault Records 55

11.1 Frequently Asked Questions: 56

12. Importance of Relay Settings in Maintenance Programs 57

12.1 Frequently Asked Questions: 57

13. Self-Monitoring Capabilities and Limitations 60

13.1 Frequently Asked Questions: 61

14. Notification of Protection System Failures 62

15. Maintenance Activities 63

15.1 Protective Relays (Table 1-1) 63

15.1.1 Frequently Asked Questions: 63

15.2 Voltage & Current Sensing Devices (Table 1-3) 63

15.2.1 Frequently Asked Questions: 65

15.3 Control circuitry associated with protective functions (Table 1-5) 66

15.3.1 Frequently Asked Questions: 68

15.4 Batteries and DC Supplies (Table 1-4) 70
15.4.1 Frequently Asked Questions: 70
15.5 Associated communications equipment (Table 1-2) 85
15.5.1 Frequently Asked Questions: 86
15.6 Alarms (Table 2) 89
15.6.1 Frequently Asked Questions: 89
15.7 Distributed UFLS and Distributed UVLS Systems (Table 3) 90
15.7.1 Frequently Asked Questions: 90
15.8 Examples of Evidence of Compliance 91
15.8.1 Frequently Asked Questions: 91
References 93
Figures 95
Figure 1: Typical Transmission System 95
Figure 2: Typical Generation System 96
Figure 1 & 2 Legend – components of Protection Systems 97
Appendix A 98
Appendix B 101
Protection System Maintenance Standard Drafting Team 101

1. Introduction and Summary

Note: This supplementary reference for PRC-005-2 is neither mandatory nor enforceable.

NERC currently has four Reliability Standards that are mandatory and enforceable in the United States and Canada and address various aspects of maintenance and testing of Protection and Control Systems.

These standards are:

PRC-005-1 — Transmission and Generation Protection System Maintenance and Testing

PRC-008-0 — Underfrequency Load Shedding Equipment Maintenance Programs

PRC-011-0 — UVLS System Maintenance and Testing

PRC-017-0 — Special Protection System Maintenance and Testing

While these standards require that applicable entities have a maintenance program for Protection Systems, and that these entities must be able to demonstrate they are carrying out such a program, there are no specifics regarding the technical requirements for Protection System maintenance programs. Furthermore, FERC Order 693 directed additional modifications respective to Protection System maintenance programs. PRC-005-2 combines and replaces PRC-005, PRC-008, PRC-011 and PRC-017.

2. Need for Verifying Protection System Performance

Protective relays have been described as silent sentinels, and do not generally demonstrate their performance until a Fault or other power system problem requires that they operate to protect power system Elements, or even the entire Bulk Electric System (BES). Lacking Faults, switching operations or system problems, the Protection Systems may not operate, beyond static operation, for extended periods. A Misoperation - a false operation of a Protection System or a failure of the Protection System to operate, as designed, when needed - can result in equipment damage, personnel hazards, and wide-area Disturbances or unnecessary customer outages. Maintenance or testing programs are used to determine the performance and availability of Protection Systems.

Typically, utilities have tested Protection Systems at fixed time intervals, unless they had some incidental evidence that a particular Protection System was not behaving as expected. Testing practices vary widely across the industry. Testing has included system functionality, calibration of measuring devices, and correctness of settings. Typically, a Protection System must be visited at its installation site and, in many cases, removed from service for this testing.

Fundamentally, a Reliability Standard for Protection System Maintenance and Testing requires the performance of the maintenance activities that are necessary to detect and correct plausible age and service related degradation of the Protection System components, such that a properly built and commissioned Protection System will continue to function as designed over its service life.

Similarly station batteries, which are an important part of the station dc supply, are not called upon to provide instantaneous dc power to the Protection System until power is required by the Protection System to operate circuit breakers or interrupting devices to clear Faults or to isolate equipment.

2.1 Existing NERC Standards for Protection System Maintenance and Testing

For critical BES protection functions, NERC standards have required that each utility or asset owner define a testing program. The starting point is the existing Standard PRC-005, briefly restated as follows:

Purpose: To document and implement programs for the maintenance of all Protection Systems affecting the reliability of the Bulk Electric System (BES) so that these Protection Systems are kept in working order.

PRC-005-1 is not specific on where the boundaries of the Protection Systems lie. However, the definition of Protection System in the NERC Glossary of Terms used in Reliability Standards indicates what must be included as a minimum.

At the beginning of the project to develop PRC-005-2, the definition of Protection System was:

Protective relays, associated communications Systems, voltage and current sensing devices, station batteries and dc control circuitry.

Applicability: Owners of generation and transmission Protection Systems.

Requirements: The owner shall have a documented maintenance program with test intervals. The owner must keep records showing that the maintenance was performed at the specified intervals.

2.2 Protection System Definition

The most recently approved definition of Protection Systems is:

- Protective relays which respond to electrical quantities,
- Communications systems necessary for correct operation of protective functions,
- Voltage and current sensing devices providing inputs to protective relays,
- Station dc supply associated with protective functions (including station batteries, battery chargers, and non-battery-based dc supply), and
- Control circuitry associated with protective functions through the trip coil(s) of the circuit breakers or other interrupting devices.

2.3 Applicability of New Protection System Maintenance Standards

The BES purpose is to transfer bulk power. The applicability language has been changed from the original PRC-005:

"*...affecting the reliability of the Bulk Electric System (BES)…*"

To the present language:

"*…that are installed for the purpose of detecting Faults on BES Elements (lines, buses, transformers, etc.).*"

The drafting team intends that this standard will follow with any definition of the Bulk Electric System. There should be no ambiguity; if the Element is a BES Element, then the Protection System protecting that Element should then be included within this standard. If there is regional variation to the definition, then there will be a corresponding regional variation to the Protection Systems that fall under this standard.

There is no way for the Standard Drafting Team to know whether a specific 230KV line, 115KV line (even 69KV line), for example, should be included or excluded. Therefore, the team set the clear intent that the standard language should simply be applicable to Protection Systems for BES Elements.

The BES is a NERC defined term that, from time to time, may undergo revisions. Additionally, there may even be regional variations that are allowed in the present and future definitions. See the NERC Glossary of Terms for the present, in-force definition. See the applicable Regional Reliability Organization for any applicable allowed variations.

While this standard will undergo revisions in the future, this standard will not attempt to keep up with revisions to the NERC definition of BES, but, rather, simply make BES Protection Systems applicable.

The Standard is applied to Generator Owners (GO) and Transmission Owners (TO) because GOs and TOs have equipment that is BES equipment. The standard brings in Distribution Providers (DP) because, depending on the station configuration of a particular substation, there may be Protection System equipment installed at a non-transmission voltage level (Distribution

Provider equipment) that is wholly or partially installed to protect the BES. PRC-005-2 would apply to this equipment. An example is underfrequency load-shedding, which is frequently applied well down into the distribution system to meet PRC-007-0.

As this standard is intended to replace the existing PRC-005, PRC-008, PRC-011 and PRC-017, those standards are used in the construction of this revision of PRC-005-1. Much of the original intent of those standards was carried forward whenever it was possible to continue the intent without a disagreement with FERC Order 693. For example, the original PRC-008 was constructed quite differently than the original PRC-005. The drafting team agrees with the intent of this and notes that distributed tripping schemes would have to exhibit multiple failures to trip before they would prove to be significant, as opposed to a single failure to trip of, for example, a transmission Protection System Bus Differential lock-out relay. While many failures of these distribution breakers could add up to be significant, it is also believed that distribution breakers are operated often on just Fault clearing duty; and, therefore, the distribution circuit breakers are operated at least as frequently as stipulated in any requirement in this standard.

Additionally, since this standard will now replace PRC-011, it will be important to make the distinction between under-voltage Protection Systems that protect individual Loads and Protection Systems that are UVLS schemes that protect the BES. Any UVLS scheme that had been applicable under PRC-011 will now be applicable under this revision of PRC-005-1. An example of an under-voltage load-shedding scheme that is not applicable to this standard is one in which the tripping action was intended to prevent low distribution voltage to a specific Load from a Transmission system that was intact except for the line that was out of service, as opposed to preventing a Cascading outage or Transmission system collapse.

It had been correctly noted that the devices needed for PRC-011 are the very same types of devices needed in PRC-005.

Thus, a standard written for Protection Systems of the BES can easily make the needed requirements for Protection Systems, and replace some other standards at the same time.

2.3.1 Frequently Asked Questions:

What exactly is the BES, or Bulk Electric System?

BES is the abbreviation for Bulk Electric System. BES is a term in the Glossary of Terms used in Reliability Standards, and is not being modified within this draft standard.
NERC's approved definition of Bulk Electric System is:

As defined by the Regional Reliability Organization, the electrical generation resources, transmission lines, Interconnections with neighboring Systems, and associated equipment, generally operated at voltages of 100 kV or higher. Radial transmission Facilities serving only Load with one transmission source are generally not included in this definition.

The BES definition is presently undergoing the process of revision.

Each regional entity implements a definition of the Bulk Electric System that is based on this NERC definition; in some cases, supplemented by additional criteria. These regional definitions have been documented and provided to FERC as part of a *June 14, 2007 Informational Filing*.

Why is Distribution Provider included within the Applicable Entities and as a responsible entity within several of the requirements? Wouldn't anyone having relevant Facilities be a Transmission Owner?

Depending on the station configuration of a particular substation, there may be Protection System equipment installed at a non-transmission voltage level (Distribution Provider equipment) that is wholly or partially installed to protect the BES. PRC-005-2 would apply to this equipment. An example is underfrequency load-shedding, which is frequently applied well down into the distribution system to meet PRC-007-0.

We have an under voltage load-shedding (UVLS) system in place that prevents one of our distribution substations from supplying extremely low voltage in the case of a specific transmission line outage. The transmission line is part of the BES. Does this mean that our UVLS system falls within this standard?

The situation, as stated, indicates that the tripping action was intended to prevent low distribution voltage to a specific Load from a Transmission System that was intact, except for the line that was out of service, as opposed to preventing Cascading outage or Transmission System Collapse.

This standard is not applicable to this UVLS.

We have a UFLS or UVLS scheme that sheds the necessary Load through distribution-side circuit breakers and circuit reclosers. Do the trip-test requirements for circuit breakers apply to our situation?

No. Distributed tripping schemes would have to exhibit multiple failures to trip before they would prove to be significant, as opposed to a single failure to trip of, for example, a transmission Protection System bus differential lock-out relay. While many failures of these distribution breakers could add up to be significant, it is also believed that distribution breakers are operated often on just Fault clearing duty; and, therefore, the distribution circuit breakers are operated at least as frequently as any requirements that might have appeared in this standard.

We have a UFLS scheme that, in some locales, sheds the necessary Load through non-BES circuit breakers and, occasionally, even circuit switchers. Do the trip-test requirements for circuit breakers apply to our situation?

If your "non-BES circuit breaker" has been brought into this standard by the inclusion of UFLS requirements, and otherwise would not have been brought into this standard, then the answer is that there are no trip-test requirements. For these devices that are otherwise non-BES assets, these tripping schemes would have to exhibit multiple failures to trip before they would prove to be as significant as, for example, a single failure to trip of a transmission Protection System bus differential lock-out relay.

How does the "Facilities" section of "Applicability" track with the standards that will be retired once PRC-005-2 becomes effective?

In establishing PRC-005-2, the drafting team has combined legacy standards PRC-005-1, PRC-008-0, PRC-011-0, and PRC-017-0. The merger of the subject matter of these standards is reflected in Applicability 4.2.

The intent of the drafting team is that the legacy standards be reflected in PRC-005-2 as follows:

- Applicability of PRC-005-1 for Protection Systems relating to non-generator elements of the BES is addressed in 4.2.1;
- Applicability of PRC-008-0 for underfrequency load shedding systems is addressed in 4.2.2;
- Applicability of PRC-011-0 for undervoltage load shedding relays is addressed in 4.2.3;
- Applicability of PRC-017-0 for Special Protection Systems is addressed in 4.2.4;
- Applicability of PRC-005-1 for Protection Systems for BES generators is addressed in 4.2.5.

2.4 Applicable Relays

The NERC Glossary definition has a Protection System including relays, dc supply, current and voltage sensing devices, dc control circuitry and associated communications circuits. The relays to which this standard applies are those protective relays that respond to electrical quantities and provide a trip output to trip coils, dc control circuitry or associated communications equipment. This definition extends to IEEE Device No. 86 (lockout relay) and IEEE Device No. 94 (tripping or trip-free relay), as these devices are tripping relays that respond to the trip signal of the protective relay that processed the signals from the current and voltage-sensing devices.

Relays that respond to non-electrical inputs or impulses (such as, but not limited to, vibration, pressure, seismic, thermal or gas accumulation) are not included.

2.4.1 Frequently Asked Questions:

Are power circuit reclosers, reclosing relays, closing circuits and auto-restoration schemes covered in this Standard?

No. This standard covers protective relays that use electrical quantity measurements to determine anomalies and to trip a portion of the BES. Reclosers, reclosing relays, closing circuits and auto-restoration schemes are used to cause devices to close, as opposed to electrical-measurement relays and their associated circuits that cause circuit interruption from the BES; such closing devices and schemes are more appropriately covered under other NERC standards. There is one notable exception: Since PRC-017 will be superseded by PRC-005-2, then if a Special Protection System (previously covered by PRC-017) incorporates automatic closing of breakers, then the SPS-related closing devices must be tested accordingly.

I use my protective relays only as sources of metered quantities and breaker status for SCADA and EMS through a substation distributed RTU or data concentrator to the control center. What are the maintenance requirements for the relays?

This standard addresses Protection Systems that are installed for the purpose of detecting Faults on BES Elements (lines, buses, transformers, etc.). Protective relays, providing only the functions mentioned in the question, are not included.

Are Reverse Power Relays installed on the low-voltage side of distribution banks considered to be components of "Protection Systems that are installed for the purpose of detecting Faults on BES Elements (lines, buses, transformers, etc.)"?

Reverse power relays are often installed to detect situations where the transmission source becomes deenergized and the distribution bank remains energized from a source on the low-voltage side of the transformer and the settings are calculated based on the charging current of the transformer from the low-voltage side. Although these relays may operate as a result of a fault on a BES element, they are not 'installed for the purpose of detecting' these faults.

Is a Sudden Pressure Relay an auxiliary tripping relay?

No. IEEE C37.2-2008 assigns the Device No.# 94 to auxiliary tripping relays. Sudden pressure relays are assigned Device No.# 63. Sudden pressure relays are presently excluded from the standard because it does not utilize voltage and/or current measurements to determine anomalies. Devices that use anything other than electrical detection means are excluded. The trip path from a sudden pressure device is a part of the Protection System control circuitry. The sensing element is omitted from PRC-005-2 testing requirements because the SDT is unaware of industry-recognized testing protocol for the sensing elements. The SDT believes that Protection Systems that trip (or can trip) the BES should be included. This position is consistent with the currently-approved PRC-005-1a, consistent with the SAR for Project 2007-17, and understands this to be consistent with the position of FERC staff.

My mechanical device does not operate electrically and does not have calibration settings; what maintenance activities apply?

You must conduct a test(s) to verify the integrity of any trip circuit that is a part of a Protection System. This standard does not cover circuit breaker maintenance or transformer maintenance. The standard also does not presently cover testing of devices, such as sudden pressure relays (63), temperature relays (49), and other relays which respond to mechanical parameters, rather than electrical parameters. There is an expectation that Fault pressure relays and other non-electrically initiated devices may become part of some maintenance standard. This standard presently covers trip paths. It might seem incongruous to test a trip path without a present requirement to test the device; and, thus, be arguably more work for nothing. But one simple test to verify the integrity of such a trip path could be (but is not limited to) a voltage presence test, as a dc voltage monitor might do if it were installed monitoring that same circuit.

The standard specifically mentions auxiliary and lock-out relays. What is an auxiliary tripping relay?

An auxiliary relay, IEEE Device No.# 94, is described in IEEE Standard C37.2-2008 as: "A device that functions to trip a circuit breaker, contactor, or equipment; to permit immediate tripping by other devices; or to prevent immediate reclosing of a circuit interrupter if it should open automatically, even though its closing circuit is maintained closed."

What is a lock-out relay?

A lock-out relay, IEEE Device No.# 86, is described in IEEE Standard C37.2 as: "A device that trips and maintains the associated equipment or devices inoperative until it is reset by an operator, either locally or remotely."

3. Protection Systems Product Generations

The likelihood of failure and the ability to observe the operational state of a critical Protection System both depends on the technological generation of the relays, as well as how long they have been in service. Unlike many other transmission asset groups, protection and control systems have seen dramatic technological changes spanning several generations. During the past 20 years, major functional advances are primarily due to the introduction of microprocessor technology for power system devices, such as primary measuring relays, monitoring devices, control Systems, and telecommunications equipment.

Modern microprocessor-based relays have six significant traits that impact a maintenance strategy:

- Self monitoring capability - the processors can check themselves, peripheral circuits, and some connected substation inputs and outputs, such as trip coil continuity. Most relay users are aware that these relays have self monitoring, but are not focusing on exactly what internal functions are actually being monitored. As explained further below, every element critical to the Protection System must be monitored, or else verified periodically.
- Ability to capture Fault records showing how the Protection System responded to a Fault in its zone of protection, or to a nearby Fault for which it is required not to operate.
- Ability to meter currents and voltages, as well as status of connected circuit breakers, continuously during non-Fault times. The relays can compute values, such as MW and MVAR line flows, that are sometimes used for operational purposes, such as SCADA.
- Data communications via ports that provide remote access to all of the results of Protection System monitoring, recording and measurement.
- Ability to trip or close circuit breakers and switches through the Protection System outputs, on command from remote data communications messages, or from relay front panel button requests.
- Construction from electronic components, some of which have shorter technical life or service life than electromechanical components of prior Protection System generations.

There have been significant advances in the technology behind the other components of Protection Systems. Microprocessors are now a part of battery chargers, associated communications equipment, voltage and current-measuring devices, and even the control circuitry (in the form of software-latches replacing lock-out relays, etc.).

Any Protection System component can have self-monitoring and alarming capability, not just relays. Because of this technology, extended time intervals can find their way into all components of the Protection System.

This standard also recognizes the distinct advantage of using advanced technology to justifiably defer or even eliminate traditional maintenance. Just as a hand-held calculator does not require routine testing and calibration, neither does a calculation buried in a microprocessor-based device that results in a “lock-out.” Thus, the software-latch 86 that replaces an electro-

mechanical 86 does not require routine trip testing. Any trip circuitry associated with the "soft 86" would still need applicable verification activities performed, but the actual "86" does not have to be "electrically operated" or even toggled.

4. Definitions

Protection System Maintenance Program (PSMP) — An ongoing program by which Protection System components are kept in working order and proper operation of malfunctioning components is restored. A maintenance program for a specific component includes one or more of the following activities:

- Verify — Determine that the component is functioning correctly.
- Monitor — Observe the routine in-service operation of the component.
- Test — Apply signals to a component to observe functional performance or output behavior, or to diagnose problems.
- Inspect — Detect visible signs of component failure, reduced performance and degradation.
- Calibrate — Adjust the operating threshold or measurement accuracy of a measuring element to meet the intended performance requirement.
- Unresolved Maintenance Issue – A deficiency identified during a maintenance activity that causes the component to not meet the intended performance, cannot be corrected during the maintenance interval,and requires follow-up corrective action.
- Segment – Protection Systems or components of a consistent design standard, or a particular model or type from a single manufacturer that typically share other common elements. Consistent performance is expected across the entire population of a Segment. A Segment must contain at least sixty (60) individual components.
- Component Type - Any one of the five specific elements of the Protection System definition.
- Component – A Component is any individual discrete piece of equipment included in a Protection System, including but not limited to a protective relay or current sensing device. The designation of what constitutes a control circuit Component is dependent upon how an entity performs and tracks the testing of the control circuitry. Some entities test their control circuits on a breaker basis whereas others test their circuitry on a local zone of protection basis. Thus, entities are allowed the latitude to designate their own definitions of control circuit Components. Another example of where the entity has some discretion on determining what constitutes a single Component is the voltage and current sensing devices, where the entity may choose either to designate a full three-phase set of such devices or a single device as a single Component.*
- Countable Event – A failure of a Component requiring repair or replacement, any condition discovered during the maintenance activities in Tables 1-1 through 1-5 and Table 3 which requires corrective action or a Misoperation attributed to hardware failure or calibration failure. Misoperations due to productdesign errors, software errors, relay settings different from specified settings, Protection SystemComponent configuration errors, or Protection System application errors are not included in Countable Events.

4.1 Frequently Asked Questions:

Why does PRC-005-2 not specifically require maintenance and testing procedures, as reflected in the previous standard, PRC-005-1?

PRC-005-1 does not require detailed maintenance and testing procedures, but instead requires summaries of such procedures, and is not clear on what is actually required. PRC-005-2 requires a documented maintenance program, and is focused on establishing requirements rather than prescribing methodology to meet those requirements. Between the activities identified in the Tables 1-1 through 1-5, Table 2 and Table 3 (collectively the "Tables"), and the various components of the definition established for a "Protection System Maintenance Program," PRC-005-2 establishes the activities and time basis for a Protection System Maintenance Program to a level of detail not previously required.

Please clarify what is meant by "restore" in the definition of maintenance.

The description of "restore" in the definition of a Protection System Maintenance Program addresses corrective activities necessary to assure that the component is returned to working order following the discovery of its failure or malfunction. The Maintenance Activities specified in the Tables do not present any requirements related to Restoration; R5 of the standard does require that the entity "shall demonstrate efforts to correct any identified Unresolved Maintenance Issues." Some examples of restoration (or correction of Unresolved Maintenance Issues) include, but are not limited to, replacement of capacitors in distance relays to bring them to working order; replacement of relays, or other Protection System components, to bring the Protection System to working order; upgrade of electromechanical or solid-state protective relays to microprocessor-based relays following the discovery of failed components. Restoration, as used in this context, is not to be confused with restoration rules as used in system operations. Maintenance activity necessarily includes both the detection of problems and the repairs needed to eliminate those problems. This standard does not identify all of the Protection System problems that must be detected and eliminated, rather it is the intent of this standard that an entity determines the necessary working order for their various devices, and keeps them in working order. If an equipment item is repaired or replaced, then the entity can restart the maintenance-time-interval-clock, if desired; however, the replacement of equipment does not remove any documentation requirements that would have been required to verify compliance with time-interval requirements. In other words, do not discard maintenance data that goes to verify your work.

The retention of documentation for new and/or replaced equipment is all about proving that the maintenance intervals had been in compliance. For example, a long-range plan of upgrades might lead an entity to ignore required maintenance; retaining the evidence of prior maintenance that existed before any retirements and upgrades proves compliance with the standard.

Please clarify what is meant by "...demonstrate efforts to correct an Unresolved Maintenance Issue..."; why not measure the completion of the corrective action?

Management of completion of the identified Unresolved Maintenance Issue is a complex topic that falls outside of the scope of this standard. There can be any number of supply, process and management problems that make setting repair deadlines impossible. The SDT specifically chose the phrase "demonstrate efforts to correct" (with guidance from NERC Staff) because of the concern that many more complex Unresolved Maintenance Issues might require greater

than the remaining maintenance interval to resolve (and yet still be a "closed-end process"). For example, a problem might be identified on a VRLA battery during a six-month check. In instances such as one that requiring battery replacement as part of the long-term resolution, it is highly unlikely that the battery could be replaced in time to meet the six-calendar-month requirement for this maintenance activity. The SDT does not believe entities should be found in violation of a maintenance program requirement because of the inability to complete a remediation program within the original maintenance interval. The SDT does believe corrective actions should be timely, but concludes it would be impossible to postulate all possible remediation projects; and, therefore, impossible to specify bounding time frames for resolution of all possible Unresolved Maintenance Issues, or what documentation might be sufficient to provide proof that effective corrective action is being undertaken.

5. Time-Based Maintenance (TBM) Programs

Time-based maintenance is the process in which Protection Systems are maintained or verified according to a time schedule. The scheduled program often calls for technicians to travel to the physical site and perform a functional test on Protection System components. However, some components of a TBM program may be conducted from a remote location - for example, tripping a circuit breaker by communicating a trip command to a microprocessor relay to determine if the entire Protection System tripping chain is able to operate the breaker. Similarly, all Protection System components can have the ability to remotely conduct tests, either on-command or routinely; the running of these tests can extend the time interval between hands-on maintenance activities.

5.1 Maintenance Practices

Maintenance and testing programs often incorporate the following types of maintenance practices:

- TBM – time-based maintenance – externally prescribed maximum maintenance or testing intervals are applied for components or groups of components. The intervals may have been developed from prior experience or manufacturers' recommendations. The TBM verification interval is based on a variety of factors, including experience of the particular asset owner, collective experiences of several asset owners who are members of a country or regional council, etc. The maintenance intervals are fixed and may range in number of months or in years.

  TBM can include review of recent power system events near the particular terminal. Operating records may verify that some portion of the Protection System has operated correctly since the last test occurred. If specific protection scheme components have demonstrated correct performance within specifications, the maintenance test time clock can be reset for those components.

- PBM – Performance-Based Maintenance - intervals are established based on analytical or historical results of TBM failure rates on a statistically significant population of similar components. Some level of TBM is generally followed. Statistical analyses accompanied by adjustments to maintenance intervals are used to justify continued use of PBM-developed extended intervals when test failures or in-service failures occur infrequently.

- CBM – condition-based maintenance – continuously or frequently reported results from non-disruptive self-monitoring of components demonstrate operational status as those components remain in service. Whatever is verified by CBM does not require manual testing, but taking advantage of this requires precise technical focus on exactly what parts are included as part of the self-diagnostics. While the term "Condition-Based-Maintenance" (CBM) is no longer used within the standard itself, it is important to note that the concepts of CBM are a part of the standard (in the form of extended time intervals through status-monitoring). These extended time intervals are only allowed (in the absence of PBM) if the condition of the device is monitored (CBM). As a consequence of the "monitored-basis-time-intervals" existing within the standard, the explanatory discussions within this Supplementary Reference concerned with CBM will remain in this reference and are discussed as CBM.

Microprocessor-based Protection System components that perform continuous self-monitoring verify correct operation of most components within the device. Self-monitoring capabilities may include battery continuity, float voltages, unintentional grounds, the ac signal inputs to a relay, analog measuring circuits, processors and memory for measurement, protection, and data communications, trip circuit monitoring, and protection or data communications signals (and many, many more measurements). For those conditions, failure of a self-monitoring routine generates an alarm and may inhibit operation to avoid false trips. When internal components, such as critical output relay contacts, are not equipped with self-monitoring, they can be manually tested. The method of testing may be local or remote, or through inherent performance of the scheme during a system event.

The TBM is the overarching maintenance process of which the other types are subsets. Unlike TBM, PBM intervals are adjusted based on good or bad experiences. The CBM verification intervals can be hours, or even milliseconds between non-disruptive self-monitoring checks within or around components as they remain in service.

TBM, PBM, and CBM can be combined for individual components, or within a complete Protection System. The following diagram illustrates the relationship between various types of maintenance practices described in this section. In the Venn diagram, the overlapping regions show the relationship of TBM with PBM historical information and the inherent continuous monitoring offered through CBM.

This figure shows:

- Region 1: The TBM intervals that are increased based on known reported operational condition of individual components that are monitoring themselves.
- Region 2: The TBM intervals that are adjusted up or down based on results of analysis of maintenance history of statistically significant population of similar products that have been subject to TBM.
- Region 3: Optimal TBM intervals based on regions 1 and 2.

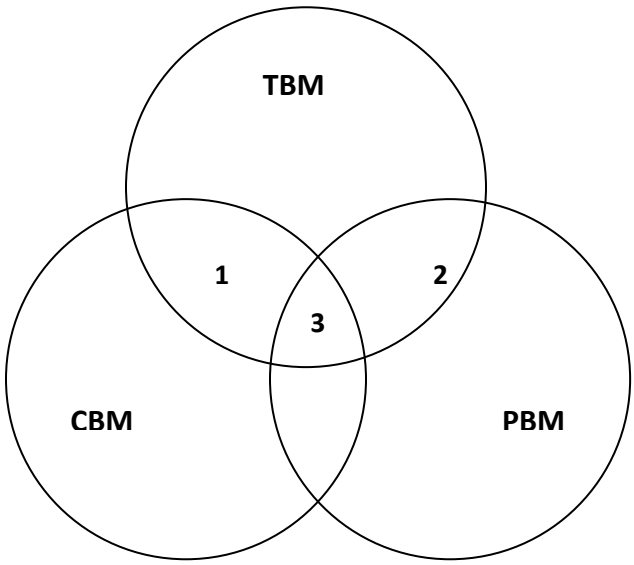

Relationship of time-based maintenance types

5.1.1 Frequently Asked Questions:

The standard seems very complicated, and is difficult to understand. Can it be simplified?

Because the standard is establishing parameters for condition-based Maintenance (R1) and Performance-Based Maintenance (R2), in addition to simple time-based Maintenance, it does appear to be complicated. At its simplest, an entity needs to ONLY perform time-based maintenance according to the unmonitored rows of the Tables. If an entity then wishes to take advantage of monitoring on its Protection System components and its available lengthened time intervals, then it may, as long as the component has the listed monitoring attributes. If an entity wishes to use historical performance of its Protection System components to perform Performance-Based Maintenance, then R2 applies.

Please see the following diagram, which provides a "flow chart" of the standard.

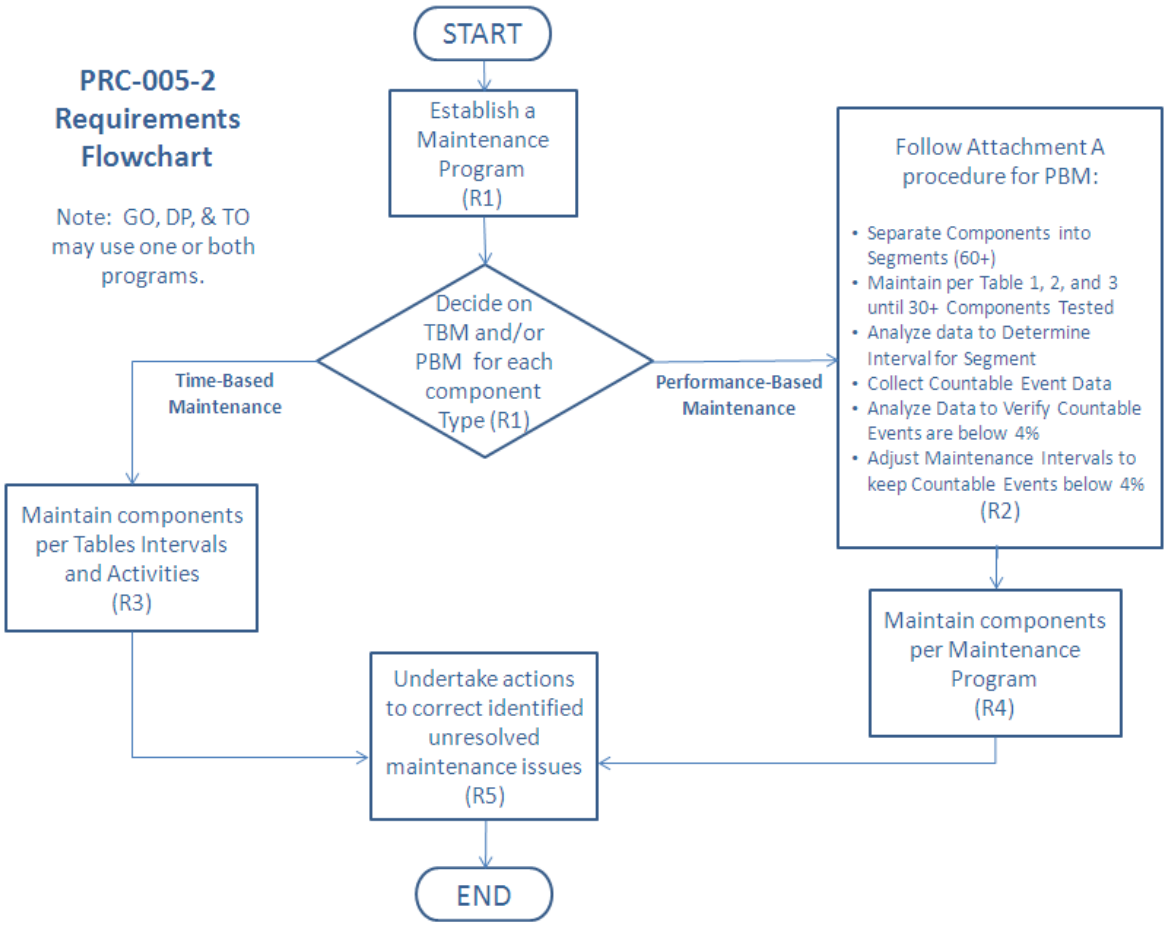

We have an electromechanical (unmonitored) relay that has a trip output to a lockout relay (unmonitored) which trips our transformer off-line by tripping the transformer's high-side and low-side circuit breakers. What testing must be done for this system?

This system is made up of components that are all unmonitored. Assuming a time-based Protection System maintenance program schedule (as opposed to a Performance-Based

maintenance program), each component must be maintained per the most frequent hands-on activities listed in the Tables.

5.2 Extending Time-Based Maintenance

All maintenance is fundamentally time-based. Default time-based intervals are commonly established to assure proper functioning of each component of the Protection System, when data on the reliability of the components is not available other than observations from time-based maintenance. The following factors may influence the established default intervals:

- If continuous indication of the functional condition of a component is available (from relays or chargers or any self-monitoring device), then the intervals may be extended, or manual testing may be eliminated. This is referred to as condition-based maintenance or CBM. CBM is valid only for precisely the components subject to monitoring. In the case of microprocessor-based relays, self-monitoring may not include automated diagnostics of every component within a microprocessor.
- Previous maintenance history for a group of components of a common type may indicate that the maintenance intervals can be extended, while still achieving the desired level of performance. This is referred to as Performance-Based Maintenance, or PBM. It is also sometimes referred to as reliability-centered maintenance, or RCM; but PBM is used in this document.
- Observed proper operation of a component may be regarded as a maintenance verification of the respective component or element in a microprocessor-based device. For such an observation, the maintenance interval may be reset only to the degree that can be verified by data available on the operation. For example, the trip of an electromechanical relay for a Fault verifies the trip contact and trip path, but only through the relays in series that actually operated; one operation of this relay cannot verify correct calibration.

Excessive maintenance can actually decrease the reliability of the component or system. It is not unusual to cause failure of a component by removing it from service and restoring it. The improper application of test signals may cause failure of a component. For example, in electromechanical overcurrent relays, test currents have been known to destroy convolution springs.

In addition, maintenance usually takes the component out of service, during which time it is not able to perform its function. Cutout switch failures, or failure to restore switch position, commonly lead to protection failures.

5.2.1 Frequently Asked Questions:

If I show the protective device out of service while it is being repaired, then can I add it back as a new protective device when it returns? If not, my relay testing history would show that I was out of compliance for the last maintenance cycle.

The maintenance and testing requirements (R5) (in essence) state "…shall demonstrate efforts to correct any identified Unresolved Maintenance Issues." The type of corrective activity is not stated; however it could include repairs or replacements.

Your documentation requirements will increase, of course, to demonstrate that your device tested bad and had corrective actions initiated. Your regional entity could very well ask for documentation showing status of your corrective actions.

6. Condition-Based Maintenance (CBM) Programs

Condition-based maintenance is the process of gathering and monitoring the information available from modern microprocessor-based relays and other intelligent electronic devices (IEDs) that monitor Protection System elements. These devices generate monitoring information during normal operation, and the information can be assessed at a convenient location remote from the substation. The information from these relays and IEDs is divided into two basic types:

1. Information can come from background self-monitoring processes, programmed by the manufacturer, or by the user in device logic settings. The results are presented by alarm contacts or points, front panel indications, and by data communications messages.
2. Information can come from event logs, captured files, and/or oscillographic records for Faults and Disturbances, metered values, and binary input status reports. Some of these are available on the device front panel display, but may be available via data communications ports. Large files of Fault information can only be retrieved via data communications. These results comprise a mass of data that must be further analyzed for evidence of the operational condition of the Protection System.

Using these two types of information, the user can develop an effective maintenance program carried out mostly from a central location remote from the substation. This approach offers the following advantages:

Non-invasive Maintenance: The system is kept in its normal operating state, without human intervention for checking. This reduces risk of damage, or risk of leaving the system in an inoperable state after a manual test. Experience has shown that keeping human hands away from equipment known to be working correctly enhances reliability.

Virtually Continuous Monitoring: CBM will report many hardware failure problems for repair within seconds or minutes of when they happen. This reduces the percentage of problems that are discovered through incorrect relaying performance. By contrast, a hardware failure discovered by TBM may have been there for much of the time interval between tests, and there is a good chance that some devices will show health problems by incorrect operation before being caught in the next test round. The frequent or continuous nature of CBM makes the effective verification interval far shorter than any required TBM maximum interval. To use the extended time intervals available through Condition Based Maintenance, simply look for the rows in the Tables that refer to monitored items.

6.1 Frequently Asked Questions:

My microprocessor relays and dc circuit alarms are contained on relay panels in a 24-hour attended control room. Does this qualify as an extended time interval condition-based (monitored) system?

Yes, provided the station attendant (plant operator, etc.) monitors the alarms and other indications (comparable to the monitoring attributes) and reports them within the given time limits that are stated in the criteria of the Tables.

When documenting the basis for inclusion of components into the appropriate levels of monitoring, as per Requirement R1 (Part 1.4) of the standard, is it necessary to provide this documentation about the device by listing of every component and the specific monitoring attributes of each device?

No. While maintaining this documentation on the device level would certainly be permissible, it is not necessary. Global statements can be made to document appropriate levels of monitoring for the entire population of a component type or portion thereof.

For example, it would be permissible to document the conclusion that all BES substation dc supply battery chargers are monitored by stating the following within the program description:

> "All substation dc supply battery chargers are considered monitored and subject to the rows for monitored equipment of Table 1-4 requirements, as all substation dc supply battery chargers are equipped with dc voltage alarms and ground detection alarms that are sent to the manned control center."

Similarly, it would be acceptable to use a combination of a global statement and a device-level list of exclusions. Example:

> "Except as noted below, all substation dc supply battery chargers are considered monitored and subject to the rows for monitored equipment of Table 1-4 requirements, as all substation dc supply battery chargers are equipped with dc voltage alarms and ground detection alarms that are sent to the manned control center. The dc supply battery chargers of Substation X, Substation Y, and Substation Z are considered unmonitored and subject to the rows for unmonitored equipment in Table 1-4 requirements, as they are not equipped with ground detection capability."

Regardless whether this documentation is provided by device listing of monitoring attributes, by global statements of the monitoring attributes of an entire population of component types, or by some combination of these methods, it should be noted that auditors may request supporting drawings or other documentation necessary to validate the inclusion of the device(s) within the appropriate level of monitoring. This supporting background information need not be maintained within the program document structure, but should be retrievable if requested by an auditor.

7. Time-Based Versus Condition-Based Maintenance

Time-based and condition-based (or monitored) maintenance programs are both acceptable, if implemented according to technically sound requirements. Practical programs can employ a *combination of time-based and condition-based maintenance.* The standard requirements introduce the concept of optionally using condition monitoring as a documented element of a maintenance program.

The Federal Energy Regulatory Commission (FERC), in its Order Number 693 Final Rule, dated March 16, 2007 (18 CFR Part 40, Docket No. RM06-16-000) on Mandatory Reliability Standards for the Bulk-Power System, directed NERC to submit a modification to PRC-005-1 that includes a requirement that maintenance and testing of a Protection System must be carried out within a maximum allowable interval that is appropriate to the type of the Protection System and its impact on the reliability of the Bulk Power System. Accordingly, this Supplementary Reference Paper refers to the specific maximum allowable intervals in PRC-005-2. The defined time limits allow for longer time intervals if the maintained component is monitored.

A key feature of condition-based monitoring is that it effectively reduces the time delay between the moment of a protection failure and time the Protection System owner knows about it, for the monitored segments of the Protection System. In some cases, the verification is practically continuous - the time interval between verifications is minutes or seconds. Thus, technically sound, condition-based verification, meets the verification requirements of the FERC order even more effectively than the strictly time-based tests of the same system components.

The result is that:

This NERC standard permits utilities to use a technically sound approach and to take advantage of remote monitoring, data analysis, and control capabilities of modern Protection Systems to reduce the need for periodic site visits and invasive testing of components by on-site technicians. This periodic testing must be conducted within the maximum time intervals specified in Tables 1-1 through 1-5 and Table 2 of PRC-005-2.

7.1 Frequently Asked Questions:

What is a Calendar Year?

Calendar Year - January 1 through December 31 of any year. As an example, if an event occurred on June 17, 2009 and is on a “One Calendar Year Interval,” the next event would have to occur on or before December 31, 2010.

Please provide an example of “4 Calendar Months”.

If a maintenance activity is described as being needed every four Calendar Months then it is performed in a (given) month and due again four months later. For example a battery bank is inspected in month number 1 then it is due again before the end of the month number5. And specifically consider that you perform your battery inspection on January 3, 2010 then it must be inspected again before the end of May. Another example could be that a four-month inspection was performed in January is due in May, but if performed in March (instead of May)

would still be due four months later therefore the activity is due again July. Basically every "four Calendar Months" means to add four months from the last time the activity was performed.

Please provide an example of the unmonitored versus other levels of monitoring available?

An unmonitored Protection System has no monitoring and alarm circuits on the Protection System components. A Protection System component that has monitoring attributes but no alarm output connected is considered to be unmonitored.

A monitored Protection System or an individual monitored component of a Protection System has monitoring and alarm circuits on the Protection System components. The alarm circuits must alert, within 24 hours, a location wherein corrective action can be initiated. This location might be, but is not limited to, an Operations Center, Dispatch Office, Maintenance Center or even a portable SCADA system.

There can be a combination of monitored and unmonitored Protection Systems within any given scheme, substation or plant; there can also be a combination of monitored and unmonitored components within any given Protection System.

Example #1: A combination of monitored and unmonitored components within a given Protection System might be:

- A microprocessor relay with an internal alarm connected to SCADA to alert 24-hr staffed operations center; it has internal self diagnosis and alarming. (monitored)
- Instrumentation transformers, with no monitoring, connected as inputs to that relay. (unmonitored)
- A vented Lead-Acid battery with a low voltage alarm for the station dc supply voltage and an unintentional grounds detection alarm connected to SCADA. (monitoring varies)
- A circuit breaker with a trip coil, and the trip circuit is not monitored. (unmonitored)

Given the particular components and conditions, and using Table 1 and Table 2, the particular components have maximum activity intervals of:

Every four calendar months, inspect:

- Electrolyte level (station dc supply voltage and unintentional ground detection is being maintained more frequently by the monitoring system).

Every 18 calendar months, verify/inspect the following:

- Battery bank ohmic values to station battery baseline (if performance tests are not opted)
- Battery charger float voltage
- Battery rack integrity
- Cell condition of all individual battery cells (where visible)
- Battery continuity
- Battery terminal connection resistance
- Battery cell-to-cell resistance (where available to measure)

Every six calendar years, perform/verify the following:

- Battery performance test (if internal ohmic tests or other measurements indicative of battery performance are not opted)
- Verify that each trip coil is able to operate the circuit breaker, interrupting device, or mitigating device
- For electromechanical lock-out relays, electrical operation of electromechanical trip

Every 12 calendar years, verify the following:

- Microprocessor relay settings are as specified
- Operation of the microprocessor's relay inputs and outputs that are essential to proper functioning of the Protection System
- Acceptable measurement of power System input values seen by the microprocessor protective relay
- Verify that current and voltage signal values are provided to the protective relays
- Protection System component monitoring for the battery system signals are conveyed to a location where corrective action can be initiated
- The microprocessor relay alarm signals are conveyed to a location where corrective action can be initiated
- Verify all trip paths in the control circuitry associated with protective functions through the trip coil(s) of the circuit breakers or other interrupting devices
- Auxiliary outputs that are in the trip path shall be maintained as detailed in Table 1-5 of the standard under the 'Unmonitored Control Circuitry Associated with Protective Functions" section'
- Auxiliary outputs not in a trip path (i.e., annunciation or DME input) are not required, by this standard, to be checked

Example #2: A combination of monitored and unmonitored components within a given Protection System might be:

- A microprocessor relay with integral alarm that is not connected to SCADA. (unmonitored)
- Current and voltage signal values, with no monitoring, connected as inputs to that relay. (unmonitored)
- A vented lead-acid battery with a low voltage alarm for the station dc supply voltage and an unintentional grounds detection alarm connected to SCADA. (monitoring varies)
- A circuit breaker with a trip coil, with no circuits monitored. (unmonitored)

Given the particular components and conditions, and using the Table 1 (Maximum Allowable Testing Intervals and Maintenance Activities) and Table 2 (Alarming Paths and Monitoring), the particular components have maximum activity intervals of:

Every four calendar months, inspect:

- Electrolyte level (station dc supply voltage and unintentional ground detection is being maintained more frequently by the monitoring system)

Every 18 calendar months, verify/inspect the following:

- Battery bank trending of ohmic values or other measurements indicative of battery performance to station battery baseline (if performance tests are not opted)
- Battery charger float voltage
- Battery rack integrity
- Cell condition of all individual battery cells (where visible)
- Battery continuity
- Battery terminal connection resistance
- Battery cell-to-cell resistance (where available to measure)

Every six calendar years, verify/perform the following:

- Verify operation of the relay inputs and outputs that are essential to proper functioning of the Protection System
- Verify acceptable measurement of power system input values as seen by the relays
- Verify that each trip coil is able to operate the circuit breaker, interrupting device, or mitigating device
- For electromechanical lock-out relays, electrical operation of electromechanical trip
- Battery performance test (if internal ohmic tests are not opted)

Every 12 calendar years, verify the following:

- Current and voltage signal values are provided to the protective relays
- Protection System component monitoring for the battery system signals are conveyed to a location where corrective action can be initiated
- All trip paths in the control circuitry associated with protective functions through the trip coil(s) of the circuit breakers or other interrupting devices
- Auxiliary outputs that are in the trip path shall be maintained, as detailed in Table 1-5 of the standard under the Unmonitored Control Circuitry Associated with Protective Functions" section
- Auxiliary outputs not in a trip path (i.e., annunciation or DME input) are not required, by this standard, to be checked

Example #3: A combination of monitored and unmonitored components within a given Protection System might be:

- A microprocessor relay with alarm connected to SCADA to alert 24-hr staffed operations center; it has internal self diagnosis and alarms. (monitored)
- Current and voltage signal values, with monitoring, connected as inputs to that relay (monitored)

- Vented Lead-Acid battery without any alarms connected to SCADA (unmonitored)
- Circuit breaker with a trip coil, with no circuits monitored (unmonitored)

Given the particular components, conditions, and using the Table 1 (Maximum Allowable Testing Intervals and Maintenance Activities) and Table 2 (Alarming Paths and Monitoring), the particular components shall have maximum activity intervals of:

Every four calendar months, verify/inspect the following:

- Station dc supply voltage
- For unintentional grounds
- Electrolyte level

Every 18 calendar months, verify/inspect the following:

- Battery bank trending of ohmic values or other measurements indicative of battery performance to station battery baseline (if performance tests are not opted)
- Battery charger float voltage
- Battery rack integrity
- Battery continuity
- Battery terminal connection resistance
- Battery cell-to-cell resistance (where available to measure)
- Condition of all individual battery cells (where visible)

Every six calendar years, perform/verify the following:

- Battery performance test (if internal ohmic tests or other measurements indicative of battery performance are not opted)
- Verify that each trip coil is able to operate the circuit breaker, interrupting device, or mitigating device
- For electromechanical lock-out relays, electrical operation of electromechanical trip

Every 12 calendar years, verify the following:

- The microprocessor relay alarm signals are conveyed to a location where corrective action can be taken
- Microprocessor relay settings are as specified
- Operation of the microprocessor's relay inputs and outputs that are essential to proper functioning of the Protection System
- Acceptable measurement of power system input values seen by the microprocessor protective relay
- Verify all trip paths in the control circuitry associated with protective functions through the trip coil(s) of the circuit breakers or other interrupting devices

- Auxiliary outputs that are in the trip path shall be maintained, as detailed in Table 1-5 of the standard under the Unmonitored Control Circuitry Associated with Protective Functions section
- Auxiliary outputs not in a trip path (i.e. annunciation or DME input) are not required, by this standard, to be checked

Why do components have different maintenance activities and intervals if they are monitored?

The intent behind different activities and intervals for monitored equipment is to allow less frequent manual intervention when more information is known about the condition of Protection System components. Condition-Based Maintenance is a valuable asset to improve reliability.

Can all components in a Protection System be monitored?

No. For some components in a Protection System, monitoring will not be relevant. For example, a battery will always need some kind of inspection.

We have a 30-year-old oil circuit breaker with a red indicating lamp on the substation relay panel that is illuminated only if there is continuity through the breaker trip coil. There is no SCADA monitor or relay monitor of this trip coil. The line protection relay package that trips this circuit breaker is a microprocessor relay that has an integral alarm relay that will assert on a number of conditions that includes a loss of power to the relay. This alarm contact connects to our SCADA system and alerts our 24-hour operations center of relay trouble when the alarm contact closes. This microprocessor relay trips the circuit breaker only and does not monitor trip coil continuity or other things such as trip current. Are the components monitored or not? How often must I perform maintenance?

The protective relay is monitored and can be maintained every 12 years, or when an Unresolved Maintenance Issue arises. The control circuitry can be maintained every 12 years. The circuit breaker trip coil(s) has to be electrically operated at least once every six years.

What is a mitigating device?

A mitigating device is the device that acts to respond as directed by a Special Protection System. It may be a breaker, valve, distributed control system, or any variety of other devices.

8. Maximum Allowable Verification Intervals

The maximum allowable testing intervals and maintenance activities show how CBM with newer device types can reduce the need for many of the tests and site visits that older Protection System components require. As explained below, there are some sections of the Protection System that monitoring or data analysis may not verify. Verifying these sections of the Protection Systems requires some persistent TBM activity in the maintenance program. However, some of this TBM can be carried out remotely - for example, exercising a circuit breaker through the relay tripping circuits using the relay remote control capabilities can be used to verify function of one tripping path and proper trip coil operation, if there has been no Fault or routine operation to demonstrate performance of relay tripping circuits.

8.1 Maintenance Tests

Periodic maintenance testing is performed to ensure that the protection and control system is operating correctly after a time period of field installation. These tests may be used to ensure that individual components are still operating within acceptable performance parameters - this type of test is needed for components susceptible to degraded or changing characteristics due to aging and wear. Full system performance tests may be used to confirm that the total Protection System functions from measurement of power system values, to properly identifying Fault characteristics, to the operation of the interrupting devices.

8.1.1 Table of Maximum Allowable Verification Intervals

Table 1 (collectively known as Table 1, individually called out as Tables 1-1 through 1-5), Table 2 and Table 3 in the standard specify maximum allowable verification intervals for various generations of Protection Systems and categories of equipment that comprise Protection Systems. The right column indicates maintenance activities required for each category.

The types of components are illustrated in Figures 1 and 2 at the end of this paper. Figure 1 shows an example of telecommunications-assisted transmission Protection System comprising substation equipment at each terminal and a telecommunications channel for relaying between the two substations. Figure 2 shows an example of a generation Protection System. The various sub-systems of a Protection System that need to be verified are shown.

Non-distributed UFLS, UVLS, and SPS are additional categories of Table 1 that are not illustrated in these figures. Non-distributed UFLS, UVLS and SPS all use identical equipment as Protection Systems in the performance of their functions; and, therefore, have the same maintenance needs.

Distributed UFLS and UVLS Systems, which use local sensing on the distribution System and trip co-located non-BES interrupting devices, are addressed in Table 3 with reduced maintenance activities.

While it is easy to associate protective relays to multiple levels of monitoring, it is also true that most of the components that can make up a Protection System can also have technological advancements that place them into higher levels of monitoring.

To use the Maintenance Activities and Intervals Tables from PRC-005-2:

- First find the Table associated with your component. The tables are arranged in the order of mention in the definition of Protection System;

- Table 1-1 is for protective relays,
- Table 1-2 is for the associated communications systems,
- Table 1-3 is for current and voltage sensing devices,
- Table 1-4 is for station dc supply and
- Table 1-5 is for control circuits.
- Table 2, is for alarms; this was broken out to simplify the other tables.
- Table 3 is for components which make-up distributed UFLS and UVLS Systems.

- Next look within that table for your device and its degree of monitoring. The Tables have different hands-on maintenance activities prescribed depending upon the degree to which you monitor your equipment. Find the maintenance activity that applies to the monitoring level that you have on your piece of equipment.
- This Maintenance activity is the minimum maintenance activity that must be documented.
- If your Performance-Based Maintenance (PBM) plan requires <u>more activities,</u> then you must perform and document to this higher standard. (Note that this does not apply unless you utilize PBM.)
- After the maintenance activity is known, check the maximum maintenance interval; this time is the maximum time allowed between hands-on maintenance activity cycles of this component.
- If your Performance-Based Maintenance plan requires activities <u>more often</u> than the Tables maximum, then you must perform and document those activities to your more stringent standard. (Note that this does not apply unless you utilize PBM.)
- Any given component of a Protection System can be determined to have a degree of monitoring that may be different from another component within that same Protection System. For example, in a given Protection System it is possible for an entity to have a monitored protective relay and an unmonitored associated communications system; this combination would require hands-on maintenance activity on the relay at least once every 12 years and attention paid to the communications system as often as every four months.
- An entity does not have to utilize the extended time intervals made available by this use of condition-based monitoring. An easy choice to make is to simply utilize the unmonitored level of maintenance made available on each of the five Tables. While the maintenance activities resulting from this choice would require more maintenance man-hours, the maintenance requirements may be simpler to document and the resulting maintenance plans may be easier to create.

For each Protection System component, Table 1 shows maximum allowable testing intervals for the various degrees of monitoring. These degrees of monitoring, or levels, range from the legacy unmonitored through a system that is more comprehensively monitored.

It has been noted here that an entity may have a PSMP that is more stringent than PRC-005-2. There may be any number of reasons that an entity chooses a more stringent plan than the

minimums prescribed within PRC-005-2, most notable of which is an entity using performance based maintenance methodology. If an entity has a Performance-Based Maintenance program, then that plan must be followed, even if the plan proves to be more stringent than the minimums laid out in the Tables.

8.1.2 Additional Notes for Tables 1-1 through 1-5 and Table 3

1. For electromechanical relays, adjustment is required to bring measurement accuracy within the tolerance needed by the asset owner. Microprocessor relays with no remote monitoring of alarm contacts, etc, are unmonitored relays and need to be verified within the Table interval as other unmonitored relays but may be verified as functional by means other than testing by simulated inputs.

2. Microprocessor relays typically are specified by manufacturers as not requiring calibration, but acceptable measurement of power system input values must be verified (verification of the Analog to Digital [A/D] converters) within the Table intervals. The integrity of the digital inputs and outputs that are used as protective functions must be verified within the Table intervals.

3. Any Phasor Measurement Unit (PMU) function whose output is used in a Protection System or SPS (as opposed to a monitoring task) must be verified as a component in a Protection System.

4. In addition to verifying the circuitry that supplies dc to the Protection System, the owner must maintain the station dc supply. The most widespread station dc supply is the station battery and charger. Unlike most Protection System components, physical inspection of station batteries for signs of component failure, reduced performance, and degradation are required to ensure that the station battery is reliable enough to deliver dc power when required. IEEE Standards 450, 1188, and 1106 for vented lead-acid, valve-regulated lead-acid, and nickel-cadmium batteries, respectively (which are the most commonly used substation batteries on the NERC BES) have been developed as an important reference source of maintenance recommendations. The Protection System owner might want to follow the guidelines in the applicable IEEE recommended practices for battery maintenance and testing, especially if the battery in question is used for application requirements in addition to the protection and control demands covered under this standard. However, the Standard Drafting Team has tailored the battery maintenance and testing guidelines in PRC-005-2 for the Protection System owner which are application specific for the BES Facilities. While the IEEE recommendations are all encompassing, PRC-005-2 is a more economical approach while addressing the reliability requirements of the BES.

5. Aggregated small entities might distribute the testing of the population of UFLS/UVLS systems, and large entities will usually maintain a portion of these systems in any given year. Additionally, if relatively small quantities of such systems do not perform properly, it will not affect the integrity of the overall program. Thus, these distributed systems have decreased requirements as compared to other Protection Systems.

6. Voltage & current sensing device circuit input connections to the Protection System relays can be verified by (but not limited to) comparison of measured values on live circuits or by using test currents and voltages on equipment out of service for maintenance. The verification process can be automated or manual. The values should

be verified to be as expected (phase value and phase relationships are both equally important to verify).

7. "End-to-end test," as used in this Supplementary Reference, is any testing procedure that creates a remote input to the local communications-assisted trip scheme. While this can be interpreted as a GPS-type functional test, it is not limited to testing via GPS. Any remote scheme manipulation that can cause action at the local trip path can be used to functionally-test the dc control circuitry. A documented Real-time trip of any given trip path is acceptable in lieu of a functional trip test. It is possible, with sufficient monitoring, to be able to verify each and every parallel trip path that participated in any given dc control circuit trip. Or another possible solution is that a single trip path from a single monitored relay can be verified to be the trip path that successfully tripped during a Real-time operation. The variations are only limited by the degree of engineering and monitoring that an entity desires to pursue.
8. A/D verification may use relay front panel value displays, or values gathered via data communications. Groupings of other measurements (such as vector summation of bus feeder currents) can be used for comparison if calibration requirements assure acceptable measurement of power system input values.
9. Notes 1-8 attempt to describe some testing activities; they do not represent the only methods to achieve these activities, but rather some possible methods. Technological advances, ingenuity and/or industry accepted techniques can all be used to satisfy maintenance activity requirements; the standard is technology- and method-neutral in most cases.

8.1.3 Frequently Asked Questions:

What is meant by "Verify that settings are as specified" maintenance activity in Table 1-1?

Verification of settings is an activity directed mostly towards microprocessor- based relays. For relay maintenance departments that choose to test microprocessor-based relays in the same manner as electromechanical relays are tested, the testing process sometimes requires that some specific functions be disabled. Later tests might enable the functions previously disabled, but perhaps still other functions or logic statements were then masked out. It is imperative that, when the relay is placed into service, the settings in the relay be the settings that were intended to be in that relay or as the standard states "…settings are as specified."

Many of the microprocessor- based relays available today have software tools which provide this functionality and generate reports for this purpose.

For evidence or documentation of this requirement, a simple recorded acknowledgement that the settings were checked to be as specified is sufficient.

The drafting team was careful not to require "…that the relay settings be correct…" because it was believed that this might then place a burden of proof that the specified settings would result in the correct intended operation of the interrupting device. While that is a noble intention, the measurable proof of such a requirement is immense. The intent is that settings of the component be as specified at the conclusion of maintenance activities, whether those settings may have "drifted" since the prior maintenance or whether changes were made as part of the testing process.

Are electromechanical relays included in the "Verify that settings are as specified" maintenance activity in Table 1-1?

Verification of settings is an activity directed towards the application of protection related functions of microprocessor based relays. Electromechanical relays require calibration verification by voltage and/or current injection; and, thus, the settings are verified during calibration activity. In the example of a time-overcurrent relay, a minor deviation in time dial, versus the settings, may be acceptable, as long as the relay calibration is within accepted tolerances at the injected current amplitudes. A major deviation may require further investigation, as it could indicate a problem with the relay or an incorrect relay style for the application.

The verification of phase current and voltage measurements by comparison to other quantities seems reasonable. How, though, can I verify residual or neutral currents, or 3V0 voltages, by comparison, when my system is closely balanced?

Since these inputs are verified at commissioning, maintenance verification requires ensuring that phase quantities are as expected and that 3IO and 3VO quantities appear equal to or close to 0.

These quantities also may be verified by use of oscillographic records for connected microprocessor relays as recorded during system Disturbances. Such records may compare to similar values recorded at other locations by other microprocessor relays for the same event, or compared to expected values (from short circuit studies) for known Fault locations.

What does this Standard require for testing an auxiliary tripping relay?

Table 1 and Table 3 requires that a trip test must verify that the auxiliary tripping relay(s) and/or lockout relay(s) which are directly in a trip path from the protective relay to the interrupting device trip coil operate(s) electrically. Auxiliary outputs not in a trip path (i.e. annunciation or DME input) are not required, by this standard, to be checked.

Do I have to perform a full end-to-end test of a Special Protection System?

No. All portions of the SPS need to be maintained, and the portions must overlap, but the overall SPS does not need to have a single end-to-end test. In other words it may be tested in piecemeal fashion provided all of the pieces are verified.

What about SPS interfaces between different entities or owners?

As in all of the Protection System requirements, SPS segments can be tested individually, thus minimizing the need to accommodate complex maintenance schedules.

What do I have to do if I am using a phasor measurement unit (PMU) as part of a Protection System or Special Protection System?

Any Phasor Measurement Unit (PMU) function whose output is used in a Protection System or Special Protection System (as opposed to a monitoring task) must be verified as a component in a Protection System.

How do I maintain a Special Protection System or relay sensing for non-distributed UFLS or UVLS Systems?

Since components of the SPS, UFLS and UVLS are the same types of components as those in Protection Systems, then these components should be maintained like similar components used for other Protection System functions. In many cases the devices for SPS, UFLS and UVLS

are also used for other protective functions. The same maintenance activities apply with the exception that distributed systems (UFLS and UVLS) have fewer dc supply and control circuitry maintenance activity requirements.

For the testing of the output action, verification may be by breaker tripping, but may be verified in overlapping segments. For example, an SPS that trips a remote circuit breaker might be tested by testing the various parts of the scheme in overlapping segments. Another method is to document the Real-time tripping of an SPS scheme should that occur. Forced trip tests of circuit breakers (etc) that are a part of distributed UFLS or UVLS schemes are not required.

The established maximum allowable intervals do not align well with the scheduled outages for my power plant. Can I extend the maintenance to the next scheduled outage following the established maximum interval?

No. You must complete your maintenance within the established maximum allowable intervals in order to be compliant. You will need to schedule your maintenance during available outages to complete your maintenance as required, even if it means that you may do protective relay maintenance more frequently than the maximum allowable intervals. The maintenance intervals were selected with typical plant outages, among other things, in mind.

If I am unable to complete the maintenance, as required, due to a major natural disaster (hurricane, earthquake, etc.), how will this affect my compliance with this standard?

The Sanction Guidelines of the North American Electric Reliability Corporation, effective January 15, 2008, provides that the Compliance Monitor will consider extenuating circumstances when considering any sanctions.

What if my observed testing results show a high incidence of out-of-tolerance relays; or, even worse, I am experiencing numerous relay Misoperations due to the relays being out-of-tolerance?

The established maximum time intervals are mandatory only as a not-to-exceed limitation. The establishment of a maximum is measurable. But any entity can choose to test some or all of their Protection System components more frequently (or to express it differently, exceed the minimum requirements of the standard). Particularly if you find that the maximum intervals in the standard do not achieve your expected level of performance, it is understandable that you would maintain the related equipment more frequently. A high incidence of relay Misoperations is in no one's best interest.

We believe that the four-month interval between inspections is unneccessary. Why can we not perform these inspections twice per year?

The Standard Drafting Team, through the comment process, has discovered that routine monthly inspections are not the norm. To align routine station inspections with other important inspections, the four-month interval was chosen. In lieu of station visits, many activities can be accomplished with automated monitoring and alarming.

Our maintenance plan calls for us to perform routine protective relay tests every 3 years. If we are unable to achieve this schedule, but we are able to complete the procedures in less than the maximum time interval ,then are we in or out of compliance?

According to R3, if you have a time-based maintenance program, then you will be in violation of the standard only if you exceed the maximum maintenance intervals prescribed in the Tables. According to R4, if your device in question is part of a Performance-Based Maintenance program, then you will be in violation of the standard if you fail to meet your PSMP, even if you do not exceed the maximum maintenance intervals prescribed in the Tables. The intervals in the Tables are associated with TBM and CBM; Attachment A is associated with PBM.

Please provide a sample list of devices or systems that must be verified in a generator, generator step-up transformer, generator connected station service or generator connected excitation transformer to meet the requirements of this maintenance standard.

Examples of typical devices and systems that may directly trip the generator, or trip through a lockout relay, may include, but are not necessarily limited to:

- Fault protective functions, including distance functions, voltage-restrained overcurrent functions, or voltage-controlled overcurrent functions
- Loss-of-field relays
- Volts-per-hertz relays
- Negative sequence overcurrent relays
- Over voltage and under voltage protection relays
- Stator-ground relays
- Communications-based Protection Systems such as transfer-trip systems
- Generator differential relays
- Reverse power relays
- Frequency relays
- Out-of-step relays
- Inadvertent energization protection
- Breaker failure protection

For generator step-up, generator-connected station service transformers, or generator connected excitation transformers, operation of any of the following associated protective relays frequently would result in a trip of the generating unit; and, as such, would be included in the program:

- Transformer differential relays
- Neutral overcurrent relay
- Phase overcurrent relays

Relays which trip breakers serving station auxiliary Loads such as pumps, fans, or fuel handling equipment, etc., need not be included in the program, even if the loss of the those Loads could result in a trip of the generating unit. Furthermore, relays which provide protection to secondary unit substation (SUS) or low switchgear transformers and relays protecting other downstream plant electrical distribution system components are not included in the scope of

this program, even if a trip of these devices might eventually result in a trip of the generating unit. For example, a thermal overcurrent trip on the motor of a coal-conveyor belt could eventually lead to the tripping of the generator, but it does not cause the trip.

In the case where a plant does not have a generator connected station service transformer such that it is normally fed from a system connected station service transformer, is it still the drafting team's intent to exclude the Protection Systems for these system connected auxiliary transformers from scope even when the loss of the normal (system connected) station service transformer will result in a trip of a BES generating Facility?

The SDT does not intend that the system-connected station service transformers be included in the Applicability. The generator-connected station service transformers and generator connected excitation transformers are often connected to the generator bus directly without an interposing breaker; thus, the Protection Systems on these transformers will trip the generator as discussed in 4.2.5.1.

What is meant by "verify operation of the relay inputs and outputs that are essential to proper functioning of the Protection System?"

Any input or output (of the relay) that "affects the tripping" of the breaker is included in the scope of I/O of the relay to be verified. By "affects the tripping," one needs to realize that sometimes there are more inputs and outputs than simply the output to the trip coil. Many important protective functions include things like breaker fail initiation, zone timer initiation and sometimes even 52a/b contact inputs are needed for a protective relay to correctly operate.

Each input should be "picked up" or "turned on and off" and verified as changing state by the microprocessor of the relay. Each output should be "operated" or "closed and opened" from the microprocessor of the relay and the output should be verified to change state on the output terminals of the relay. One possible method of testing inputs of these relays is to "jumper" the needed dc voltage to the input and verify that the relay registered the change of state.

Electromechanical lock-out relays (86) (used to convey the tripping current to the trip coils) need to be electrically operated to prove the capability of the device to change state. These tests need to be accomplished at least every six years, unless PBM methodology is applied.

The contacts on the 86 or auxiliary tripping relays (94) that change state to pass on the trip current to a breaker trip coil need only be checked every 12 years with the control circuitry.

What is the difference between a distributed UFLS/UVLS and a non-distributed UFLS/UVLS scheme?

A distributed UFLS or UVLS scheme contains individual relays which make independent Load shed decisions based on applied settings and localized voltage and/or current inputs. A distributed scheme may involve an enable/disable contact in the scheme and still be considered a distributed scheme. A non-distributed UFLS or UVLS scheme involves a system where there is some type of centralized measurement and Load shed decision being made. A non-distributed UFLS/UVLS scheme is considered similar to an SPS scheme and falls under Table 1 for maintenance activities and intervals.

8.2 Retention of Records

PRC-005-1 describes a reporting or auditing cycle of one year and retention of records for three years. However, with a three-year retention cycle, the records of verification for a Protection System might be discarded before the next verification, leaving no record of what was done if a Misoperation or failure is to be analyzed.

PRC-005-2 corrects this by requiring:

The Transmission Owner, Generator Owner, and Distribution Provider shall each retain documentation of the two most recent performances of each distinct maintenance activity for the Protection System components, or to the previous scheduled (on-site) audit date, whichever is longer.

This requirement assures that the documentation shows that the interval between maintenance cycles correctly meets the maintenance interval limits. The requirement is actually alerting the industry to documentation requirements already implemented by audit teams. Evidence of compliance bookending the interval shows interval accomplished instead of proving only your planned interval.

The SDT is aware that, in some cases, the retention period could be relatively long. But, the retention of documents simply helps to demonstrate compliance.

8.2.1 Frequently Asked Questions:

Please use a specific example to demonstrate the data retention requirements.

The data retention requirements are intended to allow the availability of maintenance records to demonstrate that the time intervals in your maintenance plan were upheld. For example: "Company A" has a maintenance plan that requires its electromechanical protective relays be tested every three calendar years, with a maximum allowed grace period of an additional 18 months. This entity would be required to maintain its records of maintenance of its last two routine scheduled tests. Thus, its test records would have a latest routine test, as well as its previous routine test. The interval between tests is, therefore, provable to an auditor as being within "Company A's" stated maximum time interval of 4.5 years.

The intent is not to require three test results proving two time intervals, but rather have two test results proving the last interval. The drafting team contends that this minimizes storage requirements, while still having minimum data available to demonstrate compliance with time intervals.

If an entity prefers to utilize Performance-Based Maintenance, then statistical data may well be retained for extended periods to assist with future adjustments in time intervals.

If an equipment item is replaced, then the entity can restart the maintenance-time-interval-clock if desired; however, the replacement of equipment does not remove any documentation requirements that would have been required to verify compliance with time-interval requirements. In other words, do not discard maintenance data that goes to verify your work.

The retention of documentation for new and/or replaced equipment is all about proving that the maintenance intervals had been in compliance. For example, a long-range plan of upgrades might lead an entity to ignore required maintenance; retaining the evidence of prior maintenance that existed before any retirements and upgrades proves compliance with the standard.

What does this Maintenance Standard say about commissioning? Is it necessary to have documentation in your maintenance history of the completion of commission testing?

This standard does not establish requirements for commission testing. Commission testing includes all testing activities necessary to conclude that a Facility has been built in accordance with design. While a thorough commission testing program would include, either directly or indirectly, the verification of all those Protection System attributes addressed by the maintenance activities specified in the Tables of PRC-005-2, verification of the adequacy of initial installation necessitates the performance of testing and inspections that go well beyond these routine maintenance activities. For example, commission testing might set baselines for future tests; perform acceptance tests and/or warranty tests; utilize testing methods that are not generally done routinely like staged-Fault-tests.

However, many of the Protection System attributes which are verified during commission testing are not subject to age related or service related degradation, and need not be re-verified within an ongoing maintenance program. Example – it is not necessary to re-verify correct terminal strip wiring on an ongoing basis.

PRC-005-2 assumes that thorough commission testing was performed prior to a Protection System being placed in service. PRC-005-2 requires performance of maintenance activities that are deemed necessary to detect and correct plausible age and service related degradation of components, such that a properly built and commission tested Protection System will continue to function as designed over its service life.

It should be noted that commission testing frequently is performed by a different organization than that which is responsible for the ongoing maintenance of the Protection System. Furthermore, the commission testing activities will not necessarily correlate directly with the maintenance activities required by the standard. As such, it is very likely that commission testing records will deviate significantly from maintenance records in both form and content; and, therefore, it is not necessary to maintain commission testing records within the maintenance program documentation.

Notwithstanding the differences in records, an entity would be wise to retain commissioning records to show a maintenance start date. (See below). An entity that requires that their commissioning tests have, at a minimum, the requirements of PRC-005-2 would help that entity prove time interval maximums by setting the initial time clock.

How do you determine the initial due date for maintenance?

The initial due date for maintenance should be based upon when a Protection System was tested. Alternatively, an entity may choose to use the date of completion of the commission testing of the Protection System component and the system was placed into service as the starting point in determining its first maintenance due dates. Whichever method is chosen, for newly installed Protection Systems the components should not be placed into service until minimum maintenance activities have taken place.

It is conceivable that there can be a (substantial) difference in time between the date of testing, as compared to the date placed into service. The use of the “Calendar Year” language can help determine the next due date without too much concern about being non-compliant for missing test dates by a small amount (provided your dates are not already at the end of a year). However, if there is a substantial amount of time difference between testing and in-service

dates, then the testing date should be followed because it is the degradation of components that is the concern. While accuracy fluctuations may decrease when components are not energized, there are cases when degradation can take place, even though the device is not energized. Minimizing the time between commissioning tests and in-service dates will help.

If I miss two battery inspections four times out of 100 Protection System components on my transmission system, does that count as 2% or 8% when counting Violation Severity Level (VSL) for R3?

The entity failed to complete its scheduled program on two of its 100 Protection System components, which would equate to 2% for application to the VSL Table for Requirement R3. This VSL is written to compare missed components to total components. In this case two components out of 100 were missed, or 2%.

How do I achieve a "grace period" without being out of compliance?

The objective here is to create a time extension within your own PSMP that still does not violate the maximum time intervals stated in the standard. Remember that the maximum time intervals listed in the Tables cannot be extended.

For the purposes of this example, concentrating on just unmonitored protective relays – Table 1-1 specifies a maximum time interval (between the mandated maintenance activities) of six calendar years. Your plan must ensure that your unmonitored relays are tested at least once every six calendar years. You could, within your PSMP, require that your unmonitored relays be tested every four calendar years, with a maximum allowable time extension of 18 calendar months. This allows an entity to have deadlines set for the auto-generation of work orders, but still has the flexibility in scheduling complex work schedules. This also allows for that 18 calendar months to act as a buffer, in effect a grace period within your PSMP, in the event of unforeseen events. You will note that this example of a maintenance plan interval has a planned time of four years; it also has a built-in time extension allowed within the PSMP, and yet does not exceed the maximum time interval allowed by the standard. So while there are no time extensions allowed beyond the standard, an entity can still have substantial flexibility to maintain their Protection System components.

8.3 Basis for Table 1 Intervals

When developing the original *Protection System Maintenance – A Technical Reference* in 2007, the SPCTF collected all available data from Regional Entities (REs) on time intervals recommended for maintenance and test programs. The recommendations vary widely in categorization of relays, defined maintenance actions, and time intervals, precluding development of intervals by averaging. The SPCTF also reviewed the 2005 Report [2] of the IEEE Power System Relaying Committee Working Group I-17 (Transmission Relay System Performance Comparison). Review of the I-17 report shows data from a small number of utilities, with no company identification or means of investigating the significance of particular results.

To develop a solid current base of practice, the SPCTF surveyed its members regarding their maintenance intervals for electromechanical and microprocessor relays, and asked the members to also provide definitively-known data for other entities. The survey represented 470 GW of peak Load, or 4% of the NERC peak Load. Maintenance interval averages were compiled by weighting reported intervals according to the size (based on peak Load) of the reporting

utility. Thus, the averages more accurately represent practices for the large populations of Protection Systems used across the NERC regions.

The results of this survey with weighted averaging indicate maintenance intervals of five years for electromechanical or solid state relays, and seven years for unmonitored microprocessor relays.

A number of utilities have extended maintenance intervals for microprocessor relays beyond seven years, based on favorable experience with the particular products they have installed. To provide a technical basis for such extension, the SPCTF authors developed a recommendation of 10 years using the Markov modeling approach from [1], as summarized in Section 8.4. The results of this modeling depend on the completeness of self-testing or monitoring. Accordingly, this extended interval is allowed by Table 1, only when such relays are monitored as specified in the attributes of monitoring contained in Tables 1-1 through 1-5 and Table 2. Monitoring is capable of reporting Protection System health issues that are likely to affect performance within the 10 year time interval between verifications.

It is important to note that, according to modeling results, Protection System availability barely changes as the maintenance interval is varied below the 10-year mark. Thus, reducing the maintenance interval does not improve Protection System availability. With the assumptions of the model regarding how maintenance is carried out, reducing the maintenance interval actually degrades Protection System availability.

8.4 Basis for Extended Maintenance Intervals for Microprocessor Relays

Table 1 allows maximum verification intervals that are extended based on monitoring level. The industry has experience with self-monitoring microprocessor relays that leads to the Table 1 value for a monitored relay, as explained in Section 8.3. To develop a basis for the maximum interval for monitored relays in their *Protection System Maintenance – A Technical Reference*, the SPCTF used the methodology of Reference [1], which specifically addresses optimum routine maintenance intervals. The Markov modeling approach of [1] is judged to be valid for the design and typical failure modes of microprocessor relays.

The SPCTF authors ran test cases of the Markov model to calculate two key probability measures:

- Relay Unavailability - the probability that the relay is out of service due to failure or maintenance activity while the power system Element to be protected is in service.
- Abnormal Unavailability - the probability that the relay is out of service due to failure or maintenance activity when a Fault occurs, leading to failure to operate for the Fault.

The parameter in the Markov model that defines self-monitoring capability is ST (for self test). ST = 0 if there is no self-monitoring; ST = 1 for full monitoring. Practical ST values are estimated to range from .75 to .95. The SPCTF simulation runs used constants in the Markov model that were the same as those used in [1] with the following exceptions:

Sn, Normal tripping operations per hour = 21600 (reciprocal of normal Fault clearing time of 10 cycles)

Sb, Backup tripping operations per hour = 4320 (reciprocal of backup Fault clearing time of 50 cycles)

Rc, Protected component repairs per hour = 0.125 (8 hours to restore the power system)

Rt, Relay routine tests per hour = 0.125 (8 hours to test a Protection System)

Rr, Relay repairs per hour = 0.08333 (12 hours to complete a Protection System repair after failure)

Experimental runs of the model showed low sensitivity of optimum maintenance interval to these parameter adjustments.

The resulting curves for relay unavailability and abnormal unavailability versus maintenance interval showed a broad minimum (optimum maintenance interval) in the vicinity of 10 years – the curve is flat, with no significant change in either unavailability value over the range of 9, 10, or 11 years. This was true even for a relay mean time between Failures (MTBF) of 50 years, much lower than MTBF values typically published for these relays. Also, the Markov modeling indicates that both the relay unavailability and abnormal unavailability actually become higher with more frequent testing. This shows that the time spent on these more frequent tests yields no failure discoveries that approach the negative impact of removing the relays from service and running the tests.

The PSMT SDT discussed the practical need for "time-interval extensions" or "grace periods" to allow for scheduling problems that resulted from any number of business contingencies. The time interval discussions also focused on the need to reflect industry norms surrounding Generator outage frequencies. Finally, it was again noted that FERC Order 693 demanded maximum time intervals. "Maximum time intervals" by their very term negates any "time-interval extension" or "grace periods." To recognize the need to follow industry norms on Generator outage frequencies and accommodate a form of time-interval extension, while still following FERC Order 693, the Standard Drafting Team arrived at a six-year interval for the electromechanical relay, instead of the five-year interval arrived at by the SPCTF. The PSMT SDT has followed the FERC directive for a *maximum* time interval and has determined that no extensions will be allowed. Six years has been set for the maximum time interval between manual maintenance activities. This maximum time interval also works well for maintenance cycles that have been in use in generator plants for decades.

For monitored relays, the PSMT SDT notes that the SPCTF called for 10 years as the interval between maintenance activities. This 10-year interval was chosen, even though there was "…no significant change in unavailability value over the range of 9, 10, or 11 years. This was true even for a relay Mean Time between Failures (MTBF) of 50 years…" The Standard Drafting Team again sought to align maintenance activities with known successful practices and outage schedules. The Standard does not allow extensions on any component of the Protection System; thus, the maximum allowed interval for these components has been set to 12 years. Twelve years also fits well into the traditional maintenance cycles of both substations and generator plants.

Also of note is the Table's use of the term "Calendar" in the column for "Maximum Maintenance Interval." The PSMT SDT deemed it necessary to include the term "Calendar" to facilitate annual maintenance planning, scheduling and implementation. This need is the result of known occurrences of system requirements that could cause maintenance schedules to be missed by a few days or weeks. The PSMT SDT chose the term "Calendar" to preclude the need to have schedules be met to the day. An electromechanical protective relay that is maintained in year number one need not be revisited until six years later (year number seven). For

example, a relay was maintained April 10, 2008; maintenance would need to be completed no later than December 31, 2014.

Though not a requirement of this standard, to stay in line with many Compliance Enforcement Agencies audit processes an entity should define, within their own PSMP, the entity's use of terms like annual, calendar year, etc. Then, once this is within the PSMP, the entity should abide by their chosen language.

9. Performance-Based Maintenance Process

In lieu of using the Table 1 intervals, a Performance-Based Maintenance process may be used to establish maintenance intervals (*PRC-005 Attachment A Criteria for a Performance-Based Protection System Maintenance Program*). A Performance-Based Maintenance process may justify longer maintenance intervals, or require shorter intervals relative to Table 1. In order to use a Performance-Based Maintenance process, the documented maintenance program must include records of repairs, adjustments, and corrections to covered Protection Systems in order to provide historical justification for intervals, other than those established in Table 1. Furthermore, the asset owner must regularly analyze these records of corrective actions to develop a ranking of causes. Recurrent problems are to be highlighted, and remedial action plans are to be documented to mitigate or eliminate recurrent problems.

Entities with Performance-Based Maintenance track performance of Protection Systems, demonstrate how they analyze findings of performance failures and aberrations, and implement continuous improvement actions. Since no maintenance program can ever guarantee that no malfunction can possibly occur, documentation of a Performance-Based Maintenance program would serve the utility well in explaining to regulators and the public a Misoperation leading to a major System outage event.

A Performance-Based Maintenance program requires auditing processes like those included in widely used industrial quality systems (such as ***ISO 9001-2000, Quality Management Systems — Requirements;*** or applicable parts of the NIST Baldridge National Quality Program). The audits periodically evaluate:

- The completeness of the documented maintenance process
- Organizational knowledge of and adherence to the process
- Performance metrics and documentation of results
- Remediation of issues
- Demonstration of continuous improvement.

In order to opt into a Performance-Based Maintenance (PBM) program, the asset owner must first sort the various Protection System components into population segments. Any population segment must be comprised of at least 60 individual units; if any asset owner opts for PBM, but does not own 60 units to comprise a population, then that asset owner may combine data from other asset owners until the needed 60 units is aggregated. Each population segment must be composed of a grouping of Protection Systems or components of a consistent design standard or particular model or type from a single manufacturer and subjected to similar environmental factors. For example: One segment cannot be comprised of both GE & Westinghouse electro-mechanical lock-out relays; likewise, one segment cannot be comprised of 60 GE lock-out relays, 30 of which are in a dirty environment, and the remaining 30 from a clean environment. This PBM process cannot be applied to batteries, but can be applied to all other components of a Protection System, including (but not limited to) specific battery chargers, instrument transformers, trip coils and/or control circuitry (etc.).

9.1 Minimum Sample Size

Large Sample Size

An assumption that needs to be made when choosing a sample size is "the sampling distribution of the sample mean can be approximated by a normal probability distribution." The Central Limit Theorem states: "In selecting simple random samples of size *n* from a population, the sampling distribution of the sample mean *x* can be approximated by a normal probability distribution as the sample size becomes large." (Essentials of Statistics for Business and Economics, Anderson, Sweeney, Williams, 2003.)

To use the Central Limit Theorem in statistics, the population size should be large. The references below are supplied to help define what is large.

> "… whenever we are using a large simple random sample (rule of thumb: n>=30), the central limit theorem enables us to conclude that the sampling distribution of the sample mean can be approximated by a normal distribution." (Essentials of Statistics for Business and Economics, Anderson, Sweeney, Williams, 2003.)
>
> "If samples of size n, when n>=30, are drawn from any population with a mean *u* and a standard deviation σ, the sampling distribution of sample means approximates a normal distribution. The greater the sample size, the better the approximation." (Elementary Statistics - Picturing the World, Larson, Farber, 2003.)
>
> "The sample size is large (generally n>=30)… (Introduction to Statistics and Data Analysis - Second Edition, Peck, Olson, Devore, 2005.)
>
> "… the normal is often used as an approximation to the *t* distribution in a test of a null hypothesis about the mean of a normally distributed population when the population variance is estimated from a relatively large sample. A sample size exceeding 30 is often given as a minimal size in this connection." (Statistical Analysis for Business Decisions, Peters, Summers, 1968.)

Error of Distribution Formula

Beyond the large sample size discussion above, a sample size requirement can be estimated using the bound on the Error of Distribution Formula when the expected result is of a "Pass/Fail" format and will be between 0 and 1.0.

The Error of Distribution Formula is:

$$B = z\sqrt{\frac{\pi(1-\pi)}{n}}$$

Where:

B = bound on the error of distribution (allowable error)

z = standard error

π = expected failure rate

n = sample size required

Solving for n provides:

$$n = \pi(1-\pi)\left(\frac{z}{B}\right)^2$$

Minimum Population Size to use Performance-Based Program

One entity's population of components should be large enough to represent a sizeable sample of a vendor's overall population of manufactured devices. For this reason, the following assumptions are made:

B = 5%

z = 1.96 (This equates to a 95% confidence level)

π = 4%

Using the equation above, n=59.0.

Minimum Sample Size to evaluate Performance-Based Program

The number of components that should be included in a sample size for evaluation of the appropriate testing interval can be smaller because a lower confidence level is acceptable since the sample testing is repeated or updated annually. For this reason, the following assumptions are made:

B = 5%

z = 1.44 (85% confidence level)

π = 4%

Using the equation above, n=31.8.

Recommendation

Based on the above discussion, a sample size should be at least 30 to allow use of the equation mentioned. Using this and the results of the equation, the following numbers are recommended (and required within the standard):

Minimum Population Size to use Performance-Based Maintenance Program = 60

Minimum Sample Size to evaluate Performance-Based Program = 30.

Once the population segment is defined, then maintenance must begin within the intervals as outlined for the device described in the Tables 1-1 through 1-5. Time intervals can be lengthened provided the last year's worth of components tested (or the last 30 units maintained, whichever is more) had fewer than 4%Countable Events. It is notable that 4% is specifically chosen because an entity with a small population (30 units) would have to adjust its time intervals between maintenance if more than one Countable Event was found to have occurred during the last analysis period. A smaller percentage would require that entity to adjust the time interval between maintenance activities if even one unit is found out of tolerance or causes a Misoperation.

The minimum number of units that can be tested in any given year is 5% of the population. Note that this 5% threshold sets a practical limitation on total length of time between intervals at 20 years.

If at any time the number of Countable Events equals or exceeds 4% of the last year's tested components (or the last 30 units maintained, whichever is more), then the time period between manual maintenance activities must be decreased. There is a time limit on reaching the decreased time at which the Countable Events is less than 4%; this must be attained within three years.

9.2 Frequently Asked Questions:

I'm a small entity and cannot aggregate a population of Protection System components to establish a segment required for a Performance-Based Protection System Maintenance Program. How can I utilize that opportunity?

Multiple asset owning entities may aggregate their individually owned populations of individual Protection System components to create a segment that crosses ownership boundaries. All entities participating in a joint program should have a single documented joint management process, with consistent Protection System Maintenance Programs (practices, maintenance intervals and criteria), for which the multiple owners are individually responsible with respect to the requirements of the Standard. The requirements established for Performance-Based Maintenance must be met for the overall aggregated program on an ongoing basis.

The aggregated population should reflect all factors that affect consistent performance across the population, including any relevant environmental factors such as geography, power-plant vs. substation, and weather conditions.

Can an owner go straight to a Performance-Based Maintenance program schedule, if they have previously gathered records?

Yes. An owner can go to a Performance-Based Maintenance program immediately. The owner will need to comply with the requirements of a Performance-Based Maintenance program as listed in the Standard. Gaps in the data collected will not be allowed; therefore, if an owner finds that a gap exists such that they cannot prove that they have collected the data as required for a Performance-Based Maintenance program then they will need to wait until they can prove compliance.

When establishing a Performance-Based Maintenance program, can I use test data from the device manufacturer, or industry survey results, as results to help establish a basis for my Performance-Based intervals?

No, you must use actual in-service test data for the components in the segment.

What types of Misoperations or events are not considered Countable Events in the Performance-Based Protection System Maintenance (PBM) Program?

Countable Events are intended to address conditions that are attributed to hardware failure or calibration failure; that is, conditions that reflect deteriorating performance of the component. These conditions include any condition where the device previously worked properly, then, due to changes within the device, malfunctioned or degraded to the point that re-calibration (to within the entity's tolerance) was required.

For this purpose of tracking hardware issues, human errors resulting in Protection System Misoperations during system installation or maintenance activities are not considered Countable Events. Examples of excluded human errors include relay setting errors, design

errors, wiring errors, inadvertent tripping of devices during testing or installation, and misapplication of Protection System components. Examples of misapplication of Protection System components include wrong CT or PT tap position, protective relay function misapplication, and components not specified correctly for their installation. Obviously, if one is setting up relevant data about hardware failures then human failures should be eliminated from the hardware performance analysis.

One example of human-error is not pertinent data might be in the area of testing "86" lock-out relays (LOR). "Entity A" has two types of LOR's type "X" and type "Y"; they want to move into a performance based maintenance interval. They have 1000 of each type, so the population variables are met. During electrical trip testing of all of their various schemes over the initial six-year interval they find zero type "X" failures, but human error led to tripping a BES Element 100 times; they find 100 type "Y" failures and had an additional 100 human-error caused tripping incidents. In this example the human-error caused Misoperations should not be used to judge the performance of either type of LOR. Analysis of the data might lead "Entity A" to change time intervals. Type "X" LOR can be placed into extended time interval testing because of its low failure rate (zero failures) while Type "Y" would have to be tested more often than every 6 calendar years (100 failures divided by 1000 units exceeds the 4% tolerance level).

Certain types of Protection System component errors that cause Misoperations are not considered Countable Events. Examples of excluded component errors include device malfunctions that are correctable by firmware upgrades and design errors that do not impact protection function.

What are some examples of methods of correcting segment perfomance for Performance-Based Maintenance?

There are a number of methods that may be useful for correcting segment performance for mal-performing segments in a Performance-Based Maintenance system. Some examples are listed below.

- The maximum allowable interval, as established by the Performance-Based Maintenance system, can be decreased. This may, however, be slow to correct the performance of the segment.
- Identifiable sub-groups of components within the established segment, which have been identified to be the mal-performing portion of the segment, can be broken out as an independent segment for target action. Each resulting segment must satisfy the minimum population requirements for a Performance-Based Maintenance program in order to remain within the program.
- Targeted corrective actions can be taken to correct frequently occurring problems. An example would be replacement of capacitors within electromechanical distance relays if bad capacitors were determined to be the cause of the mal-performance.
- components within the mal-performing segment can be replaced with other components (electromechanical distance relays with microprocessor relays, for example) to remove the mal-performing segment.

If I find (and correct) a Unresolved Maintenance Issue as a result of a Misoperation investigation (Re: PRC-004), how does this affect my Performance-Based Maintenance program?

If you perform maintenance on a Protection System component for any reason (including as part of a PRC-004 required Misoperation investigation/corrective action), the actions performed can count as a maintenance activity provided the activities in the relevant Tables have been done, and, if you desire, "reset the clock" on everything you've done. In a Performance-Based Maintenance program, you also need to record the Unresolved Maintenance Issue as a Countable Event within the relevant component group segment and use it in the analysis to determine your correct Performance-Based Maintenance interval for that component group. Note that "resetting the clock" should not be construed as interfering with an entity's routine testing schedule because the "clock-reset" would actually make for a decreased time interval by the time the next routine test schedule comes around.

For example a relay scheme, consisting of four relays, is tested on 1-1-11 and the PSMP has a time interval of 3 calendar years with an allowable extension of 1 calendar year. The relay would be due again for routine testing before the end of the year 2015. This mythical relay scheme has a Misoperation on 6-1-12 that points to one of the four relays as bad. Investigation proves a bad relay and a new one is tested and installed in place of the original. This replacement relay actually could be retested before the end of the year 2016 (clock-reset) and not be out of compliance. This requires tracking maintenance by individual relays and is allowed. However, many companies schedule maintenance in other ways like by substation or by circuit breaker or by relay scheme. By these methods of tracking maintenance that "replaced relay" will be retested before the end of the year 2015. This is also acceptable. In no case was a particular relay tested beyond the PSMP of four years max, nor was the 6 year max of the Standard exceeded. The entity can reset the clock if they desire or the entity can continue with original schedules and, in effect, test even more frequently.

Why are batteries excluded from PBM? What about exclusion of batteries from condition based maintenance?

Batteries are the only element of a Protection System that is a perishable item with a shelf life. As a perishable item batteries require not only a constant float charge to maintain their freshness (charge), but periodic inspection to determine if there are problems associated with their aging process and testing to see if they are maintaining a charge or can still deliver their rated output as required.

Besides being perishable, a second unique feature of a battery that is unlike any other Protection System element is that a battery uses chemicals, metal alloys, plastics, welds, and bonds that must interact with each other to produce the constant dc source required for Protection Systems, undisturbed by ac system Disturbances.

No type of battery manufactured today for Protection System application is free from problems that can only be detected over time by inspection and test. These problems can arise from variances in the manufacturing process, chemicals and alloys used in the construction of the individual cells, quality of welds and bonds to connect the components, the plastics used to make batteries and the cell forming process for the individual battery cells.

Other problems that require periodic inspection and testing can result from transportation from the factory to the job site, length of time before a charge is put on the battery, the method of installation, the voltage level and duration of equalize charges, the float voltage level used, and the environment that the battery is installed in.

All of the above mentioned factors and several more not discussed here are beyond the control of the Functional Entities that want to use a Performance-Based Protection System Maintenance (PBM) program. These inherent variances in the aging process of a battery cell make establishment of a designated segment based on manufacturer and type of battery impossible.

The whole point of PBM is that if all variables are isolated then common aging and performance criteria would be the same. However, there are too many variables in the electrochemical process to completely isolate all of the performance-changing criteria.

Similarly, Functional Entities that want to establish a condition-based maintenance program using the highest levels of monitoring, resulting in the least amount of hands-on maintenance activity, cannot completely eliminate some periodic maintenance of the battery used in a station dc supply. Inspection of the battery is required on a Maximum Maintenance Interval listed in the tables due to the aging processes of station batteries. However, higher degrees of monitoring of a battery can eliminate the requirement for some periodic testing and some inspections (see Table 1-4).

Please provide an example of the calculations involved in extending maintenance time intervals using PBM.

Entity has 1000 GE-HEA lock-out relays; this is greater than the minimum sample requirement of 60. They start out testing all of the relays within the prescribed Table requirements (6 year max) by testing the relays every 5 years. The entity's plan is to test 200 units per year; this is greater than the minimum sample size requirement of 30. For the sake of example only the following will show 6 failures per year, reality may well have different numbers of failures every year. PBM requires annual assessment of failures found per units tested. After the first year of tests the entity finds 6 failures in the 200 units tested. 6/200= 3% failure rate. This entity is now allowed to extend the maintenance interval if they choose. The entity chooses to extend the maintenance interval of this population segment out to 10 years. This represents a rate of 100 units tested per year; entity selects 100 units to be tested in the following year. After that year of testing these 100 units the entity again finds 6 failed units. 6/100= 6% failures. This entity has now exceeded the acceptable failure rate for these devices and must accelerate testing of all of the units at a higher rate such that the failure rate is found to be less than 4% per year; the entity has three years to get this failure rate down to 4% or less (per year). In response to the 6% failure rate, the entity decreases the testing interval to 8 years. This means that they will now test 125 units per year (1000/8). The entity has just two years left to get the test rate corrected.

After a year, they again find six failures out of the 125 units tested. 6/125= 5% failures. In response to the 5% failure rate, the entity decreases the testing interval to seven years. This means that they will now test 143 units per year (1000/7). The entity has just one year left to get the test rate corrected. After a year, they again find six failures out of the 143 units tested. 6/143= 4.2% failures.

(Note that the entity has tried five years and they were under the 4% limit and they tried seven years and they were over the 4% limit. They must be back at 4% failures or less in the next year so they might simply elect to go back to five years.)

Instead, in response to the 5% failure rate, the entity decreases the testing interval to six years. This means that they will now test 167 units per year (1000/6). After a year, they again find six

failures out of the 167 units tested. 6/167= 3.6% failures. Entity found that they could maintain the failure rate at no more than 4% failures by maintaining the testing interval at six years or less. Entity chose six-year interval and effectively extended their TBM (five years) program by 20%.

A note of practicality is that an entity will probably be in better shape to lengthen the intervals between tests if the failure rate is less than 2%. But the requirements allow for annual adjustments, if the entity desires. As a matter of maintenance management, an ever-changing test rate (units tested/year) may be un-workable.

Note that the "5% of components" requirement effectively sets a practical limit of 20 year maximum PBM interval. Also of note is the "3 years" requirement; an entity might arbitrarily extend time intervals from six years to 20 years. In the event that an entity finds a failure rate greater than 4%, then the test rate must be accelerated such that within three years the failure rate must be brought back down to 4% or less.

Here is a table that demonstrates the values discussed:

Year #	Total Population (P)	Test Interval (I)	Units to be Tested (U= P/I)	# of Failures Found (F)	Failure Rate (=F/U)	Decision to Change Interval Yes or No	Interval Chosen
1	1000	5 yrs	200	6	3%	Yes	10 yrs
2	1000	10 yrs	100	6	6%	Yes	8 yrs
3	1000	8 yrs	125	6	5%	Yes	7 yrs
4	1000	7 yrs	143	6	4.2%	Yes	6 yrs
5	1000	6 yrs	167	6	3.6%	No	6 yrs

Please provide an example of the calculations involved in extending maintenance time intervals using PBM for control circuitry.

Note that the following example captures "Control Circuitry" as all of the trip paths associated with a particular trip coil of a circuit breaker. An entity is not restricted to this method of counting control circuits. Perhaps another method an entity would prefer would be to simply track every individual (parallel) trip path. Or perhaps another method would be to track all of the trip outputs from a specific (set) of relays protecting a specific element. Under the included definition of "component":

The designation of what constitutes a control circuit component is very dependent upon how an entity performs and tracks the testing of the control circuitry. Some entities test their control circuits on a breaker basis whereas others test their circuitry on a local zone of protection basis. Thus, entities are allowed the latitude to designate their own definitions of control circuit components. Another example of where the entity has some discretion on determining what constitutes a single component is the voltage and current sensing devices, where the entity may choose either to designate a full three-phase set of such devices or a single device as a single component.

And in Attachment A (PBM) the definition of Segment:

Segment – *Protection Systems or components of a consistent design standard, or a particular model or type from a single manufacturer that typically share other common elements. Consistent performance is expected across the entire population of a segment. A segment must contain at least sixty (60) individual components.*

Example:

Entity has 1,000 circuit breakers, all of which have two trip coils, for a total of 2,000 trip coils; if all circuitry was designed and built with a consistent (internal entity) standard, then this is greater than the minimum sample requirement of 60.

For the sake of further example, the following facts are given:

Half of all relay panels (500) were built 40 years ago by an outside contractor, consisted of asbestos wrapped 600V-insulation panel wiring, and the cables exiting the control house are THHN pulled in conduit direct to exactly half of all of the various circuit breakers. All of the relay panels and cable pulls were built with consistent standards and consistent performance standard expectations within the segment (which is greater than 60). Each relay panel has redundant microprocessor (MPC) relays (retrofitted); each MPC relay supplies an individual trip output to each of the two trip coils of the assigned circuit breaker.

Approximately 35 years ago, the entity developed their own internal construction crew and now builds all of their own relay panels from parts supplied from vendors that meet the entity's specifications, including SIS 600V insulation wiring and copper-sheathed cabling within the direct conduits to circuit breakers. The construction crew uses consistent standards in the construction. This newer segment of their control circuitry population is different than the original segment, consistent (standards, construction and performance expectations) within the new segment and constitutes the remainder of the entity's population (another 500 panels and the cabling to the remaining 500 circuit breakers). Each relay panel has redundant microprocessor (MPC) relays; each MPC relay supplies an individual trip output to each of the two trip coils of the assigned circuit breaker. Every trip path in this newer segment has a device

that monitors the voltage directly across the trip contacts of the MPC relays and alarms via RTU and SCADA to the operations control room. This monitoring device, when not in alarm, demonstrates continuity all the way through the trip coil, cabling and wiring back to the trip contacts of the MPC relay.

The entity is tracking 2,000 trip coils (each consisting of multiple trip paths) in each of these two segments. But half of all of the trip paths are monitored; therefore, the trip paths are continuously tested and the circuit will alarm when there is a failure. These alarms have to be verified every 12 years for correct operation.

The entity now has 1,000 trip coils (and associated trip paths) remaining that they have elected to count as control circuits. The entity has instituted a process that requires the verification of every trip path to each trip coil (one unit), including the electrical activation of the trip coil. (The entity notes that the trip coils will have to be tripped electrically more often than the trip path verification, and is taking care of this activity through other documentation of Real-time Fault operations.)

They start out testing all of the trip coil circuits within the prescribed Table requirements (12-year max) by testing the trip circuits every 10 years. The entity's plan is to test 100 units per year; this is greater than the minimum sample size requirement of 30. For the sake of example only, the following will show three failures per year; reality may well have different numbers of failures every year. PBM requires annual assessment of failures found per units tested. After the first year of tests, the entity finds three failures in the 100 units tested. 3/100= 3% failure rate.

This entity is now allowed to extend the maintenance interval, if they choose. The entity chooses to extend the maintenance interval of this population segment out to 20 years. This represents a rate of 50 units tested per year; entity selects 50 units to be tested in the following year. After that year of testing these 50 units, the entity again finds three failed units. 3/50= 6% failures.

This entity has now exceeded the acceptable failure rate for these devices and must accelerate testing of all of the units at a higher rate, such that the failure rate is found to be less than 4% per year; the entity has three years to get this failure rate down to 4% or less (per year).

In response to the 6% failure rate, the entity decreases the testing interval to 16 years. This means that they will now test 63 units per year (1000/16). The entity has just two years left to get the test rate corrected. After a year, they again find three failures out of the 63 units tested. 3/63= 4.76% failures.

In response to the >4% failure rate, the entity decreases the testing interval to 14 years. This means that they will now test 72 units per year (1000/14). The entity has just one year left to get the test rate corrected. After a year, they again find three failures out of the 72 units tested. 3/72= 4.2% failures.

(Note that the entity has tried 10 years, and they were under the 4% limit; and they tried 14 years, and they were over the 4% limit. They must be back at 4% failures or less in the next year, so they might simply elect to go back to 10 years.)

Instead, in response to the 4.2% failure rate, the entity decreases the testing interval to 12 years. This means that they will now test 84 units per year (1000/12). After a year, they again find three failures out of the 84 units tested. 3/84= 3.6% failures.

Entity found that they could maintain the failure rate at no more than 4% failures by maintaining the testing interval at 12 years or less. Entity chose 12-year interval, and effectively extended their TBM (10 years) program by 20%.

A note of practicality is that an entity will probably be in better shape to lengthen the intervals between tests if the failure rate is less than 2%. But the requirements allow for annual adjustments if the entity desires. As a matter of maintenance management, an ever-changing test rate (units tested / year) may be un-workable.

Note that the "5% of components" requirement effectively sets a practical limit of 20-year maximum PBM interval. Also of note is the "3 years" requirement; an entity might arbitrarily extend time intervals from six years to 20 years. In the event that an entity finds a failure rate greater than 4%, then the test rate must be accelerated such that within three years the failure rate must be brought back down to 4% or less.

Here is a table that demonstrates the values discussed:

Year #	Total Population (P)	Test Interval (I)	Units to be Tested (U= P/I)	# of Failures Found (F)	Failure Rate (=F/U)	Decision to Change Interval Yes or No	Interval Chosen
1	1000	10 yrs	100	3	3%	Yes	20 yrs
2	1000	20 yrs	50	3	6%	Yes	16yrs
3	1000	16 yrs	63	3	4.8%	Yes	14 yrs
4	1000	14 yrs	72	3	4.2%	Yes	12 yrs
5	1000	12 yrs	84	3	3.6%	No	12 yrs

Please provide an example of the calculations involved in extending maintenance time intervals using PBM for voltage and current sensing devices.

Note that the following example captures "voltage and current inputs to the protective relays" as all of the various current transformer and potential transformer signals associated with a particular set of relays used for protection of a specific Element. This entity calls this set of protective relays a "Relay Scheme." Thus, this entity chooses to count PT and CT signals as a group instead of individually tracking maintenance activities to specific bushing CT's or specific PT's. An entity is not restricted to this method of counting voltage and current devices, signals and paths. Perhaps another method an entity would prefer would be to simply track every individual PT and CT. Note that a generation maintenance group may well select the latter because they may elect to perform routine off-line tests during generator outages, whereas a transmission maintenance group might create a process that utilizes Real-time system values measured at the relays. Under the included definition of "component":

The designation of what constitutes a control circuit component is very dependent upon how an entity performs and tracks the testing of the control circuitry. Some entities test their control circuits on a breaker basis whereas others test their circuitry on a local zone of protection basis. Thus, entities are allowed the latitude to designate their own definitions of control circuit components. Another example of where the entity has some discretion on determining what constitutes a single component is the voltage and current sensing devices, where the entity may choose either to designate a full three-phase set of such devices or a single device as a single component.

And in Attachment A (PBM) the definition of Segment:

Segment – *Protection Systems or components of a consistent design standard, or a particular model or type from a single manufacturer that typically share other common elements. Consistent performance is expected across the entire population of a segment. A segment must contain at least sixty (60) individual components.*

Example:

Entity has 2000 "Relay Schemes," all of which have three current signals supplied from bushing CTs, and three voltage signals supplied from substation bus PT's. All cabling and circuitry was designed and built with a consistent (internal entity) standard, and this population is greater than the minimum sample requirement of 60.

For the sake of further example the following facts are given:

Half of all relay schemes (1,000) are supplied with current signals from ANSI STD C800 bushing CTs and voltage signals from PTs built by ACME Electric MFR CO. All of the relay panels and cable pulls were built with consistent standards, and consistent performance standard expectations exist for the consistent wiring, cabling and instrument transformers within the segment (which is greater than 60).

The other half of the entity's relay schemes have MPC relays with additional monitoring built-in that compare DNP values of voltages and currents (or Watts and VARs), as interpreted by the MPC relays and alarm for an entity-accepted tolerance level of accuracy. This newer segment of their "Voltage and Current Sensing" population is different than the original segment, consistent (standards, construction and performance expectations) within the new segment and constitutes the remainder of the entity's population.

The entity is tracking many thousands of voltage and current signals within 2,000 relay schemes (each consisting of multiple voltage and current signals) in each of these two segments. But half of all of the relay schemes voltage and current signals are monitored; therefore, the voltage and current signals are continuously tested and the circuit will alarm when there is a failure; these alarms have to be verified every 12 years for correct operation.

The entity now has 1,000 relay schemes worth of voltage and current signals remaining that they have elected to count within their relay schemes designation. The entity has instituted a process that requires the verification of these voltage and current signals within each relay scheme (one unit).

(Please note - a problem discovered with a current or voltage signal found at the relay could be caused by anything from the relay, all the way to the signal source itself. Having many sources of problems can easily increase failure rates beyond the rate of failures of just one item (for example just PTs). It is the intent of the SDT to minimize failure rates of all of the equipment to an acceptable level; thus, any failure of any item that gets the signal from source to relay is counted. It is for this reason that the SDT chose to set the boundary at the ability of the signal to be delivered all the way to the relay.

The entity will start out measuring all of the relay scheme voltage and currents at the individual relays within the prescribed Table requirements (12 year max) by measuring the voltage and current values every 10 years. The entity's plan is to test 100 units per year; this is greater than the minimum sample size requirement of 30. For the sake of example only, the following will show three failures per year; reality may well have different numbers of failures every year. PBM requires annual assessment of failures found per units tested. After the first year of tests, the entity finds three failures in the 100 units tested. 3/100= 3% failure rate.

This entity is now allowed to extend the maintenance interval, if they choose. The entity chooses to extend the maintenance interval of this population segment out to 20 years. This represents a rate of 50 units tested per year; entity selects 50 units to be tested in the following year. After that year of testing these 50 units, the entity again finds three failed units. 3/50= 6% failures.

This entity has now exceeded the acceptable failure rate for these devices and must accelerate testing of all of the units at a higher rate, such that the failure rate is found to be less than 4% per year; the entity has three years to get this failure rate down to 4% or less (per year).

In response to the 6% failure rate, the entity decreases the testing interval to 16 years. This means that they will now test 63 units per year (1000/16). The entity has just two years left to get the test rate corrected. After a year, they again find three failures out of the 63 units tested. 3/63= 4.76% failures.

In response to the >4%failure rate, the entity decreases the testing interval to 14 years. This means that they will now test 72 units per year (1000/14). The entity has just one year left to get the test rate corrected. After a year, they again find three failures out of the 72 units tested. 3/72= 4.2% failures.

(Note that the entity has tried 10 years, and they were under the 4% limit; and they tried 14 years, and they were over the 4% limit. They must be back at 4% failures or less in the next year, so they might simply elect to go back to 10 years.)

Instead, in response to the 4.2% failure rate, the entity decreases the testing interval to 12 years. This means that they will now test 84 units per year (1,000/12). After a year, they again find three failures out of the 84 units tested. 3/84= 3.6% failures.

Entity found that they could maintain the failure rate at no more than 4% failures by maintaining the testing interval at 12 years or less. Entity chose 12-year interval and effectively extended their TBM (10 years) program by 20%.

A note of practicality is that an entity will probably be in better shape to lengthen the intervals between tests if the failure rate is less than 2%. But the requirements allow for annual adjustments, if the entity desires. As a matter of maintenance management, an ever-changing test rate (units tested/year) may be un-workable.

Note that the "5% of components" requirement effectively sets a practical limit of 20-year maximum PBM interval. Also of note is the "3 years" requirement; an entity might arbitrarily extend time intervals from six years to 20 years. In the event that an entity finds a failure rate greater than 4%, then the test rate must be accelerated such that within three years the failure rate must be brought back down to 4% or less.

Here is a table that demonstrates the values discussed:

Year #	Total Population (P)	Test Interval (I)	Units to be Tested (U= P/I)	# of Failures Found (F)	Failure Rate (=F/U)	Decision to Change Interval Yes or No	Interval Chose
1	1000	10 yrs	100	3	3%	Yes	20 yrs
2	1000	20 yrs	50	3	6%	Yes	16yrs
3	1000	16 yrs	63	3	4.8%	Yes	14 yrs
4	1000	14 yrs	72	3	4.2%	Yes	12 yrs
5	1000	12 yrs	84	3	3.6%	No	12 yrs

10. Overlapping the Verification of Sections of the Protection System

Tables 1-1 through 1-5 require that every Protection System component be periodically verified. One approach, but not the only method, is to test the entire protection scheme as a unit, from the secondary windings of voltage and current sources to breaker tripping. For practical ongoing verification, sections of the Protection System may be tested or monitored individually. The boundaries of the verified sections must overlap to ensure that there are no gaps in the verification. See Appendix A of this Supplementary Reference for additional discussion on this topic.

All of the methodologies expressed within this report may be combined by an entity, as appropriate, to establish and operate a maintenance program. For example, a Protection System may be divided into multiple overlapping sections with a different maintenance methodology for each section:

- Time-based maintenance with appropriate maximum verification intervals for categories of equipment, as given in the Tables 1-1 through 1-5;
- Monitoring as described in Tables 1-1 through 1-5;
- A Performance-Based Maintenance program as described in Section 9 above, or Attachment A of the standard;
- Opportunistic verification using analysis of Fault records, as described in Section 11

10.1 Frequently Asked Questions:

My system has alarms that are gathered once daily through an auto-polling system; this is not really a conventional SCADA system but does it meet the Table 1 requirements for inclusion as a monitored system?

Yes, provided the auto-polling that gathers the alarms reports those alarms to a location where the action can be initiated to correct the Unresolved Maintenance Issue. This location does not have to be the location of the engineer or the technician that will eventually repair the problem, but rather a location where the action can be initiated.

11. Monitoring by Analysis of Fault Records

Many users of microprocessor relays retrieve Fault event records and oscillographic records by data communications after a Fault. They analyze the data closely if there has been an apparent Misoperation, as NERC standards require. Some advanced users have commissioned automatic Fault record processing systems that gather and archive the data. They search for evidence of component failures or setting problems hidden behind an operation whose overall outcome seems to be correct. The relay data may be augmented with independently captured Digital Fault Recorder (DFR) data retrieved for the same event.

Fault data analysis comprises a legitimate CBM program that is capable of reducing the need for a manual time-interval based check on Protection Systems whose operations are analyzed. Even electromechanical Protection Systems instrumented with DFR channels may achieve some CBM benefit. The completeness of the verification then depends on the number and variety of Faults in the vicinity of the relay that produce relay response records and the specific data captured.

A typical Fault record will verify particular parts of certain Protection Systems in the vicinity of the Fault. For a given Protection System installation, it may or may not be possible to gather within a reasonable amount of time an ensemble of internal and external Fault records that completely verify the Protection System.

For example, Fault records may verify that the particular relays that tripped are able to trip via the control circuit path that was specifically used to clear that Fault. A relay or DFR record may indicate correct operation of the protection communications channel. Furthermore, other nearby Protection Systems may verify that they restrain from tripping for a Fault just outside their respective zones of protection. The ensemble of internal Fault and nearby external Fault event data can verify major portions of the Protection System, and reset the time clock for the Table 1 testing intervals for the verified components only.

What can be shown from the records of one operation is very specific and limited. In a panel with multiple relays, only the specific relay(s) whose operation can be observed without ambiguity should be used. Be careful about using Fault response data to verify that settings or calibration are correct. Unless records have been captured for multiple Faults close to either side of a setting boundary, setting or calibration could still be incorrect.

PMU data, much like DME data, can be utilized to prove various components of the Protection System. Obviously, care must be taken to attribute proof only to the parts of a Protection System that can actually be proven using the PMU or DME data.

If Fault record data is used to show that portions or all of a Protection System have been verified to meet Table 1 requirements, the owner must retain the Fault records used, and the maintenance-related conclusions drawn from this data and used to defer Table 1 tests, for at least the retention time interval given in Section 8.2.

11.1 Frequently Asked Questions:

I use my protective relays for Fault and Disturbance recording, collecting oscillographic records and event records via communications for Fault analysis to meet NERC and DME requirements. What are the maintenance requirements for the relays?

For relays used only as Disturbance Monitoring Equipment, NERC Standard PRC-018-1 R3 & R6 states the maintenance requirements and is being addressed by a standards activity that is revising PRC-002-1 and PRC-018-1. For protective relays "that are designed to provide protection for the BES," this standard applies, even if they also perform DME functions.

12. Importance of Relay Settings in Maintenance Programs

In manual testing programs, many utilities depend on pickup value or zone boundary tests to show that the relays have correct settings and calibration. Microprocessor relays, by contrast, provide the means for continuously monitoring measurement accuracy. Furthermore, the relay digitizes inputs from one set of signals to perform all measurement functions in a single self-monitoring microprocessor system. These relays do not require testing or calibration of each setting.

However, incorrect settings may be a bigger risk with microprocessor relays than with older relays. Some microprocessor relays have hundreds or thousands of settings, many of which are critical to Protection System performance.

Monitoring does not check measuring element settings. Analysis of Fault records may or may not reveal setting problems. To minimize risk of setting errors after commissioning, the user should enforce strict settings data base management, with reconfirmation (manual or automatic) that the installed settings are correct whenever maintenance activity might have changed them; for background and guidance, see [5] in References.

Table 1 requires that settings must be verified to be as specified. The reason for this requirement is simple: With legacy relays (non-microprocessor protective relays), it is necessary to know the value of the intended setting in order to test, adjust and calibrate the relay. Proving that the relay works per specified setting was the de facto procedure. However, with the advanced microprocessor relays, it is possible to change relay settings for the purpose of verifying specific functions and then neglect to return the settings to the specified values. While there is no specific requirement to maintain a settings management process, there remains a need to verify that the settings left in the relay are the intended, specified settings. This need may manifest itself after any of the following:

- One or more settings are changed for any reason.
- A relay fails and is repaired or replaced with another unit.
- A relay is upgraded with a new firmware version.

12.1 Frequently Asked Questions:

How do I approach testing when I have to upgrade firmware of a microprocessor relay?

The entity should ensure that the relay continues to function properly after implementation of firmware changes. Some entities may have a R&D department that might routinely run acceptance tests on devices with firmware upgrades before allowing the upgrade to be installed. Other entities may rely upon the vigorous testing of the firmware OEM. An entity has the latitude to install devices and/or programming that they believe will perform to their satisfaction. If an entity should choose to perform the maintenance activities specified in the Tables following a firmware upgrade, then they may, if they choose, reset the time clock on that set of maintenance activities so that they would not have to repeat the maintenance on its

regularly scheduled cycle. (However, for simplicity in maintenance schedules, some entities may choose to not reset this time clock; it is merely a suggested option.)

If I upgrade my old relays, then do I have to maintain my previous equipment maintenance documentation?

If an equipment item is repaired or replaced, then the entity can restart the maintenance-activity-time-interval-clock, if desired; however, the replacement of equipment does not remove any documentation requirements. The requirements in the standard are intended to ensure that an entity has a maintenance plan, and that the entity adheres to minimum activities and maximum time intervals. The documentation requirements are intended to help an entity demonstrate compliance. For example, saving the dates and records of the last two maintenance activities is intended to demonstrate compliance with the interval. Therefore, if you upgrade or replace equipment, then you still must maintain the documentation for the previous equipment, thus demonstrating compliance with the time interval requirement prior to the replacement action.

We have a number of installations where we have changed our Protection System components. Some of the changes were upgrades, but others were simply system rating changes that merely required taking relays "out-of-service". What are our responsibilities when it comes to "out-of-service" devices?

Assuming that your system up-rates, upgrades and overall changes meet any and all other requirements and standards, then the requirements of PRC-005-2 are simple – if the Protection System component performs a Protection System function, then it must be maintained. If the component no longer performs Protection System functions, then it does not require maintenance activities under the Tables of PRC-005-2. While many entities might physically remove a component that is no longer needed, there is no requirement in PRC-005-2 to remove such component(s). Obviously, prudence would dictate that an "out-of-service" device is truly made inactive. There are no record requirements listed in PRC-005-2 for Protection System components not used.

While performing relay testing of a protective device on our Bulk Electric System, it was discovered that the protective device being tested was either broken or out of calibration. Does this satisfy the relay testing requirement, even though the protective device tested bad, and may be unable to be placed back into service?

Yes, PRC-005-2 requires entities to perform relay testing on protective devices on a given maintenance cycle interval. By performing this testing, the entity has satisfied PRC-005-2 requirement, although the protective device may be unable to be returned to service under normal calibration adjustments. R5 states:

"R5. Each Transmission Owner, Generator Owner, and Distribution Provider shall demonstrate efforts to correct any identified Unresolved Maintenance Issues."

Also, when a failure occurs in a Protection System, power system security may be comprised, and notification of the failure must be conducted in accordance with relevant NERC standards.

If I show the protective device out of service while it is being repaired, then can I add it back as a new protective device when it returns? If not, my relay testing history would show that I was out of compliance for the last maintenance cycle.

The maintenance and testing requirements (R5) state "…shall demonstrate efforts to correct any identified Unresolved Maintenance Issues..." The type of corrective activity is not stated; however, it could include repairs or replacements.

Your documentation requirements will increase, of course, to demonstrate that your device tested bad and had corrective actions initiated. Your regional entity might ask about the status of your corrective actions.

13. Self-Monitoring Capabilities and Limitations

Microprocessor relay proponents have cited the self-monitoring capabilities of these products for nearly 20 years. Theoretically, any element that is monitored does not need a periodic manual test. A problem today is that the community of manufacturers and users has not created clear documentation of exactly what is and is not monitored. Some unmonitored but critical elements are buried in installed systems that are described as self-monitoring.

To utilize the extended time intervals allowed by monitoring, the user must document that the monitoring attributes of the device match the minimum requirements listed in the Table 1.

Until users are able to document how all parts of a system which are required for the protective functions are monitored or verified (with help from manufacturers), they must continue with the unmonitored intervals established in Table 1 and Table 3.

Going forward, manufacturers and users can develop mappings of the monitoring within relays, and monitoring coverage by the relay of user circuits connected to the relay terminals.

To enable the use of the most extensive monitoring (and never again have a hands-on maintenance requirement), the manufacturers of the microprocessor-based self-monitoring components in the Protection System should publish for the user a document or map that shows:

- How all internal elements of the product are monitored for any failure that could impact Protection System performance.
- Which connected circuits are monitored by checks implemented within the product; how to connect and set the product to assure monitoring of these connected circuits; and what circuits or potential problems are not monitored.

This manufacturer's information can be used by the registered entity to document compliance of the monitoring attributes requirements by:

- Presenting or referencing the product manufacturer's documents.
- Explaining in a system design document the mapping of how every component and circuit that is critical to protection is monitored by the microprocessor product(s) or by other design features.
- Extending the monitoring to include the alarm transmission Facilities through which failures are reported within a given time frame to allocate where action can be taken to initiate resolution of the alarm attributed to an Unresolved Maintenance Issue, so that failures of monitoring or alarming systems also lead to alarms and action.
- Documenting the plans for verification of any unmonitored components according to the requirements of Table 1 and Table 3.

13.1 Frequently Asked Questions:

I can't figure out how to demonstrate compliance with the requirements for the highest level of monitoring of Protection Systems. Why does this Maintenance Standard describe a maintenance program approach I cannot achieve?

Demonstrating compliance with the requirements for the highest level of monitoring any particular component of Protection Systems is likely to be very involved, and may include detailed manufacturer documentation of complete internal monitoring within a device, comprehensive design drawing reviews, and other detailed documentation. This standard does not presume to specify what documentation must be developed; only that it must be documented.

There may actually be some equipment available that is capable of meeting these highest levels of monitoring criteria, in which case it may be maintained according to the highest level of monitoring shown on the Tables. However, even if there is no equipment available today that can meet this level of monitoring, the standard establishes the necessary requirements for when such equipment becomes available.

By creating a roadmap for development, this provision makes the standard technology-neutral. The Standard Drafting Team wants to avoid the need to revise the standard in a few years to accommodate technology advances that may be coming to the industry.

14. Notification of Protection System Failures

When a failure occurs in a Protection System, power system security may be compromised, and notification of the failure must be conducted in accordance with relevant NERC standard(s). Knowledge of the failure may impact the system operator's decisions on acceptable Loading conditions.

This formal reporting of the failure and repair status to the system operator by the Protection System owner also encourages the system owner to execute repairs as rapidly as possible. In some cases, a microprocessor relay or carrier set can be replaced in hours; wiring termination failures may be repaired in a similar time frame. On the other hand, a component in an electromechanical or early-generation electronic relay may be difficult to find and may hold up repair for weeks. In some situations, the owner may have to resort to a temporary protection panel, or complete panel replacement.

15. Maintenance Activities

Some specific maintenance activities are a requirement to ensure reliability. An example would be that a BES entity could be prudent in its protective relay maintenance, but if its battery maintenance program is lacking, then reliability could still suffer. The NERC glossary outlines a Protection System as containing specific components. PRC-005-2 requires specific maintenance activities be accomplished within a specific time interval. As noted previously, higher technology equipment can contain integral monitoring capability that actually performs maintenance verification activities routinely and often; therefore, *manual intervention* to perform certain activities on these type components may not be needed.

15.1 Protective Relays (Table 1-1)

These relays are defined as the devices that receive the input signal from the current and voltage sensing devices and are used to isolate a Faulted Element of the BES. Devices that sense thermal, vibration, seismic, pressure, gas, or any other non-electrical inputs are excluded.

Non-microprocessor based equipment is treated differently than microprocessor-based equipment in the following ways; the relays should meet the asset owners' tolerances:

- Non-microprocessor devices must be tested with voltage and/or current applied to the device.
- Microprocessor devices may be tested through the integral testing of the device.
    - There is no specific protective relay commissioning test or relay routine test mandated.
    - There is no specific documentation mandated.

15.1.1 Frequently Asked Questions:

What calibration tolerance should be applied on electromechanical relays?

Each entity establishes their own acceptable tolerances when applying protective relaying on their system. For some Protection System components, adjustment is required to bring measurement accuracy within the parameters established by the asset owner based on the specific application of the component. A calibration failure is the result if testing finds the specified parameters to be out of tolerance.

15.2 Voltage & Current Sensing Devices (Table 1-3)

These are the current and voltage sensing devices, usually known as instrument transformers. There is presently a technology available (fiber-optic Hall-effect) that does not utilize conventional transformer technology; these devices and other technologies that produce quantities that represent the primary values of voltage and current are considered to be a type of voltage and current sensing devices included in this standard.

The intent of the maintenance activity is to verify the input to the protective relay from the device that produces the current or voltage signal sample.

There is no specific test mandated for these components. The important thing about these signals is to know that the expected output from these components actually reaches the

protective relay. Therefore, the proof of the proper operation of these components also demonstrates the integrity of the wiring (or other medium used to convey the signal) from the current and voltage sensing device, all the way to the protective relay. The following observations apply:

- There is no specific ratio test, routine test or commissioning test mandated.
- There is no specific documentation mandated.
- It is required that the signal be present at the relay.
- This expectation can be arrived at from any of a number of means; including, but not limited to, the following: By calculation, by comparison to other circuits, by commissioning tests, by thorough inspection, or by any means needed to verify the circuit meets the asset owner's Protection System maintenance program.
- An example of testing might be a saturation test of a CT with the test values applied at the relay panel; this, therefore, tests the CT, as well as the wiring from the relay all the back to the CT.
- Another possible test is to measure the signal from the voltage and/or current sensing devices, during Load conditions, at the input to the relay.
- Another example of testing the various voltage and/or current sensing devices is to query the microprocessor relay for the Real-time Loading; this can then be compared to other devices to verify the quantities applied to this relay. Since the input devices have supplied the proper values to the protective relay, then the verification activity has been satisfied. Thus, event reports (and oscillographs) can be used to verify that the voltage and current sensing devices are performing satisfactorily.
- Still another method is to measure total watts and vars around the entire bus; this should add up to zero watts and zero vars, thus proving the voltage and/or current sensing devices system throughout the bus.
- Another method for proving the voltage and/or current-sensing devices is to complete commissioning tests on all of the transformers, cabling, fuses and wiring.
- Any other method that verifies the input to the protective relay from the device that produces the current or voltage signal sample.

15.2.1 Frequently Asked Questions:

What is meant by "…verify the current and voltage circuit inputs from the voltage and current sensing devices to the protective relays …" Do we need to perform ratio, polarity and saturation tests every few years?

No. You must verify that the protective relay is receiving the expected values from the voltage and current-sensing devices (typically voltage and current transformers). This can be as difficult as is proposed by the question (with additional testing on the cabling and substation wiring to ensure that the values arrive at the relays); or simplicity can be achieved by other verification methods. While some examples follow, these are not intended to represent an all-inclusive list; technology advances and ingenuity should not be excluded from making comparisons and verifications:

- Compare the secondary values, at the relay, to a metering circuit, fed by different current transformers, monitoring the same line as the questioned relay circuit.
- Compare the individual phase secondary values at the relay panel (with additional testing on the panel wiring to ensure that the values arrive at those relays) with the other phases, and verify that residual currents are within expected bounds.
- Observe all three phase currents and the residual current at the relay panel with an oscilloscope, observing comparable magnitudes and proper phase relationship, with additional testing on the panel wiring to ensure that the values arrive at the relays.
- Compare the values, as determined by the questioned relay (such as, but not limited to, a query to the microprocessor relay) to another protective relay monitoring the same line, with currents supplied by different CTs.
- Compare the secondary values, at the relay with values measured by test instruments (such as, but not limited to multi-meters, voltmeter, clamp-on ammeters, etc.) and verified by calculations and known ratios to be the values expected. For example, a single PT on a 100KV bus will have a specific secondary value that, when multiplied by the PT ratio, arrives at the expected bus value of 100KV.
- Query SCADA for the power flows at the far end of the line protected by the questioned relay, compare those SCADA values to the values as determined by the questioned relay.
- Totalize the Watts and VARs on the bus and compare the totals to the values as seen by the questioned relay.

The point of the verification procedure is to ensure that all of the individual components are functioning properly; and that an ongoing proactive procedure is in place to re-check the various components of the protective relay measuring Systems.

Is wiring insulation or hi-pot testing required by this Maintenance Standard?

No, wiring insulation and equipment hi-pot testing are not specifically required by the Maintenance Standard. However, if the method of verifying CT and PT inputs to the relay involves some other method than actual observation of current and voltage transformer secondary inputs to the relay, it might be necessary to perform some sort of cable integrity test to verify that the instrument transformer secondary signals are actually making it to the relay

and not being shunted off to ground. For instance, you could use CT excitation tests and PT turns ratio tests and compare to baseline values to verify that the instrument transformer outputs are acceptable. However, to conclude that these acceptable transformer instrument output signals are actually making it to the relay inputs, it also would be necessary to verify the insulation of the wiring between the instrument transformer and the relay.

My plant generator and transformer relays are electromechanical and do not have metering functions, as do microprocessor- based relays. In order for me to compare the instrument transformer inputs to these relays to the secondary values of other metered instrument transformers monitoring the same primary voltage and current signals, it would be necessary to temporarily connect test equipment, like voltmeters and clamp on ammeters, to measure the input signals to the relays. This practice seems very risky, and a plant trip could result if the technician were to make an error while measuring these current and voltage signals. How can I avoid this risk? Also, what if no other instrument transformers are available which monitor the same primary voltage or current signal?

Comparing the input signals to the relays to the outputs of other independent instrument transformers monitoring the same primary current or voltage is just one method of verifying the instrument transformer inputs to the relays, but is not required by the standard. Plants can choose how to best manage their risk. If online testing is deemed too risky, offline tests, such as, but not limited to, CT excitation test and PT turns ratio tests can be compared to baseline data and be used in conjunction with CT and PT secondary wiring insulation verification tests to adequately "verify the current and voltage circuit inputs from the voltage and current sensing devices to the protective relays …" while eliminating the risk of tripping an in service generator or transformer. Similarly, this same offline test methodology can be used to verify the relay input voltage and current signals to relays when there are no other instrument transformers monitoring available for purposes of signal comparison.

15.3 Control circuitry associated with protective functions (Table 1-5)

This component of Protection Systems includes the trip coil(s) of the circuit breaker, circuit switcher or any other interrupting device. It includes the wiring from the batteries to the relays. It includes the wiring (or other signal conveyance) from every trip output to every trip coil. It includes any device needed for the correct processing of the needed trip signal to the trip coil of the interrupting device; this requirement is meant to capture inputs and outputs to and from a protective relay that are necessary for the correct operation of the protective functions. In short, every trip path must be verified; the method of verification is optional to the asset owner. An example of testing methods to accomplish this might be to verify, with a volt-meter, the existence of the proper voltage at the open contacts, the open circuited input circuit and at the trip coil(s). As every parallel trip path has similar failure modes, each trip path from relay to trip coil must be verified. Each trip coil must be tested to trip the circuit breaker (or other interrupting device) at least once. There is a requirement to operate the circuit breaker (or other interrupting device) at least once every six years as part of the complete functional test. If a suitable monitoring system is installed that verifies every parallel trip path, then the manual-intervention testing of those parallel trip paths can be eliminated; however, the actual operation of the circuit breaker must still occur at least once every six years. This six-year tripping requirement can be completed as easily as tracking the Real-time Fault-clearing operations on the circuit breaker, or tracking the trip coil(s) operation(s) during circuit breaker routine maintenance actions.

The circuit-interrupting device should not be confused with a motor-operated disconnect. The intent of this standard is to require maintenance intervals and activities on Protection Systems equipment, and not just all system isolating equipment.

It is necessary, however, to classify a device that actuates a high-speed auto-closing ground switch as an interrupting device, if this ground switch is utilized in a Protection System and forces a ground Fault to occur that then results in an expected Protection System operation to clear the forced ground Fault. The SDT believes that this is essentially a transferred-tripping device without the use of communications equipment. If this high-speed ground switch is "…designed to provide protection for the BES…" then this device needs to be treated as any other Protection System component. The control circuitry would have to be tested within 12 years, and any electromechanically operated device will have to be tested every six years. If the spring-operated ground switch can be disconnected from the solenoid triggering unit, then the solenoid triggering unit can easily be tested without the actual closing of the ground blade.

The dc control circuitry also includes each auxiliary tripping relay (94) and each lock-out relay (86) that may exist in any particular trip scheme. If the lock-out relays (86) are electromechanical type components, then they must be trip tested. The PSMT SDT considers these components to share some similarities in failure modes as electromechanical protective relays; as such, there is a six-year maximum interval between mandated maintenance tasks unless PBM is applied.

Contacts of the 86 and/or 94 that pass the trip current on to the circuit interrupting device trip coils will have to be checked as part of the 12 year requirement. Contacts of the 86 and/or 94 lock relay that operate non-BES interrupting devices are not required. Normally-open contacts that are not used to pass a trip signal and normally-closed contacts do not have to be verified. Verification of the tripping paths is the requirement.

While relays that do not respond to electrical quantities are presently excluded from this standard, their control circuits are included if the relay is installed to detect Faults on BES Elements. Thus, the control circuit of a BES transformer sudden pressure relay should be verified every 12 years, assuming its integrity is not monitored. While a sudden pressure relay control circuit is included within the scope of PRC-005-2, other alarming relay control circuits, (i.e., SF-6 low gas) are not included, even though they may trip the breaker being monitored.

New technology is also accommodated here; there are some tripping systems that have replaced the traditional hard-wired trip circuitry with other methods of trip-signal conveyance such as fiber-optics. It is the intent of the PSMT SDT to include this, and any other, technology that is used to convey a trip signal from a protective relay to a circuit breaker (or other interrupting device) within this category of equipment. The requirement for these systems is verification of the tripping path.

Monitoring of the control circuit integrity allows for no maintenance activity on the control circuit (excluding the requirement to operate trip coils and electromechanical lockout and/or tripping auxiliary relays). Monitoring of integrity means to monitor for continuity and/or presence of voltage on each trip path. For Ethernet or fiber-optic control systems, monitoring of integrity means to monitor communication ability between the relay and the circuit breaker.

The trip path from a sudden pressure device is a part of the Protection System control circuitry. The sensing element is omitted from PRC-005-2 testing requirements because the SDT is unaware of industry-recognized testing protocol for the sensing elements. The SDT believes

that Protection Systems that trip (or can trip) the BES should be included. This position is consistent with the currently-approved PRC-005-1, consistent with the SAR for Project 2007-17, and understands this to be consistent with the position of FERC staff.

15.3.1 Frequently Asked Questions:

Is it permissible to verify circuit breaker tripping at a different time (and interval) than when we verify the protective relays and the instrument transformers?

Yes, provided the entire Protective System is tested within the individual component's maximum allowable testing intervals.

The Protection System Maintenance Standard describes requirements for verifying the tripping of circuit breakers. What is this telling me about maintenance of circuit breakers?

Requirements in PRC-005-2 are intended to verify the integrity of tripping circuits, including the breaker trip coil, as well as the presence of auxiliary supply (usually a battery) for energizing the trip coil if a protection function operates. Beyond this, PRC-005-2 sets no requirements for verifying circuit breaker performance, or for maintenance of the circuit breaker.

How do I test each dc Control Circuit trip path, as established in Table 1-5 "Protection System Control Circuitry (Trip coils and auxiliary relays)"?

Table 1-5 specifies that each breaker trip coil and lockout relays that carry trip current to a trip coil must be operated within the specified time period. The required operations may be via targeted maintenance activities, or by documented operation of these devices for other purposes such as Fault clearing.

Are high-speed ground switch trip coils included in the dc control circuitry?

Yes. PRC-005-2 includes high-speed grounding switch trip coils within the dc control circuitry to the degree that the initiating Protection Systems are characterized as "transmission Protection Systems."

Does the control circuitry and trip coil of a non-BES breaker, tripped via a BES protection component, have to be tested per Table 1.5? (Refer to Table 3 for examples 1 and 2)Example 1: A non-BES circuit breaker that is tripped via a Protection System to which PRC-005-2 applies might be (but is not limited to) a 12.5KV circuit breaker feeding (non-black-start) radial Loads but has a trip that originates from an under-frequency (81) relay.

- The relay must be verified.
- The voltage signal to the relay must be verified.
- All of the relevant dc supply tests still apply.
- .
- The unmonitored trip circuit between the relay and any lock-out or auxiliary relay must be verified every 12 years.
- The unmonitored trip circuit between the lock-out (or auxiliary relay) and the non-BES breaker does not have to be proven with an electrical trip.
- In the case where there is no lock-out or auxiliary tripping relay used, the trip circuit to the non-BES breaker does not have to be proven with an electrical trip.

- The trip coil of the non-BES circuit breaker does not have to be individually proven with an electrical trip.

Example 2: A Transmission Owner may have a non-BES breaker that is tripped via a Protection System to which PRC-005-2 applies, which may be (but is not limted to) a 13.8 KV circuit breaker feeding (non-black-start) radial Loads but has a trip that originates from a BES 115KV line relay.

- The relay must be verified
- The voltage signal to the relay must be verified
- All of the relevant dc supply tests still apply
-
- The unmonitored trip circuit between the relay and any lock-out (86) or auxiliary (94) relay must be verified every 12 years
- The unmonitored trip circuit between the lock-out (86) (or auxiliary (94)) relay and the non-BES breaker does not have to be proven with an electrical trip
- In the case where there is no lockout (86) or auxiliary (94) tripping relay used, the trip circuit to the non-BES breaker does not have to be proven with an electrical trip.
- The trip coil of the non-BES circuit breaker does not have to be individually proven with an electrical trip

Example 3: A Generator Owner may have an non-BES circuit breaker that is tripped via a Protection System to which PRC-005-2 applies, such as the generator field breaker and low-side breakers on station service/excitation transformers connected to the generator bus.

Trip testing of the generator field breaker and low side station service/excitation transformer breaker(s) via lockout or auxiliairy tripping relays are not required since these breakers may be associated with radially fed loads and are not considered to be BES breakers. An example of an otherwise non-BES circuit breaker that is tripped via a BES protection component might be (but is not limited to) a 6.9kV station service transformer source circuit breaker but has a trip that originates from a generator differential (87) relay.

- The differential relay must be verified.
- The current signals to the relay must be verified.
- All of the relevant dc supply tests still apply.
- The unmonitored trip circuit between the relay and any lock-out or auxiliary relay must be verified every 12 years.
- The unmonitored trip circuit between the lock-out (or auxiliary relay) and the non-BES breaker does not have to be proven with an electrical trip.
- In the case where there is no lock-out or auxiliary tripping relay used, the trip circuit to the non-BES breaker does not have to be proven with an electrical trip.
- The trip coil of the non-BES circuit breaker does not have to be individually proven with an electrical trip.

However, it is very prudent to verify the tripping of such breakers for the integrity of the overall generation plant.

Do I have to verify operation of breaker "a" contacts or any other normally closed auxiliary contacts in the trip path of each breaker as part of my control circuit test?

Operation of normally-closed contacts does not have to be verified. Verification of the tripping paths is the requirement. The continuity of the normally closed contacts will be verified when the tripping path is verified.

15.4 Batteries and DC Supplies (Table 1-4)

The NERC definition of a Protection System is:

- Protective relays which respond to electrical quantities,
- Communications Systems necessary for correct operation of protective functions,
- Voltage and current sensing devices providing inputs to protective relays,
- Station dc supply associated with protective functions (including station batteries, battery chargers, and non-battery-based dc supply), and
- Control circuitry associated with protective functions through the trip coil(s) of the circuit breakers or other interrupting devices.

The station battery is not the only component that provides dc power to a Protection System. In the new definition for Protection System, "station batteries" are replaced with "station dc supply" to make the battery charger and dc producing stored energy devices (that are not a battery) part of the Protection System that must be maintained.

The PSMT SDT recognizes that there are several technological advances in equipment and testing procedures that allow the owner to choose how to verify that a battery string is free of open circuits. The term "continuity" was introduced into the standard to allow the owner to choose how to verify continuity of a battery set by various methods, and not to limit the owner to other conventional methods of showing continuity. Continuity, as used in Table 1-4 of the standard, refers to verifying that there is a continuous current path from the positive terminal of the station battery set to the negative terminal. Without verifying continuity of a station battery, there is no way to determine that the station battery is available to supply dc power to the station. An open battery string will be an unavailable power source in the event of loss of the battery charger.

Batteries cannot be a unique population segment of a Performance-Based Maintenance Program (PBM) because there are too many variables in the electrochemical process to completely isolate all of the performance-changing criteria necessary for using PBM on battery Systems. However, nothing precludes the use of a PBM process for any other part of a dc supply besides the batteries themselves.

15.4.1 Frequently Asked Questions:

What constitutes the station dc supply, as mentioned in the definition of Protective System?

The previous definition of Protection System includes batteries, but leaves out chargers. The latest definition includes chargers, as well as dc systems that do not utilize batteries. This revision of PRC-005-2 is intended to capture these devices that were not included under the previous definition. The station direct current (dc) supply normally consists of two components: the battery charger and the station battery itself. There are also emerging

technologies that provide a source of dc supply that does not include either a battery or charger.

Battery Charger - The battery charger is supplied by an available ac source. At a minimum, the battery charger must be sized to charge the battery (after discharge) and supply the constant dc load. In many cases, it may be sized also to provide sufficient dc current to handle the higher energy requirements of tripping breakers and switches when actuated by the protective relays in the Protection System.

Station Battery - Station batteries provide the dc power required for tripping and for supplying normal dc power to the station in the event of loss of the battery charger. There are several technologies of battery that require unique forms of maintenance as established in Table 1-4.

Emerging Technologies - Station dc supplies are currently being developed that use other energy storage technologies besides the station battery to prevent loss of the station dc supply when ac power is lost. Maintenance of these station dc supplies will require different kinds of tests and inspections. Table 1-4 presents maintenance activities and maximum allowable testing intervals for these new station dc supply technologies. However, because these technologies are relatively new, the maintenance activities for these station dc supplies may change over time.

What did the PSMT SDT mean by "continuity" of the dc supply?

The PSMT SDT recognizes that there are several technological advances in equipment and testing procedures that allow the owner to choose how to verify that a battery string is free of open circuits. The term "continuity" was introduced into the standard to allow the owner to choose how to verify continuity (no open circuits) of a battery set by various methods, and not to limit the owner to other conventional methods of showing continuity – lack of an open circuit. Continuity, as used in Table 1-4 of the standard, refers to verifying that there is a continuous current path from the positive terminal of the station battery set to the negative terminal (no open circuit). Without verifying continuity of a station battery, there is no way to determine that the station battery is available to supply dc power to the station. Whether it is caused from an open cell or a bad external connection, an open battery string will be an unavailable power source in the event of loss of the battery charger.

The current path through a station battery from its positive to its negative connection to the dc control circuits is composed of two types of elements. These path elements are the electrochemical path through each of its cells and all of the internal and external metallic connections and terminations of the batteries in the battery set. If there is loss of continuity (an open circuit) in any part of the electrochemical or metallic path, the battery set will not be available for service. In the event of the loss of the ac source or battery charger, the battery must be capable of supplying dc current, both for continuous dc loads and for tripping breakers and switches. Without continuity, the battery cannot perform this function.
At generating stations and large transmission stations where battery chargers are capable of handling the maximum current required by the Protection System, there are still problems that could potentially occur when the continuity through the connected battery is interrupted.

- Many battery chargers produce harmonics which can cause failure of dc power supplies in microprocessor-based protective relays and other electronic devices connected to station dc supply. In these cases, the substation battery serves as a filter for these

harmonics. With the loss of continuity in the battery, the filter provided by the battery is no longer present.

- Loss of electrical continuity of the station battery will cause, in most battery chargers, regardless of the battery charger's output current capability, a delayed response in full output current from the charger. Almost all chargers have an intentional one- to two-second delay to switch from a low substation dc load current to the maximum output of the charger. This delay would cause the opening of circuit breakers to be delayed, which could violate system performance standards.

Monitoring of the station dc supply voltage will not indicate that there is a problem with the dc current path through the battery, unless the battery charger is taken out of service. At that time, a break in the continuity of the station battery current path will be revealed because there will be no voltage on the station dc circuitry. This particular test method, while proving battery continuity, may not be acceptable to all installations.

Although the standard prescribes what must be accomplished during the maintenance activity, it does not prescribe how the maintenance activity should be accomplished. There are several methods that can be used to verify the electrical continuity of the battery. These are not the only possible methods, simply a sampling of some methods:

- One method is to measure that there is current flowing through the battery itself by a simple clamp on milliamp-range ammeter. A battery is always either charging or discharging. Even when a battery is charged, there is still a measurable float charge current that can be detected to verify that there is continuity in the electrical path through the battery.
- A simple test for continuity is to remove the battery charger from service and verify that the battery provides voltage and current to the dc system. However, the behavior of the various dc-supplied equipment in the station should be considered before using this approach.
- Manufacturers of microprocessor-controlled battery chargers have developed methods for their equipment to periodically (or continuously) test for battery continuity. For example, one manufacturer periodically reduces the float voltage on the battery until current from the battery to the dc load can be measured to confirm continuity.
- Applying test current (as in some ohmic testing devices, or devices for locating dc grounds) will provide a current that when measured elsewhere in the string, will prove that the circuit is continuous.
- Internal ohmic measurements of the cells and units of lead-acid batteries (VRLA & VLA) can detect lack of continuity within the cells of a battery string; and when used in conjunction with resistance measurements of the battery's external connections, can prove continuity. Also some methods of taking internal ohmic measurements, by their very nature, can prove the continuity of a battery string without having to use the results of resistance measurements of the external connections.
- Specific gravity tests could infer continuity because without continuity there could be no charging occurring; and if there is no charging, then specific gravity will go down below acceptable levels over time.

No matter how the electrical continuity of a battery set is verified, it is a necessary maintenance activity that must be performed at the intervals prescribed by Table 1-4 to insure that the station dc supply has a path that can provide the required current to the Protection System at all times.

When should I check the station batteries to see if they have sufficient energy to perform as manufactured?

The answer to this question depends on the type of battery (valve-regulated lead-acid, vented lead-acid, or nickel-cadmium) and the maintenance activity chosen.

For example, if you have a valve-regulated lead-acid (VRLA) station battery, and you have chosen to evaluate the measured cell/unit internal ohmic values to the battery cell's baseline, you will have to perform verification at a maximum maintenance interval of no greater than every six months. While this interval might seem to be quite short, keep in mind that the six-month interval is important for VRLA batteries; this interval provides an accumulation of data that better shows when a VRLA battery is incapable of performing as manufactured.

If, for a VRLA station battery, you choose to conduct a performance capacity test on the entire station battery as the maintenance activity, then you will have to perform verification at a maximum maintenance interval of no greater than every three calendar years.

How is a baseline established for cell/unit internal ohmic measurements?

Establishment of cell/unit internal ohmic baseline measurements should be completed when lead-acid batteries are newly installed. To ensure that the baseline ohmic cell/unit values are most indicative of the station battery's ability to perform as manufactured, they should be made at some point in time after the installation to allow the cell chemistry to stabilize after the initial freshening charge. An accepted industry practice for establishing baseline values is after six-months of installation, with the battery fully charged and in service. However, it is recommended that each owner, when establishing a baseline, should consult the battery manufacturer for specific instructions on establishing an ohmic baseline for their product, if available.

When internal ohmic measurements are taken, the same make/model test equipment should be used to establish the baseline and used for the future trending of the cells internal ohmic measurements because of variances in test equipment and the type of ohmic measurement used by different manufacturer's equipment. Keep in mind that one manufacturer's "Conductance" test equipment does not produce similar results as another manufacturer's "Conductance" test equipment, even though both manufacturers have produced "Ohmic" test equipment. Therefore, for meaningful results to an established baseline, the same make/modelof instrument should be used.

For all new installations of valve-regulated lead-acid (VRLA) batteries and vented lead-acid (VLA) batteries, where trending of the cells internal ohmic measurements to a baseline are to be used to determine the ability of the station battery to perform as manufactured, the establishment of the baseline, as described above, should be followed at the time of installation to insure the most accurate trending of the cell/unit. However, often for older VRLA batteries, the owners of the station batteries have not established a baseline at installation. Also for owners of VLA batteries who want to establish a maintenance activity which requires trending of measured ohmic values to a baseline, there was typically no baseline established at installation of the station battery to trend to.

To resolve the problem of the unavailability of baseline internal ohmic measurements for the individual cell/unit of a station battery, many manufacturers of internal ohmic measurement devices have established libraries of baseline values for VRLA and VLA batteries using their testing device. Also, several of the battery manufacturers have libraries of baselines for their products that can be used to trend to. However, it is important that when using battery manufacturer-supplied data that it is verified that the baseline readings to be used were taken with the same ohmic testing device that will be used for future measurements (for example "Conductance Readings" from one manufacturer's test equipment do not correlate to "Impedance Readings" from a different manufacturer's test equipment). Although many manufacturers may have provided baseline values, which will allow trending of the internal ohmic measurements over the remaining life of a station battery, these baselines are not the actual cell/unit measurements for the battery being trended. It is important to have a baseline tailored to the station battery to more accurately use the tool of ohmic measurement trending. That more customized baseline can only be created by following the establishment of a baseline for each cell/unit at the time of installation of the station battery.

Why determine the State of Charge?

Even though there is no present requirement to check the state of charge of a battery, it can be a very useful tool in determining the overall condition of a battery system. The following discussions are offered as a general reference.

When a battery is fully charged, the battery is available to deliver its existing capacity. As a battery is discharged, its ability to deliver its maximum available capacity is diminished. It is necessary to determine if the state of charge has dropped to an unacceptable level.

What is State of Charge and how can it be determined in a station battery?

The state of charge of a battery refers to the ratio of residual capacity at a given instant to the maximum capacity available from the battery. When a battery is fully charged, the battery is available to deliver its existing capacity. As a battery is discharged, its ability to deliver its maximum available capacity is diminished. Knowing the amount of energy left in a battery compared with the energy it had when it was fully charged gives the user an indication of how much longer a battery will continue to perform before it needs recharging.

For vented lead-acid (VLA) batteries which use accessible liquid electrolyte, a hydrometer can be used to test the specific gravity of each cell as a measure of its state of charge. The hydrometer depends on measuring changes in the weight of the active chemicals. As the battery discharges, the active electrolyte, sulfuric acid, is consumed and the concentration of the sulfuric acid in water is reduced. This, in turn, reduces the specific gravity of the solution in direct proportion to the state of charge. The actual specific gravity of the electrolyte can, therefore, be used as an indication of the state of charge of the battery. Hydrometer readings may not tell the whole story, as it takes a while for the acid to get mixed up in the cells of a VLA battery. If measured right after charging, you might see high specific gravity readings at the top of the cell, even though it is much less at the bottom. Conversely, if taken shortly after adding water to the cell, the specific gravity readings near the top of the cell will be lower than those at the bottom.

Nickel-cadmium batteries, where the specific gravity of the electrolyte does not change during battery charge and discharge, and valve-regulated lead-acid (VRLA) batteries, where the electrolyte is not accessible, cannot have their state of charge determined by specific gravity

readings. For these two types of batteries, and for VLA batteries also, where another method besides taking hydrometer readings is desired, the state of charge may be determined by taking voltage and current readings at the battery terminals. The methods employed to obtain accurate readings vary for the different battery types. Manufacturers' information and IEEE guidelines can be consulted for specifics; (see IEEE 1106 Annex B for Nickel Cadmium batteries, IEEE 1188 Annex A for VRLA batteries and IEEE 450 for VLA batteries.

Why determine the Connection Resistance?

High connection resistance can cause abnormal voltage drop or excessive heating during discharge of a station battery. During periods of a high rate of discharge of the station battery, a very high resistance can cause severe damage. The maintenance requirement to verify battery terminal connection resistance in Table 1-4 is established to verify that the integrity of all battery electrical connections is acceptable. This verification includes cell-to-cell (intercell) and external circuit terminations. Your method of checking for acceptable values of intercell and terminal connection resistance could be by individual readings, or a combination of the two. There are test methods presently that can read post termination resistances and resistance values between external posts. There are also test methods presently available that take a combination reading of the post termination connection resistance plus the intercell resistance value plus the post termination connection resistance value. Either of the two methods, or any other method, that can show if the adequacy of connections at the battery posts is acceptable.

Adequacy of the electrical terminations can be determined by comparing resistance measurements for all connections taken at the time of station battery's installation to the same resistance measurements taken at the maintenance interval chosen, not to exceed the maximum maintenance interval of Table 1-4. Trending of the interval measurements to the baseline measurements will identify any degradation in the battery connections. When the connection resistance values exceed the acceptance criteria for the connection, the connection is typically disassembled, cleaned, reassembled and measurements taken to verify that the measurements are adequate when compared to the baseline readings.

What conditions should be inspected for visible battery cells?

The maintenance requirement to inspect the cell condition of all station battery cells where the cells are visible is a maintenance requirement of Table 1-4. Station batteries are different from any other component in the Protection Station because they are a perishable product due to the electrochemical process which is used to produce dc electrical current and voltage. This inspection is a detailed visual inspection of the cells for abnormalities that occur in the aging process of the cell. In VLA battery visual inspections, some of the things that the inspector is typically looking for on the plates are signs of sulfation of the plates, abnormal colors (which are an indicator of sulfation or possible copper contamination) and abnormal conditions such as cracked grids. The visual inspection could look for symptoms of hydration that would indicate that the battery has been left in a completely discharged state for a prolonged period. Besides looking at the plates for signs of aging, all internal connections, such as the bus bar connection to each plate, and the connections to all posts of the battery need to be visually inspected for abnormalities. In a complete visual inspection for the condition of the cell the cell plates, separators and sediment space of each cell must be looked at for signs of deterioration. An inspection of the station battery's cell condition also includes looking at all terminal posts and cell-to-cell electric connections to ensure they are corrosion free. The case of the battery

containing the cell, or cells, must be inspected for cracks and electrolyte leaks through cracks and the post seals.

This maintenance activity cannot be extended beyond the maximum maintenance interval of Table 1-4 by a Performance-Based Maintenance Program (PBM) because of the electrochemical aging process of the station battery, nor can there be any monitoring associated with it because there must be a visual inspection involved in the activity. A remote visual inspection could possibly be done, but its interval must be no greater than the maximum maintenance interval of Table 1-4.

Why is it necessary to verify the battery string can perform as manufactured? I only care that the battery can trip the breaker, which means that the battery can perform as designed. I oversize my batteries so that even if the battery cannot perform as manufactured, it can still trip my breakers.

The fundamental answer to this question revolves around the concept of battery performance "as designed" vs. battery performance "as manufactured." The purpose of the various sections of Table 1-4 of this standard is to establish requirements for the Protection System owner to maintain the batteries, to ensure they will operate the equipment when there is an incident that requires dc power, and ensure the batteries will continue to provide adequate service until at least the next maintenance interval. To meet these goals, the correct battery has to be properly selected to meet the design parameters, and the battery has to deliver the power it was manufactured to provide.

When testing batteries, it may be difficult to determine the original design (i.e., load profile) of the dc system. This standard is not intended as a design document, and requirements relating to design are, therefore, not included.

Where the dc load profile is known, the best way to determine if the system will operate as designed is to conduct a service test on the battery. However, a service test alone might not fully determine if the battery is healthy. A battery with 50% capacity may be able to pass a service test, but the battery would be in a serious state of deterioration and could fail at some point in the near future.

To ensure that the battery will meet the required load profile and continue to meet the load profile until the next maintenance interval, the installed battery must be sized correctly (i.e., a correct design), and it must be in a good state of health. Since the design of the dc system is not within the scope of the standard, the only consistent and reliable method to ensure that the battery is in a good state of health is to confirm that it can perform as manufactured. If the battery can perform as manufactured and it has been designed properly, the system should operate properly until the next maintenance interval.

How do I verify the battery string can perform as manufactured?

Optimally, actual battery performance should be verified against the manufacturer's rating curves. The best practice for evaluating battery performance is via a performance test. However, due to both logistical and system reliability concerns, some Protection System owners prefer other methods to determine if a battery can perform as manufactured. There are several battery parameters that can be evaluated to determine if a battery can perform as manufactured. Ohmic measurements and float current are two examples of parameters that have been reported to assist in determining if a battery string can perform as manufactured.

The evaluation of battery parameters in determining battery health is a complex issue, and is not an exact science. This standard gives the user an opportunity to utilize other measured parameters to determine if the battery can perform as manufactured. It is the responsibility of the Protection System owner, however, to maintain a documented process that demonstrates the chosen parameter(s) and associated methodology used to determine if the battery string can perform as manufactured.

Whatever parameters are used to evaluate the battery (ohmic measurements, float current, float voltages, temperature, specific gravity, performance test, or combination thereof), the goal is to determine the value of the measurement (or the percentage change) at which the battery fails to perform as manufactured, or the point where the battery is deteriorating so rapidly that it will not perform as manufactured before the next maintenance interval.

This necessitates the need for establishing and documenting a baseline. A baseline may be required of every individual cell, a particular battery installation, or a specific make, model, or size of a cell. Given a consistent cell manufacturing process, it may be possible to establish a baseline number for the cell (make/model/type) and, therefore, a subsequent baseline for every installation would not be necessary. However, future installations of the same battery types should be spot-checked to ensure that your baseline remains applicable.

Consistent testing methods by trained personnel are essential. Moreover, it is essential that these technicians utilize the same make/model of ohmic test equipment each time readings are taken in order to establish a meaningful and accurate trendline against the established baseline. The type of probe and its location (post, connector, etc) for the reading need to be the same for each subsequent test. The room temperature should be recorded with the readings for each test as well. Care should be taken to consider any factors that might lead a trending program to become invalid.

Float current along with other measureable parameters can be used in lieu of or in concert with ohmic measurement testing to measure the ability of a battery to perform as manufactured. The key to using any of these measurement parameters is to establish a baseline and the point where the reading indicates that the battery will not perform as manufactured.

The establishment of a baseline may be different for various types of cells and for different types of installations. In some cases, it may be possible to obtain a baseline number from the battery manufacturer, although it is much more likely that the baseline will have to be established after the installation is complete. To some degree, the battery may still be "forming" after installation; consequently, determining a stable baseline may not be possible until several months after the battery has been in service.

The most important part of this process is to determine the point where the ohmic reading (or other measured parameter(s)) indicates that the battery cannot perform as manufactured. That point could be an absolute number, an absolute change, or a percentage change of an established baseline.

Since there are no universally-accepted repositories of this information, the Protection System owner will have to determine the value/percentage where the battery cannot perform as manufactured (heretofore referred to as a failed cell). This is the most difficult and important part of the entire process.

To determine the point where the battery fails to perform as manufactured, it is helpful to have a history of a battery type, if the data includes the parameter(s) used to evaluate the battery's ability to perform as manufactured against the actual demonstrated performance/capacity of a battery/cell.

For example, when an ohmic reading has been recorded that the user suspects is indicating a failed cell, a performance test of that cell (or string) should be conducted in order to prove/quantify that the cell has failed. Through this process, the user needs to determine the ohmic value at which the performance of the cell has dropped below 80% of the manufactured, rated performance. It is likely that there may be a variation in ohmic readings that indicates a failed cell (possibly significant). It is prudent to use the most conservative values to determine the point at which the cell should be marked for replacement. Periodically, the user should demonstrate that an “adequate” ohmic reading equates to an adequate battery performance (>80% of capacity).

Similarly, acceptance criteria for "good" and "failed" cells should be established for other parameters such as float current, specific gravity, etc., if used to determine the ability of a battery to function as designed.

What happens if I change the make/model of ohmic test equipment after the battery has been installed for a period of time?

If a user decides to switch testers, either voluntarily or because the equipment is not supported/sold any longer, the user may have to establish a new base line and new parameters that indicate when the battery no longer performs as manufactured. The user always has a choice to perform a capacity test in lieu of establishing new parameters.

What are some of the differences between lead-acid and nickel-cadmium batteries?

There is a marked difference in the aging process of lead acid and nickel-cadmium station batteries. The difference in the aging process of these two types of batteries is chiefly due to the electrochemical process of the battery type. Aging and eventual failure of lead acid batteries is due to expansion and corrosion of the positive grid structure, loss of positive plate active material, and loss of capacity caused by physical changes in the active material of the positive plates. In contrast, the primary failure of nickel-cadmium batteries is due to the gradual linear aging of the active materials in the plates. The electrolyte of a nickel-cadmium battery only facilitates the chemical reaction (it functions only to transfer ions between the positive and negative plates), but is not chemically altered during the process like the electrolyte of a lead acid battery. A lead acid battery experiences continued corrosion of the positive plate and grid structure throughout its operational life while a nickel-cadmium battery does not.

Changes to the properties of a lead acid battery when periodically measured and trended to a baseline, can indicate aging of the grid structure, positive plate deterioration, or changes in the active materials in the plate.

Because of the clear differences in the aging process of lead acid and nickel-cadmium batteries, there are no significantly measurable properties of the nickel-cadmium battery that can be measured at a periodic interval and trended to determine aging. For this reason, Table 1-4(c) (Protection System Station dc supply Using nickel-cadmium [NiCad] Batteries) only specifies one

minimum maintenance activity and associated maximum maintenance interval necessary to verify that the station battery can perform as manufactured by evaluating cell/unit measurements indicative of battery performance against the station battery baseline. This maintenance activity is to conduct a performance or modified performance capacity test of the entire battery bank.

Why in Table 1-4 of PRC-005-2 is there a maintenance activity to inspect the structural intergrity of the battery rack?

The purpose of this inspection is to verify that the battery rack is correctly installed and has no deterioration that could weaken its structural integrity.
Because the battery rack is specifically manufactured for the battery that is mounted on it, weakening of its structural members by rust or corrosion can physically jeopardize the battery.

What is required to comply with the "Unintentional dc Grounds" requirement?

In most cases, the first ground that appears on a battery is not a problem. It is the unintentional ground that appears on the opposite pole that becomes problematic. Even then many systems are designed to operate favorably under some unintentional DC ground situations. It is up to the owner of the Protection System to determine if corrective actions are needed on detected unintentional DC grounds. The standard merely requires that a check be made for the existence of Unintentional DC Grounds. Obviously, a "check-off" of some sort will have to be devised by the inspecting entity to document that a check is routinely done for Unintentional DC Grounds because of the possible consequences to the Protection System.

Where the standard refers to "all cells," is it sufficient to have a documentation method that refers to "all cells," or do we need to have separate documentation for every cell? For example, do I need 60 individual documented check-offs for good electrolyte level, or would a single check-off per bank be sufficient?

A single check-off per battery bank is sufficient for documentation, as long as the single check-off attests to checking all cells/units.

Does this standard refer to Station batteries or all batteries; for example, Communications Site Batteries?

This standard refers to Station Batteries. The drafting team does not believe that the scope of this standard refers to communications sites. The batteries covered under PRC-005-2 are the batteries that supply the trip current to the trip coils of the interrupting devices that are a part of the Protection System. The SDT believes that a loss of power to the communications systems at a remote site would cause the communications systems associated with protective relays to alarm at the substation. At this point, the corrective actions can be initiated.

What are cell/unit internal ohmic measurements?

With the introduction of Valve-Regulated Lead-Acid (VRLA) batteries to station dc supplies in the 1980's several of the standard maintenance tools that are used on Vented Lead-Acid (VLA) batteries were unable to be used on this new type of lead-acid battery to determine its state of health. The only tools that were available to give indication of the health of these new VRLA batteries were voltage readings of the total battery voltage, the voltage of the individual cells and periodic discharge tests.

In the search for a tool for determining the health of a VRLA battery several manufacturers studied the electrical model of a lead acid battery's current path through its cell. The overall battery current path consists of resistance and inductive and capacitive reactance. The

inductive reactance in the current path through the battery is so minuscule when compared to the huge capacitive reactance of the cells that it is often ignored in most circuit models of the battery cell. Taking the basic model of a battery cell manufacturers of battery test equipment have developed and marketed testing devices to take measurements of the current path to detect degradation in the internal path through the cell.

In the battery industry, these various types of measurements are referred to as ohmic measurements. Terms used by the industry to describe ohmic measurements are ac conductance, ac impedance, and dc resistance. They are defined by the test equipment providers and IEEE and refer to the method of taking ohmic measurements of a lead acid battery. For example, in one manufacturer's ac conductance equipment measurements are taken by applying a voltage of a known frequency and amplitude across a cell or battery unit and observing the ac current flow it produces in response to the voltage. A manufacturer of an ac impedance meter measures ac current of a known frequency and amplitude that is passed through the whole battery string and determines the impedances of each cell or unit by measuring the resultant ac voltage drop across them. On the other hand, dc resistance of a cell is measured by a third manufacturer's equipment by applying a dc load across the cell or unit and measuring the step change in both the voltage and current to calculate the internal dc resistance of the cell or unit.

It is important to note that because of the rapid development of the market for ohmic measurement devices, there were no standards developed or used to mandate the test signals used in making ohmic measurements. Manufacturers using proprietary methods and applying different frequencies and magnitudes for their signals have developed a diversity of measurement devices. This diversity in test signals coupled with the three different types of ohmic measurements techniques (impedance conductance and resistance) make it impossible to always get the same ohmic measurement for a cell with different ohmic measurement devices. However, IEEE has recognized the great value for choosing one device for ohmic measurement, no matter who makes it or the method to calculate the ohmic measurement. The only caution given by IEEE and the battery manufacturers is that when trending the cells of a lead acid station battery consistent ohmic measurement devices should be used to establish the baseline measurement and to trend the battery set for its entire life.

For VRLA batteries both IEEE Standard 1188 (Maintenance, Testing and Replacement of VRLA Batteries) and IEEE Standard 1187 (Installation Design and Installation of VRLA Batteries) recognize the importance of the maintenance activity of establishing a baseline for "cell/unit internal ohmic measurements (impedance, conductance and resistance)" and trending them at frequent intervals over the life of the battery. There are extensive discussions about the need for taking these measurements in these standards. IEEE Standard 1188 requires taking internal ohmic values as described in Annex C4 during regular inspections of the station battery. For VRLA batteries IEEE Standard 1188 in talking about the necessity of establishing a baseline and trending it over time says, "…depending on the degree of change a performance test, cell replacement or other corrective action may be necessary…" (IEEE std 1188-2005, C.4 page 18).

For VLA batteries IEEE Standard 484 (Installation of VLA batteries) gives several guidelines about establishing baseline measurements on newly installed lead acid stationary batteries. The standard also discusses the need to look for significant changes in the ohmic measurements, the caution that measurement data will differ with each type of model of instrument used, and lists a number of factors that affect ohmic measurements.

At the beginning of the 21st century, EPRI conducted a series of extensive studies to determine the relationship of internal ohmic measurements to the capacity of a lead acid battery cell. The studies indicated that internal ohmic measurements were in fact a good indicator of a lead acid battery cell's capacity, but because users often were only interested in the total station battery capacity and the technology does not precisely predict overall battery capacity, if a user only needs "an accurate measure of the overall battery capacity," they should "perform a battery capacity test."

Prior to the EPRI studies some large and small companies which owned and maintained station dc supplies in NERC Protection Systems developed maintenance programs where trending of ohmic measurements of cells/units of the station's battery became the maintenance activity for determining if the station battery could perform as manufactured. By evaluation of the trending of the ohmic measurements over time, the owner could track the performance of the individual components of the station battery and determine if a total station battery or components of it required capacity testing, removal, replacement or in many instances replacement of the entire station battery. By taking this condition based approach these owners have eliminated having to perform capacity testing at prescribed intervals to determine if a battery needs to be replaced and are still able to effectively determine if a station battery can perform as manufactured.

My VRLA batteries have multiple-cells within an individual battery jar (or unit); how am I expected to comply with the cell-to-cell ohmic measurement requirements on these units that I cannot get to?

Measurement of cell/unit (not all batteries allow access to "individual cells" some "units" or jars may have multiple cells within a jar) internal ohmic values of all types of lead acid batteries where the cells of the battery are not visible is a station dc supply maintenance activity in Table 1-4. In cases where individual cells in a multi-cell unit are inaccessible, an ohmic measurement of the entire unit may be made.

I have a concern about my batteries being used to support additional auxiliary loads beyond my protection control systems in a generation station. Is ohmic measurement testing sufficient for my needs?

While this standard is focused on addressing requirements for Protection Systems, if batteries are used to service other load requirements beyond that of Protection Systems (e.g. pumps, valves, inverter loads), the functional entity may consider additional testing to confirm that the capacity of the battery is sufficient to support all loads.

Why verify voltage?

There are two required maintenance activities associated with verification of dc voltages in Table 1-4. These two required activities are to verify station dc supply voltage and float voltage of the battery charger, and have different maximum maintenance intervals. Both of these voltage verification requirements relate directly to the battery charger maintenance.

The verification of the dc supply voltage is simply an observation of battery voltage to prove that the charger has not been lost or is not malfunctioning; a reading taken from the battery charger panel meter or even SCADA values of the dc voltage could be some of the ways that one could satisfy the requirements. Low battery voltage below float voltage indicates that the battery may be on discharge and, if not corrected, the station battery could discharge down to some extremely low value that will not operate the Protection System. High voltage, close to or

above the maximum allowable dc voltage for equipment connected to the station dc supply indicates the battery charger may be malfunctioning by producing high dc voltage levels on the Protection System. If corrective actions are not taken to bring the high voltage down, the dc power supplies and other electronic devices connected to the station dc supply may be damaged. The maintenance activity of verifying the float voltage of the battery charger is not to prove that a charger is lost or producing high voltages on the station dc supply, but rather to prove that the charger is properly floating the battery within the proper voltage limits. As above, there are many ways that this requirement can be met.

Why check for the electrolyte level?

In vented lead-acid (VLA) and nickel-cadmium (NiCad) batteries the visible electrolyte level must be checked as one of the required maintenance activities that must be performed at an interval that is equal to or less than the maximum maintenance interval of Table 1-4. Because the electrolyte level in valve-regulated lead-acid (VRLA) batteries cannot be observed, there is no maintenance activity listed in Table 1-4 of the standard for checking the electrolyte level. Low electrolyte level of any cell of a VLA or NiCad station battery is a condition requiring correction. Typically, the electrolyte level should be returned to an acceptable level for both types of batteries (VLA and NiCad) by adding distilled or other approved-quality water to the cell.

Often people confuse the interval for watering all cells required due to evaporation of the electrolyte in the station battery cells with the maximum maintenance interval required to check the electrolyte level. In many of the modern station batteries, the jar containing the electrolyte is so large with the band between the high and low electrolyte level so wide that normal evaporation which would require periodic watering of all cells takes several years to occur. However, because loss of electrolyte due to cracks in the jar, overcharging of the station battery, or other unforeseen events can cause rapid loss of electrolyte; the shorter maximum maintenance intervals for checking the electrolyte level are required. A low level of electrolyte in a VLA battery cell which exposes the tops of the plates can cause the exposed portion of the plates to accelerated sulfation resulting in loss of cell capacity. Also, in a VLA battery where the electrolyte level goes below the end of the cell withdrawal tube or filling funnel, gasses can exit the cell by the tube instead of the flame arrester and present an explosion hazard.

What are the parameters that can be evaluated in Tables 1-4(a) and 1-4(b)?

The most common parameter that is periodically trended and evaluated by industry today to verify that the station battery can perform as manufactured is internal ohmic cell/unit measurements.

In the mid 1990s, several large and small utilities began developing maintenance and testing programs for Protection System station batteries using a condition based maintenance approach of trending internal ohmic measurements to each station battery cell's baseline value. Battery owners use the data collected from this maintenance activity to determine (1) when a station battery requires a capacity test (instead of performing a capacity test on a predetermined, prescribed interval), (2) when an individual cell or battery unit should be replaced, or (3) based on the analysis of the trended data, if the station battery should be replaced without performing a capacity test.

Other examples of measurable parameters that can be periodically trended and evaluated for lead acid batteries are cell voltage, float current, connection resistance. However, periodically

trending and evaluating cell/unit Ohmic measurements are the most common battery/cell parameters that are evaluated by industry to verify a lead acid battery string can perform as manufactured.

Why does it appear that there are two maintenance activities in Table 1-4(b) (for VRLA batteries) that appear to be the same activity and have the same maximum maintenance interval?

There are two different and distinct reasons for doing almost the same maintenance activity at the same interval for valve-regulated lead-acid (VRLA) batteries. The first similar activity for VRLA batteries (Table 1-4(b)) that has the same maximum maintenance interval is to "measure battery cell/unit internal ohmic values." Part of the reason for this activity is because the visual inspection of the cell condition is unavailable for VRLA batteries. Besides the requirement to measure the internal ohmic measurements of VRLA batteries to determine the internal health of the cell, the maximum maintenance interval for this activity is significantly shorter than the interval for vented lead-acid (VLA) due to some unique failure modes for VRLA batteries. Some of the potential problems that VRLA batteries are susceptible to that do not affect VLA batteries are thermal runaway, cell dry-out, and cell reversal when one cell has a very low capacity.

The other similar activity listed in Table 1-4(b) is "…verify that the station battery can perform as manufactured by evaluating the measured cell/unit measurements indicative of battery performance (e.g internal ohmic values) against the station battery baseline." This activity allows an owner the option to choose between this activity with its much shorter maximum maintenance interval or the longer maximum maintenance interval for the maintenance activity to "Verify that the station battery can perform as manufactured by conducting a performance or modified performance capacity test of the entire battery bank."

For VRLA batteries, there are two drivers for internal ohmic readings. The first driver is for a means to trend battery life. Trending against the baseline of VRLA cells in a battery string is essential to determine the approximate state of health of the battery. Ohmic measurement testing may be used as the mechanism for measuring the battery cells. If all the cells in the string exhibit a consistent trend line and that trend line has not risen above a specific deviation (e.g. 30%) over baseline for impedance tests or below baseline for conductance tests, then a judgment can be made that the battery is still in a reasonably good state of health and able to 'perform as manufactured.' It is essential that the specific deviation mentioned above is based on data (test or otherwise) that correlates the ohmic readings for a specific battery/tester combination to the health of the battery. This is the intent of the "perform **as** manufactured six-month test" at Row 4 on Table 1-4b.

The second big driver is VRLA batteries tendency for thermal runaway. This is the intent of the "thermal runaway test" at Row 2 on Table 1-4b. In order to detect a cell in thermal runaway, you need not necessarily have a formal trending program. When a single cell/unit changes significantly or significantly varies from the other cells (e.g. a doubling of resistance/impedance or a 50% decrease in conductance), there is a high probability that the cell/unit/string needs to be replaced as soon as possible. In other words, if the battery is 10 years old and all the cells have approached a significant change in ohmic values over baseline, then you have a battery which is approaching end of life. You need to get ready to buy a new battery, but you do not have to worry about an impending catastrophic failure. On the other hand, if the battery is five years old and you have one cell that has a markedly different ohmic reading than all the other cells, then you need to be worried that this cell is susceptible to thermal runaway. If the float

(charging) current has risen significantly and the ohmic measurement has increased/decreased as described above then concern of catastrophic failure should trigger attention for corrective action.

If an entity elects to use a capacity test rather than a cell ohmic value trending program, this does not eliminate the need to be concerned about thermal runaway – the entity still needs to do the six-month readings and look for cells which are outliers in the string but they need not trend results against the factory/as new baseline. Some entities will not mind the extra administrative burden of having the ongoing trending program against baseline - others would rather just do the capacity test and not have to trend the data against baseline. Nonetheless, all entities must look for ohmic outliers on a six-month basis.

It is possible to accomplish both tasks listed (trend testing for capability and testing for thermal runaway candidates) with the very same ohmic test. It becomes an analysis exercise of watching the trend from baselines and watching for the oblique cell measurement.

In table 1-4(f) (Exclusions for Protection System Station dc Supply Monitoring Devices and Systems), must all component attributes listed in the table be met before an exclusion can be granted for a maintenance activity?

Table 1-4(f) was created by the drafting team to allow Protection System dc supply owners to obtain exclusions from periodic maintenance activities by using monitoring devices. The basis of the exclusions granted in the table is that the monitoring devices must incorporate the monitoring capability of microprocessor based components which perform continuous self-monitoring. For failure of the microprocessor device used in dc supply monitoring, the self checking routine in the microprocessor must generate an alarm which will be reported within 24 hours of device failure to a location where corrective action can be initiated.

Table 1-4(f) lists 8 component attributes along with a specific periodic maintenance activity associated with each of the 8 attributes listed. If an owner of a station dc supply wants to be excluded from periodically performing one of the 8 maintenance activities listed in table 1-4(f), the owner must have evidence that the monitoring and alarming component attributes associated with the excluded maintenance activity are met by the self checking microprocessor based device with the specific component attribute listed in the table 1-4(f).

For example if an owner of a VLA station battery does not want to “verify station dc supply voltage” every “4 calendar months” (see table 1-4(a)), the owner can install a monitoring and alarming device “with high and low voltage monitoring and alarming of the battery charger voltage to detect charger overvoltage and charger failure” and “no periodic verification of station dc supply voltage is required” (see table 1-4(f) first row). However, if for the same Protection System discussed above, the owner does not install “electrolyte level monitoring and alarming in every cell” and “unintentional dc ground monitoring and alarming” (see second and third rows of table 1-4(f)), the owner will have to “inspect electrolyte level and for unintentional grounds” every “4 calendar months” (see table 1-4(a)).

15.5 Associated communications equipment (Table 1-2)

The equipment used for tripping in a communications-assisted trip scheme is a vital piece of the trip circuit. Remote action causing a local trip can be thought of as another parallel trip path to the trip coil that must be tested. Besides the trip output and wiring to the trip coil(s), there is also a communications medium that must be maintained. Newer technologies now exist that achieve communications-assisted tripping without the conventional wiring practices of older technology. For example, older technologies may have included Frequency Shift Key methods. This technology requires that guard and trip levels be maintained. The actual tripping path(s) to the trip coil(s) may be tested as a parallel trip path within the dc control circuitry tests. Emerging technologies transfer digital information over a variety of carrier mediums that are then interpreted locally as trip signals. The requirements apply to the communicated signal needed for the proper operation of the protective relay trip logic or scheme. Therefore, this standard is applied to equipment used to convey both trip signals (permissive or direct) and block signals.

It was the intent of this standard to require that a test be performed on any communications-assisted trip scheme, regardless of the vintage of technology. The essential element is that the tripping (or blocking) occurs locally when the remote action has been asserted; or that the tripping (or blocking) occurs remotely when the local action is asserted. Note that the required testing can still be done within the concept of testing by overlapping segments. Associated communications equipment can be (but is not limited to) testing at other times and different frequencies as the protective relays, the individual trip paths and the affected circuit interrupting devices.

Some newer installations utilize digital signals over fiber-optics from the protective relays in the control house to the circuit interrupting device in the yard. This method of tripping the circuit breaker, even though it might be considered communications, must be maintained per the dc control circuitry maintenance requirements.

15.5.1 Frequently Asked Questions:

What are some examples of mechanisms to check communications equipment functioning?

For unmonitored Protection Systems, various types of communications systems will have different facilities for on-site integrity checking to be performed at least every four months during a substation visit. Some examples are, but not limited to:

- On-off power-line carrier systems can be checked by performing a manual carrier keying test between the line terminals, or carrier check-back test from one terminal.
- Systems which use frequency-shift communications with a continuous guard signal (over a telephone circuit, analog microwave system, etc.) can be checked by observing for a loss-of-guard indication or alarm. For frequency-shift power-line carrier systems, the guard signal level meter can also be checked.
- Hard-wired pilot wire line Protection Systems typically have pilot-wire monitoring relays that give an alarm indication for a pilot wire ground or open pilot wire circuit loop.
- Digital communications systems typically have a data reception indicator or data error indicator (based on loss of signal, bit error rate, or frame error checking).

For monitored Protection Systems, various types of communications systems will have different facilities for monitoring the presence of the communications channel, and activating alarms that can be monitored remotely. Some examples are, but not limited to:

- On-off power-line carrier systems can be shown to be operational by automated periodic power-line carrier check-back tests with remote alarming of failures.
- Systems which use a frequency-shift communications with a continuous guard signal (over a telephone circuit, analog microwave system, etc.) can be remotely monitored with a loss-of-guard alarm or low signal level alarm.
- Hard-wired pilot wire line Protection Systems can be monitored by remote alarming of pilot-wire monitoring relays.
- Digital communications systems can activate remotely monitored alarms for data reception loss or data error indications.
- Systems can be queried for the data error rates.

For the highest degree of monitoring of Protection Systems, the communications system must monitor all aspects of the performance and quality of the channel that show it meets the design performance criteria, including monitoring of the channel interface to protective relays.

- In many communications systems signal quality measurements, including signal-to-noise ratio, received signal level, reflected transmitter power or standing wave ratio, propagation delay, and data error rates are compared to alarm limits. These alarms are connected for remote monitoring.
- Alarms for inadequate performance are remotely monitored at all times, and the alarm communications system to the remote monitoring site must itself be continuously monitored to assure that the actual alarm status at the communications equipment location is continuously being reflected at the remote monitoring site.

What is needed for the four-month inspection of communications-assisted trip scheme equipment?

The four-month inspection applies to unmonitored equipment. An example of compliance with this requirement might be, but is not limited to:

With each site visit, check that the equipment is free from alarms; check any metered signal levels, and that power is still applied. While this might be explicit for a particular type of equipment (i.e., FSK equipment), the concept should be that the entity verify that the communications equipment that is used in a Protection System is operable through a cursory inspection and site visit. This site visit can be eliminated on this particular example if the FSK equipment had a monitored alarm on Loss of Guard. Blocking carrier systems with auto checkbacks will present an alarm when the channel fails allowing a visual indication. With no auto checkback, the channel integrity will need to be verified by a manual checkback or a two ended signal check. This check could also be eliminated by bring the auto checkback failure alarm to the monitored central location.

Does a fiber optic I/O scheme used for breaker tripping or control within a station, for example - transmitting a trip signal or control logic between the control house and the breaker control cabinet, constitute a communications system?

This equipment is presently classified as being part of the Protection System control circuitry and tested per the portions of Table 1 applicable to "Protection System Control Circuitry", rather than those portions of the table applicable to communications equipment.

What is meant by "Channel" and "Communications Systems" in Table 1-2?

The transmission of logic or data from a relay in one station to a relay in another station for use in a pilot relay scheme will require a communications system of some sort. Typical relay communications systems use fiber optics, leased audio channels, power line carrier, and microwave. The overall communications system includes the channel and the associated communications equipment.

This standard refers to the "channel" as the medium between the transmitters and receivers in the relay panels such as a leased audio or digital communications circuit, power line and power line carrier auxiliary equipment, and fiber. The dividing line between the channel and the associated communications equipment is different for each type of media.

Examples of the Channel:

- Power Line Carrier (PLC) - The PLC channel starts and ends at the PLC transmitter and receiver output unless there is an internal hybrid. The channel includes the external hybrids, tuners, wave traps and the power line itself.
- Microwave –The channel includes the microwave multiplexers, radios, antennae and associated auxiliary equipment. The audio tone and digital transmitters and receivers in the relay panel are the associated communications equipment.
- Digital/Audio Circuit – The channel includes the equipment within and between the substations. The associated communications equipment includes the relay panel transmitters and receivers and the interface equipment in the relays.

- Fiber Optic – The channel starts at the fiber optic connectors on the fiber distribution panel at the local station and goes to the fiber optic distribution panel at the remote substation. The jumpers that connect the relaying equipment to the fiber distribution panel and any optical-electrical signal format converters are the associated communications equipment

Figure 1-2, A-1 and A-2 at the end of this document show good examples of the communications channel and the associated communications equipment.

In Table 1-2, the Maintenance Activities section of the Protective System Communications Equipment and Channels refers to the quality of the channel meeting "performance criteria." What is meant by performance criteria?

Protection System communications channels must have a means of determining if the channel and communications equipment is operating normally. If the channel is not operating normally, an alarm will be indicated. For unmonitored systems, this alarm will probably be on the panel. For monitored systems, the alarm will be transmitted to a remote location.

Each entity will have established a nominal performance level for each Protection System communications channel that is consistent with proper functioning of the Protection System. If that level of nominal performance is not being met, the system will go into alarm. Following are some examples of Protection System communications channel performance measuring:

- For direct transfer trip using a frequency shift power line carrier channel, a guard level monitor is part of the equipment. A normal receive level is established when the system is calibrated and if the signal level drops below an established level, the system will indicate an alarm.
- An on-off blocking signal over power line carrier is used for directional comparison blocking schemes on transmission lines. During a Fault, block logic is sent to the remote relays by turning on a local transmitter and sending the signal over the power line to a receiver at the remote end. This signal is normally off so continuous levels cannot be checked. These schemes use check-back testing to determine channel performance. A predetermined signal sequence is sent to the remote end and the remote end decodes this signal and sends a signal sequence back. If the sending end receives the correct information from the remote terminal, the test passes and no alarm is indicated. Full power and reduced power tests are typically run. Power levels for these tests are determined at the time of calibration.
- Pilot wire relay systems use a hardwire communications circuit to communicate between the local and remote ends of the protective zone. This circuit is monitored by circulating a dc current between the relay systems. A typical level may be 1 mA. If the level drops below the setting of the alarm monitor, the system will indicate an alarm.
- Modern digital relay systems use data communications to transmit relay information to the remote end relays. An example of this is a line current differential scheme commonly used on transmission lines. The protective relays communicate current magnitude and phase information over the communications path to determine if the Fault is located in the protective zone. Quantities such as digital packet loss, bit error rate and channel delay are monitored to determine the quality of the channel. These

limits are determined and set during relay commissioning. Once set, any channel quality problems that fall outside the set levels will indicate an alarm.

The previous examples show how some protective relay communications channels can be monitored and how the channel performance can be compared to performance criteria established by the entity. This standard does not state what the performance criteria will be; it just requires that the entity establish nominal criteria so Protection System channel monitoring can be performed.

How is the performance criteria of Protection System communications equipment involved in the maintenance program?

An entity determines the acceptable performance criteria, depending on the technology implemented. If the communications channel performance of a Protection System varies from the pre-determined performance criteria for that system, then these results should be investigated and resolved.

How do I verify the A/D converters of microprocessor-based relays?

There are a variety of ways to do this. Two examples would be: using values gathered via data communications and automatically comparing these values with values from other sources, or using groupings of other measurements (such as vector summation of bus feeder currents) for comparison. Many other methods are possible.

15.6 Alarms (Table 2)

In addition to the tables of maintenance for the components of a Protection System, there is an additional table added for alarms. This additional table was added for clarity. This enabled the common alarm attributes to be consolidated into a single spot, and, thus, make it easier to read the Tables 1-1 through 1-5. The alarms need to arrive at a site wherein a corrective action can be initiated. This could be a control room, operations center, etc. The alarming mechanism can be a standard alarming system or an auto-polling system; the only requirement is that the alarm be brought to the action-site within 24 hours. This effectively makes manned-stations equivalent to monitored stations. The alarm of a monitored point (for example a monitored trip path with a lamp) in a manned-station now makes that monitored point eligible for monitored status. Obviously, these same rules apply to a non-manned-station, which is that if the monitored point has an alarm that is auto-reported to the operations center (for example) within 24 hours, then it too is considered monitored.

15.6.1 Frequently Asked Questions:

Why are there activities defined for varying degrees of monitoring a Protection System component when that level of technology may not yet be available?

There may already be some equipment available that is capable of meeting the highest levels of monitoring criteria listed in the Tables. However, even if there is no equipment available today that can meet this level of monitoring the standard establishes the necessary requirements for when such equipment becomes available. By creating a roadmap for development, this provision makes the standard technology neutral. The Standard Drafting Team wants to avoid the need to revise the standard in a few years to accommodate technology advances that may be coming to the industry.

Does a fail-safe "form b" contact that is alarmed to a 24/7 operation center classify as an alarm path with monitoring?

If the fail-safe "form-b" contact that is alarmed to a 24/7 operation center causes the alarm to activate for failure of any portion of the alarming path from the alarm origin to the 24/7 operations center, then this can be classified as an alarm path with monitoring.

15.7 Distributed UFLS and Distributed UVLS Systems (Table 3)

Distributed UFLS and distributed UVLS systems have their maintenance activities documented in Table 3 due to their distributed nature allowing reduced maintenance activities and extended maximum maintenance intervals. Relays have the same maintenance activities and intervals as Table 1-1. Voltage and current-sensing devices have the same maintenance activity and interval as Table 1-3. DC systems need only have their voltage read at the relay every 12 years. Control circuits have the following maintenance activities every 12 years:

- Verify the trip path between the relay and lock-out and/or auxiliary tripping device(s).
- Verify operation of any lock-out and/or auxiliary tripping device(s) used in the trip circuit.
- No verification of trip path required between the lock-out (and/or auxiliary tripping device) and the non-BES interrupting device.
- No verification of trip path required between the relay and trip coil for circuits that have no lock-out and/or auxiliary tripping device(s).
- No verification of trip coil required.

No maintenance activity is required for associated communication systems for distributed UFLS and distributed UVLS schemes.

Non-BES interrupting devices that participate in a distributed UFLS or distributed UVLS scheme are excluded from the tripping requirement, and part of the control circuit test requirement; however, the part of the trip path control circuitry between the Load-Shed relay and lock-out or auxiliary tripping relay must be tested at least once every 12 years. In the case where there is no lock-out or auxiliary tripping relay used in a distributed UFLS or UVLS scheme which is not part of the BES, there is no control circuit test requirement. There are many circuit interrupting devices in the distribution system that will be operating for any given under-frequency event that requires tripping for that event. A failure in the tripping action of a single distributed system circuit breaker (or non-BES equipment interruption device) will be far less significant than, for example, any single transmission Protection System failure, such as a failure of a bus differential lock-out relay. While many failures of these distributed system circuit breakers (or non-BES equipment interruption device) could add up to be significant, it is also believed that many circuit breakers are operated often on just Fault clearing duty; and, therefore, these circuit breakers are operated at least as frequently as any requirements that appear in this standard.

There are times when a Protection System component will be used on a BES device, as well as a non-BES device, such as a battery bank that serves both a BES circuit breaker and a non-BES interrupting device used for UFLS. In such a case, the battery bank (or other Protection System component) will be subject to the Tables of the standard because it is used for the BES.

15.7.1 Frequently Asked Questions:

The standard reaches further into the distribution system than we would like for UFLS and UVLS

While UFLS and UVLS equipment are located on the distribution network, their job is to protect the Bulk Electric System. This is not beyond the scope of NERC's 215 authority.

FPA section 215(a) definitions section defines bulk power system as: "(A) facilities and control Systems necessary for operating an interconnected electric energy transmission network (or any portion thereof)." That definition, then, is limited by a later statement which adds the term bulk power system "…does not include facilities used in the local distribution of electric energy." Also, Section 215 also covers users, owners, and operators of bulk power Facilities.

UFLS and UVLS (when the UVLS is installed to prevent system voltage collapse or voltage instability for BES reliability) are not "used in the local distribution of electric energy," despite their location on local distribution networks. Further, if UFLS/UVLS Facilities were not covered by the reliability standards, then in order to protect the integrity of the BES during under-frequency or under-voltage events, that Load would have to be shed at the Transmission bus to ensure the Load-generation balance and voltage stability is maintained on the BES.

15.8 Examples of Evidence of Compliance

To comply with the requirements of this standard, an entity will have to document and save evidence. The evidence can be of many different forms. The Standard Drafting Team recognizes that there are concurrent evidence requirements of other NERC standards that could, at times, fulfill evidence requirements of this Standard.

15.8.1 Frequently Asked Questions:

What forms of evidence are acceptable?

Acceptable forms of evidence, as relevant for the requirement being documented include, but are not limited to:

- Process documents or plans
- Data (such as relay settings sheets, photos, SCADA, and test records)
- Database lists, records and/or screen shots that demonstrate compliance information
- Prints, diagrams and/or schematics
- Maintenance records
- Logs (operator, substation, and other types of log)
- Inspection forms
- Mail, memos, or email proving the required information was exchanged, coordinated, submitted or received
- Check-off forms (paper or electronic)
- Any record that demonstrates that the maintenance activity was known, accounted for, and/or performed.

If I replace a failed Protection System component with another component, what testing do I need to perform on the new component?

In order to reset the Table 1 maintenance interval for the replacement component, all relevant Table 1 activities for the component should be performed.

I have evidence to show compliance for PRC-016 ("Special Protection System Misoperation"). Can I also use it to show compliance for this Standard, PRC-005-2?

Maintaining evidence for operation of Special Protection Systems could concurrently be utilized as proof of the operation of the associated trip coil (provided one can be certain of the trip coil involved). Thus, the reporting requirements that one may have to do for the Misoperation of a Special Protection Scheme under PRC-016 could work for the activity tracking requirements under this PRC-005-2.

I maintain Disturbance records which show Protection System operations. Can I use these records to show compliance?

These records can be concurrently utilized as dc trip path verifications, to the degree that they demonstrate the proper function of that dc trip path.

I maintain test reports on some of my Protection System components. Can I use these test reports to show that I have verified a maintenance activity?

Yes.

References

1. Protection System Maintenance: A Technical Reference. Prepared by the System Protection and Controls Task Force of the NERC Planning Committee. Dated September 13, 2007.

2. "Predicating The Optimum Routine test Interval For Protection Relays," by J. J. Kumm, M.S. Weber, D. Hou, and E. O. Schweitzer, III, IEEE Transactions on Power Delivery, Vol. 10, No. 2, April 1995.

3. "Transmission Relay System Performance Comparison For 2000, 2001, 2002, 2003, 2004 and 2005," Working Group I17 of Power System Relaying Committee of IEEE Power Engineering Society, May 2006.

4. "A Survey of Relaying Test Practices," Special Report by WG I11 of Power System Relaying Committee of IEEE Power Engineering Society, September 16, 1999.

5. "Transmission Protective Relay System Performance Measuring Methodology," Working Group I3 of Power System Relaying Committee of IEEE Power Engineering Society, January 2002.

6. "Processes, Issues, Trends and Quality Control of Relay Settings," Working Group C3 of Power System Relaying Committee of IEEE Power Engineering Society, December 2006.

7. "Proposed Statistical Performance Measures for Microprocessor-Based Transmission-Line Protective Relays, Part I - Explanation of the Statistics, and Part II - Collection and Uses of Data," Working Group D5 of Power System Relaying Committee of IEEE Power Engineering Society, May 1995; Papers 96WM 016-6 PWRD and 96WM 127-1 PWRD, 1996 IEEE Power Engineering Society Winter Meeting.

8. "Analysis And Guidelines For Testing Numerical Protection Schemes," Final Report of CIGRE WG 34.10, August 2000.

9. "Use of Preventative Maintenance and System Performance Data to Optimize Scheduled Maintenance Intervals," H. Anderson, R. Loughlin, and J. Zipp, Georgia Tech Protective Relay Conference, May 1996.

10. "Battery Performance Monitoring by Internal Ohmic Measurements" EPRI Application Guidelines for Stationary Batteries TR- 108826 Final Report, December 1997.

11. "IEEE Recommended Practice for Maintenance, Testing, and Replacement of Valve-Regulated Lead-Acid (VRLA) Batteries for Stationary Applications," IEEE Power Engineering Society Std 1188 – 2005.

12. "IEEE Recommended Practice for Maintenance, Testing, and Replacement of Vented Lead-Acid Batteries for Stationary Applications," IEEE Power & Engineering Society Std 45-2010.

13. "IEEE Recommended Practice for Installation design and Installation of Vented Lead-Acid Batteries for Stationary Applications," IEEE Std 484 – 2002.

14. "Stationary Battery Monitoring by Internal Ohmic Measurements," EPRI Technical Report, 1002925 Final Report, December 2002.

15. "Stationary Battery Guide: Design Application, and Maintenance" EPRI Revision 2 of TR-100248, 1006757, August 2002.

PSMT SDT References

16. “Essentials of Statistics for Business and Economics” Anderson, Sweeney, Williams, 2003

17. “Introduction to Statistics and Data Analysis” - Second Edition, Peck, Olson, Devore, 2005

18. “Statistical Analysis for Business Decisions” Peters, Summers, 1968

Figures

Figure 1: Typical Transmission System

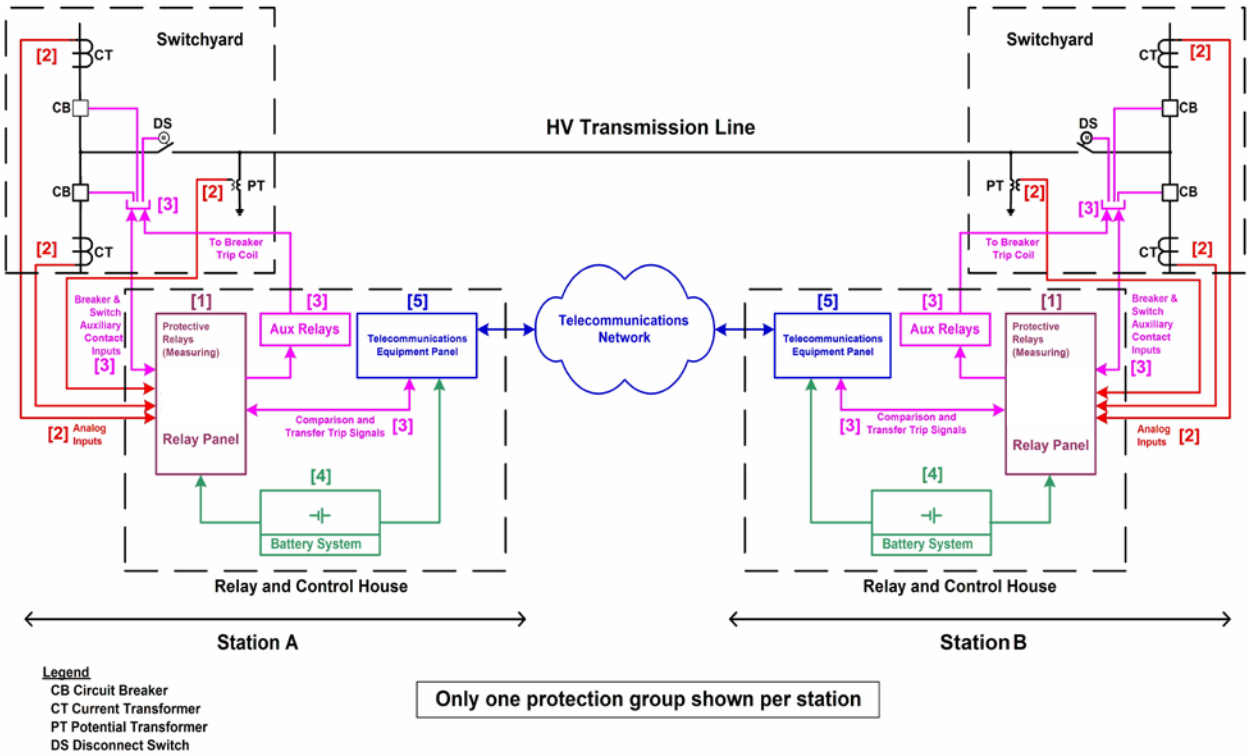

For information on components, see ***Figure 1 & 2 Legend – components of Protection Systems***

Figure 2: Typical Generation System

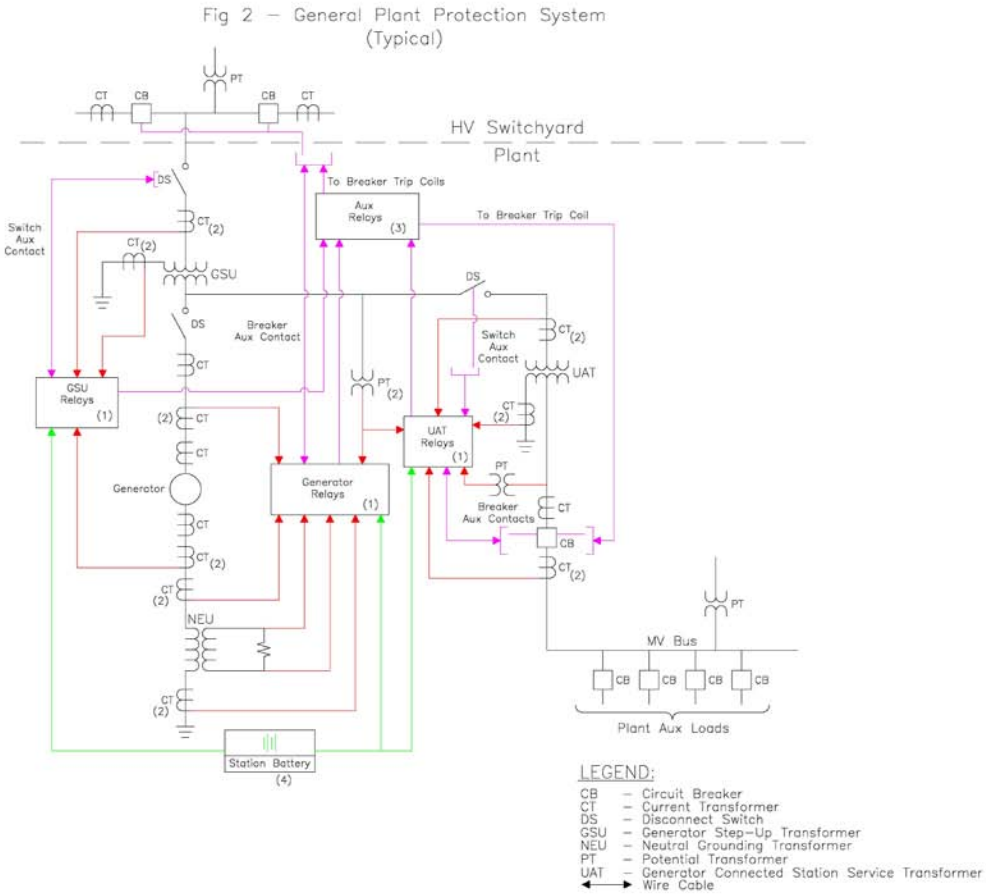

Note: Figure 2 may show elements that are not included within PRC-005-2, and also may not be all-inclusive; see the Applicability section of the standard for specifics.

For information on components, see ***Figure 1 & 2 Legend – components of Protection Systems***

Figure 1 & 2 Legend – components of Protection Systems

Number in Figure	component of Protection System	Includes	Excludes
1	Protective relays which respond to electrical quantities	All protective relays that use current and/or voltage inputs from current & voltage sensors and that trip the 86, 94 or trip coil.	Devices that use non-electrical methods of operation including thermal, pressure, gas accumulation, and vibration. Any ancillary equipment not specified in the definition of Protection Systems. Control and/or monitoring equipment that is not a part of the automatic tripping action of the Protection System
2	Voltage and current sensing devices providing inputs to protective relays	The signals from the voltage & current sensing devices to the protective relay input.	Voltage & current sensing devices that are not a part of the Protection System, including sync-check systems, metering systems and data acquisition systems.
3	Control circuitry associated with protective functions	All control wiring (or other medium for conveying trip signals) associated with the tripping action of 86 devices, 94 devices or trip coils (from all parallel trip paths). This would include fiber-optic systems that carry a trip signal as well as hard-wired systems that carry trip current.	Closing circuits, SCADA circuits, other devices in control scheme not passing trip current
4	Station dc supply	Batteries and battery chargers and any control power system which has the function of supplying power to the protective relays, associated trip circuits and trip coils.	Any power supplies that are not used to power protective relays or their associated trip circuits and trip coils.
5	Communications systems necessary for correct operation of protective functions	Tele-protection equipment used to convey specific information, in the form of analog or digital signals, necessary for the correct operation of protective functions.	Any communications equipment that is not used to convey information necessary for the correct operation of protective functions.

Additional information can be found in References

Appendix A

The following illustrates the concept of overlapping verifications and tests as summarized in Section 10 of the paper. As an example, Figure A-1 shows protection for a critical transmission line by carrier blocking directional comparison pilot relaying. The goal is to verify the ability of the entire two-terminal pilot protection scheme to protect for line Faults, and to avoid over-tripping for Faults external to the transmission line zone of protection bounded by the current transformer locations.

Figure A-1

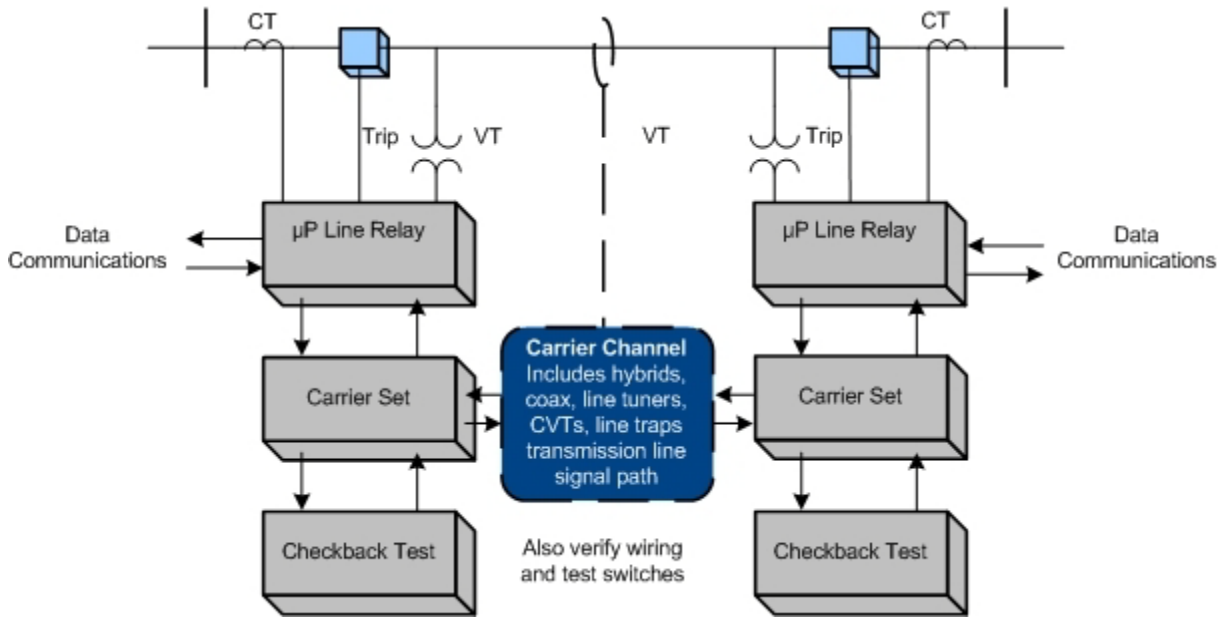

In this example (Figure A1), verification takes advantage of the self-monitoring features of microprocessor multifunction line relays at each end of the line. For each of the line relays themselves, the example assumes that the user has the following arrangements in place:

1. The relay has a data communications port that can be accessed from remote locations.
2. The relay has internal self-monitoring programs and functions that report failures of internal electronics, via communications messages or alarm contacts to SCADA.
3. The relays report loss of dc power, and the relays themselves or external monitors report the state of the dc battery supply.
4. The CT and PT inputs to the relays are used for continuous calculation of metered values of volts, amperes, plus Watts and VARs on the line. These metered values are reported by data communications. For maintenance, the user elects to compare these readings to those of other relays, meters, or DFRs. The other readings may be from redundant relaying or measurement systems or they may be derived from values in other protection zones. Comparison with other such readings to within required relaying accuracy verifies voltage & current sensing devices, wiring, and analog signal input processing of the relays. One effective way to do this is to utilize the relay metered values directly in SCADA, where they can be compared with other references or state estimator values.

5. Breaker status indication from auxiliary contacts is verified in the same way as in (2). Status indications must be consistent with the flow or absence of current.
6. Continuity of the breaker trip circuit from dc bus through the trip coil is monitored by the relay and reported via communications.
7. Correct operation of the on-off carrier channel is also critical to security of the Protection System, so each carrier set has a connected or integrated automatic checkback test unit. The automatic checkback test runs several times a day. Newer carrier sets with integrated checkback testing check for received signal level and report abnormal channel attenuation or noise, even if the problem is not severe enough to completely disable the channel.

These monitoring activities plus the check-back test comprise automatic verification of all the Protection System elements that experience tells us are the most prone to fail. But, does this comprise a complete verification?

Figure A-2

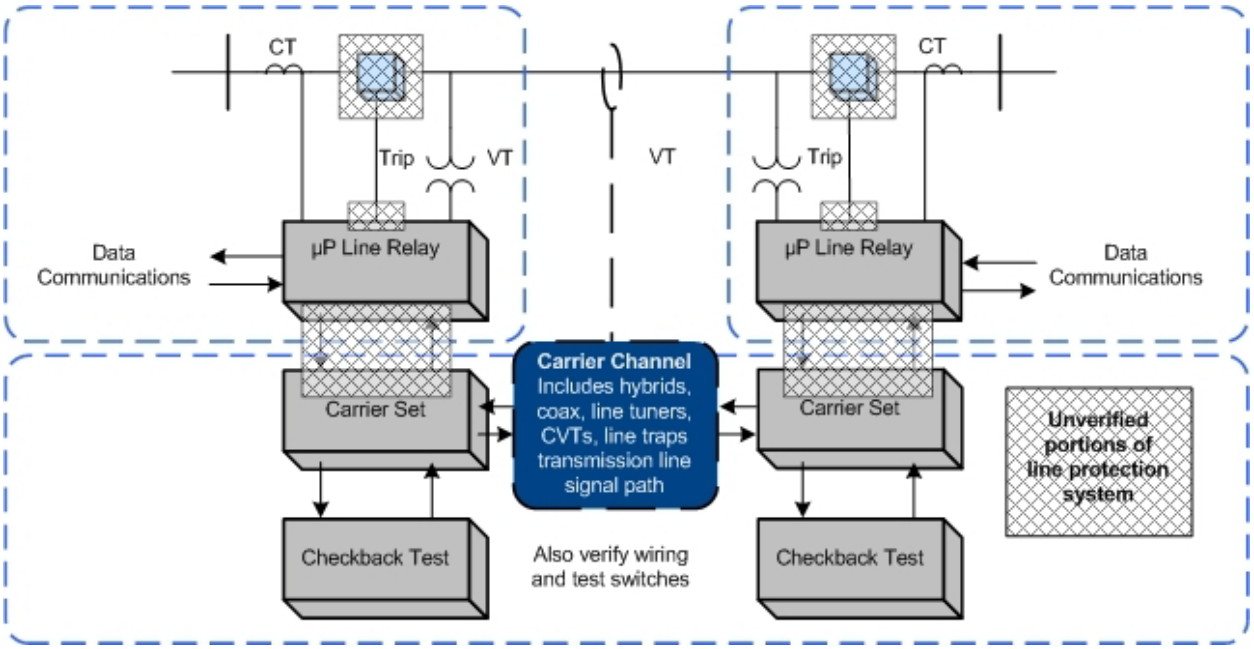

The dotted boxes of Figure A-2 show the sections of verification defined by the monitoring and verification practices just listed. These sections are not completely overlapping, and the shaded regions show elements that are not verified:

1. The continuity of trip coils is verified, but no means is provided for validating the ability of the circuit breaker to trip if the trip coil should be energized.
2. Within each line relay, all the microprocessors that participate in the trip decision have been verified by internal monitoring. However, the trip circuit is actually energized by the

contacts of a small telephone-type "ice cube" relay within the line protective relay. The microprocessor energizes the coil of this ice cube relay through its output data port and a transistor driver circuit. There is no monitoring of the output port, driver circuit, ice cube relay, or contacts of that relay. These components are critical for tripping the circuit breaker for a Fault.

3. The check-back test of the carrier channel does not verify the connections between the relaying microprocessor internal decision programs and the carrier transmitter keying circuit or the carrier receiver output state. These connections include microprocessor I/O ports, electronic driver circuits, wiring, and sometimes telephone-type auxiliary relays.
4. The correct states of breaker and disconnect switch auxiliary contacts are monitored, but this does not confirm that the state change indication is correct when the breaker or switch opens.

A practical solution for (1) and (2) is to observe actual breaker tripping, with a specified maximum time interval between trip tests. Clearing of naturally-occurring Faults are demonstrations of operation that reset the time interval clock for testing of each breaker tripped in this way. If Faults do not occur, manual tripping of the breaker through the relay trip output via data communications to the relay microprocessor meets the requirement for periodic testing.

PRC-005 does not address breaker maintenance, and its Protection System test requirements can be met by energizing the trip circuit in a test mode (breaker disconnected) through the relay microprocessor. This can be done via a front-panel button command to the relay logic, or application of a simulated Fault with a relay test set. However, utilities have found that breakers often show problems during Protection System tests. It is recommended that Protection System verification include periodic testing of the actual tripping of connected circuit breakers.

Testing of the relay-carrier set interface in (3) requires that each relay key its transmitter, and that the other relay demonstrate reception of that blocking carrier. This can be observed from relay or DFR records during naturally occurring Faults, or by a manual test. If the checkback test sequence were incorporated in the relay logic, the carrier sets and carrier channel are then included in the overlapping segments monitored by the two relays, and the monitoring gap is completely eliminated.

Appendix B

Protection System Maintenance Standard Drafting Team

Charles W. Rogers
Chairman
Consumers Energy Co.

John B. Anderson
Xcel Energy

Merle Ashton
Tri-State G&T

Bob Bentert
Florida Power & Light Company

Forrest Brock
Western Farmers Electric Cooperative

Aaron Feathers
Pacific Gas and Electric Company

Sam Francis
Oncor Electric Delivery

Carol Gerou
Midwest Reliability Organization

Russell C. Hardison
Tennessee Valley Authority

David Harper
NRG Texas Maintenance Services

James M. Kinney
FirstEnergy Corporation

Mark Lucas
ComEd

Kristina Marriott
ENOSERV

Al McMeekin
NERC

Michael Palusso
Southern California Edison

Mark Peterson
Great River Energy

John Schecter
American Electric Power

William D. Shultz
Southern Company Generation

Eric A. Udren
Quanta Technology

Scott Vaughan
City of Roseville Electric Department

Matthew Westrich
American Transmission Company

Philip B. Winston
Southern Company Transmission

David Youngblood
Luminant Power

John A. Zipp
ITC Holdings

Exhibit F

Technical Justification for Maintenance Intervals

Technical Basis for Maintenance Intervals in Tables 1, 2, & 3 of PRC-005-2

General

The relay manufacturers bulletin recommendations on test intervals for legacy electromechanical protective relays tended to run anywhere from 6 months to two years. Since these relays were made up of moving parts and discrete components the manufacturers were conservative in their maintenance recommendations; in lieu of performance based statistics. As utilities obtained maintenance performance information, the test intervals expanded with the realization the components were reliable, and that excessive maintenance can negatively affect reliability.

Most utilities developed their own maintenance practices based on the relay application/design, local climate, experience with relay types, test equipment type, budgets and reliability experience. The entity maintenance practices varied as each company had different factors influencing their intervals.
Through professional organizations and benchmarking involvement, utilities tried to incorporate best practices while minimizing maintenance expenses. Papers and studies have been published over the decades, identifying failure trends, maintenance practices, and maintenance intervals. Due to the wide variations of the influencing factors it became difficult to come up with a standard test interval. Protective relay application/design has a large influence on the test interval. The same relay used in a different scheme at a different voltage may have a different test interval requirement. The setting practices of the system protection group could also provide different requirements. Each entity's influencing factors would be different such that testing practices would vary, but would produce the similar power system reliability.

An IEEE Power System Relay Committee report, "A Survey of Relaying Test Practices", written by working group 11 of the Power System Relay Committee of the IEEE in January 2002, did an excellent job of identifying many of the influencing factors and reporting the different entity test intervals. In the 1991 version of the survey and report the average test interval for Electro-Mechanical (EM) Transmission relays was around 2 years. When the survey was repeated in 2001, the average test intervals for EM transmission relays had been extended to around three to five years. Non EM Transmission relays were tested at a 2 year average in 1991 where in 2001 the average for non EM relays was 5 years. Of course there were wide variations in test intervals depending on voltage and schemes. A PJM publication "PJM RELAY SUBCOMMITTEE-RELAY TESTING AND MAINTENANCE PRACTICES" document published in August 2006 by the PEA Relay Subcommittee recommended a 4 year interval for EM relays.

Many entity Protection System maintenance programs have grace periods built into them so the scheduled interval may be 4 years but allowances were given for workload and outage availability. It is acceptable to allow a slightly longer interval, not to exceed grace periods, in these cases.

In the late 1980's and early 1990's the new digital (microprocessor based) relays initiated changes in testing philosophies. The previous generations of electro-mechanical and solid state relays required testing and calibration to determine relay health. Microprocessor relays have self check and monitoring capabilities that alarm for relay failure. When properly monitored, this attribute significantly reduces the level of physical involvement in determining the relays' health.

Protection System Maintenance Standards

In the PRC-005-1 standard approved in 2007, utilities were required to provide a basis for their Protection System test intervals in their Protective System Maintenance Plans (PSMP) and to provide evidence that they met their PSMPs. Many entities built grace periods into their programs to allow for interval extensions for extenuating circumstances.

The new version, PRC-005-2, provides minimum maintenance activities and maximum equipment test intervals and a mechanism to use performance based maintenance to more conclusively adjust maintenance intervals. Entity programs which contain grace periods cannot exceed the maximum intervals in PRC-005-2.

The PRC-005-2 Standard Drafting Team based its maximum test interval recommendations for the various classes of protective relays in the System Protection and Control Task Force (SPCTF) white paper "Protection System Maintenance" dated September 13, 2007 and on the collective experience from the entities on the drafting team. The SPCTF recommended a 5 year interval for BES unmonitored electromechanical relays but allowed some grace periods for extenuating conditions. The PRC-005-2 drafting team modified the interval to 6 years to align with power plant outage scheduling without any grace period. The maintenance intervals proposed by the PRC-005-2 drafting team are not significantly different than industry averages when grace periods and outage scheduling are considered.

The drafting team incorporated the ability of new technologies to allow the industry to significantly extend the maintenance intervals by utilizing the monitoring capability of microprocessor based components. When proper monitoring is applied, the protective system maintenance personnel will be notified immediately when a protective relay or instrument transformer fails. PRC005-2 allows a 12 year interval on relays that are properly monitored since these devices will alarm for a failure when they have a problem as opposed to unmonitored relays experiencing an unidentified failure. Advanced monitoring techniques also allow other equipment intervals to be extended as detailed in the tables in the standard. The entities will have to document the applied monitoring techniques to utilize the longer test intervals. The drafting team believes that the application of new monitoring techniques (even with the longer test intervals) will provide better reliability than strictly time-based intervals used in the past.

TBM Interval Feedback

PRC-005-2 allows the entity to choose an interval for the time-based maintenance program that will be the best fit depending on the applicable influencing factors, and that will be less than the specified maximums. Feedback to determine if these intervals and requirements are effective will be provided through the analysis of the protective system Misoperations required in PRC-004. Investigations to determine the cause of the Misoperation could indicate that relay maintenance program changes are required.

The newly proposed PBM in appendix A of PRC-005-2 and in Requirement R2 will provide feedback to the managers of the Protection System Maintenance Program on the effectiveness of the maintenance intervals. It also provides a mechanism for adjusting the intervals if acceptable testing performance is not achieved. This type of maintenance program should provide maximum protection system performance as well as the most efficient use of resources.

The drafting team believes that the intervals provided in PRC-005-2 are in line with average industry practices and will allow the industry to extend maintenance intervals using modern monitoring methods. These intervals will also maximize the relay system performance providing acceptable BES reliability.

Condition Based Maintenance

In developing the maximum time intervals for PRC-005-2 the drafting team considered many influencing factors. These included, but were not limited to:

1. The components of a Protection System
2. The common failure modes of the components of a Protection System
3. The many methods of detecting failures in Protection System components
4. The maintenance approaches in use by entities throughout North America
5. The need to proactively approach maintenance as opposed to running to failure and reacting
6. The need for minimizing manual hands-on activities
7. The need for maximizing complete Protection System integrity
8. A business need to coordinate maintenance activities with the biggest capital driver (generators)
9. A business need to have scheduling management abilities
10. Available technology

A review of legacy traditional proactive maintenance programs shows that time-based maintenance (TBM) is simply not replaceable. However, PBM is nothing more than a TBM with the added responsibility of statistical analysis to take advantage of potential time savings in the maintenance program. Another modification of the TBM is the condition-based maintenance program.

A condition-based maintenance (CBM) program consists of methods to constantly monitor the condition, or health, of the protection system components and send an alarm to a central location where action can be initiated. Personnel will be dispatched to make repairs as a result of the alarm. Condition-based maintenance is a proactive approach for protection system maintenance. The drafting team included CBM in PRC-005-2 to allow entities to take advantage of this type of maintenance methodology. Traditionally, a device was known to be good only at the time of its last test. With CBM some devices are tested many times in a second. Thus if a device was only good at the time of its last test and its last test was a second ago then the condition of the device can be ascertained at any time. CBM maximizes testing, maximizes complete Protection System integrity and minimizes outages caused by human performance errors.

Detailed Interval Discussions:

Table 1-1 (Protective Relays)

Component Attributes:
Any unmonitored protective relay not having all the monitoring attributes specified in Table 2

Maximum Maintenance Interval: 6 calendar years
Maintenance Activity: *For all unmonitored relays:*

- *Verify that settings are as specified*

For non-microprocessor relays:

- *Test and, if necessary calibrate*

For microprocessor relays:

- *Verify operation of the relay inputs and outputs that are essential to proper functioning of the Protection System.*
- *Verify acceptable measurement of power system input values.*

The 6 calendar year activities are a "Cal-Check" of the various legacy or unmonitored microprocessor-based relays (and repair as needed). The microprocessor based equipment requires little or no maintenance. The maintenance activities require that the failure modes be checked on the equipment; this is stated in such a manner as to capture all varieties of equipment presently in use. While some equipment will require test equipment to manage the activities, other equipment can be routinely verified, without the traditional relay testing equipment. The 6 year interval was determined from the need for routine performance testing (in the absence of monitoring). 5 years was chosen as a starting point as outlined in the SPCTF White Paper. The interval chosen for the standard, by mandate, has to be an absolute measurable limit thus no "grace periods" are allowed within the standard itself. For scheduling management, unforeseen events, natural disasters and no grace periods a final interval of 6 calendar years was chosen. 6 years also works well as a base interval when coordinating with any individual registered generator as there may be generator outage schedules that approach but do not exceed 6 years. Any relay scheme that exists within a generator should then be able to be tested with the outage schedule.

The activities prescribed for non-microprocessor based relays are, essentially, calibrating which is a common practice of protective relay owners.

The activities prescribed for unmonitored microprocessor relays are a verification of settings and verify the inputs and outputs of the relays; note that the settings verification of legacy relays is inherent in the calibration activity.

Component Attributes:
Monitored microprocessor protective relay with the following:

- Internal self-diagnosis and alarming (see Table 2).
- Voltage and/or current waveform sampling three or more times per power cycle, and conversion of samples to numeric values for measurement calculations by microprocessor electronics.
- Alarming for power supply failure (see Table 2).

Maximum Maintenance Interval: 12 calendar years
Maintenance Activity: *Verify:*

- *Settings are as specified.*
- *Operation of the relay inputs and outputs that are essential to proper functioning of the Protection System.*
- *Acceptable measurement of power system input values.*

Relay equipment with these attributes provides condition-based maintenance on many of the sections of the device. The 12 calendar year activities are to ensure that the device conveys the alarm from its origin to the location where corrective action can be initiated; that the power system input values are correctly measured by the relay and that the needed inputs and outputs are still functional. The maintenance activities are focused on the necessary tests that are not otherwise covered with internal self-diagnostics. Aside from the components that do not have internal self-diagnostics, this technology utilizes condition based maintenance (CBM) principles on many of its components. CBM maximizes testing, maximizes complete Protection System integrity and minimizes outages caused by human performance errors.

Component Attributes:
Monitored microprocessor protective relay with preceding row attributes and the following:

- Ac measurements are continuously verified by comparison to an independent ac measurement source, with alarming for excessive error (See Table 2).
- Some or all binary or status inputs and control outputs are monitored by a process that continuously demonstrates ability to perform as designed, with alarming for failure (See Table 2).
- Alarming for change of settings (See Table 2).

Maximum Maintenance Interval: 12 calendar years
Maintenance Activity: *Verify only the unmonitored relay inputs and outputs that are essential to proper functioning of the Protection System.*

This Maintenance Activity includes verification that the device conveys the alarm from its origin to the location where corrective action can be initiated. This equipment is configured to verify the sections of the relay that measure the power system values. This equipment routinely verifies all equipment through CBM except the inputs and outputs.

Table 1-2 (Communications Systems)

Component Attributes:
Any unmonitored communications system necessary for correct operation of protective functions, and not having all the monitoring attributes of a category below.

Maximum Maintenance Interval: 4 calendar months
Maintenance Activity: *Verify that the communications system is functional.*

The interval of 4 calendar months was determined from the need for routine station visits (in the absence of monitoring). The interval, by mandate, has to be an absolute measurable limit thus no "grace periods" are allowed within the standard itself. In the standards development process, it was determined that quarterly intervals for station visits were the predominant practice. To allow for flexibility of scheduling, unforeseen events, natural disasters and no grace periods a final interval of 4 calendar months was chosen.

Maximum Maintenance Interval: 6 calendar years
Maintenance Activity *Verify*

- *That the communication system meets performance criteria pertinent to the communications technology applied (e.g. signal level, reflected power, or data error rate).*
- *Operation of communication system inputs and outputs that are essential to proper functioning of the Protection System.*

The 6 calendar year activities are a "Cal-Check" of the various systems (and repair as needed). This solid-state and/or microprocessor based equipment requires little or no maintenance. The maintenance activities require that the failure mode be checked on the equipment; this is stated in such a manner as to capture all varieties of equipment presently in use. While some equipment will require test equipment to manage the activities, other equipment can be routinely verified, without the traditional RF test equipment. With solid-state performance in Protection System equipment there is no indication by manufacturer or drafting team SME experience that shorter intervals (1-3 years) are required. The 6 year interval was determined from the need for routine performance testing (in the absence of monitoring). 5 years was chosen as a starting point to stay in line with similar technology in protective relays and the

starting point as outlined in the SPCTF White Paper. A noticeable inclusion is that the original SPCTF acknowledged that systems and emergent events routinely require that "grace periods" should be allowed. The interval chosen for the standard, by mandate, has to be an absolute measurable limit thus no "grace periods" are allowed within the standard itself. For scheduling management, unforeseen events, natural disasters and no grace periods a final interval of 6 calendar years was chosen. 6 years also works well as a base interval when coordinating with any individual registered generator as there may be generator outage schedules that approach but do not exceed 6 years. Any comm.-assisted trip scheme that exists within a generator should then be able to be tested with the outage schedule.

Component Attributes:
Any communications system with continuous monitoring or periodic automated testing for the presence of the channel function, and alarming for loss of function (See Table 2).

Maximum Maintenance Interval: 12 calendar years
Maintenance Activity: *Verify*

- *That the communication system meets performance criteria pertinent to the communications technology applied (e.g. signal level, reflected power, or data error rate).*
- *Operation of communication system inputs and outputs that are essential to proper functioning of the Protection System.*

The 12 calendar year activity is to ensure that the monitoring device conveys the alarm from its origin to the location where corrective action can be initiated. Since this technology is the same technology utilized for microprocessor based relays, then all of the efficiencies realized apply to this equipment as well. CBM maximizes testing, maximizes complete Protection System integrity and minimizes outages caused by human performance errors.

Component Attributes:
Any communications system with all of the following:

- Continuous monitoring or periodic automated testing for the performance of the channel using criteria pertinent to the communications technology applied (e.g. signal level, reflected power, or data error rate, and alarming for excessive performance degradation). (See Table 2)
- Some or all binary or status inputs and control outputs are monitored by a process that continuously demonstrates ability to perform as designed, with alarming for failure (See Table 2).

Maximum Maintenance Interval: 12 calendar years
Maintenance Activity: *Verify only the unmonitored communications system inputs and outputs that are essential to proper functioning of the Protection System*

The 12 calendar year activity is to ensure that the monitoring device conveys the alarm from its origin to the location where corrective action can be initiated. Since this technology is the same technology utilized for microprocessor based relays, then all of the efficiencies realized apply to this equipment as

well. CBM maximizes testing, maximizes complete Protection System integrity and minimizes outages caused by human performance errors.

Table 1-3 (Voltage and Current Sensing Devices)

Component Attributes:
Any voltage and current sensing devices not having monitoring attributes of the category below.

Maximum Maintenance Interval: 12 calendar years
Maintenance Activity: *Verify that current and voltage signal values are provided to the protective relays.*

The 12 calendar year activities are measurement activities (and repair as needed) and in many cases can be eliminated by advanced comparison techniques, software and communications.
The time interval is chosen specifically to coincide with every other test of an unmonitored relay and every test of a monitored relay.

The activity specified implicitly verifies more than voltages, currents and ratios as there is more to the circuit than just the instrument transformer (or other voltage and current sensing device). The expected product life cycle of wound voltage and current transformers is known to be far in excess of 40 years, well above the specified time interval. The verification of the values provided to the protective relays also brings wiring into the verification process. While there are product degradation failure modes that occur in cabling and wiring, it is a well-known phenomenon that most cable degradation occurs because of high voltage stress. High voltage-stressed, direct-buried cable is typically expected to last at least 15 years. The cables and wires used in these Protection System applications are not stressed with high voltage. Following prudent installation techniques, associated protection system cabling and wiring life expectancy is known to be far in excess of 40-50 years.

The activity performed at every-other unmonitored relay calibration is intended to recur much more often than any predicted cable degradation problem while at the same time this interval will minimize human interaction with the voltage and current sources. The history of Protection System maintenance has found that minimizing human interaction will minimize mistakes that manifest themselves as inadvertent trips and otherwise broken equipment. Shock hazards from voltage and current sources are a large concern of the industry and are also minimized with the purposeful approach used with the applied maximum time interval between breaking into the voltage and current paths.

The activity, when used with a monitored relay test, can be extremely useful in a rapid diagnosis of the complete Protection System package. A state of the art microprocessor relay can produce an output of the status of the relay, the battery bank float voltage, the continuity of the trip path through the trip coil, the status of any connected comm.-assisted trip equipment and a display of the values of voltage and current provided to the relay.

A properly applied microprocessor relay within a substation might have a display of volts, amps, phase angles, Watts, VARs, Volt-Amps as well as other programmed output values. All of the programmed output values can be utilized as possible troubleshooting tools.

As the industry is moving towards a BES with a very high percentage of microprocessor relays this advanced functionality will be widespread.

The maximum time interval requirement of PRC-005-2 is measurable because there are no grace periods allowed. It becomes a de-facto time interval of less than 12 years simply because an entity will have to guarantee that the 12 years is not exceeded. Therefore the activity will be scheduled and completed before the time interval has run its course.

Thus the time interval works well with the base of 6 years; the work can be coordinated with typical generator outage schedules; it is less than the expected product degradation of the devices encompassed within the activity; it reduces human interaction which can negatively affect reliability through conductor manipulation, and the time interval has been set at a level that will still allow scheduling management even in the event of such things as natural disasters that can take substantial resources (and time) from which to recover.

Component Attribute:
Voltage and Current Sensing devices connected to microprocessor relays with AC measurements are continuously verified by comparison of sensing input value as measured by the microprocessor relay to an independent ac measurement source, with alarming for unacceptable error or failure.

Maximum Maintenance Interval: No periodic maintenance specified
Maintenance Activity: *None*

This activity and time interval are specified only in the event that an automated system has been instituted; furthermore that system must be able to alarm if the “alarming” system failed (fail-safe). There are “check-sum” systems available and already operational in the field. These systems, when coupled with comparison software, calculations or algorithms can perform all of the comparison techniques outlined previously and alarm when a circuit falls out of tolerance. Since such comparisons are automated, the calculations can occur many times per minute. Therefore, as with any “condition-based” system, there is actually far more maintenance activities being performed in any given day than typically performed in a time-based program. The circuit is more secure and there is never a need for human interaction until the alarm comes in; at which time repairs can be initiated – further reducing human interaction which can negatively affect reliability through conductor manipulation.

Table 1-4(a) (VLA Batteries)

Component Attribute:
Protection System Station dc supply using Vented Lead-Acid (VLA) batteries not having monitoring attributes of Table 1-4(f) (Table 1-4(a)).

Maximum Maintenance Interval: 4 calendar months
Maintenance Activity: *Verify*

- *Station dc supply voltage*

Inspect

- *Electrolyte level*
- *For unintentional grounds*

The interval of 4 calendar months was determined from the need for routine station visits (in the absence of monitoring). The interval, by mandate, has to be an absolute measurable limit thus no "grace periods" are allowed within the standard itself. In the standards development process, it was determined that quarterly intervals for station visits were the predominant practice for these maintenance activities. To allow for flexibility of scheduling, unforeseen events, natural disasters and no grace periods a final interval of 4 calendar months was chosen.

Maximum Maintenance Interval: 18 Calendar Months
Maintenance Activity: *Verify*

- *Float voltage of battery charger.*
- *Battery continuity.*
- *Battery terminal connection resistance.*
- *Battery intercell or unit-to-unit connection resistance.*
- *That the station battery can perform as manufactured by evaluating cell/unit measurements indicative of battery performance (e.g. internal ohmic values or float current) against the station battery baseline.*

Inspect

- *Cell condition of all individual battery cells where cells are visible – or measure battery cell/unit internal ohmic values where the cells are not visible.*
- *Physical condition of battery rack.*

The interval of 18 calendar months was determined from the need for scheduled annual station visits for VLA battery maintenance (in the absence of monitoring). The interval, by mandate, has to be an absolute measurable limit thus no "grace periods" are allowed within the standard itself.

These "annual" inspections and verifications are listed in the IEEE recommended practice for VLA batteries (IEEE 450). To allow for flexibility of scheduling, unforeseen events, natural disasters and no grace periods a final interval of 18 calendar months was chosen.

Maximum Maintenance Interval: 6 calendar years
Maintenance Activity: *Verify that the station battery can perform as manufactured by conducting a performance or modified performance capacity test of the entire battery bank.*

The interval of 6 calendar years was determined from the need for scheduled performance or modified performance capacity testing at 25% of the expected battery life listed in the IEEE recommended practice for VLA batteries (IEEE 450). 5 years is the predominant industry interval for this practice. The interval, by mandate, has to be an absolute measurable limit thus no "grace periods" are allowed within the standard itself. To allow for flexibility of scheduling, unforeseen events, natural disasters and no grace periods a final interval of 6 calendar years was chosen.

Table 1-4(b) (VRLA Batteries)

Component Attribute:
Protection System Station dc supply with Valve Regulated Lead-Acid (VRLA) batteries not having monitoring attributes of Table 1-4(f).

Maximum Maintenance Interval: 4 calendar months
Maintenance Activity: *Verify*

- *Station dc supply voltage*

Inspect

- *For unintentional grounds*

The interval of 4 calendar months was determined from the need for routine station visits (in the absence of monitoring). The interval, by mandate, has to be an absolute measurable limit thus no "grace periods" are allowed within the standard itself. In the standards development process, it was determined that quarterly intervals for station visits were the predominant practice for these maintenance activities. To allow for flexibility of scheduling, unforeseen events, natural disasters and no grace periods a final interval of 4 calendar months was chosen.

Maximum Maintenance Interval: 6 calendar months
Maintenance Activity: *Inspect*

- *Condition of all individual units by measuring battery cell/unit internal ohmic values.*

Verify

- *That the station battery can perform as manufactured by evaluating cell/unit measurements indicative of battery performance (e.g. internal ohmic values or float current) against the station battery baseline*

The interval of 6 calendar months was determined from the need for scheduled quarterly station visits for VRLA battery maintenance (in the absence of monitoring). The interval, by mandate, has to be an absolute measurable limit thus no "grace periods" are allowed within the standard itself. This "quarterly" inspection and verification is listed in the IEEE recommended practice for VRLA batteries (IEEE 1188). To allow for flexibility of scheduling, unforeseen events, natural disasters and no grace periods a final interval of 6 calendar months was chosen.

Maximum Maintenance Interval: 18 calendar months
Maintenance Activity: *Verify*

- *Float voltage of battery charger.*
- *Verify Battery continuity.*
- *Verify Battery terminal connection resistance.*
- *Verify Battery intercell or unit-to-unit connection resistance.*

Inspect

- *Physical condition of battery rack.*

The interval of 18 calendar months was determined from the need for scheduled annual station visits for VRLA battery maintenance (in the absence of monitoring). The interval, by mandate, has to be an absolute measurable limit thus no "grace periods" are allowed within the standard itself.

These "annual" inspections and verifications are listed in the IEEE recommended practice for VRLA batteries (IEEE 1188). To allow for flexibility of scheduling, unforeseen events, natural disasters and no grace periods a final interval of 18 calendar months was chosen.

Maximum Maintenance Interval: 3 calendar years
Maintenance Activity: *Verify that the station battery can perform as manufactured by conducting a performance or modified performance capacity test of the entire battery bank.*

The interval of 3 calendar years was determined from the need for the "two years" performance or modified performance capacity testing schedule listed in the IEEE recommended practice for VRLA batteries (IEEE 1188). The interval, by mandate, has to be an absolute measurable limit thus no "grace periods" are allowed within the standard itself. To allow for flexibility of scheduling, unforeseen events, natural disasters and no grace periods a final interval of 3 calendar years was chosen.

Table 1-4(c) (NiCad Batteries)

Component Attribute:
Protection System Station dc supply Nickel-Cadmium (NiCad) batteries not having monitoring attributes of Table 1-4(f) (Table 1-4(c)).

Maximum Maintenance Interval: 4 calendar months
Maintenance Activity: *Verify*

- *Station dc supply voltage*

Inspect

- *Electrolyte level*
- *For unintentional grounds*

The interval of 4 calendar months was determined from the need for routine station visits (in the absence of monitoring). The interval, by mandate, has to be an absolute measurable limit thus no "grace periods" are allowed within the standard itself. In the standards development process, it was determined that quarterly intervals for station visits were the predominant practice for these maintenance activities. To allow for flexibility of scheduling, unforeseen events, natural disasters and no grace periods a final interval of 4 calendar months was chosen.

Maximum Maintenance Interval: 18 calendar months
Maintenance Activity: *Verify*

- *Float voltage of battery charger.*
- *Battery continuity.*
- *Battery terminal connection resistance.*
- *Battery intercell or unit-to-unit connection resistance.*

Inspect

- *Cell condition of all individual battery cells.*
- *Inspect Physical condition of battery rack.*

The interval of 18 calendar months was determined from the need for scheduled annual station visits for NiCad battery maintenance (in the absence of monitoring). The interval, by mandate, has to be an absolute measurable limit thus no "grace periods" are allowed within the standard itself. These "annual" inspections and verifications are listed in the IEEE recommended practice for NiCad batteries (IEEE 1106).

To allow for flexibility of scheduling, unforeseen events, natural disasters and no grace periods a final interval of 18 calendar months was chosen.

Maximum Maintenance Interval: 6 calendar years
Maintenance Activity: *Verify that the station battery can perform as manufactured by conducting a performance or modified performance capacity test of the entire battery bank.*

The interval of 6 calendar years was determined from the need for the "five-year" performance or modified performance capacity testing schedule listed in the IEEE recommended practice for NiCad batteries (IEEE 1106). The interval, by mandate, has to be an absolute measurable limit thus no "grace periods" are allowed within the standard itself. To allow for flexibility of scheduling, unforeseen events, natural disasters and no grace periods a final interval of 6 calendar years was chosen.

Table 1-4(d) (Non Battery Based Energy Storage)

Component Attribute:
Any Protection System station dc supply not using a battery and not having monitoring attributes of Table 1-4(f).

Maximum Maintenance Interval: 4 calendar months
Maintenance Activity: *Verify*

- *Station dc supply voltage*

Inspect

- *For unintentional grounds*

The interval of 4 calendar months was determined from the need for routine station visits (in the absence of monitoring). The interval, by mandate, has to be an absolute measurable limit thus no "grace periods" are allowed within the standard itself. In the standards development process, it was determined that quarterly intervals for station visits were the predominant practice for these maintenance activities. To allow for flexibility of scheduling, unforeseen events, natural disasters and no grace periods a final interval of 4 calendar months was chosen.

Maximum Maintenance Interval: 18 calendar months
Maintenance Activity: *Inspect condition of non-battery based dc supply.*

The interval of 18 calendar months was determined from the need for a scheduled annual station visits to determine the condition of the non-battery based energy storage device used in the station dc supply (in the absence of monitoring). The interval, by mandate, has to be an absolute measurable limit thus no "grace periods" are allowed within the standard itself. To allow for flexibility of scheduling, unforeseen events, natural disasters and no grace periods a final interval of 18 calendar months was chosen.

Maximum Maintenance Interval: 6 calendar years
Maintenance Activity: *Verify that the dc supply can perform as manufactured when ac power is not present.*

The interval of 6 calendar years was determined from the need for a scheduled maintenance interval of the stored energy part of a dc supply that does not use a battery. A 5 year interval was suggested by industry to match the VLA battery interval. The interval, by mandate, has to be an absolute measurable limit thus no "grace periods" are allowed within the standard itself. To allow for flexibility of scheduling, unforeseen events, natural disasters and no grace periods a final interval of 6 calendar years was chosen.

Table 1-4(e) (SPS, UFLS and UVLS Batteries for non-BES Interrupting Devices)

Component Attribute:
Any Protection System dc supply used for tripping only non-BES interrupting devices as part of a SPS, non-distributed UFLS, or non-distributed UVLS system and not having monitoring attributes of Table 1-4(f).

Maximum Maintenance Interval: When control circuits are verified (See Table 1-5)
Maintenance Activity: *Verify Station dc supply voltage.*

The maintenance interval for this maintenance activity (verifying that there is dc supply voltage) is due to the distributed nature of these components and has also been chosen specifically to coincide with maintenance activities 12 calendar years maximum maintenance interval for monitored microprocessor protective relays, voltage and/or current sensing devices, control circuitry, and electromechanical lockout and/or tripping auxiliary devices listed in table 3 (Maintenance Activities and Intervals for distributed UFLS and distributed UVLS Systems). Failure of a single component does not have significant impact to the BES to warrant further maintenance activities for the dc supply. These components are routinely operated in normal operations and maintenance activities for distribution systems and as such it is only required to verify that voltage is present when the control circuits are verified.

Table 1-4(f) (Exclusions for Protection System station dc supply monitoring devices and systems)

Table 1-4(f) was created by the drafting team to allow Protection System dc supply owners to obtain exclusions from periodic maintenance activities by using monitoring devices. The basis of the exclusions granted in the table is that the monitoring devices must incorporate the monitoring capability of microprocessor based components which perform continuous self-monitoring. For failure of the microprocessor device used in dc supply monitoring, the self checking routine in the microprocessor must generate an alarm which will be reported within 24 hours of device failure to a location where corrective action can be initiated.

Table 1-4(f) lists 8 component attributes along with a specific periodic maintenance activity associated with each of the 8 attributes listed. If an owner of a station dc supply wants to be excluded from periodically performing one of the 8 maintenance activities listed in table 1-4(f), the owner must have evidence that the monitoring and alarming component attributes associated with the excluded maintenance activity are met by the self checking microprocessor based device with the specific component attribute listed in the table 1-4(f).

By taking advantage of the exclusions offered in table 1-4(f) a Protection System owner can establish a proactive condition-based maintenance (CBM) program for most of the maintenance activities listed for station batteries and chargers used in his Protection System dc supplies.

Table 1-5 (Control Circuitry Associated With Protective Functions)

Component Attribute:
Trip coils or actuators of circuit breakers, interrupting devices, or mitigating devices (regardless of any monitoring of the control circuitry)

Maximum Maintenance Interval: 6 calendar years
Maintenance Activity: *Verify that each trip coil is able to operate the circuit breaker, interrupting device, or mitigating device.*

The interval of 6 calendar years to determine that each trip coil can operate the circuit breaker, interrupting device or mitigating device is based on the requirement to electrically operate the mechanism. This requirement is in place because some of these devices share attributes and failure modes of electromechanical relays. Many mechanical devices sometimes need to be exercised to ensure that the mechanism will be ready when called upon to operate. Industry anecdotal evidence has demonstrated that, even though some manufacturers' products have very low failure rates, there are others still in use that have known failure modes and are sometimes involved in notable failure events. Until such time as the poor quality, legacy equipment is gone from the installed Protection Systems, it is believed there will continue to be failure of some of these products.

This 6 calendar years time interval was chosen to be at the base interval with the unmonitored relays, includes sufficient time within the interval to account for scheduling management needs, but has no allowed grace period and is therefore measurable.

Component Attribute:
Electromechanical lockout devices which are directly in a trip path from the protective relay to the interrupting device trip coil (regardless of any monitoring of the control circuitry).

Maximum Maintenance Interval: 6 calendar years
Maintenance Activity: *Verify electrical operation of electromechanical lockout devices.*

The interval of 6 calendar years to determine electrical operation of electromechanical lockout devices is based on the requirement to electrically operate the mechanism. This requirement is in place because some of these devices share attributes and failure modes of electromechanical relays. Many mechanical devices sometimes need to be exercised to ensure that the mechanism will be ready when called upon to operate. Industry anecdotal evidence has demonstrated that, even though some manufacturers' products have very low failure rates, there are others still in use that have known failure modes and are sometimes involved in notable failure events. Until such time as the poor quality, legacy equipment is

gone from the installed Protection Systems, it is believed there will continue to be failure of some of these products.

This 6 calendar years time interval was chosen to be at the base interval with the unmonitored relays, includes sufficient time within the interval to account for scheduling management needs, but has no allowed grace period and is therefore measurable.

Component Attribute:
Unmonitored control circuitry associated with SPS.

Maximum Maintenance Interval: 12 calendar years
Maintenance Activity *Verify all paths of the control circuits essential for proper operation of the SPS.*

The interval of 12 calendar years to confirm all paths of control circuits essential for operation of a SPS is based on the assertion that while there are product degradation failure modes that occur in control cabling and panel and circuit breaker wiring, it is a well-known phenomenon that most cable degradation occurs because of high voltage stress. High voltage-stressed, direct-buried cable is typically expected to last at least 15 years. The cables and wires used in these Protection System applications are not stressed with high voltage. Following prudent installation techniques, associated protection system cabling and wiring life expectancy is known to be far in excess of 40-50 years. The activity performed at every-other unmonitored relay calibration is intended to recur much more often than any predicted panel wiring and control cable degradation problem while at the same time minimize human interaction with the trip voltages present. The history of Protection System maintenance has found that minimizing human interaction will minimize mistakes that manifest themselves as inadvertent trips and otherwise broken equipment. In many cases circuits can be removed from service to minimize technician-caused real-time system trips. However, there are many cases where required testing on circuitry must take place on circuits that cannot be removed from service; one case in point is a line stays in service but only one circuit breaker of two on a ring can be taken out for testing. Many of the trip circuits remain active even as a technician conducts the required testing. Additionally almost all aspects of Protection System control circuitry is continuously monitored by the connected battery charger. Abnormal control circuitry condition can be indentified through battery maintenance monitoring activities or alarming features incorporated in battery chargers.

A balance must be reached between making tests upon circuitry to make a reliable system and testing so often that technician-caused trips make the system unreliable. The drafting team believes that such a balance can be found at this time interval, although there remain some that are concerned that auxiliary tripping relays and lock-out relays may still be actuated too often (for tests) for the overall security of the BES.

Auxiliary control relays that are not lock-out relays usually have less impact to the system for failure to trip than a lock-out relay. Aux-relays are simpler in construction and share fewer failure modes than a

legacy lock-out relay. The way that auxiliary control relays are typically wired into circuitry would, in many cases, require de-terminating wires which increases the risk of human performance errors.
This 12 calendar years time interval includes sufficient time within the interval to account for scheduling management needs beyond potential unforeseen events, but has no allowed grace period and is therefore measurable. This time interval fits well with any known typical registered generation outage schedule.

Component Attribute:
Unmonitored control circuitry associated with protective functions inclusive of all auxiliary relays.

Maximum Maintenance Interval: 12 calendar years
Maintenance Activity: *Verify all paths of the trip circuits inclusive of all auxiliary relays through the trip coil(s) of the circuit breakers or other interrupting devices.*

The interval of 12 calendar years to authenticate all paths of the trip circuits (including all auxiliary relays) is based on the premise that while there are product degradation failure modes that occur in control cabling and panel and circuit breaker wiring, it is a well-known phenomenon that most cable degradation occurs because of high voltage stress. High voltage-stressed, direct-buried cable is typically expected to last at least 15 years. The cables and wires used in these Protection System applications are not stressed with high voltage. Following prudent installation techniques, associated protection system cabling and wiring life expectancy is known to be far in excess of 40-50 years. The activity performed at every-other unmonitored relay calibration is intended to recur much more often than any predicted panel wiring and control cable degradation problem while at the same time minimize human interaction with the trip voltages present. The history of Protection System maintenance has found that minimizing human interaction will minimize mistakes that manifest themselves as inadvertent trips and otherwise broken equipment. In many cases circuits can be removed from service to minimize technician-caused real-time system trips. However, there are many cases where required testing on circuitry must take place on circuits that cannot be removed from service; one case in point is a line stays in service but only one circuit breaker of two on a ring can be taken out for testing. Many of the trip circuits remain active even as a technician conducts the required testing. Additionally almost all aspects of Protection System control circuitry is continuously monitored by the connected battery charger. Abnormal control circuitry condition can be indentified through battery maintenance monitoring activities or alarming features incorporated in battery chargers.

A balance must be reached between making tests upon circuitry to make a reliable system and testing so often that technician-caused trips make the system unreliable. The drafting team believes that such a balance can be found at this time interval, although there remain some that are concerned that auxiliary tripping relays and lock-out relays may still be actuated too often (for tests) for the overall security of the BES.

Auxiliary control relays that are not lock-out relays usually have less impact to the system for failure to trip than a lock-out relay. Aux-relays are simpler in construction and share fewer failure modes than a legacy lock-out relay. The way that auxiliary control relays are typically wired into circuitry would, in many cases, require de-terminating wires which increases the risk of human performance errors.

This 12 calendar years time interval includes sufficient time within the interval to account for scheduling management needs beyond potential unforeseen events, but has no allowed grace period and is therefore measurable. This time interval fits well with any known typical registered generation outage schedule.

Component Attribute:
Control circuitry associated with protective functions and/or SPS whose integrity is monitored and alarmed (See Table 2).

Maximum Maintenance Interval: No periodic maintenance specified
Maintenance Activity: *None.*

This activity is one that is simply monitoring the control circuitry that otherwise puts the BES at risk with human interaction and inadvertent trips during the manual activity process. When the circuitry is continuously monitored, the monitoring devices produce results comparable to hours of manual testing without exposing the BES to an increased risk of human performance error and minimizing personnel safety risks to various arc-flash hazards. Continuous monitoring of equipment results in an alarm as soon as problems occur. Condition-based monitoring maximizes testing, maximizes complete Protection System integrity and minimizes outages caused by human performance errors.

Table 2 (Alarming Paths and Monitoring)

Component Attribute:
Any alarm path through which alarms in Tables 1-1 through 1-5 and Table 3 are conveyed from the alarm origin to the location where corrective action can be initiated, and not having all the attributes of the "Alarm Path with monitoring" category below.
Alarms are reported within 24 hours of detection to a location where corrective action can be initiated.

Maximum Maintenance Interval: 12 calendar years
Maintenance Activity: *Verify that the alarm path conveys alarm signals to a location where corrective action can be initiated.*

The 12 calendar year activity is to ensure that the monitoring device conveys the alarm from its origin to the location where corrective action can be initiated. The time interval is chosen specifically to coincide with every test of a monitored relay, communication system with monitoring or periodic automated testing, voltage and current sensing devices, and unmonitored control circuitry.

Component Attribute:
Alarm Path with monitoring:
The location where corrective action is taken receives an alarm within 24 hours for failure of any portion of the alarming path from the alarm origin to the location where corrective action can be initiated.

Maximum Maintenance Interval: No periodic maintenance specified
Maintenance Activity: *None.*

No periodic maintenance is required because the communication path from the monitoring device to the location where corrective action is initiated is monitored by a microprocessor system that is self-checking and annunciates whenever any portion of the communication path is not working or encounters problems. Since this technology is the same technology utilized for microprocessor based relays, then all of the efficiencies realized apply to this equipment as well. CBM maximizes testing of the alarm path, maximizes complete Protection System integrity and minimizes outages caused by human performance errors.

Table 3 (Maintenance Activities and Intervals for distributed UFLS and distributed UVLS Systems)

Component Attribute:
Any unmonitored protective relay not having all the monitoring attributes of a category below.

Maximum Maintenance Interval: 6 calendar years
Maintenance Activity: *Verify that settings are as specified*

For non-microprocessor relays:

- *Test and, if necessary calibrate*

For microprocessor relays:

- *Verify operation of the relay inputs and outputs that are essential to proper functioning of the Protection System. Verify acceptable measurement of power system input values.*

The 6 calendar year activities are a "Cal-Check" of the various legacy or unmonitored microprocessor-based relays (and repair as needed). The microprocessor based equipment requires little or no maintenance. The maintenance activities require that the failure modes be checked on the equipment; this is stated in such a manner as to capture all varieties of equipment presently in use. While some equipment will require test equipment to manage the activities, other equipment can be routinely verified, without the traditional relay testing equipment. The 6 year interval was determined from the need for routine performance testing (in the absence of monitoring). 5 years was chosen as a starting point as outlined in the SPCTF White Paper. The interval chosen for the standard, by mandate, has to be an absolute measurable limit thus no "grace periods" are allowed within the standard itself. For scheduling management, unforeseen events, natural disasters and no grace periods a final interval of 6 calendar years was chosen. 6 years also works well as a base interval when coordinating with any

individual registered generator as there may be generator outage schedules that approach but do not exceed 6 years.

Component Attribute:
Monitored microprocessor protective relay with the following:

- Internal self diagnosis and alarming (See Table 2).
- Voltage and/or current waveform sampling three or more times per power cycle, and conversion of samples to numeric values for measurement calculations by microprocessor electronics.
- Alarming for power supply failure (See Table 2).

Maximum Maintenance Interval: 12 calendar years
Maintenance Activity: *Verify:*

- *Settings are as specified.*
- *Operation of the relay inputs and outputs that are essential to proper functioning of the Protection System.*
- *Acceptable measurement of power system input values*

Relay equipment with these attributes provides condition-based maintenance on many of the sections of the device. The 12 calendar year activities are to ensure that the device conveys the alarm from its origin to the location where corrective action can be initiated; that the power system input values are correctly measured by the relay and that the needed inputs and outputs are still functional. The maintenance activities are focused on the necessary tests that are not otherwise covered with internal self-diagnostics. Aside from the components that do not have internal self-diagnostics, this technology utilizes condition based maintenance (CBM) principles on many of its components. CBM maximizes testing, maximizes complete Protection System integrity and minimizes outages caused by human performance errors.

Component Attribute:
Monitored microprocessor protective relay with preceding row attributes and the following:

- Ac measurements are continuously verified by comparison to an independent ac measurement source, with alarming for excessive error (See Table 2).
- Some or all binary or status inputs and control outputs are monitored by a process that continuously demonstrates ability to perform as designed, with alarming for failure (See Table 2).
- Alarming for change of settings (See Table 2).

Maximum Maintenance Interval: 12 calendar years
Maintenance Activity: *Verify only the unmonitored relay inputs and outputs that are essential to proper functioning of the Protection System.*

This Maintenance Activity includes verification that the device conveys the alarm from its origin to the location where corrective action can be initiated. This equipment is configured to verify the sections of the relay that measure the power system values. This equipment routinely verifies all equipment through CBM except the inputs and outputs.

Component Attribute:
Voltage and/or current sensing devices associated with UFLS or UVLS systems.

Maximum Maintenance Interval: 12 calendar years
Maintenance Activity: *Verify that current and/or voltage signal values are provided to the protective relays.*

The 12 calendar year activities are measurement activities (and repair as needed) and in many cases can be eliminated by advanced comparison techniques, software and communications.

The time interval is chosen specifically to coincide with every other test of an unmonitored relay and every test of a monitored relay.

The activity specified implicitly verifies more than voltages, currents and ratios as there is more to the circuit than just the instrument transformer (or other voltage and current sensing device). The expected product life cycle of wound voltage and current transformers is known to be far in excess of 40 years, well above the specified time interval. The verification of the values provided to the protective relays also brings wiring into the verification process. While there are product degradation failure modes that occur in cabling and wiring, it is a well-known phenomenon that most cable degradation occurs because of high voltage stress. High voltage-stressed, direct-buried cable is typically expected to last at least 15 years. The cables and wires used in these Protection System applications are not stressed with high voltage. Following prudent installation techniques, associated protection system cabling and wiring life expectancy is known to be far in excess of 40-50 years.

The activity performed at every-other unmonitored relay calibration is intended to recur much more often than any predicted cable degradation problem while at the same time this interval will minimize human interaction with the voltage and current sources. The history of Protection System maintenance has found that minimizing human interaction will minimize mistakes that manifest themselves as inadvertent trips and otherwise broken equipment. Shock hazards from voltage and current sources are a large concern of the industry and are also minimized with the purposeful approach used with the applied maximum time interval between breaking into the voltage and current paths.

The activity, when used with a monitored relay test, can be extremely useful in a rapid diagnosis of the complete Protection System package. A state of the art microprocessor relay can produce an output of the status of the relay, the battery bank float voltage, the continuity of the trip path through the trip coil,

the status of any connected comm.-assisted trip equipment and a display of the values of voltage and current provided to the relay.

A properly applied microprocessor relay within a substation might have a display of volts, amps, phase angles, Watts, VARs, Volt-Amps as well as other programmed output values. All of the programmed output values can be utilized as possible troubleshooting tools.

As the industry is moving towards a BES with a very high percentage of microprocessor relays this advanced functionality will be widespread.

The maximum time interval requirement of PRC-005-2 is measurable because there are no grace periods allowed. It becomes a de-facto time interval of less than 12 years simply because an entity will have to guarantee that the 12 years is not exceeded. Therefore the activity will be scheduled and completed before the time interval has run its course.

Component Attribute:
Protection System dc supply for tripping non-BES interrupting devices used only for a UFLS or UVLS system

Maximum Maintenance Interval: 12 calendar years
Maintenance Activity: *Verify Protection System dc supply voltage.*

The maintenance activity for component attribute (verifying that there is dc supply voltage) is due to the distributed nature of these components. Failure of a single component does not have significant impact to the BES to warrant further maintenance activities for the dc supply. These components are routinely operated in normal operations and maintenance activities for distribution systems and as such it is only required to verify that voltage is present when the other maintenance activities for distributed UFLS and UVLS systems are conducted.

The 12 calendar interval for verifying dc supply voltage was chosen specifically to coincide with maintenance activities for monitored microprocessor protective relays, voltage and/or current sensing devices, control circuitry, and electromechanical lockout and/or tripping auxiliary devices.

Component Attribute:
Control circuitry between the UFLS or UVLS relays and electromechanical lockout and/or tripping auxiliary devices (excludes non-BES interrupting device trip coils).

Maximum Maintenance Interval: 12 calendar years
Maintenance Activity: *Verify the path from the relay to the lockout and/or tripping auxiliary relay (including essential supervisory logic).*

The interval of 12 calendar years to authenticate the path from the relay to the lockout and/or tripping auxiliary relay is based on the premise that while there are product degradation failure modes that occur in control cabling panel and circuit breaker wiring, it is a well-known phenomenon that most cable degradation occurs because of high voltage stress. High voltage-stressed, direct-buried cable is typically expected to last at least 15 years. However the 12 calendar interval was chosen to coincide specifically with activities for monitored microprocessor protective relays, voltage and/or current sensing devices, and Protection System dc supply for UFLS or UVLS systems.

Failure of a single component does not have significant impact to the BES to warrant further maintenance activities for the control circuitry between the UFLS or UVLS relays and the lockout or tripping auxiliary devices. These components are routinely operated in normal operations and maintenance activities for distribution systems and as such it is only required to verify the path from the UFLS or UVLS relay to the lockout or tripping auxiliary relay.

Component Attribute:
Electromechanical lockout and/or tripping auxiliary devices associated only with UFLS or UVLS systems (excludes non-BES interrupting device trip coils).

Maximum Maintenance Interval: 12 calendar years
Maintenance Activity: *Verify electrical operation of electromechanical lockout and/or tripping auxiliary devices.*

Because failure of a single electromechanical lockout and/or tripping auxiliary device component used in UFLS or UVLS system does not have significant impact to the BES to warrant the shorter 6 calendar maintenance interval as other Protection Systems, the 12 calendar interval was chosen. Also the 12 calendar interval to verify operation of electromechanical lockout and/or tripping auxiliary devices was chosen to coincide specifically with activities for monitored microprocessor protective relays, voltage and/or current sensing devices, Protection System dc supply and control circuitry for UFLS or UVLS systems.

Component Attribute:
Control circuitry between the electromechanical lockout and/or tripping auxiliary devices and the non-BES interrupting devices in UFLS or UVLS systems, or between UFLS or UVLS relays (with no interposing electromechanical lockout or auxiliary device) and the non-BES interrupting devices (excludes non-BES interrupting device trip coils).

Maximum Maintenance Interval: No periodic maintenance specified
Maintenance Activity: *None*

No periodic maintenance interval or maintenance activity is required for this UFLS or UVLS distributed system. Failure of a single control circuit with the component attribute stated above does not have significant impact to the BES to warrant a maintenance activity at a maximum maintenance interval.

Component Attribute:
Trip coils of non-BES interrupting devices in UFLS or UVLS systems

Maximum Maintenance Interval: No periodic maintenance specified
Maintenance Activity: *None*

No periodic maintenance interval or maintenance activity is required for trip coils of non-BES interrupting devices in UFLS or UVLS systems because failure of a single trip coil does not have a significant impact to the BES and these components are routinely operated in normal operations and maintenance activities for distribution systems that the UFLS or UVLS protective relays actuate.

Exhibit G

Mapping Document

NERC
NORTH AMERICAN ELECTRIC RELIABILITY CORPORATION

Project 2007-17 Protection System Maintenance and Testing Mapping Document

Mapping Document Showing Translation of PRC-005-1b – Transmission and Generation Protection System Maintenance and Testing, PRC-008-0- Implementation and Documentation of Underfrequency Load Shedding Equipment Maintenance Program, PRC-011-0 – Undervoltage Load Shedding System Maintenance and Testing, and PRC-017-0 - Special Protection System Maintenance and Testing into PRC-005-2 – Protection System Maintenance.

Standard: PRC-005-1b - Transmission and Generation Protection System Maintenance and Testing		
Requirement in Approved Standard	**Translation to New Standard or Other Action**	**Proposed Language in PRC-005-2 – Protection System Maintenance Or Comment**
R1. Each Transmission Owner and any Distribution Provider that owns a transmission Protection System and each Generator Owner that owns a generation Protection System shall have Protection System maintenance and testing program for Protection Systems that affect the reliability of the BES. The program shall include: R1.1. Maintenance and testing intervals and their basis. R1.2. Summary of maintenance and testing procedures.	PRC-005-2, R1 and PRC-005-2, R2 PRC-005-2, Tables 1-1 through 1-5, Table 2, and Table 3.	R1. Each Transmission Owner, Generator Owner, and Distribution Provider shall establish a Protection System Maintenance Program (PSMP) for its Protection Systems identified in Section 4.2. The PSMP shall: 1.1. Identify which maintenance method (time-based, performance-based per PRC-005 Attachment A, or a combination) is used to address each Protection System Component Type. All batteries associated with the station dc supply Component Type of a Protection System shall be included in a time-based program as described in Table 1-4 and Table 3. 1.2. Include the applicable monitored Component attributes applied to each Protection System Component Type consistent with the maintenance intervals specified in Tables 1-1 through 1-5, Table 2, and Table 3 where monitoring is used to extend the maintenance intervals beyond

Standard: PRC-005-1b - Transmission and Generation Protection System Maintenance and Testing		
Requirement in Approved Standard	**Translation to New Standard or Other Action**	**Proposed Language in PRC-005-2 – Protection System Maintenance Or Comment**
		those specified for unmonitored Protection System Components. R2. Each Transmission Owner, Generator Owner, and Distribution Provider that uses performance-based maintenance intervals in its PSMP shall follow the procedure established in PRC-005 Attachment A to establish and maintain its performance-based intervals. See PRC-005-2 Tables 1-1 through 1-5, Table 2, and Table 3. The Tables establish prescribed maximum intervals and minimum maintenance activities, and, as such, the entity no longer needs to establish the basis for their intervals.
R2. Each Transmission Owner and any Distribution Provider that owns a transmission Protection System and each Generator Owner that owns a generation Protection System shall provide documentation of its Protection System maintenance and testing program and the implementation of that program to its Regional Reliability Organization on request (within 30 calendar days). The documentation of the program implementation shall include: R2.1. Evidence Protection System devices were maintained and tested within	PRC-005-2, R3 PRC-005-2, R4, PRC-005-2, M3, PRC-005-2, M4 NERC Compliance Monitoring Enforcement Program Data Retention 1.3	R3. Each Transmission Owner, Generator Owner, and Distribution Provider that utilizes time-based maintenance programs shall maintain its Protection System Components that are included within the time-based maintenance program in accordance with the minimum maintenance activities and maximum maintenance intervals prescribed within Tables 1-1 through 1-5, Table 2, and Table 3. R4. Each Transmission Owner, Generator Owner, and Distribution Provider that utilizes performance-based maintenance programs in accordance with Requirement R2 shall implement and follow its PSMP for its Protection System Components that are included within the performance-based program. The legacy requirement that the entity provide the program results to the RRO and NERC on

Standard: PRC-005-1b - Transmission and Generation Protection System Maintenance and Testing		
Requirement in Approved Standard	**Translation to New Standard or Other Action**	**Proposed Language in PRC-005-2 – Protection System Maintenance Or Comment**
the defined intervals. R2.2. Date each Protection System device was last tested/maintained.		request is addressed in the NERC Compliance Monitoring Enforcement Program. M3. Each Transmission Owner, Generator Owner, and Distribution Provider that utilizes time-based maintenance programs shall have evidence that it has maintained its Protection System Components included within its time-based program in accordance with Requirement R3. The evidence may include but is not limited to dated maintenance records, dated maintenance summaries, dated check-off lists, dated inspection records, or dated work orders. M4. Each Transmission Owner, Generator Owner, and Distribution Provider that utilizes a performance-based maintenance program in accordance with Requirement R2 shall have evidence that it has implemented the Protection System Maintenance Program for the Protection System Components included in its performance-based program in accordance with Requirement R4. The evidence may include but is not limited to dated maintenance records, dated maintenance summaries, dated check-off lists, dated inspection records, or dated work orders. 1.3 Data Retention For Requirement R2, Requirement R3, Requirement R4, and Requirement R5, the Transmission Owner, Generator Owner, and Distribution Provider shall each keep documentation of the two most recent

Standard: PRC-005-1b - Transmission and Generation Protection System Maintenance and Testing		
Requirement in Approved Standard	**Translation to New Standard or Other Action**	**Proposed Language in PRC-005-2 – Protection System Maintenance Or Comment**
		performances of each distinct maintenance activity for the Protection System Components, or all performances of each distinct maintenance activity for the Protection System Component since the previous scheduled audit date, whichever is longer.

Standard: PRC-008-0 - Implementation and Documentation of Underfrequency Load Shedding Equipment Maintenance Program		
Requirement in Approved Standard	**Translation to New Standard or Other Action**	**Proposed Language in PRC-005-2 – Protection System Maintenance or Comments**
R1. The Transmission Owner and Distribution Provider with a UFLS program (as required by its Regional Reliability Organization) shall have a UFLS equipment maintenance and testing program in place. This UFLS equipment maintenance and testing program shall include UFLS equipment identification, the schedule for UFLS equipment testing, and the schedule for UFLS equipment maintenance.	PRC-005-2, R1, R2, R3, R4, and Applicability 4.2.2 Tables 1-1 – 1-5, Table 2, and Table 3	See mapping of Requirements R1 and R2 for PRC-005-1 above. 4.2 Facilities 4.2.2 Protection Systems used for Underfrequency load-shedding systems installed per ERO Underfrequency load-shedding requirements. See PRC-005-2 Tables 1-1 through 1-5, Table 2, and Table 3. The Tables establish prescribed maximum intervals and minimum maintenance activities, and, as such, the entity no longer needs to establish the basis for their intervals.
R2. The Transmission Owner and Distribution Provider with a UFLS program (as required by its Regional Reliability Organization) shall implement its UFLS equipment maintenance and testing program and shall provide UFLS maintenance and testing program results to its Regional Reliability Organization and NERC on request (within 30 calendar days).	PRC-005-2, R3, PRC-002, R4 PRC-005-2, M3, and PRC-005-2 M4 NERC Compliance Monitoring Enforcement Program	See mapping of Requirements R1 and R2 for PRC-005-1 above. The legacy requirement that the entity provide the program results to the RRO and NERC on request is addressed in the NERC Compliance Monitoring Enforcement Program.

Standard: PRC-011-0 - Undervoltage Load Shedding System Maintenance and Testing		
Requirement in Approved Standard	**Translation to New Standard or Other Action**	**Proposed Language in PRC-005-2 – Protection System Maintenance or Comments**
R1. The Transmission Owner and Distribution Provider that owns a UVLS system shall have a UVLS equipment maintenance and testing program in place. This program shall include: **R1.1.** The UVLS system identification which shall include but is not limited to: **R1.1.1.** Relays. **R1.1.2.** Instrument transformers. **R1.1.3.** Communications systems, where appropriate. **R1.1.4.** Batteries. **R1.2.** Documentation of maintenance and testing intervals and their basis. **R1.3.** Summary of testing procedure. **R1.4.** Schedule for system testing. **R1.5.** Schedule for system maintenance. **R1.6.** Date last tested/maintained.	PRC-005-2, R1, PRC-005-2, R2, PRC-005-2, R3, PRC-005-2, R4, PRC-005-2 M3, PRC-005-2, M4, and PRC-005-2 Applicability 4.2.3 Tables 1-1 – 1-5, Table 2, and Table 3 Data Retention 1.3	See mapping of Requirements R1, and R2 for PRC-005-1 above. 4.2 Facilities 4.2.3 Protection Systems used for undervoltage load-shedding systems installed to prevent system voltage collapse or voltage instability for BES reliability. See PRC-005-2 Tables 1-1 through 1-5, Table 2, and Table 3. The Tables establish prescribed maximum intervals and minimum maintenance activities, and, as such, the entity no longer needs to establish the basis for their intervals. 1.3 Data Retention For Requirement R2, Requirement R3, Requirement R4, and Requirement R5, the Transmission Owner, Generator Owner, and Distribution Provider shall each keep documentation of the two most recent performances of each distinct maintenance activity for the Protection System Components, or all performances of each distinct maintenance activity for the Protection System Component since the previous scheduled audit date, whichever is longer.
R2. The Transmission Owner and Distribution Provider that owns a UVLS system shall provide documentation of its	NERC Compliance Monitoring Enforcement	The legacy requirement that the entity provide the program results to the RRO and NERC on request is addressed in the NERC Compliance

Standard: PRC-011-0 - Undervoltage Load Shedding System Maintenance and Testing		
Requirement in Approved Standard	**Translation to New Standard or Other Action**	**Proposed Language in PRC-005-2 – Protection System Maintenance or Comments**
UVLS equipment maintenance and testing program and the implementation of that UVLS equipment maintenance and testing program to its Regional Reliability Organization and NERC on request (within 30 calendar days).	Program	Monitoring Enforcement Program

Standard: PRC-017-0 - Special Protection System Maintenance and Testing		
Requirement in Approved Standard	**Translation to New Standard or Other Action**	**Proposed Language in PRC-005-2 – Protection System Maintenance or Comments**
R1. The Transmission Owner, Generator Owner, and Distribution Provider that owns an SPS shall have a system maintenance and testing program(s) in place. The program(s) shall include: **R1.1.** SPS identification shall include but is not limited to: **R1.1.1.** Relays. **R1.1.2.** Instrument transformers. **R1.1.3.** Communications systems, where appropriate. **R1.1.4.** Batteries. **R1.2.** Documentation of maintenance and testing intervals and their basis. **R1.3.** Summary of testing procedure. **R1.4.** Schedule for system testing. **R1.5.** Schedule for system maintenance. **R1.6.** Date last tested/maintained.	PRC-005-2, R1, PRC-005-2, R2, PRC-005-2, R3, PRC-005-2, R4, PRC-005-2 M3, PRC-005-2, M4, and PRC-005-2 Applicability 4.2.4 Tables 1-1 – 1-5, and Table 2 Data Retention 1.3	See mapping of Requirements R1, and R2 for PRC-005-1 above. 4.2 Facilities 4.2.4 Protection Systems installed as a Special Protection System (SPS) for BES reliability. See PRC-005-2 Tables 1-1 through 1-5 and Table 2. The Tables establish prescribed maximum intervals and minimum maintenance activities, and, as such, the entity no longer needs to establish the basis for their intervals. 1.3 Data Retention For Requirement R2, Requirement R3, Requirement R4, and Requirement R5, the Transmission Owner, Generator Owner, and Distribution Provider shall each keep documentation of the two most recent performances of each distinct maintenance activity for the Protection System Components, or all performances of each distinct maintenance activity for the Protection System Component since the previous scheduled audit date, whichever is longer.

Standard: PRC-017-0 - Special Protection System Maintenance and Testing		
Requirement in Approved Standard	**Translation to New Standard or Other Action**	**Proposed Language in PRC-005-2 – Protection System Maintenance Or Comment**
R2. The Transmission Owner, Generator Owner, and Distribution Provider that owns an SPS shall provide documentation of the program and its implementation to the appropriate Regional Reliability Organizations and NERC on request (within 30 calendar days).	NERC Compliance Monitoring Enforcement Program	R1. The legacy requirement that the entity provide the program results to the RRO and NERC on request is addressed in the NERC Compliance Monitoring Enforcement Program

Exhibit H

Consideration of Comments for Proposed Reliability Standard PRC-005-2

Project 2007-17
Protection System Maintenance and Testing

Related Files

Status:
PRC-005-2 will be presented to the NERC Board of Trustees for adoption in November 2012 and if adopted, filed with regulators for approval.

Purpose/Industry Need:
The purpose of standard PRC-005 should remain "To ensure all transmission and generation Protection Systems affecting the reliability of the Bulk Electric System (BES) are maintained and tested."

In Order 693, the Federal Energy Regulatory Commission directed that changes be made to these standards.

These standards should be consolidated into a single standard to reduce the costs of compliance and a number of technical short comings in these standards should be corrected to provide reliable performance when responding to abnormal system conditions.

Draft	Action	Dates	Results	Consideration of Comments
Draft 4 **Standard PRC-005-2** Clean | Redline to Last Posting **Implementation Plan** Clean **Supporting Materials:** Definition of Protection System **Supplemental**	Recirculation Ballot Info>> Vote>>	10/15/12 - 10/24/12 (closed)	Summary>> Ballot Results>>	

Reference & FAQ Clean | Redline to Last Posting **Technical Justification** Clean | Redline **Mapping Document** Clean Table of Issues and Directives **VRF and VSL Justification** Clean | Redline **Last Approved Versions of Standards to be Retired:** PRC-005-1.1b PRC-008-0 PRC-011-0 PRC-017-0				
Draft 4 **Standard PRC-005-2** Clean | Redline to Last Posting **Implementation Plan** Clean | Redline to Last Posting				

Supporting Materials: Unofficial Comment Form (Word) Definition of Protection System (Updated 8/16/12) **Supplemental Reference & FAQ** Clean | Redline to Last Posting **Technical Justification** Clean | Redline **Mapping Document** Clean | Redline to Last Posting Table of Issues and Directives **VRF and VSL Justification** Clean | Redline **Last Approved Versions of Standards to be Retired:** PRC-005-1.1b PRC-008-0 PRC-011-0 PRC-017-0	Successive Ballot Updated Info>> Info>> Vote>>	08/17/12 - 08/27/12 (closed)	Summary>> Ballot Results>>	
	Comment Period Info>> Submit Comments>>	07/27/12 - 08/27/12 (closed)	Comments Received>>	Consideration of Comments**(18)**
Draft 3	Successive	06/18/12 -	Summary>>	

Standard PRC-005-2 Clean | Redline to Last Posting **Implementation Plan** Clean | Redline to Last Posting **Supporting Materials:** Definition of Protection System IEEE Stationary Battery Committee NERC Task Force Report and SDT Response **For Information:** Draft SAR for Phase 2 of Project 2007-17 **Supplemental Reference & FAQ** Clean | Redline to Last Posting **Technical Justification** Clean | Redline **Mapping Document** Clean | Redline to Last Posting Table of Issues and Directives	Ballot Updated Info>> Info>>	06/27/12 (closed)	Ballot Results>> Non-binding Poll Results>>	
	Formal Comment Period Info>> Submit Comments>>	05/29/12 - 06/27/12 (closed)	Comments Received>>	Consideration of Comments**(17)**

VRF and VSL Justification Clean | Redline Unofficial Comment Form (Word) **Last Approved Versions of Standards to be Retired:** PRC-005-1 PRC-008-0 PRC-011-0 PRC-017-0				
Draft 2 **Standard PRC-005-2** Clean | Redline to Last Posting **Implementation Plan** Clean | Redline to Last Posting **SAR** Clean | Redline to Last Posting **Supporting Materials:** Definition of Protection System **Supplemental Reference & FAQ** Clean | Redline to Last Posting	Successive Ballot and Non-binding Poll Updated Info>> Vote>>	03/19/12 - 03/28/12 (closed)	Full Record>> Non-binding Poll Results>>	
	Formal Comment Period Updated Info>> Info>> Submit Comments>>	02/28/12 - 03/28/12 (closed)	Comments Received>>	Consideration of Comments**(16)**

Technical Justification Mapping Document Table of Issues and Directives VRF and VSL Justification Unofficial Comment Form **Last Approved Versions of Standards to be Retired:** PRC-005-1 PRC-008-0 PRC-011-0 PRC-017-0				
Drafting Team Nominations	Nomination Period Info>> Submit Nomination>>	09/01/11 - 09/23/11 (closed)		
Standard PRC-005-2 Clean |Redline to Recirc Ballot **Implementation Plan** Clean | Redline to Recirc Ballot	Initial Ballot and Non-Binding Poll of VRFs and VSLs Info>> Vote>>	09/19/11 - 09/29/11 (closed)	Summary>> Full Record>> Non-Binding Poll Results>>	Consideration of Comments**(15)**
	Formal	08/15/11 -	Comments	

SAR **Supporting Materials:** Definition of Protection System **Supplemental Reference & FAQ** Clean | Redline to Last Posting Mapping Document Unofficial Comment Form **Last Approved Versions of Standards to be Retired** PRC-005-1 PRC-008-0 PRC-011-0 PRC-017-0	Comment Period Submit Comments>>	09/29/11 (closed)	Received>>	
	Join Ballot Pools>> (Initial Ballot and Non-Binding Poll)	08/15/11 - 09/14/11 (closed)		
After PRC-005-2 failed to reach ballot pool approval in the recirculation ballot that ended on 6/30/11, the drafting team revised the standard. The Standards Committee authorized re-initiating the project with a posting of the SAR and revised standard for a 45-day comment period, with an initial ballot of the standard conducted during the last 10 days of the comment period.				
Standard Draft 4 PRC-005-2 Clean | Redline to Last Posting Implementation Plan for Standard Clean | Redline to Last Posting	Recirculation Ballot and Non-binding Poll Info>> Vote>>	6/20/11-6/30/11 (closed)	Summary>> Full Record>> Non-Binding Poll Results>>	

Supporting Materials: Definition for Approval Supplemental Reference & FAQ Clean | Redline to Last Posting **Last Approved Versions of Standards to be Retired** PRC-005-1 PRC-008-0 PRC-011-0 PRC-017-0				
Standard Draft 4 PRC-005-2 Clean | Redline to Last Posting Implementation Plan for Standard Clean | Redline to Last Posting **Supporting Materials:** Comment Form (Word) Supplemental Reference & FAQ Clean	Successive Ballot and Non-Binding Poll Info>> Vote>>	05/03/11 - 05/13/11 (closed)	Summary Update>> Full Records Update>> Non-Binding Poll Results>>	Consideration of Comments**(14)**
	Comment Period Submit Comments>> Info>>	04/13/11 - 05/13/11 (closed)	Comments Received>>	
Standard Draft 3 PRC-005-2	Successive Ballot and	12/10/10-12/20/10	Summary>>	Consideration of Comments**(13)**

Clean | Redline to Last Posting Implementation Plan for Standard Clean | Redline to Last Posting **Supporting Materials** Comment Form (Word) Frequently Asked Questions Clean | Redline to Last Posting Supplemental Reference Clean |Redline to Last Posting Last Approved Versions of Standards to be Retired PRC-005-1 PRC-008-0 PRC-011-0 PRC-017-0	Non-binding Poll of VRFs and VSLs Updated Info>> Info>> Join>>	(closed) Successive Ballot (closed) Non-binding Poll of VRFs and VSLs (closed)	Full Records>> Non-Binding Poll Results>>	Consideration of Comments**(12)**
	Comment Period Submit Comments for Standard >> Info>>	11/17/10-12/17/10 (closed)	Comments Received>>	Consideration of Comments**(11)**
Draft 5 Definition of "Protection System" Clean | Redline to last approval	Recirculation Ballot >> Vote>> Info>>	11/01/10 - 11/11/10 (closed)	Summary>> Full Record>>	

Implementation Plan for Definition Clean | Redline to last posting				
Draft 4 Definition of "Protection System" Clean | Redline to Second Ballot Redline to Last Approval Implementation Plan for Definition Clean Supporting Materials: Comment Form (Word)	Successive Ballot >> Vote>> Info>>	10/2/10 - 10/14/10 (closed)	Summary>> Full Record>>	Consideration of Comments**(10)**
	30-day Formal Comment Period Info>> Submit Comments>>	9/13/10 - 10/12/10 (closed)	Comments Received>>	Consideration of Comments**(9)**
Draft 3 Definition of "Protection System" Clean | Redline to Initial Ballot Implementation Plan for Definition Clean | Redline to Initial Ballot	Second Ballot for Definition Vote>> | Info>>	07/23/10 - 08/02/10 (closed)	Summary>> Full Record>>	Consideration of Comments (definition)**(8)**
Draft 2	Initial Ballots	07/08/10 -	Summary>>	Consideration of

PRC-005-2 Clean | Redline to Last Posting Implementation Plan for Standard Clean | Redline to Last Posting Implementation Plan for Definition **Supporting Materials:** Comment Form for Proposed Definition (Word) Comment Form for Standard (Word) Frequently Asked Questions Clean | Redline to Last Posting Supplemental Reference Clean | Redline to Last Posting Definition of "Protection System" Proposed Version of Issues Database	and Non-binding VRF/VSL Poll Vote>> | Info>>	07/17/10 (closed)	Full Record>> Standard Full Record>> Definition Non-binding Poll Results>>	Comments (standard) **(7)** Consideration of Comments (definition) **(6)** Consideration of Comments (non-binding poll) **(5)**
	Pre-ballot Review Join>> | Info>>	06/11/10 - 07/02/10 (closed)		
	Comment Period Submit Comments (For Standard) Submit Comments (For Definition) Info>>	06/11/10 - 07/16/10 (closed)	Comments Received (Standard)>> Comments Received (Definition)>>	Consideration of Comments (definition) **(4)** Consideration of Comments **(3)**
Draft 1 Protection System Maintenance and Testing Standard	Comment Period Info>>	07/24/09 - 09/08/09 (closed)	Comments Received>>	Consideration of Comments**(2)**

PRC-005-2 **Supporting Materials:** Comment Form (Word) Implementation Plan Supplementary Reference Status of Addressing Issues Frequently Asked Questions Assessment of Impact of Proposed Modification to the Definition of "Protection System"	Submit Comments>>			
	Standard Drafting Team Nominations Info>> Submit Nomination>>	08/15/07 - 08/29/07 (closed)		
Draft SAR Version 1 Protection System Maintenance and	Comment Period Info>>	06/11/07 - 07/10/07 (closed)	Comments Received>>	Consideration of Comments**(1)**

Testing Draft SAR Version 1 **Supporting Materials**: NERC SPCTF Assessment of Standards	Submit Comments>>			

Consideration of Comments on 1st Draft of Protection System Maintenance and Testing SAR (Project 2007-17)

The Protection System Maintenance and Testing SAR requesters thank all commenters who submitted comments on the first draft of SAR. This SAR was posted for a 30-day public comment period from June 11 through July 10, 2007. The requesters asked stakeholders to provide feedback on the standard through a special SAR Comment Form. There were 18 sets of comments, including comments from 85 different people from more than 50 companies representing 8 of the 10 Industry Segments as shown in the table on the following pages.

The SAR drafting team made no changes to the SAR based on stakeholder comments.

Based on the comments received, the drafting team is recommending that the Standards Committee authorize moving the SAR forward to the standard drafting stage of the standards development process.

In this "Consideration of Comments" document stakeholder comments have been organized so that it is easier to see the responses associated with each question. All comments received on the standards can be viewed in their original format at:

http://www.nerc.com/~filez/standards/Protection_System_Maintenance_Project_2007-17.html

If you feel that your comment has been overlooked, please let us know immediately. Our goal is to give every comment serious consideration in this process! If you feel there has been an error or omission, you can contact the Director of Standards, Gerry Adamski, at 609-452-8060 or at gerry.adamski@nerc.net. In addition, there is a NERC Reliability Standards Appeals Process.[1]

[1] The appeals process is in the Reliability Standards Development Procedures: http://www.nerc.com/standards/newstandardsprocess.html.

The Industry Segments are:

1 — Transmission Owners
2 — RTOs, ISOs
3 — Load-serving Entities
4 — Transmission-dependent Utilities
5 — Electric Generators
6 — Electricity Brokers, Aggregators, and Marketers
7 — Large Electricity End Users
8 — Small Electricity End Users
9 — Federal, State, Provincial Regulatory or other Government Entities
10 – Regional Reliability Organizations, Regional Entities

Commenter		Organization	Industry Segment									
			1	2	3	4	5	6	7	8	9	10
1.	Anita Lee (G6)	AESO		✓								
2.	Jay Farrington (G2)	Alabama Electric Coop., Inc.	✓									
3.	Ken Goldsmith (G5)	ALT										✓
4.	Robert Rauschenbach (G2)	Ameren	✓									
5.	Thad Kness	American Electric Power (AEP)	✓				✓	✓				
6.	Dave Rudolph (G4)	BEPC										✓
7.	Dean Bender	Bonneville Power Administration (BPA)	✓		✓		✓	✓				
8.	Brent Kingsford (G6)	CAISO		✓								
9.	Alan Gale	City of Tallahassee (FRCC)					✓					
10.	Glen McCartney (G4)	Constellation Energy						✓				
11.	Michael Gildea (G4)	Constellation Energy						✓				
12.	Nancy C. Denton	Consumers Energy Company			✓	✓						
13.	Greg Rowland	Duke Energy										
14.	Tom Seeley (G2)	E. ON-U.S.	✓									
15.	Charlie Fink (G2)	Entergy	✓									
16.	Jammie Lee (G2)	Entergy	✓									
17.	Steve Myers (G6)	ERCOT		✓								
18.	Doug Hohlbaugh (G7)	FirstEnergy Corp. (FE)	✓		✓		✓	✓				
19.	Craig Boyle (G7)	Transm. Substa.	✓									

Commenter		Organization	Industry Segment									
			1	2	3	4	5	6	7	8	9	10
		Maintenance (FE)										
20.	Ken Ddresner (G7)	Fossil Generation (FE)					✓					
21.	Bill Duge (G7)	Nuclear Generation (FE)					✓					
22.	Dave Powell (G7)	Transm. Planning & Protection (FE)	✓									
23.	Jeff Mackauer(G7)	Transm. Planning & Protection (FE)	✓									
24.	Eric Senkowizc	FRCC		✓								
25.	Phil Winston (G3)	Georgia Power Company			✓							
26.	Steve Waldrep (G2)	Georgia Power Company	✓									
27.	Phil Winston (G2)	Georgia Power Company	✓									
28.	Hong-Ming Shuh (G2)	Georgia Transmission Corp.	✓									
29.	Neal Jones (G2)	Georgia Transmission Corp.	✓									
30.	David Kiguel (G4)	Hydro One Networks	✓									
31.	Ron Falsetti (I) (G6)	IESO		✓								
32.	Matt Goldberg (G6)	ISO- New England		✓								
33.	Kathleen Goodman (G4)	ISO-New England		✓								
34.	William Shemley (G4)	ISO-New England		✓								
35.	Eric Ruskamp (G4)	LES										✓
36.	Donald Nelson (G4)	MADPC									✓	
37.	Tony Clark	Manitoba Hydro	✓		✓		✓	✓				
38.	Tom Mielnik (G4)	MEC										✓
39.	Robert Coish (G5)	MHEB										✓
40.	Joe Knight (G5)	Midwest Reliability Organization										✓
41.	Mike Brytowski (G4)	Midwest Reliability Organization										✓
42.	Terry Bilke (G5)	MISO										✓
43.	William Phillips (G6)	MISO		✓								
44.	Carol Gerou (G5)	Minnesota Power (MP)										✓
45.	Ernesto Paon (G2)	Municipal Electric Authority of GA	✓									
46.	Michael Shiavone (G4)	National Grid US	✓									

Commenter		Organization	Industry Segment									
			1	2	3	4	5	6	7	8	9	10
47.	Greg Campoli (G4)	New York ISO		✓								
48.	Ralph Rufrano (G4)	New York Power Authority	✓									
49.	Murale Gopinathan (G4)	Northeast Utilities	✓									
50.	Guy V. Zito (G4)	NPCC										✓
51.	Al Adamson (G4)	NY State Reliability Council										✓
52.	Jim Castle (G6)	NYISO		✓								
53.	Richard Kafka (G8)	Pepco Holdings, Inc.										
54.	Alicia Daugherty (G6)	PJM		✓								
55.	Jerry Blackley (G2)	Progress Energy Carolinas	✓									
56.	Phil Riley (G1)	PSC of South Carolina									✓	
57.	Mignon L. Clyburn (G1)	PSC of South Carolina									✓	
58.	Elizabeth B. Fleming (G1)	PSC of South Carolina									✓	
59.	G. O'Neal Hamilton (G1)	PSC of South Carolina									✓	
60.	John E. Howard (G1)	PSC of South Carolina									✓	
61.	Randy Mitchell (G1)	PSC of South Carolina									✓	
62.	C. Robert Moseley (G1)	PSC of South Carolina									✓	
63.	David A. Wright (G1)	PSC of South Carolina									✓	
64.	Mike Gentry	Salt River Project (SRP)	✓									
65.	Bridget Coffman (G2)	SC Public Service Authority	✓									
66.	Pat Huntley (G2)	SERC Reliability Corp.										✓
67.	Roman Carter (G3)	So. Company Transmission	✓									
68.	Marc Butts (G3)	So. Company Transmission	✓									
69.	JT Wood (G3)	So. Company Transmission	✓									
70.	Jim Busbin (G3)	So. Company Transmission	✓									
71.	Marion Frick (G2)	South Carolina Electric & Gas Co.	✓									

Commenter		Organization	Industry Segment									
			1	2	3	4	5	6	7	8	9	10
72.	Charles Yeung (G6)	Southwest Power Pool		✓								
73.	E. William Riley	Southwest Transmission Co., Inc.	✓									
74.	Tom D. Spence	Southwest Transmission Co., Inc.	✓									
75.	George Pitts (G2)	Tennessee Valley Authority	✓									
76.	Meyer Kao (G2)	Tennessee Valley Authority	✓									
77.	Ron Falsetti (G4) (G6)	The IESO		✓								
78.	Roger Champagne (G4)(I)	TransÉnergie Hydro-Québec (HQTE)	✓									
79.	Jim Haigh (G4)	WAPA										✓
80.	Neal Balu (G5)	WPS										✓
81.	Pam Oreschnick (G4)	XEL										✓
82.	Carl Kinsley (G8)	Delmarva Power & Light	✓									
83.	Alvin Depew (G8)	Potomac Electric Power Company	✓									
84.	Evan Sage (G8)	Potomac Electric Power Company	✓									

I – Indicates that individual comments were submitted in addition to comments submitted as part of a group
G1 – Public Service Commission of South Carolina (PSC SC)
G2 – SERC EC Protection & Control Subcommittee (SERC EC PCS)
G3 – Southern Company Transmission
G4 – NPCC CP9 Reliability Standards Working Group (NPCC CP9 RSWG)
G5 – MRO Members (MRO)
G6 – IRC Standards Review Committee (IRC)
G7 – FirstEnergy Corp. (FE)
G8 – Pepco Holdings, Inc.

Index to Questions, Comments, and Responses

1. Do you agree that there is a reliability-related need to improve the requirements in this standard? 7
2. Do you agree with the proposed scope of this SAR? 9
3. Do you agree with the applicability of the proposed SAR (Transmission Owners, Generator Owners and Distribution Providers - Distribution Providers may own the devices that must be tested and maintained)? 12
4. If you know of a Regional Variance that should be developed as part of this SAR, please identify that for us. If not, please explain in the comment area. 14
5. If you are aware of a Business Practice that needs to be developed to support the proposed SAR, please identify that for us. 15
6. If you have any other comments on this SAR that you haven't provided above, please provide them here. 16

1. Do you agree that there is a reliability-related need to improve the requirements in this standard?

Summary Consideration: Most commentators indicated they do believe there is a reliability-related need to improve the requirements in this set of standards.

Question #1			
Commenter	**Yes**	**No**	**Comment**
AEP		☑	AEP has not had an event, due to deficiencies in protection maintenance, in it's long existence that jeopardized the reliability or availability of Bulk Power transfers. Simply combining multiple standards into one, does nothing for improving reliability.
Response: The proposed changes will improve clarity which should benefit reliability. While AEP may have an excellent record of maintenance, the existing standards are quite vague and allow an entity that performs maintenance once every 100 years to be fully compliant.			
Manitoba Hydro		☑	There is a need to better define and explain the terms "maintenance" and "testing" as they relate to this standard. Also a tighter definition as to which systems are considered to affect the BES is required. The need to improve the standard is driven by the administration of the standard rather than reliability.
Response: As envisioned, the SDT will work with stake holders to define the terms 'maintenance' and 'testing.' The SAR DT disagrees that the standard changes are driven by "administration". The existing requirements are vague enough to allow an entity to perform maintenance once every 100 years and still be compliant.			
SWTC	☑		This SAR proposes to revise several standards to eliminate ambiguities and to provide requirements that are measurable. In addition, the SPCTF report "Assessment of PRC-005-1 – Transmission and Generation Protection System Maintenance and Testing; with implications for PRC-008-0, PRC-011-0, and PRC-017-0" indicates the need to differentiate between the different technologies used and insure the standard applies to all in the appropriate way (i.e. electro-mechanicals, microprocessor-based, solid-state). Southwest Transmission Cooperative, Inc. also recognizes this deficit in the existing standards.
Response: The SAR DT agrees and appreciates your support.			
SERC EC PCS	☑		Consolidation of the maintenance and testing standards is appropriate. Separate definitions for maintenance and testing are needed.
Response: The SAR DT agrees and appreciates your support.			
FRCC	☑		Centralizing System Protection equipment maintenance and testing requirements in a single standard will add clarity, minimize synchronization issues across standards, help provide consistent terminology and improve understanding of system protection standards.
Response: The SAR DT agrees and appreciates your support.			

Question #1			
Commenter	**Yes**	**No**	**Comment**
PSC SC	☑		
BPA	☑		
Consumers Energy	☑		
IESO	☑		
SRP	☑		
SOCO Transmission	☑		
NPCC CP9 RSWG	☑		
MRO	☑		
IRC	☑		
FirstEnergy	☑		
HQT	☑		
Pepco Holdings	☑		
Duke Energy	☑		

2. Do you agree with the proposed scope of this SAR?

Summary Consideration: Some entities objected to the use of 'maximum allowable intervals,' however, FERC has ordered that maximum allowable intervals be developed. No changes to the SAR were made in response to these comments.

Question #2			
Commenter	**Yes**	**No**	**Comment**
AEP		☑	On the surface, the premise of reducing costs and improving efficiencies by combining multiple standards sounds excellent. Having to only keep up with one standard instead of four will not generate significant savings due to the fact that the maintenance will still have to be performed. But what lies hidden, is the fact that prescribed maximum allowable maintenance intervals will result from the revisions. They may require more frequent testing to be performed. Is there evidence that increasing the interval frequency results in a measurable increase in reliability and availability? Development of prescribed maximum intervals that are vastly different than the utility's existing practices may actual increase their O&M costs and reduce efficiencies. The function of the protective system needs to be taken into account. The purpose of the line protection is very different than the purpose of UFLS/UVLS and SPS's. The UFLS program is there as the last line of defense against a decaying system after all other measures have failed. The combination of all the different relaying systems places them on equal ground. Shouldn't the reliability and dependability for one be more important than the others?
Response: In order to develop a measurable standard and conform to the direction from FERC regarding allowable maintenance intervals, the SDT, working with stakeholders, will develop requirements for maximum allowable maintenance intervals for protection systems. Combining these 4 standards into 1 does not preclude the SDT from developing different criteria for different types of protection systems. Your concerns regarding the different purposes of protection systems and your question regarding varying importance of different protection systems will be forwarded to the SDT.			
Manitoba Hydro		☑	We disagree that there is a need to change the standard to include more specificity for maintenance and test procedures. We also disagree with mandating minimum maintenance intervals for protection system equipment.
Response: FERC has directed NERC as the ERO to specify maximum allowable maintenance intervals.			
Duke Energy		☑	Combining PRC-005, 008, 011 and 017 into one new standard does not seem to be the best approach. Duke Energy does not have UVLS systems or Special Protection Systems. Furthermore, Duke Energy's Underfrequency Load Shedding system is on the transmission system in the Carolinas, but on the distribution system in the Midwest.

Question #2			
Commenter	**Yes**	**No**	**Comment**
			Combining these standards would likely create confusion and compliance issues for us and others as well. Also, combining the standards is unlikely to result in simplification, as different requirements associated with the different protection systems could have different Violation Risk Factors and levels of non-compliance, which would necessitate keeping them separate in the combined standard, which would defeat the purpose of combining them in the first place.
Response: Combining these 4 standards into 1 does not preclude the SDT from developing different criteria for different types of protection systems (concerns about different voltage levels remain regardless if there is one standard or more than one).			
SWTC	☑		Since most protection schemes are maintained and tested in a similar manner regardless of scheme type, we agree that combining the (4) PRC standards related to maintenance and testing of different types of systems into one standard will create a that is more streamlined and less burdensome standard with easily understood measurable compliance elements. The most exciting part of the proposed modifications is the inclusion of condition-based and performance-based maintenance and testing and not just time-based criteria. Presently Southwest Transmission Cooperative, Inc. uses this type of maintenance and testing criteria (maintenance data server) which is the current system protection industry technology.
Response: Thank you for your support.			
FirstEnergy	☑		Bullet #5 of the "Detailed Description" on page SAR-2 indicates the following: "Applicable to all four standards — The requirements of the existing standards, as stated, support time-based maintenance and testing, and should be expanded to include condition-based and performance-based maintenance and testing. The requirements for maintenance and testing procedures need to have more specificity to insure that the stated intent of the standards is met to support review by the compliance monitor." FE supports the scope of the SAR to consider adding the ability for condition-based and performance-based testing, as suggested by the System Protection and Control Task Force. Additionally, the SDT should consider the need to perform some level of preventative maintenance on a periodic basis at an established maximum interval length, that would vary per the equipment being maintained. The interval established would be based on established guidelines from vendors, EPRI, industry experts, etc.

Question #2			
Commenter	**Yes**	**No**	**Comment**
Response: Thank you- The SDT will develop maximum allowable maintenance intervals for protection systems, working with stakeholders.			
FRCC	☑	☑	Use of subject matter experts (NERC SPCTF) along with the NERC Planning Committee review of the assessment is an effective and efficient way to supplement project SARs and provides critical input at the front-end of the standards process. Attachment A is described as the SPCTF assessment, but attachment A to the SAR is the SPCTF roster. The assessment referenced in the scope of the SAR should include "Draft 1.0" if the full assessment is not included as part of the SAR.
Response: The attachments and supporting material references will be posted.			
PSC SC	☑		
SERC EC PCS	☑		
BPA	☑		
Consumers Energy	☑		
IESO	☑		
SRP	☑		
SOCO Transmission	☑		
NPCC CP9 RSWG	☑		
MRO	☑		
IRC	☑		
HQT	☑		
Pepco Holdings	☑		

3. Do you agree with the applicability of the proposed SAR (Transmission Owners, Generator Owners and Distribution Providers - Distribution Providers may own the devices that must be tested and maintained)?

Summary Consideration: Based on comments received no changes were made to the SAR

Question #3			
Commenter	**Yes**	**No**	**Comment**
FRCC			This question may be better addressed as the standards are integrated.
Response: The SAR DT is obligated to address the applicability,			
MRO		☑	FERC Order 693 in both paragraph 1466 and in footnote 384, indicates that in some areas of the country, Load Serving Entities (LSE) and Transmission Operators (TOP) may individually or jointly own and operate a protection system. Thus, these additional entities should be subject to the resulting consolidated standard. The MRO believes that the following caveat should be added to the LSE where it is listed as an Applicable Entity, (where operation of the protection system can affect the Bulk Electric System). 2. The MRO requests that the SDT review whether or not the Reliability Coordinator (RC) should be added to the list of Applicable Entities given their wide area view-for example, the RC may need to be involved in determining which protection systems below 100kV will affect the BES.
Response: FERC Order 693 in both paragraph 1466 and in footnote 384 reiterates IESO-NE comments on the NOPPR. The FERC directive was to consider this comment. According to the NERC Functional Model, Load-serving Entities, Transmission Operators and Reliability Coordinators are not owners of protection systems – and the entity responsible for maintenance is the facility owner.			
NPCC CP9 RSWG HQT	☑	☑	Each requirement needs to specifically address what protection systems need to comply with the standard - i.e. a generator not connected to the BPS with under frequency trip relay should only be subject to under frequency relay maintenance requirements.
Response: Your comment will be referred to the SDT for consideration when convened.			
FirstEnergy	☑		The inclusion of the Distribution Provider is generally needed for UFLS and UVLS relays. The confusion that previously existed in PRC-005 by including the DP entity should be mitigated by the proposed consolidation of the four maintenance standards.
Response: Thank you for your comment.			
PSC SC	☑		
SERC EC PCS	☑		
AEP	☑		
BPA	☑		

Question #3			
Commenter	**Yes**	**No**	**Comment**
Consumers Energy	☑		
IESO	☑		
SRP	☑		
SOCO Transmission	☑		
SWTC	☑		
IRC	☑		
Pepco Holdings	☑		
Duke Energy	☑		

4. If you know of a Regional Variance that should be developed as part of this SAR, please identify that for us. If not, please explain in the comment area.

Summary Consideration: No regional variances were identified by the commentators

Question #4		
Commenter	**Regional Variance**	**Comment**
NPCC CP9 RSWG	None	Certain unavoidable delays like the inability to schedule outages for reliability reasons or labor disputes, or force-majeure conditions could affect testing period requirements. These factors should be considered and certain latitude, with the "appropriate approvals", needs to be provided for delays in the testing process.
Response: This is a compliance issue not a regional variance – The compliance enforcement program does give the compliance monitor latitude to consider extenuating circumstances.		
PSC SC	N/A	
SERC EC PCS	None	
AEP	None	
BPA	No known regional variance.	
Consumers Energy	N/A	
SWTC	N/A	Not aware of any Regional Variance requirements.
MRO	None	
FirstEnergy		Not aware of any.
HQT	None	

5. If you are aware of a Business Practice that needs to be developed to support the proposed SAR, please identify that for us.

Summary Consideration: No needs for development of Business Practices were identified by the commentators.

Question #5		
Commenter	**Business Practice**	**Comment**
AEP	Possibly	AEP and other utilities, with many years of experience serving customers and supporting the electric grid, have voluntarily integrated maintenance and testing programs into the core of their work practices and processes. AEP fully supports improvements if they truly foster reliability and availability benefits to bulk power transfers. More Standards, Requirements and Business Practices are not always better. If Standards create burdens on a utility's physical resources and budgets, then some mechanism must be available to allow for the needed changes.
Response: Please monitor the work of the SDT and advise the team if added burdens are created by any of the proposed requirement and advise the team of the need for any business practice or other mechanism necessary to support the proposed requirements.		
PSC SC	N/A	
SERC EC PCS	None	
Consumers Energy	N/A	
SWTC	N/A	Not aware of any Business Practice needs.
NPCC CP9 RSWG	None that we know of.	
MRO	None	
IRC	None	
FirstEnergy		Not aware of any.
HQT		None that we know of.

6. If you have any other comments on this SAR that you haven't provided above, please provide them here.

Question #6	
Commenter	**Comment**
SERC EC PCS	The SERC EC PCS supports the work of the NERC SPCTF in their assessments of these standards.
Response: Thank you for your support	
AEP	The standard should not use the term Bulk Electric System, but should instead specify a voltage threshold for impacts to bulk system transfers - specifically; 'Facilities operated 200 kV and above and Regionally-defined, Operationally Significant facilities operated greater than 100 kV, but less than 199 kV'. The term 'affects' also needs to be clarified. Inclusion of all facilities greater than 100 kV does not benefit the reliability of national bulk power transfers. For example, the loss or misoperation of a 138 kV line serving a localized load center would not be detrimental to bulk power transfers multiple busses away.
Response: Your comment will be referred to the drafting team when convened for consideration when drafting the standard.	
BPA	In the "Detailed Description" section of the SAR, it states: "Part of the stated purpose in PRC-017 is: "To ensure that maintenance and testing programs are developed and misoperations are analyzed and corrected." The phrase "and misoperations are analyzed and corrected" is not clearly appropriate in a maintenance and testing standard. That is the purpose is more appropriate in PRC-003 and PRC-004, which relate to the analysis and mitigation of protection system misoperations. Analysis of correct operations or misoperations may be an integral part of condition-based maintenance processes, but need not be mandated in a maintenance standard." The analysis of SPS misoperations is handled in PRC-016 (SPS Misoperations) and PRC 012 (SPS review Procedure) not in PRC-003 or PRC-004. Therefore, if the phrase is removed from PRC-017, it does not need to be added to PRC-003 or PRC-004.
Response: We agree. Please see the purpose statement as stated in the SAR.	
SOCO Transmission	In the SAR you state "The revised PRC-005 standard should address the issues raised in the FERC Order 693". With the exception of mentioning the consolidation of the standards into one standard, the SAR drafting team didn't provide readers with the exact language from FERC that would be useful to know with respect to PRC-005 in the directive below: The Commission directs the ERO to develop a modification to PRC-005-1 through the Reliability Standards development process that includes a requirement that maintenance and testing of a protection system must be carried out within a maximum allowable interval that is appropriate to the type of the protection system and its impact on the reliability of the Bulk-Power System. We further direct the ERO to consider FirstEnergy's and ISO-NE's suggestion to combine PRC-005-1, PRC-008-0,

Question #6	
Commenter	**Comment**
	PRC-011-0 and PRC-017-0 into a single Reliability Standard through the Reliability Standards development process.
Response: The SAR DT Agrees – the SAR DT will make sure that all appropriate documents are included in its next posting of the SAR.	
MRO	1. The MRO commends NERC and the SDT for taking steps to remove some of the redundancy that currently exists among many of the standards today. The consolidation of the protection system maintenance and testing standards is a good first step. 2. The MRO requests that the following be considered during the initial drafting of the Requirements for this new protection and maintenance standard. A minimum set of evidence to be included in a maintenance and testing program should be established in the measures for R1.2. 3. In the SPCTF Assessment of PRC-005-1, PRC-008-0, PRC-011-0, and PRC-017-0, the clarification for R2 states that documentation is available to its Regional Reliability Organization and NERC during audits or upon request within 30 days but paragraph 1545 of FERC Order 693 states "be routinely provided to the ERO or Regional Entity and not only when it is requested." The MRO believes that the FERC request would be satisfied if the standard were to state: "the applicable entities shall provide testing records to the Regional Entity on a periodic basis e.g. (annually). 4. In the event that the SAR DT does not become the SDT, the MRO requests that these comments be forwarded on to the group that will do tha actual drafting of the Standard.
Response: The SAR DT will forward your comments to the SDT for consideration as required by the process	
IRC IESO	1. The SRC (IESO) commends NERC, the SDT and the SPCTF for providing clarity and for efforts to reduce the costs of compliance. 2 In the Standard PRC-008-0, Generation Owners were not included in the applicable entities. Generation Owners may have underfrequency tripping devices for protection of their units. It would be appropriate to include these devices for maintenance and testing requirements also. 3. Further, there is need to specify which types of relays will be covered by the new standard. The SAR Team needs to focus on better defining the Generator Protection Schemes ("GPS") that are critical to bulk power system operation, as distinct from generator operation. For example, a single generating unit may experience contingency events that would not result in any significant adverse impacts outside the local area in which the single generating unit is located. As a result, there remains a need to subject those GPSs that are important to the Bulk Power System, such as generator underfrequency trip settings, to the maintenance testing intervals to be derived in these standards. 4. Certain unavoidable delays like the inability to schedule outages for reliability reasons, labor

Question #6	
Commenter	**Comment**
	disputes, or force-majeure conditions could affect testing period requirements. These factors should be considered and certain latitude needs to be provided for delays in the testing process. 5. However, the SAR team needs to also consider, as part of its scope, assurance that the asset owner has taken all appropriate steps to assure that required outages are appropriately planned and can be reasonably accommodated and approved by the TOP or RC.
Response: 1.Thank you **2.** Generator owners are included in the SAR **3.** This comment will be forwarded to the SDT **4.** The compliance enforcement program does give the compliance monitor latitude to consider extenuating circumstances. **5.** There are other standards that require coordination of comments	
FRCC	There are many standards being addressed (Disturbance Monitoring, System Protection Coordination, Reliability Coordination, along with Regional standard developments). As these standards are integrated into PRC-005, the existing and new terminology should be consistently applied in all system protection standards (with respect to defined terms). Where terms are undefined or being revised, the drafting team should carefully consider the terms used to ensure coordination of revised or new definitions with other Reliability standards or flag conflicts within the implementation plan.
Response: Thank you for your comment, your observation will be forwarded to the SDT for consideration.	
NPCC CP9 RSWG HQT	Due consideration should be given to potential difficulties in obtaining required outages. System reliability concerns may preclude performing maintenance at the intervals required. Certain unavoidable delays like the inability to schedule outages for reliability reasons, labor disputes, or force-majeure conditions could affect testing period requirements. These factors should be considered and certain latitude needs to be provided, with "appropriate" approvals, for delays in the testing process. There is need to specify which types of relays will be covered by the new standard. The SAR Team needs to focus on better defining the Generator Protection Schemes ("GPS") that would be subject to this Standard – i.e., what subset of GPS are critical to bulk power system operation, as distinct from generator operation. For example, typically there is no single generating unit that would, if a contingency event occurs on that generating unit, result in significant adverse impacts outside of the local area in which the single generating unit is located. As a result, if these NERC Standards are to apply to all NERC-registered Generators, only a subset of the GPS need to be subjected to the maintenance testing intervals.
Response: 1. The compliance enforcement program does give the compliance monitor latitude to consider extenuating circumstances.	

Question #6	
Commenter	**Comment**
2 Your second comment will be forwarded to the SDT for consideration	
Manitoba Hydro	Manitoba Hydro takes exception to the prescriptive nature of the proposed changes to the maintenance procedures and maintenance intervals. The type of maintenance performed and the minimum maintenance intervals should be determined by the utility within the operating context of the protection system. There is no need for the standard to reflect the inherent difference between various protection system technologies as the utility would account for differences within their stated maintenance practices.
Response: The proposed changes will improve clarity which should benefit reliability. While Manitoba Hydro may have an excellent record of maintenance, the existing standards are quite vague and allow an entity that performs maintenance once every 100 years to be fully compliant.	
Pepco Holdings	This SAR will bring needed coherence to what are now several related standards.
Response: Thank you	
SRP	None.
PSC SC	N/A
Consumers Energy	None.
SWTC	N/A
FirstEnergy	None.

NERC
NORTH AMERICAN ELECTRIC RELIABILITY CORPORATION

Consideration of Comments on Draft Standard Version 1 Protection System Maintenance and Testing — Project 2007-17

The Protection System Maintenance and Testing SDT thanks all commenters who submitted comments on PRC-005-2 — Protection System Maintenance standard. This standard was posted for a 45-day public comment period from July 24, 2009 through September 8, 2009. Stakeholders were asked to provide feedback on the Standard through a special electronic comment form. There were 57 sets of comments, including comments from more than 130 different people from over 75 companies representing all of the 10 Industry Segments as shown in the table on the following pages.

http://www.nerc.com/filez/standards/Protection_System_Maintenance_Project_2007-17.html

The SDT proposed to change the name of the draft standard from "Protection System Maintenance and Testing" to "Protection System Maintenance", and to include testing as one component of "Protection System Maintenance Program", which will be a defined term. The majority of stakeholders agreed with both the change in the name of the draft standard and with the definition of Protection System Maintenance Program. Only two respondents disagreed and their comments were addressed. Hence, the draft standard will now be referred to as "Protection System Maintenance."

Stakeholders generally disagreed with the minimum maintenance activities as well as the maximum allowable intervals included in Tables 1a, 1b, and 1c in the draft standard. As a result, the SDT made extensive changes to the standard and tables regarding the maintenance activities, and made minor changes relative to the associated maintenance intervals.

A majority of the respondents agreed with the general approaches regarding condition-based and performance based maintenance programs but provided suggestions on improving the clarity of the provisions within the tables and expressed concerns about perceived administrative issues in establishing the programs. The SDT responded by revising the tables to improve clarity and addressing the administrative concerns in its responses to comments.

Stakeholders expressed appreciation for the "Supplementary Reference Document" and the "Frequently-asked Questions" (FAQs) document. In its responses to the comments, the SDT explained the relationship between the Standard and the two documents. Additionally, the SDT addressed many of the comments in Questions 1-5 by developing additional FAQ content, and referring the respondents to the FAQs document.

Most stakeholders were unaware of any conflicts between the proposed standard and any business practices; however, a few commented that conflicts possibly existed with existing business practices or with other organizations such as the Nuclear Regulatory Commission. The SDT provided clarifying explanations to illustrate that conflicts are not actually present.

Stakeholders made numerous comments and suggestions resulting in substantial changes to the draft Standard, the Supplemental Reference Document, the FAQs, and minor changes to the draft Implementation Plan.

If you feel that your comment has been overlooked, please let us know immediately. Our goal is to give every comment serious consideration in this process! If you feel there has been an error or omission, you can contact the Vice President and Director of Standards,

Gerry Adamski, at 609-452-8060 or at gerry.adamski@nerc.net. In addition, there is a NERC Reliability Standards Appeals Process.[1]

---

[1] The appeals process is in the Reliability Standards Development Procedures: http://www.nerc.com/standards/newstandardsprocess.html.

Index to Questions, Comments, and Responses

1. The SDT proposes to change the name of the draft standard from "Protection System Maintenance and Testing" to "Protection System Maintenance", and to include testing as one component of "Protection System Maintenance Program", which will be a defined term. Do you agree? If not, please explain in the comment area. 11

2. Within Table 1a, Table 1b, and Table 1c, the draft standard establishes specific minimum maintenance activities for the various types of devices defined within the definition of "Protection System". Do you agree with these minimum maintenance activities? If not, please explain in the comment area. 18

3. Within Table 1a, the draft standard establishes maximum allowable maintenance intervals for the various types of devices defined within the definition of "Protection System", where nothing is known about the in-service condition of the devices. Do you agree with these intervals? If not, please explain in the comment area. 58

4. Within Tables 1b and 1c, the draft standard establishes parameters for condition-based maintenance, where the condition of the devices is known by means of monitoring within the substation or plant and the condition is reported. Do you agree with this approach? If not, please explain in the comment area. 84

5. Within PRC-005 Attachment A, the draft standard establishes parameters for performance-based maintenance, where the historical performance of the devices is known and analyzed to support adjustment of the maximum intervals. Do you agree with this approach? If not, please explain in the comment area. 94

6. The SDT has provided a "Supplementary Reference Document" to provide supporting discussion for the Requirements within the standard. Do you have any comments on the Supplementary Reference Document? Please explain in the comment area. 102

7. The SDT has provided a "Frequently-asked Questions" document to address anticipated questions relative to the standard. Do you have any comments on the FAQ? Please explain in the comment area. 115

8. If you are aware of any conflicts between the proposed standard and any regulatory function, rule, order, tariff, rate schedule, legislative requirement, or agreement please identify the conflict here. 129

9. If you are aware of the need for a regional variance or business practice that we should consider with this project, please identify it here. 135

10. If you have any other comments on this standard that you have not already provided in response to the prior questions, please provide them here. 140

The Industry Segments are:

1 — Transmission Owners
2 — RTOs, ISOs
3 — Load-serving Entities
4 — Transmission-dependent Utilities
5 — Electric Generators
6 — Electricity Brokers, Aggregators, and Marketers
7 — Large Electricity End Users
8 — Small Electricity End Users
9 — Federal, State, Provincial Regulatory or other Government Entities
10 — Regional Reliability Organizations, Regional Entities

		Commenter	Organization	Industry Segment									
				1	2	3	4	5	6	7	8	9	10
1.	Group	Joe Spencer - SERC staff	SERC Protection and Controls Sub-committee (PCS)										X

	Additional Member	Additional Organization	Region	Segment Selection
1.	Paul Nauert	Ameren Services Co.	SERC	1, 3, 5
2.	Rick Conner	E.ON Services Inc.	SERC	1, 3, 5, 6
3.	Charles Fink	Entergy	SERC	1, 3, 5, 6
4.	Phil Winston	Georgia Power Co.	SERC	1, 3, 5
5.	Steve Waldrep	Georgia Power Co.	SERC	1, 3, 5
6.	Jay Farrington	PowerSouth Energy Coop.	SERC	1, 3, 5, 6
7.	Jerry Blackley	Progress Energy Carolinas	SERC	1, 3, 5, 6
8.	Marion Frick	South Carolina Electric and Gas Co.	SERC	1, 3, 5, 6
9.	Bridget Coffman	South Carolina Public Service Auth.	SERC	1, 3, 5, 6
10.	George Pitts	TVA	SERC	1, 9, 3, 5
11.	Ron Broocks	Va.Electric and Power Co.	SERC	1, 3, 5
12.	Joe Spencer	SERC Reliability Corp	SERC	10

		Commenter	Organization	Industry Segment									
				1	2	3	4	5	6	7	8	9	10
2.	Group	Rick Shackleford	Green Country Energy LLC					X					

	Additional Member	Additional Organization	Region	Segment Selection
1.	Danny Parish		SPP	5
2.	Ron Zane		SPP	5
3.	Dennis Bradley		SPP	5
4.	Mike Anderson		SPP	5
5.	Greg Froehling		SPP	5

3.	Group	Guy Zito	Northeast Power Coordinating Council										X

	Additional Member	Additional Organization	Region	Segment Selection
1.	Ralph Rufrano	New York Power Authority	NPCC	5
2.	Alan Adamson	New York State Reliability Council, LLC	NPCC	10
3.	Gregory Campoli	New York Independent System Operator	NPCC	2
4.	Roger Champagne	Hydro-Quebec TransEnergie	NPCC	2
5.	Kurtis Chong	Independent Electricity System Operator	NPCC	2
6.	Sylvain Clermont	Hydro-Quebec TransEnergie	NPCC	1
7.	Manuel Couto	National Grid	NPCC	1
8.	Chris de Graffenried	Consolidated Edison Co. of New York, Inc.	NPCC	1
9.	Brian D. Evans-Mongeon	Utility Services	NPCC	8
10.	Mike Garton	Dominion Resources Services, Inc.	NPCC	5
11.	Brian L. Gooder	Ontario Power Generation Incorporated	NPCC	5
12.	Kathleen Goodman	ISO - New England	NPCC	2
13.	David Kiguel	Hydro One Networks Inc.	NPCC	1
14.	Michael R. Lombardi	Northeast Utilities	NPCC	1
15.	Greg Mason	Dynegy Generation	NPCC	5
16.	Bruce Metruck	New York Power Authority	NPCC	6
17.	Chris Orzel	FPL Energy/NextEra Energy	NPCC	5
18.	Robert Pellegrini	The United Illuminating Company	NPCC	1

	Commenter	Organization	Industry Segment									
			1	2	3	4	5	6	7	8	9	10
19. Michael Schiavone	National Grid	NPCC 1										
20. Peter Yost	Consolidated Edison Co. of New York, Inc.	NPCC 3										
21. Gerry Dunbar	Northeast Power Coordinating Council	NPCC 10										
22. Lee Pedowicz	Northeast Power Coordinating Council	NPCC 10										
23. Randy MacDonald	New Brunswick System Operator	NPCC 2										
4. Group	Jalal Babik	Electric Market Policy	X		X		X	X				
Additional Member	**Additional Organization**	**Region**	**Segment Selection**									
1. Louis Slade		SERC	6									
2. Mike Garton		NPCC	5									
3. John Loftis	Electric Transmission	SERC	1									
4. Ron Broocks	Electric Transmission	SERC	1									
5. Group	Richard Kafka	Pepco Holdings Inc. - Affiliates	X		X		X	X				
Additional Member	**Additional Organization**	**Region**	**Segment Selection**									
1. Carlton Bradshaw	Atlantic City Electric	RFC	1									
2. Ken Lehberger	Atlantic City Electric	RFC	1									
3. Randal Coleman	Delmarva Power & Light	RFC	1									
4. Guy Eberwein	Delmarva Power & Light	RFC	1									
5. Walt Blackwell	Potomac Electric Power Co	RFC	1									
6. Group	David A Szulczewski	Detroit Edison			X	X	X					
Additional Member	**Additional Organization**	**Region**	**Segment Selection**									
1. David A Szulczewski	Detroit Edison	RFC										
2. Raju J Vengalil	Detroit Edison	RFC										

		Commenter	Organization	Industry Segment									
				1	2	3	4	5	6	7	8	9	10
7.	Group	Kenneth D. Brown	Public Service Enterprise Group Companies	X		X		X	X				

	Additional Member	Additional Organization	Region	Segment Selection
1.	Scott Slickers	PSEG Power Connecticut	NPCC	5
2.	Clint Bogan	PSEG Fossil LLC	ERCOT	5
3.	James Hebson	PSEG ER&T LLC	RFC	6
4.	James Hubertus	PSE&G	RFC	1, 3

8.	Group	Denise Koehn	Bonneville Power Administration	X		X		X	X				

	Additional Member	Additional Organization	Region	Segment Selection
1.	Dean Bender	SPC Technical Svcs	WECC	1
2.	Mason Bibles	Sub Maint and HV Engineering	WECC	1
3.	Laura Demory	PSC Technical Svcs	WECC	1

9.	Group	Sam Ciccone	FirstEnergy	X		X	X	X	X				

	Additional Member	Additional Organization	Region	Segment Selection
1.	Doug Hohlbaugh	FE	RFC	
2.	Jim Kinney	FE	RFC	
3.	Eric Schock	FE	RFC	
4.	Allen Morinec	FE	RFC	
5.	Ken Dresner	FE	RFC	
6.	Bill Duge	FE	RFC	
7.	Art Buanno	FE	RFC	
8.	Brian Orians	FE	RFC	
9.	Jim Detweiler	FE	RFC	
10.	Ken Bunting	FE	RFC	

10.	Group	Carol Gerou	MRO NERC Standards Review Subcommittee										X

	Additional Member	Additional Organization	Region	Segment Selection

		Commenter	Organization	Industry Segment									
				1	2	3	4	5	6	7	8	9	10
1. Joe DePoorter		Madison Gas & Electric	MRO 3, 4, 5, 6										
2. Neal Balu		WPS Corporation	MRO 3, 4, 5, 6										
3. Terry Bilke		Midwest ISO Inc.	MRO 2										
4. Ken Goldsmith		Alliant Energy	MRO 4										
5. Jodi Jenson		Western Area Power Administration	MRO 1, 6										
6. Terry Harbour		MidAmerican Energy Company	MRO 1, 3, 5, 6										
7. Joseph Knight		Great River Energy	MRO 1, 3, 5, 6										
8. Alice Murdock		Xcel Energy	MRO 1, 3, 5, 6										
9. Scott Nickels		Rochester Public Utilties	MRO 4										
10. Dave Rudolph		Basin Electric Power Cooperative	MRO 1, 3, 5, 6										
11. Eric Ruskamp		Lincoln Electric System	MRO 1, 3, 5, 6										
11.	Group	Deborah Schaneman	Platte River Power Authority Maintenance Group	X		X		X					
Additional Member		**Additional Organization**	**Region** **Segment Selection**										
1. Scott Rowley		Platte River Power Authority	WECC 7										
2. Gary Whittenberg		Platte River Power Authority	WECC 7										
12.	Individual	James Starling	SCE&G	X		X		X	X				
13.	Individual	Rick Koch	Nebraska Public Power District	X		X		X					
14.	Individual	Kasia Mihalchuk	Manitoba Hydro	X		X		X	X				
15.	Individual	Kristina Loudermilk	ENOSERV								X		
16.	Individual	Wade Davis	Otter Tail Power	X									
17.	Individual	Alison Mackellar	Exelon Generation Company, LLC - Exelon Nuclear					X					

		Commenter	Organization	Industry Segment									
				1	2	3	4	5	6	7	8	9	10
18.	Individual	Benjamin Church	NextEra Energy Resources					X					
19.	Individual	Scott Berry	Indiana Municipal Power Agency				X						
20.	Individual	John E. Emrich	Indianapolis Power & Light Co.	X				X					
21.	Individual	Glenn Hargrave	CPS Energy	X		X		X					
22.	Individual	Darryl Curtis	Oncor Electric Delivery	X									
23.	Individual	Sandra Shaffer	PacifiCorp	X		X		X	X				
24.	Individual	Armin Klusman	CenterPoint Energy	X									
25.	Individual	Howard Gugel	Progress Energy	X		X		X					
26.	Individual	John Moraski	BGE	X		X							
27.	Individual	Dale Fredrickson	Wisconsin Electric			X	X	X					
28.	Individual	Frank Gaffney	Florida Municipal Power Agency, and its Member Cities as follows: New Smyrna Beach; City of Vero Beach; and Lakeland Electric	X		X			X				
29.	Individual	Russell C Hardison	TVA	X									
30.	Individual	Kirit Shah	Ameren	X		X		X	X				
31.	Individual	Huntis Dittmar	Lower Colorado River Authority	X									
32.	Individual	Brandy A. Dunn	Western Area Power Administration	X									

		Commenter	Organization	Industry Segment									
				1	2	3	4	5	6	7	8	9	10
33.	Individual	Robert Casey	Operations and Maintenance	X									
34.	Individual	Hugh Francis	Southern Company	X		X		X					
35.	Individual	Daniel J. Hansen	RRI Energy					X					
36.	Individual	Silvia Parada-Mitchell	Transmission Owner	X					X				
37.	Individual	Greg Mason	Dynegy					X					
38.	Individual	Michael Ayotte	ITC Holdings	X									
39.	Individual	Robert Waugh	Ohio Valley Electric Corp.	X				X					
40.	Individual	Brent Ingebrigtson	E.ON U.S.	X		X		X	X				
41.	Individual	Danny Ee	Austin Energy	X									
42.	Individual	John Alberts	Wolverine Power Supply Cooperative, Inc.	X		X		X					
43.	Individual	Willy Haffecke	City Utilities of Springfield, MO	X		X		X					
44.	Individual	Charles J. Jensen	JEA	X		X		X					
45.	Individual	Greg Rowland	Duke Energy	X		X		X	X				
46.	Individual	Bob Thomas	Illinois Municipal Electric Agency				X						
47.	Individual	Scott Barfield-McGinnis	Georgia System Operations Corporation			X	X						
48.	Individual	Jianmei Chai	Consumers Energy Company			X	X	X					
49.	Individual	Vladimir Stanisic	Ontario Power Generation					X	X				

		Commenter	Organization	Industry Segment									
				1	2	3	4	5	6	7	8	9	10
50.	Individual	James H. Sorrels, Jr.	AEP	X		X		X	X				
51.	Individual	Jason Shaver	American Transmission Company	X									
52.	Individual	Edward Davis	Entergy Services, Inc	X		X		X	X				
53.	Individual	W. Guttormson	Saskatchewan Power Corporation	X		X							
54.	Individual	Alice Murdock	Xcel Energy	X		X		X	X				
55.	Individual	Martin Bauer	US Bureau of Reclamation					X				X	

1. The SDT proposes to change the name of the draft standard from "Protection System Maintenance and Testing" to "Protection System Maintenance", and to include testing as one component of "Protection System Maintenance Program", which will be a defined term. Do you agree? If not, please explain in the comment area.

Summary Consideration: The majority of the respondents agreed with both the change in the name of the draft standard and with the definition of Protection System Maintenance Program. Some comments were offered, most of which were answered by explanation of the rationale of the SDT.

Organization	Yes or No	Question 1 Comment
US Bureau of Reclamation	No	1. The alteration of the program to include testing as a component does not add value to system reliability. The existing requirement can only be completed with procedures that some of the elements listed under the program. The proposed program is far too restrictive in the manner in which it requires specific actions and thereby excludes others. 2. The program element for monitoring is listed; however, the monitoring is intended to be used through an electronic subsystem and does not allow for observations by experienced technical staff. 3. Testing is listed; however, the definition is limited to the application of signals and precludes other procedures. 4. Further, the definition of Protection System proposed is a nested definition which tends to expand the number of devices covered (any device that has voltage and current sensing inputs) irrespective of their impact on the BPS.

Response: The SDT thanks you for your comments.

1. **Maintenance includes a number of actions, one of which is testing; inspections, etc are also part of maintenance. One option is to separately identify each type of activity, another is to combine the types of activities within the overall Maintenance activity and address the specific activity type where relevant. As for including some activities and excluding others, the listed activities are contemplated as minimum activities and do not preclude an entity from performing additional activities.**
2. **If a facility is attended, the observation of locally-alarmed conditions by on-site personnel, within the time intervals expressed in the monitoring attributes, can satisfy these requirements. Adequate documentation should be available that the facility is indeed attended, and that the on-site personnel observe the related items. See FAQ V-1-D (page 30)**
3. **Nothing is precluded; minimum activities are specified, and entities may use additional approaches.**
4. **This concern is addressed by the applicability of the standard, where the applicability is limited to "Protection Systems that are applied on, or are**

Organization	Yes or No	Question 1 Comment
designed to provide protection for the BES".		
Wolverine Power Supply Cooperative, Inc.	No	Wolverine Power has concern about the level of "prescription" in this standard draft. The intent of the standards is to define what, not how. This draft gets unnecessarily prescriptive in our opinion, particularly in the table
Response: The SDT thanks you for your comments. The SDT believes that the level of prescription within the standard is necessary to satisfy the guidance in FERC Order 693, and also to address observations from the Compliance Monitoring entities (the Regional Entities and NERC) that PRC-005-1 is excessively general. FERC Order 672 also specifies that NERC Standards should be clear and unambiguous. The SDT has therefore defined the minimum activities necessary to implement an effective PSMP.		
AEP	Yes	
American Transmission Company	Yes	
Austin Energy	Yes	
Bonneville Power Administration	Yes	
City Utilities of Springfield, MO	Yes	
Consumers Energy Company	Yes	
CPS Energy	Yes	
Detroit Edison	Yes	
Duke Energy	Yes	
Dynegy	Yes	
ENOSERV	Yes	
Entergy Services, Inc	Yes	

Organization	Yes or No	Question 1 Comment
Florida Municipal Power Agency, and its Member Cities	Yes	
Georgia System Operations Corporation	Yes	
Green Country Energy LLC	Yes	
Illinois Municipal Electric Agency	Yes	
Indiana Municipal Power Agency	Yes	
Indianapolis Power & Light Co.	Yes	
ITC Holdings	Yes	
Lower Colorado River Authority	Yes	
Manitoba Hydro	Yes	
Nebraska Public Power District	Yes	
NextEra Energy Resources	Yes	
Northeast Power Coordinating Council	Yes	
Ohio Valley Electric Corp.	Yes	
Oncor Electric Delivery	Yes	
Ontario Power Generation	Yes	
Operations and Maintenance	Yes	

Organization	Yes or No	Question 1 Comment
Otter Tail Power	Yes	
PacifiCorp	Yes	
Pepco Holdings Inc.	Yes	
Platte River Power Authority Maintenance Group	Yes	
Progress Energy	Yes	
Public Service Enterprise Group Companies	Yes	
RRI Energy	Yes	
Southern Company	Yes	
Transmission Owner	Yes	
TVA	Yes	
Western Area Power Administration	Yes	
Wisconsin Electric	Yes	
Xcel Energy	Yes	
FirstEnergy	Yes	Although we agree with the change in the title of the standard, as well as the proposed definition of "Protection System Maintenance Program", we feel that the definition could be clarified. With regard to "Restoration", which at present is described as "The actions to restore proper operation of malfunctioning components", it may be helpful to add examples of acceptable actions to restore operations, such as calibration, repair, replacement, etc.

Organization	Yes or No	Question 1 Comment
Response: The SDT appreciates your support and comments. An FAQ document is included that addresses your comment related to an example of acceptable operations to restore operations. See FAQ II-2-B. (page 5)		
JEA	Yes	Generally agree; however, some suggestions for possible changes: 1) change "associated communication systems necessary for correct operation of protective devices" to "protective relays", 2) add a PSMP glossary definition for an acceptable type of monitored alarm, either to the proposed "PSMP monitor" or another definition for "PSMP monitored and alarmed." The SDT did a good job of making the overall Protection System definition clearer.
Response: The SDT appreciates your support and comments. **1) "Protective relays" is too specific a term here; it excludes applications such as logic-based direct transfer trip that provides protective functions.** **2) The SDT disagrees that the proposed definition is necessary. Guidance on this issue is included in the FAQ. See FAQ V-1-A (page 28)**		
MRO NERC Standards Review Subcommittee	Yes	N/A
Exelon Generation Company, LLC	Yes	None
Saskatchewan Power Corporation	Yes	Saskatchewan would like clarification of what the expectations and rationale are for including Restoration in the PSMP. The other terms listed under the PSMP definition represent what we would consider as typical relay maintenance activities. We would typically consider Restoration as an Operational activity. The existing NERC standards seem to treat this as an Operator concern addressed in PRC-001 R2.1 and R2.2 (The Operator shall take corrective action as soon as possible). If Restoration is included in PRC-005 doesn't PRC-001 have to be modified as well to remove these references? Saskatchewan would also like clarification on the term upkeep. Is the standard prescriptive and mandate the application of the latest firmware upgrades within a defined period, or is it flexible and can upgrades be applied as the utility deems necessary?
Response FAQ II-2-B (page 5) explains that restoration is the "corrective activities necessary to assure that the component is returned to working order following the discovery of its failure or malfunction" and provides extensive discussion contrasting "restoration" in this context from "restoration" in a system operations context. Examples are also discussed. Note that the word, 'restoration' is capitalized in the definition, but this capitalization is for consistent format by capitalizing the first letter of each word in each bulleted phrase – the word was not capitalized to show that		

Organization	Yes or No	Question 1 Comment
the term is using the approved definition of 'Restoration.'		
SCE&G	Yes	The SDT is to be commended for developing a clear and well documented draft. Overall it provides a balanced view of Protection System Maintenance, and good justification for its maximum intervals.
Response: The SDT appreciates your support.		
Ameren	Yes	1. We commend the SDT for developing such a clear and well documented first draft. It generally provides a well reasoned and balanced view of Protection System Maintenance, and good justification for its maximum intervals. Our existing M&T Program has and continues to yield a very reliable BES with mostly similar intervals, though some are longer and others shorter. We strongly support the almost all of the applicability revision, which clarifies the boundary of NERC maintenance and testing oversight. 2. We question the addition of UFLS station DC Supply, auxiliary relays, and Generating facility system-connected station service transformers. Have these components been a significant source of problems leading to cascading outages? 3. The SDT also modifies the Protection System definition, mostly clarifying the boundaries. We generally agree except that we recommend adding "fault" before "interrupting devices".
Response: **1. The SDT appreciates your support and comments.** **2. The standard is not focused only on causes of "cascading outages"; it is focused on "Protection Systems that are applied on, or are designed to provide protection for the BES" and on maintenance of the UFLS systems. The components addressed in the comment are all part of the BES, or the UFLS. As for the DC supply to the UFLS, it is a component that is necessary for the UFLS to function properly. FAQ II-4-D (page 11) discusses what auxiliary tripping relays are actually included, and FAQ III-2-A (page 20) provides a discussion of station service (auxiliary) transformers and their inclusion in this standard.** **3. The "Interrupting devices" is a term that addresses the actions of UFLS, UVLS, and SPS, as well as the actions to clear faults.**		
Electric Market Policy	Yes	We commend the SDT for developing such a clear and well documented first draft. In general, it provides a well reasoned and balanced view of Protection System Maintenance.
Response: The SDT appreciates your support.		
SERC (PCS)	Yes	We commend the SDT for developing such a clear and well documented first draft. It generally provides a well reasoned and balanced view of Protection System Maintenance, and good justification for its maximum

Organization	Yes or No	Question 1 Comment
		intervals.
Response: The SDT appreciates your support		
AECI	Yes	
Puget Sound Energy	Yes	

2. Within Table 1a, Table 1b, and Table 1c, the draft standard establishes specific minimum maintenance activities for the various types of devices defined within the definition of "Protection System". Do you agree with these minimum maintenance activities? If not, please explain in the comment area.

Summary Consideration: Most of the respondents disagreed with the minimum maintenance activities to some degree or another. The disagreement ranged over the full spectrum of activities specified in the Tables, resulting in numerous changes to the standard in response to comments.

Organization	Yes or No	Question 2 Comment
ITC Holdings	No	1. (FAQ 3C) What is the technical justification for omitting insulation testing of the wiring for DC control, potential and current circuits between the station-yard equipment and the relay schemes? We feel this wiring is susceptible to transients which, over time, may compromise the insulation, and therefore should be tested. 2. 2. Table 1a (Page 6) Improve wording. Suggestion: "Verify proper functioning of the current and voltage circuits from the voltage and current sensing devices to the protective relay inputs" 3. On Page 6: The red light monitors trip circuit not only trip coil. With only one circuit going to three parallel single-pole trip coils a red light will not detect a single open trip coil. Is a station inspection that verifies the red light is "on" an acceptable activity? 4. On Page 9: The 3 month communications maintenance activities should say that the channel needs to be checked. For example: initiate a manual checkback test of the carrier system. 5. On Page 10: Not clear on level 2 monitoring attributes for protective relay component description. As written it notes two separate requirements which are ambiguous. We assume that all monitoring noted is required (internal self diagnosis and waveform sampling)? 6. On Page7: The standard should note that battery testing must include all batteries that are used in protective relay systems (for example pilot wire batteries).
Response: The SDT thanks you for your comments. **1. The SDT does not believe that insulation testing needs to be included within the minimum required maintenance activities; the SDT is not aware of a body of evidence that suggests that these tests should be included as a requirement. The proposed standard does not prevent an entity from including such tests in its program if its experience indicates that such testing is needed.** **2. The SDT has modified the standard in consideration of your suggestion and the suggestions of others as shown:**		

Organization	Yes or No	Question 2 Comment
Verify proper functioning of the current and voltage circuit signals necessary for Protection System operation from the voltage and current sensing devices to the protective relays. **3. The SDT has modified the standard to remove the requirement cited in this comment as shown below:** **4. The SDT has modified the standard in consideration of your suggestion as shown below:** Verify that the Protection System communications system is functional. **See FAQ II-6-B for suggestions related to methodology.** **5. Yes. For level 2 monitoring, all attributes must be satisfied. The SDT has modified the standard to clarify as shown below:** Includes: • Internal self diagnosis and alarm capability • Alarm must assert for power supply failures. • Input voltage or current waveform sampling three or more times per power cycle • Conversion of samples to numeric values for measurement calculations by microprocessor electronics that are also performing self diagnosis and alarming. **6. The proper functioning of such batteries will be addressed by the verification and monitoring of the communications system, and by addressing maintenance correctable issues related to the communications system.**		
Green Country Energy LLC	No	1) Protection System Control Circuitry (Trip Circuits) (except for UFLS or UVLS) also The maintenance activity causes excessive breaker operation, and the intrusive nature increases the risk of subsequent misoperations on operating units. System configuration of many plants will require an extensive interruption of total plant production to complete the test. 2) Protection System Control Circuitry (Trip Circuits) (UFLS or UVLS systems only) The maintenance activity causes excessive breaker operation, and the intrusive nature increases the risk of subsequent misoperations on operating units. System configuration of many plants will require an extensive interruption of total plant production to complete the test.
Response: The SDT thanks you for your comments. **1. The overall Protection System Control Circuitry can be addressed in segments, as long as all portions are verified or tested as required. Depending on the arrangement of the DC control circuit, it may be necessary to only trip the breaker itself once. See FAQ II-4-E. (page 11)** **2. The overall Protection System Control Circuitry can be addressed in segments, as long as all portions are verified or tested as required.**		

Organization	Yes or No	Question 2 Comment
Depending on the arrangement of the DC control circuit, it may be necessary to only trip the breaker itself once. See FAQ II-4-E. (page 11)		
Public Service Enterprise Group Companies	No	1) Table 1a Protection System Control Circuitry (Trip Circuits) (UFLS/UVLS Systems Only). Currently, we test our UFLS relays on a 2 year maintenance interval. We test the relays and associated DC circuitry up to the DC lockout relays. It would require extraordinary effort to trip the breakers directly when performing these tests. Usually, each UFLS relay will trip several feeder breakers. This requirement states that we need to check the trip coil for each of those breakers each time we perform relay maintenance. This will add an unreasonable amount of time and effort to reliably switch out several 4kV or 13kV feeders every time we perform UFLS maintenance. For UFLS and UVLS schemes, we feel the requirement for DC control testing should not go past the lockout relay. The standard says to perform trip checks at the same time as UF maintenance. We test the relays on a 2 year interval right now. It is unreasonable to perform trip checks this often. The trip checks should follow a 6 year span (or longer) just like the BES equipment. 2) Table 1a DC supply. The 18 month inspection requires a measurement of specific gravity and temperature. We believe that if a battery owner opts to perform an 18 month ohmic value test, this combined with the cell voltage readings and continuity tests will give a good indication of battery health. We do not feel that the measurement of specific gravity is required in conjunction with the tests performed above.
Response: The SDT thanks you for your comments. **1. The SDT has modified the standard in consideration of your comment as shown below:** Perform a complete functional trip test that includes all sections of the Protection System control and trip circuits, including all electromechanical trip and auxiliary contacts essential to proper functioning of the Protection System, except that verification does not require actual tripping of circuit breakers or interrupting devices. **See FAQ II-8-D (page 19) for a discussion on this.** **2. The SDT has modified the standard in consideration of your comment and this has been deleted.**		
Wisconsin Electric	No	1. Page 7 Station DC Supply (Batteries): The activity to verify proper electrolyte level should only apply to unstaffed (unmanned) stations; checking battery electrolyte levels is routinely done in generating stations, which are staffed with personnel continuously (24 x 7). In addition, the three activities listed here with a 3 month interval for batteries (electrolyte, voltage, grounds) should NOT require documentation for compliance purposes. It should be sufficient that these routine and recurring activities (every 3 months) are identified in the Maintenance Plan. Otherwise the administrative burden to provide documentation will become excessive and counterproductive to assuring BES reliability. 2. Page 7 Station DC Supply (Batteries): The 18 month interval includes an activity to verify the battery charger equalize voltage. This activity is normally done only when the bank is load tested. Therefore the

Organization	Yes or No	Question 2 Comment
		activity to verify equalize voltage of a charger should have a 6 year interval along with the other battery charger activities to verify full rated current and current-limiting. 3. Page 9 Communications Equipment: Similar to #1 above, the activity to verify monitoring and alarms should NOT require documentation in order to demonstrate compliance. Having these routine 3 month activities in the Maintenance Plan is sufficient. This needs to be clarified in the standard. Also, this requirement should be re-worded to refer to generating stations also, not just substations. 4. Page 11 Station DC Supply (Batteries): Like #1 above, the similar requirement in Table 1b for verifying battery electrolyte levels should be revised to indicate that documentation is NOT required. 5. Page 6 Prot System Control Circuitry: Like #1 above, the 3 month activity to verify continuity of breaker trip circuits is fine, but there should be no requirement to document the readings or observations; it is sufficient that this activity be addressed in the Maintenance Plan, especially for staffed generating stations. 6. Page 6 Prot System Control Circuitry: For the 6 year activity to "perform a functional trip test...": is this a requirement to actually trip the circuit breaker ? If yes, this should be stated clearly in the Maintenance Activity description. 7. We are concerned that the Maintenance Activities are not appropriate for certain equipment. The RFC definition of Bulk Electric System includes any protection equipment that can trip a BES facility independent of voltage level. As an LSE, this includes distribution-level equipment that was not designed to the same level of redundancy as Transmission equipment. Complying with the requirements for control circuitry functional testing and current sensing device testing will actually decrease system reliability since this often cannot be accomplished without requiring outages to major distribution system components and/or temporarily breaking protection circuits. We propose that this type of testing on distribution systems which fall under the definition of BES Protection Systems should be addressed separately from the rest of the BES Protection Systems in this standard. The intervals and/or maintenance activities should reflect the differences in how these distribution protection systems are designed and operated.

Response: The SDT thanks you for your comments.

1. **The SDT has modified the standard in consideration of your comment. The revised standard requires the responsible entity to "check" the following every 3 calendar months:**
   - Electrolyte level (excluding valve-regulated lead acid batteries)
   - Station dc supply voltage
   - Unintentional grounds

2. The SDT has modified the standard in consideration of your comments regarding DC supply and the reference to "equalize voltages" has been

Organization	Yes or No	Question 2 Comment
removed **3. The word "substation" has been removed from this requirement. Documentation of completion of required maintenance activities will likely be necessary to demonstrate compliance.** **4. The SDT has modified the standard in consideration of your comments to require checking of electrolyte levels, instead of verification. Documentation of completion of required maintenance activities will likely be necessary to demonstrate compliance.** **5. The SDT has modified the standard to remove the requirement cited in your comment.** **6. Yes. The intent here is that the entire dc control circuit, including the breaker trip coil, be exercised. This was changed to read as follows:** Perform a complete functional trip test that includes all sections of the Protection System control and trip circuits, including all electromechanical trip and auxiliary contacts essential to proper functioning of the Protection System. **7. As established in 4.2.1, this standard applies to all Protection Systems that are "Protection Systems that are applied on, or are designed to provide protection for the BES".**		
Exelon Generation Company, LLC	No	1. Minimum maintenance activities should be on a yearly multiplier verses a monthly multiplier. Nuclear generating stations are typically on an 18-month or 24-month refueling cycle. The draft standard does not take into consideration a nuclear generators refueling cycle. Specifically, most Boiling Water Reactors (BWRs) are on a 24-month refueling cycle and may run continuously between refueling outages. Performing maintenance on-line puts the generating unit at risk without any commensurate increase in reliability to the bulk electric system. 2. All maintenance activities should include a "grace" period to allow for changes to a nuclear generator's refueling schedule and emergent conditions that would prevent the safe isolation of equipment and/or testing of function. "Grace" periods align with currently implemented nuclear generator's maintenance and testing programs. 3. Activities that begin with "verify" should be modified to "Validate…are/is within acceptable limits. Initiate corrective actions as required." For example, some levels of DC grounds are acceptable based on circuit design and component installation. Troubleshooting or ground isolation may increase the risk to the system depending on ground magnitude and conditions. 4. Please provide clarification on "verify that no dc supply grounds are present" most stations have some level of ground current. Should this be interpreted to be a measure of resistance or current values? Suggest rewording to say "Check and record unintentional battery grounds" 5. "Verify Station Battery Chargers provides the correct float and equalize voltage" should be deleted. Equalizing a battery is a maintenance function and should only be performed as needed. Suggest rewording

Organization	Yes or No	Question 2 Comment
		to say "Check and record charger output current and voltage." 6. Activities associated with Battery Charger performance should be deleted. The ability of the Battery Charger to maintain the battery at full charge state is verified by checking proper "float voltage." The ability to provide full rated current only affects the ability to recharge a battery AFTER an event has occurred. 7. In Table 1a does the requirement to "verify proper electrolyte level" refer to all batteries or only a sampling? Current practice is to use the "pilot cell" as the monitoring cell as this cell is usually the least healthy of the battery bank from a specific gravity and/or voltage standpoint. If the pilot cell continues to degrade then the other batteries will be monitored more often. Suggest rewording to "Check electrolyte level." 8. In Table 1a the 18-month requirement to measure that the specific gravity and temperature of each cell is within tolerance is "where applicable" what does "where applicable" mean? 9. For the Station dc supply (battery is not used) 18-month interval should this be interpreted that it is just the battery charger with no attached battery? Or a dc supply system that does not contain a battery? 10. Table 1a Station dc supply 18-month interval to verify cell-to-cell and terminal connection resistance is within "tolerance" should be revised to say "tolerance or acceptable limits." 11. Table 1a Station dc supply (that has as a component valve regulated lead-acid batteries) should provide an additional optional activity for "Total replacement of battery at an interval of four (4) years" in lieu of not conducting performance or service capacity test at maximum maintenance interval.

Response: The SDT thanks you for your comments.

1. The activities that are on an interval less than one calendar year are all “inspection” type activities, rather than “testing” activities. The SDT requests more specificity as to your concerns.

2. The SDT considered this issue when developing the intervals, and realizes that some entities may need to perform certain maintenance activities more frequently to assure that the activities are performed within the required intervals. Specifically, for generation facilities, there would seem to be numerous opportunities within the 6-year or longer intervals to perform the required maintenance during a scheduled plant outage, and maintenance with shorter intervals can be characterized as non-intrusive maintenance, more of an inspection than anything else; the SDT believes that this maintenance can be done on-line. The SDT is concerned that a “grace period”, if permitted, would be used to establish a de-facto longer interval, and that the established intervals would thus not be measurable. Additionally, FERC Order 693 directed that NERC establish maximum maintenance intervals, and allowing for a “grace period” would not conform to this directive. Please refer to Section 8.4 of the Supplementary Reference Document (page 13) and FAQ IV-2-D (page 23) for a discussion on this issue.

3. The SDT has modified the standard and Frequently Asked Questions document (See FAQ II-5-I, page 15) in consideration of your comments about dc grounds.

4. The SDT has modified the standard and Frequently Asked Questions document (See FAQ II-5-I, page 15) in consideration of your comments about

Organization	Yes or No	Question 2 Comment
no dc supply grounds being present. The language in the standard was changed to: Check for unintentional grounds **5. The SDT has modified the standard in consideration of your comments – the phrase, "equalize voltages," was deleted** **6. The performance of the battery charger is critical to the performance of the protection system. The SDT has modified the standard to simplify the requirements related to maintenance of the battery charger.** **7. The SDT has modified the standard in consideration of your comments. The Maintenance Activity related to electrolyte level of batteries has been changed from "verify proper" to "check" electrolyte levels. This Maintenance Activity refers to every individual cell in a non-VLRA station battery, similar to recommendations in the relevant IEEE Standards.** **8. The SDT has modified the standard in consideration of your comments. The requirement to measure that the specific gravity and temperature of each cell is within tolerance is "where applicable" has been deleted.** **9. The FAQ II-5-A (page 12) addresses your question concerning "Station dc supply (battery is not used)" by explaining that "a Station dc supply where a battery is not used" is a situation where another energy storage technology besides a battery is used prevent loss of the station dc supply when ac power to the station dc supply is lost.** **10. The SDT has modified the standard in consideration of your comments regarding cell-to-cell and terminal connection resistance – the phrase, "within tolerance" was deleted – and the requirement was subdivided to clarify that the entity must "verify battery terminal connection resistance and verify battery cell-to-cell connection resistance."** **11. The SDT believes that the maintenance activities specified in Table 1a for VRLA batteries are necessary to assure that the station battery will perform reliably and that replacement of the battery every four years in lieu of such testing would not provide such assurance. The SDT is providing the option of either capacity testing (every three years) or measuring individual cell/unit ohmic values (every three months) and trending the test results against the station battery's baseline to allow entities to choose which of these activities best address their facilities. Total replacement of a VRLA battery with a properly-performing new battery, 3 calendar years after installation of the original battery, is in compliance with Table 1a of this standard. See FAQ IV-2-A (page 22) & IV-2-B (page 23) for a discussion about commissioning tests and how they relate to establishing a baseline.**		
US Bureau of Reclamation	No	1. The basis for developing the maintenance intervals was adequately explained. It is understood that FERC would like uniform intervals; the intervals do not recognize the tremendous variation in installation and equipment and possibly manufacturer recommendation. Point in fact is the interval for listed for electromechanical relays. Some of these relays must be calibrated every year or three years on the outside. Relays that have a history of stable performance based on consistently good test results. 2. The intervals for battery maintenance are not reasonable. The capacity testing at 3 years is higher than the 5 year which battery manufactures require.
Response: The SDT thanks you for your comments. **1. The proposed standard does not prevent an entity from including such tests in their program if their experience has indicated that such testing is**		

Organization	Yes or No	Question 2 Comment
needed. **2. The 3-year capacity test is specifically for Valve Regulated Lead-Acid batteries (VRLA); Vented Lead-Acid batteries require a 6-year capacity test. Due to the failure mode and designed service life of Valve Regulated Lead-Acid (VRLA) batteries compared to a Vented Lead-Acid batteries, the SDT believes that extending capacity testing of a VRLA battery beyond the maximum maintenance interval of 3 calendar years in Table 1a cannot be justified regardless of what the battery manufacturers recommend.**		
MRO NERC Standards Review Subcommittee	No	A. In the tables, the term “verification” should be switched with “check”. B. The verification activities include testing for “specific gravity” in batteries. Since “impedance testing” will give you the same results or similar results; revise the tables to reflect this, as well. C. Another question deals with the table title verbiage. Table 1a and 1c are labeled as Protection Systems, while Table 1b is Protection System Components. One could interpret table 1c as saying that if any one component of the protection system in question is not in compliance with level 3 monitoring stipulations, then every component must be degraded to level 2 monitoring as so forth. This needs to be clarified. D. Some activities, such as complete functional testing, could lead to reduced levels of reliability, because [1] it requires removing elements of the transmission system from service and [2] it requires performing tests that are inherently prone to human errors. The MRO NSRS does not believe the perceived benefits justify the anticipated costs. E. In the tables, under Table 1a and Protection system communications equipment and channels, a technical justification should be provided to show that performance and quality channel testing would result in the reduction of regional disturbances and blackouts. Quality and performance testing is subjective. Subjective tests are inherently poor compliance measures. The requirements to measure, document, store, and prove channel quality data is a poor use of limited compliance resources. F. In the tables, under Table 1a and Station DC supply (and anywhere else), equalize (battery) voltages should be eliminated. Equalizing battery voltages reduces battery life and do not provide a significant gain in overall system reliability to offset the loss of battery life. G. In the tables, under Table 1a and Station DC supply (and anywhere else), delete the reference to measuring the fluid temperature of “each cell”. A technical basis should be demonstrated that shows why individual cell fluid temperature measurement would reduce the occurrence of regional disturbances. If fluid temperature measurement remains in the standard, a single fluid temperature measurement per battery bank should be sufficient to demonstrate that the battery bank was performing within normal parameters. The compliance burden to add fluid temperature measurements for each cell is unwarranted and reduces compliance personnel resources that could be utilized on more important reliability activities.

Organization	Yes or No	Question 2 Comment
Response: The SDT thanks you for your comments. **A. The SDT has modified the tables in consideration of your comments regarding "verification" vs. "checking".** **B. The SDT has modified the standard in consideration of your comments – the term, "specific gravity" is not used in the revised standard** **C. The SDT has modified Tables 1a and 1c in consideration of your comments. The subheading of Table 1a and 1c were modified, replacing, "Systems" with "System Components."** **D. To minimize system impact of such maintenance and possible errors, the maintenance necessarily should be scheduled at a time that minimizes the risks.** **E. Many utilities have long history that emphasizes that maintenance of communications systems is critical to assuring the proper performance of these systems. The intervals were determined based on the experiences of SDT and NERC System Protection and Task Force members. Additionally, this standard is not focused only on avoiding regional disturbances or blackouts, but instead on overall Protection System reliability. See Supplementary Reference Document, Section 15.5 (page 23) and FAQ II-6-D (page 17).** **F. The SDT has modified the standard in consideration of your comments. The requirement to "equalize battery voltages" was removed from the revised standard.** **G. The SDT has modified the standard in consideration of your comments and all references to measuring "temperature" have been removed from the revised standard.**		
CenterPoint Energy	No	a. CenterPoint Energy believes the approach taken by the SDT is overly prescriptive and too complex to be practically implemented. The inflexible minimum "maintenance activities" approach fails to recognize the harmful effects of over-maintenance and precludes the ability of entities to tailor their maintenance program based on their configurations and operating experience. In particular, the loss of maintenance flexibility embodied in this approach would have perverse consequences for entities with redundant systems. Entities with redundant systems have less need for maintenance of individual components (due to redundancy) yet have twice the maintenance requirements under the minimum "maintenance activities" approach. For example, Table 1A calls for performing a specific gravity test on "each cell" of vented lead-acid batteries. CenterPoint Energy believes such a requirement is dubious for entities that do not have redundant batteries, and absurd for entities that do. CenterPoint Energy has installed redundant batteries in most locations and has had an excellent operating history with batteries by using a combination of internal resistance testing and specific gravity testing of a single "pilot cell". This practice, combined with DC system alarming capability, has worked well. b. CenterPoint Energy is opposed to approving a standard that imposes unnecessary burden and reliability risk by imposing an overly prescriptive approach that in many cases would "fix" non-existent problems. To clarify this last point, CenterPoint Energy is not asserting that maintenance problems do not exist. However,

Organization	Yes or No	Question 2 Comment
		requiring all entities to modify their practices to conform to the inflexible approach embodied in this proposal, regardless of how existing practices are working, is not an appropriate solution. Among other things, requiring entities to modify practices that are working well to conform to the rigid requirements proposed herein carries the downside risk that the revised practices, made solely to comply with the rigid requirements, degrade reliability performance. c. Arguably, an entity could possibly return to its existing practices, if those practices are working well, by navigating through the complex set of options and supporting documentation that the SDT has crafted in this proposal. However, most entities have an army of substation technicians with various ranges of experience to perform maintenance on protection systems and other substation components. It is unrealistic to expect most entities making a good faith effort to comply with this proposal to have a full understanding throughout the entire organization of all the nuances crafted into this complex proposal. d. For the reasons outlined above, CenterPoint Energy does not agree with the proposal to specify minimum maintenance activities. However, if the majority of industry commenters agree with the SDT's proposal, CenterPoint Energy has concerns about some of the proposed tasks. For Protection System control circuitry (trip circuits), Table 1A calls for performing a complete functional trip test. The "Frequently-asked Questions" document states that this "may be an overall test that verifies the operation of the entire trip scheme at once, or it may be several tests of the various portions that make up the entire trip scheme". Such a requirement creates its own set of reliability risks, especially when monitoring already mitigates risks. CenterPoint Energy is concerned with this standard promoting an overall functional trip test for transmission protection systems. This type of testing can negatively impact reliability with the outages that are required and by exposing the electric system to incorrect tripping. CenterPoint Energy views overall functional trip testing as a commissioning task, not a preventive maintenance task. CenterPoint Energy performs such testing on new stations and whenever expansion or modification of existing stations dictates such testing. Overall, CenterPoint Energy recommends minimizing, to the extent possible, maintenance activities that disturb the protection system; that is, placing the protection system in an abnormal state in order to perform a test. e. For Protection System control circuitry (breaker trip coils only), Table 1A calls for verifying the continuity of the trip circuit every 3 months. CenterPoint Energy is not sure what would be the expected task to meet this requirement (it is not addressed in the "Frequently-asked Questions" document).
Response: The SDT thanks you for your comments. **a) The SDT believes that the level of prescription within the standard is necessary to satisfy the guidance in FERC Order 693, and also to address observations from the Compliance Monitoring entities (the Regional Entities and NERC) that PRC-005-1 is excessively general. FERC Order 672 also specifies that NERC Standards should be clear and unambiguous. Regardless of the level of redundancy provided, all components addressed by this standard must be maintained in accordance with the requirements of the standard. The SDT has therefore defined the minimum activities necessary to implement an effective PSMP. The SDT has modified the standard in consideration of your comments concerning performing a specific gravity test**		

Organization	Yes or No	Question 2 Comment
and the revised standard does not require a specific gravity test. **b)) The SDT believes that the level of prescription within the standard is necessary to satisfy the guidance in FERC Order 693, and also to address observations from the Compliance Monitoring entities (the Regional Entities and NERC) that PRC-005-1 is excessively general. FERC Order 672 also specifies that NERC Standards should be clear and unambiguous. The opportunities in R3 provide additional flexibilities for entities which desire them.** **c) For those entities which wish the least complex approach, a pure time-based program, using R1, R2, and R4, with Table 1a provides the simplest approach to meeting this standard.** **d) The SDT believes that functional trip testing is a key component of an effective PSMP.** **e) See the Supplemental Reference Document, Section 15.3 (page 22) for a discussion on this topic.**		
NextEra Energy Resources	No	a. Tables 1a, 1b & 1c should offer as an alternative, measuring battery float voltages and float currents in lieu of measuring specific gravities as described in Annex A4 of IEEE Std 450-2002. b. Inspection of CVT gaps, MOVs and gas tubes should be added to the communications equipment time based maintenance tables. Failure of the CVT protective devices may cause failure of the Protection System. c. Maintenance Activities for UVLS or UFLS station dc supplies shows “Verify proper voltage of dc supply”. Does this imply that, except for voltage readings of the dc supply, distribution battery banks are not maintained? d. Why does the Maintenance Activities for UVLS or UFLS relays state that verification does not require actual tripping of circuit breakers? e. Please clarify the Maintenance Activities for Voltage and Current Sensing Devices. Must voltage, current and their respective phase angles be measured at each discrete electromechanical relay? f. NextEra Energy concurs with other entities comments concerning this question: This entity believes the approach taken by the SDT is overly prescriptive and too complex to be practically implemented. The inflexible “minimum maintenance activities” approach fails to recognize the harmful effects of over-maintenance and precludes the ability of entities to tailor their maintenance program based on their configurations and operating experience. In particular, the loss of maintenance flexibility embodied in this approach would have perverse consequences for entities with redundant systems. Entities with redundant systems have less need for maintenance of individual components (due to redundancy) yet have twice the maintenance requirements under the “minimum maintenance activities” approach. For example, Table 1A calls for performing a specific gravity test on “each cell” of lead acid batteries. Our company believes such a requirement is dubious for entities that do not have redundant batteries, and absurd for entities that do. We have installed redundant batteries in most locations and have had an excellent operating history with batteries

Organization	Yes or No	Question 2 Comment
		by using a combination of internal resistance testing and specific gravity testing of a single "pilot cell". This practice, combined with DC system alarming capability, has worked well. We are opposed to approving a standard that imposes unnecessary burden and reliability risk by imposing an overly prescriptive approach that in many cases would "fix" non-existent problems. To clarify this last point, we are not asserting that maintenance problems do not exist. However, requiring all entities to modify their practices to conform to the inflexible approach embodied in this proposal, regardless of how existing practices are working, is not an appropriate solution. Among other things, requiring entities to modify practices that are working well to conform to the rigid requirements proposed herein carries the downside risk that the revised practices, made solely to comply with the rigid requirements, degrade reliability performance. Arguably, an entity could possibly return to its existing practices, if those practices are working well, by navigating through the complex set of options and supporting documentation that the SDT has crafted in this proposal. However, like many entities, we have an army of substation technicians with various ranges of experience to perform maintenance on protective systems and other substation components. It is unrealistic to expect most entities making a good faith effort to comply with this proposal to have a full understanding throughout the entire organization of all the nuances crafted into this complex proposal. For the reasons outlined above, we do not agree with the proposal to specify minimum maintenance activities. However, if the majority of industry commenters agree with the SDT's proposal, we have concerns about some of the proposed minimum tasks. For Protection System control circuitry (trip circuits), Table 1A calls for performing a complete functional trip test. The "Frequently-asked Questions" document states that this "may be an overall test that verifies the operation of the entire trip scheme at once, or it may be several tests of the various portions that make up the entire trip scheme". Such a requirement creates its own set of reliability risks, especially when monitoring already mitigates risks. We are concerned with this standard promoting an overall functional trip test for transmission Protection Systems. This type of testing can negatively impact reliability with the outages that are required and by exposing the electric system to incorrect tripping. Our company views overall functional trip testing as a commissioning task, not a preventive maintenance task. We perform such testing on new stations and whenever expansion or modification of existing stations dictates such testing.

Response: The SDT thanks you for your comments.

a. The SDT has modified the standard in consideration of your comments. All references to measuring specific gravities have been removed from the revised standard – and for Table 1a for station dc supply, the language was revised to require, "Verify float voltage of battery charger."

b. Power line carrier channels are made up of many components that must be maintained on a periodic basis. This standard indicates that adequate maintenance and testing must be done to keep the performance of the channel at a level that meets the requirements of the relay system. The determination of specific maintenance activities is the responsibility of the Entity.

c. This standard limits the maintenance requirements of distribution system batteries to those used for UVLS and UFLS and constrains those requirements to verification of proper voltage. If "distribution system" batteries are used for any other BES Protection System applications, they must

Organization	Yes or No	Question 2 Comment
be maintained according to the other requirements of this standard. **d. The SDT believes that the UFLS scheme is predominantly based within the distribution sector. As such, there are many circuit interrupting devices that will be operating for any given under-frequency event that require tripping for that event. A failure in the tripping-action of a single distribution breaker will be far less significant than, for example, any single Transmission Protection System failure such as a failure of a Bus Differential Lock-Out Relay. While many failures of these distribution breakers could add up to be significant, distribution breakers are operated often on just fault clearing duty and therefore the distribution circuit breakers are operated at least as frequently as any requirements that might have appeared in the standard.** **e. The requirement is that the proper voltage, current, and phase angle must be delivered to each respective relay. The standard does not prescribe methodology. See FAQ II-3-A (page 8) for further discussion.** **f. The SDT believes that the level of prescription within the standard is necessary to satisfy the guidance in FERC Order 693, and also to address observations from the Compliance Monitoring entities (the Regional Entities and NERC) that PRC-005-1 is excessively general. FERC Order 672 also specifies that NERC Standards should be clear and unambiguous. Regardless of the level of redundancy provided, all components addressed by this standard must be maintained in accordance with the requirements of the standard. The SDT has therefore defined the minimum activities necessary to implement an effective PSMP. The SDT has modified the standard in consideration of your comments concerning specific gravity testing.**		
E.ON U.S.	No	1. Capacity or AC impedance only needs to be done to determine service life and therefore periodic testing of station DC supply does not seem necessary or prudent. 2. If a company checks overall battery bank voltages quarterly then periodic testing of the battery bank charger should not be required.
Response: The SDT thanks you for your comments. **1. Capacity or Internal Ohmic testing must be periodically performed at the Maximum Maintenance Intervals in Table 1 to verify that a lead acid battery can perform as designed. Periodic testing to ensure that a battery can perform as designed is necessary to ensure that a battery is capable of being a dc source to the station dc loads when required. If a battery fails to perform as designed during test before its designed service life is reached it must be replaced regardless of how many years of service are left on its warranty or its engineered service life.** **2. Proper functioning of the battery charger is critical to proper performance of the DC supply. The SDT has modified the standard to simplify the battery charger maintenance requirements.**		
City Utilities of Springfield, MO	No	1. CU has concern over the battery charger testing requirements. Per the charger manufacturers recommendations there is no reason to test the chargers as proposed in PRC-005-2. It is their opinion that the chargers are self diagnostic and do not require these tests (full load current and current limiting tests). The charger O&M manuals do not even provide instructions for such tests as optional. Therefore, CU takes exception to this requirement and suggests that battery chargers be maintained and tested in accordance with manufacturer's recommendations.

Organization	Yes or No	Question 2 Comment
		2. Additionally, CU is concerned with the wording in Table 1a concerning Protection system communication equipment and channels. We are unsure what the maintenance activity actually means. If this is an unmonitored system, how can you verify the condition of the communication system? Is the standard referring to local monitoring such as enunciators? Please provide clarification.
Response: The SDT thanks you for your comments. 1. **The SDT has modified the standard in consideration of your comments. If the battery charger is self diagnostic, it may qualify for Table 1b or Table 1c.** 2. **FAQ II-6-A (page 16) provides an extensive discussion about various methods to test communications systems.**		
Florida Municipal Power Agency, and its Member Cities	No	1. FMPA does not believe that maintenance of each UFLS / UFLS systems are as important as maintenance of BES protection systems. The fundamental reason is that delayed or uncleared faults on the BES can cause system "instability, uncontrolled separation, and cascading outages"; therefore, BES protection systems are very important; however, if a small percentage of UFLS / UVLS relays mis-operate as a result of a frequency or voltage event, the impact of the mis-operation is much smaller, if even measurable. As a result, FMPA believes that the emphasis of the maintenance activities ought to be placed on those systems that can have the most impact on what the standards are all about, as Section 215(a)(4) of the Federal Power Act says, "avoiding instability, uncontrolled separation, and cascading outages". As a result, FMPA believes that full functional testing, while important for BES protection systems, is not necessary for UFLS and UVLS systems (Table 1a, page 6 and Table 1b, page 11). Because most UFLS / UVLS are on radial distribution feeders, such testing will cause outages to customers fed on radial distribution circuits and transmission lines without sufficient cause, in other words, the maintenance itself will reduce the reliability the customer experiences. In addition, distribution tripping circuits are more regularly exercised by distribution faults than are transmission tripping circuits; therefore, full functional testing of distribution tripping circuits is far less valuable than testing trip circuits of transmission elements which are exercised less frequently due to actual system events. 2. FMPA is confused with the wording of Table 1a, page 6, row 3 that talks about breaker trip coils. In the "Type of Component" column, the subject says "Breaker Trip Coils Only (except for UFLS or UVLS)", yet the maintenance activity described states "Verify the continuity of the breaker trip circuit including trip coil". These two statements are inconsistent because the first statement limits the applicability to just the trip coil and the second statement goes beyond the trip coil. And, FMPA believes the second statement should only apply to the trip coil, e.g., the second statement should say: "Verify the continuity of the trip coil". In addition, the parenthetical is confusing, is it meant to say that the continuity of the trip coil only needs to be verified when the breaker operates during the 3 month interval, or that the intended continuity check is from the relay contacts through the trip coil, and not from the relay contacts back to the

Organization	Yes or No	Question 2 Comment
		batteries? 3. FMPA is also confused concerning station DC supply testing. There are multiple rows in Table 1a concerning various types of testing for various types of batteries and chargers that do not exclude UVLS and UFLS, yet on page 8, on the bottom row, the row is exclusive to UVLS and UFLS yet overlaps other rows discussing station DC supply testing. Is it intended that the other rows that are silent as to what they apply to exclude UVLS and UFLS? FMPA believes that should be the case. The same comment applies to Table 1b. 4. FMPA also has concern over the battery charger testing requirements. Per the charger manufacturers recommendations there is no reason to test the chargers as proposed in PRC-005-2. It is their opinion that the chargers are self diagnostic and do not require these tests (full load current and current limiting tests). The charger O&M manuals do not even provide instructions for such tests as optional. Therefore, FMPA takes exception to this requirement and suggests that battery chargers be maintained and tested in accordance with manufacturer's recommendations
Response: The SDT thanks you for your comments. **1. The SDT believes that UFLS and UVLS maintenance needs to be prescriptive for the following reasons:** **a. PRC-008-0 and PRC-011-0 today require maintenance of UFLS and UVLS equipment.** **b. FERC Order 693 directs NERC to develop maximum allowable intervals for UFLS and UVLS equipment, and recommends combining PRC-005-1, PRC-008-0, PRC-011-0, and PRC-017-0.** **The objectives are not constrained to limiting "instability, uncontrolled separation, and cascading outages", but instead address overall Protection System reliability. The standard has, however, been modified to remove the requirement that the breakers actually be tripped for UFLS and UVLS functional trip testing.** **2. The SDT has modified the standard to remove the requirement cited in your comments.** **3. The SDT has modified the standard to clarify that the only DC Supply requirement relevant to UVLS and UFLS is to verify the DC supply voltage in consideration of your comments.** **4. The SDT has modified the standard in consideration of your comments. If the battery charger is self diagnostic, it may qualify for Table 1b or Table 1c.**		
Indiana Municipal Power Agency	No	IMPA does not agree with the battery charger testing requirements. Per the battery charger manual, the manufacturer sets the current limit at the factory, and it only needs to be adjusted if a lower current limit is desired. The manufacturer gives directions on how to lower the current limiter, and the directions seem to be for this purpose only (not for the sole purpose of performing a current limiter test). The manufacturer also

Organization	Yes or No	Question 2 Comment
		does not give directions on how to perform a full load current test and does not give any recommendation to the user that such test is needed. IMPA believes that both of these maintenance items are not needed to maintain the battery charger and that only the manufacturer's recommendations on maintenance and testing need to be followed.
Response: The SDT thanks you for your comments. The performance of the battery charger is critical to the performance of the protection system. The SDT has modified the standard to simplify the requirements related to maintenance of the battery charger.		
FirstEnergy	No	In general we agree with the maintenance activities, except for the specific gravity and temperature testing included in the "Station dc Supply (that has as a component any type of battery)" of the tables 1a and 1b. We only perform this testing at nuclear facilities for insurance requirements. In transmission substation applications it has been eliminated due to the variability of results due to recharging/equalizing, water addition, temperature correction requirements, etc. In the Supplementary reference, section 15.4 Batteries and DC Supplies, third paragraph, the SDT indicates these tests are recommended in IEEE 450-2002 to ensure that there are no open circuits in the battery string. This is essentially a continuity check of the battery string. In the fourth paragraph, the SDT states that "continuity" was introduced into the standard to allow the owner to choose how to verify continuity of a battery set by various methods, and not to limit the owner to the two methods recommended in the IEEE standards."The SDT in Table 1a, the Maintenance Activity "Verify continuity and cell integrity of the entire battery", and in Table 1b, the Maintenance Activity "Verify electrical continuity of the entire battery". Based on the information in the Supplementary reference, the owner has to choose a method to verify continuity and the measurement of specific gravity and cell temperatures could be the selected method, however it should not be a required maintenance activity as shown in Tables 1a and 1b.
Response: The SDT thanks you for your comments and has modified the standard in consideration of your comments. All references to specific gravity and temperature testing have been removed from the revised standard.		
Ohio Valley Electric Corp.	No	1. In general, all maintenance activities that are verifications of proper function imply that problems found must be resolved within the maximum interval. For some activities, that is an unreasonable expectation. A temporary resolution may reliably correct an adverse situation but may not address the original verification requirement within the maximum interval. 2. Routine substation inspections should not fall under NERC standards. The documentation for quarterly inspections would be oppressive. It is unreasonable to require there to be no DC grounds. All DC grounds do not rise to the level of a reliability concern. In some cases, attempting to resolve a relatively minor DC problem may rise to the level of negatively affecting reliability. 3. The value of capacity testing battery banks and chargers in the context of a protection system reliability

Organization	Yes or No	Question 2 Comment
		standard is questionable.
Response: The SDT thanks you for your comments. **1. The SDT has modified the standard to clarify that corrective actions must be initiated, but intentionally does not identify when they need to be completed, largely for the reasons you cite. See FAQ II-2-I (page 7) for a discussion on this.** **2. The SDT believes that certain verification activities must be performed on a periodic basis via visual inspection. The standard and Frequently Asked Questions document (See FAQ II-5-I, page 15) have been modified in consideration of your comment concerning locating and removal of a dc ground. References to dc grounds have been revised to "unintentional dc grounds."** **3. The SDT believes that the ability of the battery to provide required tripping current is CRITICAL to the reliability of the Protection System; else, the Protection System is unable to react properly when required. Similarly, the SDT believes that the ability of the charger to properly charge the battery is critical to sustain the battery capability.**		
AEP	No	In the process of performing maintenance, some protection systems may need to be taken out of service on in-service equipment (bus differential protection for example) where redundant protection systems do not exist. This action seems counter to NERC recommendations, presenting a scenario for expanding outages during a simultaneous fault. Would the implementation plan include time for the additions of redundant protection systems? Comments expanded in question 10 response.
Response: The SDT thanks you for your comments. To minimize system impact of maintenance, the maintenance necessarily should be scheduled at a time that minimizes the risks. The implementation plan addresses the development of acceptable PSMPs.		
RRI Energy	No	1. It is recommended to change the wording of the Maintenance Activities to the activity itself, not the resolved state of the maintenance correctable issue (i.e. "For microprocessor relay, check for proper operation of the A/D converters" instead of "For microprocessor relays, verify proper functioning of the A/D converters"). The wording of the standard effectively sets the end date for the correction of maintenance identified issues. In other words, maintenance has not taken place until all maintenance correctible issues have been completely resolved. The wording in the standard have set non-compliance "traps" for those performing the maintenance but have not completed correctable issues for legitimate reasons which may not be allowed by the no-exception approach of the standard. For example, rewording of the Battery Supply 3 month activities are recommended as follows: "Check for proper electrolyte level. Check for proper voltage. Check for dc supply grounds." As inspection activities, any issue not corrected during the interval should become a maintenance correctible issue. For generating stations, the judgments to locate and remove a ground are based upon criteria not accounted for in the requirements of this standard. An activity to locate and clear a ground requires the judgment of station maintenance and operational management depending upon the operating conditions of the unit and the level of the ground (solid or high-resistance).Inspections (3 month requirement

Organization	Yes or No	Question 2 Comment
		activities) although good practices, should not be standard requirements. 2. The practice of verifying the continuity of breaker trip circuits does not belong as an auditable NERC standard requirement; it becomes more of a documentation requirement rather than a reliability improvement. Otherwise, it will ultimately require the expending of resources in an unproductive manner primarily on the development, storage, and production of excessive records for compliance purposes. The elimination of this requirement is recommended. 3. For Table 1a Protection System Control Circuitry - rewording is suggested as follows: "Perform functional trip tests of Protection System trip circuits, including auxiliary relays essential to the proper functioning of the Protection System." The requirement, as presently worded "that includes all sections of the Protection System," is overly prescriptive and will create non-compliances for miniscule oversights, given the very large scope of components in protection systems that are spread out far and wide in a system. The requirement opens the door, allowing the compliance process itself to be punitive in nature. When pursued to the extreme under audit conditions, this requirement will be very difficult to demonstrate on a large scale. 4. For Table 1a Station dc supply: The ability of a battery charger to correctly supply equalize voltage to a battery has no direct correlation to reliability of the BES and does not belong in this standard. The objective is that the battery get an equalize charge when it needs it, not the maintenance of the equalize function of a battery charger. How the battery gets equalized is not important to this standard, especially since a battery and the equalize source are usually disconnected from the protection system during the process. 5. For Table 1a Station dc supply: The use of the term "in tolerance," for the measurement of specific gravity, is an inconsistency in stating the standard requirements. There are multiple activities that will necessitate the measurement of a quantity "in tolerance" whether it is battery charger output, individual cell voltages, connection resistances, or internal ohmic values. The suggested rewording is as follows: "Measure the specific gravity and temperature of each cell." 6. For Table 1a Station dc supply: Referring to the requirement to "verify that the station battery can perform as designed" very little of a generating station battery sizing is related to BES protection. Verification of a generating station to design conditions is outside the scope of BES protection and does not belong in this standard. Nearly all protection system operations operate without reliance upon the battery to do so, and the separation of the generating unit from the BES will take place within cycles, if called upon to do so. The remainder of the battery duty cycle is outside the scope of BES protection.

Response: The SDT thanks you for your comments.

The station dc supply 3 month activities section of table 1a has been reworded in consideration of your comment as shown below:

Check:

Organization	Yes or No	Question 2 Comment
		• Electrolyte level (excluding valve-regulated lead acid batteries) • Station dc supply voltage • For unintentional grounds **1. Also FAQ II-5-I (page 15) has been modified in consideration of your comment concerning location and removal of dc grounds on a generating station. The following was added to the FAQs:** In most cases, the first ground that appears on a battery pole is not a problem. It is the unintentional ground that appears on the opposite pole that becomes problematic. Even then many systems are designed to operate favorably under some unintentional DC ground situations. It is up to the owner of the Protection System to determine if corrective actions are needed on unintentional DC grounds. The standard merely requires that a check be made for the existence of Unintentional DC Grounds. Obviously a "check-off" of some sort will have to be devised to demonstrate that a check is routinely done for Unintentional DC Grounds. **Additionally, the Maintenance Activities in Table 1a, Table 1b, and Table 1c have been generally revised as you suggest, to present the activity rather that the resolved state.** **2. The SDT has modified the standard to clarify that this requirement is actually monitoring the trip coil. The SDT believes that verification of breaker trip coil continuity is a vital component of the Protection System performance, and that they must be maintained as specified in the Standard.** **3. The SDT believes that proper functioning of all trip circuit paths is a vital component of the Protection System performance, and that they must be maintained as specified in the Standard.** **4. The SDT has modified the standard in consideration of your comment and the requirement to equalize voltages has been removed from the revised standard** **5. The SDT has modified the standard in consideration of your comment and the comments from others, the reference to measuring specific gravity and temperature has been removed** **6. Thank you for your comments concerning verification that the station battery can perform as designed. Although the SDT agrees with you that very little of a generation station battery sizing is related to BES protection, the majority of a generation station battery duty cycle is for safely operating the station when the other elements of a station dc supply are unavailable and that some Protection System operations can operate using the other elements of the station dc supply besides the station battery. The SDT believes that the station dc supply is such an integral part of the Protection System of a generating station that, at a minimum, it must be maintained using the Maintenance Activities and Maximum Maintenance Intervals of Table 1. It is important to note that the station battery must still be able to perform its vital Protection System functions even if it is simultaneously supplying dc for its myriad of other applications. The required activities include "verify that the station battery can perform as designed."**
Indianapolis Power & Light Co.	No	1. Many preventive maintenance programs have testing tolerances which are tighter than the manufacturer's tolerances. This practice is used to force an action prior to falling outside of the manufacture's tolerances and

Organization	Yes or No	Question 2 Comment
		accounts for slight variations in test equipment and environment. Maintenance correctable issues should not be reportable unless the test failure falls outside of the manufacturer's published tolerances. 2. In tables 1a through 1c the "Type of Component" columns in each table do not have consistent listings from one 1a to 1b to 1c. The type of component should be identified consistently in each table. By doing so this would eliminate confusion in moving from one table to the other. 3. The maintenance activities for some types of components specifies how (i.e. Test and calibrate the relays. with simulated electrical inputs) while other maintenance activities do not specify how. The maintenance activities should either all be specific or all be generic. 4. For Station dc Supply (that has as a component any type of battery) the maintenance activity of "verify that no dc supply grounds are present" there is a problem of tolerance. It is impossible to have "no dc supply grounds present". There has to be some tolerance given here such as a voltage measurement from each battery terminal to ground +- 15 volts of nominal for example. 5. For the type of component of "Protection System Control Circuitry (trip circuits) (UFLS/UVLS Systems only), the maintenance activity requires a complete functional trip test" of the Protection System. This suggests that a breaker trip test is required at each maintenance interval. This requires tripping breakers that supply customers. It is impossible to trip each individual distribution feeder without forcing an outage on some customers as when there are no other usable circuits to tie the load off to. A failure to trip of a single distribution circuit in the overall scheme of a UVLS or UFLS scheme would have little effect on the BES. Trip testing BES breakers and verifying correct operation of breaker auxiliary contacts could become very difficult to accomplish since opening a breaker on a line might adversely affect the BES. ISOs may prohibit such an activity at any time. Allowances should be made for BES circuit breakers that can not be operated for such reasons if documented sufficiently.

Response: The SDT thanks you for your comments.

1. **The tolerances, per Note 1 to Table 1a, Table 1b, and Table 1c, are defined by the entity according to their application considerations as related to the component. The standard has been revised to exclude minor issues that can be corrected during the on-site maintenance activities from "maintenance correctible issues".**
2. **The variations in the "Type of Component" are a result of the varying maintenance activities that are necessary as there are higher levels of component monitoring. If the "Type of Component" was made consistent among all three tables, there would be additional confusion, because many of the "Types of Component" in Tables 1b and 1c would indicate that no maintenance activities are required.**
3. **Generic activity descriptions have been used except where specific activities are necessary.**
4. **The standard and Frequently Asked Questions document (See FAQ II-5-I, page 15) have been modified in consideration of your comment regarding**

Organization	Yes or No	Question 2 Comment
dc grounds. References to dc grounds have been revised to "unintentional dc grounds." **5. We agree. The minimum activities have been revised in the standard to not require tripping of the breakers for this table entry.**		
Platte River Power Authority Maintenance Group	No	Minimum maintenance activities should be based on categorization of relays and defined maintenance actions system by system using historical and definitively known data entity by entity. By establishing specific minimum maintenance activities you risk entities changing currently effective maintenance programs to programs that match minimum maintenance activities to meet requirements in the standard which could be less effective for their system.
Response: The SDT thanks you for your comments. As for including some activities and excluding others, the listed activities are contemplated as minimum activities and do not preclude an entity from performing additional activities. Your use of historical and definitively known data may be applicable to a Performance-Based maintenance program (R3) for some of your activities.		
PacifiCorp	No	No comment.
Duke Energy	No	Our comments are limited to activities in Table 1a. 1. " Protective Relays " okay 2. " Voltage and Current Sensing Devices Inputs to Protective Relays " Proper functioning should be verified at commissioning, and then anytime thereafter if changes are made in a PT or CT circuit. Additional periodic checks may be warranted as suggested in Table 1A; however no additional checking should be required where circuit configuration will inherently detect problems with a PT or CT. For example, PTs & CTs that are monitored through EMS or microprocessor relays will be alarmed when they are out of specification. 3. "Protection System Control Circuitry (Breaker Trip Coil Only) (except for UFLS or UVLS) "Need more clarity on exactly what this activity is expected to include. In some cases we have a red light on a control panel monitoring the circuit path to the trip coil. In locations where there is not a red light, verifying the continuity of the breaker trip circuit including the trip coil will be complicated. There is no straightforward way to do it without potentially impacting reliability, and we would have to consider modifying these installations to include a red light. 4." Protection System Control Circuitry (Trip Circuits) (except for UFLS or UVLS) "Need more clarity on exactly what the activity is. We believe testing one output all the way to the coil is sufficient to prove the trip path. The activity states that "all auxiliary contacts" must be tested. We propose that all protection control circuitry should be tested at initial commissioning, and then again if any changes are made. Ongoing routine testing is complicated and could pose reliability challenges to the BES. As stated on page 8 of the System Maintenance Supplementary Reference document: "Excessive maintenance can actually decrease the

Organization	Yes or No	Question 2 Comment
		reliability of the component or system. It is not unusual to cause failure of a component by removing it from service and restoring it. The improper application of test signals may cause failure of a component. For example, in electromechanical over current relays, test currents have been known to destroy convolution springs. In addition, maintenance usually takes the component out of service, during which time it is not able to perform its function. Cutout switch failures, or failure to restore switch position, commonly lead to protection failures. 5.” Protection System Control Circuitry (Trip Circuits) (UFLS/UVLS Systems Only) Need additional clarity on exactly what the test includes. “Complete functional trip test” should not include tripping the breaker. Proving the output of the relay should be sufficient. Systems that have all load shed on distribution circuits should require that trip output be confirmed but should not be required through to the trip coil due to constraints in tying distribution load. 6. Station dc supply (that has as a component any type of battery) Under the 3 month interval activities, we disagree with the wording of the activity Verify that no dc supply grounds are present. The activity should instead read “Check for dc supply grounds and if any are found, initiate action to repair. 7. Station dc supply (that has as a component any type of battery) Under the 18 month interval activities, what is meant by “Verify continuity and cell integrity of the entire battery”? Also what is required to “Inspect the structural integrity of the battery rack”? The “Supplementary Reference Document” and “Frequently asked Questions” document should be made part of the standard to provide clarity to the requirements. 8. Station dc supply (that has as a component Valve Regulated Lead-Acid batteries) Need more clarity on exactly what is required for a “performance or service capacity test of the entire battery bank”. The “Supplementary Reference Document” and “Frequently asked Questions” document should be made part of the standard to provide clarity to the requirement. 9. Station dc supply (that has as a component Vented Lead-Acid batteries) Need more clarity on exactly what is required for a “performance, service, or modified performance capacity test of the entire battery bank”. The “Supplementary Reference Document” and “Frequently asked Questions” document should be made part of the standard to provide clarity to the requirement. 10.” Protection system communication equipment and channels Need additional clarity on exactly what is required for the substation inspection. What is required for power-line carrier systems? 11. UVLS and UFLS relays that comprise a protection scheme distributed over the power system Need more clarity regarding the meaning of “distributed over the power system”.
Response: The SDT thanks you for your comments.		

Organization	Yes or No	Question 2 Comment
1. Thank you. **2. Your example describes attributes applicable to Table 1c, and which would not require periodic maintenance. If monitoring, as you've described, is not present, periodic verification is necessary as described in Table 1a.** **3. You are correct. This area of each of the Tables has been extensively revised in response to comments. FAQ II-4-C (page 10) explains that this "may be via targeted maintenance activities or by documented operation of these devices for other purposes such as fault clearing" and Section 15.3 of the Supplementary Reference (page 22) provides discussion on this.** **4. If only one path is tested, this provides no assurance that other paths will perform properly. The cited reference on Page 8 of the Supplementary Reference Document is focused on effective maintenance intervals, not on performing maintenances. There are methods of performing functional testing without injecting damaging test currents.** **5. The requirement has been modified to provide more clarity, and has been modified to remove the requirement to actually trip the breaker.** **6. The SDT has modified the standard in consideration of your comment – it now reads, "Check for unintentional grounds."** **7. The SDT has modified the standard in consideration of your comment on cell integrity of the entire battery. Also, the Protection System Maintenance Frequently Asked Questions document (FAQ II-5-H, page 15) that accompanied the standard for this comment period addresses your question about the battery rack in Station dc Supply section. According to the NERC Standard Development Procedure, a standard is to contain only the prescriptive requirements; supporting discussion is to be in a separate document.** **8. Methodologies regarding performance and service capacity tests for VLRA batteries are explained in detail in various available references. According to the NERC Standard Development Procedure, a standard is to contain only the prescriptive requirements; supporting discussion is to be in a separate document.** **9. Your comment is in the nature of a "how to", not a requirement, and therefore the SDT believes it belongs in the supporting discussion. According to the NERC Standard Development Procedure, a standard is to contain only the prescriptive requirements; supporting discussion is to be in a separate document.** **10. FAQ II-6-A (page 16) presents a variety of methods to maintain Protection System communication equipment.** **11. This refers to the common practice of applying UFLS on the distribution system, with each UFLS individually tripping a relatively low value of load. Therefore, the program is implemented via a large number of relays, and the failure of any individual relay to perform properly will have a minimal effect on the effectiveness of the UFLS program. There are some UVLS systems that are applied similarly.**		
Progress Energy	No	Progress Energy does not agree with the activity "Verify that the battery charger can perform as designed by testing that the charger will provide full rated current and will properly current-limit." We are unclear how this test should be performed.
Response: The SDT thanks you for your comments. The SDT has modified the standard in consideration of your comment. The component description was changed to: Station dc supply (which do not use a station battery) And the maintenance activity was changed to: Verify that the dc		

Organization	Yes or No	Question 2 Comment
supply can perform as designed when the ac power from the grid is not present.		
Xcel Energy	No	Regarding battery chargers, does the SDT propose that OEM-type tests be performed to validate the rated full current output and current limiting capabilities? It has been proposed that simply turning off the charger and allowing the batteries to drain for a period of several hours, then returning the charger to service will validate these items. It is not clear that an auditor would come to the same conclusion, since it appears open to interpretation. Please modify to make this clear. If an entity has an over-sized battery charger, they can (and should) only test to the max capacity of the battery bank. Suggest changing "full rated current" to "designed charging rate".
Response: The SDT thanks you for your comments. The SDT has modified the standard in consideration of your comment. The component description was changed to: Station dc supply (which do not use a station battery) **And the maintenance activity was changed to:** Verify that the dc supply can perform as designed when the ac power from the grid is not present.		
Austin Energy	No	See item # 10 Comments
Response: See #10 Response		
Otter Tail Power	No	Station DC supply - (Maintenance Activity) As a company we do not think that measuring specific gravity and temperature of each cell is necessary. There is a better test that we use with the Bite Impedance Test. We have had good success with the impedance test for determining the batteries condition. See article (Impedance Testing Is The Coming Thing For Substation Battery Maintenance)written in Transmission & Distribution 11/1991 by Richard Kelleher, Test & Maintenance Specialist, Northeast Utilities.
Response: The SDT thanks you for your comments regarding DC supply. Changes have been made to the standard in consideration of your comments. The requirement to measure specific gravity and temperature of each cell has been deleted.		
Detroit Edison	No	1. Suggest that under "Maintenance Activities" for "Protective Relays" add the following: Verify proper functioning of the microprocessor relay external logic inputs (carrier block, etc.) 2. We recommend not requiring specific gravity and temperature readings for batteries. We have found from experience that the time and difficulty to obtain specific gravity readings are not justified. We have found that utilizing visual inspections, voltage and internal/intercell resistance readings gives a good picture of the health of the battery. We use specific gravity readings on occasion for troubleshooting purposes. 3. It is recommended that the sections about verifying battery charger performance be eliminated if there are low voltage alarms that go to a monitored location.

Organization	Yes or No	Question 2 Comment
		4. We recommend changing the maximum maintenance interval for DC supplies with no battery from 18 months to 3 years. If there is no battery, you do not have the risk of failure of chemical processes and such that would require an interval as short as 18 months.
Response: Thank you for your comments 1. **The SDT has modified the standard in consideration of your comment. The revised activity reads as follows:** For microprocessor relays, check the relay inputs and outputs that are essential to proper functioning of the Protection System 2. **Thank you for your comments regarding DC supply. The SDT has modified the standard in consideration of your comment. The requirement to measure specific gravity and temperature of each cell has been deleted.** 3. **Changes have been made to the standard in consideration of your comments regarding verifying battery charger performance. The only requirement relative to battery chargers in the latest draft of the standard (see Table 1a, pg 14) is to verify the float voltage.** 4. **The SDT disagrees; the 18-month interval includes several items that can be verified only by physical inspection; that are independent of chemical processes, and that affect the ability of the dc supply to perform properly.**		
SCE&G	No	1. Table 1a Level 1 Monitoring has a requirement to "Verify the continuity of the breaker trip circuit including trip coil" at least every 3 months. This is interpreted to be applicable to both the low-side generator output breaker and the high-side breaker for the GSU. The generator output breaker has 3 separate trip coils (one for each pole) that are connected in a parallel configuration and there is no means available to verify continuity of each of these coils INDIVIDUALLY in this arrangement. Is the intent of this requirement to have each trip signal parallel leg verified every three months even though the trip contacts are normally open (these circuits are functionally checked during LOR Functional Verification)? 2. Also, is the Red Indication Light (RIL), which includes the trip coil in the power circuit, adequate for verification (note that the breaker does not include the parallel legs that contain the tripping sensor contacts)? 3. Also, more clarification is needed on the section "Verify proper functioning of the current and voltage circuit inputs from the voltage and current sensing devices to the protective relays" under "Voltage and Current Sensing Devices Inputs to Protective Relays." How would this be done if no redundancy is available for cross-checking voltage and current sources? 4. In certain situations, "verify proper functioning" is not clear enough. Documentation of verification consistent with the entities procedures should be adequate to indicate compliance.
Response: The SDT thanks you for your comments. **1. The SDT has modified the standard to remove the requirement cited in your comment.**		

Organization	Yes or No	Question 2 Comment
2. The SDT has modified the standard to remove the requirement cited in your comment. **3. The Supplementary Reference Document, Section 15.2 (page 21) and FAQ II-3 (page 8) provides several discussions on this item.** **4. Documentation of verification consistent with your procedures is sufficient to "verify proper functioning"**		
Dynegy	No	Table 1a requires entities to "verify the continuity of the breaker trip circuit including trip coil..." The term "verify" needs clarification. For example, we believe verifying red and green" lights during routine inspection should be sufficient. On the other hand, actual testing is not feasible and is risky to reliability.
Response: The SDT thanks you for your comment, and has modified the standard to remove the requirement cited in your comment.		
Nebraska Public Power District	No	1. Table 1a, for Protective Relays identifies the following Maintenance Activities: Test and calibrate the relays (other than microprocessor relays) with simulated electrical inputs. Verify proper functioning of the relay trip outputs. What is the difference between these two requirements? They appear to be practically equivalent. 2. Tables 1a & 1b, for Station DC supply identify the following Maintenance Activity: Measure that specific gravity and temperature of each cell is within tolerance (where applicable). What is the advantage of testing the SG in every cell compared to using a pilot cell as representative sample of the entire bank? NPPD has not experienced any problems using a pilot cell compared to testing every individual cell. Typically, if the SG is low the cell voltage will be low, which is detected by the voltage test. This seems to be an excessive requirement and does increase personnel exposure to hazardous fluid. What unique information is provided by this test that other tests do not provide?
Response: The SDT thanks you for your comments. **1. The SDT has modified the standard in consideration of your comment. The activity to "verify proper functioning of the relay trip outputs was changed to:** Verify that settings are as specified. **2. The SDT thanks you for your comments regarding DC supply and has made changes to the standard in consideration of your comments. The requirement to measure specific gravity and temperature of each cell has been deleted.**		
ENOSERV	No	1. Table 1A, protective relays for 6 calendar years, Testing and calibrating the relays other than microprocessors relays with simulated electrical inputs... does that mean that micro processor relays do not need to be checked? 2. Verify proper function of the relay trip outputs... Does this involve both electro AND micro processors? Then when mentioning the verifying microprocessor relays, does that include the trip output.

Organization	Yes or No	Question 2 Comment
Response: The SDT thanks you for your comments. **1. Yes. The SDT has modified the standard for clarity. The maintenance activities for microprocessor relays were changed to read as follows:** For microprocessor relays, check the relay inputs and outputs that are essential to proper functioning of the Protection System. For microprocessor relays, verify acceptable measurement of power system input values. **2. Yes. The SDT has modified the standard for clarity. The language for microprocessor relays was changed as noted in response to your first comment; the following modification addresses all protective relays:** Verify that settings are as specified.		
Southern Company	No	1. Tables 1a and 1b require entities to verify the proper operation of voltage and current inputs to sensing devices on a 12 year interval. The Protection System Supplementary Reference (Draft 1), in section 15.2, describes several methods that may be used for such verification efforts. In order to perform this type of verification the circuit in question would need to be in operation. This verification introduces a possible unit trip due to the need to connect test equipment to live potential and current circuits at each relay, which has the potential to trip the circuit under test. This could result in the loss of critical transmission lines or generating units. The System Maintenance Supplementary Reference also allows saturation tests or circuit commissioning tests to satisfy this requirement; however, these types of tests require the circuit in question to be removed from service. For generating plants, removing the circuit from service requires that the station be shut down. We do not feel that the value obtained from this requirement is equal to the risk or maintenance burden associated with it. Such testing and verification should not be required periodically, but only if new instrument transformers, cabling or protective devices are installed or if the instrument transformers are replaced. 2. Table 1b: Protection System Control Circuitry (Trip Coils and Auxiliary Relays) " Experience has shown that electrically operating partially monitored breaker trip coils, auxiliary relays, and lockout relays every 6 years is not warranted. This testing introduces risk from a human error perspective as well as from additional switching and clearances required. We recommend eliminating this maintenance requirement. 3. Protection System Control Circuitry (Trip Circuits) (UFLS or UVLS Systems Only) - Table 1b includes the statement "Verification does not require actual tripping of circuit breakers or interrupting devices." This statement should be included in Table 1a. 4. In Table 1a "Station DC Supply (that has as a component any type of battery), we recommend changing the maximum maintenance interval from 3 months to 6 months as described below. 5. "Verify Proper Electrolyte Level "3 Months - The 3 months interval for verifying proper electrolyte level is excessive for current battery designs that are properly maintained. The interval in which the electrolyte must be replenished is affected by many factors. These include temperature, float voltage, grid material, age of the

Organization	Yes or No	Question 2 Comment
		battery, flame arrester design, frequency of equalization, and electrolyte volume in the battery jar. Manufacturers are aware that their customers want to extend the interval in which their batteries require water and this has lead to jar designs that have a wide min-max band with a high volume of electrolyte to allow for extended watering intervals. Understanding all the factors and proper maintenance will extend watering intervals. A battery should go a year or more between watering intervals and some as many as 3 years. Being conservative the Southern Company Substation Maintenance Standards require that we check the electrolyte level twice yearly. Experience has shown this has worked well. We propose that the "3 Months" interval be changed to "6 months". 6."Verify proper voltage of the station battery "3 Months - Being conservative, the Southern Company Substation Maintenance Standards require that we check the station battery voltage twice yearly. Experience has shown this has worked well. We propose that the "3 Months" interval be changed to "6 months". 7." Verify that no dc supply grounds are present "3 Months Being conservative, the Southern Company Substation Maintenance Standards require that we check for dc supply grounds twice yearly. Experience has shown this has worked well. We propose that the "3 Months" interval be changed to "6 months". 8. Measurement of Specific Gravity 18 Months- The measurement of specific gravity and temperature every 18 months is not necessary as a regular part of maintenance. Specific gravity can provide information as to the health of a cell; however, taking specific gravity readings is a messy process no matter how careful you are and will result in acid being dripped on top of the battery jars as the hydrometer is moved from cell to cell. Should a drop of acid end up on an external connection, it will result in corrosion and problems later. Voltage reading of cells can be substituted for specific gravity readings under normal conditions. Specific gravity is equal to the cell voltage minus 0.85. A cell with low voltage will have a low specific gravity. If cell voltage becomes a problem that cannot be addressed through equalization then specific gravity readings are justified as a follow-up test. Since measurement of specific gravity could lead to problems and reading cell voltage is a viable alternative, we propose that it be removed from the battery maintenance activities. 9. Verify Cell to Cell and Terminal Connection Resistance 18 Months - Clarification is needed on the expected method for verifying cell to cell and terminal connection resistance. This could easily be interpreted as requiring the use of an ohmic value (impedance/conductive/resistance) test device. If this is the case then basically it eliminates the need for the activity to "Verify that the substation battery can perform as designed by performing a capacity test every 6-Calendar Years or performing an ohmic value test every 18 Months", because the practical thing to do is go ahead and perform the ohmic value test while you have your device connected to the battery. 10. In table 1a and 1 b - Station dc supply (that has as a component -Vented Lead-Acid batteries). Verify that the Substation Battery can Perform as Designed 6 Calendar Years/18 Months - Southern Company Transmission has approximately 570 batteries that are covered by this proposed standard. These batteries currently have ohmic value testing performed every "4 Years" as required by the Southern Company

Organization	Yes or No	Question 2 Comment
		Substation Maintenance Standards. The “4 Years” interval has been utilized for over 10 years and has not experienced a failure of any of the 570 batteries to perform as designed Having to perform ohmic value testing on an “18 Months” interval will significantly increase our costs and manpower requirements with no anticipated improvement in reliability. We propose that the “18 Months” interval for ohmic value testing be changed to “4 Calendar Years”. This proposal also applies to verifying cell to cell and terminal connection resistance if an ohmic value test device is required as discussed above. 11. In table 1a and 1b Station dc supply (that uses a battery and charger). Verify that the Battery Charger can Perform as Designed 6 Calendar Years - Clarification is needed on an acceptable method for verifying that the battery charger can perform as designed by testing that the charger will provide full rated current and will properly current limit, especially the part about “will properly current limit”. 12. On Table 1b Station DC Supply (that has a component any type of battery) we recommend changing the maximum maintenance interval from 3 months to 6 months as described below “ Verify Proper Electrolyte Level “ 3 Months - The 3 months interval for verifying proper electrolyte level is excessive for current battery designs that are properly maintained. The interval in which the electrolyte must be replenished is affected by many factors. These include temperature, float voltage, grid material, age of the battery, flame arrester design, frequency of equalization, and electrolyte volume in the battery jar. Manufacturers are aware that their customers want to extend the interval in which their batteries require water and this has lead to jar designs that have a wide min-max band with a high volume of electrolyte to allow for extended watering intervals. Understanding all the factors and proper maintenance will extend watering intervals. A battery should go a year or more between watering intervals and some as many as 3 years. Being conservative the Southern Company Substation Maintenance Standards require that we check the electrolyte level twice yearly. Experience has shown this has worked well. We propose that the “3 Months” interval be changed to “6 months”. 13. We recommend removing the “Detection and alarming of dc grounds” monitoring attribute. Note that this applies to every “Station dc supply” section where it is listed. .Experience has shown that there have been no significant problems discovered via alarms that would not have been discovered by 6 month inspection cycles. We propose to add “verify no dc grounds are present” as a maintenance activity on a 6 months inspection cycle. Experience has shown that there have been no significant problems discovered via alarms that would not have been discovered by 6 month inspection cycles. 14. Table 1a, p. 7, Station dc supply, 3 month interval: need to add “unintentional” to the sentence “Verify that no dc supply grounds are present.” Because most dc systems have ground detection systems which place an intentional ground on the battery. “No grounds” is not practical and is unacceptable since most dc systems have some high resistance ground paths. Some criteria should be established to determine the acceptable ground resistance on a dc system. 15. Table 1a, p. 8: For the vented, lead-acid battery, there is no basis for the 18 month activity option

Organization	Yes or No	Question 2 Comment
		(internal ohmic value measurement) in place of the 6 year performance test. 16. The activities for trip checks for Level 1A and Level 1B should be the same. Currently, they read: Level 1a: Perform a complete functional trip test that includes all sections of the Protection System trip circuit, including all auxiliary contacts essential to proper functioning of the Protection System. Level 1b: Verify that each breaker trip coil, each auxiliary relay, and each lockout relay is electrically operated within this time interval. The Level 1a text is adequate for 1b also. 17. Table 1c, p 16: Monitoring of single or parallel trip circuits is not practical where multiple normally open contacts are in series to trip. Monitoring of the trip coils is practical and useful. How would one monitor several normally open contacts which are in series to trip a breaker? 18. Table 1c, p. 15, 16, 19: The use of "continuous" under "Maximum Maintenance Interval" in Table 1c should be changed to "N/A" and the Maintenance Activity should be "NONE". 19. Verification of the various monitoring (automated notification) systems is not specified anywhere in the requirements. This, too, should be required.

Response: The SDT thanks you for your comments.

1. The SDT believes that proper functioning of the sensing devices is a vital component of the Protection System performance, and that they must be maintained as specified in the Standard. To minimize system impact of such maintenance and possible errors, the maintenance necessarily should be scheduled at a time that minimizes the risks.

2. The SDT believes that proper functioning of the Protection System Control Circuitry is a vital component of the Protection System performance and those must be maintained as specified in the standard. To minimize system impact of such maintenance and possible errors, the maintenance necessarily should be scheduled at a time that minimizes the risks

3. The SDT has modified the standard in consideration of your comment. The following was added to Table 1a:

> **Type of Component -** Control and trip circuits with electromechanical trip or auxiliary (UFLS/UVLS Systems Only)
>
> **Maximum Maintenance Interval -** 6 Calendar Years
>
> **Maintenance Activity -** Perform a complete functional trip test that includes all sections of the Protection System control and trip circuits, including all electromechanical trip and auxiliary contacts essential to proper functioning of the Protection System, except .that verification does not require actual tripping of circuit breakers or interrupting devices.

4. Please see responses 5, 6 and 7 (below) for discussion regarding your concern about extending the Maximum Maintenance Intervals for an extra 3 months on activities related the station dc supply.

5. The SDT agrees that a healthy modern lead acid battery can go for extended periods of time beyond 3 months without requiring watering. However, checking cell electrolyte level not only indicates the need for battery watering, it is an indication of an individual cell's health and needs to remain at

Organization	Yes or No	Question 2 Comment
		the Maximum Maintenance Interval of 3 months. To avoid the confusion that the Maintenance Activity listed in Table 1 was to water the battery at the specified 3 month interval, the Drafting Team has changed the wording of the Maintenance Activity from "verify proper" to "check" electrolyte level. 6. Thank you for your comment to extend the Maximum Maintenance Interval for checking the station dc supply voltage. The SDT believes that extending the Maximum Maintenance Interval beyond that listed in Table 1 would compromise the performance of the station dc supply. 7. Due to the consequences of unintentional grounds to the station dc control system, the SDT feels that extension of the Maintenance Intervals beyond the 3 month interval is not prudent. See FAQ IV-2-F (Page 23). 8. Changes have been made to the standard in consideration of your comments regarding specific gravity testing, and the revised standard does not include a requirement to perform this maintenance activity. 9. Thank you for your comments concerning performance of ohmic measurement at the same time that connection resistance is measured. As you suggested, these two measurements could be taken at the same time to meet the requirements of their respective Maintenance Activities. 10. Thank you for your comments concerning evaluating internal ohmic values and measurement of battery connection resistance for Vented Lead-Acid (VLA) batteries. As noted in your comment an owner has two different Maintenance Activities with associated different Maximum Maintenance Intervals to choose from in verifying that the VLA station battery can perform as designed. FAQ II-5-F (page 14) and II-5-G (page 14) provides an explanation of why there are two different intervals for these Maintenance Activities is given. Because trending is an important element of ohmic measurement evaluation, the SDT believes that extending the Maximum Maintenance Interval listed in Table 1 for evaluating internal ohmic values to four years as suggested would not provide the necessary information for proper evaluation of the ability of the station battery to perform as designed. Concerning verifying cell to cell and terminal connection resistance as part of inspecting the battery, various technical references on Lead-Acid battery maintenance talk about how and why this Maintenance Activity should be performed at the Maximum Maintenance Interval listed in Table 1. The SDT believes that to extend this inspection activity for the connections of a Lead-Acid battery beyond the Maximum Maintenance Interval would compromise the performance of the station dc supply. 11. The SDT has modified the standard in consideration of your comment regarding battery charger performance. The only remaining maintenance activity relevant to the battery charger is to verify the float voltage. 12. The SDT agrees that a healthy modern lead acid battery can go for extended periods of time beyond 3 months without requiring watering. However, checking cell electrolyte level not only indicates the need for battery watering, it is an indication of an individual cell's health and needs to remain at the Maximum Maintenance Interval of 3 months. To avoid the confusion that the Maintenance Activity listed in table 1 was to water the battery at the specified 3 month interval, the Drafting Team has changed the wording of the Maintenance Activity from "verify proper" to "check" electrolyte level. 13. Thank you for your comments concerning the monitoring attribute for unintentional dc grounds on the station dc supply. Due to the consequences of unintentional grounds to the station dc control system (see FAQ II-5-I, page 15), the SDT feels that monitoring for them is an important part of an effective condition based maintenance program and should be an option available for those who want to perform condition based maintenance. Also because the threat to the dc system and the BES that unintentional dc grounds create, the SDT feels that extension of the Maintenance Intervals for

Organization	Yes or No	Question 2 Comment
checking for unintentional dc grounds beyond the 3 month interval is not prudent. See FAQ IV-2-F (page 23). **14. The SDT has modified the standard in consideration of your comment regarding dc grounds – the word, "unintentional" was added as proposed.** **15. The SDT thanks you for your comment concerning ohmic value measurements. The FAQ II-5-F (page14) includes an explanation for the basis of this activity. The SDT believes that this Maintenance Activity is a viable alternative that a Vented Lead-Acid battery owner can perform at the Maximum Maintenance Interval of Table 1 in place of conducting a performance, modified performance or service capacity test.** **16. For Table 1b, much of the DC control circuit is, by definition, being monitored; therefore, the only requirement is that the electromechanical devices be exercised.** **17. With the detail provided in your comment, it appears to the SDT that you would not be able to use Table 1c in this example.** **18. "Continuous" is intended to clarify that the maintenance is being performed continuously via the monitoring system and the Activities portion of the table is intended to state those activities that are being performed by the monitoring system.** **19. This verification is established within the "General Description" at the top of Table 1c as generic criteria to use this table.**		
Transmission Owner	No	a. Tables 1a, 1b & 1c should offer as an alternative, measuring battery float voltages and float currents in lieu of measuring specific gravities as described in Annex A4 of IEEE Std 450-2002. b. Inspection of CVT gaps, MOVs and gas tubes should be added to the communications equipment time based maintenance tables. Failure of the CVT protective devices may cause failure of the Protection System. c. Maintenance Activities for UVLS or UFLS station dc supplies shows "Verify proper voltage of dc supply". Does this imply that, except for voltage readings of the dc supply, distribution battery banks are not maintained? d. Why does the Maintenance Activities for UVLS or UFLS relays state that verification does not require actual tripping of circuit breakers? e. Please clarify the Maintenance Activities for Voltage and Current Sensing Devices. Must voltage, current and their respective phase angles be measured at each discrete electromechanical relay?
Response: The SDT thanks you for your comments. **a. The SDT has modified the standard in consideration of your comment regarding dc supply. All references to measuring specific gravities have been removed from the revised standard – and for Table 1a for station dc supply, the language was revised to require, "Verify float voltage of battery charger."** **b. Power line carrier channels are made up of many components that must be maintained on a periodic basis. This standard indicates that adequate maintenance and testing must be done to keep the performance of the channel at a level that meets the requirements of the relay system. The**		

Organization	Yes or No	Question 2 Comment
determination of specific maintenance activities is the responsibility of the Entity. **c. This standard limits the maintenance requirements of distribution system batteries to those used for UVLS and UFLS and constrains those requirements to verification of proper voltage. If "distribution system" batteries are used for any other BES Protection System applications, they must be maintained according to the other requirements of this standard.** **d. The SDT believes that the UFLS scheme is predominantly based within the distribution sector. As such, there are many circuit interrupting devices that will be operating for any given under-frequency event that requires tripping for that event. A failure in the tripping-action of a single distribution breaker will be far less significant than, for example, any single Transmission Protection System failure such as a failure of a Bus Differential Lock-Out Relay. While many failures of these distribution breakers could add up to be significant, it is also believed that distribution breakers are operated often on just fault clearing duty and therefore the distribution circuit breakers are operated at least as frequently as any requirements that might have appeared in the standard.** **e. Not exactly. The requirement is that the entity must verify that proper voltage, current, and phase angle is delivered to the relays. The standard does not prescribe methodology. See FAQ II-3-A (page 8) and the Supplementary Reference Document, Section 15.2 (page 21) for a discussion on this topic.**		
Pepco Holdings Inc.	No	1. Tables 1a, 1b and 1c all require measuring specific gravity and temperature of battery cells. This invasive test provides no information regarding battery health that cannot be obtained from cell impedance testing. Recommend requiring cell impedance OR specific gravity & cell temperature testing. 2. Tables 1a, 1b and 1c all require testing the battery charger every 6 years to verify that it can provide full rated current and will properly current limit. In order to perform this (unnecessary) test the battery would be subjected to a deep discharge. Whatever benefits may be derived from this test are dwarfed by the negative effect on the battery. Recommend removing this requirement.
Response: The SDT thanks you for your comments. **1. The SDT has made changes in consideration of your comments regarding measuring of specific gravity and temperature of battery cells and removed this maintenance activity from the revised standard.** **2. The SDT has modified the standard in consideration of your comments regarding battery charger performance. All maintenance activities relating to the battery charger were removed except for verification of the float voltage.**		
Illinois Municipal Electric Agency	No	1. The Illinois Municipal Electric Agency (IMEA) is concerned the minimum maintenance activities may be too prescriptive for transmission subsystems that essentially operate radially. 2. Please see comment under Question 7. 3. Also, IMEA supports comments submitted by Florida Municipal Power Agency regarding applicability to

Organization	Yes or No	Question 2 Comment
		UFLS systems.
Response: The SDT thanks you for your comments. **1. This standard applies Protection Systems that that are applied on, or are designed to provide protection for the BES. The SDT believes that the level of prescription within the standard is necessary to satisfy the guidance in FERC Order 693, and also to address observations from the Compliance Monitoring entities (the Regional Entities and NERC) that PRC-005-1 is excessively general. FERC Order 672 also specifies that NERC Standards should be clear and unambiguous. The SDT has therefore defined the minimum activities necessary to implement an effective PSMP.** **2. Please see our response to your comments under Question 7.** **3. The SDT has responded to the FMPA comments regarding UFLS systems.**		
Consumers Energy Company	No	1. The second sentence in Note 1 on page 20 should be changed to "A calibration failure is when the relay is inoperable and cannot be brought within acceptable parameters." 2. Note 2 should be changed to "Microprocessor relays typically are specified by manufacturers as not requiring calibration. The integrity of the digital inputs and outputs will be verified by applying the inputs and verifying proper response of the relay. The A/D converter must be verified by inputting test values and determining if the relay measurements are correct."
Response: The SDT thanks you for your comments. **1. The standard establishes a calibration failure to be any condition where the relay is found to be out of tolerance, whether or not it can be restored to acceptable parameters. The condition described is a calibration failure that is also a "maintenance correctable issue" as established in revisions to R4 and the resulting footnote, and requires more extensive action to resolve.** **2. Note 2 has been removed and the relevant requirements added to the Tables themselves. There are methods, other than inputting test values, to verify the A/D converter.**		
American Transmission Company	No	1. The Standard should focus on identifying the types of components to be tested but should not identify the specific maintenance activities that must be performed. Entities should be allowed the flexibility to develop and implement the appropriate maintenance activities necessary for each identified component. 2. ATC is also concerned with the expressed identification of maintenance intervals. We do not believe that the standard should identify specific maintenance intervals but that it should require entities to identify their maintenance intervals appropriate for their system. If the team continues to pursue specific maintenance intervals it will be establishing the industries practices. 3. Specific Concern: The standard identifies that entities should perform complete functional testing as part of its maintenance activities, but we are concerned that this could lead to reduced levels of reliability, because it

Organization	Yes or No	Question 2 Comment
		requires entities to remove elements from service and then requires entities to perform tests that are inherently prone to human errors. We believe that the perceived benefits do not match the anticipated costs or improve system reliability.
Response: The SDT thanks you for your comments. As you are probably aware, protection systems have contributed to most major events, indicating a need to provide greater "defense in depth" to the body of standards. While many facility owners do have effective protective system maintenance programs, some do not – which puts the grid at risk. **1. Specific activities are defined where necessary to implement an effective PSMP, and has provided for flexibility where there are multiple methods that will be effective.** **2. FERC Order 693 expressly directs NERC to develop maximum maintenance intervals.** **3. The SDT believes that complete functional testing is a vital component of the Protection System performance, and must be performed as specified in the standard. To minimize system impact of such maintenance and possible errors, the maintenance necessarily should be scheduled at a time that minimizes the risks.**		
Wolverine Power Supply Cooperative, Inc.	No	The tables are too prescriptive - The standards should state what, not how.
Response: The SDT thanks you for your comments. The SDT believes that the level of prescription within the standard is necessary to satisfy the guidance in FERC Order 693, and also to address observations from the Compliance Monitoring entities (the Regional Entities and NERC) that PRC-005-1 is excessively general. FERC Order 672 also specifies that NERC Standards should be clear and unambiguous. The SDT has therefore defined the minimum activities necessary to implement an effective PSMP.		
Northeast Power Coordinating Council	No	1. We agree there is a need for minimum maintenance activities; however, the standard does not clearly define the differences between Table 1a, 1b, and 1c. It is recommended that the drafting team develop definitions for the equipment listed in these tables. For example, Table 1a equipment consists of mechanical and solid state equipment without monitoring capability, Table 1b consists of mechanical and solid state equipment with monitoring capability, and Table 1c consists of equipment capable of self monitoring. 2. In addition, all battery, charger and power supply maintenance activities should be removed from Table 1a, 1b, and 1c, and summarized in a separate Table (i.e. Table 2). Tables 1a and 1b for 'Station dc supply (that has as a component any type of battery) and Table 1c for 'Station dc Supply (any battery technology) for an 18 Month 'Maximum Maintenance Interval' identifies the need to 'Measure that the specific gravity and temperature of each cell is within tolerance (where applicable).' 3. Following industry best practices, we would recommend using the MBRITE diagnostic test. MBRITE testing provides more information than a specific gravity test while reducing the risk of injury to testing

Organization	Yes or No	Question 2 Comment
		personnel. 4. In Table 1a, the Type of Component "Protection system communications equipment and channels." has a 3 month "Maximum Maintenance Interval". Clarification needs to be provided as to how an unmonitored (do not have self-monitoring alarms) will be tested. 5. Table 1a refers to "Unmonitored Protection Systems". The "6 Calendar Years" "Maximum Maintenance Interval" "Maintenance Activities" is excessive.
Response: The SDT thanks you for your comments. **1. The component differences between Table 1a, Table 1b, and Table 1c are described in the header to the Tables and in the specific monitoring attributes for the specific component types. Please see the decision trees near the end of the FAQ document (pages 33-37).** **2. The SDT believes that the Station DC Supply component should be addressed with the other components, and has simplified the Tables in consideration of your comments.** **3. The DC Supply component has been modified, and no longer specifically requires specific gravity testing.** **4. See FAQ II-6-B (page 16) for a discussion of a number of methods to test the communications systems.** **5. Your comment is unclear, and the SDT is unsure how to respond. The SDT believes that the level of prescription within the standard is necessary to satisfy the guidance in FERC Order 693, and also to address observations from the Compliance Monitoring entities (the Regional Entities and NERC) that PRC-005-1 is excessively general. FERC Order 672 also specifies that NERC Standards should be clear and unambiguous. The SDT has therefore defined the minimum activities and maximum intervals necessary to implement an effective PSMP. Some entities may feel that they need to maintain Protection System components more frequently.**		
Lower Colorado River Authority	No	We agree with all stated intervals except for the maximum stated interval of 6 years for Protection System Control Circuitry (Trip Coils and Auxiliary Relays) in tables 1b and 1c. What was the intent of separating this interval out from the Protection System Control Circuitry (Trip Circuits), which is 12 years for monitored components? Monitoring of the trip coils should be enough to justify a maximum interval of 12 years. As stated these requirements will put an undue financial and resource burden on utilities that have updated their protective relay systems with state-of "the art components and monitoring. In addition to the expense and effort of scheduling the additional maintenance, the additional validation of lockouts and auxiliary relays, separate from the full function testing could lead to additional human errors and accidental tripping of circuits while testing. We believe there should be one stated activity "Protection System Control Circuitry and have a maximum interval of 12 years for monitored systems.
Response: The SDT thanks you for your comments. **Monitoring of the coil of these devices does not assure that the device will mechanically operate properly. Electromechanical devices such as lockout**		

Organization	Yes or No	Question 2 Comment
relays and auxiliary relays must be exercised periodically to assure proper operation. The monitoring systems cannot perform this. See Supplementary Reference Document Section 15.3 (page 22).		
Ameren	No	We agree with the vast majority of them, listed below are our few concerns, questions, and pleas for clarification. 1) We disagree with doing specific gravity and temperature of every cell in the 18 month test because the other tests being done are already comprehensive. 2) FAQ 3B p 29 digital relay A/D verification should include simply comparing digital relay displayed metered values to another metered source. 3) FAQ 3A p6 Change “prove that” to “verify”. For single CT or VT, this can be challenging and some measure of reasonableness in determining an expected value comparable to the measured value must be acceptable. 4) FAQ 1B p17 Combining evidence forms of “Process documentation or plans” and “Data” or “screen shots” shows compliance. Please add an example or verbiage to clarify that a field technician’s (or operator) recorded check-off combined with a company’s process is sufficient evidence. Otherwise documentation alone could consume considerable field personnel time. 5) FAQ p2 Add FAQ to clarify “verify settings”. If EM relays are included, explain that minor tap or time dial differences of the order of relay tolerances are acceptable. For digital relays state that software compare functions are a sufficient means to “verify settings.” 6) Omit Table 1b row 3 because row 4 actually applies to Monitoring Level 2 Trip Circuits. Row 3 already appears in Table 1a, and repeating it in Table 1b is confusing. 7) FAQ 4D p 7 then defines auxiliary relays as device 86 and 94. Does device number nomenclature or function determine and restrict inclusion? 8) Please state that “a location where action can be taken for alarmed failures” would include a dispatch center or control room. From there the custodial authority would be called out to take action. 9) Please explain the expansion from station battery to station DC supply, specifically the addition of the charger, an AC to DC device. 10. The charger load test up to its current limiter would add a significant amount of work with little known benefit. 11. Have charger problems been a significant cause of cascading outages? 12) We oppose your expansion of Station DC Supply to UFLS (the last row on page 8.) PRC-008-0 is

Organization	Yes or No	Question 2 Comment
		restricted to UFLS equipment. UFLS is often applied in distribution substations to trip feeders directly serving load. Your scope expansion has the potential to greatly increase the number of substation DC Supplies covered by NERC standards. ,. While we agree that UFLS is BES applicable, and those substations are included in our overall maintenance program, this expansion to NERC scrutiny is not warranted. Have there been UF events in which a material amount of load was not shed because of DC problems? UFLS is spread out amongst many distribution stations, and even if a couple did fail to trip in an underfrequency event, it would have little effect. 13) FAQ 2 p 17 expands the scope at Generating Facilities so that system connected station auxiliary transformers would be included. We oppose this expansion as these are radially served loads, and they often do not result in generation loss. Even if they did, the BES can readily tolerate the loss of a single generator.

Response: The SDT thanks you for your comments.

1. **All references to specific gravity and temperature testing have been removed from the revised standard.**
2. **The FAQ has been revised and reorganized in response to many industry comments; see FAQ II-3 (all subsections – pages 8-10) for a discussion of this topic.**
3. **The FAQ has been revised and reorganized in response to many industry comments; see FAQ II-3 (all subsections – pages 8-10) for a discussion of this topic.**
4. **The FAQ has been revised and reorganized in response to many industry comments; see FAQ IV-1-B (page 21)**
5. **See FAQ II-2-D & II-2-E(pages 6-7).**
6. **Table 1a and Table 1b each stand alone; use the table that is relevant to the level of monitoring that is implemented.**
7. **The SDT modified the FAQ to remove references to the IEEE device numbers (page 11) except when essential to respond to the question. Regardless of how the device is described by internal entity nomenclature, the function of the device determines whether it is included within the standard.**
8. **Your suggestion is properly considered as an example. See FAQ V-1-A (page 28).**
9. **The SDT believes that the charger is an integral portion of the Station DC supply; thus it has been added. The SDT has modified the standard to simplify the requirements related to maintenance of the battery charger.**
10. **The SDT modified the standard in consideration of your comment. All maintenance activities pertaining to battery chargers have been removed except verification of the float voltage.**
11. **The standard addresses overall Protection System reliability, not only those issues that may cause cascading outages.**
12. **The SDT believes that verification of the DC supply voltage to the UFLS is not burdensome. The SDT has modified the standard to clarify that the**

Organization	Yes or No	Question 2 Comment
only DC Supply requirement relevant to UFLS is to verify the DC supply voltage. **13. Station service transformers are essential to starting the plant during grid recovery. The FAQ clarifies why these elements are included. The standard addresses overall Protection System reliability, not only those issues that may cause extreme outages.**		
Manitoba Hydro	No	1. What documentation or evidence is required to prove that the Protection System Control Circuitry has been maintained every three months, if just a visual inspection of the breaker control trip circuit RED panel light has been completed, to verify continuity of breaker trip coil? 2. How do we handle breakers with dual trip coils and only one RED light for trip coil continuity? 3. What do the terms DISTRIBUTED and CENTRALIZED with respect to UFLS mean? 4. In Table 1C under the heading "Maximum Maintenance Interval" some of the entries are stated as being "Continuous". In the case of other maintenance activities the descriptor for Maintenance Interval indentifies the maximum period of time that may elapse before action must be taken. "Continuous" implies continuous action; however, in reality continuous monitoring enables no maintenance action to be taken until such time as trends indicate the need to do so. Therefore we recommend that where the maintenance interval is stated as "Continuous" it should be changed to read "Never" or "Not Applicable". 5. The Table 1A requirement of 3 months for Protection System Control Circuitry (Breaker Trip Coil Only) (except for UFLS or UVLS) should be omitted as it is not realistic. Recommend following the Table 1B requirement of 6 years (Trip testing) for this. Does 27 undervoltage monitoring of this circuit qualify as self monitoring?
Response: The SDT thanks you for your comments. **1. The requirement to which you refer has been removed. See FAQ IV-1-B (page 21) for a general discussion of documentation.** **2. The SDT has modified the standard to remove the requirement cited in your comment.** **3. See FAQ II-7-C (page 18) and FAQ II-8-E (page 19A).** **4. Continuous" is intended to clarify that the maintenance is being performed continuously via the monitoring system and the Activities portion of the table is intended to state those activities that are being performed by the monitoring system.** **5. The SDT has removed this requirement.**		
CPS Energy	No	While I agree for the most part, there are some activities that are unclear. 1. Specifically, the testing of voltage and current sensing devices, some of the trip coil testing, and some of the communications testing. If the trip coil is now going to be included in the definition of the protective

Organization	Yes or No	Question 2 Comment
		system, is the testing defined adequate? 2. The testing of the voltage and current sensing devices is not entirely clear.
Response: The SDT thanks you for your comments. **1. The listed activities are contemplated as minimum activities and do not preclude an entity from performing additional activities.** **2. See the Supplementary Reference Document, Section 15.2 (page 21) and FAQ II-3-A (page 19) for a discussion of this topic.**		
AECI	No	1. Tables 1a and 1b Station DC Supply: Requirement is to measure specific gravity and temperature of every cell. We believe that this test is unnecessary if voltage and internal resistance are measured. This test should only be required if other tests indicate a problem, or if the voltage and internal resistance tests are not performed. 2. Tables 1a and 1b Station DC Supply (Valve Regulated Lead-Acid Batteries): Will a limited discharge test be acceptable as a "performance or service capacity test" or is full discharge required? We believe a full discharge test will decrease battery life and suggest that only a limited discharge test be performed. 3. Tables 1a and 1b Station DC Supply (Vented Lead-Acid Batteries): What is the definition of "modified performance capacity test?"
Response: The SDT thanks you for your comments. **1. The SDT has modified the standard in consideration of your comment concerning station dc supply and has removed the requirement to measure specific gravity and temperature of every cell.** **2. The SDT does not feel that conducting a performance or service capacity test at the intervals prescribed in the standard will cause any appreciable decrease in battery life over the service life of the battery. The Protection System owner is responsible for maintaining a station dc supply that can perform as designed and conducting a performance or service capacity test will verify that a VRLA battery will satisfy the design requirements (battery duty cycle) of the dc system that a limited discharge test might not verify. If you are concerned that such a test may have implications on battery life, the standard provides an option to instead measure and trend internal cell/unit ohmic values on a 3-month interval.** **3. How to conduct a modified performance test for Vented Lead-Acid Batteries is explained in detail in various available reference books. For Vented Lead-Acid Batteries, it is a capacity test where the discharge rate(s) are modified to cover every portion of the battery's duty cycle.**		
Puget Sound Energy	No	For all tables, PSE agrees with the majority of the minimum maintenance activities established. However, the Station DC supply maintenance activities raise concern. The requirement to test that the charger will provide full rated current versus output seems to be excessive. In many cases the charger is rated far in excess of the output needed to perform its function. Also PSE is not aware of a known industry test for these and it is

Organization	Yes or No	Question 2 Comment
		not an IEEE recommended standard. Finally, PSE is unclear whether this test would diminish the charger.
Response: The SDT thanks you for your comments. The SDT modified the standard in consideration of your comment regarding battery chargers. The maintenance activities for battery chargers have been modified to remove all activities except for verification of the float voltage.		
SERC (PCS)	Yes	We agree with the majority of the activities. Below is an example where clarification is needed. 1. "Verify proper functioning of the current and voltage circuit inputs from the voltage and current sensing devices to the protective relays" under "Voltage and Current Sensing Devices Inputs to Protective Relays." How would this be done if no redundancy is available for cross-checking voltage and current sources? 2. In certain situations, "verify proper functioning" is not clear enough. Documentation of verification consistent with the entities procedures should be adequate to indicate compliance.
Response: The SDT thanks you for your comments. **1. The standard is prescribing what needs to be done, not how. Please refer to the Supplementary Reference Document Section 15.2 (page 21) and FAQ II-3-A (page 19) for examples and additional discussion.** **2. Documentation of verification consistent with your procedures is sufficient to "verify proper functioning"**		
TVA	Yes	Add clarifying statement from Table 1b for Protection System Control Circuitry (Trip Circuits) (UFLS/UVLS Systems Only) to the same section in Table 1a. Statement is "(Verification does not require actual tripping of circuit breakers or interrupting devices.)"
Response: Thank you for your comment. The SDT has modified the standard in consideration of your comment. The following was added to Table 1a: **Type of Component -** Control and trip circuits with electromechanical trip or auxiliary (UFLS/UVLS Systems Only) **Maximum Maintenance Interval -** 6 Calendar Years **Maintenance Activity** - Perform a complete functional trip test that includes all sections of the Protection System control and trip circuits, including all electromechanical trip and auxiliary contacts essential to proper functioning of the Protection System, except .that verification does not require actual tripping of circuit breakers or interrupting devices.		
JEA	Yes	If a communication system relies on a battery system independent of the "station battery", is this communication system battery under the same requirements as the "station battery"?
Response: Thank you for your comment. The proper functioning of such batteries will be addressed by the verification and monitoring of the communications system, and by addressing maintenance correctable issues related to maintenance of communication systems. See FAQ II-5-K (page		

Organization	Yes or No	Question 2 Comment
15).		
Bonneville Power Administration	Yes	
Electric Market Policy	Yes	
Entergy Services, Inc	Yes	
Georgia System Operations Corporation	Yes	
Oncor Electric Delivery	Yes	
Ontario Power Generation	Yes	
Operations and Maintenance	Yes	
Saskatchewan Power Corporation	Yes	
Western Area Power Administration	Yes	

3. Within Table 1a, the draft standard establishes maximum allowable maintenance intervals for the various types of devices defined within the definition of "Protection System", where nothing is known about the in-service condition of the devices. Do you agree with these intervals? If not, please explain in the comment area.

Summary Consideration: Most respondents disagreed with the specified maximum allowable intervals to some degree or another. The disagreements ranged over the full spectrum of activities specified in the Tables, and often corresponded to the disagreements related to the activities. The intervals within Table 1a were reconsidered (with minor changes – eliminating the 3-month control circuit activity) by the SDT when responding to the comments.

Organization	Yes or No	Question 3 Comment
Green Country Energy LLC	No	1) Protection System Control Circuitry (Trip Circuits) (except for UFLS or UVLS) also The maintenance activity causes excessive breaker operation, and the intrusive nature increases the risk of subsequent Misoperations on operating units. System configuration of many plants will require an extensive interruption of total plant production to complete the test. 2) Protection System Control Circuitry (Trip Circuits) (UFLS or UVLS systems only) The maintenance activity causes excessive breaker operation, and the intrusive nature increases the risk of subsequent Misoperations on operating units. System configuration of many plants will require an extensive interruption of total plant production to complete the test.
Response: The SDT thanks you for your comments. **1. The overall Protection System Control Circuitry can be addressed in segments, as long as all portions are verified or tested as required. Depending on the arrangement of the DC control circuit, it may be necessary to only trip the breaker itself once. See FAQ II-4-E (page 11).** **2. The overall Protection System Control Circuitry can be addressed in segments, as long as all portions are verified or tested as required. Depending on the arrangement of the DC control circuit, it may be necessary to only trip the breaker itself once. See FAQ II-4-E (page 11).**		
Public Service Enterprise Group Companies	No	1) Table 1a Station dc supply (that uses a battery and charger). The 6 year test requires that the charger perform as designed. PSE&G usually applies redundant battery chargers. PSE&G would like the drafting team to consider if it is appropriate to not require the 6 year battery charger tests if a battery owner uses primary and backup battery chargers. PSEG believes that the use of a redundant charger will maintain reliability at the same level or better level as provided by testing a single charger. 2) For protection system control circuits components (breaker trip coil only), suggest that a sub category with redundant trip coils be added with longer maintenance interval to allow for the reliability provided by

Organization	Yes or No	Question 3 Comment
		redundancy.
Response: The SDT thanks you for your comments. **1. The performance of the battery charger is critical to the performance of the protection system. The SDT has modified the standard to simplify the requirements related to maintenance of the battery charger. If condition-based maintenance is applied in accordance with Table 1b, the battery alarms could automatically (or manually) switch to the redundant charger. Redundancy may also provide more flexibility in addressing issues discovered during maintenance.** **2. Even with redundant equipment, it is essential that all equipment be tested according to the requirements of this standard to ensure proper function and to support the reliability advantages presented by redundancy. The requirements related to this subject have been extensively modified.**		
Ameren	No	1) The "zero tolerance" structure proposed combined with the large volume and complexity of Protection System components forces an entity to shorten their intervals well below maximum. We instead propose a calendar increment grace period in which a small percentage of carryover components would be tracked and addressed. For example, up to 10% of all breaker trip coils subject to the 3 month "verify breaker trip coil continuity" could carry over into the first month of the next period. And for example, up to 5% of an entity's communication channel 6 year verifications could carryover into the next year. These carryover components would be addressed with high priority in that next calendar increment. There are many barriers to 100% completion or zero tolerance. Barriers include sheer volume, obtaining outages, resource availability, coordination, and documentation (over ten thousand components in our utility alone; taking a BES outage to permit maintenance can incur a greater reliability risk than delaying the maintenance; emergent issues such as major storms impact resource availability; coordination with interconnected neighbors, their resources and maintenance timing; record keeping errors or oversights; etc.) 2) Alternatively, components with intervals less than a year should be stated in terms of the number of times annually it should be performed, rather than a short duration interval. The expectation is that they would be roughly equally spaced throughout the year; for example quarterly instead of 3 months. Comment 1 grace period would still apply to components with maximum intervals of 1 year or greater. 3) Some of our maintenance intervals are shorter than maximum. Please confirm that documentation is only to be kept for two of the entity's intervals, not two of the maximum interval. 4) Please add standard language or FAQ near 2D on p 18 that an entity can validly use an interval with % tolerance to achieve maintenance goals, as long as the applicable maximum interval is honored.
Response: The SDT thanks you for your comments. **1. The SDT is concerned that a "grace period", if permitted, would be used to establish a de-facto longer interval, and that the established intervals would thus not be measurable. Additionally, FERC Order 693 directed that NERC establish maximum maintenance intervals, and allowing for a "grace**		

Organization	Yes or No	Question 3 Comment
period" would not conform to this directive. **2. Simply stating the number of times annually that these devices must be maintained, with a tacit expectation that the maintenance be spaced throughout the year, does not ensure that they will be tested thusly. To achieve the periodicity of the testing, it is essential that the requirement specify such periodicity. The SDT is concerned that a "grace period", if permitted, would be used to establish a de-facto longer interval, and that the established intervals would thus not be measurable. Additionally, FERC Order 693 directed that NERC establish maximum maintenance intervals, and allowing for a "grace period" would not conform to this directive.** **3. The data retention has been modified in consideration of your comments. The revised language reads as follows:** The Transmission Owner, Generator Owner, and Distribution Provider shall each retain documentation of the two most recent performances of each distinct maintenance activity for the Protection System components, or to the previous on-site audit date, whichever is longer. **4. You may define your program within the parameters expressed within the standard as long as you adhere both to your program and to the Standard.**		
Exelon Generation Company, LLC	No	1. All maintenance activities should include a "grace" period to allow for changes to a nuclear generator's refueling schedule and emergent conditions that would prevent the safe isolation of equipment and/or testing of function. "Grace" periods align with currently implemented nuclear generator's maintenance and testing programs. 2. Table 1a page 6 regarding the 3 Month "Protection System Control Circuitry (Breaker Trip Coil Only) (except for UFLS or UVLS)" states that the maintenance activity shall verify the continuity of the breaker trip circuit including the trip coil. There is unclear guidance on how this activity is to be performed, particular on generator output breakers. Does this activity imply actual trip testing of the breaker itself? If so, performing this type of activity with the generator on-line puts the unit at risk without any commensurate increase in reliability to the bulk electric system. If this is the case it is requested that this particular test is extended from 3 months to 24 months to align with nuclear generating units refueling cycle. If not, and this activity is simply verification of continuity by means of light indication; then please clarify in Table 1a.
Response: The SDT thanks you for your comments. **1. The SDT considered this issue when developing the intervals, and realizes that some entities may need to perform certain maintenance activities more frequently to assure that the activities are performed within the required intervals. Specifically, for generation facilities, there would seem to be numerous opportunities within the 6-year or longer intervals to perform the required maintenance during a scheduled plant outage, and maintenance with shorter intervals can be characterized as non-intrusive maintenance, more of an inspection than anything else; the SDT believes that this maintenance can be done on-line. The SDT is concerned that a "grace period", if permitted, would be used to establish a de-facto longer interval, and that the established intervals would thus not be measurable. Additionally, FERC Order 693 directed that NERC establish maximum maintenance intervals, and allowing for a "grace period" would not conform to this directive. Please refer to Section 8 of the Supplementary Reference Document for a discussion on this issue.**		

Organization	Yes or No	Question 3 Comment
2. The SDT has removed this requirement.		
Entergy Services, Inc	No	1. A 3 month interval activity is likely to drive an entity to perform that activity every 2 months in a zero tolerance, 100% completion, mandatory compliance environment. There should be an allowance for a grace period on monthly designated activities, for instance a one month grace period, unless the intention is to have the activity performed more frequently than indicated. Additional guidance is needed on the monthly interval designations. Is it okay, for instance, to do all four tasks (3 month interval) at one time? Instinctively the answer should be "no", but if following the "calendar year" allowance, then maybe it is. Are we non-compliant on a 3 month interval task if we go one single day over the due date? Instinctively the answer should be "no", but some additional guidance should be provided. For example, the standard might be more understandable if it indicated that if the interval is "four per year" (or 3 month interval), then it is allowed to perform these tasks no less than 45 days apart from each other as long as four are done within a calendar year, etc. 2. We believe the 3 month trip coil task activity could actually shorten the life of the trip coil, introduce unpredictable trip coil failures, and increase the risk of an in-service failure of the trip coil if the verification is done by tripping the breaker each time. Increasing the risk of failure is counter-productive the intent of the standard.
Response: The SDT thanks you for your comments. **1. The standard specifies MAXIMUM allowable intervals for the various activities; entities must manage their program however they see fit to adhere to those intervals. The SDT is concerned that a "grace period", if permitted, would be used to establish a de-facto longer interval, and that the established intervals would thus not be measurable. Additionally, FERC Order 693 directed that NERC establish maximum maintenance intervals, and allowing for a "grace period" would not conform to this directive.** **2. The SDT has removed this requirement.**		
MRO NERC Standards Review Subcommittee	No	A. It looks like for unmonitored systems, breaker trip coils are to be checked for continuity every 3 months. There is no mention of auxiliary relays. In the partially monitored and fully monitored sections, trip coils and auxiliary relays are lumped in the same category at 6 calendar years each. What happened to the aux relays in the unmonitored section? Also, note that the term "trip coils" is used, not "breaker trip coils" in the type of component category. B. The maintenance interval for Protection System Control Circuitry (Trip coils and Auxiliary relays) is 6 years, but the interval for relay output contacts is 12 years when these components are partially monitored. It seems that these things all have a similar reliability. If commissioning tests are done diligently, the trip DC availability is continuously monitored and the trip coil itself is continuously monitored, no functional tests should be needed. The only thing that would be done at PM time would be to ensure that the alarming method is still

Organization	Yes or No	Question 3 Comment
		functional.
Response: The SDT thanks you for your comments. **A. The SDT has removed this requirement.** **B. In your discussion (with continuous monitoring of the trip dc and trip coil), you have effectively established most of the monitoring to move to either Table 1b or even Table 1c. You are encouraged to carefully review the Monitoring Attributes for these higher levels of monitoring; if you satisfy the attributes, you may be able to further minimize hands-on maintenance.**		
NextEra Energy Resources	No	a. (i) Protective relays, (ii) Protection Control Circuitry (Trip Circuits) and (iii) Protection System Communications Equipment and Channels should be changed from 6 calendar years to 8 calendar years. Based on FPL Group's experience and Reliability Centered Maintenance (RCM) program, FPL Group has established an 8 year program and has found that an aggressive 6 year program would not substantially increase the effectiveness of a preventative maintenance program. b. Battery visuals should be changed from 3 months to 6 months. Electrolyte levels of today's lead-calcium batteries are relatively stable for a 6 month period compared to lead-antimony batteries used in the past. c. The maximum maintenance interval for communications equipment should be changed from 3 months to 12 months. Based on FPL Group's experience and RCM program, FPL Group has established a 12 month program that is effective. d. Additionally, NextEra Energy concurs with other entities comments concerning this question: Imposing inflexible maximum interval requirements has the same basic problems as imposing inflexible minimum task requirements. The inflexible "maximum interval" approach fails to recognize the harmful effects of over-maintenance and precludes the ability of entities to tailor their maintenance program based on their configurations and operating experience. The maximum interval approach also has same perverse consequences for entities with redundant systems as the minimum interval approach. e. Furthermore, the rigid maximum interval approach embodied herein does not sufficiently take into consideration common natural disaster situations. Several of the preventive maintenance tasks proposed in this standard have a maximum interval of 3 months, which is problematic under normal circumstances and unworkable when routine maintenance activities have a much lower priority than emergency repair and restoration. An interval as short as this does not provide a sufficient maintenance scheduling horizon to complete the tasks. The SDT could attempt to address this shortfall by modifying the draft to account for natural disaster situations. For example, the FERC-approved NERC reliability standard FAC-003 for Vegetation Management does include such allowances for natural disasters, such as tornados and hurricanes. However, even if that specific problem is addressed, the fundamental problems created by an

Organization	Yes or No	Question 3 Comment
		overly prescriptive maximum interval approach remains.
Response: The SDT thanks you for your comments. **a. The SDT believes that the 6-year maximum allowable intervals, to which you refer, are appropriate. The intervals within the standard are based on the experience of the SDT and of the NERC System Protection and Control Task Force (SPCTF). The SPCTF also validated these intervals via an informal survey that represented about 2/3 of the net-energy-for-load within NERC, and by comparison to IEEE surveys. See Supplementary Reference Document Section 8 (page 9). An entity may implement a Performance Based maintenance program if they wish to apply their experience.** **b. The SDT agrees that a healthy modern lead acid battery can go for extended periods of time beyond 3 months without requiring watering. However, checking cell electrolyte level not only indicates the need for battery watering, it is an indication of an individual cell's health and needs to remain at the Maximum Maintenance Interval of 3 months. To avoid the confusion that the Maintenance Activity listed in Table 1 was to water the battery at the specified 3 month interval, the Drafting Team has changed the wording of the Maintenance Activity from "verify proper" to "check" electrolyte level.** **c. The 3 month interval is for inspection of unmonitored equipment. The SDT felt that this is appropriate for carrier channels or for leased audio channels that have a chance of failure and would result in an overtrip or failure to trip if ignored. It is possible to extend the interval for performance based systems if the entity has applicable data.** **d. FERC Order 693 directs that NERC establish maximum allowable intervals. For entities that wish to establish a performance-based maintenance program using experience, the standard DOES allow for that.** **e. The SDT believes that the level of prescription within the standard is necessary to satisfy the guidance in FERC Order 693, and also to address observations from the Compliance Monitoring entities (the Regional Entities and NERC) that PRC-005-1 is excessively general. FERC Order 672 also specifies that NERC Standards should be clear and unambiguous. The SDT has therefore defined the minimum activities necessary to implement an effective PSMP.**		
CenterPoint Energy	No	a. See CenterPoint Energy's comments made in response to question 2. Imposing inflexible maximum interval requirements has the same basic problems as imposing inflexible minimum task requirements. The inflexible "maximum interval" approach fails to recognize the harmful effects of over-maintenance and precludes the ability of entities to tailor their maintenance program based on their configurations and operating experience. The maximum interval approach also has same perverse consequences for entities with redundant systems as the minimum interval approach. b. Furthermore, the rigid maximum interval approach embodied herein does not sufficiently take into consideration common natural disaster situations. Several of the preventive maintenance tasks proposed in this standard have a maximum interval of 3 months, which is problematic under normal circumstances and unworkable when routine maintenance activities have a much lower priority than emergency repair and restoration. An interval as short as this does not provide a sufficient maintenance scheduling horizon to complete the tasks. The SDT could attempt to address this shortfall by modifying the draft to account for natural disaster situations. For example, the FERC-approved NERC reliability standard FAC-003 for

Organization	Yes or No	Question 3 Comment
		Vegetation Management does include such allowances for natural disasters, such as tornados and hurricanes. However, even if that specific problem is addressed, the fundamental problems created by an overly prescriptive maximum interval approach remains.
Response: The SDT thanks you for your comments. **a. The SDT believes that the level of prescription within the standard is necessary to satisfy the guidance in FERC Order 693, and also to address observations from the Compliance Monitoring entities (the Regional Entities and NERC) that PRC-005-1 is excessively general. FERC Order 672 also specifies that NERC Standards should be clear and unambiguous. The SDT has therefore defined the minimum activities necessary to implement an effective PSMP.** **b. The SDT considered this issue when developing the intervals, and realizes that some entities may need to perform certain maintenance activities more frequently to assure that the activities are performed within the required intervals. Specifically, for generation facilities, there would seem to be numerous opportunities within the 6-year or longer intervals to perform the required maintenance during a scheduled plant outage, and maintenance with shorter intervals can be characterized as non-intrusive maintenance, more of an inspection than anything else; the SDT believes that this maintenance can be done on-line. The SDT is concerned that a "grace period", if permitted, would be used to establish a de-facto longer interval, and that the established intervals would thus not be measurable. Additionally, FERC Order 693 directed that NERC establish maximum maintenance intervals, and allowing for a "grace period" would not conform to this directive. Please refer to Section 8 of the Supplementary Reference Document (page 9) for a discussion on this issue.**		
FirstEnergy	No	Although we agree with the proposed maintenance intervals, there may be extenuating circumstances beyond an entity's control that could delay maintenance on a particular protection system. We ask the SDT to consider adding a footnote to these intervals that allows a grace period of up to three months when outages necessary for maintenance must be delayed due to unusual system conditions or other issues where an outage would be detrimental to the entity's system.
Response: The SDT thanks you for your comments. The SDT considered this issue when developing the intervals, and realizes that some entities may need to perform certain maintenance activities more frequently to assure that the activities are performed within the required intervals. Specifically, for generation facilities, there would seem to be numerous opportunities within the 6-year or longer intervals to perform the required maintenance during a scheduled plant outage, and maintenance with shorter intervals can be characterized as non-intrusive maintenance, more of an inspection than anything else; the SDT believes that this maintenance can be done on-line. The SDT is concerned that a "grace period", if permitted, would be used to establish a de-facto longer interval, and that the established intervals would thus not be measurable. Additionally, FERC Order 693 directed that NERC establish maximum maintenance intervals, and allowing for a "grace period" would not conform to this directive. Please refer to Section 8 of the Supplementary Reference Document (page 9) for a discussion on this issue.		
American Transmission Company	No	1. ATC is concerned that the proposed standard would result in entities being required to use outdated testing techniques and or practices. We believe that the standard should identify the "what" and not the "how". The identification of specific testing techniques and/or practices would likely result in entities being

Organization	Yes or No	Question 3 Comment
		prevented from implementing improved techniques and/or practices. (The standard would have to be updated and receive FERC approval before entities could test/implement improved testing techniques and/or practices.) 2. An example of the standard directing the how is with station batteries. The "specific gravity" test, proposed in the standard, is being used less or not at all by some registered entities because a more accurate method that is less intrusive and provides more accurate results has been developed. (This standard would basically require entities to go backwards in testing practices.)This standard should not prevent the use of improved techniques and/or practices.
Response: The SDT thanks you for your comments. **1. In consideration for your concern, the Drafting Team has revised Table 1 to identify more of what is required for the station dc supply activities and eliminated most of the "how to do it".** **2. All references to specific gravity and temperature testing have been removed from the revised standard.**		
City Utilities of Springfield, MO	No	CU agrees in general with many of the maximum maintenance intervals. However, we disagree with the necessity to verify the continuity of trip coils every 3 months. We would be interested to know what basis the committee used to arrive at all intervals. Furthermore, it is our opinion that even if a component is unmonitored, the interval should not surpass the manufacturer's recommendations.
Response: The SDT thanks you for your comments and has removed this requirement.		
ITC Holdings	No	1. Does the standard require that time or condition based maintenance programs monitor countable events to identify significant problems in particular relay segments, and then adjust the maintenance interval accordingly? 2. On page 6: Please clarify the use of "Calendar Year" Our understanding is that if a relay is maintained on August 31, 2003 on a 6 year interval, it will not be overdue until January 1, 2010. Is this correct?? 3. On Page 7: What is the basis for 18 months? We believe 2 calendar years would be more appropriate. 4. On Pages 6, 10: What is the basis of the 6 calendar year interval for functional trip tests? We request that this be changed to a 10 calendar year interval. We follow a 10 calendar year interval that has proven to be satisfactory. Decreasing the interval to 6 calendar years will result in a major increase in our maintenance expenses without a corresponding increase in reliability. 5. On Page 9: If it is being verified ok every 3 months, what is the basis of the 6 calendar year interval for Communication equipment? ITC communications systems are partially monitored and therefore required to

Organization	Yes or No	Question 3 Comment
		perform this testing every 12 years. However, ITC would like to know the basis of the 6 year interval for informational purposes. 6. On pages 6, 8, 11, 13, 14 and 19: The maximum maintenance interval (when the associated UVLS or UFLS system is maintained) should be shown as the actual "6 Calendar Years".? 7. On Page 1 of Attachment A: Please provide an example in the reference of the proper way of adjusting the interval based on test results. 8. On Pages 7, 8, 12: It is our understanding that adequate maintenance can be achieved by performing either one of the two maintenance activities in cases where there is an "or", is that correct? 9. On Page 14: For the bottom two rows on page 14 we believe there is a typo and it should read "Level 2" not "Level 1". 10. On Page 13: Do power line carrier schemes that provide a remote alarm if a daily check back test fails, meet level 2 monitoring requirements? 11. In Table 1: What is the basis for the 6 year interval for the battery systems? This test would be an additional test for ITC. We would prefer to perform this additional test with the relay periodic maintenance on a 10 year interval.

Response: The SDT thanks you for your comments.

1. No, the standard does not require that countable events be analyzed for determination of intervals in time-based or condition-based maintenance programs. However, excessive poor operation may trigger additional activities as part of a corrective action plan per PRC-004 in response to Misoperations.

2. Your understanding is incorrect. A maintenance activity last completed in 2003 on a 6-year interval would next need to be maintained sometime in 2009. (See Supplementary Reference Document Section 8.4, page 13)

3. The SDT believes that 18-month is the appropriate interval, based on common industry practice.

4. The SDT believes that 6-years is the appropriate interval, based on common industry practice. For entities that wish to establish a performance-based maintenance program using experience, the standard DOES allow for that.

5. The 6 year interval is mostly driven by the needs of power line carrier channels and the use of analog auxiliary tuning components in the communications systems. The relay communications systems intervals were based on the experiences of SDT and NERC System Protection Committee Task Force members.

6. The SDT has modified the standard in consideration of your comment to include the specific intervals for the various components related to UFLS/UVLS, with the exception of the dc supply. The maintenance for the dc supply for UFLS/UVLS was left related to the maintenance of the

Organization	Yes or No	Question 3 Comment
UVLS/UFLS system because the SDT believed that this activity should be tied to the specific intervals needed for the relays. **7. See FAQ IV-3-H (page 26).** **8. You are correct in your statement that the Maintenance Activity of verifying that the station battery can perform as designed can be met by completing either of the two activities listed in Table 1 in the prescribed Maximum Maintenance Interval.** **9. Thank you. You are correct; these table entries have been modified accordingly.** **10. Yes. A remote alarm daily auto-check back as you describe satisfies the Level 2 monitoring attributes for channel performance in a power line carrier system.** **11. The SDT believes that extending the Maximum Maintenance Interval for station batteries beyond that listed in Table 1 would degrade the Protection System by not detecting compromises to the performance of the station dc supply during the extended interval.**		
Platte River Power Authority Maintenance Group	No	Electro-mechanical relays are historically out of tolerance well before the 6 year maximum allowable maintenance intervals defined within table 1a.
Response: The SDT thanks you for your comments. The SDT considered this issue when developing the intervals, and realizes that some entities may need to perform certain maintenance activities more frequently to assure that the activities are performed within the required intervals.		
Florida Municipal Power Agency, and its Member Cities	No	1. FMPA agrees in general with many of the maximum maintenance intervals; however we have been unable to determine what basis was used to arrive at the time based intervals provided in the tables. Further explanation would be appreciated 2. FMPA is concerned with the use of the term “continuous” in Table 1c. As stated, it would seem that, on loss of communications that would communicate the alarm, thereby causing a loss of “continuous” monitoring and alarming, the entity who invested in a reliability improving monitoring system would be found non-compliant with an infinitesimal maintenance period required for “continuous” monitoring. Therefore, FMPA recommends using “not applicable” or some other term in this column.
Response: The SDT thanks you for your comments. **1. The intervals within the standard are based on the experience of the SDT and of the NERC System Protection and Control Task Force (SPCTF). The SPCTF also validated these intervals via an informal survey that represented about 2/3 of the net-energy-for-load within NERC, and by comparison to IEEE surveys. See Supplementary Reference Document Section 8 (page 9).** **2. The SDT believes that the maintenance is indeed being done “continuously”. If the alarming method is not functional, you’ve fundamentally dropped back to Level 1 or Level 2 monitoring, depending on the component.**		

Organization	Yes or No	Question 3 Comment
E.ON U.S.	No	1. Generally, E.ON U.S. requests that the SDT provide the basis for the proposed changes in maintenance time lines. E ON U.S.'s existing maintenance intervals are based on actual operating experience. Not having been provided with the basis for the proposed intervals, the time lines appear arbitrary. E.ON U.S. currently has an 8-year interval for combustion turbines vs. the 6-year interval provided here. The E.ON U.S. interval is based on the Company's experience with this equipment. E.ON U.S. suggests that the SDT provide some consideration to individual entities historic practices. 2. It is difficult to track "18 months". Maintenance intervals should be in expressed in number of years. 3. E ON U.S. also does not understand the basis for the 3 months maintenance schedule on breaker trip coils. Typically, the circuit breaker closed indication is wired through the breaker trip coil. Thus there could not be a breaker closed indication without a good breaker trip coil. So, this test should be considered continuous monitoring which may not even require documentation except in case of failure.
Response: The SDT thanks you for your comments. **1. See Supplementary Reference Document, Section 8 (page 9). An entity's historical practices and results can be used to establish a performance-based maintenance program as described within the standard.** **2. The SDT believes that the 18-month interval is appropriate. If you wish, you may do these activities more frequently to aid in your maintenance tracking, as long as you adhere to the requirements within the standard.** **3. If this indication is local (for example, a lamp), 3-month inspections of the lamp state are necessary to satisfy the requirement. If the indication is an alarm to a location such as a control room, control center, etc, this may satisfy for either Level 2 or Level 3 monitoring as you suggest.**		
Transmission Owner	No	a. i) Protective relays, ii) Protection Control Circuitry (Trip Circuits) and iii) Protection System Communications Equipment and Channels should be changed from 6 calendar years to 8 calendar years. Based on FPL's experience and Reliability Centered Maintenance (RCM) program, FPL has established an 8 year program and has found that an aggressive 6 year program would not substantially increase the effectiveness of a preventative maintenance program. b. Battery visuals should be changed from 3 months to 6 months. Electrolyte levels of today's lead-calcium batteries are relatively stable for a 6 month period compared to lead-antimony batteries used in the past. c. The maximum maintenance interval for communications equipment should be changed from 3 months to 12 months. Based on FPL's experience and RCM program, FPL has established a 12 month program that is effective.
Response: The SDT thanks you for your comments.		

Organization	Yes or No	Question 3 Comment
a. The SDT believes that the 6-year interval is appropriate. An entity may implement a Performance Based maintenance program if they wish to apply their experience. **b. The SDT agrees that a healthy modern lead acid battery can go for extended periods of time beyond 3 months without requiring watering. However, checking cell electrolyte level not only indicates the need for battery watering, it is an indication of an individual cell's health and needs to remain at the Maximum Maintenance Interval of 3 months. To avoid the confusion that the Maintenance Activity listed in Table 1 was to water the battery at the specified 3 month interval, the Drafting Team has changed the wording of the Maintenance Activity from "verify proper" to "check" electrolyte level.** **c. The 3 month interval is for inspection of unmonitored equipment. The SDT felt that this is appropriate for carrier channels or for leased audio channels that have a chance of failure and would result in an overtrip or failure to trip if ignored. It is possible to extend the interval for performance based systems if the entity has applicable data.**		
Illinois Municipal Electric Agency	No	1. IMEA is concerned the maximum allowable maintenance intervals may be too prescriptive for transmission subsystems that essentially operate radially. 2. Please see comment under Question 7. 3. Given the magnitude of reliability-related initiatives currently in progress, additional time is needed to evaluate these intervals, particularly for communications equipment, dc supply, and UFLS relays.
Response: The SDT thanks you for your comments. **1. The intervals are established for Protection Systems on BES components. If you believe that some of your system components are not BES that is an issue relative to your region's BES definition.** **2. See response to comment under Question 7.** **3. An Implementation Plan is provided to allow systematic implementation of these intervals. If you are concerned about the time available to develop comments on posted drafts, be advised that the posting period is determined according to the NERC Reliability Standards Development Process. The SDT is providing the maximum comment time available.**		
PacifiCorp	No	No comment.
Duke Energy	No	1. Our comments are limited to Table 1a. More clarity is needed for many of the Maintenance Activities before assessing whether or not the intervals are reasonable. But as a general comment we would like to understand the basis used to develop all of the intervals, and how that basis compares with research done by the Electric Power Research Institute (EPRI). It is our understanding that NERC did an industry survey of maintenance intervals and we would like to see the results of that survey as well. Specific comments:

Organization	Yes or No	Question 3 Comment
		2. Protective Relays 6 calendar years is okay. 3. Voltage and Current Sensing Devices Inputs to Protective Relays We question the logic for a 12-year interval. Proper functioning should be verified at commissioning, and then anytime thereafter if changes are made in a PT or CT circuit. Additional periodic checks may be warranted as suggested in Table 1A, however no additional checking should be required where circuit configuration will inherently detect problems with a PT or CT. For example, PTs & CTs that are monitored through EMS or microprocessor relays will be alarmed when they are out of specification. 4. Protection System Control Circuitry (Breaker Trip Coil Only) (except for UFLS or UVLS) In locations where the continuity of the circuit is not monitored (via a light in the path or through a microprocessor relay) this would be a very complicated test, which could impact reliability, especially if done every three months. 5. Protection System Control Circuitry (Trip Circuits) (except for UFLS or UVLS) Need clarity on exactly what the activity is to include. We believe proving one output all the way to the trip coil is appropriate. Proving every output and every auxiliary contact, to the trip coil would be unnecessarily invasive and could impact reliability, even if done every 6 calendar years. 6. Protection System Control Circuitry (Trip Circuits) (UFLS/UVLS Systems Only) Interval is okay, but we disagree with tripping the breakers proving the output of the relay should be sufficient. Systems that have all load shed on distribution circuits should require trip output be confirmed but should not be required through to the trip coil due to constraints in tying distribution load. 7. Station dc supply (that has as a component any type of battery) 3 month and 18 month intervals are probably okay, depending on what is required to “verify continuity and cell integrity of the entire battery” and “inspect the structural integrity of the battery rack”. 8. Station dc supply (that has as a component Valve Regulated Lead-Acid batteries) 3 calendar years and 3 month intervals are probably okay, depending on what is required for the “performance or service capacity test”. 9. Station dc supply (that has as a component Vented Lead-Acid batteries) 6 calendar year and 18 month intervals are probably okay, depending on what is required for the “performance, service or modified performance capacity test”. 10. Protection system communication equipment and channels 3 months and 6 calendar years seem reasonable, depending upon what is included in the substation inspection, and what is required for power-line carrier systems. 11. UVLS and UFLS relays that comprise a protection scheme distributed over the power system Can’t comment on the 6 calendar year interval until we get more clarity regarding the meaning of “distributed over

Organization	Yes or No	Question 3 Comment
		the power system".
Response: The SDT thanks you for your comments. **1. See Supplementary Reference Document, Section 8 (page 9).** **2. The SDT thanks you for your support.** **3. For unmonitored systems, the SDT believes that the interval specified in Table 1a is appropriate. If alarming is available for anomalies, you may be able to use Table 1c with continuous monitoring.** **4. Table 1a has been modified to remove the activities to which you refer.** **5. See Supplementary Reference Document, Section 15.3 (page 22).** **6. The requirements relating to Protection System Control Circuitry for UFLS/UVLS only do not require tripping of the breaker.** **7. Thank you for agreeing with the Maximum Maintenance intervals associated with the Maintenance Activities. The SDT has modified the standard concerning the requirement to verify cell integrity (See FAQ II-5-C, page 12), and continuity (See FAQ II-5-D, page 13) and inspecting for the structural integrity of the battery rack (See FAQ II-5-H, page 15).** **8. How to conduct a performance and service capacity test for Valve Regulated Lead-Acid batteries are explained in detail in various available reference books. One of the options available to the Protection System owner who is responsible for maintaining a station dc supply that can perform as designed is to conduct a performance or service capacity test within the Maximum Maintenance Interval of Table 1 that will verify that a VRLA battery will satisfy the design requirements (battery duty cycle) of the dc system.** **9. How to conduct a performance service or modified performance capacity test for Vented Lead-Acid Batteries is explained in detail in various available reference books.** **10. These intervals are for power line carrier channels as well as other types of communications channels.** **11. See FAQ II-7-C (page 19).**		
Electric Market Policy	No	Recommend that all Level 1 three-month maintenance intervals be changed to a quarterly based system where only 4 inspections are required per year. Given a 3 month maximum interval, activities would need to be scheduled every 2 months, which would result in six inspections per year. Our experience of four inspections per year has proven to be successful.
Response: The SDT thanks you for your comments. The SDT believes that the "3 Calendar Month" interval is necessary to maintain the periodicity of the maintenance activities. "Once per calendar quarter" would allow up to a 6-month practical interval, which would not maintain this periodicity. This DOES permit entities to use four inspections per year provided that they carefully manage their maintenance activities.		

Organization	Yes or No	Question 3 Comment
SERC (PCS)	No	Recommend that all Level 1 three-month maintenance intervals be changed from 3 months to quarterly. Given a 3 month maximum interval an entity would need to schedule these tasks every 2 months. This would result in six inspections per year. In the experience of many of our utilities, four inspections per year have proven to be successful.
Response: The SDT thanks you for your comments. The SDT believes that the "3 Calendar Month" interval is necessary to maintain the periodicity of the maintenance activities. "Once per calendar quarter" would allow up to a 6-month practical interval, which would not maintain this periodicity. This DOES permit entities to use four inspections per year provided that they carefully manage their maintenance activities.		
Indianapolis Power & Light Co.	No	See comments in number 2 above.
Response: The SDT thanks you for your comments. See response to comments in Question 2.		
Austin Energy	No	See item # 10 Comments
Response: The SDT thanks you for your comments. See Question #10 Response		
Wolverine Power Supply Cooperative, Inc.	No	See question 2 response
Response: The SDT thanks you for your comments. See Question #2 Response		
SCE&G	No	Several maximum maintenance intervals are 3 months. Since this is an absolute maximum period, entities would need to schedule on a 2 month basis to assure the 3 month maximum is met, i.e., 6 times per year. We recommend that 3 month periods be increased to 4 months which allows scheduling every 3 months. Other methods of achieving the same result are to state periodic requirements of quarterly or 4 times per year.
Response: The SDT thanks you for your comments. The SDT believes that the "3 Calendar Month" interval is necessary to maintain the periodicity of the maintenance activities. "Once per calendar quarter" or "four times per year" would allow up to a 6-month practical interval, which would not maintain this periodicity. This DOES permit entities to use four inspections per year provided that they carefully manage their maintenance activities.		
Wisconsin Electric	No	Similar to comments in #7 above: It is our practice on distribution-level protection systems to utilize a 6 year interval plus/minus 1 year to accommodate potential scheduling conflicts. This is consistent with other LSE's relay testing practices as well. Thus the potential 7 year maintenance interval would be a violation of the draft

Organization	Yes or No	Question 3 Comment
		requirements. The maintenance intervals in this standard should be increased accordingly for distribution protection system equipment.
Response: The SDT thanks you for your comments. The SDT considered this issue when developing the intervals, and realizes that some entities may need to perform certain maintenance activities more frequently to assure that the activities are performed within the required intervals. Specifically, for generation facilities, there would seem to be numerous opportunities within the 6-year or longer intervals to perform the required maintenance during a scheduled plant outage, and maintenance with shorter intervals can be characterized as non-intrusive maintenance, more of an inspection than anything else; the SDT believes that this maintenance can be done on-line. The SDT is concerned that a "grace period", if permitted, would be used to establish a de-facto longer interval, and that the established intervals would thus not be measurable. Additionally, FERC Order 693 directed that NERC establish maximum maintenance intervals, and allowing for a "grace period" would not conform to this directive. Please refer to Section 8 of the Supplementary Reference Document for a discussion on this issue.		
Pepco Holdings Inc.	No	Table 1a requires verification of the continuity of the breaker trip circuit every three months in the absence of a trip coil monitor. Recommend maintenance interval to match that for other protection system control circuitry (6 years).
Response: The SDT thanks you for your comments. The SDT has modified the standard to remove the requirement to which you refer.		
Nebraska Public Power District	No	Table 1a, for Station DC supply (that has as a component - Valve Regulated Lead-Acid batteries) establishes a Maximum Maintenance Interval of 3 Calendar Years for the following Maintenance Activity: Verify that the station battery can perform as designed by conducting a performance or service capacity test of the entire battery bank. What is the basis for this interval? NPPD's experience indicates that a 5 Year interval is adequate, especially during the early service life of the battery bank, with increasing frequency as the bank ages.
Response: Thank you for your comment concerning the Maximum Maintenance Interval for Valve Regulated Lead-Acid batteries (VRLA). Due to the failure mode and designed service life of VRLA batteries compared to a Vented Lead-Acid batteries, the SDT believes that extending capacity testing of a VRLA battery beyond the maximum maintenance interval of 3 calendar years in Table 1 cannot be justified regardless of what the battery manufacturers of VRLA batteries recommend. This is especially true in the later periods of service life beyond 3 calendar years as noted by many utilities requiring total replacement of their VRLA batteries after 4 years of service. It appears that your practices are actually addressing Vented Lead Acid batteries, rather than Valve Regulated Lead-Acid batteries.		
Dynegy	No	The 3 month interval in Table 1a for verification of the continuity of the breaker trip circuit is only feasible if this verification can be done by inspection versus testing (see Response to Question 2).
Response: The SDT thanks you for your comment and has removed the requirement.		

Organization	Yes or No	Question 3 Comment
Southern Company	No	1. The 3 month intervals specified for the trip coil monitoring and communication circuit testing are too frequent. Our experience is that trip coils rarely burn open and don't need to be checked this often. If no monitoring currently exists, manually checking the circuit (until a time where monitoring can be installed) may inadvertently cause a trip. This adds risk to the reliability. Thus, requiring the trip circuits to be tested every 3 months may reduce the reliability of the BES. 2. Protection System Control Circuitry (Breaker Trip Coil Only) (Except for UFLS or UVLS) In order to reduce the risk of reducing Bulk Electric System reliability a better time interval for testing un-monitored trip coils would be 12 months. This may need to be 24 months for Nuclear Generating units. 3. Some allowance for a grace period (beyond the specified intervals) should be considered for all classifications. Outage schedules are known to change unexpectedly due to unforeseen circumstances. A grace period tolerance of +25% for specified maintenance intervals less than 12 months and of +1yr for those intervals specified as greater than 12 months is recommended. Typically at a nuclear plant a grace period is allowed by plant procedures. This grace period is defined as an additional 25 percent of the original schedule interval for the task. The grace period is provided as reasonable flexibility to allow for alignment with surveillance activities and equipment maintenance outages and to better manage the use of station resources. Some maintenance activities will require an outage to perform the work. Refueling outages are typically performed on an 18 month or 24 month refueling cycle. However, refueling outages do not always fall exactly on that interval. It is possible that the duration between one outage to the next may exceed 18 or 24 months. For activities that are required to be complete on a calendar year cycle this should not be an issue since the outages are normally scheduled several months prior to the end of the year. However, if the interval is a monthly interval there could be a problem with scheduling the maintenance such that it does not impact planned maintenance activities, surveillance requirements, and station resources. 4. Tables 1a, 1b and 1c have several instances where inspection and testing of DC circuits or components has a specified interval of 18 months. At nuclear generating stations, such tests on station battery banks and associated chargers incur unacceptable risk if performed with the unit on line and a unit outage is required for this testing. A number of nuclear plants are on two-year shutdown cycles and we request that the 18 month intervals be changed to two (2) (calendar) year intervals to accommodate this. 5. Protection System Control Circuitry (Breaker Trip Coil Only) (Except for UFLS or UVLS) Based on past performance, a complete functional test trip every 6 years is not warranted. This complete functional test introduces additional risk to our maintenance program, not only from a human error perspective, but also from the additional frequency of switching and outages required. Our experience has shown that 12 years is an appropriate maximum time interval (rather than 6 years.)
Response: The SDT thanks you for your comments.		

Organization	Yes or No	Question 3 Comment
1. The SDT believes that such maintenance of the communications will primarily be performed by inspection monitoring lamps and so forth. The trip coil requirements to which you refer have been removed. **2. This activity is primarily inspection-based, involving no invasive testing. The stated intervals seem appropriate.** **3. The SDT considered this issue when developing the intervals, and realizes that some entities may need to perform certain maintenance activities more frequently to assure that the activities are performed within the required intervals. Specifically, for generation facilities, there would seem to be numerous opportunities within the 6-year or longer intervals to perform the required maintenance during a scheduled plant outage, and maintenance with shorter intervals can be characterized as non-intrusive maintenance, more of an inspection than anything else; the SDT believes that this maintenance can be done on-line. The SDT is concerned that a "grace period", if permitted, would be used to establish a de-facto longer interval, and that the established intervals would thus not be measurable. Additionally, FERC Order 693 directed that NERC establish maximum maintenance intervals, and allowing for a "grace period" would not conform to this directive. Please refer to Section 8 (page 9) of the Supplementary Reference Document for a discussion on this issue.** **4. All Maintenance Activities listed in Tables 1a, 1b, and 1c related to the station dc supply that have a Maximum Maintenance Interval shorter than two (2) (calendar) years are necessary inspection, checking or verification activities routinely performed on the station dc supply with it in service and without posing an unacceptable risk. The Drafting team feels that to extend these activities beyond their Maximum Maintenance Intervals listed in Table 1 would jeopardize the station dc supply.** **5. The SDT believes that the 6-year interval for this activity is appropriate. If you experience supports a longer interval, the standard permits you to utilize Performance-Based maintenance.**		
AEP	No	The availability to perform maintenance of many protection systems is dictated by the load or customer that is connected. Many of these industrial customers, who are outside the jurisdiction of NERC requirements, operate 24X7 and see the outages required for maintenance as a nuisance and a loss of revenue. How can the owner be held non-compliant for not meeting the intervals when they may not control the timing? Comments expanded in question 10 responses.
Response: The SDT thanks you for your comments. This non-compliance would be addressed via contract law; these contracts are described in the Statement of Compliance Registry.		
US Bureau of Reclamation	No	The definition of Protection System components does not add clarity. The standard proposes including stations service transformers for generation facilities, however, the protection system definition does not include those elements. The inclusion of station service transformers would only be appropriate if the protection associated with the transformer results in the tripping of a transmission element.
Response: The SDT thanks you for your comments. The applicability to station service transformers emphasizes the impact of those components on the operability of the associated generator. They are not themselves Protection System components; however, maintenance of the Protection System		

Organization	Yes or No	Question 3 Comment
components on those system elements is required per the Standard. See FAQ III-2-A (page 20).		
Ohio Valley Electric Corp.	No	The documentation requirements for the inspection activities with three month intervals are oppressive and should not be a part of the protection system maintenance standard.
Response: The SDT thanks you for your comments. The SDT disagrees; it is left to the entity to adopt effective methods to document these activities.		
CPS Energy	No	1. The first problem that I have is the 3 Months for the Protection system communications equipment and channels component. My main concern with this interval is that it is so extremely short and I am concerned that there may not be any rational behind it. What studies, surveys, or statistical data were used to determine that 3 months is necessary to protect the reliability of the BES? It doesn't make sense that a communications signal needs to be checked every 3 months but the protective relay that utilizes that scheme needs to be checked at most only every 6 years. 2. What concerns me the most with the 3 month interval for my company is with on-off power line carrier DCB schemes? We only have these schemes on tie lines, and it can be difficult to implement a checkback system with another utility who might utilize different carrier equipment. This type of scheme is also intended to be inherently insecure and is frequently more or less tested with faults in the system. The SPCTF should do surveys to determine what is presently done with these type of systems or provide some other rationale for the communication requirements. It is not totally clear from the documents, but it appears that the only way to avoid the 3 month check for an on-off power-line carried DCB scheme is to have an automated check back scheme. Is this correct? Or is alarming from the carrier equipment adequate? 3. My second problem is with the 6 year maximum maintenance interval for the breaker trip coil in tables 1b and 1c. By having to verify that each breaker trip coil is electrically operated, you might as well perform a functional test to test the protection system control circuitry. Electrically operating the trip coil tests the breaker as much as it test the actual trip coil. Also, if you have a primary and secondary trip coil, is it really necessary to test this often? What studies or statistical data were used to determine that testing the breaker trip coils every 6 years is necessary to protect the reliability of the BES? 4. My third problem is with the intervals requirements for the UVLS/UFLS systems. Other than testing and calibration of electromechanical UVLS/UFLS, most other tests probably should require at most 10 years for these types of systems. These systems don't require the performance level of most other systems as stated in the supplementary reference. The testing and calibration of electromechanical UFLS should possibly be even shorter than the 6 year requirement due to problems with drift with these type of relays. What studies, surveys, or statistical data were used to determine the intervals in related to UFLS/UVLS.?
Response: The SDT thanks you for your comments.		

Organization	Yes or No	Question 3 Comment
1. The 3 month intervals are for unmonitored equipment and are based on experience of the relaying industry represented by the SDT, the SPCTF and review of IEEE PSRC work. Relay communications using power line carrier or leased audio tone circuits are prone to channel failures and are proven to be less reliable than protective relays. **2. The automated check back systems are common ways to verify the integrity of the relay communication channel. It would only be moved to Level 2 if the check back test is monitored remotely and the tests are run daily. Without check back equipment, it will be necessary to have personnel at both ends and manually initiate a signal and verify that the remote equipment operates.** **3. In the experience of the SDT and the NERC SPCTF, the 6-year interval is appropriate. The SPCTF also conducted an informal survey of entities representing approximately 2/3 of the NERC net-energy-for-load and a review of IEEE surveys to validate these intervals. See the Supplementary Reference Document, Section 8 (page 9).** **4. In the experience of the SDT and the NERC SPCTF, the 6-year interval is appropriate. The SPCTF also conducted an informal survey of entities representing approximately 2/3 of the NERC net-energy-for-load and a review of IEEE surveys to validate these intervals. See the Supplementary Reference Document, Section 8 (page 9). The maintenance of the other Protection System components associated with UFLS/UVLS is specifically stated to correspond with the intervals for the relays themselves.**		
Consumers Energy Company	No	1. The interval for Protection System Control Circuitry (breakers trip coil) should be set at 12 years since this is a scheme test. This test requires testing of the circuit and not just the coil. 2. The interval for Protection System Control Circuitry (trip circuit) should be set at 12 years since this is a scheme test. The Protection System Control Circuitry (trip circuit) test would require tripping off customers on radial distribution circuits which is not acceptable. 3. The interval for a station battery service test (lead acid) should be set at 5 years based on NFPA 70B.
Response: The SDT thanks you for your comments. **1. The SDT believes that the intervals indicated in the standard are appropriate. The standard allows the use of Performance-Based maintenance if your experience supports it.** **2. The SDT believes that the intervals indicated in the standard are appropriate. The standard allows the use of Performance-Based maintenance if your experience supports it. The standard applies only to Protection Systems on BES components as established by your regional BES definition.** **3. NFPA 70B is a recommended practice which is voluntary, and is not a standard that establishes any requirements that must be measurable. NERC standard PRC-005 requirements are loosely aligned with some of the NFPA standards. However, the Maximum Maintenance Intervals required in PRC-005-2 were established to be measurable and enforceable. If an owner chooses to perform the Maintenance Activities outlined in Table 1 of the standard at a lesser interval the owner is free to do so.**		
RRI Energy	No	1. The intervals need to be defined on a calendar quarters or calendar years, especially for intervals listed as 3 months. The demonstration of maintenance on rolling three-month intervals will be an onerous record

Organization	Yes or No	Question 3 Comment
		keeping task, particularly when relying upon planning and tracking software that scheduled recurring tasks on the same day of an interval. 2. Given the magnitude of the number of trip circuits, the requirements set an un-acceptable trap of non-compliance from a record keeping perspective. The resources required to keep and maintain flawless records are too much to justify the intervals. A non-compliance is the result if the breakers that happen to be in an open state when the officially "documented" inspection is recorded and is missed by accidental oversight on follow-up. If the requirement remains, it should be waived for any breaker that is operated during the defined interval.
Response: The SDT thanks you for your comments. **1. The SDT believes that the "3 Calendar Month" interval is necessary to maintain the periodicity of the maintenance activities. "Once per calendar quarter" or "four times per year" would allow up to a 6-month practical interval, which would not maintain this periodicity. This DOES permit entities to use four inspections per year provided that they carefully manage their maintenance activities.** **2. The dc control circuit maintenance to which you refer has been removed from the standards. The SDT disagrees that the record keeping is excessively burdensome; it is left to the entity to adopt effective methods to document these activities.**		
Progress Energy	No	The rational for microprocessor-based relay intervals is examined, but all others are strictly based on industry weighted average of survey results. We believe the team should use a more empirical, documented approach to determining these intervals, as many companies have longer intervals that they currently have documented for their basis. If these have been accepted as satisfactory in previous audits, why should they be required to change just to meet an arbitrary number?
Response: The SDT thanks you for your comments. The standard permits entities to use Performance-based maintenance if they have documented experience which supports doing so.		
Northeast Power Coordinating Council	No	1. We question whether any maintenance activity should be as long as 12 years. Considering the rate of change in personnel and technology, the working group should reduce the time period by redefining the requirement if necessary, or eliminate the standard requirement. 2. In addition, the DC components have too many tests at confusing intervals. Confusion will make it difficult to implement or follow the exact method used.
Response: The SDT thanks you for your comments. **1. In the experience of the SDT and the NERC SPCTF, the intervals within the standard are appropriate. The SPCTF also conducted an informal survey of entities representing approximately 2/3 of the NERC net-energy-for-load and a review of IEEE surveys to validate these intervals. (See**		

Organization	Yes or No	Question 3 Comment
Supplementary Reference Document, Section 8.4, page 13) **2. The SDT has modified the standard in consideration of your comments and simplified the maintenance activities associated with dc supplies.**		
Detroit Edison	No	What is the basis for the three month interval for verifying breaker trip coil continuity? Will the investment required to facilitate this really result in the presumed expected increased reliability?
Response: The SDT thanks you for your comments and has removed the requirement.		
Manitoba Hydro	No	1. When we have redundant digital relay system that would fall under Level 1c category with a 12 year maintenance cycle, but the Protection System Control Circuitry is non-monitored so it falls under Level 1a, with a 6 year maintenance cycle. We will have to complete relay maintenance and trip testing every 12 years and trip testing only every 6 years, therefore we must complete trip testing twice as often as we are doing the maintenance. We feel that relay maintenance and trip testing should be completed at the same frequency. 2. The Protection System Control Circuitry (Breaker Trip Coil) checks every three months is too excessive. These circuits are checked during trip testing of the Protection scheme, at the 6 or 12 year interval. 3. If we have a redundant digital relay system, using a IEC61850 communication from the relay to a common breaker aux trip relay, what level does this system fall under?
Response: The SDT thanks you for your comments. **1. Whether relay systems are redundant are immaterial in determining appropriate maintenance intervals. The SDT believes that the intervals established in the standard are appropriate. The Tables have been revised extensively; the SDT invites you to review the revised Tables to determine how they affect your system.** **2. The requirement to which you refer has been removed from the Table.** **3. Whether relay systems are redundant are immaterial in determining appropriate maintenance intervals. You will need to evaluate all components to determine applicable maintenance activities; the digital relays MAY fall under Table 1c, but other components may fall under any of the Tables.**		
Xcel Energy	No	Within the tables, several components related to UFLS/UVLS systems have an interval of “when the associated UVLS or UFLS system is maintained.” Yet, there is no maximum interval established for a UVLS or UFLS system. We feel this item should be clarified. If the intent of the SDT is to tie the testing to when the UFLS/UVLS relays are maintained, so that all components are tested at the same time, then this should be made clear. One possible resolution would be to change the interval to read: “when the associated UVLS/UFLS relays are maintained”.

Organization	Yes or No	Question 3 Comment
Response: The SDT thanks you for your comments. The interval for the UVLS or UFLS system relays is established within Table 1a, Table 1b, and Table 1c. The intent of the SDT is to facilitate concurrent maintenance of all components associated with these systems at a common location.		
AECI	No	1. Comments: Table 1a 3 months for protection system coil check out seems extreme. Should be at least 1 year. 2. Same as comment 4 for the communication checkout on page 9.
Response: The SDT thanks you for your comments. **1. The SDT has modified the standard to remove the requirement to which you refer.** **2. See response to your question 4 comment on communication checkout.**		
Puget Sound Energy	Yes	PSE appreciates the explanation of calendar provided in the supplementary reference on page 14. Further clarity would be gained by an example that is not at the end of a calendar year. For example if a relay was maintained June 15, 2008, would it be due for maintenance again no later than June 30, 2014 or December 31, 2014.
Response: The SDT thanks you for your comments. For your example, the maintenance would have to be completed within 2014.		
Bonneville Power Administration	Yes	
ENOSERV	Yes	
Georgia System Operations Corporation	Yes	
Lower Colorado River Authority	Yes	
Oncor Electric Delivery	Yes	
Ontario Power Generation	Yes	
Operations and Maintenance	Yes	

Organization	Yes or No	Question 3 Comment
Otter Tail Power	Yes	
Saskatchewan Power Corporation	Yes	
TVA	Yes	
Western Area Power Administration	Yes	

4. Within Tables 1b and 1c, the draft standard establishes parameters for condition-based maintenance, where the condition of the devices is known by means of monitoring within the substation or plant and the condition is reported. Do you agree with this approach? If not, please explain in the comment area.

Summary Consideration: Most respondents agreed with the general approach regarding condition-based maintenance, many of them with questions and/or comments. Many of the comments requested clarification of any of a variety of specific provisions within Tables 1b and 1c, and revisions were made to the Tables to present the information more clearly. The activities for control circuits and for dc supply were considerably re-worked.

Organization	Yes or No	Question 4 Comment
Green Country Energy LLC		No Preference at this time.
Exelon Generation Company, LLC	No	1. Please provide more clarification on what constitutes "partially monitoring." For example, is a computer auxiliary contact alarm count as partial monitoring? Would a common alarm between relays meet the definition of partial monitoring? 2. All maintenance activities should include a "grace" period to allow for changes to a nuclear generator's refueling schedule and emergent conditions that would prevent the safe isolation of equipment and/or testing of function. "Grace" periods align with currently implemented nuclear generator's maintenance and testing programs. 3. Table 1b Station dc supply (that has as a component valve regulated lead-acid batteries) should provide an additional optional activity for "Total replacement of battery at an interval of four (4) years. 4. There seems to be a disconnect between the monitoring attribute and maintenance activity. For example, the monitoring attribute "Monitoring and alarming of the station dc supply voltage/detection and alarming of dc grounds" has the maintenance activity "verify that the station battery can perform as designed by conducting a performance or service capacity test of the entire batter bank. (3 calendar years) or " Verify that the station battery can perform as designed by evaluating the measure cell/unit internal ohmic values to station battery baseline (3 months)." The maintenance activity does not support the monitoring attribute. 5. If an entity has implemented Table 1b and/ or Table 1c, is there an acceptable length of time that the monitoring equipment can be out of service without falling back to Table 1a requirements?
Response: The SDT thanks you for your comments.		

Organization	Yes or No	Question 4 Comment
1. A common alarm would meet the definition of partially monitored. See FAQ V-3-A (page 38). **2. The SDT considered this issue when developing the intervals, and realizes that some entities may need to perform certain maintenance activities more frequently to assure that the activities are performed within the required intervals. Specifically, for generation facilities, there would seem to be numerous opportunities within the 6-year or longer intervals to perform the required maintenance during a scheduled plant outage, and maintenance with shorter intervals can be characterized as non-intrusive maintenance, more of an inspection than anything else; the SDT believes that this maintenance can be done on-line. The SDT is concerned that a "grace period", if permitted, would be used to establish a de-facto longer interval, and that the established intervals would thus not be measurable. Additionally, FERC Order 693 directed that NERC establish maximum maintenance intervals, and allowing for a "grace period" would not conform to this directive. Please refer to Section 8 of the Supplementary Reference Document (page 9) for a discussion on this issue.** **3. The SDT believes that total replacement of a VRLA battery set at an interval of four (4) years in lieu of not conducting a capacity test at the maximum maintenance interval of 3 calendar years, or evaluating the measured cell/unit internal ohmic values to the station battery's baseline at the maximum maintenance interval of 3 months would put the owner of the battery set out of compliance with the standard. The SDT believes the three calendar year Maximum Maintenance Interval for conducting a capacity test (listed in Table 1) cannot be exceeded. If an owner does a total replacement of the battery within a three calendar year interval from initial installation of a VRLA battery set, the owner will be compliant with the standard. Extending the time that a VRLA goes beyond the Maximum Maintenance Interval in Table 1 without verification that it can perform as designed is not adequate to insure that the station battery will perform reliably.** **4. The monitoring attributes describe "what you know of the component via the monitoring", while the activities describe what must be done relative to the "things you don't know". Therefore, it's expected that the attributes and activities will be dissimilar.** **5. The equipment used to monitor the alarms must be returned to service within the shortest Table 1a interval of the monitored components. For example, if monitoring is used to defer the 3-month Table 1a maintenance activity related to Protection System Control Circuitry, the monitoring function must be returned to service within 3 months. This has been added to Table 1b and Table 1c as a requirement.**		
American Transmission Company	No	1. ATC does not believe that there is a relay, on the market today, that has the ability to fully monitor itself as described in Table 1c. We believe that Table 1c should be deleted. (Table 1b could cover any device that has the ability to fully monitor if such a device is developed in the future.) ATC does not believe that NERC Reliability Standards should be used as an enticement for manufacturers to develop specific devices. 2. Under the "General Description" in Table 1c, there is a reporting requirement identifying a 1 hour window. ("must be reported within 1 hour or less of the maintenance-correctable issue occurring, to the location where action can be taken.") ATC believes that the team needs to define if this action is a phone call or physically verify the maintenance correctable issue which is occurring.
Response: The SDT thanks you for your comments. **1. Your observation may be accurate at the present time and is not limited to protective relays. The standard was developed with future improvements**		

Organization	Yes or No	Question 4 Comment
in technology and practices in mind. **2. This reporting requirement is intended to be by whatever means is available, to a location where resolution of the maintenance-correctable issue can be initiated.**		
Duke Energy	No	For utilities like us with large numbers of relays it's too complicated, which drives us back to Table 1a.
Response: The SDT thanks you for your comments. The standard was written with enough flexibility to allow entities to make the best business decision for their situation. Some entities may decide that Table 1a is the best fit for their situation.		
AEP	No	How would the failure of a SCADA system affect the ability to take advantage of monitoring?
Response: The SDT thanks you for your comments. **It doesn't, as long as the SCADA system is returned to service within the shortest Table 1a interval of the monitored components. For example, if monitoring is used to defer the 3 month Table 1a maintenance activity related to Protection System Control Circuitry, the monitoring function must be returned to service within 3 months. This has been added to Table 1b and Table 1c as a required attribute for the associated type of protection system component.**		
Illinois Municipal Electric Agency	No	IMEA supports comments submitted by Florida Municipal Power Agency regarding use of the word "every" in Table 1c.
Response: The SDT thanks you for your comments. See response to FMPA.		
Pepco Holdings Inc.	No	Monitoring and alarming of the station dc supply and detection and alarming of dc grounds are required to qualify for Level 2 monitoring of battery / dc systems. While the presence of dc ground may affect protection and control operations, they do not affect any of the systems for which dc ground alarming is listed as a monitoring criteria. Recommend removing this criterion from the battery & dc system monitoring criteria and adding it as a maintenance activity, with frequency of testing based on presence of detection / alarming.
Response: The SDT thanks you for your comments. The dc ground alarm may identify a maintenance correctable issue, which must be resolved according to Requirement R4. The SDT believes that dc ground detection is usually a part of battery maintenance; this is sometimes even included in the battery charger.		
Electric Market Policy	No	Recommend that all Level 2 three-month maintenance intervals be changed to a quarterly based system where only 4 inspections are required per year. Given a 3 month maximum interval, activities would need to be scheduled every 2 months, which would result in six inspections per year. Our experience of four

Organization	Yes or No	Question 4 Comment
		inspections per year has proven to be successful.
Response: Thank you for your comments .SDT believes that the "3 Calendar Month" interval is necessary to maintain the periodicity of the maintenance activities. "Once per calendar quarter" or "four times per year" would allow up to a 6-month practical interval, which would not maintain this periodicity. This DOES permit entities to use four inspections per year provided that they carefully manage their maintenance activities.		
SERC (PCS)	No	Recommend that all Level 2 three-month maintenance intervals be changed from 3 months to quarterly. Given a 3 month maximum interval an entity would need to schedule these tasks every 2 months. This would result in six inspections per year. In the experience of many of our utilities, four inspections per year have proven to be successful.
Response: The SDT thanks you for your comments. SDT believes that the "3 Calendar Month" interval is necessary to maintain the periodicity of the maintenance activities. "Once per calendar quarter" or "four times per year" would allow up to a 6-month practical interval, which would not maintain this periodicity. This DOES permit entities to use four inspections per year provided that they carefully manage their maintenance activities.		
Wolverine Power Supply Cooperative, Inc.	No	See question 2 response
Response: The SDT thanks you for your comments. See Question 2 response.		
SCE&G	No	Several maximum maintenance intervals are 3 months. Since this is an absolute maximum period, entities would need to schedule on a 2 month basis to assure the 3 month maximum is met, i.e., 6 times per year. We recommend that 3 month periods be increased to 4 months which allows scheduling every 3 months. An alternate method of achieving the same result is to state periodic requirements of quarterly or 4 times per year.
Response: The SDT thanks you for your comments. SDT believes that the "3 Calendar Month" interval is necessary to maintain the periodicity of the maintenance activities. "Once per calendar quarter" or "four times per year" would allow up to a 6-month practical interval, which would not maintain this periodicity. This DOES permit entities to use four inspections per year provided that they carefully manage their maintenance activities.		
Detroit Edison	No	Table 1b indicates that this (level 2) includes all elements of level 1 monitoring. However, level 1 is constantly referred to as unmonitored in other places.
Response: The SDT thanks you for your comments and modified Table 1b to address your comment by removing this reference from the header of the table.		

Organization	Yes or No	Question 4 Comment
Southern Company	No	1. Table 1b should allow self-monitored circuits that are not alarmed but are monitored and logged by personnel daily or more often. Many plants and substations have personnel that do in person checks of unmanned control rooms. This is the equivalent of "Protection System components whose alarms are automatically provided daily (or more frequently) to a location where action can be taken for alarmed failures." For example, dc system ground potential lights and dc system volt meters exist on most control room bench boards or exist in the digital control systems at generating stations. These devices are monitored by operators in manned control rooms. 2. On Table 1b, Protection System Control Circuitry (Trip Coils and Auxiliary Relays), the monitoring component calls for "Monitoring and alarming of continuity of trip coil(s)." Clarify that "trip coil(s)" excludes Breaker Failure Initiate relay coil(s). 3. On Table 1b, Protection System Control Circuitry (Trip Coils and Auxiliary Relays) Experience has shown that electrically operating fully monitored breaker trip coils, auxiliary relays, and lockout relays every 6 years is not warranted. This testing introduces risk from a human error perspective as well as from additional switching and clearances required. We recommend eliminating this maintenance requirement from Table 1b. 4. On Table 1c, Protection System Control Circuitry (Trip Coils and Auxiliary Relays) Experience has shown that electrically operating fully monitored breaker trip coils, auxiliary relays, and lockout relays every 6 years is not warranted. This testing introduces risk from a human error perspective as well as from additional switching and clearances required. We recommend changing this maximum maintenance interval to 12 years. 5. Component monitoring attributes need to be defined for all components in table 1b and 1c. For example, the attributes for voltage and current sensing devices could be that "Voltage and current input circuits are monitored and alarmed". 6. Based on past performance, the requirement to electrically operate trip coils, auxiliary relays, and lockout relays every 6 years in Table 1b is not warranted. We recommend complete functional testing including electrical operation of breaker trip coils, auxiliary trip relays, and lockout relays every 12 years in tables 1b and 1c.
Response: Thank you for your response. **1. The SDT modified the Table 1b header to address your comment by adding "condition or" to the General Description. See FAQ V-1-D (page 30).** **2. The SDT has modified the standard to clarify that this monitoring addresses monitoring of the trip circuit(s), rather than the trip coil(s).** **3. The SDT believes that it is important that these mechanical devices be periodically (physically) exercised to assure that they will operate properly.**		

Organization	Yes or No	Question 4 Comment
4. The SDT believes that the intervals in the table are appropriate. The standard allows entities to utilize Performance-Based maintenance if they have appropriate documented experience. **5. The tables have been modified to address this issue, except where no relevant monitoring attributes exist.** **6. The SDT believes that the intervals in the table are appropriate. The standard allows entities to utilize Performance-Based maintenance if they have appropriate documented experience.**		
US Bureau of Reclamation	No	The condition based monitoring only provides for a very narrow process and excludes sound judgment in determining maintenance intervals. As long as the registered entity establishes parameters by which variation in the prescribed maintenance intervals are determined, justified variation should be allowed.
Response: The SDT thanks you for your comments. The SDT, in accordance with FERC Order 693, has prescribed maximum allowable maintenance intervals for unmonitored Protection System components (Table 1a), partially-monitored Protection System components (Table 1b), and fully-monitored Protection System components (Table 1c). For further discussion pertaining to intervals see Supplementary Reference Document, Section 8 (page 9). To allow an entity to use their discretion to extend these intervals, absent adoption of the criteria established for performance-based maintenance, would be contrary to the direction established by FERC. For further discussion pertaining to performance based maintenance see Supplementary Reference Section 9.		
Austin Energy	Yes	
Bonneville Power Administration	Yes	
CPS Energy	Yes	
Dynegy	Yes	
E.ON U.S.	Yes	
ENOSERV	Yes	
Entergy Services, Inc	Yes	
FirstEnergy	Yes	
Georgia System Operations	Yes	

Organization	Yes or No	Question 4 Comment
Corporation		
Indianapolis Power & Light Co.	Yes	
Manitoba Hydro	Yes	
Nebraska Public Power District	Yes	
NextEra Energy Resources	Yes	
Northeast Power Coordinating Council	Yes	
Oncor Electric Delivery	Yes	
Ontario Power Generation	Yes	
Operations and Maintenance	Yes	
Otter Tail Power	Yes	
PacifiCorp	Yes	
Platte River Power Authority Maintenance Group	Yes	
RRI Energy	Yes	
Saskatchewan Power Corporation	Yes	
Transmission Owner	Yes	
TVA	Yes	

Organization	Yes or No	Question 4 Comment
Western Area Power Administration	Yes	
Wisconsin Electric	Yes	
Xcel Energy	Yes	
MRO NERC Standards Review Subcommittee	Yes	A. The MRO NSRS agrees with this approach; however, I think most entities will not see the advantage of condition-based maintenance until they can resolve any gaps in data retention. If an entity was retaining a set of maintenance records but failed to include all the needed information as specified in this standard so they would need to adjust their maintenance procedure to collect all information and then they would need to wait for the entire retention period until they could start using the extended maintenance interval. If an entity had a collateral set of records which verified the information that lacked in the original maintenance record then could the entity start using the extended maintenance interval? For example, an entity has records showing that they have maintained a voltage or current transformer within the prescribed maintenance interval listed in level 1 monitoring (which is a maximum 12 year maintenance interval). Could this same entity go to level 3 monitoring (which is a continuous maintenance interval) immediately if it can query their SCADA and produce detailed records indicating the accuracy of the PT or CT for the maintenance records already retained? B. For lockout relays, if commissioning tests are done diligently, the trip DC availability is continuously monitored and the trip coil itself is continuously monitored, is it necessary to operate these relays for functional testing? For breaker failure lockout relays, re-verifying the operation of the coil and all the contacts could mean taking multiple breakers and line terminals out of service at the same time. Functional trip tests could cause unintentional tripping of equipment, cause equipment damage and interruption of service to customers. It's hard to see how the reliability of the BES is significantly improved by doing this test. The MRO NSRS feels the risk of adverse impact could be greatly reduced by a longer interval such as 12 years. C. In table 1c, the word “continuous or continuously monitored” is used. Please clarify the “within 1 hour” time frame takes into account that there may be a communication outage (failover) that will prevent an entity to “continuously” monitor a device.
Response: The SDT thanks you for your comments. **A. It appears to the SDT that this comment actually is addressing performance-based maintenance, rather than condition-based maintenance. If the entity has all the necessary records to support immediate moving to a specific level of maintenance, or to performance-based maintenance, there should be no barrier to such an action.** **B. The SDT is not aware of any monitoring system that can verify that these mechanical devices can indeed physically operate properly; thus the**		

Organization	Yes or No	Question 4 Comment
interval is established at 6 years. (See Supplementary Reference Document Section 15.4, page 23.) **C. "Continuous monitoring" is an attribute of the Protection System component to produce an indication of state or status; the 1-hour constraint refers to the communication method used to monitor the indications. The equipment used to monitor the alarms must be returned to service within the shortest Table 1a interval of the monitored components. For example, if monitoring is used to defer the 3 month Table 1a maintenance activity related to Protection System Control Circuitry, the monitoring function must be returned to service within 3 months. This has been added to Table 1b and Table 1c as a required attribute for the associated type of protection system component.**		
City Utilities of Springfield, MO	Yes	CU agrees with the approach, but, may not agree with the exact wording in the tables. For instance, the use of the word "every" in table 1c in "Protection System components in which every function required for correct operation of that component is continuously monitored and verified" may be overstating the level of monitoring that would realistically enable a Protection System to use table 1c.
Response: The SDT thanks you for your comments. Table 1c establishes that, with the monitoring attributes specified, periodic maintenance may not be necessary at all. In order to facilitate this, the constraint, "every function required for correct operation of that component is continuously monitored and verified" must be met. If a component cannot meet this constraint, it must be addressed within either Table 1b or Table 1a, as appropriate.		
Florida Municipal Power Agency, and its Member Cities	Yes	FMPA agrees with the approach, but, may not agree with the exact wording in the tables. For instance, the use of the word "every" in table 1c in "Protection System components in which every function required for correct operation of that component is continuously monitored and verified" may be overstating the level of monitoring that would realistically enable a Protection System to use table 1c.
Response: The SDT thanks you for your comments. Table 1c establishes that, with the monitoring attributes specified, periodic maintenance may not be necessary at all. In order to facilitate this, the constraint, "every function required for correct operation of that component is continuously monitored and verified" must be met. If a component cannot meet this constraint, it must be addressed within either Table 1b or Table 1a, as appropriate.		
JEA	Yes	Is it possible that for coil monitored equipment, such as LOR coils, that they were left out, of this Table allowing for a longer maintenance interval. Certainly LOR continuous coil monitoring with alarming to a 24 hour 7 day a week manned location, with emergency dispatch, would allow for a longer maintenance interval for continuously monitored LORs. Suggestion here might be alignment with continuously self-tested, monitored and alarmed microprocessor relays at 12 years.
Response: The SDT thanks you for your comments. Monitoring of the coil of these devices does not assure that the device will mechanically operate properly; thus the interval for verification of proper physical operation is established at 6 years similarly to Table 1a and Table 1b. (See Supplementary		

Organization	Yes or No	Question 4 Comment
Reference Document, Section 15.4, page 23.)		
ITC Holdings	Yes	We agree with the approach. We have several issues with the details of Maintenance Issues, Interval and Monitoring Attributes. See previous comments for Questions 2 and 3.
Response: The SDT thanks you for your comments. See response to your comments in Questions 2 and 3.		
Ameren	Yes	We agree with the condition-based approach. Our comments in 3 above apply to Tables 1b and 1c as well. We note that Table 1b Station dc supply intervals are the same as Table 1a. Why doesn't the monitoring cause 1b intervals to be longer than 1a?
Response: The SDT thanks you for your comments. The standard (specifically Table 1b) has been modified in consideration of your comment.		
Lower Colorado River Authority	Yes	We commend the drafting team for recognizing the advantages of using monitored systems and a condition-based approach. This approach recognizes the benefits of using newer technologies and will give utilities added incentive to update their relay systems.
Response: The SDT thanks you for your support.		
Puget Sound Energy	Yes	

5. Within PRC-005 Attachment A, the draft standard establishes parameters for performance-based maintenance, where the historical performance of the devices is known and analyzed to support adjustment of the maximum intervals. Do you agree with this approach? If not, please explain in the comment area.

Summary Consideration: Many of the respondents agreed with this approach, but comments indicated concern about perceived administrative difficulties in establishing performance-based maintenance programs. The SDT responded to these concerns by noting that associated administrative program development is one of the considerations that an entity must address when contemplating use of such a program.

Organization	Yes or No	Question 5 Comment
Green Country Energy LLC		N/A does not apply
MRO NERC Standards Review Subcommittee	No	A. The MRO NSRS is concerned that this approach could lead to non-compliance if the company follows this process and a Compliance Auditor disagrees with the method that was used. An applicable entity should be protected if they follow the standard appropriately. There should be some assurance of a grace period for mitigation if this selected approach was not accepted. B. Please provide the basis for having at least 60, then taking 30 (50%) for testing/maintenance. This may give an unfair advantage to larger companies rather than being fair across the board. This places an undue burden on smaller companies by having to team up with other asset owners.
Response: The SDT thanks you for your comments. **A. See Attachment A of standard. The entity has three years to get performance to an acceptable level (under 4% countable events) or get on the appropriate time-based interval.** **B. The requirement for having 60 and testing 30 is based on having a statistically significant number of devices. Please see Section 9.1 (page 16) of the Supplementary Reference Document for a discussion of the statistical basis. The standard allows smaller entities to share data in order to support their ability to utilize performance-based maintenance.**		
CenterPoint Energy	No	a. CenterPoint Energy lauds the SDT for recognizing that strict imposition of the maximum interval approach creates problems which the SDT attempts to correct by allowing performance-based adjustments. CenterPoint Energy believes the majority of industry commenters will agree with CenterPoint Energy's assessment that the maximum interval approach is problematic and should be dropped from the proposal. However, if the majority of industry commenters agree with the SDT's approach, then a performance-based option to correct the problems introduced by the maximum interval requirements should remain.

Organization	Yes or No	Question 5 Comment
		b. CenterPoint Energy answered "No" to question 5 because CenterPoint Energy believes the arduous path of creating a new set of problems with a rigid approach (maximum interval requirements) and then introducing a complex set of auditable requirements to provide an option (performance-based maintenance) to mitigate the harm of the rigid approach is ill-advised and fraught with pitfalls. Stated otherwise, using performance-based adjustments to correct inappropriate maximum intervals would not be necessary if the inappropriate maximum intervals were not imposed. CenterPoint Energy believes a better approach is to avoid introducing the new set of problems that then have to be mitigated by not imposing problematic maximum intervals. c. Followed to its logical conclusion, using performance-based adjustments to correct inappropriate maximum intervals is a contorted way of arriving at the philosophy embodied in the current set of standards in which entities determine the maximum intervals appropriate for their circumstances and performance. CenterPoint Energy's concern is that the contortions needed to arrive at the same point, in addition to being unnecessary, will be difficult for most entities to navigate. An entity making a good faith effort to comply with the performance-based adjustments will have to navigate through the complexities and nuances of the approach, as illustrated by the extensive set of documents the SDT has provided in an attempt to explain all the requirements and nuances. As an entity attempts to manage this hurdle, the entity will likely have to deal with the reality that the granularity of performance metrics do not exist in most cases to justify to an auditor the rationale for the adjustments to the inappropriate maximum intervals. For example, CenterPoint Energy has asserted that it has had good battery performance using existing practices. However, the assertion is anecdotal. CenterPoint Energy cannot recall any instances where it had a relay misoperation due to battery failure in over twenty five years. CenterPoint Energy does not attempt to keep performance metrics on events that historically occur less than four times a century and CenterPoint Energy believes most entities will be in the same situation. d. If an entity is somehow able to overcome these hurdles, the entity will almost certainly encounter skepticism for what will be viewed as an exception to the default requirement embodied in the standard. Even if an entity can overcome likely skepticism in an audit, the entity will be in a severely disadvantaged situation if a protection system component for which the maintenance interval has been adjusted, based on the entity's good faith effort and reasoned judgment, nevertheless is a contributing factor in a major reliability event investigation, regardless of whether the maintenance interval adjustment contributed to the failure. No matter what maintenance intervals are used, protection system components could fail. If the maintenance interval has been adjusted and if failure occurs, it will likely be unknown whether the interval adjustment was in fact a contributing factor or whether the failure would have occurred anyway. e. Faced with this dilemma, in addition to all the other hurdles to overcome in attempting to adjust an inappropriate maximum interval, the reality is that most entities will accept the inappropriate maximum interval and over-maintain their protection system components, and introduce a new set of reliability risks from such over-maintenance. For these reasons, CenterPoint Energy advises against creating a new set of problem by imposing rigid maximum intervals and then attempting to correct the problems through a performance-based

Organization	Yes or No	Question 5 Comment
		mechanism that in actual practice would likely be illusory.
Response: The SDT thanks you for your comments. **a. FERC order 693 requires that NERC establish maximum time intervals. The criteria for performance-based maintenance are established for entities that wish to establish other intervals based on concise stated criteria.** **b. FERC order 693 requires that NERC establish maximum time intervals. The SDT believes that the established intervals are appropriate. The criteria for performance-based maintenance are established for entities that wish to establish other intervals based on concise stated criteria.** **c. Entities are not required to use PBM, but instead may elect to simply use the intervals established in Table 1a, Table 1b, and/or Table 1c. However, if an entity keeps the necessary metrics to conform to Attachment 1, it may find opportunities within PBM; however, the SDT has established that maintenance of station batteries must be performed within a time-based maintenance program.** **d. The standard established maximum intervals, minimum maintenance activities, and, for PBM, minimum requirements (and performance). If an entity is concerned about whether these intervals will yield acceptable performance, it may perform more maintenance, more frequently, than established within the standard.** **e. FERC order 693 requires that NERC establish maximum time intervals. The criteria for performance-based maintenance are established for entities that wish to establish other intervals based on concise stated criteria, but entities are not required to use PBM.**		
ITC Holdings	No	Appendix A fixes a 4% level of "countable events". Is this number the industry average for countable events? Has the industry average actually been determined? The basis for the 4% requirement noted in Paragraph 5 of Appendix A should be included in the reference document. Also a sample calculation for adjusting the interval is needed to clarify the requirement.
Response: The SDT thanks you for your comments. We used failure and calibration data from some of the utilities on the drafting team to determine the 4% level; this value is also determined such that a single countable event on the 30 unit minimum test sample established via the statistical analysis described in Section 9 of the Supplementary Reference Document (page 15) does not exceed the threshold. See FAQ IV-3-D thru IV-3-F (pages 25-26) which discusses types of Misoperations and correcting segment performance.		
American Transmission Company	No	ATC agrees with this approach but is concerned that Attachment A does not contain enough language to support an entity that implements this practice. This attachment needs to clearly state that following your performance-based maintenance practices satisfies an entity's compliance obligations. Entities should not be subject to non-compliance over disagreements with their performance-based maintenance methodology.
Response: The SDT thanks you for your comments. The SDT believes Attachment A does contain enough language to support PBM, and this language is further supported by technical guidance from Section 9 of the Supplementary Reference Document (page 15). Additionally, R3 of the standard specifically provides that an entity that follows the requirements detailed in Attachment A is indeed in compliance. The SDT will consider any		

Organization	Yes or No	Question 5 Comment
suggested improvements.		
E.ON U.S.	No	E.ON U.S. recommends keeping with time-based intervals (and the improvement thereof) and staying clear of condition-based performance for the generating stations. But that is not meant to preclude other companies from doing condition-based, if they so prefer.
Response: The SDT thanks you for your comments.		
Indianapolis Power & Light Co.	No	Establishing historical performance and keeping the documentation up to date makes this almost useless
Response: The SDT thanks you for your comments. Entities are not required to use PBM.		
Florida Municipal Power Agency, and its Member Cities	No	FMPA believes that the documented process outlined in Attachment A; "Criteria for Performance Based Protection System Maintenance Program" is biased towards larger entities. The requirement that the minimum population of 60 individual components of a particular segment is required to make a component applicable to this program automatically eliminates most of the small or medium sized entities. Further the need to first test a minimum of 30 individual components in any segment reinforces the same size limitation. FMPA suggests that the Performance-Based Protection System Maintenance Program allow for regional shared databases applicable towards meeting the establishment and testing criteria of similar individual components. This practice will allow for the inclusion of entities of all sizes. This will also provide a greater format for the discussion of lessons learned and improvements to the testing database on a regional basis.
Response: The SDT thanks you for your comments. The requirement for having 60 and testing 30 is based on having a statistically significant number of devices. Please see Section 9.1 of the Supplementary Reference Document (page 16) for a discussion of the statistical basis. The standard allows smaller entities to share data in order to support their ability to utilize performance-based maintenance. See footnote 4 of Attachment A.		
Duke Energy	No	For utilities like us with large numbers of relays it's too complicated, which drives us back to Table 1a.
Response: The SDT thanks you for your comments. Entities are not required to use PBM.		
Illinois Municipal Electric Agency	No	IMEA supports comments submitted by Florida Municipal Power Agency that the process outlined in Attachment A is biased towards larger utilities.
Response: The SDT thanks you for your comments. The requirement for having 60 and testing 30 is based on having a statistically significant number of devices. Please see Section 9.1 of the Supplementary Reference Document (page 16) for a discussion of the statistical basis. The standard allows smaller entities to share data in order to support their ability to utilize performance-based maintenance. See footnote 4 of Attachment A.		

Organization	Yes or No	Question 5 Comment
City Utilities of Springfield, MO	No	It appears that Attachment A was written for large utilities. Some allocation needs to be made for utilities with smaller numbers of components.
Response: The SDT thanks you for your comments. The requirement for having 60 and testing 30 is based on having a statistically significant number of devices. Please see Section 9.1 of the Supplementary Reference Document (page 16) for a discussion of the statistical basis. The standard allows smaller entities to share data in order to support their ability to utilize performance-based maintenance. See footnote 4 of Attachment A.		
Saskatchewan Power Corporation	No	Saskatchewan agrees with the approach, but requires clarification in the definition of segment. The definition uses a population of 60 or more individual components but in the establishment of a PSMP, it only asks for a population of 30 or more. Which number will be used to define the segment?
Response: The SDT thanks you for your comments. The requirement is that a minimum population of 60 units be present, and that at least 30 units be tested on time-based maintenance (Table 1a) prior to moving to PBM. A minimum of 30 units tested is also used for ongoing analysis of the PBM performance, as specified in Attachment A. Please see Section 9.1 of the Supplementary Reference Document (page 16) for a discussion of the statistical basis.		
Austin Energy	No	See item # 10 Comments
Response: See item #10 response.		
Wolverine Power Supply Cooperative, Inc.	No	See question 2 response
Response: See question 2 response.		
Northeast Power Coordinating Council	No	The concept is acceptable, but the requirements to follow in Appendix A seem to be a deterrent from attempting to use this process. Is the term “common factors” meant to take into account variables at locations that can affect the components” performance (lightning, water damage, humidity, heat, cold)”
Response: The SDT thanks you for your comments. The SDT has attempted to make Attachment A as straight forward as possible. The term “common factors” does mean common variables that are expected to affect performance of the component such as lightning, water damage, humidity, heat and cold. The term also means common variables such as design, manufacture, performance history, etc that are expected to affect performance of the component.		
US Bureau of Reclamation	No	The parameters established can only be implemented with documentation that defined in the document but is

Organization	Yes or No	Question 5 Comment
		not readily available.
Response: Before utilizing a PBM for their Protection Systems, an entity must develop the supporting documentation via application of a time-based program (using the Table 1a intervals) in accordance with Attachment A.		
CPS Energy	Yes	
Detroit Edison	Yes	
Dynegy	Yes	
Electric Market Policy	Yes	
ENOSERV	Yes	
Entergy Services, Inc	Yes	
Georgia System Operations Corporation	Yes	
Lower Colorado River Authority	Yes	
Manitoba Hydro	Yes	
Nebraska Public Power District	Yes	
NextEra Energy Resources	Yes	
Oncor Electric Delivery	Yes	
Ontario Power Generation	Yes	
Operations and Maintenance	Yes	

Organization	Yes or No	Question 5 Comment
PacifiCorp	Yes	
Pepco Holdings Inc.	Yes	
Platte River Power Authority Maintenance Group	Yes	
RRI Energy	Yes	
SCE&G	Yes	
SERC (PCS)	Yes	
Southern Company	Yes	
Transmission Owner	Yes	
Western Area Power Administration	Yes	
Wisconsin Electric	Yes	
Xcel Energy	Yes	
FirstEnergy	Yes	Although we agree with the parameters of the proposed PBM, we have the following comments: 1. We question the inclusion of Misoperations in countable events as described in footnote 4. Since standard PRC-004 already requires analysis and mitigation of Protection System Misoperations through a Corrective Action Plan, entities should not be required to repeat this analysis and mitigation in PRC-005. We ask that the SDT clarify the requirements to allow a tie between PRC-005 and PRC-004 so as to assure work is not duplicated. 2. We are not receptive to using this methodology to develop intervals due to the detailed tracking and analysis that will be required to establish maximum intervals. The approach may suit other utilities and thus, we are not opposed to the methodology being contained within the standard.

Organization	Yes or No	Question 5 Comment
Response: The SDT thanks you for your comments. **1. PRC-004 should be used to handle reporting of the Misoperation and its corrective action. However, the misoperation should be included as a countable event required for PBM analysis. The documentation of correction of problems per PRC-004 should also suffice to address resolution of the corresponding maintenance-correctable issue for PRC-005.** **2. Entities are not required to use PBM.**		
JEA	Yes	Approach appears to be well explained. Only one are of concern and that would be delaying the advancement of replacement of EM relay systems with microprocessor, if the PBM population were to decrease below the 60, resulting in not meeting the sample minimum population criteria. Falling below this 60 population sample minimum, might result in an immediate compliance violation.
Response: The SDT thanks you for your comments. The standard is not meant to delay replacement of relays. An entity should do an annual analysis of it segment size and countable events. As the segment population approaches 60, the entity should transition back to a time-based program per Table 1a, Table 1b, or 1c, as appropriate, and assure that the remaining components are maintained accordingly.		
Exelon Generation Company, LLC	Yes	None
TVA	Yes	Should allow inclusion of dc systems as well.
Response: The SDT thanks you for your comments. A Station DC supply that does not include batteries may be fit into a PBM. See Section 15 of the Supplementary Reference Document (page 21) (and FAQ IV-3-G, page 26) for a discussion of why station batteries cannot be included in a PBM.		
Ameren	Yes	While we agree with the approach, batteries should be allowed, not excluded.
Response: The SDT thanks you for your comments. See Section 15 of the Supplementary Reference Document (page 21) (and FAQ IV-3-G, page 26) for a discussion of why station batteries cannot be included in a PBM.		
Puget Sound Energy	Yes	

6. The SDT has provided a "Supplementary Reference Document" to provide supporting discussion for the Requirements within the standard. Do you have any comments on the Supplementary Reference Document? Please explain in the comment area.

Summary Consideration: In general, respondents expressed appreciation for the additional technical discussion included within this document. The SDT responded to many comments by explaining the relationship between the Standard and the Reference Document. Several respondents suggested that elements of the extensive discussion be contained within the standard itself, which is contrary to the guidance within the paradigm for NERC Standards.

Organization	Yes or No	Question 6 Comment
Bonneville Power Administration		Will this document be a part of the standard? Are its explanations the official interpretation of the standard?
Response: The FAQ and the Supplementary Reference Document are provided as references to present detailed discussions about determination of maintenance intervals and other useful information regarding establishment of a maintenance program, and do not have statutory effect. The SDT believes that these documents provide potentially useful information to the entity in developing and sustaining an effective PRC-005 program, and hopes that these documents will be useful to the entity in establishing support of their program when it is reviewed by the Compliance Enforcement Authority. It is the drafting team's intent that these documents be posted with the standard when approved similarly to the CIP FAQ and the PRC-023 reference document. In order that these documents are initially posted with PRC-005-2 when approved, they must undergo industry comment and review, and the Standards Committee must be convinced through that process that the documents align with the standard and are relevant to the standard. With future revisions to PRC-005, the FAQ and Supplemental Reference Document will have to undergo SDT review and industry comment to remain posted with the standard, and the Standards Committee will have to remain convinced of their accuracy and relevance.		
American Transmission Company	No	
City Utilities of Springfield, MO	No	
Detroit Edison	No	
Electric Market Policy	No	
ENOSERV	No	

Organization	Yes or No	Question 6 Comment
Florida Municipal Power Agency, and its Member Cities	No	
Georgia System Operations Corporation	No	
Illinois Municipal Electric Agency	No	
Indianapolis Power & Light Co.	No	
JEA	No	
Manitoba Hydro	No	
Nebraska Public Power District	No	
NextEra Energy Resources	No	
Northeast Power Coordinating Council	No	
Operations and Maintenance	No	
Pepco Holdings Inc.	No	
RRI Energy	No	
SCE&G	No	
SERC (PCS)	No	
Transmission Owner	No	
TVA	No	

Organization	Yes or No	Question 6 Comment
Western Area Power Administration	No	
Wolverine Power Supply Cooperative, Inc.	No	
US Bureau of Reclamation	No	The document will require revisions. 1. Performance based maintenance is establishing a strategy to achieve a desired performance. The document limits strategy to statistical analysis of failure rates. 2. The document assumes a modern protection system with a high level of monitoring. Facilities which barely qualify would not have high end monitoring installed. 3. The document also refers to "exercising a circuit breaker through t relay tripping circuits using remote control capabilities via data communication." This repeated several times throughout the document as a means of increasing the TBM. This function, if indeed used, would require maintenance. This function is very dangerous and could introduce a cyber vulnerability.
Response: The SDT thanks you for your comments. **1. As you say, PBM is an option to achieve a desired performance. The result should be a documented acceptable level of performance, and statistical analysis of failure rates is required as a minimum method to achieve this level of performance.** **2. The standard addresses all generations of equipment with varying levels of monitoring capability, and establishes requirements which address the equipment with no monitoring capability, as well as facilitating effective use of monitoring capabilities of the equipment that DOES have those capabilities.** **3. Exercising a circuit breaker through the relay tripping circuits via a remote communication method is an available option to those entities that wish to use it to satisfy maintenance intervals established in the standard, not to increase them; this is presented as an example of how entities may be able to use remotely performed activities to minimize maintenance requiring station visits. If an entity is concerned about risks presented from remote maintenance activities, they are not required to use such methods. Issues relating to cyber security are outside the scope of this Standard.**		
Ontario Power Generation	No	A well prepared and useful document.
Response: The SDT thanks you for your support.		
MRO NERC Standards Review	No	N/A

Organization	Yes or No	Question 6 Comment
Subcommittee		
Exelon Generation Company, LLC	No	None
Entergy Services, Inc	No	1. Regarding Section 2.3, Applicability of New Protection System Maintenance Standards, there needs to be clarification and examples of applicable relaying associated with the language: and that are applied on, or are designed to provide protection for the BES. For example, is the application of reverse power schemes and directional overcurrent schemes considered applicable when considering the impact to the protection of the BES? 2. We agree with the application of the term "calendar" in the PRC-005-2 Protection System Maintenance Supplementary Reference document. There should be enough flexibility in interval assignments to allow for annual maintenance planning, scheduling and implementation.
Response: The SDT thanks you for your comments. **1. Please refer to Clause 4 (Applicability) of the standard itself, and to the FAQ document (FAQ III – 2 – A, page 20), for further information on this. It appears that this comment is focused on generation plants; Clause 4.2.5.1 of the draft standard states, "Protection system components that act to trip the generator either directly or via generator lockout or auxiliary tripping relays." This Applicability clause would have to be applied to the specific instance of concern.** **2. The SDT thanks you for your comments.**		
PacifiCorp	No	Very helpful.
Response: The SDT thanks you for your comments.		
Austin Energy	Yes	
Ameren	Yes	1) We disagree with the page 22 statement that batteries cannot be a unique population segment of a PBM. 2) What role does the Supplement play in Compliance Monitoring and Enforcement?
Response: The SDT thanks you for your comments. **1. Thank you for your comment concerning your disagreement with the standard Drafting Team that batteries cannot be a unique population segment of a PBM. In FAQ IV-3-G (page 26) and the Supplementary Reference Document (See Section 15.4, page 23), the Drafting team states why batteries are excluded from PBM. The Drafting Team still believes, that for the reasons stated in the FAQ, that batteries cannot be a unique population segment of a**		

Organization	Yes or No	Question 6 Comment
PBM. There was much debate on this topic in the standard drafting process. It is well known that like batteries will behave differently for even slight variations of outside influences such as temperature, station load, battery charger action, number of duty cycles and even time spent on inventory shelf before first charge. The manufacturers' literature all state that you must control outside influences to attain a level of satisfactory performance. To prove this level of satisfactory performance (and possibly to help detect poor performance from outside influences) you must conduct certain routine tests. Routine tests are included within the Standard's tables of maintenance activities. **2. The FAQ and the Supplementary Reference Document are provided as references to present detailed discussions about determination of maintenance intervals and other useful information regarding establishment of a maintenance program, and do not have statutory effect. The SDT believes that these documents provide potentially useful information to the entity in developing and sustaining an effective PRC-005 program, and hopes that these documents will be useful to the entity in establishing support of their program when it is reviewed by the Compliance Enforcement Authority. It is the drafting team's intent that these documents be posted with the standard when approved similarly to the CIP FAQ and the PRC-023 reference document. In order that these documents are initially posted with PRC-005-2 when approved, they must undergo industry comment and review, and the Standards Committee must be convinced through that process that the documents align with the standard and are relevant to the standard. With future revisions to PRC-005, the FAQ and Supplemental Reference Document will have to undergo SDT review and industry comment to remain posted with the standard, and the Standards Committee will have to remain convinced of their accuracy and relevance.**		
FirstEnergy	Yes	1. Sec. 2.3 (pg. 4) This section appears to be discussing the purpose of the standard and not the applicability. We suggest changing the title of Sec. 2.3 to "Purpose of New Protection System Maintenance Standard." Also, in Sec. 2.3 it states: "The applicability language has been changed from the original PRC-005: '... affecting the reliability of the Bulk Electric System (BES) ...' To the present language: '... and that are applied on, or are designed to provide protection for the BES.' However, the posted Draft 1 of PRC-005-2 still has the original Purpose statement. Is the SDT planning to revise the Purpose statement as discussed in Sec. 2.3 of the Ref. document? It appears that this statement is included in the applicability section 4.2.1 but believe it is more appropriate as a general purpose statement applying to the whole standard. 2. Sec. 2.4 (pg. 4) Remove the extra word "that" from the second sentence of this section. 3. In the Supplementary reference, section 15.4 Batteries and DC Supplies, third paragraph, the SDT indicates these tests are recommended in IEEE 450-2002 to ensure that there are no open circuits in the battery string. This is essentially a continuity check of the battery string. In the fourth paragraph, the SDT states that "..."continuity" was introduced into the standard to allow the owner to choose how to verify continuity of a battery set by various methods, and not to limit the owner to the two methods recommended in the IEEE standards." 4. The SDT in Table 1a, the Maintenance Activity "Verify continuity and cell integrity of the entire battery", and in Table 1b, the Maintenance Activity "Verify electrical continuity of the entire battery". Based on the information in the Supplementary reference, the owner has to choose a method to verify continuity and the measurement of specific gravity and cell temperatures could be the selected method, however it should not be a required maintenance activity as shown in Tables 1a and 1b.

Organization	Yes or No	Question 6 Comment
Response: The SDT thanks you for your comments. **1. This clause of the document DOES specifically discuss the Applicability clause of the Standard; PRC-005-2 Section 4.2.1 states "Protection Systems that are applied on, or are designed to provide protection for the BES."** **2. The Supplementary Reference Document has been changed in consideration of your comment – the extra "that" has been removed.** **3. The standard and FAQ (See FAQ II-5-D, page 13) have been modified in consideration of your comments concerning checking continuity using specific gravity.** **4. Table 1a and Table 1b of the draft standard have been modified to remove requirements relating to measurement of cell temperature and specific gravity.**		
CPS Energy	Yes	Adds to the confusion with the standard, FAQ, and Supplemental. The three documents at times describe things a little differently.
Response: The SDT thanks you for your comments and is aligning the associated documents with changes to the standard.		
AEP	Yes	Although helpful in understanding and clarifying intent, the requirements of a standard should be clearly written so that multiple, lengthy supporting documents are not needed. These supporting documents do not get recorded into the registry as part of the standard and may or may not be used by auditors during compliance audits which could lead to different interpretations.
Response: The SDT thanks you for your comments. The FAQ and Supplementary Reference Document are provided as references to present detailed discussions about determination of maintenance intervals and other useful information regarding establishment of a maintenance program, and do not have statutory effect. The SDT believes that these documents provide potentially useful information to the entity in developing and sustaining an effective PRC-005 program, and hopes that these documents will be useful to the entity in establishing support of their program when it is reviewed by the Compliance Enforcement Authority. It is the drafting team's intent that these documents be posted with the standard when approved similarly to the CIP FAQ and the PRC-023 reference document. In order that these documents are initially posted with PRC-005-2 when approved, they must undergo industry comment and review, and the Standards Committee must be convinced through that process that the documents align with the standard and are relevant to the standard. With future revisions to PRC-005, the FAQ and Supplemental Reference Document will have to undergo SDT review and industry comment to remain posted with the standard, and the Standards Committee will have to remain convinced of their accuracy and relevance.		
CenterPoint Energy	Yes	CenterPoint Energy believes the need for an extensive "Supplementary Reference Document", in addition to 13 pages of tables and an attachment in the standard itself, illustrates that the proposal is too prescriptive and complex for most entities to practically implement. CenterPoint Energy would prefer the SDT leave the existing requirements substantially intact or, if most industry commenters prefer the SDT's approach, that the SDT

Organization	Yes or No	Question 6 Comment
		attempt to simplify it.
Response: The SDT thanks you for your comments. The NERC Standard Development Procedure establishes that the standard prescribe requirements, but avoid "how to" or "why" discussions. The SDT, in accordance with FERC Order 693, has prescribed maximum allowable maintenance intervals for various Protection System Components, has provided opportunities for entities to use advanced technologies to perform physical maintenance less frequently, and to use analytical techniques to customize their intervals. At its simplest, an entity could implement a pure time-based program utilizing Table 1a, and much of the additional explanation in the Supplementary Reference Document would not be needed by that entity.		
Public Service Enterprise Group Companies	Yes	Figure 2 "typical generation system" shows a typical auxiliary medium voltage bus, suggest that a line of distinction (dotted line) be added to the figure that defines the element connected to the BES (station Aux Transformer - SAT) and equipment not associated with protection of the SAT be shown as not part of the BES-PSMP.
Response: The SDT thanks you for your comments. The figures are provided to help describe the components of the Protection System, and are not intended to fully describe the boundaries of the BES, the definition of which may vary by Region.		
Wisconsin Electric	Yes	How much authority or weight will this document have with Compliance staff? If potential violations of the standard requirements are alleged by Compliance staff, can this document be cited by an entity when the document provides clarifying information on the requirements?
Response: The SDT thanks you for your comments. This document is not part of the standard, but is intended to provide the rationale of the SDT, as well as guidance about how the various requirements might be met. The explanations are not an "official" interpretation of the standard, but may be useful to determine how to implement various facets of the standard.		
Green Country Energy LLC	Yes	Huge help to us!
Response: Thank you for your support.		
Platte River Power Authority Maintenance Group	Yes	1. It isn't clear in the Supplementary Reference Document why lock-out relays (86) are included as a component of Protection Systems that require a 6 year maximum interval. Historically we haven't experienced any failures with lock-out relays and feel the risk of causing a system reliability issue by removing it from service and restoring it far outweighs the benefits of testing it. What, if any evidence, i.e. equipment failure, does the standard drafting team use to mandate routine testing of 86 devices? Are we fixing something that isn't broke here? 2. The FERC order directed NERC to submit a modification to PRC-005-1 that includes a requirement that maintenance and testing of a protection system be carried out within a maximum allowable interval that is

Organization	Yes or No	Question 6 Comment
		appropriate to the type of the protection system and its impact on the reliability of the BPS. It would seem more appropriate to allow each entity to set their own maximum allowable interval based on studies and historical data of their specific protection system and impact on the reliability of the BPS opposed to a blanket approach that covers all systems regardless of their size or system configuration.
Response: The SDT thanks you for your comments. **1. There are events in the industry that point to a failure of an electro-mechanical 86 device failing, and these devices are essential to proper functioning of the Protection System. PBM principles can be utilized to extend maintenance intervals. (See Supplementary Reference Document, Section 9, page 15.)** **2. FERC Order 693 directed that NERC establish maximum maintenance intervals, which does not provide the latitude to continue to allow entities to set their own intervals. The SDT has, however, added the ability of an entity to follow PBM principles, as you describe, thus adjusting the time intervals between required hands-on maintenance activity to reflect an entity's experience.**		
Progress Energy	Yes	Progress Energy is concerned that separating this document from the standard may lead to issues down the road. If the desire is to consolidate and clarify existing standards, then the two documents should be merged. Otherwise the reference document may get lost from the standard, or might get changed without due process, or might not even be recognized by FERC.
Response: The SDT thanks you for your comments. The FAQ and Supplementary Reference Document are provided as references to present detailed discussions about determination of maintenance intervals and other useful information regarding establishment of a maintenance program, and do not have statutory effect. The SDT believes that these documents provide potentially useful information to the entity in developing and sustaining an effective PRC-005 program, and hopes that these documents will be useful to the entity in establishing support of their program when it is reviewed by the Compliance Enforcement Authority. It is the drafting team's intent that these documents be posted with the standard when approved similarly to the CIP FAQ and the PRC-023 reference document. In order that these documents are initially posted with PRC-005-2 when approved, they must undergo industry comment and review, and the Standards Committee must be convinced through that process that the documents align with the standard and are relevant to the standard. With future revisions to PRC-005, the FAQ and Supplemental Reference Document will have to undergo SDT review and industry comment to remain posted with the standard, and the Standards Committee will have to remain convinced of their accuracy and relevance.		
Southern Company	Yes	1.Section 15.3 DC Control Circuitry: Although we agree with the premise that auxiliary trip relays and lock-out relays are similar in nature to EM relays and breakers, we believe that based on past performance, a complete functional test trip every 6 years is not warranted. This complete functional test introduces additional risk to our maintenance program not only from a human error perspective but also from the additional frequency of switching and outages required. Our experience has shown that 12 years is an appropriate maximum time interval (rather than 6 years.) 2. The Protection System Maintenance Supplementary Reference (Draft 1), section 8.4, states that the intervals using the term "calendar" are allowed to be completed by the end of the applicable period, not necessarily

Organization	Yes or No	Question 6 Comment
		exactly at the interval specified. The only intervals specified in the PRC-005-2 tables are “calendar years” and “months”. We believe that the “calendar” description should be extended to the “months” designator also to also provide some maintenance flexibility (i.e. if an inspection were performed March 1st and was on a three month interval, it would not be required until the end of June). This section should remove the term “calendar” and use “months” and “years” with an appropriate explanation of the intent of the durations.
Response: The SDT thanks you for your comments. **1. The SDT believes that the intervals within the standard are appropriate. The standard permits the use of Performance-Based maintenance if an entity has documented experience that supports longer intervals.** **2. The standard was modified to append “Calendar” in front of “Months” in the Tables in consideration of your comment.**		
Dynegy	Yes	Suggest including operational verification (i.e. analysis of protection system operation after a system event) as an acceptable method of verification.
Response: The SDT thanks you for your comments. Verification through analysis of events is an acceptable method of verification. Section 11 of the Supplementary Reference Document (page 18) speaks to this topic.		
Oncor Electric Delivery	Yes	The “Supplementary Reference Document” provides good technical justification for the various approaches to a maintenance program (Time Based, Performance Based, and Condition Based) or combinations of these programs that an owner of a Protection System can follow.
Response: The SDT thanks you for your support.		
Xcel Energy	Yes	The information in the supplementary reference document is very helpful and valuable. Yet, it is not clear how the document would be managed/revised, nor what role it plays in compliance monitoring. There needs to be a clear understanding if everything in the document is required for compliance, e.g. criteria for monitored systems, etc. Additionally, we feel that evidence should be addressed within the supplementary reference document.
Response: The SDT thanks you for your support. The FAQ and Supplementary Reference Document are provided as references to present detailed discussions about determination of maintenance intervals and other useful information regarding establishment of a maintenance program, and do not have statutory effect. The SDT believes that these documents provide potentially useful information to the entity in developing and sustaining an effective PRC-005 program, and hopes that these documents will be useful to the entity in establishing support of their program when it is reviewed by the Compliance Enforcement Authority. It is the drafting team's intent that these documents be posted with the standard when approved similarly to the CIP FAQ and the PRC-023 reference document. In order that these documents are initially posted with PRC-005-2 when approved, they must undergo		

Organization	Yes or No	Question 6 Comment
industry comment and review, and the Standards Committee must be convinced through that process that the documents align with the standard and are relevant to the standard. With future revisions to PRC-005, the FAQ and Supplemental Reference Document will have to undergo SDT review and industry comment to remain posted with the standard, and the Standards Committee will have to remain convinced of their accuracy and relevance. **The Supplementary Reference Document and FAQ have been updated to include a discussion pertaining to evidence for compliance.**		
Saskatchewan Power Corporation	Yes	The supplementary reference document is useful information if properly explained and justified. Are the suggestions in the reference document to become part of the standard, or simply recommendations of best practice from industry and serve as a document to reduce the number of interpretations requested?
Response: The FAQ and Supplementary Reference Document are provided as references to present detailed discussions about determination of maintenance intervals and other useful information regarding establishment of a maintenance program, and do not have statutory effect. The SDT believes that these documents provide potentially useful information to the entity in developing and sustaining an effective PRC-005 program, and hopes that these documents will be useful to the entity in establishing support of their program when it is reviewed by the Compliance Enforcement Authority. It is the drafting team's intent that these documents be posted with the standard when approved similarly to the CIP FAQ and the PRC-023 reference document. In order that these documents are initially posted with PRC-005-2 when approved, they must undergo industry comment and review, and the Standards Committee must be convinced through that process that the documents align with the standard and are relevant to the standard. With future revisions to PRC-005, the FAQ and Supplemental Reference Document will have to undergo SDT review and industry comment to remain posted with the standard, and the Standards Committee will have to remain convinced of their accuracy and relevance.		
Lower Colorado River Authority	Yes	The Supplementary Reference is well written and helpful in explaining the drafting teams thought process.
Response: The SDT thanks you for your support.		
Duke Energy	Yes	We strongly believe that this document should be made a part of the standard, either as an Attachment or worked into the requirements and tables. This will bring clarity to PRC-005 that is needed to get away from all the past problems that were due to a lack of clarity with the previous PRC-005 standards. Also, all the explanations and guidance lose force if they are not part of the standard. Auditors will only be bound by the standard.
Response: The SDT thanks you for your comments. The NERC Standard Development Procedure establishes that the standard prescribe requirements, but avoid "how to" or "why" discussions. The SDT, in accordance with FERC Order 693, has prescribed maximum allowable maintenance intervals for various Protection System Components, has provided opportunities for entities to use advanced technologies to perform physical maintenance less frequently, and to use analytical techniques to customize their intervals. At its simplest, an entity could implement a pure time-based program utilizing Table 1a, and much of the additional explanation in the Supplementary Reference Document would not be needed by that entity.		

Organization	Yes or No	Question 6 Comment
ITC Holdings	Yes	1. Will clarifications in the Reference Document be enforceable with the standard? 2. For example page 11 of the reference document notes "Voltage & Current Sensing Device circuit input connections to the protection system relays can be verified by comparison of known values of other sources on live circuits or by using test currents and voltages on equipment out of service for maintenance." Can a maintenance program be confidently established using this or other testing methods included in the reference document? 3. A condensed definition of "Condition Based Maintenance" as described in Section 6 of the Reference document should be included in the standard document itself.
Response: The SDT thanks you for your comments. **1. The FAQ and Supplementary Reference Document are provided as references to present detailed discussions about determination of maintenance intervals and other useful information regarding establishment of a maintenance program, and do not have statutory effect. The SDT believes that these documents provide potentially useful information to the entity in developing and sustaining an effective PRC-005 program, and hopes that these documents will be useful to the entity in establishing support of their program when it is reviewed by the Compliance Enforcement Authority. It is the drafting team's intent that these documents be posted with the standard when approved similarly to the CIP FAQ and the PRC-023 reference document. In order that these documents are initially posted with PRC-005-2 when approved, they must undergo industry comment and review, and the Standards Committee must be convinced through that process that the documents align with the standard and are relevant to the standard. With future revisions to PRC-005, the FAQ and Supplemental Reference Document will have to undergo SDT review and industry comment to remain posted with the standard, and the Standards Committee will have to remain convinced of their accuracy and relevance.** **2. The NERC Standard Development Procedure establishes that the standard prescribe requirements, but avoid "how to" or "why" discussions.** **3. Condition Based Maintenance is not intended to be a defined term; however, a discussion of the attributes of condition-based maintenance is captured within the header of Table 1b and Table 1c of the Standard.**		
E.ON U.S.	Yes	1. With reference to Section 8.1., under additional notes is the following bullet:5. Aggregated small entities will naturally distribute the testing of the population of UFLS/UVLS systems and large entities will usually maintain a portion of these systems in any given year. Additionally, if relatively small quantities of such systems do not perform properly, it will not affect the integrity of the overall program. This implies that incorrect performance of a "relatively small quantity" of UFLS relays is acceptable but with the understanding that it is not optimal. E.ON U.S. agrees with this statement in principle, in that the UFLS program is spread out across the system, and there is not a one to one performance expectation as there is with a transmission line or generation protection system. This calls into question the required intervals for testing of these types of relays, and the performance expectations in a PBM program. Given the number of relays spread out across the distribution system, the testing requirements of UFLS relays require longer testing intervals than other bulk transmission system

Organization	Yes or No	Question 6 Comment
		components. 2. 8.2 Is this requirement expected to be retroactive? That is, if the previous retention policy was followed to the letter, an entity could be fully in compliance based on the previous standard, but not be in compliance if PRC-005-2 were retroactive. 3. 8.3 And 8.4 This discussion explains how time based maintenance intervals were determined. The conclusion is based upon surveys of SPCTF members and their existing practices, and seemed to arrive at a maintenance interval based upon a simple average weighed by the size of the reporting utility. No consideration appears to have been given to utilities who have successfully operated with longer test and calibration intervals. In section 5 of the Supplementary Reference it is stated that "excessive maintenance can actually decrease the reliability of the component or system." With that in mind, some of the intervals defined in the table seem too aggressive. 4. With the proposed PRC-005-2, the Drafting Team has effectively shortened the recommendation for UFLS relays from 10 years to 6 years, with reference to the recommendations of the Protection System Maintenance Technical Reference. E.ON U.S. believes that this is inconsistent with previous comments in Section 8.1, bullet 5 of the notes. 5. Consistent with the comments above and based on E ON U.S.'s internal testing, calibration and verification experience, E.ON U.S. recommends maintenance on UFLS relays that comprise a protection scheme distributed over the power system to be no less than 10 years for Level 1 monitoring and no less than 15 years for Level 2 monitoring. For a PBM program, require the number of countable events within a segment to be no more than 10%, not 4% as proposed.

Response: The SDT thanks you for your comments.

1. The SDT believes that the intervals specified in the standard are appropriate.

2. The new standard will be effective according to the dates established within the standard. The Implementation Plan posted with the standard establishes a path for entities to migrate from their current practices and schedules to those imposed in this standard when approved.

3. Entities that have successful experience with equipment at intervals beyond the Standard's tables can utilize the Standard's PBM option.

4. The SDT believes that the intervals specified in the standard are appropriate, and disagrees that the intervals are inconsistent with the cited clause of the Supplementary Reference Document.

5. Allowing the countable events to be increased to 10% would clearly allow an entity to increase its time interval between testing if there was a failure of less than 10% of the testing segment. However, SDT contends that would be an unacceptably high rate of mal-performing Protection System components, and would be detrimental to system reliability. The acceptable failure rate needs to balance between a goal of ultimate reliability and what could be reasonably expected of a well-performing component population.

Organization	Yes or No	Question 6 Comment
AECI	No	
Puget Sound Energy	Yes	PSE appreciates this document as it provides a lot of further clarity. However, we wonder how this document might be used during an audit. What is the formal process for the supplementation reference document to be changed? How will entities be notified?
Response: The SDT thanks you for your support. This document is not part of the standard, but is intended to provide the rationale of the SDT, as well as guidance about how the various requirements might be met. The explanations are not an "official" interpretation of the standard, but may be useful to determine how to implement various facets of the standard. The FAQ and Supplementary Reference Document are provided as references to present detailed discussions about determination of maintenance intervals and other useful information regarding establishment of a maintenance program, and do not have statutory effect. The SDT believes that these documents provide potentially useful information to the entity in developing and sustaining an effective PRC-005 program, and hopes that these documents will be useful to the entity in establishing support of their program when it is reviewed by the Compliance Enforcement Authority. It is the drafting team's intent that these documents be posted with the standard when approved similarly to the CIP FAQ and the PRC-023 reference document. In order that these documents are initially posted with PRC-005-2 when approved, they must undergo industry comment and review, and the Standards Committee must be convinced through that process that the documents align with the standard and are relevant to the standard. With future revisions to PRC-005, the FAQ and Supplemental Reference Document will have to undergo SDT review and industry comment to remain posted with the standard, and the Standards Committee will have to remain convinced of their accuracy and relevance.		

7. The SDT has provided a "Frequently-asked Questions" document to address anticipated questions relative to the standard. Do you have any comments on the FAQ? Please explain in the comment area.

Summary Consideration: In general, respondents expressed appreciation for the additional technical discussion included within this document. The SDT responded to many comments by explaining the relationship between the standard and the FAQ. Several respondents suggested that elements of the extensive discussion be contained within the standard itself, which is contrary to the guidance within the paradigm for NERC Standards. Additionally, many of the comments in Questions 1-5 were addressed by developing additional FAQ content and referring the respondents to the revised FAQ.

Organization	Yes or No	Question 7 Comment
SCE&G		1. The FAQ should be expanded to address the issues raised above with verification of trip circuits as to what is an acceptable method meeting the intent of the standard. 2. We also suggest changing "prove" to "verify" on FAQ 3a to be consistent with the wording of the requirement. 3. Also, for a single bus with one set of bus potential transformers, how does one verify proper functioning of the potentials? Is a reasonableness criterion adequate?
Response: The SDT thanks you for your comments. **1. The SDT agrees. The FAQ has been modified to address your concerns. (See FAQ II-4-E, page 11.)** **2. The SDT agrees. The FAQ has been modified to address your concerns. (See FAQ II-3-A, page 8.)** 3. **The entity must verify that the protective devices are receiving the expected potential from the potential transformers or equivalent. If the potentials, both magnitude and phase angle, can be determined to be reasonable, that would suffice. (See FAQ II-3-A, page 8.)**		
Bonneville Power Administration		Will this document be a part of the standard? Are its explanations the official interpretation of the standard?
Response: The SDT thanks you for your comments. **The FAQ and Supplementary Reference Document are provided as references to present detailed discussions about determination of maintenance intervals and other useful information regarding establishment of a maintenance program, and do not have statutory effect. The SDT believes that these documents provide potentially useful information to the entity in developing and sustaining an effective PRC-005 program, and hopes that these documents will be useful to the entity in establishing support of their program when it is reviewed by the Compliance Enforcement Authority. It is the drafting team's intent that these documents be posted with the standard when approved similarly to the CIP FAQ and the PRC-023 reference document.**		

Organization	Yes or No	Question 7 Comment
City Utilities of Springfield, MO	No	
Dynegy	No	
Electric Market Policy	No	
ENOSERV	No	
Florida Municipal Power Agency, and its Member Cities	No	
Georgia System Operations Corporation	No	
Green Country Energy LLC	No	
Indianapolis Power & Light Co.	No	
Operations and Maintenance	No	
Platte River Power Authority Maintenance Group	No	
TVA	No	
US Bureau of Reclamation	No	
Western Area Power Administration	No	
Wisconsin Electric	No	
Wolverine Power Supply Cooperative, Inc.	No	

Organization	Yes or No	Question 7 Comment
E.ON U.S.	No	E.ON U.S. disagrees with commissioning tests not being considered as a baseline for subsequent maintenance activities. Commissioning tests should be counted as the initial testing in the scheme of a maintenance program
Response: The SDT thanks you for your comments. **As long as the requirements of the standard are met by the commissioning tests, they can "start the clock" for future maintenance testing. The FAQ has been reworded to clarify this point. (The revised FAQ is IV-2-B, page 23.)**		
Ontario Power Generation	No	It was a good idea to prepare such a document.
Response: The SDT thanks you for your support.		
Pepco Holdings Inc.	No	Item 3.B. (Page 6) claims that a small measurable quantity in 3I0 and 3V0 inputs to relays -may- be evidence that the circuit is performing properly. This statement is weak at best, and incorrect at worst. A balanced transmission system may exhibit 3I0 and 3V0 quantities that are not measurable, and those that are measurable cannot be compared to other readings, since CT/PT error often exceeds system imbalance. Since these inputs are verified at commissioning, recommend that maintenance verification require ensuring that phase quantities are as expected and that 3IO and 3VO quantities appear equal to or close to 0.
Response: The SDT thanks you for your comments. **The SDT agrees; See FAQ II-3-B, page 9.**		
Exelon Generation Company, LLC	No	None
MRO NERC Standards Review Subcommittee	No	Overall, the FAQ's are helpful toward understand what the SDT was thinking. Explanations for questions dealing with the maintenance activities (e.g., battery testing) indicate an attempt to line up the requirement with IEEE standards. While it is commendable to attempt alignment reliability standards with other industry standards, it also begs the question of why requirements that are already covered by other standards should be repeated in reliability standards. In addition, if the other standards are changed, then they could become inconsistent with or contradictory to the reliability standard.
Response: The SDT thanks you for your support. The IEEE standards are voluntary standards, and do not establish any requirements, and also are not measurable. PRC-005 standard requirements are loosely aligned with the IEEE standards and any future minor changes to those IEEE standards would not significantly alter the correlation between PRC-005 standard requirements for batteries and the IEEE recommendations.		

Organization	Yes or No	Question 7 Comment
American Transmission Company	No	Overall, the FAQ's are helpful. Explanations for questions dealing with the maintenance activities (e.g., battery testing) indicate an attempt to line up the requirement with IEEE standards. While commendable to attempt alignment with the industry, it is further justification that maintenance activities should not be included in the standard. Over the long term, technology or IEEE standards could change making the compliance standard inconsistent.
Response: The SDT thanks you for your support. The IEEE standards are voluntary standards, and do not establish any requirements, and also are not measurable. PRC-005 standard requirements are loosely aligned with the IEEE standards and any future minor changes to those IEEE standards would not significantly alter the correlation between PRC-005 standard requirements for batteries and the IEEE recommendations.		
PacifiCorp	No	Very helpful.
Response: Thank you for your support.		
Austin Energy	Yes	
Entergy Services, Inc	Yes	
Manitoba Hydro	Yes	
Public Service Enterprise Group Companies	Yes	1) R1 - PRC-005-1 required the protection owner to supply a "basis" for the chosen maintenance intervals. Is it intended that the new standard will no longer require the protection owners to provide a basis for their intervals as long as they meet (or better) the published required intervals? 2) Compliance 1.4 Data Retention Needs more clarity. Some items require 12 years maximum maintenance interval. However, we may perform the same maintenance in 6 years. The requirement for data retention is 2 maintenance intervals. In this example, does this mean 12 years or 24 years? Are we required to maintain records for the maximum maintenance intervals allowed by the standard or only for the two shorter maintenance intervals that we actually use? 3) Compliance will need some guidance on to what is required for "proper documentation". Generally, the relay technicians will scribe the actual test values for a given tests requiring the application of AC voltage and current. However, as an example, when performing DC checks (DC aux relay), the technician may simply state that the aux relay is "OK" without stating the DC coil pickup value in volts. Is this acceptable? Another example may be when performing battery inspections (i.e., verify proper voltage of station battery, verify that no DC grounds exist, etc), the inspector may simply indicate/document that the battery is "Ok". This would indicate that appropriate 3 month inspections (as per table 1a) were completed and found to be within tolerances. Is this acceptable? If

Organization	Yes or No	Question 7 Comment
		specific details are required to be stored on test media (paper test sheets, computer based data storage, etc), then please make some comments as such. 4) Table 1a DC supply. The 3 month inspection requires "verify that no dc supply grounds are present". This needs further clarification. What is the defined "limit" to determine whether we have a DC ground? The detection methods for determining the presence of a DC ground will vary from indicating light balance to actual DC ammeters or voltmeters. It is assumed that the intent of this requirement is to ensure that there are no full DC grounds (dead shorts) in the DC terminals. Please clarify. 5) In the group by type of BES facility descriptions on pages 15 and 16 there is discussion about generation station auxiliary transformers and associated protection devices. It also cites examples of relays which need not be included even though they could result in tripping of the generating station. The line of demarcation is not well defined in the FAQs or in the standard itself. Suggest that verbiage be added that clearly defines the element (transformer) directly connected to the BES and its associated protection is what is included in the PSMP requirements, items connected at lower voltage (down stream) are not within the PSMP requirement. 6) On page 15, the sample list of what is included in the standard, suggest that the list be expanded to show what is not included (a relay that monitors parameters and is used for control/ alarm but not protection); generator excitation controls that trip an auxiliary exciter. The list of items not included in the PSMP but that could trip the unit should be further defined and expanded.

Response: The SDT thanks you for your comments.

1. The SDT agrees that no basis is required for level 1 monitoring as detailed in Table 1a. Monitoring attributes will be required to meet Table 1b and Table 1c requirements. A performance based program will require further documentation; see Attachment A of the standard.

2. The SDT has modified the Data Retention area of the standard to clarify this.

3. The SDT will consider acceptable forms of evidence when developing the Measures. See the FAQ IV-1-B, page 21. Also, see Section 15.6 (page 24) of the Supplementary Reference Document for a discussion of "evidence".

4. Table 1a has been modified to address this, and an FAQ (FAQ II-5-I, page 15) has been added to clarify this. The revised language in the standard reads:

Check for unintentional grounds.

5. The SDT agrees; the FAQ has been modified to address your concerns see FAQ III-2-A, page 20.

6. The definition of Protection System states that "Protective relays, associated communication systems necessary for correct operation of protective devices, voltage and current sensing inputs to protective relays, station DC supply, and DC control circuitry from the station DC supply through the trip coil(s) of the circuit breakers or other interrupting devices." Controls and alarms are excluded per the definition.

Organization	Yes or No	Question 7 Comment
Ameren	Yes	1) We don't think an Executive Summary is needed. 2) Please include the Supplement's explanation of A/D verification method from Supplement page 9. 3) What role does the FAQ play in Compliance Monitoring and Enforcement? 4) Refer to question 2 and add our items # 2, 3, 4, 5, 7, and 11 to FAQ. 5) Please add FAQ that provides the NERC Compliance Registry Criteria for Generating Facilities, to clarify applicability to >20MVA direct BES connection, aggregate >75MVA etc. 6) FAQ 2A p17 states that commissioning is construction, not maintenance. It seems like you're ignoring the significant verification, testing, inspection, and calibration activities that occur in commissioning. Should the in-service date be assigned to these components for determining their next maintenance? 7) Refer to question 3 and add our items # 4 to FAQ.
Response: The SDT thanks you for your comments. **1. The SDT thanks you for your input.** **2. The SDT agrees; this information was already present in FAQ V-3-B (page 38).** **3. The FAQ and Supplementary Reference Document are provided as references to present detailed discussions about determination of maintenance intervals and other useful information regarding establishment of a maintenance program, and do not have statutory effect. The SDT believes that these documents provide potentially useful information to the entity in developing and sustaining an effective PRC-005 program, and hopes that these documents will be useful to the entity in establishing support of their program when it is reviewed by the Compliance Enforcement Authority. It is the drafting team's intent that these documents be posted with the standard when approved similarly to the CIP FAQ and the PRC-023 reference document.** **4. The SDT agrees; see our response to your comment on Question 2.** **5. The NERC Compliance Registry Criteria and Regional BES definitions are themselves requirements upon entities, and need not be explained within the PRC-005 FAQ.** **6. As long as the requirements of the standard are met by the commissioning tests, they can "start the clock" for future maintenance testing. See FAQ IV-2-B (page 23).** **7. The SDT agrees; see our response to your comment on Question 3.**		
NextEra Energy Resources	Yes	a. NextEra Energy believes the need for an extensive "Supplementary Reference Document", in addition to 13 pages of tables and an attachment in the standard itself, illustrates that the proposal is too prescriptive and complex for most entities to practically implement. NextEra Energy would prefer the SDT leave the existing

Organization	Yes or No	Question 7 Comment
		requirements substantially intact or, if most industry commenters prefer the SDT's approach, that the SDT attempt to simplify it.7. The SDT has provided a "Frequently-asked Questions" document to address anticipated questions relative to the standard. Do you have any comments on the FAQ? Please explain in the comment area. 1 Yes 0 No Comments: a. An alternative to measuring battery specific gravity is to measure float voltage and float current as described in Annex A4 of IEEE Std 450-2002. b. FAQ Page 17 (#1B): It is outside the jurisdiction of the standards development team to determine acceptable forms of evidence. This should be decided by the Regional Entities. c. FAQ Page 15 (#1A): This question should not have been included since it is addressing the definition of BES, which is currently being addressed by another NERC Group. d. FAQ Page 15 (#2): Although the FAQ is not enforceable, the answer provided may be interpreted as enforceable. This should be included in the standard and not in the FAQ.
Response: The SDT thanks you for your comments. **The SDT believes that the level of prescription within the standard is necessary to satisfy the guidance in FERC Order 693, and also to address observations from the Compliance Monitoring entities (the Regional Entities and NERC) that PRC-005-1 is excessively general. FERC Order 672 also specifies that NERC Standards should be clear and unambiguous. The SDT has therefore defined the minimum activities and maximum intervals necessary to implement an effective PSMP.** **a. The SDT has modified the standard in consideration of your comment by removing the maintenance activity of measuring specific gravity.** **b. Other commenters have requested assistance in determining applicable evidence. The SDT has provided guidance that agrees with entities' experience regarding effective evidence during actual audits. See FAQ IV-1-B, page 21 and Supplementary Reference Document, Section 15.6, page 24.** **c. Including the definition of the BES in the FAQ is helpful to some entities, and addresses common questions from other commenters; the FAQ states that the RRO's may have additional criteria.** **d. The FAQ is intended to present examples of applicable devices, and is not intended to be all-inclusive. The requirements are established by the standard definition of Protection System and the section 4 ("Applicability").**		
CPS Energy	Yes	Adds to the confusion with the standard, FAQ, and Supplemental. The three documents at times describe things a little differently.
Response: The SDT thanks you for your comments, however in the future please be more specific and identify the actual discrepancies so we can		

Organization	Yes or No	Question 7 Comment
improve the documents.		
AEP	Yes	Although helpful in understanding and clarifying intent, the requirements of a standard should be clearly written so that multiple, lengthy supporting documents are not needed. These supporting documents do not get recorded into the registry as part of the standard and may or may not be used by auditors during compliance audits which could lead to different interpretations.
Response: The SDT thanks you for your comments. The SDT believes that providing additional references helps clarify the requirements in the standard. The SDT must address the directives of FERC orders 672 and 693 without being too prescriptive within the standard itself. According to the NERC Standard Development Procedure, a standard is to contain only the prescriptive requirements; supporting discussion is to be in a separate document.		
Transmission Owner	Yes	An alternative to measuring battery specific gravity is to measure float voltage and float current as described in Annex A4 of IEEE Std 450-2002.
Response: The SDT has modified the standard in consideration of your comment by removing the maintenance activity of measuring specific gravity.		
SERC (PCS)	Yes	Change “prove” to “verify” on FAQ 3a (under Voltage and Current Sensing Devise Inputs to Protective Relays) to be consistent with the wording of the requirement.
Response: The SDT thanks you for your comments. See FAQ II-3-A (page 8) – the word, “prove” was replaced with “verify” as proposed.		
Detroit Edison	Yes	Example #1 on page 21 states “A vented lead-acid battery with low voltage alarm connected to SCADA. (level 2)”. However, Table 1b indicates that detection and alarming of dc grounds is also required for level 2.
Response: The SDT thanks you for your comments. The cited example is intended to show a mixture of Level 1 and Level 2 monitored components. Those components not equipped with Level 2 monitoring must be maintained in accordance with Table 1a. Also, see the Decision Tree at the end of the FAQ, addressing DC Supply monitoring levels.		
ITC Holdings	Yes	1. FAQ page 6 question 3C should be clarified in the standard document itself. What is the technical justification for omitting insulation testing of the wiring for DC control, potential and current circuits between the station-yard equipment and the relay schemes? We feel this wiring is susceptible to transients which, over time, may compromise the insulation, and therefore should be tested. 2. FAQ page 17 question 2A the standard should define when the first maintenance activity is to be performed. We include our maintenance activities during commissioning, and set the next maintenance due date based on the testing interval.

Organization	Yes or No	Question 7 Comment
		3. Will clarifications in the FAQs be enforceable with the standard? Can a maintenance program be confidently established using this or other answers included in the FAQ's?
Response: The SDT thanks you for your comments. **1. The SDT does not believe that insulation testing needs to be included within the minimum required maintenance activities; the SDT is not aware of a body of evidence that suggests that these tests should be included as a requirement. The proposed standard does not prevent an entity from including such tests in its program if their experience has indicated that such testing is needed. Furthermore, requirements for checking for proper current and voltage at the relays and checking for DC grounds, provides some assurance of cable insulation integrity.** **2. As long as the requirements of the standard are met by the commissioning tests, they can "start the clock" for future maintenance testing. See FAQ IV-2-B, page 23.** **3. The FAQ and Supplementary Reference Document are provided as references to present detailed discussions about determination of maintenance intervals and other useful information regarding establishment of a maintenance program, and do not have statutory effect. The SDT believes that these documents provide potentially useful information to the entity in developing and sustaining an effective PRC-005 program, and hopes that these documents will be useful to the entity in establishing support of their program when it is reviewed by the Compliance Enforcement Authority.**		
Nebraska Public Power District	Yes	On page 17, the answers to questions 2B and 2C indicate that there is no allowance or provision to exceed the Maximum Maintenance Interval under any circumstances, except that natural disasters or other events of force majeure will receive special consideration when determining sanctions. The rigidity of this performance requirement could conceivably require equipment to be tested even though it is out of service in order to remain compliant, adding unnecessary cost and waste to the PSMP of the regulated entities. We believe that a prescriptive process for deferring testing and maintenance beyond the stated interval would be beneficial to allow the necessary flexibility to manage the PSMP effectively.
Response: The SDT thanks you for your comments. The SDT considered this issue when developing the intervals, and realizes that some entities may need to perform certain maintenance activities more frequently to assure that the activities are performed within the required intervals. The SDT is concerned that a "grace period", if permitted, would be used to establish a de-facto longer interval, and that the established intervals would thus not be measurable. Additionally, FERC Order 693 directed that NERC establish maximum maintenance intervals, and allowing for a "grace period" would not conform to this directive. Please refer to Section 8 of the Supplementary Reference Document (page 9) for a discussion on this issue. **Should maintenance be due on equipment that is out-of service for a protracted period, the required maintenance should only be necessary before the equipment is returned to service. However, you may encounter compliance challenges if you did not complete the maintenance during the scheduled period, and should be prepared to document the out-of-service period and the subsequent maintenance.**		
Southern Company	Yes	Part of the responses could be more correctly stated: Page 11E, "why is specific gravity testing required" The specific gravity measurements do not reflect accurate state of charge for lead-calcium batteries. (Float current is

Organization	Yes or No	Question 7 Comment
		a better parameter for this indication)
Response: The SDT thanks you for your comments concerning specific gravity being required. The SDT has modified the standard by removing the requirement for specific gravity testing.		
FirstEnergy	Yes	Pg. 17 (What forms of evidence are acceptable) Although Measures are not yet developed and posted with the standard, we wanted to point out that the SDT should consider adding these acceptable forms of evidence in the measures of the standard.
Response: The SDT thanks you for your comments. The SDT will consider identifying acceptable forms of evidence when developing the Measures.		
Progress Energy	Yes	Progress Energy is unclear how a new/revised standard can have a 30 page FAQ document associated with it. If questions need to be addressed, the answers should be incorporated into the existing standard. During this stage of the draft, all questions should be addressed, not left to the side in an "interpretation" paper.
Response: The SDT thanks you for your comments. The SDT believes that providing additional references helps clarify the requirements in the standard. The SDT must address the directives of FERC orders 672 and 693 without being too prescriptive within the standard itself. According to the NERC Standard Development Procedure, a standard is to contain only the prescriptive requirements; supporting discussion is to be in a separate document.		
RRI Energy	Yes	Reverse power relays do not belong in the list of devices within the scope of this standard; reverse power is not used for generator protection or protection of a BES element. Aside from the protection of reverse power for other non-BES equipment, a generator can operate continuously as a generator, synchronous condenser, or a synchronous motor. Reverse power relays (or reverse power elements in multi-function relays) is commonly used as a control function for automatic shut-down purposes, which is not a protective function. Other reverse power protection, with longer time delays, is provided for turbine protection, which is not within the scope of the NERC Standards.
Response: The SDT thanks you for your comments. For some power plants, the reverse power relays trip the generation output breaker(s) and thus are in scope per section 4.2.5.1 of the standard. The list of devices provides examples which may or may not be in scope of the standard depending upon how they applied.		
CenterPoint Energy	Yes	See CenterPoint Energy's response to question 6. The need for an FAQ document in addition to an extensive "Supplementary Reference Document" further illustrates the complexity and impracticality of the proposed standard revisions.
Response: The SDT thanks you for your comments. See the response to your comments on Question 6.		

Organization	Yes or No	Question 7 Comment
The SDT believes that providing additional references helps clarify the requirements in the standard. The SDT must address the directives of FERC orders 672 and 693 without being too prescriptive within the standard itself. According to the NERC Standard Development Procedure, a standard is to contain only the prescriptive requirements; supporting discussion is to be in a separate document.		
Oncor Electric Delivery	Yes	The FAQ document is an excellent resource document for Protection System Owners to understand why the maintenance activities listed in the proposed standard were chosen.
Response: The SDT thanks you for your support.		
JEA	Yes	The FAQ is a well written document and the team should take pride in its clarity and informative content. One area that would be good to have further clarification, is if the SDT could provide a current industry product or example of the "software latches or control algorithms, including trip logic processing implemented as programming components, such as a microprocessor relay that takes the place of (conventional) discrete component auxiliary relays or lockout relays that do not have to be routinely tested." Is this a microprocessor lockout relay (that does not require trip testing?)
Response: The SDT thanks you for your support. The description indeed does reflect a microprocessor relay with imbedded lockout relay functions that does not require trip testing for the lockout function. However, the breaker trip coil would still need to be tested as otherwise required in the standard. Because of the NERC Antitrust Policy, the SDT is unable to provide commercial examples.		
Northeast Power Coordinating Council	Yes	The FAQ is helpful in answering many of the obvious questions.
Response: The SDT thanks you for your support.		
Saskatchewan Power Corporation	Yes	The FAQ section is beneficial, but would suggest reviewing it to determine if it can be integrated within the reference document.
Response: The SDT thanks you for your support. The SDT will, to the degree possible, integrate material from the FAQ into the Supplementary Reference Document. The SDT additionally believes that there is value in the FAQ that presents the material as questions and answers.		
Lower Colorado River Authority	Yes	The Frequently-asked Questions document is very well written and very helpful. The decision trees are a good addition.
Response: The SDT thanks you for your support.		

Organization	Yes or No	Question 7 Comment
Xcel Energy	Yes	1. The Frequently-asked Questions seem to act as interpretations to the standard. What roll will they play in determining compliance? 2. On table 1b (page 11) the UFLS and UVLS maintenance activities indicate that tripping of the interrupting device is not required, but it uses the term "functional trip test". The FAQ indicates that a "functional trip test" does require tripping the interrupting device. This conflicts with what is in the table and should be corrected in the FAQ to reflect that no trip is required.
Response: The SDT thanks you for your comments. **1. The FAQ and Supplementary Reference Document are provided as references to present detailed discussions about determination of maintenance intervals and other useful information regarding establishment of a maintenance program, and do not have statutory effect. The SDT believes that these documents provide potentially useful information to the entity in developing and sustaining an effective PRC-005 program, and hopes that these documents will be useful to the entity in establishing support of their program when it is reviewed by the Compliance Enforcement Authority. It is the drafting team's intent that these documents be posted with the standard when approved similarly to the CIP FAQ and the PRC-023 reference document.** **2. The SDT agrees with your comment. See FAQ II-4-E, page 11.**		
Illinois Municipal Electric Agency	Yes	Under "Group by Type of BES Facility", 1. (page 15) "The radial exemption in the BES definition should be clarified to include transmission subsystems within a single municipality, where the transmission facilities serving only subsystem load with one transmission source - essentially operate radially. A more practical application of the radial exemption would address smaller TOs whose system has minimal potential to impact the BES as a whole.
Response: The SDT thanks you for your comments. The BES is a NERC and Regional defined term, and is outside the scope of this drafting team. Requests for clarification regarding the BES definition should be referred to your Regional Entity. It isn't clear to the SDT whether the example you request is appropriate or accurate.		
Duke Energy	Yes	We strongly believe that this document should be made a part of the standard, either as an Attachment or worked into the requirements and tables. This will bring clarity to PRC-005 that is needed to get away from all the past problems that were due to a lack of clarity with the previous PRC-005 standards. Also, all the explanations and guidance lose force if they are not part of the standard. Auditors will only be bound by the standard.
Response: The SDT thanks you for your comments. The SDT must address the directives of FERC orders 672 and 693 without being too prescriptive within the standard itself. The SDT feels that providing additional references helps clarify the requirements in the standard and hopes that these documents will be useful to the entity in establishing support of their program when it is reviewed by the Compliance Enforcement Authority. According to the NERC Standard Development Procedure, a standard is to contain only the prescriptive requirements; supporting discussion is to be in a separate		

Organization	Yes or No	Question 7 Comment
document.		
AECI	Yes	**Group by Type of Maintenance Program:** **2. Time-Based Protection System Maintenance (TBM) Programs** **A. What does this Maintenance standard say about commissioning?** Commissioning tests are regarded as a construction activity, not a maintenance activity. **COMMENT 1:** If we understand the question and answer correctly, we disagree. We believe that the standard should accept commissioning as the first date for the maintenance testing if the commissioning tests correspond to the Standard's TBM testing procedures. Otherwise, maintenance tests on a new substation will be required to be completed (again) based on the Implementation Plan guidelines for PRC-005-02. **Group by Type of Maintenance Program:** **2. Time-Based Protection System Maintenance (TBM) Programs** **C. If I am unable to complete the maintenance as required due to a major natural disaster (hurricane, earthquake, etc.), how will this affect my compliance with this standard.** The NERC Sanction Guidelines provide that the Compliance Monitor will consider extenuating circumstances when considering any sanctions. **COMMENT 2:** We feel that guidelines should be provided for "extenuating circumstances", specifically addressing natural disasters.
Response: The SDT thanks you for your comments. **The FAQ will be reworded to clarify that commission tests can be used to establish initial performance of maintenance as long as the requirements Tables 1a, 1b, & 1c are fulfilled. See FAQ IV-2-B, page 23.** **The SDT believes that "extenuating circumstances" are addressed by the NERC Sanction Guidelines, and are therefore a discretionary issue between the entity and the Compliance Enforcement Authority. Because of the variability in natural disasters and their potential impact on Protection System maintenance programs, it does not seem practical to develop measurable requirements addressing this issue in the context of this standard. Additionally, FERC Order 693 directed that NERC establish maximum maintenance intervals, and allowing for a "grace period" would not conform to this directive. Please refer to Section 8 (page 9) of the Supplementary Reference Document for a discussion on this issue.**		
Puget Sound Energy	Yes	PSE appreciates this document as it provides a lot of further clarity. PSE hopes this document will be updated through by comments and questions provided during the development process. We wonder how this document might be used in an audit as well. What is the formal process for the supplementation reference document to be

Organization	Yes or No	Question 7 Comment
		changed? How will entities be notified?

Response: Thank you for your support.

The FAQ and Supplementary Reference Document are provided as references to present detailed discussions about determination of maintenance intervals and other useful information regarding establishment of a maintenance program, and do not have statutory effect. The SDT believes that these documents provide potentially useful information to the entity in developing and sustaining an effective PRC-005 program, and hopes that these documents will be useful to the entity in establishing support of their program when it is reviewed by the Compliance Enforcement Authority. It is the drafting team's intent that these documents be posted with the standard when approved similarly to the CIP FAQ and the PRC-023 reference document. In order that these documents are initially posted with PRC-005-2 when approved, they must undergo industry comment and review, and the Standards Committee must be convinced through that process that the documents align with the standard and are relevant to the standard. With future revisions to PRC-005, the FAQ and Supplemental Reference Document will have to undergo SDT review and industry comment to remain posted with the standard, and the Standards Committee will have to remain convinced of their accuracy and relevance.

8. If you are aware of any conflicts between the proposed standard and any regulatory function, rule, order, tariff, rate schedule, legislative requirement, or agreement please identify the conflict here.

Summary Consideration: Most respondents were unaware of any conflicts. Some felt that conflicts existed with existing business or Regional practices, or with other organizations such as the Nuclear Regulatory Commission. The SDT provided clarifying explanations to illustrate that conflicts are not actually present.

Organization	Question 8 Comment
ITC Holdings	Comments: We are not aware of any conflicts.
Response: The SDT thanks you for your comments.	
MRO NERC Standards Review Subcommittee	Conflict: Order 672 says that standards should be clear and unambiguous.
Response: The SDT thanks you for your comments. The SDT must address the directives of FERC orders 672 and 693 without being too prescriptive within the standard itself. The SDT believes that providing additional references helps clarify the requirements in the standard. Also, the SDT believes that the level of prescription within the standard is necessary to satisfy the guidance in FERC Order 693, and also to address observations from the Compliance Monitoring entities (the Regional Entities and NERC) that PRC-005-1 is excessively general.	
Lower Colorado River Authority	Conflict: Potential conflict with PRC-023 as to which PRS systems are applicable per this standard. Comments: PRC-005-2 requires compliance for this standard for all non-radial systems over 100 kV; while, PRC-023-1 prescribes it as below: 1. Title: Transmission Relay Loadability2. Number: PRC-023-13. Purpose: Protective relay settings shall not limit transmission loadability; not interfere with system operators' ability to take remedial action to protect system reliability and; be set to reliably detect all fault conditions and protect the electrical network from these faults.4. Applicability: 4.1. Transmission Owners with load-responsive phase protection systems as described in Attachment A, applied to facilities defined below:4.1.1 Transmission lines operated at 200 kV and above.4.1.2 Transmission lines operated at 100 kV to 200 kV as designated by the Planning Coordinator as critical to the reliability of the Bulk Electric System.4.1.3 Transformers with low voltage terminals connected at 200 kV and above.4.1.4 Transformers with low voltage terminals connected at 100 kV to 200 kV as designated by the Planning Coordinator as critical to the reliability of the Bulk Electric System.4.2. Generator Owners with load-responsive phase protection systems as described in Attachment A, applied to facilities defined in 4.1.1 through 4.1.4.4.3. Distribution Providers with load-responsive phase protection systems as described in Attachment A, applied according to facilities defined in 4.1.1 through 4.1.4., provided that those facilities have bi-directional flow capabilities.4.4. Planning Coordinators. We believe Bulk Electric System (BES) owners resources would be better utilized by focusing on relay systems as defined in

Organization	Question 8 Comment
	the above PRC-023-1 and this would still provide high level of reliability for the BES, since not all facilities operating between 100 200KV are critical to the BES. This would not preclude any utilities from applying this standard to other facilities operating at the lower voltage range. Why did the drafting team not use the application language sited in the "Protection System Maintenance - A NERC Technical Reference" which is similar to what is described above from PRC-023-1?
Response: The SDT thanks you for your comments. The Energy Policy Act of 2005, as well as various FERC orders and the NERC Standards Development Process requires that reliability standards should be applicable to the BES (or, in the case of the Energy Policy Act, the BPS, which is almost synonymous). In the case of PRC-023-1, cited in the comment, that SDT as well as the NERC Staff was required to carefully explain why this standard was not specifically applicable to the BES, but instead to a subset of the BES. The 2007-17 SDT has determined that a similar rationale cannot be effectively determined for PRC-005-2, and thus specified that it should be applicable to the BES. It is noted that this applicability is similar to the applicability for PRC-005-1.	
Exelon Generation Company, LLC	Conflict 1. Nuclear generators are licensed to operate and regulated by the Nuclear Regulatory Commission (NRC). Each licensee operates in accordance with plant specific Technical Specifications (TSs) issued by the NRC. TS allow for a 25% grace period may be applied to TS Surveillance Requirements (SRs). Referencing NRC issued NUREGs for Standard Issued Technical Specifications (NUREG-143 through NUREG-1434) Section 3.0, "Surveillance Requirement (SR) Applicability, SR 3.02 states the following:" The specified Frequency for each SR is met if the Surveillance is performed within 1.25 times the interval specified in the Frequency, as measured from the previous performance or as measured from the time a specified condition of the Frequency is met." 2. Battery Charger Testing 2a. All conditions (grounds, voltages etc) should be compared to "acceptable limits" as specified in nuclear station design basis documents, industry standards or vendor data. 2b. IEEE 450 does not use the word "proper" as utilized in Table 1a (e.g., "record voltage of each cell v/s verify proper voltage of each individual cell.") 3. The NRC Maintenance Rule (10 CFR 50.65) requires monitoring the effectiveness of maintenance to ensure reliable operation of equipment within the scope of the Rule. Adjustments are made to the PM (preventative maintenance) program based on equipment performance. The Maintenance Rule program should provide an acceptable level of reliability and availability for equipment within its scope. Comments: 4. All maintenance activities should include a "grace" period to allow for changes to a nuclear generator's refueling schedule and emergent conditions that would prevent the safe isolation of equipment and/or testing of function. "Grace" periods align with currently implemented nuclear generator's maintenance and testing programs.

Organization	Question 8 Comment
	5. The 3-month maximum interval should be extended to include a grace period to ensure that a 25% grace period is included to align with current nuclear templates that implement NRC TS SRs are documented in the response to Question 8.

Response: The SDT thanks you for your comments.

1. The SDT considered this issue when developing the intervals, and realizes that some entities may need to perform certain maintenance activities more frequently to assure that the activities are performed within the required intervals. Specifically, for generation facilities, there would seem to be numerous opportunities within the 6-year or longer intervals to perform the required maintenance during a scheduled plant outage, and maintenance with shorter intervals can be characterized as non-intrusive maintenance, more of an inspection than anything else; the SDT believes that this maintenance can be done on-line. The SDT is concerned that a "grace period", if permitted, would be used to establish a de-facto longer interval, and that the established intervals would thus not be measurable. Additionally, FERC Order 693 directed that NERC establish maximum maintenance intervals, and allowing for a "grace period" would not conform to this directive. Please refer to Section 8 of the Supplementary Reference Document (page 9) for a discussion on this issue.

2a. The SDT agrees that each entity establishes its own "acceptable limits". In this case, "acceptable limits" would seem to be determined in the materials cited, and would apply for PRC-005-2.

2b. The SDT agrees. The SDT modified the standard to address your concerns. The revised maintenance activity now reads: Inspect cell condition of individual battery cells where cells are visible, or measure battery cell/unit internal ohmic values where cells are not visible.

3. The entity must satisfy all applicable requirements (in this case, NERC PRC-005-2 and the NRC 10 CFR 50.65) as they apply to common equipment. Since the NRC requires monitoring of the effectiveness of the program, you must do so even if this isn't in the NERC standard.

4. The SDT considered this issue when developing the intervals, and realizes that some entities may need to perform certain maintenance activities more frequently to assure that the activities are performed within the required intervals. Specifically, for generation facilities, there would seem to be numerous opportunities within the 6-year or longer intervals to perform the required maintenance during a scheduled plant outage, and maintenance with shorter intervals can be characterized as non-intrusive maintenance, more of an inspection than anything else; the SDT believes that this maintenance can be done on-line. The SDT is concerned that a "grace period", if permitted, would be used to establish a de-facto longer interval, and that the established intervals would thus not be measurable. Additionally, FERC Order 693 directed that NERC establish maximum maintenance intervals, and allowing for a "grace period" would not conform to this directive. Please refer to Section 8 of the Supplementary Reference Document (page 9) for a discussion on this issue.

5. The SDT considered this issue when developing the intervals, and realizes that some entities may need to perform certain maintenance activities more frequently to assure that the activities are performed within the required intervals. Specifically, for generation facilities, there would seem to be numerous opportunities within the 6-year or longer intervals to perform the required maintenance during a scheduled plant outage, and maintenance with shorter intervals can be characterized as non-intrusive maintenance, more of an inspection than anything else; the SDT believes that this maintenance can be done on-line. The SDT is concerned that a "grace period", if permitted, would be used to establish a de-facto longer interval, and that the established intervals would thus not be measurable. Additionally, FERC Order 693 directed that NERC establish maximum maintenance intervals, and allowing for a "grace period" would not conform to this directive. Please refer to Section 8 (page 9) of the Supplementary Reference Document for a

Organization	Question 8 Comment
discussion on this issue.	
City Utilities of Springfield, MO	CU is unaware of any conflicts.
Response: The SDT thanks you for your comments.	
Florida Municipal Power Agency, and its Member Cities	FMPA is not aware of any conflicts
Response: The SDT thanks you for your comments.	
Green Country Energy LLC	It would be beneficial to include some administrative (man hour) and cost estimates to comply with this and any future proposed standards so if major budget impacts could be addressed.
Response: The SDT thanks you for your comments. The SDT is unable to assess the costs of any specific entity to comply with this standard, as the SDT is not aware of the degree to which that entity's current program would satisfy the requirements of this standard. Additionally, "man-hours" would vary widely with the size of the entity.	
Operations and Maintenance	No conflicts known.
AEP	No known conflicts.
Duke Energy	None
Electric Market Policy	None
Nebraska Public Power District	None
PacifiCorp	None known.
SERC (PCS)	None known.
Ontario Power Generation	Not aware of any
Georgia System Operations	Not aware of any.

Organization	Question 8 Comment
Corporation	
American Transmission Company	Order 672 says that standards should be clear and unambiguous. This proposed standard is very complex. While the standard allows entities to select the appropriate maintenance strategy (time based, performance based or conditioned based) for their system the amount of data and tracking required to demonstrate compliance will be overwhelming.
Response: The SDT thanks you for your comments. At its simplest, using time-based maintenance and Table 1a, the documentation requirements should not be vastly different than those to prove compliance to PRC-005-1 for a strong compliance program. If more advanced strategies are used, documentation requirements to demonstrate compliance may very well increase. **The SDT believes that it has clearly and unambiguously defined the minimum activities and maximum intervals necessary to implement an effective PSMP, and presented advanced strategies for those entities who wish to utilize them.**	
Indianapolis Power & Light Co.	Performing some of the maintenance activities may cause conflict with regional ISOs and their safe operation of the BES
Response: The SDT thanks you for your comments. To minimize system impact of such maintenance, the maintenance necessarily should be scheduled at a time that minimizes the risks.	
Northeast Power Coordinating Council	Yes--NPCC Directory #3, NPCC Key Facility Maintenance Tables. All areas must implement changes at the same time.
Response: The SDT thanks you for your comments. PRC-005-2 is a NERC standard and as such it will have its own implementation plan. PRC-005-2 when implemented will be an ERO-wide standard which establishes minimum requirements; to the degree that these requirements are more stringent than those currently imposed by any individual Regional Entity, the NERC requirements will govern. Any individual Regional Entity can establish MORE stringent requirements.	
Puget Sound Energy	PRC-STD-005 PRC-005-2 requires a Protection System Maintenance Program (PSMP) while PRC-STD-005 requires a Transmission Maintenance and Inspection Plan (TMIP). Historically the requirements of PRC-005-1 and PRC-STD-005 folded nicely into one consistent plan. Could the maximum intervals identified in PRC-005-2 be expected or audited against under PRC-STD-005 where it does not indicated that much specificity? PRC-STD-005 requires maintenance of lines and breakers over and above what PRC-005-2 the expectations relative to breakers should align.
Response: The SDT thanks you for your comments. An entity can be audited to both NERC Reliability Standards and to Regional Standards, provided that both are mandatory and enforceable. Where applicable, Regional Standards will have more stringent requirements. As for intervals, where different intervals apply to the same piece of equipment, the more stringent intervals apply. Also, the NERC intervals would apply only to the equipment	

Organization	Question 8 Comment
	associated with those intervals within the NERC Standard. If the Regional requirements address equipment not addressed within the NERC Standard, only the Regional requirements are relevant.

9. If you are aware of the need for a regional variance or business practice that we should consider with this project, please identify it here.

Summary Consideration: A number of respondents suggested that the standard should allow "grace periods" to defer maintenance because of a variety of expected difficulties in completing the required activities within the established intervals. The SDT consistently responded that a "grace period" would be contrary to a measurable standard, and that entities should manage their programs to assure that the required activities are completed on schedule.

Organization	Regional Variance or Business Practice	Question 9 Comment
TVA	Business Practice	Allow for deferrals to coordinate with generator outages.
Response: The SDT thanks you for your comments. The SDT considered this issue when developing the intervals, and realizes that some entities may need to perform certain maintenance activities more frequently to assure that the activities are performed within the required intervals. Specifically, for generation facilities, there would seem to be numerous opportunities within the 6-year or longer intervals to perform the required maintenance during a scheduled plant outage, and maintenance with shorter intervals can be characterized as non-intrusive maintenance, more of an inspection than anything else; the SDT believes that this maintenance can be done on-line. The SDT is concerned that a "grace period", if permitted, would be used to establish a de-facto longer interval, and that the established intervals would thus not be measurable. Additionally, FERC Order 693 directed that NERC establish maximum maintenance intervals, and allowing for a "grace period" would not conform to this directive. Please refer to Section 8 of the Supplementary Reference Document (page 9) for a discussion on this issue.		
Exelon Generation Company, LLC	Business Practice	Business Practice: Nuclear Electric Insurance Limited (NEIL) variance allowance.
Response: The SDT thanks you for your comments. The SDT considered this issue when developing the intervals, and realizes that some entities may need to perform certain maintenance activities more frequently to assure that the activities are performed within the required intervals. Specifically, for generation facilities, there would seem to be numerous opportunities within the 6-year or longer intervals to perform the required maintenance during a scheduled plant outage, and maintenance with shorter intervals can be characterized as non-intrusive maintenance, more of an inspection than anything else; the SDT believes that this maintenance can be done on-line. The SDT is concerned that a "grace period", if permitted, would be used to establish a de-facto longer interval, and that the established intervals would thus not be measurable. Additionally, FERC Order 693 directed that NERC establish maximum maintenance intervals, and allowing for a "grace period" would not conform to this directive. Please refer to Section 8 of the Supplementary Reference Document (page 9) for a discussion on this issue.		
ITC Holdings		Comment: We are not aware of any regional variance or business practice that should be considered

Organization	Regional Variance or Business Practice	Question 9 Comment
		with this project.
Response: The SDT thanks you for your comment.		
Green Country Energy LLC	Business Practice	Contractual commitments existing prior to NERC stds make it difficult to comply with some of the maintenance activities.
Response: The SDT thanks you for your comment. Existing contracts may need to be adjusted to accommodate compliance to NERC standards.		
City Utilities of Springfield, MO		CU is not aware of a need for a regional variance.
Response: The SDT thanks you for your comment.		
Florida Municipal Power Agency, and its Member Cities		FMPA is not aware of a need for a regional variance
Response: The SDT thanks you for your comment.		
Electric Market Policy	Regional Variance	1. It is our understanding that once Project 2009-17: "Interpretation of PRC-004-1 and PRC-005-1 for Y-W Electric and Tri-State" is approved, that the definition of a "Transmission Protection System" would be included within PRC-005-2 or included within the NERC Glossary of Terms. However, the specific protection that would be considered part of the "Transmission Protection System" would also depend on the regional definition of the BES. 2. We suggest that the regions develop a supplement that provides further clarification on what constitutes a "Transmission Protection System" given the regional definition of the BES.
Response: The SDT thanks you for your comments. **1. The 2009-17 interpretation addresses PRC-005-1. The SDT will monitor this interpretation to determine if any changes need to be made to PRC-005-2 in response to this interpretation. In general, a definition cannot be established via the Interpretation process, but only through the comprehensive Standards Development process.** **2. You should present this concern to your region.**		
SERC (PCS)	Regional Variance	1, It is our understanding that once Project 2009-17: "Interpretation of PRC-004-1 and PRC-005-1 for

Organization	Regional Variance or Business Practice	Question 9 Comment
		Y-W Electric and Tri-State" is approved, that the definition of a "Transmission Protection System" would be included within PRC-005-2 or included within the NERC Glossary of Terms. However, the specific protection that would be considered part of the "Transmission Protection System" would also depend on the regional definition of the BES. 2. We suggest that the regions develop a supplement that provides further clarification on what constitutes a "Transmission Protection System" given the regional definition of the BES.
Response: The SDT thanks you for your comments. **1. The 2009-17 interpretation addresses PRC-005-1. The SDT will monitor this interpretation to determine if any changes need to be made to PRC-005-2 in response to this interpretation. In general, a definition cannot be established via the Interpretation process, but only through the comprehensive Standards Development process.** **2. You should present this concern to your region.**		
American Transmission Company	Business Practice	Jointly-owned facilities should be a component of this standard. Comments: ATC shares services at Substations; consider dividing the services, i.e. batteries and PTs.
Response: The SDT thanks you for your comments. This is a registration issue and it's not within the scope of the SDT. If a company owns a facility that meets the applicability section as described in this standard then it is responsible for the maintenance activities as described in this standard.		
Ontario Power Generation	Regional Variance	Maintenance activities, and especially intervals, prescribed in NPCC Directory 3 (Maintenance Criteria for BPS Protection) often differ from those in PRC 005 - 02. We recommend that NPCC aligns Directory #3 with PRC 005 - 02 as much as possible. Technical justification should be provided for any variance.
Response: The SDT thanks you for your comments. Any Regional Entity may develop its own requirements, as long as they are not less stringent than the NERC requirements. **The SDT suggests that the commenter communicate with the NPCC regional staff regarding this concern.**		
AEP		No none regional or business practice variances known.
Nebraska Public Power District		None
PacifiCorp		None known.

Organization	Regional Variance or Business Practice	Question 9 Comment
Georgia System Operations Corporation		None.
Operations and Maintenance		None.
Northeast Power Coordinating Council		Not aware of any regional variance or business practice.
Response: The SDT thanks you for your comment.		
JEA	Regional Variance	Regional variances in the Bulk Electric System definition as applied across regions allows for PSMP to vary possibly even for the same region crossing tie lines. Also, accepted maintenance practices by one region vary from accepted maintenance practices from another region. In the case of lower kV non-redundant bus lockout protection systems, one region may allow for the protection system to be taken out of service to perform maintenance, while another region may specifically prohibit this practice (don't leave energized equipment protected by delayed clearing, etc.)
Response: The SDT thanks you for your comment.		
Duke Energy	Regional Variance	Regions with ISO's and RTO's - Where the independent system operator (ISO) is not the same company as the entity doing testing and maintenance, the independent system operator could prevent the entity from performing scheduled maintenance and testing due to outage request constraints. There should be no violation in such a situation, and the maintenance and testing just rescheduled.
Response: The SDT thanks you for your comments. **The SDT considered this issue when developing the intervals, and realizes that some entities may need to perform certain maintenance activities more frequently to assure that the activities are performed within the required intervals. The SDT is concerned that a "grace period", if permitted, would be used to establish a de-facto longer interval, and that the established intervals would thus not be measurable. Additionally, FERC Order 693 directed that NERC establish maximum maintenance intervals, and allowing for a "grace period" would not conform to this directive. Please refer to Section 8 (page 9) of the Supplementary Reference Document for a discussion on this issue.**		
Wisconsin Electric	Regional Variance	See above Question 2, Item 7: There needs to be some recognition that Protection System's applied on distribution-voltage systems may be included in a regional definition of a BES Protection System. These systems are not designed or operated in the same way as Transmission or Generation

Organization	Regional Variance or Business Practice	Question 9 Comment
		Protection Systems. Therefore, it is reasonable that these systems be subject to less rigorous requirements.
Response: The SDT thanks you for your comments. See our response above to Question #2, item 7.		

10. If you have any other comments on this standard that you have not already provided in response to the prior questions, please provide them here.

Summary Consideration: This question generated numerous comments and many respondents repeated comments offered earlier in the document. Several of the respondents objected to the establishment of maximum allowable intervals at all, and suggested that it should be left to the entities to establish their own intervals; the SDT explained that this would be directly contrary to FERC directives related to the four current standards which are being addressed within this project. Additional technical comments covered the full spectrum of the material in the standard and associated reference documents, and resulted in extensive changes to the standard and in changes to both the Supplementary Reference (mostly to correct inconsistencies) and to the FAQ (including addition of many additional topics). There was also concern about the documentation necessary to demonstrate compliance.

Organization	Question 10 Comment
Ameren	1) Documentation could be a monumental task. Although FAQ 1B allows a comprehensive set of forms of documentation, a very large number of people are involved across this set at most utilities. Producing a particular needle in the haystack may take longer than an auditor would expect. Inspection forms can be structured to capture abnormal conditions, and thus normal conditions are not recorded. Some items, like the red light monitoring a trip coil, may only be reported by exception (i.e., "red light out, replaced bulb" but if the red light is on an operator may not report that). 2) We presume that the SDT would expect transmission facilities to be switched out of service if maintenance would result in those facilities being unprotected. We think this should be stated or clarified, as there may be entities that still use differential cutoff switches or other means of disabling protection for testing and have not considered the consequences of a concurrent fault.
Response: The SDT thanks you for your comments. **1. Much of your concern can be addressed within your program by careful design of your maintenance tracking forms and systems. In your example of a red light, your maintenance can include documentation forms that require completion of either of multiple choices (e.g., OK, Not OK with resolution, etc).** **2. This consideration relates to general planning, design, and operational issues, and is outside the scope of this standard. Various other NERC standards apply.**	
Public Service Enterprise Group Companies	1) R4 requires all maintenance correctable issues identified as part of a time based maintenance plan to be resolved in that same maintenance period. This places a burden on some items (for example, 3 month battery inspections) to achieve adequate resolution for problems that are not an immediate threat. For example, if a battery with a somewhat out of allowable range specific gravity is found near the end of the maintenance period, scheduling and performing the work to replace the battery could reasonably extend somewhat beyond the end of maintenance period. PSE&G requests that the drafting team revisit this

Organization	Question 10 Comment
	requirement and allow flexibility for corrections to be made within a specified reasonable timeframe when correctible issues are identified that for practical reasons require extension for work completion beyond the end of the current maintenance interval. 2) Section 4.2.5.5 of the standard should define provide an example that just the transformer connected to the BES is included and specifically exclude connected equipment beyond the LV terminals. 3) Draft implementation plan for requirements R2, R3 & R4 discusses table 1a as basis, should also address tables 1b and 1c.
Response: The SDT thanks you for your comments. **1. Requirement R4, Part4.3 has been added to the standard in consideration of your comments. It reads as follows:** R4. Each Transmission Owner, Generator Owner, and Distribution Provider shall implement its PSMP, including identification of the resolution of all maintenance correctable issues[2] as follows: *[Violation Risk Factor: Medium] [Time Horizon: Long Term Planning]* 4.3 Assure either that the components are within acceptable parameters at the conclusion of the maintenance activities or initiate any necessary activities to correct unresolved maintenance correctable issues[3]. **2. The SDT disagrees with your comment. For example, current transformers on low-voltage transformer bushings or low-voltage breakers, which are associated with differential relays, must be considered within application of PRC-005-2. See Figure 2 in the Supplemental Reference Document (page 28) for an illustration.** **3. The SDT believes that the implementation period for PRC-005-2 must be kept as brief as possible; until PRC-005-2 is fully implemented, entities will have to be compliant with PRC-005-2 for those components for which implementation has been completed, and with PRC-005-1 for all other components. However, entities may need considerable time to become compliant with the more specific requirements of PRC-005-2. An implementation period based on Table 1a seems to be the best compromise period to achieve this. Additionally, the Implementation Plan does not require that entities adopt the Table 1a activities and intervals, but instead just refers to the Table 1a components and their intervals for establishment of a phased implementation.**	
Wisconsin Electric	1. In the definition of a Protection System Maintenance Program, the statement is made that "A maintenance program CAN include..." with a list of seven attributes following. Is it the intent that the PSMP "SHALL include one or more of the following"? What is to prevent Compliance staff from concluding that all seven of these attributes MUST be included in the PSMP? 2. The standard should more clearly describe what is meant by "verify..." when used in a Maintenance Activity description. Does

[2] A maintenance correctable issue is a failure of a device to operate within design parameters that can not be restored to functional order by repair or calibration while performing the initial on-site maintenance activity, and that requires follow-up corrective action

[3] A maintenance correctable issue is a failure of a device to operate within design parameters that can not be restored to functional order by repair or calibration while performing the initial on-site maintenance activity and that requires follow-up corrective action.

Organization	Question 10 Comment
	this require actual paper or electronic documentation? If so, then this should be explicitly stated in the Maintenance Activity description. We maintain above that the recurring and routine maintenance activities having a 3 month interval should be revised to use alternate words such as "Check" or "Observe". For example, "Check the continuity of the breaker trip circuit...", or "Observe the voltage of the station battery". This activity should not be required to have paper or electronic documentation or evidence. It should be sufficient to have these activities included in the PSMP. 3. It is stated in the Supplementary Reference that actual event data from fault records may be used to satisfy certain Maintenance Activities, yet the standard itself does not appear to allow for this. Will such evidence be accepted by Compliance staff?
Response: The SDT thanks you for your comments. **1. Yes, a PSMP should include one or more of the listed activities for any specific component. The definition is intended to identify the possible attributes of a PSMP. Only those attributes relevant to a specific program and component need be included in the PSMP for that component. The proposed definition includes the following phrase, making it clear that the PSMP does not have to include all listed items,** "A maintenance program for a specific component includes one or more of the following activities:" **2. The SDT thanks you for your comments and has modified the standard in consideration of your comments.** **3. It is difficult to predict what will be accepted by Compliance staff; the SDT believes that you will need to establish a method to capture the evidentiary data from fault records (such as what is empirically verified, when, and how) within your maintenance records. See FAQ IV-1-B (page 21), FAQ II-3-B (page 9) and Section 11 (page 18) of the Supplemental Reference Document.**	
Bonneville Power Administration	1. Tables 1a, 1b, and 1c were cumbersome to use because we found ourselves flipping back and forth to compare the requirements for the different levels of monitoring. Also, in some cases, the types of components were slightly different between the tables, which created confusion. We believe that it would be much easier to decipher a single table that listed each type of component only once and showed the requirements and maintenance intervals for the different levels of monitoring on a single page. Even if it took an entire page for each component, it would be very useful to see all of the options for that component without having to flip back and forth between tables. 2. Please clarify the requirements for trip coils. Table 1a has as a component type "breaker trip coil only", with a maximum maintenance interval of 3 months, while Table 1b has as a component type "trip coils and auxiliary relays". Table 1b say that there are no monitoring attributes for this component and to use the level 1 intervals, but then gives a maximum maintenance interval of 6 years, which doesn't agree with the 3 month interval given in Table 1a. 3. The terminology used to describe the secondary currents and voltages provided to the relay is confusing. Under the modified definition of a protection system, it includes the term "voltage and current sensing inputs to protective relays", and in the tables it uses the term "current and voltage circuit inputs". These terms, especially the use of the word input, give the impression that the actual input circuitry of the protective relay is what is being described, but we believe that these terms are really meant to describe the secondary currents and voltages from the instrument transformers (or other devices). BPA suggests revising the terminology

Organization	Question 10 Comment
	to describe the secondary currents and voltages. For example, in the maintenance activities section of the tables, you could say, "Verify that the secondary current and voltages provided to the relay are correct". 4. There is no mention to what the thresholds are when performing these maintenance activities or what corrective actions must take place and by when they need to be carried out. Is this something we should expect to see soon? 5. The need to measure the cell/unit internal ohmic value every 18 months can be argued. BPA's Substation Maintenance crew performs these measurements once every 24 months and with the Operators monthly inspections, we have been able to effectively catch any problems before a severe event/failure. 6. Communications: It is not clear specifically what equipment is included in "communications". The test interval of 12 years in table 1b is too long to verify continued proper operation of transfer trip tone equipment. Monitoring the presence of the channel does not provide any indication of whether the equipment can initiate a trip. Consequently, a required minimum interval of 12 calendar years is too long and does not do anything to verify proper communications support of the relay scheme. A shorter interval of 6 years, such as that in table 1a makes more sense from a functionality standpoint.
Response: The SDT thanks you for your comments. **1. The SDT has experimented with various arrangements of the Tables with some input from external parties, and feels that the presentation shown in the standard is the best way to present this complex information. To the degree possible, the SDT has attempted to make the arrangement of the three tables as similar as possible to address your concern.** **2. The cited sections of Table 1a, Table 1b, and Table 1c have been extensively revised.** **3. The SDT modified the standard to address your comments by revising the description of these components within the tables and by modifying the Protection System definition.** **4. Note 1 to Table 1a, Table 1b, and Table 1c specify, "adjustment is required to bring measurement accuracy within parameters established by the asset owner based on the specific application of the component." Clause R4.3 has been added to the standard to require that the entity "initiate any necessary activities to correct unresolved maintenance correctible issue." Because corrective actions will vary widely in type and scope, it is difficult to specify when it must take place; simple corrective actions may occur rapidly, but highly involved actions may take an extended period to complete.** **5. Thank you for your comments concerning the evaluation of cell/unit internal ohmic values to the station base line at the Maximum Maintenance Interval in Table 1. Because trending is an important element of ohmic measurement evaluation, the SDT believes that extending the Maximum Maintenance Interval listed in Table 1 for evaluating internal ohmic values would not provide the necessary information for proper evaluation of the ability of the station battery to perform as designed.** **6. The SDT has defined the minimum activities and the maximum intervals necessary to implement an effective PSMP. Some entities may feel that they need to maintain Protective System components more frequently.**	
Exelon Generation Company,	1. Battery testing should be added to Table 1c for Station dc supply (that uses a battery and charger)

Organization	Question 10 Comment
LLC	2. Table 1c Condition based maintenance. Consider adding Battery Capacity Test on a 6-year interval regardless of other condition based maintenance performed. 3. Evaluating the measured cell/unit internal ohmic values to station battery baseline does not provide an evaluation of battery capacity please explain rational for maintenance activity. 4. If the Table 1a maintenance interval is reached and the entity is unable to perform the maintenance task, is it acceptable to install temporary external monitoring or other measures to defer the maintenance to Table 1b or Table 1c interval? Is it acceptable in Table 1b to substitute additional or augmented maintenance activities or operator rounds to extend intervals? 5. Table 1c for equipment with "continuous monitoring" states the maximum maintenance interval of "continuous" this does not seem correct wording consider revising to state "not required." 6. The NERC standard should be revised to include a specific allowance for a deferral or variances of a maintenance activity based on a formal technical evaluation. Nuclear generating units allow for deferrals and/or variances on certain equipment based on emergent conditions that would prevent safe isolation and/or testing of function. It should be noted that any deferrals and/or variances if justified are to be based on a formal evaluation and not based on work management or resource issues. 7. The maintenance intervals and maintenance activities should be referenced directly to a basis document to ensure guidelines have a specific technical basis (e.g., IEEE-450).

Response: The SDT thanks you for your comments.

1. The SDT has modified the standard in consideration of your comments concerning Table 1c. Within Draft 2 of the standard, testing of the battery is not required if all performance attributes of the battery are monitored.

2. The SDT has modified the standard in consideration of your comments concerning Table 1c and the need for testing to verify that the battery can perform as designed.

3. The SDT believes that this Maintenance Activity is a viable alternative that a Vented Lead-Acid or Valve-Regulated Lead Acid battery owner can perform at the Maximum Maintenance Interval of Table 1 in place of conducting a capacity test. See FAQ II-5-F (page 14) and FAQ II-5-G (page 14).

4. R2 of the standard establishes that the entity "ensure the components to which the condition-based criteria are applied (as specified in Tables 1b or 1c), possess the necessary monitoring attributes." It appears irrelevant as to when the monitoring system is installed within the Table 1a monitoring interval, as long as the monitoring satisfies the attributes established in Table 1b or Table 1c as appropriate. If operator rounds, etc, are performed to the intervals established within the Table 1b general requirements, address the monitoring attributes specified within the Table, and are appropriately documented, they meet the requirements. However, it seems to the SDT that any temporary monitoring, etc, will have to be in place BEFORE you are overdue on maintenance and therefore out of compliance.

5. The Maintenance Activities describe that maintenance is actually being performed continuously via the monitoring system. Stating "continuous" for the interval provides a valuable link to FERC Order 693, which directs NERC to establish maximum maintenance intervals.

Organization	Question 10 Comment
6. The SDT considered this issue when developing the intervals, and realizes that some entities may need to perform certain maintenance activities more frequently to assure that the activities are performed within the required intervals. Specifically, for generation facilities, there would seem to be numerous opportunities within the 6-year or longer intervals to perform the required maintenance during a scheduled plant outage, and maintenance with shorter intervals can be characterized as non-intrusive maintenance, more of an inspection than anything else; the SDT believes that this maintenance can be done on-line. The SDT is concerned that a "grace period", if permitted, would be used to establish a de-facto longer interval, and that the established intervals would thus not be measurable. Additionally, FERC Order 693 directed that NERC establish maximum maintenance intervals, and allowing for a "grace period" would not conform to this directive. Please refer to Section 8 of the Supplementary Reference Document (page 9) for a discussion on this issue. **7. IEEE Standards are voluntary unless they are adopted by an "authority having jurisdiction', thus the IEEE Standards could be adopted here in their entirety. However, they would require consistent and continual review by NERC to assure that they are, and continue to be, relevant. The SDT elected instead to use them as a source of material, and to include the relevant required tests within the NERC Standard.**	
FirstEnergy	1. BES reclosing schemes were recently questioned in a PRC-005-1 interpretation but there is no mention of reclosing schemes in the draft standard. This interpretation should be integrated into the requirements of PRC-005-2. 2. Lack of Exception Process - The standard as written does not reflect the fact that any one group, such as a TO performing maintenance on a BES, does not have full control over when an outage can be taken to perform maintenance activities. Especially regarding functional testing, where the equipment needs to be exercised resulting in some BES components being de-energized, it can be very difficult in certain parts of the T&D system to obtain the necessary outage to complete these tasks. Even with proper planning, changes in system conditions and unforeseen equipment problems in other areas can impact the ability to schedule an equipment outage appropriately. Accordingly, a TO can be penalized for not completing prescribed maintenance within prescribed limits due to factors outside of their control. This type of scenario has already been experienced where maintenance activities are scheduled upwards of a year in advance, and then inclement weather or system conditions outside of a TO's service territory (e.g. unanticipated generating unit shutdown) prevent the work from taking place. 3. The standard should provide some specific guidance to allow relief for such situations, or that properly incents or even requires independent system operators (ISOs) and other outside groups to also ensure maintenance is completed within prescribed intervals. If a TO properly considers factors such as weather (not scheduling critical outage during middle of summer), resource commitment, schedule (the requested outage window is at least one year before maximum interval is met), time of day (performing work during afterhours period when load is down) etc. then if outages are still denied, that the TO is not penalized for being out of compliance as maximum intervals are exceeded. This suggested "exception process" should provide requirements for all parties involved, both those performing the maintenance as well as those controlling and overseeing the system. There should be required documentation to prove that the parties on both sides made proper efforts to complete the required maintenance, as well as discuss conflict resolution. 4. With regard to the phrase "including identification of the resolution of all maintenance correctible issues" in Req. R4, we feel that this requirement should be a subset of R4 since it is part of the implementation of the PSMP. We suggest removing the phrase from the main requirement of R4 and creating a new 4.3 as follows:"4.3. For all maintenance programs, identify resolutions for all encountered maintenance correctible issues and take corrective action within a time period suitable for maintaining reliability

Organization	Question 10 Comment
	of the affected protection system." 5. With regard to the proposed modification of "Protection System", we suggest adding the word "devices" after "voltage and current sensing". This would also match what appears to be the SDT's intended wording as shown in the Supplementary Reference Document sec. 2.2. Also, we suggest modifications to the proposed definition to add clarity to the types of communications system protection and the voltage and current sensing devices. The following is our suggestion for wording of the definition:"Protective relays, communication systems used in communications aided (or pilot) protection, voltage and current sensing devices and their secondary circuits to protective relays, station DC supply, and DC control circuitry from the station DC supply through the trip coil(s) of the circuit breakers or other interrupting devices." 6. Protection System Communication Equipment and Channels - Some power line carrier equipment has automatic testing and remote alarming and some that does not. For other relay communication schemes (e.g., tone transfer trip ckts), if the circuit travels over our private communications network (fiber or microwave radio), the communication equipment is remotely monitored/alarmed. In other cases it is not remote monitored. We ask for clarification as follows: As part of our maintenance program, we check that signal level, reflected power, and data error rate are all within tolerance at the interface between the end equipment and the communication link. Our question is: Does this meet the intent of the proposed requirements in PRC-005-2 for maintenance activities for Protection System Communication Equipment and Channels? Or do the requirements ask for something beyond this? 7. We suggest combining 4.2.2, 4.2.3 and 4.2.4 to read as a new 4.2.2 "Protection System components which are installed as an underfrequency load shedding, under voltage load shedding or Special Protection System for BES reliability."

Response: The SDT thanks you for your comments.

1. The SDT is required to include/adopt material from approved interpretations within the standard. In the case of reclosing relays, the referenced interpretation stated that reclosing relays are NOT included, and the draft standard excludes them.

2. The SDT considered this issue when developing the intervals, and realizes that some entities may need to perform certain maintenance activities more frequently to assure that the activities are performed within the required intervals. The SDT is concerned that a "grace period", if permitted, would be used to establish a de-facto longer interval, and that the established intervals would thus not be measurable. Additionally, FERC Order 693 directed that NERC establish maximum maintenance intervals, and allowing for a "grace period" would not conform to this directive. Please refer to Section 8 of the Supplementary Reference Document (page 9) for a discussion on this issue.

3. The SDT considered this issue when developing the intervals, and realizes that some entities may need to perform certain maintenance activities more frequently to assure that the activities are performed within the required intervals. The SDT is concerned that a "grace period", if permitted, would be used to establish a de-facto longer interval, and that the established intervals would thus not be measurable. Additionally, FERC Order 693 directed that NERC establish maximum maintenance intervals, and allowing for a "grace period" would not conform to this directive. Please refer to Section 8 (page 9) of the Supplementary Reference Document for a discussion on this issue

4. The SDT has modified the standard in consideration of your comment. Requirement R4, Part 4.3 was added and now reads: Assure either that the

Organization	Question 10 Comment
components are within acceptable parameters at the conclusion of the maintenance activities or initiate any necessary activities to correct unresolved maintenance correctable issues[4]. **5. The SDT believes that your suggestions regarding the Protection System definition may address predominant current technology relatively accurately, but may be constraining with regards to emerging technologies.** **6. If there is remote monitoring of the Channel, then Level 2 requirements indicate a 12 calendar year interval for the tests you describe. If the system is unmonitored a manual check back or a check of the automated check back is required at a 3 month interval. Unmonitored systems would also have the signal level, reflected power and data error rate check done on a 6 year interval.** **7. The SDT elected to list these components within separate subrequirements in order to maintain linkage to the legacy PRC-008, PRC-011, and PRC-017 standards. Your suggestion may be better adopted in a future revision of this standard (following approval of PRC-005-2).**	
Dynegy	1. The proposed definition of Protection System needs further clarification. Suggest changing wording around DC supply to read as follows: "...and DC control circuitry associated with protective devices from the station DC supply". 2. Suggest revising Section 4.2 to separate time based program as its own item under R4.3. 3. Change title on Table 1a to clarify level 1 monitoring as time based.
Response: The SDT thanks you for your comments. **1. The SDT has modified the standard in consideration of your comment. The following phrase was added to the definition:** and associated circuitry from the voltage and current sensing devices **2. R4.1 currently addresses implementation of maintenance programs per Table 1a, Table 1b, and Table 1c as different "flavors" of a time-based program, depending on the degree of monitoring present for the various components. The SDT feels that this is the correct approach. R4.2 specifically addresses performance-based maintenance, and does not seem relevant to the text of your comment.** **3. The SDT has modified the standard in consideration of your comment and added "Time-based" to the title of Table 1a.**	
MRO NERC Standards Review Subcommittee	A. In the applicability section 4.2.5.5, change the statement to say, "Protection systems for BES connected station-service transformers for generators that are part of the BES." B. In the applicability section 4.2.5, change the statement to replace "are part of" with "directly connected to". The "are part of" will be left to interpretation. Please indicate the added reliability benefit by collecting this in Table 1a Page 9 protection system

[4] A maintenance correctable issue is a failure of a device to operate within design parameters that can not be restored to functional order by repair or calibration while performing the initial on-site maintenance activity and that requires follow-up corrective action.

Organization	Question 10 Comment
	communication equipment and channels. C. If a breaker failure relay is also being used for sync-check, is it required to verify the voltage inputs since they are used for a closing function and not a tripping function? It is understood that the current inputs would have to be verified since these are used for breaker failure tripping. D. Please clarify requirement R1-1.1, does one have to individually list out each Protection System and its associated maintenance activities or can the PSMP be a generalized procedure that covers each of the components in all of a utility's Protection Systems? E. All references to breakers should be eliminated; thus, eliminate breaker trip coils. Breakers are primarily mechanical in nature and should be excluded similar to mechanical relay systems such as sudden pressure relays. F. Clarify that trip coils checks or tests can be verified through alternate means other than physically tripping the coil or potentially requiring system outages to physically trip a coil. Alternate tests could consist of checking self monitoring relays, continuity lights, etc. Trip coil tests could require transmission line outages which can be denied by regulatory authorities due to system conditions beyond an entity's control. Significant delays of months or longer could occur to obtain a transmission line outage. Further, potentially requiring transmission line outages for trip coil test could harm BES reliability by increase the number of force transmission line outages due to testing. System reliability could be significantly negatively impacted anytime testing on trip circuits is performed due to human errors causing outages or regional disturbances. G. One item R1.3 (inclusion of batteries) was questioned as why this was specifically called out. It should be part of the definition. H. Define the term "condition-based". I. The format of the tables is poor with 17 line items addressed in each. It is difficult to relate one table to another because they are not consistent with regard to the type of components. For example table 1a references of components a "breaker trip coil (only)" and the 1b references "trip coils and auxiliary relays". J. R1.1 please add "as they apply to the applicable entity". As stated now, all three tables must be accomplished. K. Please add the words "time based maintenance methods" to table 1a for clarity in the heading. L. Table 1b under general description, last sentence the word "elements" should be replaced with "maintenance activities" which will provide exactly what is intended. M. Table 1b, if maintenance activities for level 2 monitoring include level 1 maintenance activities, then redundant activities in table 2 that are contained in table 1 should be removed (the same for table 3 to table 2 to table 1). N. If an entity maintenances a protective relay such that it is included in level 2 monitoring (a Condition Based Maintenance program) and this relay is considered to have a maximum interval of 12 years, does the entity need to also perform the maintenance activities for level 1 monitoring since the table 1b header indicates, "General Description: Protection System components whose alarms are automatically provided daily (or more frequently) to a location where action can be taken for

Organization	Question 10 Comment
	alarmed failures. Monitoring includes all elements of level 1 monitoring with additional monitoring attributes as listed below for the individual type of component"?

Response: The SDT thanks you for your comments.

A. The station-service transformer impacts proper operation of the BES generator, whether the station service transformer is connected to the BES (for example, at 138 kV) or not (for example, connected at 46 kV). (See FAQ III-2-A, page 20)

B. This suggestion may actually bring a small, non-BES, generator facility that is connected to the BES into scope. For example, if a Region specifies that any generator greater than 20 MVA connected at 100 kV or above is BES, your suggestion would bring a 10 MVA generator (similarly connected) into scope. Clause 4.2.5 currently limits applicability to BES generators.

C. No. The maintenance activities for this component have been modified to clarify.

D. The entity may use whatever method it wishes, but the documentation of the program and the implementation of the program needs to be adequate to satisfy the Compliance Enforcement Authority that the program meets the requirements of the standard. Please be advised that all requirements of the standard must be met, including that the relevant activities in the Tables are performed.

E. The SDT believes that the breaker trip coils are a vital electrically-operated component of the DC control circuit, and they therefore must be included. For testing the breaker trip coil, the breaker must be observed to trip; however, such additional testing such as travel recorder, breaker timing, etc need not be performed to satisfy PRC-005.

F. The SDT considers that the electro-mechanical devices (trip coils, aux relay coils, etc) need to be periodically exercised to assure that they operate properly. Much of the rest of the control circuit can be verified by monitoring, including continuity of the coils, but this doesn't assure operating integrity of these devices. An entity is necessarily obligated to manage its maintenance program to complete the necessary activities on time, and various other NERC standards address the management of risk related to planned outages.

G. In the Protection System Maintenance – Frequently Asked Questions (FAQ) document (FAQ IV-3-G, page 26.) and Supplementary Reference Document Section 15.4 (page 23), the Drafting Team explains why batteries are excluded from PBM and the standard should include all batteries associated with a Protection System in a time-based program.

H. The SDT declines to introduce a defined term for this. Table 1b and Table 1c identify condition-based maintenance to include consideration of the known condition of the component within condition-based maintenance. The Supplemental Reference Document (Section 6, page 8) and the FAQ (V-3, page 38 and V-4, page 39) also describe condition-based maintenance considerations.

I. The SDT has modified to Tables to make them more consistent with each other.

J. The SDT has modified the standard in consideration of your comment. The original Pwas replaced with a new Part 1.1 and a new Part 1.3 was added as shown below,

1.1. Identify all Protection System components.

1.3 For each Protection System component, include all maintenance activities specified in Tables 1a, 1b, or 1c associated with the maintenance method used

Organization	Question 10 Comment
	per Requirement 1, Part 1.2. **K. The SDT has modified the standard in consideration of your comment - and added "Time-based" to the title of Table 1a.** **L. The SDT has modified the standard in consideration of your comment. The revised language does not use the word, "elements" – it reads:** **M. The SDT disagrees. Repeating the activities in Table 1b or Table 1c allows the entity to not refer back to the previous table.** **N. If an entity decides to implement Table 1b for qualified components, the activities in Table 1b supersede the comparable activities in Table 1a. Requirement R1 has been modified to clarify.**
CenterPoint Energy	a. CenterPoint Energy believes the existing maintenance standards are preferable to the approach embodied in this proposal. However, if most entities agree with the SDT's approach, CenterPoint Energy recommends deleting Under-Frequency Load Shedding (UFLS) and Under-Voltage Load Shedding (UVLS) system equipment from the scope of this proposal because the performance requirements for UVLS and UFLS are substantially different from transmission and generation protection schemes. Few would argue that protection schemes that clear faults on the Bulk Electric System must be very reliable, much more reliable than schemes that shed distribution load for under-voltage or under-frequency situations. If an entity plans to shed a contemplated level of load for a contemplated set of circumstances based upon planning simulations, that plan would translate into a certain number of distribution feeders that are reasonably predicted to shed a load amount that is reasonably close, but not exactly equal (unless by chance) to the contemplated amount of load shed. For example, if a certain number of distribution circuits equals 10% of the entity's load during one time (such as system peak), that same amount of distribution circuits will almost certainly equal a different percentage of the entity's load at other times. So, if hypothetically 100 distribution circuits are armed with UVLS or UFLS relays set a given trip point, the actual percentage of load that will be shed will vary under different system conditions. Therefore, if 95 of the distribution circuits actually trip on one occasion and 98 trip on another occasion, the difference in system performance is immaterial because the exercise is not that precise, especially when planning simulation uncertainties are also introduced into the picture. For these reasons, CenterPoint Energy believes it is unreasonable to impose a high level of rigidity into load shedding schemes when the designs of the schemes inherently do not depend on such rigidity. If the SDT agrees, then the revised standard would not be applicable to Distribution Providers, and 4.1.3 can be deleted. b. CenterPoint Energy also disagrees with the proposed expansion of the Protection System definition. The present definition does not include trip coils; and correctly so, as trip coils are part of the circuit breaker. A protection system has correctly performed its function if it provides tripping voltage up to the breaker's trip coils. From that point, the breaker can fail to timely interrupt fault current due to several factors such as a binding mechanism that affects breaker clearing time, a broken pull rod, a bad insulating medium, or bad trip coils. Local breaker failure protection is installed to address the various possible causes of circuit breaker failure. Planning standard TPL-001 tables 1C and 1D specifically support the present definition, as Delayed Clearing is noted as due to "stuck breaker or protection system failure".
Response: The SDT thanks you for your comments.	

Organization	Question 10 Comment
a. The four legacy standards are combined here in response to several suggestions, including from FERC (in Order 693) because of substantial equipment similarities. For the reasons that you note, the activities specified for UFLS and UVLS protection are somewhat less comprehensive than those for fault protection. **b. The SDT contends that the trip coil itself is an integral and essential component of the station control circuitry, and it must be assured that the trip coil operates. The SDT has also been diligent in excluding any facets of the breaker mechanism from consideration, thereby excluding consideration of many of the failure types listed. Many breaker failure schemes are designed with the presumption that the trip coil is properly initiated, and are more focused on mechanism failures.**	
NextEra Energy Resources	a. The level of effort that will be required to be in compliance in accordance to PRC-005-2 is substantial. Also, it will be difficult to create one maintenance program for all NextEra Energy sites that establishes maintenance intervals based the implementation of a combination of the three allowable types of maintenance programs (time-based, condition based, and/or performance based maintenance). As a result, a high risk exists that something will be missed or carried out incorrectly. b. What is the implementation period? How will the standard be implemented in relation to the entity's maintenance scheduled in accordance with existing intervals specified in the current Protection System Maintenance and Testing Procedure that meets the requirements of PRC-005-1 but will exceed PRC-005-2's established maximum intervals? Once PRC-005-2 becomes mandatory, entities should not be required to re-do testing in accordance with the new intervals. Instead, entities should be allowed to implement the newly established intervals after the last known cycle. c. Protection System Maintenance Program (PSMP): (c1) The PSMP definition would be better defined if the first sentence was changed to "An ongoing program by which Protection System components are kept in working order and where malfunctioning components are restored to working order." (c2) Please clarify what is meant by "relevant" under the definition of Upkeep. Should "relevant" be changed to "necessary"? (c3) The definition of Restoration would also be more explicit if changed to:The actions to return malfunctioning components back to working order by calibration, repair or replacement. (c4) Please clarify the definition of Restoration. For example, if a direct transfer trip system has dual channels for extra security even though only one channel is required to protect the reliability of the BES and one channel fails, must both be restored to be compliant? d. Protection System (modification): (d1) Voltage and current sensing inputs to protective relays" should be changed to "voltage and current sensors for protective relays." Voltage and current sensors are components that produce voltage and current inputs to protective relays. (d2) "Auxiliary relays" should be changed to "auxiliary tripping relays" throughout PRC-005-2, FAQ and the Draft Supplementary Reference.

Organization	Question 10 Comment
	(d3) The word "proper" should be removed from the standard. It is ambiguous and should be replaced with a word or words that are clear and concise. e. Additionally, NextEra Energy concurs with the following comments made by other entities: (e1) PRC-005 Sect B (R2): More clarity needs to be provided. Does this requirement require the utility to document the capabilities of its various protection components to determine fully and partially monitored protection systems? If so the requirement for such documentation should be clearly spelled out. Usually each requirement has a measurement (of compliance) and I'm not clear how this will be done. (e2) PRC-005 Sect B (R4.1): A "grace period" similar to the NPCC Criteria should be considered in case it is not possible to obtain necessary outages.

Response: The SDT thanks you for your comments.

a. We agree that the effort may be substantial. However, the effort and compliance risk can be minimized by simply implementing Table 1a, together with R1 and R4.

b. A proposed Implementation Plan was posted with this draft of the standard, and will continue to be posted with future drafts (including ballot drafts when the standard reaches that stage). Please review the posted Implementation Plan.

c1. The SDT does not believe that the suggested change is substantive, and sees no reason to make it.

c2. Some updates may not affect the operation of the device as applied, and therefore are not relevant. "Necessary" would imply an additional level of review to determine whether the device would operate properly without the updates, while "relevant" simply implies that the update applies to the function.

c3. The SDT does not believe that the suggested change is substantive, and sees no reason to make it.

c4. The standard establishes that all components need to be fully maintained, and that they will function as designed. The SDT appreciates that some "restoration" activities may take an extended time to complete, but also contends that restoration to the designed condition is a vital element of maintenance.

d1. The SDT has modified the standard in consideration of your comments.

d2. "Auxiliary tripping relays" may exclude essential other internal Protection System functions. Therefore, the SDT declines to adopt this suggestion.

d3. "Proper", "working condition", "correct", etc, are all somewhat subjective terms that address the application-specific requirements related to the specific use. For example, one entity's design standards may require that an electromechanical relay be within a 2% tolerance of the ideal operating characteristics, while another may only require that it be within 5%. Each of these is proper, correct, etc, for the application.

e1. The requirement establishes that an entity be able to prove that the specified monitoring attributes are met. There may be many methods of documenting this – see Section 15.6 of the Supplemental Reference Document (page 24) which was posted with this standard. Measures, etc, will be included with the next posted draft of the standard.

Organization	Question 10 Comment
e2. The SDT is concerned that a "grace period", if permitted, would be used to establish a de-facto longer interval, and that the established intervals would thus not be measurable. Additionally, FERC Order 693 directed that NERC establish maximum maintenance intervals, and allowing for a "grace period" would not conform to this directive. Please refer to Section 8 of the Supplementary Reference Document for a discussion on this issue.	
City Utilities of Springfield, MO	As proposed, this standard is very long and complex. Additionally, in requirement R1, bullet 1.1 ought to state "For each component used in each Protection System, include all "applicable" maintenance activities specified in Tables 1a, 1b and 1c". For instance, if every component has continuous monitoring, why should the program include 1a and 1b?
Response: The SDT thanks you for your comments. The SDT has modified the standard in consideration of your comments. The original Part 1.1 was replaced with a new Part 1.1 and a new Part 1.3 was added as shown below, 1.1. Identify all Protection System components. 1.3 For each Protection System component, include all maintenance activities specified in Tables 1a, 1b, or 1c associated with the maintenance method used per Requirement 1, Part 1.2.	
Austin Energy	Austin Energy is meticulous in adhering to the current maintenance standard and is convinced that its current maintenance and documentation program is adequate to maintain its reliable electric power system. 1. Austin Energy appreciates the good intentions of the SDT but believes that the approach taken increases complexities to the maintenance process, introduces unwarranted workload in excessive documentation, is inflexible towards system configuration and experience, and is over prescriptive in nature. The approach also fails to distinguish the harmful effects of over-maintenance, increasing reliability risk due to human error and ultimately affecting the overall performance and reliability of the system. 2. Another concerning issue is the addition of the breaker trip coil to the protection system definition. Our position is that the trip coil should be part of the breaker. The protection system would be considered operating correctly if it provided the output signal for the trip coil when expected. Hence the trip coil should be excluded from the new protection system definition. 3. Performance based maintenance as specified in the attachment is extremely difficult and cumbersome to navigate. The intricate requirements are difficult to comprehend and will entrap entities making a good faith effort to comply. We believe this approach may become burdened with undesirable consequences. 4. Last but not least, Austin Energy believes that under-frequency load shedding (UFLS) and under-voltage load shedding (UVLS) systems should not be included in the scope of this new proposal. UFLS and UVLS are a wholly different entity as compared to the Bulk Electric System (BES). Rigidity imposed onto distribution system equipment, operating schemes and performance is uncalled for and overreaching.
Response: The SDT thanks you for your comments. **1. The SDT believes that the level of prescription within the standard is necessary to satisfy the guidance in FERC Order 693, and also to address**	

Organization	Question 10 Comment
observations from the Compliance Monitoring entities (the Regional Entities and NERC) that PRC-005-1 is excessively general. FERC Order 672 also specifies that NERC Standards should be clear and unambiguous. The SDT has therefore defined the minimum activities necessary to implement an effective PSMP. To minimize system impact of such maintenance and possible errors, the maintenance necessarily should be scheduled at a time that minimizes the risks. **2. The SDT contends that the trip coil itself is an integral and essential component of the station control circuitry and it must be assured that the trip coil operates. The SDT has also been diligent in excluding any facets of the breaker mechanism from consideration.** **3. If an entity considers that a PBM would be difficult to implement, they may choose to implement simple time-based maintenance (Table 1a) and/or condition-based maintenance (Tables 1b and Table 1c). This option is provided for those who elect to take advantage of the opportunities presented.** **4. The four legacy standards are combined here in response to several suggestions, including from FERC Order 693 because of substantial equipment similarities. The SDT disagrees that the requirements for UFLS and UVLS are "uncalled for and overreaching", and has specified less stringent requirements for these devices.**	
Progress Energy	Comments: 1- Requirement R4 "Each Transmission Owner, Generator Owner, and Distribution Provider shall implement its PSMP, including identification of the resolution of all maintenance correctible issues as follows: " Based on the definition provided (A maintenance correctable issue is a failure of a device to operate within design parameters that can be restored to functional order by calibration, repair or replacement.) Pr ogress Energy believes that this will become a potential tracking issue. To maintain all of the data required to meet this definition can be onerous. 2- The biggest concern with the proposed PRC is that for many entities, the proposed maintenance and intervals will greatly increase the entities workloads. There are not enough relay technicians available to handle this increased workload across the country. 3- The Implementation Plan for R2, R3, and R4 identified in the Draft Implementation Plan for PRC-005-02, dated July 21, 2009, is very reasonable. This plan recognizes that it is unrealistic to expect entities that are presently using intervals that exceed the maximum allowable intervals to immediately be in compliance with the new intervals. It allows implementation to be implemented across the maximum allowable interval. This is a reasonable approach for the following reasons: a. Sufficient resources are not available to perform the additional maintenance proposed on an accelerated basis. b. It allows the staggering of the PMs so that resource loading can be balanced. Without the ability to stagger the PMs, there would be an initial "bow-wave" of PMs and future "bow-waves" each time the interval is up. 4- The Implementation Plan for R1 identified in the Draft Implementation Plan for PRC-005-02, dated July 21, 2009, is not reasonable. The implementation plan requires entities to be 100% compliant three months following approval of the PRC. This is not a reasonable timeframe given the program changes required, including: a. A massive effort to review circuit schematics to determine whether equipment meets the definition of partial-monitored or

Organization	Question 10 Comment
	unmonitored. b. Many procedures, basis documents, and job plans will need to be revised or created. c. The work management tool will have to be modified to reflect the new intervals. 5- PRC-008-1 placed only the relays associated with UFLS in the compliance program. Contrary to PRC-008-1, the draft PRC-005-02 places all components (relays, instrument transformers, dc supply, breaker trip paths) in the compliance program. This forces much of the distribution-level components to be placed in the compliance program. 6- The response to Item 2A of the FAQ Document, page 17, seems to indicate that commissioning test results do not have to be captured as the initial test record, only the in-service date. Is this a correct interpretation of the response? 7- Table 1a (Unmonitored Protection Systems) seems to indicate that a complete functional trip test must be performed for the UFLS/UVLS protection system control circuitry. This wording is identical with the wording for the protection system control circuitry (except UFLS/UVLS) table entry. This implies that UFLS/UVLS functional testing should include tripping of the feeder breakers for these unmonitored systems. Table 1b (Partially-Monitored Protection Systems) indicates that actual tripping of circuit breakers is not required under the UFLS/UVLS control circuit functional testing. Is this because trip coil continuity is being monitored and alarmed under Level 2 Monitoring? Must feeder breakers be tripped during the functional testing if the trip coil continuity is not monitored and alarmed (unmonitored protection system)? 8- All standards to be retired should be specifically listed in the Implementation Plan.

Response: The SDT thanks you for your comments.

1. Requirement R4.3 has been added to the standard to address some of these concerns. It reads as follows:

R4. Each Transmission Owner, Generator Owner, and Distribution Provider shall implement its PSMP, including identification of the resolution of all maintenance correctable issues as follows:

4.3. Assure either that the components are within acceptable parameters at the conclusion of the maintenance activities or initiate any necessary activities to correct unresolved maintenance correctable issues.

2. The SDT understands that workloads may increase. However, with increasing sensitivity to degraded system performance, the increased attention to Protection System maintenance is critical to BES reliability. NERC's analysis of major system events reveals that Protection System maintenance is a contributing factor to many major system problems.

3. The SDT appreciates that you recognize these issues which were central in developing the Implementation Plan.

4. Table 1a provides activities and intervals for components for which Level 2 or Level 3 maintenance cannot be fully justified. Additionally, considerable time can transpire between successful balloting and regulatory approvals and major elements of the standard will be largely established even well before balloting. Entities are encouraged to proactively begin making the necessary program adjustments.

Organization	Question 10 Comment
5. PRC-008 currently addresses "UFLS equipment" which is a bit vague. Arguably, the identified components within PRC-005-2 may be regarded as various portions of "UFLS equipment". The SDT contends that the indicated activities are necessary, and notes that some of the activities are less stringent than for other Protection System components. **6. FAQ IV-2-A, page 22) now indicates that commissioning records are one option to establish the start date of maintenance intervals, and to establish the baseline.** **7. The Tables have modified to clarify that actual tripping of the breakers is not required for Protection System control circuitry for UFLS/UVLS only.** **8. The SDT agrees. The Implementation Plan will be modified to indicate retirement of the four legacy standards upon the completion of the Implementation Plan.**	
Nebraska Public Power District	Definition of Terms: 1. Footnote 2 for R4 defines a "maintenance correctable issue". This should be added to the Definition of Terms section. 2. Sections 4.2.5.4 and 4.2.5.5 inappropriately extend Generator Protection Systems to Station Service Transformers. These are components necessary for plant operation however they are not part of the generator protection scheme. This conclusion is supported by the explanations on page 16 of the FAQ. 3. The FAQ states the operation of the listed station auxiliary transforms protective relays would result in the trip of the generating unit and, as such, would be included in the program. The FAQ goes on to state that relays which trip breakers serving station auxiliary loads such as pumps, fans, or fuel handling equipment, etc., need not be included in the program even if the loss of those loads could result in a trip of the generating unit. The FAQ appears to be inconsistent. Station auxiliary transformers are included because they would result in the trip of the generating unit while other loads such as pumps, fans, etc., are excluded even if their trip could result in a trip of the generating unit. In my opinion, the station service transformers like pumps, fans, etc. are components necessary for plant operation but not necessary for generator protection and should therefore be excluded from PRC-005-2 by removing Sections 4.2.5.4 and 4.2.5.5 from the standard and modifying the FAQ accordingly. 4. R1 (1.1) First sentence: "For each component used in each Protection System..." is ambiguous. The sentence should be revised to say..."For each Protection System component, include all maintenance activities specified in Tables 1a, 1b, and 1c." This limits the components to only those identified by the definition of a Protection System. 5. R2 End of sentence: "possess the necessary monitoring attributes." is ambiguous. The sentence should be revised to say..."possess the monitoring attributes identified in Tables 1b or 1c." This specifically defines which attributes are necessary. 6. R4 I am concerned with including the phrase "including identification of the resolution of all maintenance correctible issues". Providing evidence of implementation of the PSMP will require the collection and submittal of all work documents that restored a device to functional order by calibration, repair, or replacement. It is reasonable to assume that appropriate corrective actions were taken for each specific situation. Identification of the resolution will add a significant documentation burden without adding to the reliability of the BES. Implementation of the PSMP may be evidenced without including identification of the resolution of all

Organization	Question 10 Comment
	maintenance correctible issues. It is interesting to note that nowhere in PRC-005-2 does it state that you have to take corrective actions to return a component to normal operating conditions. "No action taken" can be the resolution taken by the utility of a maintenance correctible issue.

Response: The SDT thanks you for your comments.

1. Establishing this term within the "Definition of Terms" would add this to the NERC Glossary. Instead, the SDT believes that this term is relevant only to this Standard, and that establishing it in the Glossary of Terms rather than simply as a term within this standard would expose entities to potential compliance exposure by having to refer to the Glossary to implement the standard.

2. Station service transformers are system components and the Protection Systems on those system components must be maintained as indicated in this standard. (See FAQ III-2-A, page 20)

3. Many of the components (pumps, fans, etc) are redundant, and a plant may be able to withstand loss of one of these. However, the loss of the station service transformer will result in simultaneous loss of many such elements, and will result in immediate plant shutdown. Also, the station service transformers may be necessary to achieve an orderly plant shutdown, and the loss of a station service transformer may result in a more abrupt plant shutdown. Improper Protection System performance due to maintenance issues must not be the cause of such an event. (See FAQ III-2-A, page 20)

4. The SDT has modified the standard in consideration of your comment. The original Part 1.1 was replaced with a new Part 1.1 and a new Part 1.3 was added as shown below,

1.1. Identify all Protection System components.

1.3 For each Protection System component, include all maintenance activities specified in Tables 1a, 1b, or 1c associated with the maintenance method used per Requirement 1, Part 1.2.

4. The SDT has modified the standard in consideration of your comment. The requirement was modified to read as follows:

R2. Each Transmission Owner, Generator Owner, and Distribution Provider that uses condition-based maintenance intervals in its PSMP for partially or fully monitored Protection Systems shall ensure the components to which the condition-based criteria are applied, possess the monitoring attributes identified in Tables 1b or 1c.

6. A fundamental tenet of compliance is that "if it's not documented, it's not done." Therefore, the documentation you describe will likely be necessary to demonstrate compliance. The PSMP definition, the new R4.3, and the General Requirements of each Table all establish that maintenance-correctable issues need to be resolved. If there is a maintenance-correctable issue, "no action taken" does not seem to be an acceptable response.

Florida Municipal Power Agency, and its Member Cities	1. Facilities applicability 4.2.2, due to the changes in applicability of the draft PRC-006, ought to refer say something like UFLS which are installed per requirements of PRC-006 rather than per ERO requirements. 2. In requirement R1, bullet 1.1 ought to state "For each component used in each Protection System, include all "applicable" maintenance activities specified in Tables 1a, 1b and 1c". For instance, if every component has continuous monitoring, why

Organization	Question 10 Comment
	should the program include 1a and 1b?

Response: The SDT thanks you for your comments.

1. The existing PRC-006 establishes that entities install UFLS in accordance with Regional requirements (which, by extension, are ERO requirements). In accordance with FERC Order 693, PRC-006 is currently undergoing revision to be a continent-wide standard, in which case it will itself be an ERO requirement. Clause 4.2.2 applies equally to either situation.

2. Requirement R1has been modified in consideration of your comment. The original Part 1.1 was replaced with a new Part 1.1 and a new Part 1.3 was added as shown below,

1.1. Identify all Protection System components.

1.3 For each Protection System component, include all maintenance activities specified in Tables 1a, 1b, or 1c associated with the maintenance method used per Requirement 1, Part 1.2.

American Transmission Company	1. General Comment: The requirements section of the standard seems acceptable. 2. NOTE: Why does R1.3 identify the inclusion of batteries? We believe that this should be part of the definition. 3. We believe that the team needs to define the term “condition-based”. 4. Does the Protection System definition in PRC-005-2 or interpretation of the standard and the tables line up with other NERC Standards? 5. The table formats (1a through 1b) are confusing and should be reconsidered. We found is difficult to relate one table to another. (No consistency in the Type of components)

Response: The SDT thanks you for your comments.

1. The SDT thanks you for your support.

2. R1.3 specifies that batteries can be tested ONLY via TBM. That is the intent of the requirement. In the Protection System Maintenance – Frequently Asked Questions (FAQ) document (FAQ IV-3-G, page 26.) which accompanied the standard and in the Supplementary Reference Document, Section 15.4 (page 23), the SDT explains why batteries are excluded from PBM and the standard should include all batteries associated with a Protection System in a time-based program.

3. The SDT declines to introduce a defined term for this. Table 1b and Table 1c identify condition-based maintenance to include consideration of the known condition of the component within condition-based maintenance. The Supplemental Reference Document, Section 6 (page 8) and the FAQ (V-3, page 38 and V-4, page 39) also describe condition-based maintenance considerations.

4. The SDT was required to investigate all uses of this defined term with NERC standards and assure that these changes are consistent with the other

Organization	Question 10 Comment
applications. **5. The SDT has modified to Tables to make them more consistent with each other.**	
CPS Energy	Have several comments and questions: 1. I think that the way that the tables are done is confusing. My biggest complaint is that the "breakdown" of the Type of Component varies between the tables. For example, in tables 1a and 1B, you have Protective Relays, but in table 1c, you have Protective Relays and Protective Relays with trip contacts. This is a little confusing at times. 2. I also find the UFLS/UVLS requirements confusing as well. It can be confusing to figure out when the UFLS/UVLS has a separate requirement. Would prefer to see the UVLS/UFLS in separate tables; e.g. 2a, 2b, 2c. 3. SPCTF should provide the basis for how the intervals in table 1 were derived. While the supplemental describes that a survey of its members with a weighted average was used to determine the maintenance intervals. However, what is not clear is what exactly was surveyed in terms of components. Was it just relay calibration testing? Functional testing? What about communications, voltage and current sensing devices, trip coils, etc? Was UVLS and UFLS looked at separately from transmission? Was generation also considered as well? Why did values change from the SPCTF technical reference "Relay Maintenance Technical Reference" dated September 13, 2007? For example, UVLS/UFLS testing and calibration went from 10 years to 6 years for un-monitored, communications went from 6 months to 3 months for un-monitored, and instrument transformer testing went from 7 years to 12 years for un-monitored systems. What is the basis for the intervals? 4. The committee should reconsider the use of the term "A/D converters". The point of the requirement is to assure that the analog signal from the instrument transformer is correct to the processor. Two problems with just saying "A/D converters". One, it ignores the digital relay input transformers of microprocessor relays. The SEL-4000 test set can bypass these transformers. Would using this test set be adequate to test the "A/D converters"? Two, some relays, such as the SEL-311L, perform an A/D self-test. I do not think that the A/D self-test performs the testing that is being sought by the document. 5. Could a better example of "Calendar Year" be provided? Is it simply the years difference, or should the days be included as well? In your example in the reference document, you show that December 15, 2008 and December 31, 2014 as meeting the requirement of 6 calendar years. Would like to see a more exaggerated example. Would an unmonitored protective relay is calibrated on January 1, 2008 and then again on December 31, 2014 meet the "Maximum Maintenance Interval" of "6 Calendar Years"? 6. Does the standard address breakers and other switching devices that do not have "trip coils". Magnetic actuated circuit breakers, reclosers, and possibly other devices do not have trip coils to monitor or test. Do the trip coil testing and requirements fully take this account? If a breaker does not have a trip coil, is some other type of test required? Does not having a trip coil prevent extending the Protection System Control Circuitry interval to 12 years? 7. The requirement for testing Voltage and Current Sensing devices should be better thought out as to what is trying to be accomplished. On page 11 of the reference document, item 6 under "Additional Notes for Table" it states that "phase value and

Organization	Question 10 Comment
	phase relationships are both equally important to prove". In both the FAQ document (page 6, 3A) and the reference document (page 21, 15.2), several methods to verify the voltage and current sensing inputs to the protective relays and satisfy the requirement are given. However, these methods do not all seem to verify the same thing. Totalizing watts and vars on the bus verifies that the current transformers are correctly and providing correct signals to the relays, but do not necessarily verify that the voltage sensing device is necessarily correct if the same PT is used for all relays on the bus. Performing a saturation test on a CT and a ratio test on the PT does not verify the phase angle relationships, which is stated as important on page 11 of the reference document. What exactly needs to be accomplished by the Voltage and Current Sensing devices testing? That an analog signal is getting from the instrument transformer to the device? That the signal is an accurate representation of the measured quantity? What about frequency for UFLS relays, where voltage magnitude may not be that important? Do CT's need to be verified for multiple CT grounds? Do the any examples described necessarily find multiple ct grounds? 8. This standard should also address the ramifications of RRO's not allowing for equipment to be removed from service for testing. Either RRO's should be required to allow outages in some time frame or leeway should be given to entities that cannot get equipment out for maintenance because RRO's will not grant reasonable outage times for testing and maintenance. 9. Page 13 of the reference document states that the 3-month inspection should include checking that "equipment is free of alarms, check any metered signal levels, and that power is still applied." What is meant by "metered signal levels"? What does the term "metered" mean, specifically in terms of an on-off power line carrier scheme? 10. It appears that if a company on a TBM plan has shorter intervals than the maximum allowable of this proposed standard, the company would not be in violation if they did not meet their own plan but still met the intervals required by this proposed standard. Is this true? Could this actually reduce reliability of the BES if companies are now allowed to extend intervals to those listed in this document without any justification?

Response: The SDT thanks you for your comments.

1. The SDT has modified to Tables to make them more consistent with each other.

2. Many of the components of UFLS and UVLS are very similar to other generic Protection System components, with similar maintenance activities. The SDT has modified the Tables to clarify activities which apply specifically to UFLS and/or UVLS.

3. The SPCTF, in an earlier technical paper, provided descriptions of the derivation of the intervals, but this technical paper was not charged with developing a measurable standard. The SDT has used this information, as well as consideration of system and generation plant operating constraints, EPRI reports, IEEE surveys, and experience of SDT members and others, to develop the intervals in the tables. These intervals were also adjusted to address the SPCTF's recommendations about grace periods without providing grace periods. The SDT also considered intervals that supported establishment of systemic maintenance programs.

4. The SDT modified the standard in consideration of your comment. A/D converters are now discussed only in the Monitoring Attributes within Table 1c; otherwise, the relay must be confirmed to operate properly. However, the SDT did NOT define methodology.

5. Disregard the complete date and just look at the year portion. For a 6 calendar-year interval, if the test date was IN 2004, the next test date must be IN or

Organization	Question 10 Comment
before 2010. **6. Where relevant to the requirements of the standard, any of these devices apply similarly. Many of the alternate technologies mentioned do not seem relevant to BES Protection Systems, but instead to UFLS and/or UVLS systems. The required maintenance activities for these components do not require actual test tripping.** **7. No single method of verification may be relevant for every imaginable situation. The activities relevant to Voltage and Current Sensing Devices have been revised in consideration of your comment.** **8. Some entities may need to perform certain maintenance activities more frequently to assure that the activities are performed within the required intervals. Allowing a "grace period" would create a standard that is not measurable. Please refer to Section 8 of the Supplementary Reference Document (page 9) for a discussion on this issue. Outages must be planned in accordance the Reliability Coordinators (RRO's, or RE's, have no role in this) to support reliable system operation.** **9. "Metered signal levels" refer to the communication signal levels which are part of proper communications system function for certain equipment, such as power-line carrier systems. The SDT is continuing to align the three documents (Standard, Supplemental Reference, and FAQ) to assure consistency.** **10. You will be held to compliance with your plan, whatever it is, under R4, but your plan must also adhere to the intervals established by NERC. As long as you still have elements subject to PRC-005-1, you need to comply with the program established for PRC-005-1. When you have fully implemented PRC-005-2, the requirements of PRC-005-1 no longer apply. However, the SDT hopes that entities that feel that a shorter interval is appropriate will continue to use that interval.**	
JEA	1. Implementation Plan - Strongly encourage keeping the implementation plan and allow for an extension of the implementation plan for the time required to fund, design, procure, install and commission redundant protection systems for current non-redundant lockout systems at the lower kV levels of the BES. 2. Our present and past performance of LOR and auxiliary relays will support a PBM/CBM program that allows for a much longer time than the six years proposed for EM LOR trip testing. To use a TBM for LORs of six years, may in fact, lower the reliability of the BES due to the complete outages required, along with the detailed procedures that must be created and rigorously followed to perform these tests without subsequent load loss on the BES.
Response: The SDT thanks you for your comments. **1. If an entity expects to encounter difficulty in performing the maintenance specified in the standard, the SDT encourages them to begin implementation of the necessary features to support maintenance while the standard is still in a development or approval stage.** **2. The SDT encourages you to begin assembling the documentation necessary to support a PBM for these components such that you may implement that PBM when the standard becomes effective.**	
Consumers Energy Company	1. In Table 1a for Station dc supply it requires verification that no dc supply grounds are present. DC grounds are common

Organization	Question 10 Comment
	occurrences and the activity should be to document if dc grounds are present. 2. Please specify how cell to cell connection resistance is measured. 3. For station dc supply (battery is not used) change "Verify the continuity of all circuit connections that can be affected by wear and corrosion" to "Inspect all circuit connections that can be affected by wear and corrosion." 4. Is "metered and monitored" equivalent to "alarming"? 5. If a component failure causes the unit to trip, what is the purpose of testing it? It will always test positive until the point of failure and that point is identified when the unit trips. 6. In the Facilities Section 4.2.5.4 "station service transformer" should be changed to "unit connected auxiliary transformer" to be consistent with Figure 2 of the Supplement Reference Document. 7. Facilities Section 4.2.5.5 should also include "System connected auxiliary transformers are excluded when only used for unit start-up." 8. There should be an allow variance period (grace period) for the testing intervals. 9. The maximum allowable time periods should be in calendar years, defined as "occurring anytime during the calendar year." 10. The following statement should be added to Requirement 1.2: "Identification at a program level is permissible if all components use the same maintenance method."

Response: The SDT thanks you for your comments.

1. The SDT has modified the standard in consideration of your comments concerning dc grounds – the maintenance activity was revised to read, 'Check for unintentional grounds."

2. The IEEE Standards 1188 and 450 have very detailed descriptions of how to measure cell to cell connection resistance using a Micro-Ohm Meter.

3. Upon consideration of your comment, the SDT determined that it is important to both "check the continuity" and to verify the physical condition. Therefore, the standard has been modified to include both.

4. Not necessarily. "Metered and monitored" are more detailed than "alarming". Alarms simply report an abnormal condition, while "metered and monitored" will probably actually report values.

5. In this case, testing of the component should assure that the component functions properly and thus does NOT result in an unintended trip of its system component, and that it WILL trip when called upon to do so.

6. The SDT contends that "station service transformer" is a more universal description for this component. The Supplemental Reference Document has been modified for consistency.

7. The SDT contends that "startup transformer" Protection Systems also need to be maintained per PRC-005-2. During startup, these components are

Organization	Question 10 Comment
critical for reliability. On the other hand, maintenance of the Protection Systems on these system elements should be somewhat easier to schedule. **8. The SDT considered this issue when developing the intervals, and realizes that some entities may need to perform certain maintenance activities more frequently to assure that the activities are performed within the required intervals. Specifically, for generation facilities, there would seem to be numerous opportunities within the 6-year or longer intervals to perform the required maintenance during a scheduled plant outage, and maintenance with shorter intervals can be characterized as non-intrusive maintenance, more of an inspection than anything else; the SDT believes that this maintenance can be done on-line. The SDT is concerned that a "grace period", if permitted, would be used to establish a de-facto longer interval, and that the established intervals would thus not be measurable. Additionally, FERC Order 693 directed that NERC establish maximum maintenance intervals, and allowing for a "grace period" would not conform to this directive. Please refer to Section 8 of the Supplementary Reference Document (page 9) for a discussion on this issue.** **9. All multi-year periods ARE in calendar years. There are other essential shorter intervals, and the SDT does not agree that these can be extended to a minimum of one calendar year – most of these activities are "inspection" type activities. The SDT does not believe that it is necessary to define this term; "Calendar year" seems to be a very precise term in itself.** **10. To the degree that you can concisely describe your program this way, and demonstrate implementation of your program, it does not seem to the SDT that this modification to the requirement is necessary.**	
ITC Holdings	1. In the Definitions of Terms, the Protection System (modification) should include control circuits up to and including the trip coil of ground switches used in protection schemes. 2. Footnote 2 (Maintenance correctable issue) should be included in the Definition of Terms in the body of the standard.
Response: The SDT thanks you for your comments. **1. To the degree that the ground switch (or, more properly, the Protection System that operates the ground switch) is protecting a BES element, the SDT classifies the ground switch as an interrupting device.** **2. Establishing this term within the "Definition of Terms" would add this to the NERC Glossary. Instead, the SDT believes that this term is relevant only to this standard, and that establishing it in the Glossary of Terms rather than simply as a term within this standard would expose entities to potential compliance exposure by having to refer to the Glossary to implement the standard.**	
Entergy Services, Inc	1. It would be beneficial to also include an explanation or definition of the term "calendar year" in the standard. It is not readily apparent in the draft standard, especially in light of the new maximum interval requirements, that a task can be performed anytime between 1/1 and 12/31. 2. Although addressed in the FAQ and Supplement, the terms "Upkeep" and "Restoration" are referenced in the definitions section of the standard but are not used anywhere else in the document, or with regard to routine activities. They should be eliminated from the standard unless there are upkeep or restoration requirements.
Response: The SDT thanks you for your comments.	

Organization	Question 10 Comment
1. Disregard the complete date and just look at the year portion. For a 6-calendar-year interval, if the test date was IN 2004, the next test date must be IN 2010. **2. While "upkeep" is not used in the standard, the SDT has identified the term as a component of maintenance. "Restoration" is used in R4.3 and within the header of each Table.**	
AEP	1. Monitoring and tracking the activities prescribed in the standard seem too complex to manage at a level needed for auditable compliance. The activities prescribed seem to lean toward conventional protection systems and do not take into account newer special technology devices (High Voltage DC, Static Var Compensator and Phase Shifting transformer controls) and how there are to included. 2. R1 1.2 Does the draft standard require a basis for an entities" defined time based maintenance intervals or can an entity just move directly to the intervals prescribed and use the standard as its basis" 3. R4. This requirement seems to refer to failed equipment and its reporting. This corrective maintenance activity is outside of the interpreted preventative maintenance theme of the standard and adds another layer of complexity in compliance data retention. It also implies that a failed piece of equipment or segment could remain failed for the entire maintenance interval. 4a.Tables 1a & 1b. Station dc supply (that has as a component any type of battery) Interval: 18 months - This requirement incorporates specific gravity testing (where applicable). Although (where applicable) is not defined, it seems it refers to all non-sealed batteries. 4b. For sealed batteries, a more frequent internal ohmic test is prescribed. The same 18 month requirement incorporates ohmic testing which is essentially equivalent to specific gravity. Specific gravity and measure of internal temperature are invasive tests which subject personnel to handling acid and subject the battery to damage. If the logic for sealed batteries is to do more frequent ohmic testing why not allow more frequent ohmic testing as a substitute for specific gravity? We would suggest ohmic testing every 6 months with any questionable results rechecked using specific gravity. This eliminates excessive intervention into all cells and gives a validity check on the ohmic testing. 4c.For Ni-Cad the performance service test has no option (6 year intervals). Typically, the Ni-Cad can yield a low voltage indication; however testing the cells in pairs allows testing and finding bad cells. Why not offer a more frequent ohmic test for the Ni-Cads? 5. Facilities 4.2.1 and R1. "applied on, or are designed to provide protection for the BES." This may be in conflict with Regional Entity (RE) BES definitions. There needs to a clear understanding of what is included and what is not without regional differences. There should be no responsibilities or requirements of the RE. BES also takes on different meanings depending upon which of the many standards it is applied. Data Retention 1.4 Data retention for two intervals could mean that records would need to be kept for 24 years. This seems impractical. Could audit evidence be used in lieu of actual data for long intervals? 6. Tables: Where the interval is in months, the term "calendar" months should be used for clarification.

Organization	Question 10 Comment
	7. Table 1a:"verify the continuity of the breaker trip coil". The SDT assumed that Trip Coil Monitoring (TCM) could be accomplished by verifying/inspecting red lights. This may be true in most cases, but there are designs that do not incorporate this type of TCM and the breaker would have to be exercised every 3 months if not operated by natural events unless the scheme gets replaced. This seems counterproductive to the reliability of the BES. The implementation plan does not take the time required for upgraded systems into consideration. 8. Table 1a DC Supply, 3 month interval "Verify no dc supply grounds are present." Does this mean that you are non-compliant if you have a DC ground? This also needs to be clarified as to the amount of acceptable ground that could be present. Table 1a PS communications equipment channels 3 month interval: Do the activities imply that only alarms be verified and that no channel "playback" be performed? 9. If SPR relay or similar auxiliary relay is excluded as a protective relay, then do we not have to verify its tripping contact as part of the DC system? 10. Table 1a The exclusion of UVLS/UFLS from certain activities is confusing. Does trip coil monitoring not have to be performed on these systems? Tables: 11. Since PT and CT devices themselves are not included in the PS definition, then the word "devices" should be removed from the type of component column describing inputs to the relay. 12. Table 1a. Even though an entity may be on time-based intervals, would a natural occurring fault event reset the maintenance clock for the protection segment involved? 13. Assessment of Impact of Proposed Modification to the Definition of Protection System: Reclosing and certain auxiliary relays have been excluded from protection system definition. This new definition would have an impact on other PRC standards that use this term in its requirements, specifically the Misoperations investigation and reporting standards. These other standards, as written today, are not clearly written as to the application and assumptions as to what is included in a protection system. 14. Trip coil Monitoring: If the trip coil is actually part of the DC circuitry, then why is there a differing (shorter) interval for this series connected element?
Response: The SDT thanks you for your comments. **1. The SDT invites additional participation to address such devices.** **2. There is no additional basis required for an entity to adopt the maximum allowable intervals established within the standard.** **3. The SDT has modified the standard to require that an entity also initiate correction of maintenance-correctable issues. There is no time-period specified for actually correcting maintenance-correctable issues in recognition of the wide variety of activities that may be represented.** **4a. The SDT has modified the standard in consideration of your comments concerning specific gravity not being applicable to non-sealed batteries. The**	

Organization	Question 10 Comment
	maintenance activities no longer include any reference to specific gravity. **4b. The SDT has modified the standard in consideration of your comments concerning specific gravity and internal temperature. The maintenance activity associated with specific gravity and internal temperature was removed from the revised standard.** **4c. Presently there are no other options that are available today to verify that a Ni-Cad battery can perform as designed.** **5. NERC standards establish minimum requirements, which can be expanded on by Regional Entities. This standard does NOT place any requirements upon the Regional Entity. BES is a defined NERC and Regional Entity term which applies uniformly to the various standards. The Records Retention section has been modified to read as follows:** The Transmission Owner, Generator Owner, and Distribution Provider shall each retain documentation of the two most recent performances of each distinct maintenance activity for the Protection System components, or to the previous on-site audit date, whichever is longer. **6. The SDT has modified the standard in consideration of your comment and the word, "Calendar" was added to clarify that the term "months" means "calendar months"** **7. The SDT has removed the cited requirement.** **8. The SDT has modified the standard in consideration of your comments concerning dc grounds (changed to "Check for unintentional grounds" and compliance FAQ II-5-I, (page 15) explains that the entity is responsible to determine if corrective actions are needed upon detection of unintentional dc grounds.** **9. Yes.** **10. The Tables have been modified to better delineate the specific activities related to components associated with UFLS/UVLS relays.** **11. The definition has been further modified to add these devices.** **12. Only to the degree that the Protection System operation for the natural fault verified the functions and "performed" the activities within the Table. See FAQ II-4-C, page 10 and Supplementary Reference Document, Section 15.3, page 22.** **13. The SDT, in accordance with the NERC Standard Development Procedure, analyzed all other uses of the defined term, "Protection System" within the NERC standards, and, in a document which was posted with the standard and other associated documents during the comment period, listed all other uses and concluded that there is no impact on the other uses. Reclosing relays are still not listed in the definition, but auxiliary relays, which previously were not listed and now are, were implicit in the previous "dc control circuits".** **14. The Tables have been modified to remove this shorter-interval specific activity.**
Green Country Energy LLC	None
Georgia System Operations Corporation	None.

Organization	Question 10 Comment
Operations and Maintenance	None.
ENOSERV	On Table 1A, the maximum time lengths are too long, especially for electro relays. A prime example is when testing a KD relay on a yearly basis and most of the time needs to be adjusted because of how far off it comes out. Allowing entities to take their time up to six calendar years may be too long.
Response: The SDT thanks you for your comments. See the Supplementary Reference Document, Section 5.1, page 7.	
Xcel Energy	Please clarify if the following are subject to PRC-005-2 requirements: 1) a battery that is in a station where the only BES element is a UFLS scheme 2) batteries used only to support communication elements (microwave houses)
Response: The SDT thanks you for your comments. **1) The SDT has modified the standard to clarify that the only DC Supply maintenance activity relevant to UFLS is to verify the DC supply voltage.** **2) The proper functioning of such batteries (communication system) will be addressed by the verification and monitoring of the communications system, and by addressing maintenance correctable issues related to the communications system. See FAQ II-5-K, page 15.**	
BGE	1. PRC-005-2R1 1.2 Identify whether each Protection System component is addressed through time-based, condition-based, performance-based, or a combination of these maintenance methods and identify the associated maintenance interval. Comment: The existing standard PRC-005-1 requirement R1.1 says a maintenance program must include the maintenance and testing intervals and their basis. PRC-005-2 does not have a similar requirement, and the associated FAQ indicates the standard "establishes the time-basis for a Protection System Maintenance Program to a level of detail not previously required". Does PRC-005-2 require evidence to support the basis for a defined maintenance interval, or is the basis now purely defined by PRC-005-2? 2. R2 Each transmission owner .....shall ensure the components to which condition-based criteria are applied....possess the necessary monitoring attributes? Comment: Depending on the evidence requirements that are enforced this could be a very large undertaking offsetting the benefit of extending intervals with CBM. It would be helpful to understand what the drafting team or other stakeholders would envision as appropriate evidence supporting this requirement. 3. R4 Each transmission owner .....shall implement its PSMP, including the identification of the resolution of all maintenance correctable issues as follows :4.1 ....within the maximum allowable intervals not to exceed those established in table 1a, 1b, 1c Comment: It's inferred that this requirement applies to maintenance correctable issues that are discovered as a consequence of scheduled maintenance and not as a consequence of monitoring or misoperations. If that inference is incorrect the requirement

Organization	Question 10 Comment
	imposes an unequal playing field for the resolution of known correctable issues depending on the monitoring being employed, not to mention an unreasonably long allowance for the correction of some serious problems. On the other hand, the requirement imposes an unreasonably short period of time for the resolution of some issues that may be associated with short interval maintenance/inspection intervals, such as battery grounds. 4. Section D1.4 Data Retention? The Transmission Owner shall...retain documentation for two maintenance intervals.... Comment: Recognizing that in order to achieve compliance PS owners will execute scheduled maintenance on shorter intervals than the maximum requirement it's uncertain what this means. Example: Max interval for instrument transformers is 12 years, we maintain every six. Is the requirement for 24 years of data or 12? It seems like there ought to be an upper limit. 24 years is a very long time. Table 1a Protection System Control Circuitry (Breaker trip coil only); 3 month maximum interval; verify the continuity....of the trip circuit.....except for breakers that remain open for the entire maintenance interval. Comments: What's the failure-probability justification for this requirement when other similar dc control components have a maximum interval of 6 years? It seems like the SDT made an assumption that all trip coils are monitored by red lights and could be verified by inspection and said somewhat arbitrarily, "do it because you can". "Remaining open for the entire maintenance interval" is a poorly reasoned effort to arrive at a necessary exception. Even if the red-light-through-the-trip-coil assumption is accurate for a normally open breaker, it's unreasonable to demand that an inspection take place if it's closed at anytime during the interval. The actual time that its closed might be seconds or a few minutes, but that time would make the exception moot and put the owner out of compliance. On the subject of three month maximum intervals in general: One can agree that three months is about the right time for some of these inspections, batteries in particular. However as written, three months and a day is "out of compliance". More flexibility would avoid a lot of meaningless "technical fouls". How about four times a year not more than four months between each...or something like that. 5. Table 1aStation DC supply (that has as a component any type of battery); verify that no dc supply grounds are present? Comment: All grounds are not created equal. No guidance for acceptance criteria is given, nor is evaluation/acceptance criteria explicitly made the responsibility of the battery owner (as it is for relay calibration). Without any guidance the requirement of "no" grounds is open to unreasonable interpretation (there is always a ground if one considers a high enough resistance) and high impedance grounds that do not present a risk to the PS will consume effort and attention unnecessarily. 6. Station DC supply (that has as a component any type of battery); Measure to verify that the specific gravity and temperature of each cell is within tolerance? Comment: It is not clear that a specific gravity test provides any better data concerning battery health than an impedance test, but specific gravity testing is a requirement. Can the impedance test be performed as routine maintenance in lieu of a specific gravity test? 7. General Comment: It is not clear whether Communications batteries should be held to the same testing/maintenance requirements as the station battery. Communications batteries are in place to supply relatively low power electronic equipment and do not have to provide energy to trip a breaker. Simple monitoring of the channel may be sufficient to assure battery

Organization	Question 10 Comment
	availability, and a less rigorous maintenance plan may be appropriate based on the continuous monitoring and low duty of the battery. 8. FAQ Group by Monitoring Level A level 2 (partially) monitored Protection System or an individual component of a level 2 monitored Protection System has monitoring and Alarm circuits on the Protection System components. The alarm circuits must alert a 24-hour staffed operations center. Comment: The standard Table 1b, General Description for Level 2 monitoring is simply described as Protection System components whose alarms are automatically provided daily (or more frequently) to a location where action can be taken for alarmed features. This appears to be a conflict between the FAQ and the standard. The more stringent requirement of the FAQ, for the reporting facility to be manned 24 hours per day, could be read to imply a requirement for a specific time to respond to an alarm. Is there such a requirement? Is there an implied requirement to document the alarm condition and the response time?
Response: The SDT thanks you for your comments. **1. If a time-based or condition-based program is used according to Tables 1a, 1b, and 1c, no additional basis is needed. If the entity elects to use Performance-based maintenance, the activities in Attachment A must be used to establish the related basis.** **2. See FAQ V-1-D, page 22 for a discussion relevant to your comment.** **3. The SDT has modified the standard in consideration of your concern concerning the interval of checking for unintentional dc grounds and the ability to remove the unintentional ground from the dc system. R4 of The SDT has modified the standard to require initiation of the resolution of maintenance-correctable issues, rather than to identify their resolution. See FAQ II-5-I, page 15.** **4. The data retention section has been modified to read as follows:** The Transmission Owner, Generator Owner, and Distribution Provider shall each retain documentation of the two most recent performances of each distinct maintenance activity for the Protection System components, or to the previous on-site audit date, whichever is longer. **5. Both the standard and FAQ document have been modified in consideration of your comments concerning dc grounds to specify that it is up to the owner to determine if corrective actions are needed for unintentional dc grounds. See FAQ II-5-I, page 15.** **6. The standard has been revised to remove maintenance activities related to specific gravity.** **7. Communication system batteries are not included in the requirements for "Station Batteries". The entity must ensure proper operation of the relay communications circuit which would include adequate maintenance of the equipment including the communication system batteries The proper functioning of such batteries (communication system) will be addressed by the verification and monitoring of the communications system, and by addressing maintenance correctable issues related to the communications system. (See FAQ II-5-K, page 15.)** **8. The FAQ has been modified to remove this apparent additional requirement.**	
Transmission Owner	Protection System Maintenance Program (PSMP)

Organization	Question 10 Comment
	a. The PSMP definition would be better defined if the first sentence was changed to “An ongoing program by which Protection System components are kept in working order and where malfunctioning components are restored to working order.” b. Please clarify what is meant by “relevant” under the definition of Upkeep. Should “relevant” be changed to “necessary”? c. The definition of Restoration would also be more explicit if changed to “The actions to return malfunctioning components back to working order by calibration, repair or replacement. d. Please clarify the definition of Restoration. For example, if a direct transfer trip system has dual channels for extra security even though only one channel is required to protect the reliability of the BES and one channel fails, must both be restored to be compliant? e. Protection System (modification) “Voltage and current sensing inputs to protective relays” should be changed to “voltage and current sensors for protective relays.” Voltage and current sensors are components that produce voltage and current inputs to protective relays. f. “Auxiliary relays” should be changed to “auxiliary tripping relays” throughout PRC-005-2, FAQ and the Draft Supplementary Reference. g. The word “proper” should be removed from the standard. It is ambiguous and should be replaced with a word or words that are clear and concise.

Response: The SDT thanks you for your comments.

a. The SDT does not believe that the suggested change is substantive, and sees no reason to make it.

b. Some updates may not affect the operation of the device as applied, and therefore are not relevant. “Necessary” would imply an additional level of review to determine whether the device would operate properly without the updates, while “relevant” simply implies that the update applies to the function.

c. The SDT does not believe that the suggested change is substantive, and sees no reason to make it.

d. The standard establishes that all components need to be fully maintained, and that they will function as designed. The SDT appreciates that some “restoration” activities may take an extended time to complete, but also contends that restoration to the designed condition is a vital element of maintenance.

e. The critical task is to verify that the proper representation of the primary current and voltage signals will get to the protective relays. The “Type of Protection System Component” has been modified in an effort to clarify.

f. “Auxiliary tripping relays” may exclude essential other internal Protection System functions. Therefore, the SDT declines to adopt this suggestion.

g. “Proper”, “working condition”, “correct”, etc, are all somewhat subjective terms that address the application-specific requirements related to the specific use. For example, one entity’s design standards may require that an electromechanical relay be within a 2% tolerance of the ideal operating characteristics, while another may only require that it be within 5%. Each of these is proper, correct, etc, for the application.

Organization	Question 10 Comment
Ohio Valley Electric Corp.	1. R1.2 seems to require owners to establish there own intervals and basis. Compliance with these requirements should be based on the intervals that are in tables 1a, 1b and 1c. 2. R4 implies that all maintenance correctible issues must be resolved within the Maintenance Activity Intervals. A diligent effort to restore proper function of a system should not be penalized if it does not fall within the prescribed maintenance interval.
Response: The SDT thanks you for your comments. **The SDT has modified the standard in consideration of your comment. The Parts of Requirement R1 were modified to read as follows:** 1.1. Identify all Protection System components. 1.2 Identify whether each Protection System component is addressed through time-based, condition-based, performance-based, or a combination of these maintenance methods and identify the associated maintenance interval. 1.3 For each Protection System component, include all maintenance activities specified in Tables 1a, 1b, or 1c associated with the maintenance method used per Requirement 1, Part 1.2. 1.4 Include all batteries associated with a Protection System in a time-based program. **2. The SDT has modified the standard to require INITIATION of resolution, not the actual resolution. The revised footnote reads as follows:** A maintenance correctable issue is a failure of a device to operate within design parameters that can not be restored to functional order by repair or calibration while performing the initial on-site maintenance activity, and that requires follow-up corrective action.	
E.ON U.S.	1. Recently, NERC made an interpretation on PRC-005-1 which stated that battery chargers were not to be included as part of the standard. This version of the standard seems to be in direct conflict with that interpretation, and for the reasons stated above E.ON U.S. recommends that battery chargers not be included in the standard. E.ON U.S. believes that capacity or AC impedance only needs to be done to determine service life, and therefore a periodic testing of station DC supply does not seem necessary or prudent. 2. Regarding the “Retention of Records”, retaining records of the latest test seems adequate. E.ON U.S. does not understand the point of retaining records for the past two test results. This is particularly true for equipment for which there are relatively long testing intervals, for example, 12 years. Retaining result documents from 24 years ago seems unnecessary and impractical. 3. With regard to NERC’s PRC-005-2 Supplementary Reference Section 2.4 on Applicable Relays, E.ON U.S. offers the following comments: 3.1. This section extends the applicable relay coverage to IEEE type # 86 and IEEE type # 94. Some utilities define their turbine trip relay as an IEEE type #94. E.ON U.S. interprets that the NERC scope of applicable relays is that the turbine trip relays would be excluded; however, it would further clarify this exclusion if it were mentioned as an example in the last sentence. 3.2. The Tables in proposed standard PRC-005-2 require additional clarity. E.ON U.S. suggests renaming tables to 1, 2 and 3 to

Organization	Question 10 Comment
	match Level 1, 2 and 3 monitoring. The wording and format of text is not consistent between tables. 3.3. The fields in the tables are incoherent. E.ON U.S. interpretation is that intervals and activities for UFLS and UVLS are different than other relay systems and components, but this is unclear. E.ON U.S. believes a separate table or sections for UFLS and UVLS would provide more clarity. 4. In section 7 of the Supplementary Reference the SDT refers to the Bulk Power System instead of the Bulk Electric System. These are not interchangeable and the SDT needs to explain the need to use the term in this case. The phrase "support from protection equipment manufacturers" is used several times in the technical reference (Section 8 and Section 13) yet there is no manufacturer represented on the SDT. Rather than developing one size fits all requirements applicable to all equipment, E.ON U.S. suggests that the SDT pursue comments from manufacturers to obtain recommendations on what they believe is required to maintain and test their equipment.
Response: The SDT thanks you for your comments. **1. Although this SDT team (as an Interpretation Drafting Team) drafted the recent NERC interpretation of Protection System as it is applied to PRC-005-1, the SDT believes that the charger is an integral portion of the Station DC supply; thus it has been added to the definition of Protection System by replacing "station batteries" in the current definition of Protection System to "station dc supply" in the definition for the proposed standard (PRC-005-2). The SDT disagrees with your contention that testing of the station dc supply is necessary; the station dc supply is a critical component of the Protection System, and it must be verified that it can perform its required function.** **2. A single record is not adequate to demonstrate that the equipment has been maintained according to the intervals.** **3.1. The SDT revised the Supplementary Reference to remove references to IEEE function numbers except where they are critical to the discussion.** **3.2. The SDT believes that it is actually a single table with multiple sections and has retained the table numbering. The SDT has worked to improve the consistency between the table sections.** **3.3. The tables have been revised to clarify this area.** **4. The Supplementary Reference Document has been modified to use the NERC-defined term of "Bulk Electric System" or its defined abbreviation BES, rather than "Bulk Power System" or BPS. As for manufacturer input, the SDT is concerned that it would be a violation of NERC Anti-Trust rules to seek input from manufacturers.**	
Duke Energy	Regarding the Implementation Plan, 1. R1 compliance should be the first day of the first calendar quarter 18 months following applicable regulatory approvals. Entities will need this time to change monitoring equipment and develop extensive new work practices and procedures to assure time frames and documentation of practices comply with the wording of the revised standard. 2. The time frames for R2, R3 and R4 are adequate except in cases where upgrades have to be developed and implemented in

Organization	Question 10 Comment
	order to be able to meet the intervals (such as breaker trip coil verification every three months). 3. FAQ 2C "If I am unable to complete the maintenance as required due to a major natural disaster, how will this effect my compliance with the standard." Response is the Compliance monitor will consider extenuating circumstances? We would like to see this statement clarified as to the time frame extensions that result in non compliance or fines. 4. R4 States "each transmission owner" shall implement its PSPM, including identification of the resolution of all maintenance correctable issues. If the intent is to document resolution to misoperations this is a reasonable request. If the intent is to document that a relay was found out of calibration on a routine test, which was corrected by recalibration we need some clarity on expectations of how that would be recorded and tracked. As written this statement is vague and somewhat confusing since % of allowable error may vary utility to utility. R4 doesn't appear to allow any time beyond the stated intervals for repairs or replacements that may take additional time. PRC-005-2 is maintenance and testing standard, and R4 inappropriately requires a replacement strategy and an obsolescence strategy. Is R4 intended to apply to all equipment in Table 1?
Response: The SDT thanks you for your comments. **1. The SDT believes that time provided for R1 is sufficient. Additionally, entities can use the time required for NERC Board of Trustees and regulatory approvals to work on implementation.** **2. The SDT believes that the times provided for R2, R3, and R4 are adequate.** **3. The specific issues of how the Compliance Enforcement Authority would address this issue is outside the scope of the SDT. The response in the FAQ (FAQ IV-2-D, page 23) is extracted directly from the NERC Sanction Guidelines (effective January 15, 2008)** **4. The SDT has modified the standard to require initiation of the resolution of maintenance-correctable issues that cannot be resolved during the on-site maintenance; this is focused on assuring that the Protection System is capable of performing its desired function. R4 is intended to apply to ALL equipment in the PSMP.**	
Northeast Power Coordinating Council	1. Requirements 4.2.5.4 and 4.2.5.5 require clarification. It is recommended that the drafting team provide a schematic diagram to provide clarity as to which generator and system connected transformers are included in this facility identification. 2. When Measures are added to the Standard, the SDT must consider how the owner will be required to assess and document the decision of which table will apply to each protection. While this is a compliance element, the standard should provide clarity on this matter. As written, the requirement does not seem to be measurable. 3. Requirement R4 requires clarification on what is meant by "including identification of the resolution of all maintenance correctible issues as follows:" Correctible issues should not be combined in the same sentence with the layout of the tables. 4. Table 1b: In the section for "Protection system communication equipment and channels", there needs to be clarification on "verify that the performance of the channel and the quality of the channel meets the performance criteria, such as via measurement of signal level, reflected power, or data error rate." This may be done as a pass fail test during trip checks. If the

Organization	Question 10 Comment
	communication line successfully sends proper signals for the trip checks, then the communication line is acceptable and no additional measurement are taken. 5. Table 1c: There is some confusion on what is expected on items that have a Maximum Maintenance Interval reported as "Continuous". For example, a component in the "Protection System telecommunication equipment and channels" how would one provide documentation or proof of the continuous verification of the two items listed in the maintenance activities" In other words how does one prove "Continuous verification of the communication equipment alarm system is provided" and "Continuous verification that the performance and the quality of the channel meet the performance criteria is provided". These activities appear to be "monitoring attributes" more so than they are maintenance activities. 6. Additionally, the Continuous "Maximum Maintenance Interval" needs clarification because • the interval is a monitoring interval and not a maintenance interval • a strict interpretation of "Continuous" could require redundant monitoring systems be installed or locations staffed by personnel to monitor equipment in the event remote monitoring capabilities are unavailable • It is unclear how to provide proof to an auditor that continuous monitoring has occurred over a given interval? 7. Table 1a, 1b, and 1c: The maintenance activity for battery chargers are to perform testing of the charger at full rated current and verify current-limit performance. The drafting team should provide an industry standard as how to perform this check, or specify an industry equivalent test. 8. The Table 1b Level 2 Monitoring Attributes for Component "Monitoring and alarming of continuity of trip coil(s)" should be changed to read "Monitoring and alarming of continuity of all DC circuits including the trip coil(s)". The present wording is confusing and can be interpreted to mean that the DC control circuitry needs to be checked every 12 years, as opposed to what we perceive to be the intended 6 years. 9. The Maintenance Activities in Table 1c are not consistent with the Level 3 Monitoring Attributes for Component "Protection system telecommunications equipment and channels." 10. "Continuous verification of interface to protective relays" should be added as a third activity should be added under the Maintenance Activities column." 11. In Section A. Introduction, 4.2.4 should be made to read "Protection System components which are installed as a Special Protection System for BES reliability. 12. For Requirement 4.1, a "grace period" similar to the NPCC criteria should be considered in case it is not possible to obtain any necessary outages to get the prescribed maintenance done. 13. Requirement R1 should be modified to read "Each Transmission Owner, Generator Owner, and Distribution Provider shall develop, document, and implement a Protection System Maintenance Program (PSMP) for its Protection Systems that use" This

Organization	Question 10 Comment
	revision reinforces what is necessary to ensure proper compliance with the program. 14. "The standard has multiple component tests required at different and conflicting intervals, some interdependent. Preference is to have the component listed with a common maintenance and testing interval assigned (list the testing required at 2, 4 and 6 years). This same interval should apply to all areas in the table." 15. Life span of PC's, software and software license's are much less than 12 years or asset life. This presents a problem during an audit where proof is required. The components in modern relays have not been proven over these extended time periods, users are dependent on proper functions of the alarm output of IED's. Prefer more frequent maintenance cycles over having to continuously document proof of a robust CBM or PBM program. 16. The burden placed to provide proof of compliance with a CBM or PBM maintenance program seems to outweigh any benefit in maintenance costs or reliability.

Response: The SDT thanks you for your comments.

1. Figure 2 in the Supplementary Reference Document (page 28) illustrates generator-connected and system-connected station service transformers. Additionally, 4.2.5.4 and 4.2.5.5 (in the Applicability section) further state, "for generators that are part of the BES", which must be taken in the context of the Regional Entity BES definition.

2. It is beyond the scope of a standard to require specific documentation; the entity must determine what documentation is necessary to clearly demonstrate that they are meeting the requirements. FAQ V-1-D, page 30 provides a discussion to assist in this determination.

3. The footnote for R4 has been modified to read as follows: A maintenance correctable issue is a failure of a device to operate within design parameters that can not be restored to functional order by repair or calibration while performing the initial on-site maintenance activity, and that requires follow-up corrective action.

4. A functional test only proves that the communication equipment is working. Table 1b requires that the performance criteria, such as signal levels, reflected power, etc are verified against the original performance criteria established when the channel was commissioned. See FAQ II-6-D, page 17.

5. For items with a maximum maintenance interval of "continuous", no activities are required, and the specified activities acknowledge that the monitoring of the component IS addressing the maintenance of the component.

6. The general information within the Table describes the attributes needed to achieve the Level 3 monitoring, and R2 requires that the entity establish a basis for the components to be addressed within Table 1c. Supplementary Reference Document, Sections 13 and 14 (page 20) provide discussion on this, and the Decision Trees in the FAQ and FAQ IV-1-A, page 21 also discuss this.

7. The SDT has modified the standard to remove this requirement in consideration of your comments.

8. The SDT has modified the standard to remove this requirement in consideration of your comments.

9. Table 1c has been modified to improve the consistency.

10. The SDT is not clear as to what you are suggesting.

Organization	Question 10 Comment
11. The SDT has modified the standard in consideration of your comment. As revised, 4.2.4 reads as follows: Protection System components installed as a Special Protection System for BES reliability. **12. The SDT is concerned that a "grace period", if permitted, would be used to establish a de-facto longer interval, and that the established intervals would thus not be measurable. Additionally, FERC Order 693 directed that NERC establish maximum maintenance intervals, and allowing for a "grace period" would not conform to this directive.** **13. Documentation is a matter of demonstrating compliance, not of meeting the technical requirements of the Standard. R4 specifies the implementation of the PSMP.** **14. The testing specified for many components is different for the varying intervals; therefore, a separate table entry is present for each distinct interval. For the most part, the intervals are multiples of each other, (3-months, 18-months, 3-years, 6-years, and 12-years).** **15. Entities are certainly free to perform maintenance more frequently than specified in the standards.** **16. Entities do not have to adopt CBM or PBM; the entity must decide if the benefits of such programs justify the additional administrative effort.**	
Saskatchewan Power Corporation	1. Saskatchewan recommends that the PC's and RC's designate what equipment is applied to protect the BES and should be included in the protection maintenance program. It is questionable whether the facility owners or Distribution Providers will know. 2. What are the impacts on the BES from the protection systems identified in Facilities 4.2.5 and the FAQ? For example there is an impact on the BES from generator under-frequency protection not being properly coordinated, but assuming it is and if it is not maintained isn't the impact to the unit itself? Inadvertent energization protection also seems to be an impact to the unit itself not the BES? The standard should be concerned with protection systems that impact the BES not equipment protection that has localized impacts however important they may be. 3. Change Facilities 4.2.2 to "Protection System components used for under-frequency load-shedding systems which are installed to prevent system under-frequency collapse for BES reliability." The reference to ERO is unnecessary and inappropriate.
Response: The SDT thanks you for your comments. **1. The SDT disagrees. This standard applies to Protection Systems applied on, or that are designed to provide protection for the BES as defined by the Regional Entities.** **2. Fundamentally, if a system component is part of the BES, the protection on that component indeed affects the BES.** **3. The SDT believes that this Applicability is correctly stated in the standard. This directly reflects the current PRC-008-1 standard.**	
Detroit Edison	1. Suggest that the term "alarmed failures" in the table headings be changed to "alarmed abnormalities" to better indicate that the monitored parameter may be in an abnormal state or out of range but not necessarily failed. 2. Does "system-connected" station service transformers refer to transformers connected to the BES or transformers connected to

Organization	Question 10 Comment
	a system at any voltage level? 3. Is the intent of R1.1.2 that each Protection System component (specific relay at specific location) be listed individually with its associated maintenance method and interval or can the general component category be listed as such? 4. Regarding R4, further clarification would be helpful in understanding the intent of the term "resolution of all maintenance correctible issues" as it applies to R4.1 and R4.2. Is it intended that "maintenance correctible issues" be completed within the interval? 5. It is recommended that each line in the tables be given a number or letter designation to make reference to that row easier.
Response: The SDT thanks you for your comments. **1. The SDT understands your comment, and has elected to leave the terminology in the standard unchanged. While "failure" is not a defined term within the standard, the 11th Edition of Merriam Webster's Collegiate Dictionary includes, within the definition of failure, several relevant applications of this term, including "an omission of occurrence or performance", "a failing to perform a duty or expected action", "a state of inability to perform a normal function", and "an abrupt cessation or normal functioning".** **2. This phrase refers to generation plant station-service transformers connected at any voltage level, provided that the generator is part of the BES.** **3. This depends on the description of your program. You will need to describe your program in a way that will satisfy the requirements of the Standard.** **4. The SDT has modified the standard to require initiation of the resolution of maintenance-correctible issues, with no specific time-frame on completing the resolution.** **5. The SDT thanks you for your suggestion. This has been considered several times during the development of the tables, and several different arrangements attempted, and the SDT believes that the current presentation is the most effective way to present this complex material. The SDT will, however, continue to consider suggestions to improve this.**	
SERC (PCS)	The "zero tolerance" structure proposed combined with the large volume and complexity of Protection System components forces an entity to shorten their intervals well below maximum. We instead propose a calendar increment carryover period in which a small percentage of carryover components would be tracked and addressed. For example, up to 1% of an entity's communication channel 6 year verifications could carryover into the next year. These carryover components would be addressed with high priority in that next calendar increment. There are many barriers to 100% completion or zero tolerance. Some utilities have over ten thousand components.
Response: The SDT thanks you for your comments. The SDT is concerned that a "grace period", if permitted, would be used to establish a de-facto longer interval, and that the established intervals would thus not be measurable. Additionally, FERC Order 693 directed that NERC establish maximum maintenance intervals, and allowing for a "grace period" would not conform to this directive.	

Organization	Question 10 Comment
Electric Market Policy	1. The "zero tolerance" structure proposed within this standard combined with the large volume and complexity of Protection System components requires a utilities processes and built-in grace periods to perform to perfection. Although this is a worthy goal for our industry, this can result in a large number of non-compliances for minor documentation issues or slightly missed maintenance schedules on an insignificant percentage of relays. The processing of these non-compliances can be costly in terms of resources that could be better utilized to address other transmission reliability matters. To provide a better approach, we suggest an incremental carryover system be permitted that would allow up to 0.5 percent of the PRC-005 maintenance task to be carried over to the next period, provided they are random events (not repetitive). As an example, a small percentage of our Protective System Control Trip tests on a 6-year interval could be carried over into the next calendar year when a generator outage is rescheduled. With this provision, these few tests could be handled without risk of a generator trip and without a compliance consequence. These carryover tasks could be addressed through an action plan with a defined completion date, and could be documented through a regional web portal. There are many barriers to 100% completion at a zero tolerance level with this volume of tasks.
Response: The SDT thanks you for your comments. The SDT is concerned that a "grace period", if permitted, would be used to establish a de-facto longer interval, and that the established intervals would thus not be measurable. Additionally, FERC Order 693 directed that NERC establish maximum maintenance intervals, and allowing for a "grace period" would not conform to this directive.	
Oncor Electric Delivery	1. The drafting team is to be commended for taking the Technical Paper and Draft Standard that was prepared by the NERC System Protection and Control Taskforce (SPCTF) and the recommendations of the SAR drafting team to create PRC-005-2. This draft standard allows the owners of Protection Systems several options in establishing a maintenance program tailored to their equipment and the topography of their system.
Response: The SDT thanks you for your support.	
US Bureau of Reclamation	The significance of this issue is not reflected in the period of time needed to review the documents. The supplement has many good ideas; however, the concept is going further than needed for establishing consistent maintenance intervals.
Response: The SDT thanks you for your comments. The NERC Standard Development Process normally allows for only 30-day or 45-day comment postings. The SDT intends to continue to use only the 45-day posting period of these in recognition of the extensive material to review.	
RRI Energy	1. The standard was written to implement generally accepted practices, but has developed requirements that are overly prescriptive relative to what will be required to demonstration compliance. The standard should not assume the need to write all aspects of a maintenance program into the standard or that maintenance programs will only consist of the standard requirements. Protection systems of the BES have and will continue to perform very reliably with the basic elements of a maintenance program without the need to divert resources for the development of excessive documentation to demonstrate compliance. PRC-005-1 is the most violated standard in the industry; not because of the lack of maintenance to protection systems, but because the

Organization	Question 10 Comment
	documentation requirements of the standard, given the large magnitude of components that fall within the scope of the standard. This standard significantly increases the administrative burden for additional documentation, without corresponding improvements to the reliability of the BES. 2. Recommend rewording A.4.2.5.1 as follows: "Generator Protection system components that trip the generator circuit breakers to separate and isolate the generator from the BES either directly in the breaker trip coil circuit or through interposing lockout or auxiliary tripping relays." This document should not expand the compliance scope beyond the definition of the BES. The generator protection systems that "trip the generator" also perform additional control functions that extend beyond the electrical isolation of the generating unit from the BES. These additional circuits do not protect the BES and do not belong in the scope of this document. 3. Recommend rewording A.4.2.5.4 as follows: "Protection systems for generator-connected station service transformers that trip the generator circuit breakers to separate and isolate the generator from the BES." This document should not expand the compliance scope beyond the definition of the BES. Related protection circuits of the transformer not involved with the electrical isolation of the generating unit from the BES does not belong in the scope of this document. 4. Recommend rewording A.4.2.5.5 as follows: "Protection systems for BES elements connecting to the station service transformers of generating stations." This document should not expand the compliance scope beyond the definition of the BES. The requirement incorporates radial feeds (with dedicated breakers) into the scope of the standard that are not necessarily a part of the BES as defined by some RRO's. Station service transformers are not necessarily required for generating unit operation. In some cases there are redundant sources for startup or back-up power. Protection of these transformers does not belong in the scope of the standard if they are not a part of the BES. 5. The suggested rewording of R1.2 is as follows: "Identify whether each Protection System component is addressed through time-based, condition-based, performance-based, or a combination of these maintenance methods." The requirement for the registered entity to list the interval of maintenance does not belong in the standard, especially since the maximum intervals are listed in the standard tables. The registered entity may have internal documents that intentionally target a shorter duration than the maximum interval of Table 1a. The failure to meeting those internally established targets can be a violation of the standard by the wording of this requirement. Allow R4 of the standard to identify the maximum allowable intervals. 6. In R4, the requirement for "identification of the resolution of all maintenance correctible issues" should be separated from the maintenance intervals; which define the maximum intervals of maintenance activities. The requirement should be eliminated to remove the overly prescriptive requirements of auditable documentation. If retained, a rewording of the requirement is as follows: "Each Transmission Owner, Generator Owner, and Distribution Provider shall identify the resolution of all issues identified and not corrected at the time the maintenance is initiated and the protected element is returned to service." The documented resolution of maintenance correctible issues (if retained) should apply only to activities that are unresolved and incomplete during the normal maintenance process. The standard should not micromanage the documentation process by creating requirements for excessive auditable records needed to demonstrate compliance of routine maintenance activities. 7. In R4, the requirements for Generator Owners which establish the durations of maximum allowable intervals should be

Organization	Question 10 Comment
	separated from the Transmission Owners, even if the intervals are the same. The reason is to allow for the assignment of different Violation Risk Factors. The Violation Risk Factor for the application of a 20 MVA generating unit with an operating capacity factor of less than 5%, and connected to a 138 kV system, should not be the same as those applied to a 500kV transmission line. The violation risks factors for these two applications are significantly different, and the ability to recognize this is not permitted by the standard presently. 8. Similarly, the criteria used for the sizing of station batteries for a large generating station is very different than those used for transmission facilities. Very little of the generating station battery sizing is related to BES protection, and nearly all generator protection system operations occur without reliance upon the battery. Without NERC standard requirements, Generator Owners have their own natural incentives to maintain batteries for the protection of the turbine generator bearings on the loss of AC power. With the most basic requirements of an inspection and maintenance program, there is an extremely high degree of reliability given the typical design of DC systems within a generating station, even without documented compliance to a rigid set of standards. With very basic, elementary maintenance (documented or not), the statistical probability for the random and simultaneous failure of multiple battery cells to disable the protection system of a generating station for the milliseconds of time required to separate a generating unit from the BES is insignificant (well in excess of 1 billion to 1 across an entire calendar quarter). 9. Violation risk factors and the resulting penalties for non-compliance need to be realistic.

Response: The SDT thanks you for your comments.

1. The SDT believes that the level of prescription within the standard is necessary to satisfy the guidance in FERC Order 693, and also to address observations from the Compliance Monitoring entities (the Regional Entities and NERC) that PRC-005-1 is excessively general. FERC Order 672 also specifies that NERC Reliability Standards should be clear and unambiguous. The SDT has therefore defined the minimum activities necessary to implement an effective PSMP.

2. The SDT believes that the standard is correct as drafted. Not only does the generator need to be disconnected, but this BES component must also be protected. Please refer to FAQ III-2-A, page 20 for a discussion of relevant Protection System components.

3. A loss of a generator-connected station auxiliary transformer will result in a loss of the generating plant if the plant is being provided with auxiliary power from that source.

4. A loss of a system-connected station auxiliary transformer could result in a loss of the generating plant if the plant was being provided with auxiliary power from that source, and this auxiliary transformer may directly affect the ability to start up the plant and to connect the plant to the system.

5. Inclusion of the intervals is necessary for PBM, and entities may elect to commit to more demanding intervals because of their experience.

6. The SDT has modified the standard to require initiation of the resolution of maintenance-correctible issues, but establishes no time line for the actual resolution, in recognition of the wide variation in the type of problems and the scale of the resolution.

7. The SDT disagrees. It the protection on the cited 20 MVA generating unit fails to properly isolate the unit from the system for fault conditions, it could have serious effects on reliability.

Organization	Question 10 Comment
8. The SDT believes that the station dc supply is such an integral part of the Protection System of a generating station that, it falls under NERC Reliability Standard purview and at a minimum must be maintained using the Maintenance Activities and Maximum Maintenance Intervals of Table 1. **9. The SDT will consider this with developing VRFs and VSLs.**	
Lower Colorado River Authority	We commend the work done by the SDTSDT. In particular, the merging of previous standards PRC-005-0, PRC-008-0, PRC-011-0, and PRC-017-0 which will help with the efficient management of these standards.
Response: The SDT thanks you for your support.	
Ontario Power Generation	We note that Verification of Voltage and Current Sensing Device Inputs to Protective Relays is a somewhat ambiguous activity. NERC's audit observation team came up with a similar finding. The supporting documents provide some clarity but in our opinion it would be helpful if the SDT could elaborate this activity in more detail in the Table itself.
Response: The SDT thanks you for your comments. The Tables have been modified to clarify this issue.	
Southern Company	1. We presently utilize a UFLS system distributed across many transmission and distribution substations. Are the station batteries located in stations with no network transmission protection schemes (other than UFLS) subject to the requirements of PRC-005-2? This was not addressed in previous revisions. 2. We presently utilize a UVLS system distributed across many transmission and distribution substations. Are the station batteries located in stations with no network transmission protection schemes (other than UVLS) subject to the requirements of PRC-005-2? 3. In the applicability section, there is no exception for smaller units and those with very low capacity factors. Rather, those that "are part of the BES" are in the scope. We recommend that smaller units and low capacity factor units be exempt from the requirements of this standard or have extended maintenance intervals. Refer to the current SERC supplement for PRC-005-1. Section II.A. of the May 29, 2008: SERC Supplement Maintenance & Testing Protection Systems (Transmission, Generation, UFLS, UVLS, & SPS) NERC Reliability Standards PRC-005-1, PRC-008, PRC-011, & PRC-017.The applicability section paragraph 4.2.4 should read "are installed" rather than "is installed". 4. Note 2 at the bottom of the table (1c) implies that one has to apply voltage and inject current into the microprocessor relay to perform trip checks. Is this the intent of the statement? If so, Note 2 should be revised to make clear the intention. We don't think this is necessary with microprocessor relays since they monitor inputs 5. Why is the Violation Severity Level Matrix not a part of this standard revision? 6. In cases where a common dc system exists between a generator owner and transmission owner, who is the responsible entity? 7. We appreciate the work that went into the implementation plan. We agree with the concept of phasing in mandatory compliance

Organization	Question 10 Comment
	and the timing of the implementation. 8. Consider defining the Monitoring Levels once and reformatting the information contained within Tables 1a, 1b, and 1c to regroup the information by component type rather than by Monitor Level. When considering the various monitoring levels for the protection system components, each entity will consider each component type apart from the others when determining the Monitor Level to apply, so this reorganization will assist the end user to understand and apply the levels. See samples attached as a separate document:
Response: The SDT thanks you for your comments. **1. The SDT has modified the standard to clarify that the only DC Supply requirement relevant to UVLS and UFLS is to verify the DC supply voltage, and that this may be performed in conjunction with the UFLS/UVLS maintenance itself.** **2. The SDT has modified the standard to clarify that the only DC Supply requirement relevant to UVLS and UFLS is to verify the DC supply voltage, and that this may be performed in conjunction with the UFLS/UVLS maintenance itself.** **3. This is properly a NERC registration issue and one of the regional BES definitions. We appreciate that you may disagree with these, but you should seek resolution via other means. The SDT has modified the standard in consideration of your editorial concern. It the protection on a small generating unit fails to properly isolate the unit from the system for fault conditions, it could have serious effects on reliability.** **4. Note 2 has been removed from the Table.** **5. Even though the SDT worked on a VSL matrix during development of this draft, the SDT elected to constrain this posting only to the requirements and supporting developments. The SDT believes that this was such an extensive body of material that it would be distracting to include compliance elements. The SDT also recognized that extensive changes were likely to occur to the standard in response to this posting, and considered this in their decision to not include compliance elements. They will be included in the next posting.** **6. The SDT believes that the owner of the battery is responsible. This can be worked out by agreements between the entities.** **7. The SDT thanks you for your support.** **8. The SDT has experimented with various arrangements of the Tables with some input from external parties, and believes that the presentation shown in the standard is the best way to present this complex information. The SDT has attempted to make the arrangement of the three tables as similar as possible to address your concern.**	
PacifiCorp	What is the definition of "Calendar Year"? Does the term "Six calendar years" include any date in 2004 to any date in 2010?
Response: The SDT thanks you for your comments. Disregard the complete date and just look at the year portion. For a 6 calendar-year interval, if the test date was IN 2004, the next test must be completed by the end of 2010.	

Organization	Question 10 Comment
AECI	
Puget Sound Energy	Great improvement in the standards and clarity of expectations. We appreciate the combining of the multiple PRC standards. PSE would appreciate the comments and clarification needed regarding the interpretation for PRC-005 under Project 2009-17 to be included in PRC-005-2. It appears that the interpretation allowed regions to define variances due to the variance in the Regional Entity definitions of the BES. But how the BES is defined and documented as such creates ongoing confusion for the registered entities.
Response: The SDT thanks you for your comments. The NERC definition for BES specifically includes, "As specified by the regions". As long as this definition persists, the issue noted in your comments will also persist. It is outside the scope of this standard to address these issues.	

NERC
NORTH AMERICAN ELECTRIC RELIABILITY CORPORATION

Consideration of Comments on 2nd Draft of the Standard for Protection System Maintenance and Testing Project 2007-17

The Protection System Maintenance and Testing Standard Drafting Team thanks all commenters who submitted comments on the 2nd draft of the PRC-005-2 standard for Protection System Maintenance and Testing. This standard was posted for a 45-day public comment period from June 11, 2010 through July 16, 2010. The stakeholders were asked to provide feedback on the standards through a special Electronic Comment Form. There were 58 sets of comments, including comments from more than 130 different people from over 70 companies representing 8 of the 10 Industry Segments as shown in the table on the following pages.

Many commenters objected to the establishment of maximum allowable intervals and offered comments on most of the individual activities and intervals within the Tables.

- The SDT responded that "FERC Order 693 and the approved SAR assigned the SDT to develop a Standard with maximum allowable intervals and minimum maintenance activities."

To provide more clarity, the SDT completely rearranged and revised the Tables.

- The Tables now consist of one table for each of the five Protection System component types, as well as a sixth table to address monitoring and alarming requirements to support extended intervals for monitored Protection System components.

Many commenters disagreed with some of the VRF and VSL assignments.

- The SDT made several modifications to the VRFs and VSLs that are in-keeping with the guidance provided by NERC and FERC.

Other comments were offered regarding Time Horizons, resulting in modification of the Time Horizons for both R3 and R4 from Long-Term Planning to Operations Planning.

In response to suggestions relative to the Measures, the SDT made changes to all four Measures.

Commenters were appreciative for the information contained in the two reference documents, but indicated a preference for some of the information to be included within the body of the Standard.

- In response, the SDT included the definitions of those terms exclusive to this standard, specifically "component type", "component", "segment", "maintenance correctable issue", and "countable event", within the Standard.

In this report, comments have been organized by question number. Comments can be viewed in their original format on the following web page:
http://www.nerc.com/filez/standards/Protection_System_Maintenance_Project_2007-17.html

If you feel that your comment has been overlooked, please let us know immediately. Our goal is to give every comment serious consideration in this process! If you feel there has been an error or omission, you can contact the Vice President and Director of Standards, Herbert Schrayshuen, at 609-452-8060 or at herb.schrayshuen@nerc.net. In addition, there is a NERC Reliability Standards Appeals Process.[1]

[1] The appeals process is in the Reliability Standards Development Procedures: http://www.nerc.com/standards/newstandardsprocess.html.

Index to Questions, Comments, and Responses

1. The SDT has made significant changes to the minimum maintenance activities and maximum allowable intervals within Tables 1a, 1b, and 1c, particularly related to station dc supply and dc control circuits. Do you agree with these changes? If not, please provide specific suggestions for improvement. 13

2. The SDT has included VRFs and Time Horizons with this posting. Do you agree with the assignments that have been made? If not, please provide specific suggestions for improvement. 75

3. The SDT has included Measures and Data Retention with this posting. Do you agree with the assignments that have been made? If not, please provide specific suggestions for improvement. 84

4. The SDT has included VSLs with this posting. Do you agree with the assignments that have been made? If not, please provide specific suggestions for change. 100

5. The SDT has revised the "Supplementary Reference" document which is supplied to provide supporting discussion for the Requirements within the standard. Do you agree with the changes? If not, please provide specific suggestions for change. 116

6. The SDT has revised the "Frequently-Asked Questions" (FAQ) document which is supplied to address anticipated questions relative to the standard. Do you agree with these changes? If not, please provide specific suggestions for change. 129

7. If you have any other comments on this Standard that you have not already provided in response to the prior questions, please provide them here. 143

The Industry Segments are:

1 — Transmission Owners
2 — RTOs, ISOs
3 — Load-serving Entities
4 — Transmission-dependent Utilities
5 — Electric Generators
6 — Electricity Brokers, Aggregators, and Marketers
7 — Large Electricity End Users
8 — Small Electricity End Users
9 — Federal, State, Provincial Regulatory or other Government Entities
10 — Regional Reliability Organizations, Regional Entities

		Commenter	Organization	Industry Segment									
				1	2	3	4	5	6	7	8	9	10
1.	Group	Joseph DePoorter	MRO's NERC Standards Review Subcommittee (NSRS)										X

	Additional Member	Additional Organization	Region	Segment Selection
1.	Mahmood Safi	OPPD	MRO	1, 3, 5, 6
2.	Chuck Lawrence	ATC	MRO	1
3.	Tom Webb	WPSC	MRO	3, 4, 5, 6
4.	Jason Marshall	MISO	MRO	2
5.	Jodi Jenson	WAPA	MRO	1, 6
6.	Ken Goldsmith	ALTW	MRO	4
7.	Dave Rudolph	BEPC	MRO	1, 3, 5, 6
8.	Eric Ruskamp	LES	MRO	1, 3, 5, 6
9.	Joseph Knight	GRE	MRO	1, 3, 5, 6
10.	Joe DePoorter	MGE	MRO	3, 4, 5, 6
11.	Scott Nickels	RPU	MRO	4
12.	Terry Harbour	MEC	MRO	6, 1, 3, 5

	Commenter	Organization	Industry Segment									
			1	2	3	4	5	6	7	8	9	10
13.	Carol Gerou	MRO MRO 10										
2. Group	Guy Zito	Northeast Power Coordinating Council										X

	Additional Member	Additional Organization	Region	Segment Selection
1.	Alan Adamson	New York State Reliability Council, LLC	NPCC	10
2.	Gregory Campoli	New York Independent System Operator	NPCC	2
3.	Kurtis Chong	Independent Electricity System Operator	NPCC	2
4.	Sylvain Clermont	Hydro-Quebec TransEnergie	NPCC	1
5.	Chris de Graffenried	Consolidated Edison Co. of New York, Inc.	NPCC	1
6.	Gerry Dunbar	Northeast Power Coordinating Council	NPCC	10
7.	Ben Eng	New York Power Authority	NPCC	4
8.	Brian Evans-Mongeon	Utility Services	NPCC	8
9.	Dean Ellis	Dynegy Generation	NPCC	5
10.	Brian L. Gooder	Ontario Power Generation Incorporated	NPCC	5
11.	Kathleen Goodman	ISO - New England	NPCC	2
12.	David Kiguel	Hydro One Networks Inc.	NPCC	1
13.	Michael R. Lombardi	Northeast Utilities	NPCC	1
14.	Randy MacDonald	New Brunswick System Operator	NPCC	2
15.	Bruce Metruck	New York Power Authority	NPCC	6
16.	Chantel Haswell	FPL Group	NPCC	5
17.	Lee Pedowicz	Northeast Power Coordinating Council	NPCC	10
18.	Robert Pellegrini	The United Illuminating Company	NPCC	1
19.	Saurabh Saksena	National Grid	NPCC	1
20.	Michael Schiavone	National Grid	NPCC	1

	Commenter	Organization	Industry Segment									
			1	2	3	4	5	6	7	8	9	10
21. Peter Yost		Consolidated Edison Co. of New York, Inc. NPCC 3										
22. Si Truc Phan		Hydro-Quebec TransEnergie NPCC 1										
3.	Group	Steve Alexanderson	Pacific Northwest Small Public Power Utility Comment Group		X	X						

	Additional Member	Additional Organization	Region	Segment Selection
1.	Russ Noble	Cowlitz PUD	WECC	3, 4, 5
2.	Dave Proebstel	Clallam County PUD	WECC	3
3.	John Swanson	Benton PUD	WECC	3
4.	Steve Grega	Lewis County PUD	WECC	3, 4

4.	Group	Margaret Ryan	PNGC Power		X					X		

	Additional Member	Additional Organization	Region	Segment Selection
1.		Blachly-Lane Electric Cooperative	WECC	3
2.		Central Electric Cooperative	WECC	3
3.		Clearwater Electric Cooperative	WECC	3
4.		Consumer's Power Company	WECC	3
5.		Coos-Curry Electric Cooperative	WECC	3
6.		Douglas Electric Cooperative	WECC	3
7.		Fall River Electric Cooperative	WECC	3
8.		Lane Electric Cooperative	WECC	3
9.		Lincoln Electric Cooperative	WECC	3
10.		Lost River Electric Cooperative	WECC	3
11.		Northern Lights Electric Cooperative	WECC	3
12.		Okanogan Electric Cooperative	WECC	3
13.		Raft River Electric Cooperative	WECC	3

		Commenter	Organization	Industry Segment									
				1	2	3	4	5	6	7	8	9	10
14.		Salmon River Electric Cooperative	WECC 3										
15.		Umatilla Electric Cooperative	WECC 3										
16.		West Oregon Electric Cooperative	WECC 3										
17.		PNGC	WECC 8										
5.	Group	Dave Davidson	Tennessee Valley Authority	X				X					

	Additional Member	Additional Organization	Region	Segment Selection
1.	Russell Hardison	TOM Support Manager	SERC	
2.	Pat Caldwell	TOM Support	SERC	
3.	David Thompson	GO	SERC	
4.	Jim Miller	GO	SERC	

6.	Group	Denise Koehn	Bonneville Power Administration	X		X		X	X				

	Additional Member	Additional Organization	Region	Segment Selection
1.	Dean Bender	BPA, Tx SPC Technical Svcs	WECC	1
2.	John Kerr	BPA, Tx Technical Operations	WECC	1
3.	Mason Bibles	BPA, Tx Sub Maint and HV Engineering	WECC	1
4.	Laura Demory	BPA, Tx PSC Technical Svcs	WECC	1

7.	Group	Kenneth D. Brown	Public Service Enterprise Group ("PSEG Companies")	X		X		X	X				

	Additional Member	Additional Organization	Region	Segment Selection
1.	Jim Hubertus	PSE&G	RFC	1, 3
2.	Scott Slickers	PSEG Power Connecticut	NPCC	5
3.	Jim Hebson	PSEG ER&T	ERCOT	5, 6
4.	Dave Murray	PSEG Fossil	RFC	5

8.	Group	Sam Ciccone	FirstEnergy	X		X		X	X				

	Commenter	Organization	Industry Segment									
			1	2	3	4	5	6	7	8	9	10
Additional Member	**Additional Organization**	**Region**	**Segment Selection**									
1. Doug Hohlbaugh	FE	RFC	1, 3, 4, 5, 6									
2. Jim Kinney	FE	RFC	1									
3. K. Dresner	FE	RFC	5									
4. B. Duge	FE	RFC	5									
5. J. Chmura	FE	RFC	1									
6. B. Orians	FE	RFC	5									
9. Group	Terry L. Blackwell	Santee Cooper	X									
Additional Member	**Additional Organization**	**Region**	**Segment Selection**									
1. S. Tom Abrams	Santee Cooper	SERC	1									
2. Rene' Free	Santee Cooper	SERC	1									
3. Bridget Coffman	Santee Cooper	SERC	1									
10. Group	Daniel Herring	The Detroit Edison Company			X	X	X					
Additional Member	**Additional Organization**	**Region**	**Segment Selection**									
1. Dave Szulczewski	Relay Engineering	RFC	3, 4, 5									
11. Group	Sasa Maljukan	Hydro One Networks	X									
Additional Member	**Additional Organization**	**Region**	**Segment Selection**									
1. Peter FALTAOUS	Hydro One Networks, Inc.	NPCC	1									
2. David Kiguel	Hydro One Networks, Inc.	NPCC	1									
3. Paul DIFILIPPO	Hydro One Networks, Inc.	NPCC	1									
12. Group	Annette M. Bannon	PPL Supply					X					
Additional Member	**Additional Organization**	**Region**	**Segment Selection**									
1. Mark A. Heimbach	PPL Martins Creek, LLC	RFC	5									
2. Joseph V. Kisela	PPL Lower Mount Bethel Energy, LLC	RFC	5									

	Commenter	Organization	Industry Segment 1	2	3	4	5	6	7	8	9	10
3.		PPL Brunner Island, LLC; RFC; 5										
4.		PPL Montour, LLC; RFC; 5										
5.		PPL Holtwood, LLC; RFC; 5										
6.		PPL Wallingford, LLC; NPCC; 5										
7.		PPL University Park, LLC; RFC; 5										
8.	David L. Gladey	PPL Susquehanna, LLC; RFC; 5										
9.	Thomas E. Lehman	PPL Montana, LLC; WECC; 5										
10.	Lloyd R. Brown	PPL Montana, LLC; WECC; 5										
11.	Augustus J. Wilkins	PPL Montana, LLC; WECC; 5										
13.	Group	Richard Kafka; Pepco Holdings, Inc. - Affiliates	X		X		X	X				
	Additional Member	**Additional Organization**	**Region**	**Segment Selection**								
1.	Alvin Depew	Potomac Electric Power Company	RFC	1								
2.	Carl Kinsley	Delmarva Power & Light	RFC	1								
3.	Rob Wharton	Delmarva Power & Light	RFC	1								
4.	Evan Sage	Potomac Electric Power Company	RFC	1								
5.	Carlton Bradsaw	Delmarva Power & Light	RFC	1								
6.	Jason Parsick	Potomac Electric Power Company	RFC	1								
7.	Walt Blackwell	Potomac Electric Power Company	RFC	1								
8.	John Conlow	Atlantic City Electric	RFC	1								
9.	Randy Coleman	Delmarva Power & Light	RFC	1								
14.	Individual	JT Wood; Southern Company Transmission	X		X							
15.	Individual	Silvia Parada Mitchell; Corporate Compliance	X				X	X				
16.	Individual	Jana Van Ness, Director Regulatory Compliance; Arizona Public Service Company	X		X		X	X				

		Commenter	Organization	Industry Segment									
				1	2	3	4	5	6	7	8	9	10
17.	Individual	Tom Schneider	WECC										X
18.	Individual	Brandy A. Dunn	Western Area Power Administration	X					X				
19.	Individual	Sandra Shaffer	PacifiCorp	X		X		X	X				
20.	Individual	John Canavan	NorthWestern Corporation	X									
21.	Individual	Dan Roethemeyer	Dynegy Inc.					X					
22.	Individual	Robert Ganley	Long Island Power Authority	X									
23.	Individual	Jonathan Appelbaum	The United Illuminating Company	X									
24.	Individual	Lauri Dayton	Grant County PUD	X				X					
25.	Individual	Mark Fletcher	Nebraska Public Power District	X		X		X					
26.	Individual	Brian Evans-Mongeon	Utility Services								X		
27.	Individual	Charles J.Jensen	JEA	X		X		X					
28.	Individual	Fred Shelby	MEAG Power	X		X		X					
29.	Individual	James A. Ziebarth	Y-W Electric Association, Inc.				X						
30.	Individual	Armin Klusman	CenterPoint Energy	X									
31.	Individual	Kasia Mihalchuk	Manitoba Hydro	X		X		X	X				
32.	Individual	Edward Davis	Entergy Services	X		X		X	X				
33.	Individual	James Sharpe	South Carolina Electric and Gas	X		X		X	X				
34.	Individual	Jon Kapitz	Xcel Energy	X		X		X	X				
35.	Individual	Jeff Nelson	Springfield Utility Board			X							
36.	Individual	Amir Hammad	Constellation Power Generation					X					
37.	Individual	Gerry Schmitt	BGE	X									
38.	Individual	Michael R. Lombardi	Northeast Utilities	X		X		X					
39.	Individual	Jeff Kukla	Black Hills Power	X		X		X					

		Commenter	Organization	Industry Segment									
				1	2	3	4	5	6	7	8	9	10
40.	Individual	John Bee	Exelon	X		X		X					
41.	Individual	Andrew Z.Pusztai	American Transmission Company	X									
42.	Individual	Thad Ness	American Electric Power	X		X		X	X				
43.	Individual	Barb Kedrowski	We Energies			X	X	X					
44.	Individual	Jianmei Chai	Consumers Energy Company			X	X	X					
45.	Individual	Art Buanno	ReliabilityFirst Corp.										X
46.	Individual	Tyge Legier	San Diego Gas & Electric	X		X		X					
47.	Individual	Greg Rowland	Duke Energy	X		X		X	X				
48.	Individual	Claudiu Cadar	GDS Associates	X									
49.	Individual	Kirit Shah	Ameren	X		X		X	X				
50.	Individual	Joe Knight	Great River Energy	X		X		X	X				
51.	Individual	Terry Bowman	Progress Energy Carolinas	X		X		X	X				
52.	Group	Joe Spencer - SERC staff and Phil Winston - PCS co-chair	SERC Protection and Control Sub-committee (PCS)										X

	Additional Member	Additional Organization	Region	Segment Selection
1.	Paul Nauert	Ameren Services Co.	SERC	
2.	Bob Warren	Big Rivers Electric Corp.	SERC	
3.	Trevor Foster	Calpine Corp.	SERC	
4.	John (David) Fountain	Duke Energy Carolinas	SERC	
5.	Paul Rupard	East Kentucky Power Coop.	SERC	
6.	Charles Fink	Entergy	SERC	
7.	Marc Tunstall	Fayetteville Public Works Commission	SERC	
8.	John Clark	Georgia Power Co	SERC	

	Commenter	Organization	Industry Segment									
			1	2	3	4	5	6	7	8	9	10
9. Nathan Lovett	Georgia Transmission Corp	SERC										
10. Danny Myers	Louisiana Generation, LLC	SERC										
11. Ernesto Paon	Municipal Electric Authority of GA	SERC										
12. Jay Farrington	PowerSouth Energy Coop.	SERC										
13. Jerry Blackley	Progress Energy Carolinas	SERC										
14. Joe Spencer	SERC Reliability Corp	SERC										
15. Russ Evans	South Carolina Electric and Gas	SERC										
16. Bridget Coffman	South Carolina Public Service Authority	SERC										
17. Phillip Winston	Southern Co. Services Inc.	SERC										
18. George Pitts	Tennessee Valley Authority	SERC										
19. Rick Purdy	Virginia Electric and Power Co.	SERC										
53. Group	Frank Gaffney	Florida Municipal Power Agency	X		X	X	X					

	Additional Member	Additional Organization	Region	Segment Selection
1.	Timothy Beyrle	Utilities Commission of New Smyrna Beach	FRCC	4
2.	Greg Woessner	Kissimmee Utility Authority	FRCC	1
3.	Jim Howard	Lakeland Electric	FRCC	1
4.	Lynne Mila	City of Clewiston	FRCC	3
5.	Joe Stonecipher	Beaches Energy Services	FRCC	1
6.	Cairo Vanegas	Fort Pierce Utility Authority	FRCC	4

54. Group	Mallory Huggins	NERC Staff										

	Additional Member	Additional Organization	Region	Segment Selection
1.	Joel deJesus	NERC	NA - Not Applicable	NA
2.	Mike DeLaura	NERC	NA - Not Applicable	NA
3.	Bob Cummings	NERC	NA - Not Applicable	NA

		Commenter	Organization	Industry Segment									
				1	2	3	4	5	6	7	8	9	10
4.	David Taylor	NERC	NA - Not Applicable NA										
5.	Al McMeekin	NERC	NA - Not Applicable NA										
6.	Earl Shockley	NERC	NA - Not Applicable NA										
55.	Individual	Terry Harbour	MidAmerican Energy Company	X									
56.	Individual	Scott Berry	Indiana Municipal Power Agency				X						
57.	Individual	Rex Roehl	Indeck Energy Services					X					
58.	Individual	Martin Bauer	US Bureau of Reclamation					X					

1. **The SDT has made significant changes to the minimum maintenance activities and maximum allowable intervals within Tables 1a, 1b, and 1c, particularly related to station dc supply and dc control circuits. Do you agree with these changes? If not, please provide specific suggestions for improvement.**

Summary Consideration: Commenters expressed concerns with virtually all elements of posted Tables 1a, 1b, and 1c. In response to these comments, the Tables have been completely rearranged and extensively revised. The Tables now consist of one table for each of the five Protection System component types, as well as a sixth table to address monitoring and alarming requirements to support extended intervals for monitored Protection System components.

Several entities proposed extending the 3 month interval for unmonitored communication systems, and the drafting team did not adopt this suggestion because the SDT believes that three-months is necessary for these inspection-related activities related to communications systems

Organization	Yes or No	Question 1 Comment
Santee Cooper		No comment.
Xcel Energy		1. The current language is not aligned with the FAQ concerning the level of maintenance required for Dc Systems, in particular the FAQ states that with only 1 element of the Table 1b attributes in place the DC Supply can be maintained using the Table 1b activities, the table itself is clear that ALL of the elements must be present to classify the DC Supply as applicable to Table 1b. The FAQ needs to be aligned with the tables. 2. The FAQ also contains a duplicate decision tree chart for DC Supply. The FAQ contains a note on the Decision tree that reads, "Note: Physical inspection of the battery is required regardless of level of monitoring used", this statement should be placed on the table itself, and should include the word quarterly to define the inspection period.

Organization	Yes or No	Question 1 Comment
Response: Thank you for your comments. 1. The Tables have been rearranged and considerably revised to improve clarity. The FAQ has been modified. **2.** The FAQ has been modified.		
Pepco Holdings, Inc. - Affiliates		1. There were numerous comments submitted for Draft 1 indicating that the 3 month interval for verifying unmonitored communication systems was much too short. The SDT declined to change the interval and in their response stated: The 3 month intervals are for unmonitored equipment and are based on experience of the relaying industry represented by the SDT, the SPCTF and review of IEEE PSRC work. Relay communications using power line carrier or leased audio tone circuits are prone to channel failures and are proven to be less reliable than protective relays. Statistics on the causes of BES protective system misoperations, however, do not support this assertion. The PJM Relay Subcommittee has been tracking 230kV and above protective system misoperations on the PJM system for many years. For the six year period from 2002 to 2007, the number of protective system misoperations due to communication system problems were lower (and in many cases significantly lower) than those caused by defective relays, in every year but one. Similarly, RFC has conducted an analysis of BES protection system misoperations for 2008 and 2009, and found the number of misoperations caused by communication system problems to be in line with the number attributed to relay related problems. If unmonitored protective relays have a 6 year maximum maintenance/inspection interval, it does not seem reasonable to require the associated communication system to be inspected 24 times more frequently, particularly when relay failures are statistically more likely to cause protective system misoperations. As such, a 12 or 18 calendar month interval for inspection of unmonitored communication systems would seem to be more appropriate. FAQ II 6 B states that the concept should be that the entity verify that the communication equipment...is operable through a cursory inspection and site visit. However, unlike FSK schemes where channel integrity can easily be verified by the

Organization	Yes or No	Question 1 Comment
		presence of a guard signal, ON-OFF carrier schemes would require a check-back or loop-back test be initiated to verify channel integrity. If the carrier set was not equipped with this feature, verification would require personnel to be dispatched to each terminal to perform these manual checks. 2. The phrase "Verify Battery cell-to-cell connection resistance" has entered the table where it did not exist before. On some types of stationary battery units, this internal connection is inaccessible. On other types the connections are accessible, but there is no way to repair them based on a bad reading. And bad cell-to-cell connections within units will be detected by the other required tests. This requirement will cause entities to scrap perfectly good batteries just so this test can be performed, with no corresponding increase in bulk electric system reliability while taking an unnecessary risk to personnel and the environment.
Response: Thank you for your comments. 1. The SDT believes that the 3-month interval is proper for unmonitored communications systems. **2.** This element of the table has been modified to state, "Battery internal cell-to-cell or unit-to-unit connection resistance (where available to measure)" to address this comment.		
Indeck Energy Services	No	
GDS Associates	No	Table 1a. Protective relays 1. For microprocessor relays need guidance in how all the inputs/outputs will be checked and how is determined which one are "essential to proper functioning of the Protection System" 2. For microprocessor relays need guidance in how the acceptable measurement is physically determined.

Organization	Yes or No	Question 1 Comment
Response: Thank you for comments. 1. The Standard is proscribed from describing "how." Section 15.3 of the Supplementary Reference provides some guidance, but it is left to the entity to determine what methods best address their program. **2.** The Standard is proscribed from describing "how." Section 15.3 of the Supplementary Reference provides some guidance, but it is left to the entity to determine what methods best address their program.		
Western Area Power Administration	No	1) Standard, Table 1a, "Control and trip circuits with electromechanical trip or aux contacts (except for microprocessor relays, UFLS or UVLS)": Where would un-monitored control and trip circuits connected to a microprocessor relay fall, and what is the associated interval and maintenance activity? 2) Standard, Table 1a, "Control and trip circuits with electromechanical trip or aux contacts (except for microprocessor relays, UFLS or UVLS)": Please confirm that the defined Maintenance Activity requires actual tripping of circuit breakers or interrupting devices. 3) Standard, Table 1a, "Control and trip circuits with unmonitored solid state trip or auxiliary contacts (except UFLS or UVLS)": Please confirm that the defined Maintenance Activity requires actual tripping of circuit breakers or interrupting devices. 4) Standard, Table 1b. On page 13, for Protective Relays, please clarify the intent of "Conversion of samples to numeric values for measurement calculations by microprocessor electronics that are also performing self diagnosis and alarming." 5) Standard, Table 1b. On page 13, for Protective Relays, please clarify the intent of "Verify correct operation of output actions that used for tripping." Does this require functional testing of a microprocessor relay, i.e., using a relay test set to simulate a fault condition? 6) Standard, Tables 1a and 1b: Would it be possible to provide an interval credit for full parallel redundancy from relay to trip coil? 7) Table 1a (page 9) Voltage and Current Sensing Inputs to Protective Relays and

Organization	Yes or No	Question 1 Comment
		associated circuitry – This maintenance activity statement implies that signal tests to prove the voltage and current are present is all that is required. Can this be accomplished by adding a step to the Relay Maintenance Job Plan to take a snapshot of the currents and potentials (In-Service Read) with piece of test equipment? 8) Table 1b (Page 14) Control and Trip Circuitry - Level 2 Monitoring Attributes for Component is too wordy and hard to understand the meaning. Does this whole paragraph mean that the dc circuits need to be monitored and alarmed? At what level does the dc control circuits need the alarming? Can this be at the control panel dc breaker output? 9) Table 1b (Page 15) Station Dc Supply - Should this be in Table 1c because the attributes indicate that the station dc supply cells and electrolyte levels are monitored remotely. To do a fully monitored battery system would be cost prohibitive and require a tremendous amount of engineering. 10) Voltage and Current Sensing Inputs to Protective Relays and associated circuitry - This maintenance activity statement implies that signal tests to prove the voltage and current are present is all that is required. Can this be accomplished by adding a step to the Relay Maintenance Job Plan to take a snapshot of the currents and potentials (In-Service Read) with piece of test equipment? 11) Table 1a and 1b (Page 11 and 16) Associated communications system - Western has monitoring capability on all Microwave Radio and Fiber Optics communications systems with the Communications Alarm System that monitors and annunciates trouble with all communications equipment in the communications network. The protective relays that use a communications channel on these systems have alarm capability to the remote terminal units in the substation. Since these are digital channels how does an entity prove channel performance on a digital system?
Response: Thank you for your comments. 1. The Tables have been rearranged and considerably revised to improve clarity. Please see the new Table 1-5.		

Organization	Yes or No	Question 1 Comment
2. The Standard requires that breakers (except for those for UFLS/UVLS) be tripped at least once during each 6 calendar year interval. See new Table 1-5. 3. The Standard requires that breakers (except for those for UFLS/UVLS) be tripped at least once during each 6 calendar year interval. See new Table 1-5. 4. The Tables have been rearranged and considerably revised to improve clarity. Please see new Table 1-1. 5. The Tables have been rearranged and considerably revised to improve clarity. Please see new Table 1-1. 6. No. The SDT believes that it is important that all parallel paths be maintained within the indicated interval, and the prescribed interval already considers the reliability benefits of parallel tripping paths. 7. The Tables have been rearranged and considerably revised to improve clarity. Please see new Table 1-3. It may be possible to do as suggested in some cases; a snapshot may be able to determine that voltage and current is present at the relay. However, the snapshot may not be sufficient to determine that the values are acceptable. 8. The Tables have been rearranged and considerably revised to improve clarity. Please see new Table 1-5. 9. The Tables have been rearranged and considerably revised to improve clarity. Please see new Table 1-4. 10. The Tables have been rearranged and considerably revised to improve clarity. Please see new Table 1-3. It may be possible to do as suggested in some cases; a snapshot may be able to determine that voltage and current is present at the relay. However, the snapshot may not be sufficient to determine that the values are acceptable. **11.** Many digital communications systems or digital relays themselves use bit-error-rate or other methods to monitor and alarm on channel performance – check the design of the equipment used.		
Southern Company Transmission	No	1) Comment on Control Circuitry - Below in Figure 1 is a previous version of Table 1. It clearly shows 3 levels of monitoring for Control Circuitry. For Unmonitored schemes such as EM, SS, unmonitored MP relays, you must do a complete functional trip test every 6 years. For partially monitored schemes such as MP relays with continuous trip coil/circuit monitoring, you must do a complete functional trip test every 12 years. For fully monitored schemes where all trip paths are monitored, you do not have to trip test the scheme but you still have to operate the breaker trip coils, EM aux/lockout relays every 6

Organization	Yes or No	Question 1 Comment
		years. This is very clear and reasonable. The latest version of Table 1 is not very clear or reasonable. The previous Partially Monitored control circuit monitoring requirements were deleted and the Fully Monitored control circuit monitoring requirements were moved to Partially Monitored requirements. We are not sure why this major change in philosophy was made?? This makes all of our MP relay control schemes that continuously monitor trip coils/circuits fall into the unmonitored category and therefore requires a 6 year full functional trip test. For a scheme that monitors 99+% of the control scheme (and probably 100% of the control scheme that actually has problems) to be considered Unmonitored does not seem logical or reasonable to us. This puts these "highly monitored" schemes in the same category and requires the same maintenance requirements / intervals as EM relays with no alarms whatsoever. This also seems to contradict the intent of the following statement from the Supplementary Reference doc on page 9: Level 2 Monitoring (Partially Monitored) Table 1b This table applies to microprocessor relays and other associated Protection System components whose self-monitoring alarms are transmitted to a location (at least daily) where action can be taken for alarmed failures. The attributes of the monitoring system must meet the requirements specified in the header of the Table 1b. Given these advanced monitoring capabilities, it is known that there are specific and routine testing functions occurring within the device. Because of this ongoing monitoring hands-on action is required less often because routine testing is automated. However, there is now an additional task that must be accomplished during the hands-on process - the monitoring and alarming functions must be shown to work. Recommendation - Please consider going back to the previous table as shown below in Figure 1. It seems much clearer and reasonable. Feel free to convert the old wording to the latest wording. Figure 1 - Previous Table - Control Circuitry See Figure 1 in email documentation sent to Al McMeekin. Current Table - Control Circuitry (see pdf file) See pdf file PRC-005-2_clean_20 10June88131418.pdf in email documentation sent to Al McMeekin. 2) Comments: The comments below are grouped by component type. The following (5) comments pertain to the maintenance intervals for protective relays:

Organization	Yes or No	Question 1 Comment
		a. Is the "verify acceptable measurement of power system input values" activity listed in the protective relay 6 year interval in Table 1a the same activity as the 12-year activity for Voltage and Current Sensing Inputs in the same table? b. Please clarify the meaning of "check the relay inputs and outputs" that are specified to be checked for microprocessor relays at the following table locations: the protective relay 6 year interval in Table 1a, the protective relay 12-year interval in Table 1b. Is this referring to a check of the relay internal input recognition and output control ending at the relay case terminals, or is this referring to a check extending to the source (and target) of all inputs and outputs to the relay? The latter interpretation results in a repeat of the maintenance required for dc control circuitry. c. Are the second, third, and fourth maintenance activities in the Table 1a Protective Relay, 6-year row those activities that apply to microprocessor relays? If so, we suggest rewording these items as follows: For microprocessor relays, verify that the settings are as specified, check the relay digital inputs and outputs that are essential to proper functioning of the Protection System, and verify acceptable measurement of power system analog input values." d. Please clarify the meaning of "Verify proper functioning of the relay trip contacts" found in protective relays with trip contacts 12 year interval in Table 1c. Is this verification a check of the relay internal contact to the relay case terminals or is this meant to be a trip check functional test? This category of component does not appear in table 1a or 1b. Should it? Is this activity the same as the protective relay Table 1b maintenance activity "output actions used for tripping"? If so, please make the wording match exactly to clarify. e. Table 1c introduces the use of "Continuous" Maximum Maintenance Intervals. This is inconsistent with the Table 1a and Table 1b usage of the interval. In Tables 1a and 1b this interval is used to describe the maximum time frame within which the activities shown in "Maintenance Activities" must be completed. The table column "Maintenance Activities" has been used to identify those activities which must be performed in addition

Organization	Yes or No	Question 1 Comment
		to those accomplished by the monitoring attributes. To maintain consistency in use of the interval and activity columns of Tables 1a, 1b, and 1c, each entry that uses the "Continuous" interval should be changed to N/A and the Maintenance Activities should be changed to either "No additional activities required" or "None, due to continuous automatic verification of the status of the relays and alarming on change of settings" [example given for Table 1c, Protective Relays] 3) The following (8) comments apply to Maintenance Tables 1a, 1b, and 1c for Station DC supplies. a. In Table 1a, Station dc supply, 18 calendar month, the verify item "Float voltage of battery charger" is not listed in Table 1b. Is this requirement independent of the level of monitoring and always required? If so, should it be added in to Table 1b and 1c, Station dc supply, 18 calendar months above the "Inspect:" section? b. The 6 year interval maintenance activity for NiCad batteries in Table 1a and Table 1b should read "station battery" rather than "substation battery". c. It is recommended to simplify the Station dc supply sections in each of the three maintenance tables by relocating the common items that do not change dependent upon the level of monitoring. Specifically, the following rows of each of the three tables have identical maintenance requirements that are independent of the level of monitoring. The tables would be significantly simplified if these "monitor level independent" requirements are moved outside of the table: I. Station dc supply; 18 calendar months; Inspect: " II. Station dc supply (that has a s a component Valve Regulated Lead Acid batteries) III. Station dc supply (that has as a component Vented Lead Acid batteries) IV. Station dc supply (that has as a component Nickel Cadmium batteries) V. Station dc supply (battery is not used)

Organization	Yes or No	Question 1 Comment
		d. Table 1a has 18 calendar month requirements for "Station dc supply (battery is not used)". This category is missing from Table 1b - was this intentional? e. Table 1a has 6 calendar year and 18 calendar month requirements for "Station dc supply (battery is not used)". This category is missing from Table 1c - was this intentional? f. Please clarify the meaning of "Battery terminal connection resistance". Does this apply only to multi-terminal batteries? Is this referring to the cables external to the battery (to the charger and load panel)? g. Table 1c contains a Type of Protection System Component not found in any of the other tables: "Station dc supply (any battery technology). Is this the same as "Station dc supply" found in Tables 1a and 1b? h. The Level 3 Monitoring Attributes for "Station dc supply (any battery technology)" are identical to the Level 2 Monitoring Attributes for "Station dc supply". This appears to be duplicative in description with two different "maximum maintenance intervals" and "maintenance activities" listed. 4) The following (3) comments pertain to the Voltage and Current Sensing Input component type: a. Why is "signals" bolded in the Table 1a row for this component type? b. Are the Table 1a, 12 year maintenance activities for this component type a duplication of the Table 1a, Protective relay, 6 year maintenance activity for microprocessor relays (verify acceptable measurement of power system input values)? c. Why is this component type highlighted in bold in Table 1c? 5) The following (8) comments pertain to the Control and Trip Circuit component type: a. Why are microprocessor relay initiated tripping schemes excluded from the 6 year

Organization	Yes or No	Question 1 Comment
		complete functional testing? The auxiliary relay operations resulting from these initiating devices are just as likely to stick (mis-operate) as those initiated from electromechanical devices. b. We propose simplifying Table 1a for this component type by grouping the two 6 year and the two 12 year interval maintenance lines into two rather than four table rows. The 6 year interval maintenance activities for the UFLS/UVLS systems could be addressed in the table row above using a parenthetical adder to the existing text = (for UFLS/UVLS systems, the verification does not require actual tripping of circuit breakers or interrupting devices). All of the other text in the UFLS/UVLS table row matches that found two rows above. The same parenthetical adder in the first 12 year interval row for this component type would eliminate the need for the (UFLS/UVLS Systems Only) row for 12 year intervals. c. If the two rows are combined as suggested previously - this comment is irrelevant: The Table 1a 6 year interval activity for UFLS/UVLS Systems Only is missing the word "contacts" after auxiliary. d. There appears to be no difference in the 6 year interval maintenance activities for this component type in Table 1a and Table 1b. Table 1b monitoring attributes include "Monitoring and alarming of continuity of trip circuits", but the interval between electrically operating each breaker trip coil, auxiliary relay, and lockout relay remains at 6 years. What maintenance activity advantage do the Level 1b monitoring attributes provide? e. The difference between the two DC Control Circuits in Table 1b (on page 14) is unclear. What is the difference between the "Control Circuitry (Trip Circuits)" and the "Control and trip circuitry"? We propose combing the multiple table rows for this component type into a single line item for this component type, as it takes a combination of the protective relay action, any auxiliary relay, and the circuit breaker to comprise a complete tripping system. f. We have three questions on the monitoring attributes given for this component type on

Organization	Yes or No	Question 1 Comment
		page 14: I. Does the attribute beginning “Monitoring of Protection ...” indicate a requirement to monitor every input, every output, and every connection of every Protection System Component involved in each tripping scheme? II. Does the attribute beginning “Connection paths...” related to monitoring of communication paths? III. Does the attribute beginning “Monitoring of the continuity...” require the presence of coil monitoring of any auxiliary relay whose contact is encountered when tracing a tripping path from a protective relay to a breaker? g. Are the Table 1c attributes for this component type different from the monitoring described in Table 1b beginning “Connection paths...”? h. Are there no requirements to operate any relays functionally for “Protection System control and trip circuitry” in Table 1c? The devices need to be exercised some or they will not be reliable. 6) The following (1) comment pertains to the Associated communications system component type: The Table 1b monitoring attribute for this component type (communications channel monitor and alarm) clearly should (and does) eliminate the Table 1a, 3 month interval activity (verifying the communication system is functional). The common maintenance activities found in Table 1a (6 year) and Table 1b (12 year) should be same interval - either 6 or 12.
Response: Thank you for your comments. 1. The Tables have been rearranged and considerably revised to improve clarity. Please see new Table 1-5. 2. The Tables have been rearranged and considerably revised to improve clarity. Please see new Table 1-1 for all five of these		

Organization	Yes or No	Question 1 Comment
comments. 3. The Tables have been rearranged and considerably revised to improve clarity. Please see new Table 1-4 for all eight of these comments. 3f. Please see IEEE 450-2002 Appendix F, IEEE 1188-2005 Appendix D, and Section 6.3.2 of IEEE 1106-2005 for clarification of the meaning of "battery terminal connection resistance". 4. The Tables have been rearranged and considerably revised to improve clarity. Please see new Table 1-3 for all three of these comments. 5. The Tables have been rearranged and considerably revised to improve clarity. Please see new Table 1-5 for all eight of these comments. 6. The Tables have been rearranged and considerably revised to improve clarity. Please see new Table 1-2 for this comment.		
Consumers Energy Company	No	1. If multiple redundant Protection System components, with associated parallel tripping paths, are provided, Table 1a, 1b, and 1c require that each parallel path be maintained, and that the maintenance be documented. Often, these multiple schemes are provided not to meet specific reliability-related requirements, but instead to provide operating flexibility. Testing these likely will require outages, and those outages may result in decreased reliability. Further, the documentation related to maintenance of all paths will be very cumbersome, and will lead to increased compliance exposure simply by its volume. This may perversely lead to entities NOT installing the redundant schemes, resulting in decreased reliability. 2. Many of the activities described in the Tables are not, by themselves, clear. The standard should include sufficient detail such that entities are clear as to what must be done for compliance, rather that relying on supplementary documents for this information. For example, it's not clear, in Table 1a (Station DC Supply), what is meant by, "Verify that the dc supply can perform as designed when the ac power from the grid is not present." Similarly, it isn't clear from the general description within the Tables that components possessing different monitoring attributes within a single scheme, may be distinguished

Organization	Yes or No	Question 1 Comment
		such that differing relevant tables can be used for the separate components. 3. In Table 1a, Station DC Supply, one of two optional activities is to "Verify that the station battery can perform as designed by evaluating the measured cell/unit internal ohmic values to station battery baseline. Battery assemblies supplied by some manufacturers have the connections made internally, making this option unavailable. Experience with ASME standards show that NERC and SDT members may be jointly and separately liable for litigation by specifying methods that either prefer or prohibit use of certain technologies. 4. Two of the four Maintenance Activities that begin with "Perform a complete functional trip ..." conclude with "... does not require actual tripping of circuit breakers or other interrupting devices. Do the other two such activities therefore require tripping of circuit breakers or other interrupting devices? 5. Performance of the minimum activities specified within Table 1a for legacy systems, particularly regarding control circuits, will require considerable disconnection and reconnection of portions of the circuits. Such activities will likely cause far more problems on restoration-to-service than they will locate and correct. We suggest that the SDT reconsider these activities with regard for this concern.

Response: Thank you for your comments.

1. The SDT believes that it is important that all parallel paths be maintained within the indicated interval, and the prescribed interval already considers the reliability benefits of parallel tripping paths.
2. The Tables have been rearranged and considerably revised to improve clarity. Please see new Table 1-5.
3. The use of the term "cell/unit" acknowledges that individual cells may not be accessible, but that assemblies of several cells (into units) may be available instead, and may be used to address this Requirement. An acceptable base-line value and follow-on tests may be acceptable for the entire station battery as a single unit.
4. The Tables have been rearranged and considerably revised to improve clarity. Please see new Table 1-5.

Organization	Yes or No	Question 1 Comment
5. The Tables have been rearranged and considerably revised to improve clarity. Please see new Table 1-5. To the degree that performance history for the components within these systems is available, a performance-based program per Requirement R3 and Attachment A may be useful in these cases.		
JEA	No	1. R1.1 What is a Protection System component? Could the SDT provide a better understanding of what is meant by component? 2. R4: A "Failure to specify whether a component is being addressed by time-based, condition-based, or performance-based maintenance" by itself is a documentation issue and not an equipment maintenance issue. Suggest this warrants only a lower VSL, especially when one of the required components can only be time based. 3. R4: Suggest a stepped VSL for "Entity has failed to initiate resolution of maintenance-correctable issues". While we understand the importance of addressing a correctable issue, it seems like there should be some allowance for an isolated unintentional failure to address a correctable issue.
Response: Thank you for your comments. 1. A definition of "Component" has been added to the draft Standard. The SDT's intent is that this definition will be used only in PRC-005-2, and thus will remain with the Standard when approved, rather than being relocated to the Glossary of Terms. 2. This comment appears to be related to the VSL for Requirement R1, not Requirement R4 as indicated. The SDT disagrees that this is a "documentation" issue, and believes that that the related Requirement is fundamental to establishing an effective PSMP per this Standard. Also, this VSL is graded such that missing up to 5% of the required activity is indeed a Lower VSL. **3.** The VSL for Requirement R4 has been modified as suggested.		
Entergy Services	No	1. Table 1a has a "Control and trip circuits with electromechanical trip or auxiliary contacts (except for microprocessor relays, UFLS or UVLS)" component type listed, and there is a "Control and trip circuits with electromechanical trip or auxiliary [editorial comment: add 'contacts'] (UFLS/UVLS systems only)" component type listed. Suggest a "Control and trip circuits with electromechanical trip or auxiliary contacts" for a microprocessor relay

Organization	Yes or No	Question 1 Comment
		application should be addressed since it seems to be missing. 2. The term “check” has replaced “verify” for some of the maintenance activities in this draft version. What is the difference between these two terms, and shouldn’t “check” be defined if it is to be included as a PSMP activity term? 3. Assuming the term “check” replaced “verify proper functioning” in order to allow for the completion of a maintenance activity within the required interval and yet account for a maintenance correctable issue being present, suggest the other remaining activities in the tables where the term “verify proper functioning” is used, also be replaced with “check”. 4. Consider modifying the definition of “verification” to “A means of determining or checking that the component is functioning properly or maintenance correctable issues are identified”, eliminate use of the term “verify proper functioning” (which seems to be redundant by PRC-005-2 standard definition), and simply use the term “verify”.
Response: Thank you for your comments. 1. The Tables have been rearranged and considerably revised to improve clarity. Please see new Table 1-5. 2. “Check” is not an element of the PSMP definition. This term has been replaced throughout the tables with whatever term of the definition is relevant. 3. “Check” is not an element of the PSMP definition. This term has been replaced throughout the tables with whatever term of the definition is relevant. **4.** The terms within the PSMP definition have been revised to reflect the action (“verify” rather than “verification,” for example). The SDT believes that the use of the term “verify” within the modified tables and the definition of this component in the PSMP definition is appropriate and correct.		
MEAG Power	No	1. The descriptions for the "type of protection system components" do not appear to be consistent between Tables, 1a, 1b and 1c.

Organization	Yes or No	Question 1 Comment
		2. The maximum maintenance interval for a lead-acid vented battery is listed at 6 calendar years for performing a capacity test. This type of test has been proven to reduce battery life and an interval of 10 to 12 years would be better. 3. The maximum maintenance interval for "Station DC supply" was set at 3 months. This is too short of a period and 6 months would be better. 4. The control and trip circuits associated with UVLS and UFLS do not require tripping of the breakers but all other protection systems require tripping of the breakers, this appears to be inconsistent? 5. Digital relays have electromagnetic output relays. Do they fall into the electromechanical trip or solid state trip? 6. Need for clarification: The standard indicates that only voltage and current signals need to be verified. Does this mean that voltage and current transformers do not need to be tested by applying a primary signal and verifying the secondary output?

Response: Thank you for your comment.

1. The Tables have been rearranged and considerably revised to improve clarity and consistency. Please see new Table 1-5.
2. The SDT disagrees, and believes that a capacity test at 6-year levels is appropiate. A properly maintained battery, according to various credible references (from IEEE, EEI, EPRI, various manufacturers, etc.), can easily handle multiple deep discharges over its expected life.
3. The activity related to this interval is to verify various basic operating parameters. The SDT believes that extension of verification of these parameters beyond the interval within the Standard is inappropriate.
4. This is an intentional difference between UFLS/UVLS and the remainder of the Protection Systems addressed within the Standard, because of the distributed nature of UFLS/UVLS and because these devices are usually tripping distribution system elements.
5. These devices fall under “electromechanical output contacts.” The Tables have been rearranged and considerably revised to improve clarity. Please see new Table 1-1.

Organization	Yes or No	Question 1 Comment
6. The Tables have been rearranged and considerably revised to improve clarity. Please see new Table 1-3.		
Ameren	No	Ameren does agree that draft 2 is a considerable improvement from draft 1 of PRC-005-2; however the following still need to be addressed. 1) Use "Control circuitry" to be consistent with the proposed definition. If 'and trip' was included so that users would know this is a trip circuit, then the definition should use 'Trip circuitry' instead of 'Control circuitry'. It is important to use consistent terminology throughout the definition and the standard. 2) Please add row numbers in each of Tables 1a, 1b, and 1c, and arrange so that row 1 in each table corresponds, etc. (or state which rows correspond to each other.) This would help clarify movement from table to table. The number of sub clauses, nuances, and varied Type of Component descriptors among rows in the same table as well as from table-to-table can be overwhelming. This would help keep Regional Entities and System Owners from making errors. 3) Please clarify that the instrument transformer itself is excluded. The standard indicates that only voltage and current signals need to be verified. The FAQ seems to cover this, but see our comments on your question 6. 4) Clarifications need to be made on testing requirements on trip contacts relative to microprocessor vs. EM relays. Digital relays have electromagnetic output relays. Do they fall into the electromechanical trip or solid state trip? 5) There appears to be an inconsistency in the use of "check" vs. "verify" in the tables. Consider modifying the definition of "verification" to "A means of determining or checking that the component is functioning properly or that the maintenance correctable issues are identified", eliminate use of the term "verify proper functioning" (which seems to be redundant by PRC-005-2 standard definition), and simply use the term "verify". 6) Alternately if the term "check" replaced "verify proper functioning" in order to allow for the completion of a maintenance activity within the required interval and yet account for an

Organization	Yes or No	Question 1 Comment
		outstanding maintenance correctable issue being present, suggest the other remaining activities in the tables where the term “verify proper functioning” is used, also be replaced with “check”. 7) If there is an intentional difference between “verify” and “check”, shouldn’t “check” be defined if it is to be included as a PSMP activity term? 8) Functional trip testing will require extensive analysis and could involve an extensive testing evolution to ensure the correct circuit is tested without unexpected trip of other components, particularly for generator protection systems and some transmission configurations. The complexity of the system and the test would be conducive to an error that resulted in excessive tripping, thus affecting the reliability of the BES. It would seem that the potential for an adverse affect from this test would be greater than the benefit gained of testing the circuit. In addition, scheduling outages to perform the functional trip testing in conjunction with other outages required to perform maintenance and other construction activities will be difficult due to the large number of outage requirements for the functional testing. This will challenge the BES more often and thus reduce reliability. For these reasons functional trip testing is too frequent, and should be extended to twelve years. 9) In battery maintenance table, we suggest that “cell/unit” be changed to “cell or unit.” Suggest substituting “unit-to-unit” wherever “cell-to-cell” is used in the table now. Many batteries are packaged such that the individual cells are not accessible. 10) IEEE battery maintenance standards call for quarterly inspections. These are targets, though, not maximums. An entity wishing to avoid non-compliance for an interval that might extend past three calendar months due to storms and outages must set a target interval of two months thereby increasing the number of inspections each year by half again. This is unnecessarily frequent. We suggest changing the maximum interval for battery inspections to 4 calendar months. For consistency, we also suggest that all intervals expressed as 3 calendar months be changed to 4 calendar months. 11) Replace “State of charge of the individual battery cells/units” with “Voltage of the

Organization	Yes or No	Question 1 Comment
		individual battery cells or units". 12) The maximum maintenance interval for a lead-acid vented battery is listed at 6 calendar years for performing a capacity test. This type of test has been proven to reduce battery life and an interval of 10 to 12 years would be better. 13) The level 2 table regarding Protection Station dc supply states that level 1 maintenance activities are to be used, but then goes on to give a list of Maintenance Activities that don't match those in level 1. Which activities shall we use? Same situation for Station DC Supply (battery is not used) where the 18 month interval is missing. 14) Also, Table 1B, in the second to last row, should be referring to UFLS rather than SPS.

Response: Thank you for your comments.

1. The Tables have been rearranged and considerably revised to improve clarity and consistency. Please see new Table 1-5.
2. The Tables have been rearranged and considerably revised to improve clarity and consistency. Please see new Table 1-5.
3. The definition has been modified to clarify that instrument transformers ARE part of the Protection System, and the maintenance activities in the new Table 1-3 specify WHAT must be done regarding this component type. The FAQ (II.3.A) is correct on this subject.
4. The Tables have been rearranged and considerably revised to improve clarity. These devices fall under "electromechanical output contacts." The Tables have been rearranged and considerably revised to improve clarity. Please see new Table 1-1.
5. "Check" is not an element of the PSMP definition. This term has been replaced throughout the Tables with whatever term of the definition is relevant. The Tables have been rearranged and considerably revised to improve clarity. Please see new Table 1-5.
6. "Check" is not an element of the PSMP definition. This term has been replaced throughout the Tables with whatever term of the definition is relevant. The Tables have been rearranged and considerably revised to improve clarity. Please see new Table 1-5.
7. "Check" is not an element of the PSMP definition. This term has been replaced throughout the Tables with whatever term of the definition is relevant.
8. The Tables have been rearranged and considerably revised to improve clarity. Please see new Table 1-5.

Organization	Yes or No	Question 1 Comment
9. The Tables have been rearranged and considerably revised to improve clarity. Please see new Table 1-4. This element of the table has been modified to state, "Battery internal cell-to-cell or unit-to-unit connection resistance (where available to measure)" to address this comment. 10. The Tables have been rearranged and considerably revised to improve clarity. Please see new Table 1-4. The Requirement remains as "3 Calendar Months" and the SDT is not prescribing or suggesting what measures an entity may take within their program to assure compliance. 11. The Tables have been rearranged and considerably revised to improve clarity. Please see new Table 1-4. Verification of voltage of individual cells, etc., is one method; there are other ways. 12. The SDT disagrees, and believes that a capacity test at 6-year intervals is appropiate for Vented Lead Acid and Ni-Cad batteries. A properly maintained battery, according to various credible references (from IEEE, EEI, EPRI, various manufacturers, etc.), can easily handle multiple deep discharges over its expected life. 13. The Tables have been rearranged and considerably revised to improve clarity. Please see new Table 1-4. **14.** The Tables have been rearranged and considerably revised to improve clarity. Please see new Tables 1-5.		
American Transmission Company	No	ATC feels additional changes are needed. 1. The functional testing requirement should be altered or removed as it increases the amount of hands-on involvement and the opportunity for human error related outages to occur, thereby introducing more opportunities to decrease system reliability. As noted on p. 8 in the supplementary reference document, "Experience has shown that keeping human hands away from equipment known to be working correctly enhances reliability." By removing circuits from service on the proposed timelines for functional testing, the chance for human error is greater than a mis-operation from faulty wiring. Alternatively, entities may choose to schedule more planned outages to conduct their functional testing in order to limit the risk of unplanned outages resulting from human error. Under this scenario, more elements will be scheduled out of service on a regular basis, thereby reducing transmission system availability and weakening the system making it more challenging to withstand each subsequent contingency (N-1). Thus testing an in-tact

Organization	Yes or No	Question 1 Comment
		system is more desirable than taking it out of service for testing. 2. While the SDT has included language in the draft standard to use fault analysis to complete maintenance obligations, in practicality, this option does not offer any relief to taking outages to perform functional tests. Nearly all BES circuit breakers are equipped with dual trip coils. Identifying which trip coil operated for a fault only covers the one trip coil. Functional tests would still be needed on the other. The likelihood of having multiple trips on a given line in the course of several years is very low. Given it can take a year to schedule some outages, planning maintenance with random faults is unpractical and will create unacceptable risk to compliance violations. A better approach is to use the basis in schedule A, but extend this to cover the entire protection schemes. The document should establish target goals for mis-operation rates (dependability and security). This would allow the utilities to develop cost effective programs to increase reliability. The utilities would have incentives to replace poorly performing communications systems; they would be able to quantify the value of upgrading relay systems.
Response: Thank you for your comments. 1. The Tables have been rearranged and considerably revised to improve clarity. Please see new Table 1-5. **2.** Operational results, if desired by an entity, MAY be used to meet maintenance requirements to the degree that they verify, etc., the relevant performance. Whether their use is effective for a specific entity is left to the entity to determine. "Maintenance correctable issues," which may result in part from misoperations, are a part of using Attachment A to develop a Performance Based PSMP.		
Corporate Compliance	No	Battery visuals should be changed from 3 months to 6 months. Electrolyte levels of today's lead-calcium batteries are relatively stable for a 6 month period compared to lead-antimony batteries used in the past.
Response: Thank you for your comments. The activity related to this interval is to verify various basic operating parameters. The SDT believes that extension of verification of these parameters beyond the interval within the Standard is inappropriate.		

Organization	Yes or No	Question 1 Comment
Northeast Power Coordinating Council	No	1. Clarification is needed for “to a location where action can be taken”. Some examples in the FAQ will help in this clarification. 2. What type of documentation is required to show compliance that maintenance correctable issue has been reported? 3. Clarify the removal of requirement (see redline version, third row of Table 1a) for testing of unmonitored breaker trip coils. Is it the intention of the SDT to remove a requirement that would drive the industry to install TC monitors on breakers to improve reliability? 4. UFLS/UVLS DC control and trip circuits (Rows 5 and 6 of Table 1a) - Due to the distributed nature of this program, random failures to trip are not impactive to the overall operation of the UFLS protection. There should be no requirement to check the DC portion of these protections any more often than the DC circuit checks associated with that LV breaker. Since it is clear the requirement does not include the need to trip the breakers why the need to check the trip paths? Deletion of this requirement leaves the requirement to check only the relays and relay trip outputs from the protections every 6 years (or as often as the protective relay component type). Should the maintenance activities for “UVLS and UFLS relays that comprise a protection scheme distributed over the power system” not be the same as “Protective Relays”? V and I sensing to relays have a 12 year Maximum Maintenance Interval listed. It is good work practice to have this activity done the same time as maintenance activities associated with relay maintenance. 5. What is the basis for the various Maximum Maintenance Intervals listed in Table 1a? 6. From page 12 of the redline version, for "Station dc Supply (used only for UFLS and UVLS)", is the requirement applicable to distribution substations only? 7. For “Control and trip circuits with unmonitored solid-state trip or auxiliary contacts (UFLS/UVLS Systems only)” under Maintenance Activities - the word “complete: may be removed as it requires to actually trip the breakers. The sentence that tripping of the circuit breakers is not required contradicts with the word “complete”. More specifics are

Organization	Yes or No	Question 1 Comment
		required to spell out the adequate testing e.g. up to the lockout with the trip paths isolated etc. See Page 12 of the redline version. 8. For “Station dc Supply” having 18 calendar months as the Maximum Maintenance Interval, a battery has a 20 year life. IEEE standard PM is on a quarterly basis. What is the basis of the 18 calendar month interval? See page 12 of the redline version. 9. For “Associated communications systems” with a Maximum Maintenance Interval of 6 Calendar years, why is this required? The text "Verify proper functioning of communications equipment inputs and outputs that are essential to proper functioning of the Protection System. Verify the signals to/from the associated protective relay(s)" seems sufficient to ensure reliability. See page 15 of the redline version. 10. For “Relay sensing for Centralized UFLS or UVLS systems UVLS and UFLS relays that comprise a protection scheme distributed over the power system” under maintenance activities, clarify “overlapping segments”. What is the specified interval? Is actual breaker tripping required? See page 15 of the redline version. 11. On the row for Associated communications systems in Table 1c, in the Level 3 Monitoring Attributes for Component column, suggest a change in wording to: Evaluating the performance and quality of the channel as well as the performance of any interface to connected protective relays and alarming if the channel/protective relay connections do not meet performance criteria. 12. In Table 1c it is required to report the detected maintenance correctable issues within 1 hour or less to a location where action can be taken to initiate resolution of that issue. Even for a fully monitored protection system component it can be difficult to report the action in 1 hour. A 24 hour period for both Level 2 and Level 3 reporting of maintenance correctable issues is recommended.
Response: Thank you for your comments. 1. This is addressed in the Supplementary Reference document as posted with this draft (Section 8.1 and Section 13), and within the		

Organization	Yes or No	Question 1 Comment
		FAQ as posted with this draft Standard (V.3.D). 2. Specific effective forms of documentation are left to the entity to determine, but the SDT believes that this could include, among other things, work orders addressing the maintenance correctable issue. 3. The Tables have been rearranged and considerably revised to simplify and improve clarity. Please see new Table 1-5. Specifically to your comment, the SDT initially specified inspection of trip-coil monitoring functions at intervals of 3 months, with tripping otherwise requried annually. This has been revised to simply require tripping at 6-calendar-month intervals. 4. The Tables have been rearranged and considerably revised to improve clarity. Please see new Table 1-5. 5. Please see Supplementary Reference, Section 8.3. 6. The Tables have been rearranged and considerably revised to improve clarity. Please see new Table 1-4. Specifically for this item, this applies to whatever interrupting device is being tripped by the UFLS/UVLS. To the degree that the same interrupting devices are tripped by other Protection System components, the relevant Requirements apply. 7. The Tables have been rearranged and considerably revised to improve clarity. Please see new Table 1-5. 8. This interval is based on EPRI and other industry documents referencing these specific activities. 9. The Tables have been rearranged and considerably revised to improve clarity. Please see new Table 1-3. 10. The Tables have been rearranged and considerably revised to improve clarity. Please see new Table 1-1. 11. The Tables have been rearranged and considerably revised to improve clarity. Please see new Table 1-3. **12.** The Tables have been rearranged and considerably revised to improve clarity. Please see new Table 2. This requirement is now uniformly 24 hours as suggested within the comment.
SERC Protection and Control Sub-committee (PCS)	No	1. Clarifications need to be made on testing requirements on trip contacts relative to microprocessor vs. EM relays. There appears to be an inconsistency in the use of “check” vs. “verify” in the tables. 2. Also, Table 1B, in the second to last row, should be referring to UFLS rather than SPS. 3. Also, note that M2 incorrectly excludes distribution provider.

Organization	Yes or No	Question 1 Comment
		4. In battery maintenance table, we suggest that “cell/unit” be changed to “cell or unit.”
Response: Thank you for your comments. 1. The Tables have been rearranged and considerably revised to improve clarity. Please see new Table 1-5. 2. The Tables have been rearranged and considerably revised to improve clarity. Please see new Table 1-5. 3. Measure M2 has been corrected as suggested. **4.** The Tables have been rearranged and considerably revised to improve clarity. Please see new Table 1-4.		
BGE	No	Comment 1.1: In its decision to use “calendar years” with the maintenance intervals prescribed for most components the SDT has provided a framework that is consistent with a well-run PSMP but with enough flexibility to be practical. However BGE believes the application of this approach to short maintenance intervals, like three months for some battery maintenance will risk numerous violations due to practical scheduling constraints that are not a realistic threat to reliability. As the requirements are presently defined the inherent flexibility for battery maintenance that is nominally done on three month intervals may be as long as 1/3 of the interval or as short as one day (Our interpretation: Maintenance last done on January 1 is next due on April 1 and can be done no later than April 30. Maintenance done on Jan 31 is next due on April 30 and is overdue if done on May 1). The only practical solution is to increase the frequency so that the average intervals are significantly shorter than the nominal requirement.BGE recommends an alternate formulation for intervals if the nominal interval is less than one year. Some possible alternatives (assuming a three month nominal interval): Once per calendar quarter no later than the end of the quarter no earlier than one month before it. Four times per year, no more than 120 days apart no less than 60. Comment 1.2: On page 11, Row-3/Column-1 of Table-1a includes the following entry for functional trip testing:"Control and trip circuits with electromechanical trip or auxiliary contacts (except for microprocessor relays, UFLS or UVLS)". It is not clear why

Organization	Yes or No	Question 1 Comment
		electromechanical trip contacts in microprocessor relays are excluded. Comment 1.3: On page 12, Row-3/Column-3 of Table-1a includes the following Verification Task for Station DC Supplies: "Verify Battery cell-to-cell connection resistance". Multiple cell units do not provide the ability to measure cell-cell resistance.
Response: Thank you for your comments. 1. The intervals remain as prescribed within the Standard and are designed to be effective, clear, and consistently monitored for compliance; the SDT is not prescribing or suggesting what measures an entity may take within their program to assure compliance. 2. The Tables have been rearranged and considerably revised to improve clarity. Please see new Table 1-5. **3.** This element of the table has been modified to state, "Battery internal cell-to-cell or unit-to-unit connection resistance (where available to measure)" to address this comment.		
Constellation Power Generation	No	1. Constellation Power Generation (CPG) does not agree with the maximum maintenance interval for associated communication systems and station dc supply that has as a component any type of battery, which is 3 months. If the intent of the drafting team was to make this test quarterly (as recommended in IEEE-450), than the maximum interval should be 4 months. As written, for a registered entity to ensure they complete this test in an interval less than 3 months, they will most likely complete this test every 2 months. This causes two additional and unwarranted tests every year. CPG recommends an alternate formulation for intervals if the nominal interval is less than one year. Some possible alternatives (assuming a three month nominal interval): Once per calendar quarter no later than the end of the quarter no earlier than one month before it. Four times per year, no more than 120 days apart no less than 60. 2. CPG does not agree with differentiating between the different battery types. A suggestion would be to take the maximum maintenance interval for all the battery types, which is 6 years, and apply them across all types of batteries, eliminating the need to

Organization	Yes or No	Question 1 Comment
		differentiate between them. Furthermore, multiple cell units do not provide the ability to measure cell-cell resistance, and so that requirement should be removed. 3. CPG is not clear why electromechanical trip contacts in microprocessor relays are excluded in Table 1a.
Response: Thank you for your comments. 1. The intervals remain as prescribed within the Standard and are designed to be effective, clear, and consistently monitored for compliance; the SDT is not prescribing or suggesting what measures an entity may take within their program to assure compliance. 2. The appropriate maintenance activities and intervals differ considerably for various battery types. This element of the table has been modified to state, "Battery internal cell-to-cell or unit-to-unit connection resistance (where available to measure)" to address this comment. **3.** The Tables have been rearranged and considerably revised to improve clarity. Please see new Table 1-1.		
Exelon	No	Exelon does not completely agree with the minimum maintenance activities and maximum allowable intervals as suggested by SDT. Comments on minimum maintenance activities: 1. Reference Table 1a (Page 11) of Standard PRC-005-2: With regard to the maintenance activity: "Verify that the station battery can perform as designed by conducting a performance .....". The standard should clearly define what is meant by "perform as designed" to eliminate ambiguity in future interpretations. 2. Also, Table 1a Station dc supply (that has as a component Vented Regulated Lead-Acid batteries) discusses "modified performance capacity test of the entire battery bank". This needs additional clarification or should be reworded because modified test includes both the performance test (which is the capacity test) and the service test. Should be reworded to be "modified performance test". 3. Comments on maximum allowable intervals: Nuclear generating stations have refueling outage schedule windows of approximately

Organization	Yes or No	Question 1 Comment
		18 months or 24 months (based on reactor type). If for some reason the schedule window shifts by even a few days, an issue of potential non-compliance could occur for scheduled outage-required tasks. The possibility exists that a nuclear generator may be faced with a potential forced maintenance outage in order to maintain compliance with the proposed standard. For the requirements with a maximum allowable interval that vary from months to years (including 18 Months surveillance activities), the SDT should consider an allowance for NRC-licensed generating units to default to existing Operating License Technical Specification Surveillance Requirements if there is a maintenance interval that would force shutting down a unit prematurely or face non-compliance with a PRC-005 required interval. Therefore, Tables 1a, 1b & 1c should include an allowance for any equipment specifically controlled within each licensee's plant specific Technical Specifications to implement existing Operating License requirements if such a conflict were to occur. Please see additional comments under Q7.
Response: Thank you for your comments. 1. This concern is addressed within IEEE standards (specifically IEEE 450, IEEE 1188, and IEEE 1106) by their description and definition of a "performance test" as further established within this requirement. The SDT believes that entities involved in battery maintenance will be familiar with these IEEE standards. 2. The Tables have been rearranged and considerably revised to improve clarity. Please see new Table 1-4. **3.** The intervals and activities specified are believed by the SDT to be technically effective, in a fashion that may be consistently monitored for compliance. It is left to the the entity to determine how to align these requirements with requirements of other regulations and with operational concerns. Entities should be able to complete the activities with 18-month or shorter intervals without outages. See the SDT responses to your comments in Question 7.		
Black Hills Power	No	1. For Protective Relays, Table 1a Maintenance Activities has no requirement for verifying output contacts on non-microprocessor based relays. The actual contacts used for tripping should be verified by this activity.

Organization	Yes or No	Question 1 Comment
		2. For Protective Relays, Table 1b Maintenance Activities states "Verify correct operation of output actions that are used for tripping". This requirement is vague and needs to define whether all protection logic or conditions that would initiate a relay trip output are required to be simulated and tested to the relay tripping output contact. 3. For Voltage and Current Sensing Inputs to Protective Relays and associated circuitry, Table 1a references "current and voltage signals" and Table 1b references "current and voltage circuit signals". Need consistency or definitions to meet this requirement. 4. For Control and trip circuits with electromechanical trip or auxiliary (UFLS/UVLS Systems Only), Table 1a states "except that verification does not require actual tripping of circuit breakers or interrupting devices." This exception to the requirement seems to defeat the whole purpose of the standard and leaves a huge gap open to interpretation and conflict. -For Control and trip circuits with unmonitored solid-state trip or auxiliary contacts (UFLS/UVLS Systems Only), Table 1a states "except that verification does not require actual tripping of circuit breakers or interrupting devices." This exception to the requirement seems to defeat the whole purpose of the standard and leaves a huge gap open to interpretation and conflict. 5. For Station dc supply, Table 1a requirement includes "Inspect: The condition of non-battery-based dc supply." This is redundant with the requirements of the section Station dc supply (battery is not used) and should be removed from this section. 6. For Voltage and Current Sensing Inputs to Protective Relays and associated circuitry, a maximum interval of verification of 12 years seems to contradict the intent of the rest of the Maintenance standard which dictates 6 years on all of the other components. The requirement for these components should fall in line with the rest of the standard.
Response: Thank you for your comments. 1. The Tables have been rearranged and considerably revised to improve clarity. Please see new Table 1-1. 2. The Tables have been rearranged and considerably revised to improve clarity. Please see new Table 1-1. "Verify" is defined within		

Organization	Yes or No	Question 1 Comment
the PSMP defintion. 3. The Tables have been rearranged and considerably revised to improve clarity. Please see new Table 1-3. 4. The Tables have been rearranged and considerably revised to improve clarity. Please see new Table 1-5. This is an intentional difference between UFLS/UVLS and the remainder of the Protection Systems addressed within the Standard, because of the distributed nature of UFLS/UVLS and because these devices are usually tripping distribution system elements. 5. The Tables have been rearranged and considerably revised to improve clarity. Please see new Table 1-4. **6.** The Tables have been rearranged and considerably revised to improve clarity. Please see new Table 1-3. These devices are not typically subject to in-service degradation to the degree that those with 6-year intervals are. Entities have the latitude to perform maintenance more frequently than specified if they feel that such maintenance is needed.		
Duke Energy	No	General comment - the draft changes the word “verify” to “check” in several places; should use consistent phrasing throughout the standard. With regards to Table 1a, we have the following comments: 1. Control and trip circuits with electromechanical trip or auxiliary contacts (except for microprocessor relays. UVLS or UFLS) - We believe that while there may be value in a 6 calendar year cycle, this will be difficult to accomplish, since you either have to get outages scheduled or block protection, which risks reliability. Since this is essentially a re-commissioning check, the cycle should be 12 calendar years. Also 6 years appears to be in conflict with the system protection standard. 2. Control and trip circuits with unmonitored solid-state trip or auxiliary contacts (except for UVLS or UFLS) - agree with 12 calendar years as consistent with electromechanical above. 3. Control and trip circuits with electromechanical trip or auxiliary (UVLS or UFLS Systems Only) - 6 year cycle should be changed to 12 calendar years (see comment above on non-UVLS/UFLS). 4. Control and trip circuits with unmonitored solid-state trip or auxiliary contacts (UVLS or

Organization	Yes or No	Question 1 Comment
		UFLS Systems Only) - agree with change to 12 calendar years. 5. Station dc Supply (used only for UVLS or UFLS) - Strike the word "Station". We don't differentiate between dc supply used for UFLS and other protection. 6. Station dc supply - Change 18 calendar months to 24 months, since this testing requires generator outages. Nuclear plant fuel cycles can be longer than 18 months. 7. Associated communications systems - More clarity is needed regarding what is to be included in the definition of "Associated".
Response: Thank you for your comments. "Check" is not an element of the PSMP definition. The term has been replaced throughout the tables with whatever term of the definition is relevant. 1. The Tables have been rearranged and considerably revised to improve clarity. Please see new Table 1-5. The circuit itself is 12 years, but interval for the electromechanical devices such as aux or lockout relays remains at 6 years, as these devices contain "moving parts" which must be periodically exercised to remain reliable. 2. The Tables have been rearranged and considerably revised to improve clarity. Please see new Table 1-5. 3. The Tables have been rearranged and considerably revised to improve clarity. Please see new Table 1-5. 4. The Tables have been rearranged and considerably revised to improve clarity. Please see new Table 1-5. 5. The Tables have been rearranged and considerably revised to improve clarity. Please see new Table 1-4. 6. The SDT believes the specified intervals and activities are technically effective, and in a fashion that may be consistently monitored for compliance. The entity must determine how to best align these requirements with requirements of other regulations and with operational concerns. Entities should be able to complete the activities with 18-month or shorter intervals without outages. **7.** This portion of the definition of Protection System has been modified for clarity. Also, the Tables have been rearranged and considerably revised to improve clarity. Please see new Table 1-3.		
American Electric Power	No	1. In Table 1a for the component "Station dc Supply (used only for UVLS and UFLS)", the

Organization	Yes or No	Question 1 Comment
		interval prescribed is "(when the associated UVLS or UFLS system is maintained)" and the activity is to "verify the proper voltage of the dc supply". The description of the interval "(when the associated UVLS or UFLS system is maintained)" needs to be changed. Relay personnel do not generally take battery readings. The interval should read “according to the maximum maintenance interval in table 1a for the various types of UFLS or UVLS relays". The testing does not need to be in conjunction with the relay testing, it is only the test interval that is important, although relay operation during relay testing is a good indicator of sufficient voltage of the battery. 2. The monitoring and/or maintenance activities listed for batteries are not appropriate in Tables 1b and 1c. There are no commercial battery monitors that monitor and alarm for electrolyte level of all cells. Why not move the electrolyte level to the 18 month inspection and actually open the possibility of condition monitoring to commercially available devices? Or give an option to do the electrolyte check at other time intervals (perhaps 12 months) by visual electrolyte inspection and still allow the monitoring of other functions on the listed 6 year schedule using condition monitoring. It makes no sense to prescribe an unattainable condition monitoring solution. The way that the tables are written, there is no advantage to use the charger alarms since battery maintenance requirements are not reduced in any way.
Response: Thank you for your comments. 1. The Tables have been rearranged and considerably revised to improve clarity. Please see new Table 1-4. **2.** The Tables have been rearranged and considerably revised to improve clarity. Please see new Table 1-4.		
Great River Energy	No	1. In Table 1a section-Station DC Supply - 18 calendar months, under Maintenance Activities column, suggest changing under Verify: Battery terminal connection resistance To: Entire battery bank terminal connection resistance (This could have been interpreted as individual batteries) And change: Battery cell-to-cell connection resistance To: Battery cell-to-cell connection resistance, where an external mechanical connection is available.

Organization	Yes or No	Question 1 Comment
		2. In Table 1a-Station dc supply (that has a component Valve Regulated Lead-Acid batteries) suggest changing Max Maintenance Interval=3 Calendar Years or 3 Calendar Months to 4 Calendar Years or 12 Calendar Months. Our concern is that the insurance companies may push NERC maintenance intervals on all battery banks not associated with the BES. 3. Table 1a-Station dc supply (that has as a component Lead-Acid batteries) Max Maintenance Interval=6 Calendar Years suggest changing to 10 Calendar Years. Reason: performance tests may degrade the battery. 4. Table 1a-Station dc supply (that has as a component Nickel-Cadmium batteries) Max Maintenance Interval=6 Calendar Years suggest changing to 10 Calendar Years. Reason: performance tests may degrade the battery. 5. Table 1b -Level 2 Monitoring Attributes for Component in the row labeled (Control and trip circuitry) we suggest the following change: If a trip circuit comprises multiple paths, at least one of those paths is monitored. Alarming for loss of continuity or dc supply for trip circuits is reported to a location where action can be taken. 6. While all tripping circuits are not completely monitored, the trip coils and the outdoor cable runs are completely monitored. The only portion that would not be monitored is a portion of inter and intra-panel wiring having no moving parts located in a control house. Our company has extremely low failure rate of panel wiring and terminal lugging. I don't think that there is provision for moving control and trip circuitry to performance based maintenance? This control circuitry should be maintained less frequent than un-monitored trip circuits (6 years).

Response: Thank you for your comments.

1. The Tables have been rearranged and considerably revised to improve clarity. Please see new Table 1-4. This element of the Table has been modified to state, "Battery internal cell-to-cell or unit-to-unit connection resistance (where available to measure)" to address this comment.

Organization	Yes or No	Question 1 Comment
2. NERC Standards are limited to facilities and equipment related to the BES. How the Standard may be otherwise used is outside the scope of NERC Standards. 3. The SDT disagrees, and believes that a performance test at 6-year intervals is appropiate for Ni-Cad batteries. A properly maintained battery, according to various credible references (from IEEE, EEI, EPRI, various manufacturers, etc.), can easily handle multiple deep discharges over its expected life. 4. The SDT disagrees, and believes that a performance test at 6-year intervals is appropiate for Vented Lead Acid and Ni-Cad batteries. A properly maintained battery, according to various credible references (from IEEE, EEI, EPRI, various manufacturers, etc.), can easily handle multiple deep discharges over its expected life. 5. The Tables have been rearranged and considerably revised to improve clarity. Please see new Table 1-5. **6.** The Tables have been rearranged and considerably revised to improve clarity. Please see new Table 1-5. Nothing in the draft Standard (including Attachment A) precludes an entity from using performance-based maintenance for dc control circuits.		
Long Island Power Authority	No	1. In Table 1c it is required to report the detected maintenance correctable issues within 1 hour or less to a location where action can be taken to initiate resolution of that issue. Even for a fully monitored protection system component it can be difficult to report the action in 1 hour. LIPA recommends a 24 hour period for both Level 2 and Level 3 reporting of maintenance correctable issues. The time identified is report time and not response time to correct issue. 2. LIPA seeks clarification on “to a location where action can be taken”. Some examples in the FAQ will help in this clarification. 3. What type of documentation is required to show compliance that maintenance correctable issues have been reported? 4. What is the basis of the various Maximum Maintenance Intervals tabulated in Table 1a-Time based maintenance?
Response: Thank you for your comments.		

Organization	Yes or No	Question 1 Comment
1. The Tables have been rearranged and considerably revised to improve clarity. Please see new Tables 1-1 through 1-5 and Table 2. These Tables reflect your proposed change. 2. This is addressed in the Supplementary Reference document as posted with this draft (Section 8.1 and Section 13), and within the FAQ as posted with this draft Standard (V.3.D). 3. Specific effective forms of documentation are left to the entity to determine, but the SDT believes that this could include, among other things, work orders addressing the maintenance correctable issue. **4.** Please see Section 8.3 of the Supplementary Reference document.		
Northeast Utilities	No	1. In Table 1c it is required to report the detected maintenance correctable issues within 1 hour or less to a location where action can be taken to initiate resolution of that issue. Even for a fully monitored protection system component it can be difficult to report the action in 1 hour. Recommend a 24 hour period for both Level 2 and Level 3 reporting of maintenance correctable issues. 2. Additionally, please clarify meaning of "to a location where action can be taken".
Response: Thank you for your comments. 1. The Tables have been rearranged and considerably revised to improve clarity. Please see new Tables 1-1 through 1-5 and Table 2. These tables reflect your proposed change. **2.** This is addressed in the Supplementary Reference document as posted with this draft (Section 13), and within the FAQ as posted with this draft Standard (V.3.D).		
MidAmerican Energy Company	No	1. In the tables trip circuit has been replaced by "control and trip circuit". From the context of the standard and the reference and frequently asked question documents it is clear that the requirement is to test the trip circuit only. Adding the word "control' introduces ambiguity and the potential to imply the closing circuit of the interrupting device also requires testing under the standard. The word "control" should be removed. On this same subject the nomenclature in Table 1b for type of protection system component is

Organization	Yes or No	Question 1 Comment
		not consistent with Table 1a.In Table 1b in the Level 2 Monitoring Attributes for Component column for Relay sensing for centralized UFLS or UVLS systems there is a reference to SPS. This reference should likely be to UFLS/UVLS. 2. In Table 1a functional testing of associated communications systems is included with a maximum maintenance interval of 3 calendar months. Testing of this equipment at that frequency is not believed to be necessary. It is suggested that the interval be changed to 12 calendar months. 3. For control and trip circuit maintenance the requirement includes "a complete functional trip test". In order to accomplish this type of testing given current design of lock-out relay and interrupting device trip circuitry multiple breakers and line terminal outages would be required simultaneously. In addition complete functional testing has the potential to result in unintentional tripping of equipment that could cause equipment damage and customer outages. Segmentation of trip circuits by lifting wires has the potential for incorrect restoration following testing. This type of testing has the potential to degrade system reliability as multiple entities schedule this work. An alternate to complete functional testing that does not potentially degrade system reliability should be substituted.
Response: Thank you for your comments. 1. The Tables have been rearranged and considerably revised to improve clarity. Please see new Table 1-5. 2. The SDT believes that the 3-month interval is proper for unmonitored communications systems. **3.** The Tables have been rearranged and considerably revised to improve clarity. Please see new Table 1-5. The interval for maintenance of electromechanical devices such as aux or lockout relays remains at 6 years, as these devices contain "moving parts" which must be periodically exercised to remain reliable.		
Nebraska Public Power District	No	1. It would be very helpful in Table 1a, 1b, and 1c to reference the FAQ or Supplemental Reference by page number and section number for the corresponding

Organization	Yes or No	Question 1 Comment
		Maintenance Activity statements. 2. Table 1a, Control and Trip Circuits with electromechanical trip or auxiliary contact - how is the control and trip circuit functional trip test performed without affecting the BES or without tripping more than just the breaker (trip coil)? What is the basis for an actual trip of the breaker that will affect the BES? Functional trip testing will require extensive analysis and could involve an extensive testing evolution to ensure the correct circuit is tested without unexpected trip of other components, particularly for generator protection systems. The complexity of the system and the test would be conducive to an error that resulted in excessive tripping, thus affecting the reliability of the BES. It would seem that the potential for an adverse affect from this test would be greater than the benefit gained of testing the circuit. In addition, scheduling outages to perform the functional trip testing in conjunction with other outages required to perform maintenance and other construction activities will be difficult due to the large number of outage requirements for the functional testing. This will challenge the BES more often and thus reduce reliability. 3. 2. Table 1a, Control and Trip circuits with electromechanical trip or auxiliary contacts - What is the differentiation between control and trip circuits? The FAQ appears to use the term interchangeably. 4. Table 1a, associated communication systems - What is the basis for checking that the associated communication equipment is functioning every 3 calendar months for unmonitored components? NPPDs experience indicates that a check every 6 months is sufficient.

Response: Thank you for your comments.

1. The Tables have been rearranged and considerably revised to improve clarity. Please see new Tables 1-1 through 1-5. Doing as you suggest would make the supporting information with the FAQ and Suppementary Reference part of the Standard, and this would add extensive and unnecessary prescription to the Standard.

2. The Tables have been rearranged and considerably revised to improve clarity. Please see new Table 1-5. These devices contain

Organization	Yes or No	Question 1 Comment
"moving parts" which must be periodically exercised to remain reliable. 3. The Tables have been rearranged and considerably revised to improve clarity. Please see new Table 1-5. The FAQ has been modified. 4. The SDT believes that the 3-month interval is proper for unmonitored communications systems.		
Y-W Electric Association, Inc.	No	Many of the changes to the proposed standard are reasonable and improve the clarity of the standard and its requirements. However, Y-WEA concurs with Central Lincoln and FMPA on their comments regarding the testing of battery cell-to-cell connection resistance. Many types of stationary batteries are actually blocks of two or more cells that are internally connected. This requirement would necessitate either some sort of feasibility exception process (which, as shown by the TFE process with the CIP standards can be very difficult, cumbersome, and time-consuming to develop and administer) or replacement of the batteries in question, which would pose enormous burdens on small entities that must comply with this standard. The language in this requirement should be changed from "cell-to-cell" to "unit-to-unit" in order to avoid these issues.
Response: Thank you for your comments. The Tables have been rearranged and considerably revised to improve clarity. Please see new Table 1-4. This element of the table has been modified to state, "Battery internal cell-to-cell or unit-to-unit connection resistance (where available to measure)" to address this comment.		
Progress Energy Carolinas	No	1. The modified definition of "Protection System" (page 2 of the clean version of PRC-005-2) uses the terminology "control circuitry associated with protective functions" whereas Table 1a rows 3-6, Table 1b Rows 3 and 5, and Table 1c Row 4 uses the terminology "control and trip circuits." This is a conflict. "Control" implies that the standard applies to closing/reclosing circuits as well. We do not believe that is the intent. 2. Row 7 of Table 1a (page 10 of the clean version of PRC-005-2) indicates that proper

Organization	Yes or No	Question 1 Comment
		voltage of the station dc supply must be verified when the associated UVLS or UFLS maintenance is performed. It is not clear whether this requirement is over and above the quarterly and 18-month battery maintenance listed elsewhere in the table or is it the only battery maintenance required for UVLS and UFLS systems? If the intent is to check the station dc supply only when UVLS and UFLS maintenance is performed, the other rows addressing station dc should be revised to exclude UVLS and UFLS. 3. Row 4 of Table 1b (page 14 of the clean version of PRC-005-2) indicates that remote alarms must be verified every twelve calendar years for control circuitry (trip circuits) (except UFLS/UVLS) provided "Monitoring of Protection System component inputs, outputs, and connections" exists. Clarification should be made to indicate how to monitor inputs. For example, a breaker auxiliary switch is relied upon to communicate breaker status to a protective relay. If the switch is out of adjustment so that incorrect breaker status is reported to the relay, the relay may not operate when needed. Could proper operation of the auxiliary contacts be credited through in-service operation or the six-year breaker operation maintenance? 4. The term "calendar years" is used to define the maximum intervals. Does this mean that a six-year PM could go one-day shy of seven years? For example, if a six-year maintenance PM was last performed on 1/1/2010, it would be due on 1/1/2016. Could this allow until 12/31/2016 to complete the maintenance? 5. Table 1b, Row 14 (Row 2 on page 17): Under the "Level 2 Monitoring Attributes for Component," UFLS/UVLS should be referenced instead of SPS. 6. Clarifications need to be made on testing requirements on trip contacts relative to microprocessor vs. EM relays. 7. There appears to be an inconsistency in the use of "check" vs. "verify" in the tables. 8. In battery maintenance table, we suggest that "cell/unit" be changed to "cell or unit."
Response: Thank you for your comments.		

Organization	Yes or No	Question 1 Comment
1. The Tables have been rearranged and considerably revised to improve clarity. Please see new Table 1-5. 2. The Tables have been rearranged and considerably revised to improve clarity. Please see new Table 1-4. 3. The Tables have been rearranged and considerably revised to improve clarity. Please see new Table 1-5. To the degree that in-service test-operating of the breaker also performs the specified maintenance on other portions of the Protection System, the entity should be able to document and "take credit" for it. 4. Your explanation of "6 Calendar Years" is correct. 5. The Tables have been rearranged and considerably revised to improve clarity. Please see new Tables 1-1 through 1-5. 6. The Tables have been rearranged and considerably revised to improve clarity. Please see new Table 1-1 and 1-5. 7. "Check" is not an element of the PSMP definition. This term has been replaced throughout the Tables with whatever term of the definition is relevant. **8.** The Tables have been rearranged and considerably revised to improve clarity. Please see new Table 1-4.		
PPL Supply	No	PPL Generation, on behalf of the entities listed above, has the following comments on the dc entries in these tables: 1. Table 1a, Table 1b, Table 1c- Station DC supply - Maintenance Activities - references substation batteries. For generators, shouldn't that reference be station battery? Substation implies an association strictly with transmission, not generation. 2. Station DC supply - verify Battery continuity. What is the technical basis for this requirement? Neither battery installation and operation instructions nor technical reviews explain the basis for how this verification is supposed to work. NERC's Protection System Maintenance: A Technical Reference does not address this requirement. The Frequently-Asked Questions provides some ways that this verification can be completed. However, one example is tied to the microprocessor battery chargers. If there is a technical basis for this requirement, it should be provided. 3. Condition based monitoring on station dc supply - it appears the Table 1b excludes any

Organization	Yes or No	Question 1 Comment
		condition based monitoring of the batteries because of the requirement for monitoring electrolyte level, individual cell state of charge, cell to cell and battery terminal resistance. Most monitoring equipment does not monitor those functions. 4. In general, the Tables are especially confusing in the dc system area. The "lines" overlap and need to be labeled, so they can be referenced in a maintenance document to show how the appropriate program can be followed. Each line should be separate in the function stated, so one can identify what has to be done to comply. 5. Provide examples of "non-battery-based dc equipment" that is covered under this standard. 6. For dc supply, the changes from the Sept. 2007 NERC "Protection System Maintenance", A Technical Reference seem too restrictive. The Sept. 2007 document contained a solid maintenance program. What is the basis for the change?
Response: Thank you for your comments. 1. The Tables have been rearranged and considerably revised to improve clarity. Please see new Table 1-4. This has been corrected in the revision. 2. Please see the FAQ (I.5.B, I.5.C and I.5.D) 3. The Tables have been rearranged and considerably revised to improve clarity. Please see new Table 1-4. 4. The Tables have been rearranged and considerably revised to improve clarity. Please see new Table 1-4. 5. The SDT has been advised that entities are considering or using technologies such as flywheels and fuel cells. Also, we have been told that some entities are using modern battery chargers without the battery. **6.** When developing the original technical reference, the SPCTF was not challenged to develop a complete, measurable Standard. The SDT used the original document as a starting point to develop actual requirements, etc.		
San Diego Gas & Electric	No	1. Proofing of CT circuits is not always trivial. Given this function is not presently being performed and documented by the company, a reasonable grace period would be

Organization	Yes or No	Question 1 Comment
		required to achieve compliance. The company believes present practice, such as verification that relay current inputs are not zero and that phases are balanced, is a reasonable indication individual CTs are functioning properly. 2. An entities protection system maintenance program is a Time Based Maintenance program. The protection system maintenance program describes the maintenance intervals and states that the protection system maintenance is triggered every 4 years. The maintenance program describes that the due date for compliance is 6 months past the trigger date to allow for planning and scheduling of the maintenance activity. Therefore the actual due date for the 4 year maintenance interval is 4 years and six months from the last maintenance completion date. The four year six month time based interval is within the six year maximum time based interval as required by PRC-005-2. Given the above, is the four year six month interval as described in the entities maintenance program compliant with PRC-005-2?
Response: Thank you for your comments. 1. The Tables have been rearranged and considerably revised to improve clarity. Please see new Table 1-3. The intervals remain as prescribed within the Standard and are designed to be effective, clear, and consistently monitored for compliance; the SDT is not prescribing or suggesting what measures an entity may take within their program to assure compliance. "Grace periods" within the Standard are not measurable, and would probably lead to persistently increasing intervals. However, an entity may establish an internal program with grace-period allowance, as long as the entire program (including grace periods) does not exceed the intervals within the Standard. Simply observing non-zero instrument transformer outputs may not be sufficient to determine that the values are acceptable. **2.** "Grace periods" within the Standard are not measurable, and would probably lead to persistently increasing intervals. However, an entity may establish an internal program with grace-period allowance, as long as the entire program (including grace periods) does not exceed the intervals within the Standard.		
Springfield Utility Board	No	SUB appreciates the effort to try to strike a balance between specificity around a specific standard and flexibility to meet the requirement under the standard. The maximum

Organization	Yes or No	Question 1 Comment
		allowable intervals don't seem unreasonable combined with the implementation schedule. However, it seems that the proposed changes stray toward a proscriptive set of maintenance that 1) does not allow for an alternate method of testing and 2) sets unrealistic testing requirements. For example, battery terminal to terminal testing is not feasible with all battery systems. This is a consistent message SUB has heard from others as well. First and foremost - a test or maintenance must be done for each device within the defined interval. With that in mind...SUB's preference would be that the maintenance activities focus on what specifically must be done for a device (may be type specific) vs. what could be done for a device for compliance (as an example of what an auditor could look for when conducting an audit) vs. alternative best-practices for testing and maintenance that the entity demonstrates constitutes as maintenance or test. With regard to the first (maintenance activities focus on what specifically must be done for a device) - it seems that this would apply to a limited number of devices With regard to the second (maintenance activities focus on what specifically can be done for a device) - it seems that this would apply broad number of devices and the list of what can be done should be broad to cover a range of different devices that provide the same function. With regard to the last (alternative best-practices for testing and maintenance that the entity demonstrates constitutes as maintenance or test), it would be helpful to have a mechanism outside the standard itself to either have a NERC technical group craft a series of criteria that must be met for an acceptable alternative maintenance or the entity document the criteria used to determine an adequate test and provide for a test that meets that set of criteria). It would be anticipated that these would fall under a minority of devices.
Response: Thank you for your comments.		

Organization	Yes or No	Question 1 Comment
The Tables have been rearranged and considerably revised to improve clarity. Please see new Tables 1-1 through 1-5. In the draft Standard, the SDT is defining the basic parameters for an effective PSMP; the entity is required to develop its program with specific activities that would satisfy those basic parameters.		
The Detroit Edison Company	No	Suggest that the interval for cell ohmic testing on VRLA batteries be changed to 12 months. Also, include ohmic testing of NiCad batteries at 18 mos. as an option.
Response: Thank you for your comments. The activity related to this interval is to verify various basic operating parameters. The SDT believes that extension of verification of these parameters beyond the interval within the Standard is inappropriate.		
NorthWestern Corporation	No	Table 1a - Rows 3 & 4 (control and trip circuits) - add language in the Maintenance Activities - "except that verification does not require actual tripping of circuit breakers or interrupting devices"
Response: Thank you for your comments. The Tables have been rearranged and considerably revised to improve clarity. Please see new Table 1-5.		
We Energies	No	1. Table 1a, Protective Relays: Change 1st line to: “Test and calibrate if necessary the relays...”Table 1a, Protective Relays: 3rd line: Change “check the relay inputs...” to “verify the relay inputs...”. The term “check” is not defined, whereas “verify” is. Tables 1a & 1b We agree that six / twelve years is an acceptable interval for relay maintenance. 2. Table 1a & 1b, Control & Trip Circuits: The proposed addition to require tripping circuit breakers during Protection System maintenance is detrimental to BES reliability and should be removed. Ï 3. Generating unit protection system maintenance is done during scheduled outages. The high voltage breaker on a generating unit often remains energized to backfeed and supply station auxiliaries when the generator is offline. The proposed requirement will increase the amount of equipment requiring an outage for maintenance, and possibly

Organization	Yes or No	Question 1 Comment
		the length of the outage, resulting in significantly more equipment out of service as well as increased costs. This requirement also results in greater maintenance efforts and costs when there are redundant protection system equipment (breaker trip coils, lockout relays, etc), which is contrary to good practice and reliability. 4. Many of the breakers that We Energies, as the Distribution Provider, trips from its BES protection systems are not owned by We Energies and are owned by a separate transmission company. The trip testing and maintenance of the transmission company may not coincide with our relay maintenance testing program. The standard shall have allowances for the entity to ONLY test or maintain equipment that it OWNS! 5. Table 1a, Station dc supply: a. The activity to verify the state of charge of battery cells is too vague, and requires more specific action. We assume that the drafting committee is recommending specific gravity measurements. Specific gravity measurements have not been shown to an accurate indicator on state of charge. In addition, as shown in the nuclear power industry, there is no established corrective action that is taken based on specific gravity results (eg. Don't require a test where there is no acceptable corrective action). b. The activities to "verify battery continuity" and "check station dc supply voltage" are also vague and need to be more clearly specified what is intended. c. The 3 month time interval for battery impedance testing is too frequent. 18 month or annual testing is more appropriate. d. The 3 calendar year performance or service test is too frequent and will actually remove life from a battery and reduce reliability. Recommend capacity testing no more that every 5 years and more frequent test if the capacity is within 10% of the end of life or design. This is consistent with the nuclear power industry. 6. Table 1b, Station dc supply: Recommend a change or addition to Table 1b - Recommend a level 2 monitoring (not just a default to the level 1 maintenance activities)

Organization	Yes or No	Question 1 Comment
		which allows for the removal of quarterly "check" of electrolyte levels, DC supply voltage, and DC grounds - if station DC supply (charger) voltage is continuously monitored (eg. one should not have detrimental gassing of a battery if the float voltage of the battery is properly set and monitored). 7. Table 1a, Associated communications systems: The requirement to verify functionality every three months is excessive; verifying this every twelve months is adequate. 8. Tables 1a & 1b - Although the latest standard provided some additional clarification, more clarification is required on what maintenance / testing is ONLY required for UFLS/UVLS protection systems vs. BES protection systems (eg. UFLS / UVLS systems - Is a verification of proper voltage of the DC supply the only battery or DC supply required (eg. no state of charge, float voltage, terminal resistance, electrolyte level, grounds, impedance or performance test, etc.)?

Response: Thank you for your comments.

1. The Tables have been rearranged and considerably revised to improve clarity. Please see new Table 1-1. "Check" is not an element of the PSMP definition. This term has been replaced throughout the Tables with whatever term of the definition is relevant.
2. These devices contain "moving parts" which must be periodically exercised to remain reliable.
3. The intervals and activities specified are believed by the SDT to be technically effective, in a fashion that may be consistently monitored for compliance. It is left to the the entity to determine how to align these requirements with operational concerns.
4. The SDT contends that "its Protection Systems" is synonymous with "Protection Systems that it owns."
5. a.The SDT is not specifically requiring specific gravity tests, although they may be one effective method of meeting the requirement. Another method is to measure the individual cell voltage. R4 establishes that the entity must initiate resolution of maintenance-correctable issues, so it IS necessary to correct problems that are found.

   b.The Tables have been rearranged and considerably revised to improve clarity. Please see new Table 1-4. The SDT does not prescribe specific activities to satisfy the requirements, although some guidance may be found in the FAQ (II.5.B, II.5.C and

Organization	Yes or No	Question 1 Comment
II.5.D) and Supplementary Reference Section 15.4. c. The activity related to this interval is to verify basic operating parameters. The SDT believes that extension of verification of these parameters beyond the interval within the Standard is inappropriate. d. The SDT disagrees, and believes that a performance test at 3-year intervals is appropriate for Valve-Regulated Lead Acid batteries. A properly maintained battery, according to various credible references (from IEEE, EEI, EPRI, various manufacturers, etc.) can easily handle multiple deep discharges over its expected life. 6. The Tables have been rearranged and considerably revised to improve clarity. Please see new Table 1-4. 7. The SDT believes that the 3-month interval is proper for unmonitored communications systems. **8.** The Tables have been rearranged and considerably revised to improve clarity. Please see new Table 1-4.		
Hydro One Networks	No	1. Table 1a: a. V and I sensing to relays - 12 years? Why not perform this activity with maintenance activities associated with relay maintenance so that they line up? It would only be an incremental amount of work to perform this with associated relay maintenance work b. Removal of requirement for testing of unmonitored breaker trip coils? Is it really the intention of the SDT to remove a requirement that would drive the industry to install TC monitors on breakers to improve reliability? c. UFLS/UVLS DC control and trip circuits - Due to the distributed nature of this program, random failures to trip are not impactive to the overall operation of the UFLS protection. There should be no requirement to check the DC portion of these protections any more often than the DC circuit checks associated with that LV breaker. Since it is clear the requirement does not include the need to trip the breakers why the need to check the trip paths? Deletion of this requirement leaves the requirement to check only the relays and relay trip outputs from the protections every 6 years (or as often as the protective relay component type). d. Along the same lines as the above comment should the maintenance activities for

Organization	Yes or No	Question 1 Comment
		"UVLS and UFLS relays that comprise a protection scheme distributed over the power system" not be the same as "Protective Relays" 2. Table 1c: a. Level 3 attributes for "Associated communications systems" might better read "Evaluating the performance and quality of the channel as well as the performance of any interface to connected protective relays and alarming if the channel/protective relay connections do not meet performance criteria" b. We believe that some of the proposed maintenance intervals for station DC supply are too stringent and that they would not produce significant increase in reliability to justify associated incremental expenditure. For example we suggest that the following changes are considered:- The interval for electrolyte level check for all batteries except VRLAs and internal measured cell/unit Ohmic value for VRLAs be extended to 6 months instead of current time period of 3 months.- The performance or service capacity test of the VRLA battery banks to be extended from 3 years to 5 years.

Response: Thank you for your comments.

1. a. This activity CAN be performed with the relays (for example, every other relay interval) if the entity so desires.
   b. The Tables have been rearranged and considerably revised to simplify and improve clarity. Please see new Table 1-5. Specific to your comment, the SDT initially specified inspection of trip-coil monitoring functions at intervals of 3 calendar months, with tripping otherwise requried annually. This has been revised to simply require tripping at 6-calendar-month intervals.
   c. The Tables have been rearranged and considerably revised to improve clarity. Please see new Table 1-5.
   d. This is an intentional difference between UFLS/UVLS and the remainder of the Protection Systems addressed within the Standard, because of the distributed nature of UFLS/UVLS and because these devices are usually tripping distribution system elements.
2. a. The Tables have been rearranged and considerably revised to improve clarity. Please see new Table 1-3.

Organization	Yes or No	Question 1 Comment
b. The Tables have been rearranged and considerably revised to improve clarity. Please see new Table 1-4.		
Arizona Public Service Company	No	The associated maintenance activities are too prescriptive. The activities needed to ensure the reliable service of the relay or device should be left up to the discretion of the utility.
Response: Thank you for your comments. The SDT disagrees. In the draft Standard, the SDT is defining the basic parameters for an effective PSMP; the entity is required to develop its program with specific activities that would satisfy those basic parameters.		
Manitoba Hydro	No	1. The monitoring attributes required to achieve level 2 monitoring of Station DC supply seem excessive. We are not aware of any other utilities doing automatic monitoring all 6 attributes required. In particular automatic monitoring of electrolyte level & battery terminal resistance does not seem practical. 2. There is inconsistency between Table 1 and the FAQ. In the Group by Monitoring Level section of the FAQ it indicates that a battery with low voltage alarm would be considered to have level 2 monitoring. 3. In Table 1C under the heading "Maximum Maintenance Interval" some of the entries are stated as being "Continuous". In the case of other maintenance activities the descriptor for Maintenance Interval indentifies the maximum period of time that may elapse before action must be taken. "Continuous" implies continuous action; however, in reality continuous monitoring enables no maintenance action to be taken until such time as trends indicate the need to do so. Therefore we recommend that where the maintenance interval be changed to read "Not Applicable".
Response: Thank you for your comments. 1. The Tables have been rearranged and considerably revised to improve clarity. Please see new Tables 1-4. 2. The FAQ has been modified. (See the examples in Section V.) **3.** The Tables have been rearranged and considerably revised to improve clarity. Please see new Tables 1-1 through 1-5.		

Organization	Yes or No	Question 1 Comment
MRO's NERC Standards Review Subcommittee (NSRS)	No	The NSRS feels additional changes are needed. 1. The functional testing requirement should be altered or removed as it increases the amount of hands-on involvement and the opportunity for human error related outages to occur, thereby introducing a greater risk to decrease system reliability. As noted on p. 8 in the supplementary reference document, "Experience has shown that keeping human hands away from equipment known to be working correctly enhances reliability." By removing circuits from service on the proposed timelines for functional testing, the chance for human error is greater than a misoperation from faulty wiring. Alternatively, entities may choose to schedule more planned outages to conduct their functional testing in order to limit the risk of unplanned outages resulting from human error. Under this scenario, more elements will be scheduled out of service on a regular basis, thereby reducing transmission system availability and weakening the system making it more challenging to withstand each subsequent contingency (N-1). Thus testing an intact system is more desirable than taking it out of service for testing. 2. While the SDT has included language in the draft standard to use fault analysis to complete maintenance obligations, in practicality, this option does not offer any relief to taking outages to perform functional tests. Nearly all BES circuit breakers are equipped with dual trip coils. Identifying which trip coil operated for a fault only covers the one trip coil. Functional tests would still be needed on the other. The likelihood of having multiple trips on a given line in the course of several years is very low. Given it can take a year to schedule some outages; planning maintenance with random faults is unpractical and will create unacceptable risk to compliance violations. A better approach is to use the basis in schedule A, but extend this to cover the entire protection schemes. The document should establish target goals for mis-operation rates (dependability and security). This would allow the utilities to develop cost effective programs to increase reliability. The utilities would have incentives to replace poorly performing communications systems; they would be able to quantify the value of upgrading relay systems.

Organization	Yes or No	Question 1 Comment
Response: Thank you for your comments. 1. The intervals and activities specified are believed by the SDT to be technically effective, in a fashion that may be consistently monitored for compliance. The entity must determine how to align these requirements with operational concerns. **2.** Operational results, if desired by an entity, MAY be used to meet maintenance requirements to the degree that it verifies, etc., the relevant performance. Whether their use is effective for a specific entity is left to the entity to determine. "Maintenance correctable issues", which may result in part from misoperations, are a part of using Attachment A to develop a performance-based PSMP.		
Tennessee Valley Authority	No	The requirement to measure internal ohmic values of the station dc supply batteries every 18 months is excessive. The interval should be 36 months. Our experience from performing our routine maintenance program including cell impedance testing at 3-year intervals has been that the program is fully adequate in monitoring bank condition.
Response: Thank you for your comments. The Tables have been rearranged and considerably revised to improve clarity. Please see new Table 1-4. The activity related to this interval is to verify various basic operating parameters. The SDT believes that extension of verification of these parameters beyond the interval within the Standard is inappropriate.		
Bonneville Power Administration	No	The requirements pertaining to dc control circuitry are confusing. 1. To start with, a definition or further explanation is required for the term "auxiliary contact". Is this strictly a breaker "a" or "b" switch, or does this include lockout relay contacts, etc.? 2. Another confusing point is that the term trip circuit is used in several places throughout the tables, but it is not included in the definition of Protection System, where the term dc control circuitry is used. It is important to use consistent terminology throughout the definition and the standard. 3. The requirements for (dc) control circuits in Table 1a are fairly straightforward, but in

Organization	Yes or No	Question 1 Comment
		Table 1b control circuits are broken down into three parts: trip coils and auxiliary relays; trip circuits; and control and trip circuitry. It is very unclear exactly what each of these three parts includes. In Table 1c, control circuitry is covered as a single element. Please provide clarity to what is included in each part of a control circuit in Table 1b and the monitoring attributes of each. Also, please be consistent in the treatment of control circuits throughout the three tables. 4. Table 1a, SPS, BPA does not understand the following segment of this paragraph "The output action may be breaker tripping, or other control action that must be verified, but may be verified in overlapping segments. A grouped output control action need be verified only once within the specified time interval." In one sentence, it says you can test a SPS in segments - and in the next sentence it says you have to verify the grouped output control action at least once within the specified time interval. It seems that the sentences contradict themselves. 5. Table 1b, Control and trip circuitry - "Monitoring of the continuity of breaker trip circuits along with the presence of tripping voltage supply all the way from relay terminals (or from inside the relay) through to the trip coil(s)..." To monitor the trip path as proposed in this Standard would cost some serious time and $$. 6. BPA does not believe there is a way to meet level two monitoring for batteries. In addition, some of the maintenance tasks need to be defined:- monitoring the electrolyte level is not commercially available.- the state of charge of each individual cell may need to be better defined. There are means to verify the state of charge of the entire bank, but not each individual cell. 7. Since a device to provide level 2 monitoring is not commercially available, we would be forced to follow level 1 maintenance guides, which would require maintenance of communication batteries every three months. Many of these batteries are not accessible during 9 months of the year except via snow-cat or helicopter. We currently monitor for some of the level 2 requirements, but not all. Our current practices of monitoring and yearly maintenance supplemented by opportunity inspections have

Organization	Yes or No	Question 1 Comment
		successfully identified problems before we lost DC power to any of our communication facilities. VRLA type batteries: - battery continuity needs to be defined. 8. In regards to the maximum allowable intervals; the frequency with which BPA performs the 18 month maintenance tasks as prescribed in the standard are on a 24 month interval along with visual inspections and voltage measurements weekly to bi-weekly. BPA has seen success with this maintenance program with the ability to identify suspect cells or entire banks with adequate time to perform corrective actions such as repairs or replacements. BPA also does not perform routine capacity testing, this is an as required maintenance task to confirm/validate our other test results if needed. Our suggestion would be to extend the maintenance intervals beyond 18 months, and to provide some clarity on the above items.

Response: Thank you for your comments.

1. The Tables have been rearranged and considerably revised to improve clarity. Please see new Table 1-5. Please see Section 15.3 of the Supplementary Reference Document and the FAQ (II4.E.).
2. The Tables have been rearranged and considerably revised to improve clarity and consistency. Please see new Table 1-5.
3. The Tables have been rearranged and considerably revised to improve clarity and consistency. Please see new Table 1-5.
4. The Tables have been rearranged and considerably revised to improve clarity and consistency. Please see new Table 1-5.
5. The Tables have been rearranged and considerably revised to improve clarity and consistency. Please see new Table 1-5.
6. The Tables have been rearranged and considerably revised to improve clarity. Please see new Table 1-4. Also, the SDT believes that there are devices available to monitor electrolyte levels.
7. The FAQ (II.5.K) advises that “communications system batteries” are not “station batteries” and are maintained with the communications systems.
8. The activity related to this interval is to verify various basic operating parameters. The SDT believes that extension of verification of these parameters beyond the interval within the Standard is inappropriate.

Organization	Yes or No	Question 1 Comment
Public Service Enterprise Group ("PSEG Companies")	No	The SDT is to be commended for the work and details included in the most recent draft revision. The standard - with associated references is easier to interpret. 1. The sections on DC supply are too restrictive. Quartile checks of VLA electrolyte levels for unmonitored systems is reasonable, however the option of checking the electrolyte levels and voltages with less frequency is not an option with systems that have voltage alarm notification and ground detection monitoring alarm notification unless all level 2 attributes are followed. The level 2 monitoring attributes are too comprehensive to allow for a suggested alternative less restrictive interval of 6 months to a year. Suggest there be an additional option for level 2 monitoring that includes voltage level and ground alarms with a 6 month maintenance activity interval. 2. The perception of table 1a page 12 for station DC supply - “used for UVLS and UFLS” is a maintenance activity to verify proper DC supply voltage when the UVLS and UFLS system is maintained. This is the only DC supply maintenance activity for those applications and the other more rigorous maintenance activities do not apply? If this is a correct interpretation specifically list that as such in the maintenance activity description (State the other DC supply maintenance activities are not applicable for UVLS and UFLS). The maintenance intervals for station DC supply for level 1 and 2 monitoring does not appear to be consistent and is somewhat confusing. A battery system with level 2 monitoring attributes for components has intervals of 6 years, and then in next section states that no level 2 attributes are defined - use level 1 maintenance activities. Suggest that all DC supply / batteries be broken out all be included in one separate - stand alone table with varied maintenance requirements based on monitoring attributes. 3. The maintenance activities shown on table 1b on page 19 for Station DC supply is intended for VLA batteries? If so add that in component definition. 4. For DC systems that use a storage battery, suggest that chargers be eliminated as other required maintenance activities will expose any problems with the charger. 5. The requirements of performing a capacity test every 6 years during the initial service

Organization	Yes or No	Question 1 Comment
		life of a VLA battery in addition to the other maintenance activities are too restrictive and will cause extensive outages of the affected equipment. Suggest that this frequency be extended to 10 years for VLA batteries for the first iteration if all the other maintenance activities are followed. Failure rate of VLA in first 10 years is extremely low. Other maintenance activities will expose significant issues.
Response: Thank you for your comments. 1. The Tables have been rearranged and considerably revised to improve clarity. Please see new Table 1-4. 2. The Tables have been rearranged and considerably revised to improve clarity. Please see new Table 1-4. 3. The Tables have been rearranged and considerably revised to improve clarity. Please see new Table 1-4. 4. If the charger fails, the battery will quickly discharge via normal dc loads, and be unable to adequately serve the Protection System. **5.** The SDT disagrees, and believes that a capacity test at 6-year intervals is appropiate for Vented Lead Acid batteries.		
US Bureau of Reclamation	No	1. There is no reliability based justification to alter the standards to include allowable intervals. 2. The intervals prescription for performance based PSMP virtually eliminates the capability of smaller utilities who do not have a large equipment database to justify a performance based system that may be sound based on their experience. This overly prescriptive approach should be eliminated and return to allowing utilities to justify their programs. The standard should return to addressing real reliability impacts as required by law. This would be to develop a maintenance required which identifies that if it is shown that an event in which reliability is impacted by the utilities PSMP, as evidenced by disturbance reports, the utility would be required to submit to the RRO a corrective action plan which addresses how the PSMP will be revised and when compliance with that PSMP is to be achieved. 3. Finally, the standard presumes that components within a BES Element will cause a reliability impact to the BES. In numerous meeting with NERC and WECC it was

Organization	Yes or No	Question 1 Comment
		emphasized that a reliability impact has been described as causing cascading outages or causing loss of service to load above a certain magnitude. The BES has an ability to absorb element outages resulting from a variety of causes without impact load or resulting in cascading outages.
Response: Thank you for your comments. 1. FERC Order 693 directs NERC to establish maximum allowable intervals. 2. Small entities are permitted to aggregate their components with similar components of other entities to meet the component populations, as long as the programs are (and remain) similar – see Section 9 of the Supplementary Reference, the FAQ (IV.3.A) and the associated footnote to Attachment A. Decreasing the component population below the requirements of Attachment A will result in an unsound program due to component populations that are not statistically significant. **3.** The SDT believes that Protection Systems that trip (or can trip) the BES should be included. This position is consistent with the currently-approved PRC-005-1, consistent with the SAR for Project 2007-17, and understands this to be consistent with the position of FERC staff.		
Dynegy Inc.	No	We agree with all proposed intervals in Tables 1a, 1b, and 1c except the 3 calendar month interval for Associated Communication Systems in Table 1a. We suggest using a 1 year interval because all other elements of the Protection System are being verified a minimum of every 3 years. Therefore, we believe annual verification of Associated Communication Systems is sufficient.
Response: Thank you for your comments. The SDT believes that the 3-month interval is proper for unmonitored communications systems.		
Pacific Northwest Small Public Power Utility Comment Group	No	We agree with most of the changes from the last draft. However, the phrase “Verify Battery cell-to-cell connection resistance” has entered the table where it did not exist before. On some types of stationary battery units, this internal connection is inaccessible. On other types the connections are accessible, but there is no way to repair them based on a bad reading. And bad cell-to-cell connections within units will be detected by the other required

Organization	Yes or No	Question 1 Comment
		tests. This requirement will cause entities to scrap perfectly good batteries just so this test can be performed, with no corresponding increase in bulk electric system reliability while taking an unnecessary risk to personnel and the environment. And because buying battery units composed of multiple cells allows space saving designs, entities may be forced to buy smaller capacity batteries to fit existing spaces. This may end up having a negative effect on reliability. Suggest substituting “unit-to-unit” wherever “cell-to-cell” is used in the table now.
Response: Thank you for your comments. The Tables have been rearranged and considerably revised to improve clarity. Please see new Table 1-4. This element of the table has been modified to state, “Battery internal cell-to-cell or unit-to-unit connection resistance (where available to measure)” to address this comment.		
PNGC Power	No	We agree with most of the changes from the last draft. However, the phrase “Verify Battery cell-to-cell connection resistance” has entered the table where it did not exist before. On some types of stationary battery units, this internal connection is inaccessible. On other types the connections are accessible, but there is no way to repair them based on a bad reading. And bad cell-to-cell connections within units will be detected by the other required tests. This requirement will cause entities to scrap perfectly good batteries just so this test can be performed, with no corresponding increase in bulk electric system reliability while taking an unnecessary risk to personnel and the environment. And because buying battery units composed of multiple cells allows space saving designs, entities may be forced to buy smaller capacity batteries to fit existing spaces. This may end up having a negative effect on reliability. Suggest substituting “unit-to-unit” wherever “cell-to-cell” is used in the table now.
Response: Thank you for your comments. The Tables have been rearranged and considerably revised to improve clarity. Please see new Table 1-4. This element of the table has been modified to state, “Battery internal cell-to-cell or unit-to-unit connection resistance (where available to measure)” to address this comment.		
FirstEnergy	No	We support most of the maintenance activities detailed in the Tables, but question the

Organization	Yes or No	Question 1 Comment
		verification of battery cell-to-cell resistance. On some types of battery units, this internal connection is inaccessible. We suggest substituting "unit-to-unit" in place of "cell-to-cell".
Response: Thank you for your comments. The Tables have been rearranged and considerably revised to improve clarity. Please see new Table 1-4. This element of the table has been modified to state, "Battery internal cell-to-cell or unit-to-unit connection resistance (where available to measure)" to address this comment.		
Florida Municipal Power Agency	No	1. Will the Standard Introduce Technical Feasibility Exceptions to PRC Standards? A large proportion of the batteries (as high as 50% as reported by some SMEs) are not able to accommodate all of the tests prescribed in the draft standard. The phrase "Verify Battery cell-to-cell connection resistance" has entered the table where it did not exist before. On some types of stationary battery units, this internal connection is inaccessible. On other types the connections are accessible, but there is no way to repair them based on a bad reading. And bad cell-to-cell connections within units will be detected by the other required tests. This requirement will cause entities to scrap perfectly good batteries just so this test can be performed, with no corresponding increase in bulk electric system reliability while taking an unnecessary risk to personnel and the environment. And because buying battery units composed of multiple cells allows space saving designs, entities may be forced to buy smaller capacity batteries to fit existing spaces. This may end up having a negative effect on reliability. Suggest substituting "unit-to-unit" wherever "cell-to-cell" is used in the table now. 2. The Standard Reaches Beyond the Statutory Scope of the Reliability Standards As written, the standard requires testing of batteries, DC control circuits, etc., of distribution level protection components associated with UFLS and UVLS. UFLS and UVLS are different than protection systems used to clear a fault from the BES. An uncleared fault on the BES can have an Adverse Reliability Impact and hence; the focus on making sure the fault is cleared is important and appropriate. However, a UFLs or UVLS event happens after the fault is cleared and is an inexact science of trying to automatically restore supply and demand balance (UFLS) or restore voltages (UVLS) to acceptable

Organization	Yes or No	Question 1 Comment
		levels. If a few UFLS or UVLS relays fail to operate out of potentially thousands of relays with the same function, there is no significant impact to the function of UFLS or UVLS. Hence, there is no corresponding need to focus on every little aspect of the UFLS or UVLS systems. Therefore, the only component of UFLS or UVLS that ought to be focused on in the new PRF-005 standard is the UFLS or UVLS relay itself and not distribution class equipment such as batteries, DC control circuitry, etc., and these latter ought to be removed from the standard. In addition, most distribution circuit are radial without substation arrangements that would allow functional testing without putting customers out of service while the testing was underway, or at least without momentary outages while customers were switched from one circuit to another. Therefore, as written, we would be sacrificing customer service for a negligible impact on BES reliability.
Response: Thank you for your comments. 1. The Tables have been rearranged and considerably revised to improve clarity. Please see new Table 1-4. This element of the table has been modified to state, “Battery internal cell-to-cell or unit-to-unit connection resistance (where available to measure)” to address this comment. **2.** The Standard addresses UFLS and UVLS to the degree that they are installed per NERC Standards, even though entities may choose to install them on distribution systems.		
NERC Staff	Yes	
PacifiCorp	Yes	
WECC	Yes	Compliance agrees with the changes as they add clarity though the Tables do not define what is actually required to demonstrate compliance without reading the Supplementary Reference and the FAQs.
Response: Thank you for your comments. The Measures do provide discussion of what is required to demonstrate compliance.		

Organization	Yes or No	Question 1 Comment
The United Illuminating Company	Yes	In general yes. There are concerns with verifying cell-to-cell resistance in Batteries. On some battery sets this is not possible to do.
Response: Thank you for your comments. This element of the table has been modified to state, "Battery internal cell-to-cell or unit-to-unit connection resistance (where available to measure)" to address this comment.		
South Carolina Electric and Gas	Yes	Please provide clarity on why Table 1b for "Station dc supply" has a double entry that appears to be contradictory. The table provides monitoring attributes for a maximum maintenance interval of 6 calendar years and the next row says to refer to level 1 maintenance activities.
Response: Thank you for your comments. The Tables have been rearranged and considerably revised to improve clarity. Please see new Table 1-4.		
ReliabilityFirst Corp.	Yes	1. The SDT has made significant and worthwhile changes to these tables. However, these tables still seem overly complex and should be simplified. One possibility would be to eliminate Table 1c and use Table 1b for those components that meet certain monitoring attributes. 2. There are some errors in Table 1a in rows 5 and 6. In row 5 in the component column the word "contact" is missing. In the same row in the third column, there is an extra period. In row 6 in the third column, "circuit" should be "circuits" as in the other rows. 3. The maintenance intervals seem to give preference to solid-state outputs but there is no evidence given that these are truly more reliable than an electromechanical trip at least not sufficient to double the maintenance interval.
Response: Thank you for your comments. 1. The Tables have been rearranged and considerably revised to improve clarity. Please see new Tables 1-1 through 1-5.		

Organization	Yes or No	Question 1 Comment
2. The Tables have been rearranged and considerably revised to improve clarity. Please see new Tables 1-1 through 1-5.		
3. The Tables have been rearranged and considerably revised to improve clarity. Please see new Tables 1-1.		

2. **The SDT has included VRFs and Time Horizons with this posting. Do you agree with the assignments that have been made? If not, please provide specific suggestions for improvement.**

Summary Consideration: Many commenters disagreed with various VRFs as specified in the draft Standard. The SDT has reconsidered the VRFs in accordance with the guidance provided by NERC and FERC, and the Standard has been modified to assign the VRFs as R1 – Medium, R2 – Medium, R3 – Medium, and R4 – High. Some comments were offered regarding Time Horizons, resulting in modification of the Time Horizons for both R3 and R4 from Long-Term Planning to Operations Planning.

Organization	Yes or No	Question 2 Comment
PPL Supply		No comment.
Xcel Energy		No comments
SERC Protection and Control Sub-committee (PCS)		The SERC PCS expresses no opinion on this question.
San Diego Gas & Electric	No	
The Detroit Edison Company	No	
Black Hills Power	No	
The United Illuminating Company	No	The VRF for R1 should be Low. It is administrative to create an inventory list. If R1 failed to be executed but the other requirements wee executed fully then the BES would be

Organization	Yes or No	Question 2 Comment
		properly secured. Compare this against the scenario of performing R1 but failing to perform the other tasks; in which case the BES is at risk. UI recognizes that the SDT considers the inventory as the foundation of the PSMP but it is not the element of the PSMP that provides for the level of reliability sought. R1 should be VRF Low and R2 thru R4 VRF is Medium. UI agrees with the Time Horizon.
Response: Thank you for your comments. The SDT has reconsidered the VRFs in accordance with the guidance provided by NERC and FERC, and the Standard has been modified to assign the VRFs as R1 – Medium, R2 – Medium, R3 – Medium, and R4 – High.		
JEA	No	1. What role with the Supplementary Reference and FAQ play with reference to the proposed standard? We have a concern that the standard will stand-alone and not include the interpretations, examples and explanations that are needed to properly apply these values in a compliance environment. There needs to be a method to include the FAQ and Supplementary Reference. 2. The method will also need to allow for future modifications as the standard is revised, etc.
Response: Thank you for your comments. 1. The Supplementary Reference and FAQ documents provide supporting discussion, but are not part of the Standard. The SDT intends that these be posted as reference documents, accompanying the Standard. **2.** The SDT intends that these documents be updated as the Standard is revised, such that they continue to be relevant to the application of the Standard.		
FirstEnergy	No	Although we agree that Requirement 1 is important because it establishes a sound PSMP, a HIGH VRF assignment is not appropriate and it should be changed to LOWER. By definition, a requirement with a LOWER VRF is administrative in nature, and documentation of a program is administrative. Assigning a LOWER VRF to R1 is more logical since R4, which is the requirement to implement the PSMP, is assigned a MEDIUM VRF because, if violated, it could directly affect the electrical state or the capability of the bulk electric

Organization	Yes or No	Question 2 Comment
		system. Additionally, revising the VRF to LOWER would provide a consistent assignment to a VRF on a similar requirement in the proposed FAC-003-2 standard.
Response: Thank you for your comments. The SDT has reconsidered the VRFs in accordance with the guidance provided by NERC and FERC, and the Standard has been modified to assign the VRFs as R1 – Medium, R2 – Medium, R3 – Medium, and R4 – High. For a VRF to be classified as "Lower" it must be administrative, and none of the requirements in this standard are 'administrative'.		
Pepco Holdings, Inc. - Affiliates	No	An explanation is needed to justify why the VRF for R1 of the PSMP is High whereas the implementing and following of the PSMP is Medium, R2, R3 & R4.
Response: Thank you for your comments. The SDT has reconsidered the VRFs in accordance with the guidance provided by NERC and FERC, and the Standard has been modified to assign the VRFs as R1 – Medium, R2 – Medium, R3 – Medium, and R4 – High.		
American Transmission Company	No	ATC disagrees with the VRFs as specified in the standard. R1 VRF would more likely be classified as "medium" and R2 through R4 should be classified as a "High" VRF. ATC is O.K. with the Time Horizons specified.
Response: Thank you for your comments. The SDT has reconsidered the VRFs in accordance with the guidance provided by NERC and FERC, and the Standard has been modified to assign the VRFs as R1 – Medium, R2 – Medium, R3 – Medium, and R4 – High.		
Constellation Power Generation	No	Constellation Power Generation questions why the VRF for R1 is High while all other requirements are Medium. This VRF should be changed to Medium to follow suit with the other requirements.
Response: Thank you for your comments. The SDT has reconsidered the VRFs in accordance with the guidance provided by NERC and FERC, and the Standard has been modified to assign the VRFs as R1 – Medium, R2 – Medium, R3 – Medium, and R4 – High.		
Florida Municipal Power Agency	No	R1, R2 and R3 are administrative in nature and ought to be a Low VRF, not a High or Medium VRF. R4 is doing the actual maintenance and testing and ought to be the highest VRF in the standard. Medium VRF is appropriate for R4.

Organization	Yes or No	Question 2 Comment
Response: Thank you for your comments. The SDT has reconsidered the VRFs in accordance with the guidance provided by NERC and FERC, and the Standard has been modified to assign the VRFs as R1 – Medium, R2 – Medium, R3 – Medium, and R4 – High.		
ReliabilityFirst Corp.	No	R4 is the implementation of a maintenance program which is extremely important. Effective operation of the BES is so dependent on adequate maintenance that requirement R4 warrants a High VRF. It seems that requirement R3 may actually be better categorized as having an Operations Assessment Time Horizon as the entity needs to review events to analyze the adequacy of maintenance periods.
Response: Thank you for your comments. The SDT has reconsidered the VRFs in accordance with the guidance provided by NERC and FERC, and the Standard has been modified to assign the VRFs as R1 – Medium, R2 – Medium, R3 – Medium, and R4 – High. The SDT agrees with the suggestion to change the R3 Time Horizon and has assigned an Operations Planning Time Horizon.		
BGE	No	See comments under 7 regarding the ambiguity of R1.1. A high VRF for some interpretations of R1.1 may not be reasonable. A program may be structured so that sufficient maintenance to ensure reliability is taking place even though a specific component is not identified. Contrasting the high VRF for R1 with the medium VRF for R4 seems backwards.
Response: Thank you for your comments. The SDT has reconsidered the VRFs in accordance with the guidance provided by NERC and FERC, and the Standard has been modified to assign the VRFs as R1 – Medium, R2 – Medium, R3 – Medium, and R4 – High.		
MRO's NERC Standards Review Subcommittee (NSRS)	No	The NSRS disagrees with the VRFs as specified in the standard. R1 VRF would more likely be classified as "medium" and R2 through R4 should be classified as a "High" VRF.
Response: Thank you for your comments. The SDT has reconsidered the VRFs in accordance with the guidance provided by NERC and FERC, and the Standard has been modified to assign the VRFs as R1 – Medium, R2 – Medium, R3 – Medium, and R4 – High.		

Organization	Yes or No	Question 2 Comment
US Bureau of Reclamation	No	The Time Horizons are too narrow for the implementation of the standard as written. The SDT appears to have not accounted for the data analysis associated with performance based systems. The data collection, analysis, and subsequent decisions associated development of a maintenance program and its justification do not occur overnight especially with larger utilities. In addition, this new standard will require complete rewrite of maintenance programs. The internal processes associated with these vary based on the size of the utility. Since this standard is so invasive into the internal decisions concerning maintenance, the standard should allow at least 18 months for entities to rewrite their internal maintenance programs to meet the requirements and 18 months to train the staff and implement the new program.
Response: Thank you for your comments. The SDT has reviewed the time horizons, and feels that R1 and R2 are properly assigned a Long-Term Planning Time Horizon, as the activities to develop a program and to determine the monitoring attributes of components are performed within the related time period. The SDT has assigned an Operations Planning Time Horizon to R3 and R4, as some of the related activities must take place within 1-year intervals.		
Ameren	No	The VRF for R1 should be Medium because the failure to do so is commensurate with the risks of the other requirements. For example, failing to establish a PSMP for some portion of the entity's components could lead to their maintenance not meeting this standard; this is the same is establishing the PSMP and then not performing the maintenance per the standard.
Response: Thank you for your comments. The SDT has reconsidered the VRFs in accordance with the guidance provided by NERC and FERC, and the Standard has been modified to assign the VRFs as R1 – Medium, R2 – Medium, R3 – Medium, and R4 – High.		
Indeck Energy Services	No	The VRF's are highly arbitrary because they treat all registered entities and all protective systems alike. They're not. For example, under-frequency relays for generators protect the equipment needed to restore the system after a blackout. The under-frequency load relays prevent a cascading outage. As discussed at the FERC Technical Conference on Standards Development, the goal of the standards program is to avoid or prevent

Organization	Yes or No	Question 2 Comment
		cascading outages--specifically not loss of load. That would make under-frequency load relays more important to prevent cascading outages.
Response: Thank you for your comments. The SDT has reconsidered the VRFs in accordance with the guidance provided by NERC and FERC, and the Standard has been modified to assign the VRFs as R1 – Medium, R2 – Medium, R3 – Medium, and R4 – High. The risk to the system is independent of entity size. VSLs have been modified where necessary to make them independent of size of entity.		
Springfield Utility Board	No	1. Time horizons for implementation seem adequate and SUB appreciates the attention to putting together a reasonable but assertive implementation plan. 2. The Violation Risk Factors are problematic. With all due respect, it seems that NERC still operates in a "BIG UTILITY" mind set. There are "PROTECTION SYSTEMS" and there are "Protection Systems" - some Protection Systems may significantly impact system reliability and others may not. This not promote reliability in that if an entity was thinking about installing a minor system or installing an improvement that enhances reliability (but is not required) that it might back away because of the risk associated with somehow being out of compliance. Reliability runs the risk of being diminished through the standards approach. SUB suggests stepping back and putting more granularity on VRFs and there needs to be more perspective on the purpose of the device when arriving at a risk factor. Perhaps a voltage threshold could be attached to the VRFs. For example language could be added to say "For Elements at 200kV and above, or for Critical Assets, the risk factor is higher" and "For Elements operating at 100kV and above, the risk factor is medium" and "For Elements below 100kV, the risk factor is lower" In SUB's view, a discussion on VRF's needs to coupled with Violation Severity Levels. SUB discusses VRF's later in this comment form. SUB would be supportive of a Medium VRF designation if there were a more balanced VLF structure (please refer to the comments of VLFs)
Response: Thank you for your comments. The SDT has reconsidered the VRFs in accordance with the guidance provided by NERC and FERC, and the Standard has been modified to assign the VRFs as R1 – Medium, R2 – Medium, R3 – Medium, and R4 – High.		

Organization	Yes or No	Question 2 Comment
According to the current Reliability Standards Development Procedure, each Requirement is assigned one (and only one) VRF.		
Manitoba Hydro	No	Time horizons to change from present 6 months to 3 months maintenance time intervals within proposed implementation time period is not realistic.
Response: Thank you for your comments. The options for Time Horizon are Long-Term Planning, Operations Planning, Same-Day Operations, Real-Time Operations, and Operations Assessment. The SDT has reviewed the Time Horizons, and feels that R1 and R2 are properly assigned a Long-Term Planning time horizon, as the activities to develop a program and to determine the monitoring attributes of components is performed within the related time period. The SDT has assigned an Operations Planning Time Horizon to R3 and R4, as some of the related activities must take place within 1-year intervals.		
American Electric Power	Yes	
Arizona Public Service Company	Yes	
Bonneville Power Administration	Yes	
Consumers Energy Company	Yes	
Duke Energy	Yes	
Dynegy Inc.	Yes	
Entergy Services	Yes	
Exelon	Yes	

Organization	Yes or No	Question 2 Comment
Great River Energy	Yes	
Hydro One Networks	Yes	
Long Island Power Authority	Yes	
MEAG Power	Yes	
MidAmerican Energy Company	Yes	
Northeast Power Coordinating Council	Yes	
Northeast Utilities	Yes	
Pacific Northwest Small Public Power Utility Comment Group	Yes	
PNGC Power	Yes	
Progress Energy Carolinas	Yes	
Public Service Enterprise Group ("PSEG Companies")	Yes	

Organization	Yes or No	Question 2 Comment
Santee Cooper	Yes	
South Carolina Electric and Gas	Yes	
Southern Company Transmission	Yes	
Tennessee Valley Authority	Yes	
We Energies	Yes	
Western Area Power Administration	Yes	
Y-W Electric Association, Inc.	Yes	
PacifiCorp	Yes	Agree with the exception that the time horizon for implementation needs to recognize that documentation for maintenance tasks performed prior to this standard may not match current requirements and there should be no penalty for this.
Response: Thank you for your comments. The Implementation Plan needs to address the concerns expressed.		
Nebraska Public Power District	Yes	Please provide an example of how the compliance percentage will be calculated for the implementation plan.
Response: Thank you for your comments. The SDT does not understand how this comment relates to the VRFs or to the Time Horizons.		

3. The SDT has included Measures and Data Retention with this posting. Do you agree with the assignments that have been made? If not, please provide specific suggestions for improvement.

Summary Consideration: Many commenters expressed concern about the data retention requirements for two full maintenance intervals, and the SDT responded that this is consistent with today's expectations of many Compliance Monitors. Other commenters were concerned about data retention over the transition from PRC-005-1 to two full maintenance intervals for PRC-005-2, and the SDT offered advice that, until two maintenance cycles have been experienced under PRC-005-2, the program and associated documentation for PRC-005-1 will still be relevant.

Comments were offered that "on-site" audits as expressed in the Data Retention Section (item 1.3 under Compliance) are not relevant for small entities which are not audited on-site; the SDT agrees and changed the term to "scheduled" audits.

Several commenters offered suggestions relative to the Measures, resulting in changes to all four Measures. The SDT removed the detailed Protection System definition from Measure M1, inserted "Distribution Provider" in Measure M2, and made changes to consistently use "shall" rather than "will" or "should" throughout all the Measures.

Organization	Yes or No	Question 3 Comment
WECC		1. Compliance agrees with the measures. 2. Compliance recommends making the Supplementary Reference part of the standard and that it be referenced appropriately in Table 1a, 1b, 1c and Attachment A. 3. Compliance does not agree with the Data Retention as provided in the draft. In order for an entity to demonstrate that they have maintained system protection elements within their defined intervals retention of documentation will be required for many years.

Organization	Yes or No	Question 3 Comment
		This is in order to establish bookends for the maintenance interval. Maintenance intervals commonly span 5 years or more. Entities should be required to retain data for the entire period of the maintenance interval. Data Retention should be changed to: The Transmission Owner and any Distribution Provider that owns a transmission Protection System and each Generation Owner that owns a generation Protection System, shall retain evidence of the implementation of its Protection System maintenance and testing program for a minimum of the duration of one maintenance interval as defined in the maintenance and testing program.
Response: Thank you for your comments. 1. Thank you. 2. This document provides supporting discussion, but is not part of the Standard. The SDT intends that it be posted as a Reference Document, accompanying the Standard. As established in SDT Guidelines, the Standard is to be a terse statement of requirements, etc, and is not to include explanatory information like that included in the Supplementary Reference Document. **3.** The SDT believes that the modification suggested in the comment is not sufficient to demonstrate compliance. In order that a Compliance Monitor can be assured of compliance, the SDT believes that the Compliance Monitor will need the data of the most recent performance of the maintenance, as well as the data of the preceding one. The SDT has specified the data retention in the posted Standard to establish this level of documentation.		
Xcel Energy		No comments
San Diego Gas & Electric	No	
The Detroit Edison Company	No	
Ameren	No	1) M2 incorrectly excludes Distribution Provider. 2) For those components with numerous cycles between on-site audits, retaining and

Organization	Yes or No	Question 3 Comment
		providing evidence of the two most recent distinct maintenance performances and the date of the others should be sufficient. If an entity misses a required maintenance, that results in a self report. We are subject to spot audits and inquiries at any time between on-site audits as well. 3) For those components with cycles exceeding on-site audit interval, retaining and providing evidence of the most recent distinct maintenance performance and the date of the preceding one should be sufficient. Auditors will have reviewed the preceding maintenance record. Retaining these additional records consumes resources with no reliability gain. 4) FAQ II 2B final sentence states that documentation for replaced equipment must be retained to prove the interval of its maintenance. We oppose this because: the replaced equipment is gone and has no impact on BES reliability; and such retention clutters the data base and could cause confusion. For example, it could result in saving lead acid battery load test data beyond the life of its replacement.
Response: Thank you for your comments. 1. Distribution Provider has been added to Measure M2. 2. The SDT understands that Compliance Monitors will usually wish to review data to review program performance back to the preceding on-site audit. **3.** The SDT believes that the Compliance Monitor will need the data of the most recent performance of the maintenance, as well as the data of the preceding one. The SDT has specified the data retention in the posted Standard to establish this level of documentation. The SDT understands that Compliance Monitors are currenlty requesting data on retired components to validate that entities have been in compliance since the last audit (or currently, since the beginning of mandatory compliance), and believes that this suggestion in the FAQ is appropriate.		
Northeast Power Coordinating Council	No	1. Clarification is needed for “on-site audit” - does it include audits by any of the following - NPCC/NERC/FERC. Several small entities do not have on-site audits and participate in

Organization	Yes or No	Question 3 Comment
		off-site audits. Hence, suggest deleting "on-site" from the requirement. 2. Further clarification is required to the Data Retention section to coordinate with the statement in FAQ (Section IV.d p. 22 redline). Suggest the following revised Data Retention requirement consistent with the statement and example given in FAQ:"The Transmission Owner, Generator Owner, and Distribution Provider shall each retain at least two maintenance test records or statistical data to demonstrate compliance with test interval required for each distinct maintenance activity for the Protection System components. The Compliance Enforcement Authority shall keep the last periodic audit report and all requested and submitted subsequent compliance records."
Response: Thank you for your comments. 1. We have modified "on-site" to "scheduled" to address this comment. **2.** The SDT was unable to locate the discussion from the comment within the FAQ.		
Constellation Power Generation	No	Constellation Power Generation does not agree with the proposed data retention section. Retaining and providing evidence of the two most recent performances of each distinct maintenance activity should be sufficient. For entities that have not been audited since June of 2007, having to retain evidence from that date to the date of an audit could contain numerous cycles, which is cumbersome and does not improve the reliability of the BES.
Response: Thank you for your comments. For shorter-interval activities (such as those with quarterly intervals), the SDT understands that Compliance Monitors are currently requesting data to validate that entities have been in compliance since the last audit (or currently, since the beginning of mandatory compliance) or for the duration specified in a standard.		
JEA	No	Data retention becomes a complex issue for maintenance intervals of 12 years where the last two test intervals are required to be kept, i.e. 24 years. It would seem much more reasonable to set a limit of two test intervals or the last regional audit, not having to keep some 24 years of documentation with maintenance systems changing and archival records

Organization	Yes or No	Question 3 Comment
		somewhat problematic to keep.
Response: Thank you for your comments. In order that a Compliance Monitor can be assured of compliance, the SDT believes that the Compliance Monitor will need the data of the most recent performance of the maintenance, as well as the data of the preceding one. The SDT has specified the data retention in the posted standard to establish this level of documentation.		
Public Service Enterprise Group ("PSEG Companies")	No	Data retention for battery capacity test should be most recent performance, not last 2. The other maintenance activities documentation with one iteration of capacity test is sufficient documentation
Response: Thank you for your comments. In order that a Compliance Monitor can be assured of compliance, the SDT believes that the Compliance Monitor will need the data of the most recent performance of the maintenance, as well as the data of the preceding one, as well as data to validate that entities have been in compliance since the last audit (or currently, since the beginning of mandatory compliance). The SDT has specified the data retention in the posted Standard to establish this level of documentation.		
PacifiCorp	No	Data retention requirements need to be modified. The need to maintain records of two previous tasks is excessive, one should be adequate. Per the two previous task requirements an entity may need to maintain records for 35 years.
Response: Thank you for your comments. In order that a Compliance Monitor can be assured of compliance, the SDT believes that the Compliance Monitor will need the data of the most recent performance of the maintenance, as well as the data of the preceding one, as well as data to validate that entities have been in compliance since the last audit (or currently, since the beginning of mandatory compliance). The SDT has specified the data retention in the posted Standard to establish this level of documentation.		
Progress Energy Carolinas	No	M2 incorrectly excludes Distribution Provider.
Response: Thank you for your comments. Measure M2 has been modified to add “Distribution Provider.”		
Duke Energy	No	M4 states that entities shall have evidence such as maintenance records or maintenance summaries (including dates that the components were maintained). We would like to see

Organization	Yes or No	Question 3 Comment
		M4 revised/expanded to explicitly include the FAQ Section IV 1.B information which states that forms of evidence that are acceptable include, but are not limited to: o Process documents or plans o Data (such as relay settings sheets, photos, SCADA, and test records) o Database screen shots that demonstrate compliance information o Diagrams, engineering prints, schematics, maintenance and testing records, etc. o Logs (operator, substation, and other types of log) o Inspection forms o U.S. or Canadian mail, memos, or email proving the required information was exchanged, coordinated, submitted or received o Database lists and records o Check-off forms (paper or electronic) o Any record that demonstrates that the maintenance activity was known and accounted for.
Response: Thank you for your comments. The Standard Development Procedure requires that Measures provide some examples of evidence, but does not require an exhaustive list. The SDT did add “check-off lists” and “inspection records.”		
Indeck Energy Services	No	Measure 1 is complete overkill for a small generating facility. The maintenance program is to inspect and test the equipment within the intervals. A qualified contractor applies industry standard methods to maintain the equipment. Trying to have each entity define the maintenance program down to the component level does not improve reliability.
Response: Thank you for your comments. A definition of “Component” has been added to the draft PRC-005-2 Standard to help explain how “component” can be characterized.		

Organization	Yes or No	Question 3 Comment
PPL Supply	No	1. Measurers M1 - requires having a maintenance program that addresses control circuitry associated with protective functions from the station dc supply through the trip coil(s) of the circuit breakers. Some generators do not own this equipment to the circuit breaker or other interrupting devices. The requirement should be to maintain and test the equipment owned by the generator. 2. Data Retention 1.3 references on-site audits. Entities registered as GO and GOP are not audited on-site.
Response: Thank you for your comments. 1. The SDT believes that "its Protection Systems" in Requirement R1 is synonymous with "Protection Systems that it owns" and declines to modify the Standard to address this comment. **2.** We have modified "on-site" to "scheduled" to address this comment.		
Arizona Public Service Company	No	The change to the Protection System definition and establishing a PSMP with prescriptive maintenance activities relative to the voltage and current sensing devices has created a situation where data from original or prior verification not being available or not at the interval to meet the data retention requirement. Although, methods of determining the integrity of the voltage and current inputs into the relays were used to ensure reliability of the devices meets the utilities requirements, they may not meet the interval requirement and would then be considered a violation due to changes in the standard. Recommend a single exemption of the two recent most recent performances of maintenance activities to the most recent performance of maintenance activity in the first maintenance interval for this component due to the long maintenance interval, the changes in the standard definitions and the prescriptive maintenance activities.
Response: Thank you for your comments. The SDT believes that Compliance Monitors will assess compliance for activities performed before the effective date of this Standard using the program that you had in place previously.		

Organization	Yes or No	Question 3 Comment
American Electric Power	No	1. The measure includes the entire definition of "Protection System". Remove the definition from the measure and let the definition stand alone in the NERC glossary. 2. 1.3 Data Retention This calls for past 2 distinct maintenance records to be kept. Since UFLS interval can be 12 years, this would mean that we would need to keep records for 24 years. This is not realistic and consideration should be given to choosing a reasonable retention threshold.
Response: Thank you for your comments. 1. Measure M2 has been modified as suggested. **2.** In order that a Compliance Monitor can be assured of compliance, the SDT believes that the Compliance Monitor will need the data of the most recent performance of the maintenance, as well as the data of the preceding one, as well as data to validate that entities have been in compliance since the last audit (or currently, since the beginning of mandatory compliance). The SDT has specified the data retention in the posted Standard to establish this level of documentation.		
Springfield Utility Board	No	The measures do not seem unreasonable. However the data retention states that documentation must exist for the two most recent performances of each maintenance activity. Stepping back, there is an implementation schedule that is designed to bring all devices into compliance with ONE maintenance or test within (SUB's understanding is) 6 years. There may not be documentation for more than one activity. Further, new or replacement components won't have more than one activity for a number of years. The data retention schedule, left unchanged, will promote non-compliance because it is impossible to have two records when only one may possibly exist. Rather than promote a culture of compliance, the standard promotes a culture of non-compliance by creating an standard that cannot be met. The FAQ addresses this issue, but the Data Retention language seems to be less clear. SUB suggests that the Data Retention language be clear that new components that do not replace existing components may have only one record for maintenance if only one maintenance of the component could possibly exist. SUB suggests that the Data Retention language also be clear that for new components that

Organization	Yes or No	Question 3 Comment
		replace existing components, that the Data Retention requirement reflect that the entity needs to retain the last test for the pre-existing component and the test for the new component (for a total of two tests).
Response: Thank you for your comments. First of all, the Data Retention presumes a stable Standard that has been in effect. Further, the SDT believes that Compliance Monitors will assess compliance for activities performed before the effective date of this Standard using the program that you had in place previously. Therefore, the documentation for your program under PRC-005-1 (whatever it may have been) will serve as your "second interval" documentation until supplanted by new PRC-005-2 records.		
US Bureau of Reclamation	No	The measures M2, M3, and M4 are redundant to measure M1. Either eliminate M1 or M2 through M4. The entity must provide documentation of its maintenance program in M1 irrespective of the type used. As previously mentioned there is not reliability based justification for the documentation required. The Entity should be afforded the freedom to make intelligent maintenance choices based on innumerable factors. These choices will be reviewed if a reliability impact is determined to be related to the choices.
Response: Thank you for your comments. The NERC Reliability Standard Development Procedure establishes that each individual requirement will have its own Measure. Additionally, the four Measures are NOT redundant – Measure M1 addresses "having a program," Measure M2 addresses "monitoring attributes to use extended intervals in the Tables," Measure M3 addresses "criteria for a performance-based program," and Measure M4 addresses "implementation of the program."		
American Transmission Company	No	The NERC standard assigns a retention period for the two most recent performances of maintenance activity which implies two intervals of documentation be maintained. ATC does not agree that requiring all data for two full cycles is warranted. The volume and length of data retention is unreasonable. ATC recommends that the entity retain the last test date with the associated data, plus the prior cycle test date only without retaining the test data. ATC agrees with assignment of the measures.
Response: Thank you for your comments. In order that a Compliance Monitor can be assured of compliance, the SDT believes that the Compliance Monitor will need the data of the most recent performance of the maintenance, as well as the data of the preceding		

Organization	Yes or No	Question 3 Comment
one. The SDT has specified the data retention in the posted Standard to establish this level of documentation.		
MRO's NERC Standards Review Subcommittee (NSRS)	No	The NERC standard assigns a retention period for the two most recent performances of maintenance activity which implies two intervals of documentation being maintained. The NSRS does not agree that requiring all data for two full cycles is warranted. The volume and length of data retention is unreasonable. The NSRS recommends that the entity retain the last test date with the associated data, plus the prior cycle test date only without retaining the test data.
Response: Thank you for your comments. In order that a Compliance Monitor can be assured of compliance, the SDT believes that the Compliance Monitor will need the data of the most recent performance of the maintenance, as well as the data of the preceding one. The SDT has specified the data retention in the posted Standard to establish this level of documentation.		
Pepco Holdings, Inc. - Affiliates	No	The present wording regarding data retention states - The Transmission Owner, Generator Owner, and Distribution Provider shall each retain documentation of the two most recent performances of each distinct maintenance activity for the Protection System components, or to the previous on-site audit date, whichever is longer. This wording was changed by the SDT following comments received from Draft 1. However, the present wording is somewhat confusing. It is assumed that the intent of the SDT was to require documentation be retained for the two most recent performances of each distinct maintenance activity, regardless of when they occurred (i.e., whether prior to, or since the last audit), since the phrase whichever is longer was used. In addition, for those activities requiring short maintenance intervals (such as battery inspections), records must be kept for all performances (not just the last two) that have taken place since the last on-site audit. For example: Assume a PSMP with a 6 year interval for relay maintenance and 3 month interval for battery inspections. At a particular station assume the batteries have been inspected every 3 months; the relays were last inspected 5 years ago, and before that 11 years ago. The last audit was 2 years ago. Records from each 3 month battery inspection going back to the last audit needs to be retained. Also, both relay maintenance records from 5 and 11 years ago needs to be retained, despite the fact that this interval should

Organization	Yes or No	Question 3 Comment
		have been reviewed during the last audit. Documentation from the 11 year ago activity can be discarded when the relays are next maintained. Is this what the SDT intended? If so, the requirement should be re-worded to better explain the intent. Also, examples should be included in either the FAQ or Supplemental Reference to demonstrate what is expected.
Response: Thank you for your comments. You understand the data retention correctly as intended by the SDT and specified in the draft standard. In order that a Compliance Monitor can be assured of compliance, the SDT believes that the Compliance Monitor will need the data of the most recent performance of the maintenance, as well as the data of the preceding one, as well as data to validate that entities have been in compliance since the last audit (or currently, since the beginning of mandatory compliance). The SDT has specified the data retention in the posted Standard to establish this level of documentation. .		
We Energies	No	The requirement to retain data for the two most recent maintenance cycles is excessive. The required data should be limited to the complete data for the most recent cycle, and only the test date for the previous cycle.
Response: Thank you for your comments. In order that a Compliance Monitor can be assured of compliance, the SDT believes that the Compliance Monitor will need the data of the most recent performance of the maintenance, as well as the data of the preceding one. The SDT has specified the data retention in the posted Standard to establish this level of documentation.		
Long Island Power Authority	No	1. Two most recent performances of each distinct maintenance activity for the Protection System components will require data retention for an extended period of time. For example, in certain cases, battery maintenance is on a 12 year cycle which suggests that records need to be retained for 24 years. LIPA suggests retaining data for the most recent maintenance activity. 2. LIPA seeks clarification on “on-site audit” - does it include audits by any of the following - NPCC/NERC/FERC. Also, several small entities do not have on-site audits and participate in off-site audits. Hence, LIPA suggests deleting “on-site” from the requirement. In addition further clarification is required to the Data Retention section to

Organization	Yes or No	Question 3 Comment
		coordinate with the statement in FAQ (Section IV.d p. 22 redline).
Response: Thank you for your comments. **1.** In order that a Compliance Monitor can be assured of compliance, the SDT believes that the Compliance Monitor will need the data of the most recent performance of the maintenance, as well as the data of the preceding one; thus, records for maintenance which is performed every 12 years will need to be retained for 24 years.. The SDT has specified the data retention in the posted Standard to establish this level of documentation. Audits may be by any of the entities listed. The term "on-site" has been replaced by "scheduled" to address your concern.		
Northeast Utilities	No	Two most recent performances of each distinct maintenance activity for the Protection System components will require data retention for an extended period of time. From the FAQ, it is understood that "the intent is not to have three test result providing two time intervals, but rather have two test results proving the last interval". However two intervals still results in an extended period of time. For example, for a twelve year interval, data would need to be retained for ~24 years. During that period of time a number of on-site audits would have been completed - it is not clear why the requirement is the longer of the two most recent performances or to the previous on site audit date.
Response: Thank you for your comments. In order that a Compliance Monitor can be assured of compliance, the SDT believes that the Compliance Monitor will need the data of the most recent performance of the maintenance, as well as the data of the preceding one. The SDT has specified the data retention in the posted Standard to establish this level of documentation.		
MidAmerican Energy Company	No	Verification of compliance with the maximum time intervals for testing only needs to include retention of the documentation of the two most recent maintenance activities. The phrase "or to the previous on-site audit (whichever is longer)" should be deleted.
Response: Thank you for your comments. In order that a Compliance Monitor can be assured of compliance, the SDT believes that the Compliance Monitor will need the data of the most recent performance of the maintenance, as well as the data of the preceding one, as well as data to validate that entities have been in compliance since the last audit (or currently, since the beginning of mandatory		

Organization	Yes or No	Question 3 Comment
compliance). The SDT has specified the data retention in the posted Standard to establish this level of documentation.		
BGE	Yes	
Black Hills Power	Yes	
Bonneville Power Administration	Yes	
Consumers Energy Company	Yes	
Dynegy Inc.	Yes	
Entergy Services	Yes	
Exelon	Yes	
Great River Energy	Yes	
Hydro One Networks	Yes	
MEAG Power	Yes	
Pacific Northwest Small Public Power Utility Comment Group	Yes	
PNGC Power	Yes	

Organization	Yes or No	Question 3 Comment
ReliabilityFirst Corp.	Yes	
Southern Company Transmission	Yes	
The United Illuminating Company	Yes	
Western Area Power Administration	Yes	
Y-W Electric Association, Inc.	Yes	
South Carolina Electric and Gas	Yes	(Note that Section C.M2 leaves off "Distribution Provider" but references Requirement R2 at the end of the Section. "R2 applies to the Distribution Provider.")
Response: Thank you for your comments. Measure M2 has been modified to add “Distribution Provider.”.		
Nebraska Public Power District	Yes	Additional guidance on what is acceptable evidence is always good.
Response: Thank you for your comments. In addition to the lists within the Measures, the FAQ (IV.1.B) and Section 15.7 of the Supplementary Reference Document provide additional guidance about acceptable evidence.		
Florida Municipal Power Agency	Yes	M1 could be shortened to just a program in accordance with R1, rather than repeat the entire requirement
Response: Thanks you for your comments. The restatement of the definition has been removed from Measure M1, but the Reliability		

Organization	Yes or No	Question 3 Comment
Standards Development Procedure specifies that Measures contain levels of detail similar to Measure M1 as posted.		
NERC Staff	Yes	Make sure that the use of verbs like “shall,” “should,” and “will” is consistent across Requirements and Measures. In these four measures, all three verbs are used, and they should be made uniform to avoid misinterpretation.
Response: Thank you for your comments. The Measures have been modified to consistently use “shall.”		
Manitoba Hydro	Yes	No issues or concerns at present
Response: Thank you.		
SERC Protection and Control Sub-committee (PCS)	Yes	The SERC PCS expresses no comments on this question.
Response: Thank you.		
FirstEnergy	Yes	We agree with the Measures but suggest some improvements: 1. In Measures M2 and M3, the term "should" must be changed to "shall" 2. In Measure M2, the Distribution Provider entity is missing
Response: Thank you for your comments. 1. Measure M2 and Measure M3 have been modified as suggested. **2.** Distribution Provider has been added to Measure M2.		
Santee Cooper	Yes	We are concerned with the long-term implementation of the data retention requirements for activities with long maximum intervals. For example, if you are performing an activity that is required every 12 years, the implementation plan says that you should be 100% compliant

Organization	Yes or No	Question 3 Comment
		in 12 years following regulatory approval. However, assuming that 100% compliant meant that you got through all of your components once, you still would not be able to show the last two test dates. 12 years from now, would you still have to discuss the program you were using prior to 12 years ago for those components to have a complete audit, because of having to address the last 2 test dates?
Response: Thank you for your comments. First of all, the Data Retention presumes a stable Standard that has been in effect. Further, the SDT believes that Compliance Monitors will assess compliance for activities performed before the effective date of this Standard using the program that you had in place previously. Therefore, the documentation for your program under PRC-005-1 (whatever it may have been) will serve as your "second interval" documentation until supplanted by new PRC-005-2 records.		

4. The SDT has included VSLs with this posting. Do you agree with the assignments that have been made? If not, please provide specific suggestions for change.

Summary Consideration: Many commenters were concerned about the basis for the percentage increments for different severities of VSLs; these commenters were referred to the VSL Guidelines which propose a Lower VSL as noncompliant with "5% or less," the Medium VSL as "more than 5% but less than (or equal to) 10%," the High VSL as "more than 10% up to (and including) 15%," and the Severe VSL as "more than 15% noncompliant.".

Similarly, many commenters suggested that binary VSLs be assigned a Lower or High rather than a Severe, and were also referred to the VSL Guidelines which indicate that total noncompliance with a requirement is a Severe VSL. VSLs are not indicators of "importance" or "reliability-related risk" – VSLs are an indication of the degree of noncompliant performance.

The VSL for Requirement R4 was modified to add stepped VSLs relating to resolution of maintenance-correctable issues in response to several comments.

Several commenters suggested that the Lower VSL for R4 start at 1% rather than 5%, which is not in accordance with the VSL Guidelines.

Organization	Yes or No	Question 4 Comment
PPL Supply		No Comment.
Xcel Energy		No comments
San Diego Gas & Electric	No	
The Detroit Edison	No	

Organization	Yes or No	Question 4 Comment
Company		
GDS Associates	No	1. We do agree with the majority of the assignments that have been made, however the standard needs specific guidance so to be clearly evidentiated the components as included in the definition of Protection System. The applicability of the standard does not address the current issues regarding radial + load serving only situation when Protection System not designed to provide protection for the BES. 2. Not sure if the percentages corresponding to the events and activities are appropriately assigned. What were the criteria on which all these percentages are based upon? 3. Requirement R3 Severe VSL note 3 allows smaller segment population than the Lower VSL. How these segment limits were developed?
Response: Thank you for your comments. 1. This is an issue related to your Regional BES definition, not to the VSLs. 2. The VSL Guidelines, developed in accordance with the FERC VSL Order, establish the Lower VSL for stepped VSLs as "5% or less," the Medium VSL as "more than 5% but less than (or equal to) 10%," the High VSL as "more than 10% up to (and including) 15%," and the Severe VSL as "more than 15%." **3.** The segment limits for Requirement R3 and Attachment A were developed according to statistical references to assure that performance-based programs are based on a statistically-significant population. See Section 9 of the Supplementary Reference Document. The Lower VSL addresses "a slightly smaller segment population" than specified; the Severe VSL addresses "a significantly smaller segment population" than specified.		
Ameren	No	1) The Lower VSL for all Requirements should begin above 1% of the components. For example for R4: "Entity has failed to complete scheduled program on 1% to 5% of total Protection System components." PRC-005-2 unrealistically mandates perfection without providing technical justification. A basic premise of engineering is to allow for reasonable tolerances, even Six Sigma allows for defects. Requiring perfection may well harm

Organization	Yes or No	Question 4 Comment
		reliability in that valuable resources will be distracted from other duties. 2) In R1, a "Failure to specify whether a component is being addressed by time-based, condition-based, or performance-based maintenance" by itself is a documentation issue and not an equipment maintenance issue. Suggest this warrants only a lower VSL, especially when one of the required components can only be time based. It is possible that a component that failed to be individually identified per R1.1 was included by entity A's maintenance plan. This documentation issue gets a higher VSL than entity B that identified a component without maintaining it. We suggest the R1 VSL be change to Low, since we believe lack of maintenance to be more severe than documentation issues.
Response: Thank you for your comments. 1. The SDT shares your concerns regarding the Lower VSL portion of the stepped VSLs not providing any tolerance for non-conformance without being non-compliant. However, the VSL Guidelines, which conform to the FERC VSL Order, specify that Lower shall be "5% or less." **2.** The VSL for Requirement R1 addresses various levels of severity for degrees of non-compliance. The VSL Guidelines, developed in accordance with the FERC VSL Order, establish that if only a single VSL is provided, it must be Severe. The reliability-related risk related to noncompliance with this requirement is addressed by the VRF being assigned as Lower.		
Entergy Services	No	1. R4: A "Failure to specify whether a component is being addressed by time-based, condition-based, or performance-based maintenance" by itself is a documentation issue and not an equipment maintenance issue. Suggest this warrants only a lower VSL, especially when one of the required components can only be time based. 2. R4: Suggest a stepped VSL for "Entity has failed to initiate resolution of maintenance-correctable issues". While we understand the importance of addressing a correctable issue, it seems like there should be some allowance for an isolated unintentional failure to address a correctable issue. If possible, consider the potential impact to the system. For example, a failure to address a pilot scheme correctable issue for an entity that only employs pilot schemes for system stability applications should not necessarily have the

Organization	Yes or No	Question 4 Comment
		same VSL consequence as an entity which employs pilot schemes everywhere on their system as a standard practice.
Response: Thank you for your comments. 1. This actually addresses the VSL for Requirement R1, which addresses various levels of severity for degrees of non-compliance. The risk related to this is addressed by the VRF being assigned as Lower. **2.** The VSL for Requirement R4 has been modified to provide stepped VSLs for initiation of resolution of maintenance-correctable issues.		
WECC	No	Compliance does not agree. The R1 VSL allows too much to interpret. What does no more than 5% of the component actually use to define the percentage; it should be specific if it is referring to the weight of each component and how many components are there. For example, Protective Relay is one component of five. In addition the VSL for Lower, Moderate and High states in the first paragraph that the entity included all of the "Types" of components according to the definition, though failed to "Identify the Component". It needs clarity on how it can be included though not specifically identified like the next two bullets. The same concern applies to R2 and R4. Be specific about what is included (or not) to calculate those percentages.
Response: Thank you for your comments. The percentages will depend to a large degree how the entity describes their components. A definition of "Component" has been added to the Standard to provide guidance and help provide consistency.		
Constellation Power Generation	No	Constellation Power Generation does not agree with the proposed data retention section. Retaining and providing evidence of the two most recent performances of each distinct maintenance activity should be sufficient. For entities that have not been audited since June of 2007, having to retain evidence from that date to the date of an audit could contain numerous cycles, which is cumbersome and does not improve the reliability of the BES.
Response: Thank you for your comments. This comment is not relevant to VSLs. In order for a Compliance Monitor to be assured of		

Organization	Yes or No	Question 4 Comment
compliance, the SDT believes that the Compliance Monitor will need the data of the most recent performance of the maintenance, as well as the data of the preceding one, as well as data to validate that entities have been in compliance since the last audit (or currently, since the beginning of mandatory compliance). The SDT has specified the data retention in the posted Standard to establish this level of documentation.		
Northeast Utilities	No	For R1 under Severe VSL - suggest moving the first criteria "The entity's PSMP failed to address one or more of the type of components included in the definition of "Protection System" under High VSL since this criteria cannot have the same VSL level as "Entity has not established a PSMP".
Response: Thank you for your comments. The SDT believes that, if an entity has missed one (of the five) entire component types in their program, they do not have a complete program.		
Florida Municipal Power Agency	No	1. For the VSLs of R1 and R2, we do not understand where the 5%, 10% come from. There are only a few types of components, relays, batteries, current transformers and voltage transformers, DC control circuitry, communication, that's 6 component types by our count, so, missing 1 component type in discussing the type of maintenance program is already a 17% error and Low, Medium and High VSLs are meaningless as currently drafted and every violation would be Severe, was the intention to apply this is a different fashion? 2. Perfection is Not A Realistic Goal R4 allows no mistakes. Even the famous six sigma quality management program allows for defects and failures (i.e., six sigma is six standard deviations, which means that statistically, there are events that fall outside of six standard deviations). PRC-005 has been drafted such that any failure is a violation, e.g., 1 day late on a single relay test of tens of thousands of relays is a violation. That is not in alignment with worldwide accepted quality management practices (and also makes audits very painful because statistical, random sampling should be the mode of audit, not 100% review as is currently being done in many instances). FMPA suggests considering statistically based performance metrics as opposed to an unrealistic performance target that does not allow for any failure ever. Due to the shear volume of

Organization	Yes or No	Question 4 Comment
		relays, with 100% performance required, if the standards remain this way, PRC-005 will likely be in the top ten most violated standards for the forever. In other words, 1-2% of components outside of the program should be allowed without a violation and Low VSL should start at a non-zero number, such as "Entity failed to complete scheduled program for 3-6% of components based on a statistically significant random sampling" or something to that affect. 3. There is a fundamental flaw in thinking about reliability of the BES. We are really not trying to eliminate the risk of a widespread blackout; we are trying to reduce the risk of a widespread blackout. We plan and operate the system to single and credible double contingencies and to finite operating and planning reserves. To eliminate the risk, we would need to plan and operate to an infinite number of contingencies, and have an infinite reserve margin, which is infeasible. Therefore, by definition, there is a finite risk of a widespread blackout that we are trying to reduce, not eliminate, and, by definition, by planning and operating to single and credible double contingencies and finite operating and planning reserves, we are actually defining the level of risk from a statistical basis we are willing to take. With that in mind, it does not make sense to require 100% compliance to avoid a smaller risk (relays) when we are planning to a specified level of risk with more major risk factors (single and credible double contingencies and finite planning and operating reserves).

Response: Thank you for your comments.

1. The VSL Guidelines, developed in accordance with the FERC VSL Order, establish the Lower VSL for stepped VSLs as "5% or less," the Medium VSL as "more than 5% but less than (or equal to) 10%," the High VSL as "more than 10% up to (and including) 15%," and the Severe VSL as "more than 15%." Much of this comment seems to relate to the VSL for Requirement R1; this VSL has been extensively revised, and additional terms have been added to the Definitions section to clarify.
2. The SDT shares your concerns regarding the Lower VSL portion of the stepped VSLs not providing any tolerance for non-conformance without being non-compliant. However, the VSL Guidelines, which conform to the FERC VSL Order, specify that Lower shall be "5% or less." The VRF and VSLs are only a starting point in determining the size of a penalty or sanction – the

Organization	Yes or No	Question 4 Comment
Compliance Enforcement Authority has latitude to consider aggravating factors and mitigating factors in determining whether there should be any penalty, and the size of any penalty. These mitigating and aggravating factors are oultined in the Compliance Monitoring and Enforcement Program. http://www.nerc.com/files/Appendix4C_Uniform_CMEP_10022009.pdf **3.** The SDT believes that Protection Systems that trip (or can trip) the BES should be included. This position is consistent with the currently-approved PRC-005-1, consistent with the SAR for Project 2007-17, and understands this to be consistent with the position of FERC staff. The NERC criteria for VSLs do not currently permit them to allow some level of non-performance without being in violation.		
Santee Cooper	No	In R1, a "Failure to specify whether a component is being addressed by time-based, condition-based, or performance-based maintenance" by itself is a documentation issue and not an equipment maintenance issue. Suggest this warrants only a lower VSL, especially when one of the required components can only be time based.
Response: Thank you for your comments. The VSL for Requirement R1 addresses various levels of severity for degrees of non-compliance.		
SERC Protection and Control Sub-committee (PCS)	No	In R1, a "Failure to specify whether a component is being addressed by time-based, condition-based, or performance-based maintenance" by itself is a documentation issue and not an equipment maintenance issue. Suggest this warrants only a lower VSL, especially when one of the required components can only be time based.
Response: Thank you for your comments. The VSL for Requirement R1 addresses various levels of severity for degrees of non-compliance.		
Progress Energy Carolinas	No	In the VSL for R1, a failure to "specify whether a component is being addressed by time-based, condition-based, or performance-based maintenance" by itself is a documentation issue and not an equipment maintenance issue. Suggest this warrants only a lower VSL, especially when one of the required components can only be time based.
Response: Thank you for your comments. The VSL for Requirement R1 addresses various levels of severity for degrees of non-		

Organization	Yes or No	Question 4 Comment
compliance.		
Pacific Northwest Small Public Power Utility Comment Group	No	is possible that a component that failed to be individually identified per R1.1 was included by entity A's maintenance plan. This documentation issue gets a higher VSL than entity B that identified a component without maintaining it. We suggest the R1 VSL be change to Low, since we believe lack of maintenance to be more severe than documentation issues.
Response: Thank you for your comments. The VSL for Requirement R1 addresses various levels of severity for degrees of non-compliance. The risk related to non-compliance with the various requirements is addressed by assignment of the associated VRFs. Additionally, Requirement R1 and the associated VSLs have been substantially modified, and may address your concern.		
Pepco Holdings, Inc. - Affiliates	No	It is possible that a component that failed to be individually identified per R1.1 was included by entity A's maintenance plan. This documentation issue gets a higher VSL than entity B that identified a component without maintaining it. We suggest the R1 VSL be change to Low, since we believe lack of maintenance to be more severe than documentation issues.
Response: Thank you for your comments. The VSL for Requirement R1 addresses various levels of severity for degrees of non-compliance.		
PNGC Power	No	It is possible that a component that failed to be individually identified per R1.1 was included by entity A's maintenance plan. This documentation issue gets a higher VSL than entity B that identified a component without maintaining it. We suggest the R1 VSL be change to Low, since we believe lack of maintenance to be more severe than documentation issues.
Response: Thank you for your comments. The VSL for Requirement R1 addresses various levels of severity for degrees of non-compliance.		
Long Island Power Authority	No	1. R4 under Severe VSL mentions - Entity has failed to initiate resolution of maintenance-correctable issues. What proofs will satisfy the requirement that the entity has initiated the resolution.

Organization	Yes or No	Question 4 Comment
		2. R1 under Severe VSL - LIPA suggests moving the first criteria "The entity's PSMP failed to address one or more of the type of components included in the definition of "Protection System" under High VSL since this criteria cannot have the same VSL level as "Entity has not established a PSMP".
Response: Thank you for your comments. 1. The SDT is unable to categorically state what will satisfy a Compliance Monitor, but it seems that a work order addressing the maintenance-correctable issue would be one example. FAQ IV.1.B and Section 15.7 of the Supplementary Reference Document may also be helpful. **2.** The SDT believes that if an entity has missed one (of the five) entire component types in their program, they do not have a complete program.		
Northeast Power Coordinating Council	No	1. R4 under Severe VSL mentions - Entity has failed to initiate resolution of maintenance-correctable issues. What proof will satisfy the requirement that the entity has initiated the resolution? 2. R1 under Severe VSL - Move the first criteria "The entity's PSMP failed to address one or more of the type of components included in the definition of 'Protection System'" under High VSL since this criteria cannot have the same VSL level as "Entity has not established a PSMP".
Response: Thank you for your comments. 1. The SDT is unable to categorically state what will satisfy a Compliance Monitor, but it seems that a work order addressing the maintenance-correctable issue would be one example. FAQ IV.1.B and Section 15.7 of the Supplementary Reference Document may also be helpful. **2.** The SDT believes that if an entity has missed one (of the five) entire component types in their program, they do not have a complete program.		

Organization	Yes or No	Question 4 Comment
MidAmerican Energy Company	No	The lower VSL specification for R4 should allow for a small level of incomplete testing. Suggest changing “5% or less” to “from 1% to 5%”.
Response: Thank you for your comments. The SDT shares your concerns regarding the Lower VSL portion of the stepped VSLs not providing any tolerance for non-conformance without being non-compliant. However, the VSL Guidelines, which conform to the FERC VSL Order, specify that Lower shall be “5% or less.”The VRF and VSLs are only a starting point in determining the size of a penalty or sanction – the Compliance Enforcement Authority has latitude to consider aggravating factors and mitigating factors in determining whether there should be any penalty, and the size of any penalty. These mitigating and aggravating factors are oultined in the Compliance Monitoring and Enforcement Program. http://www.nerc.com/files/Appendix4C_Uniform_CMEP_10022009.pdf		
Springfield Utility Board	No	The Violation Risk Factors are problematic. 1. With all due respect, it seems that NERC still operates in a "BIG UTILITY" mind set. Big utilities have potentially hundreds or thousands of components under different device types. Looking at the VRFs, the percentages 5% or 15% as an example, are looked at based on a deep pool of multiple devices so a "BIG UTILITY" that misses a component or small number of components may not trigger a high severity level. However a small utility may have only a handful of components under each type. Therefore if the small utility were to miss one component all of a sudden the utility automatically triggers the 5% or 15% threshold. This type of dynamic unreasonable and not equitable. Therefore (in an attempt to work within the framework proposed), SUB proposes that there be a minimum number of components that might not be in compliance which result in a much lower Violation Severity Level. SUB suggests that NERC try to create a level playing field. If 15% of a Big Utility's total number of components averages at around 15 out of 100 total then perhaps a reasonable outcome would be that up to 5 components (regardless of the total number of components an entity has under each type) could be in violation without tripping into a high VSL.(the 5 components threshold may not apply to all types, this is just for illustrative purposes).

Organization	Yes or No	Question 4 Comment
		2. Also, are the missed components compounding? For example, if an entity missed 5 components on year three and another 5 components in year 10 is the VSL based on 10 components or 5 components. There should be a time horizon attached to the VSL such that the VSL does not count prior components that were brought into compliance through a past action. That intent may be to not have the VSLs be based on compounding numbers of components; however that should be made clear.
Response: Thank you for your comments. You discussed VRFs, but it appears that you are actually discussing VSLs. 1. The SDT shares your concern about the stepped VSLs. However, the VSL Guidelines, developed in accordance with the FERC VSL Order, establish the Lower VSL for stepped VSLs as "5% or less," the Medium VSL as "more than 5% but less than (or equal to) 10%," the High VSL as "more than 10% up to (and including) 15%," and the Severe VSL as "more than 15%." The SDT did, however, modify the VSLs for R1 so that they do not use percentages. **2.** The VSLs are assigned on the basis of percentages of components for which you are non-compliant. The SDT suggests that you review the Compliance Monitoring Enforcement Program for clarification on self-reports, and so forth.		
Tennessee Valley Authority	No	The Violation Severity Level Table listing for Requirement R4 lists the following under "Severe VSL"."Entity has failed to initiate resolution of maintenance-correctable issues" The threshold for a Severe Violation in this case is too broad and too subjective. The threshold needs to be clearly defined with low, medium, and high criteria.
Response: Thank you for your comments. The VSLs for Requirement R4 have been modified to provide stepped VSLs for initiation of resolution of maintenance-correctable issues.		
BGE	No	The VSL's as proposed may be reasonable but it is difficult to endorse them until the ambiguity in R1.1 is reduced.
Response: Thank you.		
Duke Energy	No	The VSLs for PRC-005-2 requirements R1, R2 and R4 have significantly tighter

Organization	Yes or No	Question 4 Comment
		percentages than the corresponding requirements in PRC-005-1. We believe that the Lower VSL should be up to 10%, the Moderate VSL should be 10%-15%, the High VSL should be 15% to 20%, and the Severe VSL should be greater than 20%, which is still a lower percentage than the 25% Lower VSL currently in PRC-005-1.
Response: Thank you for your comments. The SDT shares your concern abuout the stepped VSLs. However, the VSL Guidelines, developed in accordance with the FERC VSL Order, establish the Lower VSL for stepped VSLs as "5% or less," the Medium VSL as "more than 5% but less than (or equal to) 10%," the High VSL as "more than 10% up to (and including) 15%," and the Severe VSL as "more than 15%."		
Indeck Energy Services	No	1. The VSL's treat all entities, components and problems alike. By combining 4 protection maintenance standards, it elevates the VSL on otherwise minor problems to the highest levels of any of the predecessor standards. The threshold percentages are very arbitrary. Severe VSL doesn't in any way relate to reliability. For a small generator to miss or mis-categorize 1 out of 7 relays is unlikely to have any impact on reliability, much less deserving a severe VSL. The R2 & R4 VSL's don't care about results of the program, only whether all components are covered. Half of the components could fail annually and it's not a Severe VSL. 2. The R3 VSL allows 4% countable events, which can be hundreds for a large entity and only allows a few for a small entity.
Response: Thank you for your comments. 1. The VSL Guidelines, developed in accordance with the FERC VSL Order, establish the Lower VSL for stepped VSLs as "5% or less," the Medium VSL as "more than 5% but less than (or equal to) 10%," the High VSL as "more than 10% up to (and including) 15%," and the Severe VSL as "more than 15%." VSLs are not intended to assess the risk to reliability of noncompliance, VSLs are intended to identify different degrees of noncompliance with the associated requirement. The VRFs assess the risk to reliability of noncompliance with the requirement. **2.** Relating to the R3 VSL, the "4% countable events" corresponds to the requirement relevant to performance-based programs in Attachment A. This value was determined to be a statistically significant value relating to performance-based programs, which		

Organization	Yes or No	Question 4 Comment
may not be practical for a small entity to implement without aggregation with other entities having similar programs. See Section 9 of the Supplementary Reference Document.		
US Bureau of Reclamation	No	1. The VSL's use terms that are not tied back to a requirement and appear to be based on the concept that every component will cause an impact on the BES. The VSL's use the term "countable event" to score the VSL; however, there is no requirement associated with the number of "countable events". 2. The VSL's should allow for minor gaps in maintenance documentation where there is no impact to the BES if the component failed.
Response: Thank you. 1. The VSL for Requirement R3, which you are questioning, addresses limits on "countable events" as they relate to the requirements for a Perfomance Based program within Attachment A. 2. The NERC criteria for VSLs do not currently permit them to allow some level of non-performance without being in violation. The VRF and VSLs are only a starting point in determining the size of a penalty or sanction – the Compliance Enforcement Authority has latitude to consider aggravating factors and mitigating factors in determining whether there should be any penalty, and the size of any penalty. These mitigating and aggravating factors are oultined in the Compliance Monitoring and Enforcement Program. http://www.nerc.com/files/Appendix4C_Uniform_CMEP_10022009.pdf		
Black Hills Power	No	-VSL's are based on percentages of components, where the definition of a 'component' is in many cases up to the entity to interpret (see PRC-005-2 FAQ sheet, Page 2). Basing VSL's on an entities interpretation (or count) of 'components' is not an equitable measure of severity level.
Response: Thank you for your comment. A definition of "Component" has been added to the Standard to provide guidance and help provide consistency.		
JEA	No	We could find no rational provided for the % associated with each VSL, or component

Organization	Yes or No	Question 4 Comment
		rationale used to determine the proposed values listed. Is this included in some documentation that is available but not included as part of this review?
Response: Thank you for your comments. The percentages, are established in accordance with the VSL Guidelines, developed in accordance with the FERC VSL Order, which establish the Lower VSL for stepped VSLs as "5% or less," the Medium VSL as "more than 5% but less than (or equal to) 10%," the High VSL as "more than 10% up to (and including) 15%," and the Severe VSL as "more than 15%." The VSL Guidelines are posted on the Standard Resources web page: http://www.nerc.com/files/VSL_Guidelines_20090817.pdf		
American Electric Power	Yes	
American Transmission Company	Yes	
Arizona Public Service Company	Yes	
Bonneville Power Administration	Yes	
Consumers Energy Company	Yes	
Dynegy Inc.	Yes	
Exelon	Yes	
FirstEnergy	Yes	
Great River Energy	Yes	

Organization	Yes or No	Question 4 Comment
Hydro One Networks	Yes	
MRO's NERC Standards Review Subcommittee (NSRS)	Yes	
Nebraska Public Power District	Yes	
PacifiCorp	Yes	
Public Service Enterprise Group ("PSEG Companies")	Yes	
ReliabilityFirst Corp.	Yes	
South Carolina Electric and Gas	Yes	
The United Illuminating Company	Yes	
We Energies	Yes	
Western Area Power Administration	Yes	
Y-W Electric Association,	Yes	

Organization	Yes or No	Question 4 Comment
Inc.		
MEAG Power	Yes	It would be good to have the basis of the 5%, 10% and 15% defined. With time and experience these percentages may need to be changed.
Response: Thank you for your comment. The VSL Guidelines, developed in accordance with the FERC VSL Order, establish the Lower VSL for stepped VSLs as "5% or less," the Medium VSL as "more than 5% but less than (or equal to) 10%," the High VSL as "more than 10% up to (and including) 15%," and the Severe VSL as "more than 15%."		
Manitoba Hydro	Yes	There is no rational provided for the % associated with each VSL, or component rationale used to determine the proposed values listed.
Response: Thank you for your comment. The VSL Guidelines, developed in accordance with the FERC VSL Order, establish the Lower VSL for stepped VSLs as "5% or less," the Medium VSL as "more than 5% but less than (or equal to) 10%," the High VSL as "more than 10% up to (and including) 15%," and the Severe VSL as "more than 15%."		

5. **The SDT has revised the "Supplementary Reference" document which is supplied to provide supporting discussion for the Requirements within the standard. Do you agree with the changes? If not, please provide specific suggestions for change.**

Summary Consideration: Most commenters seemed to appreciate the information provided within the Supplementary Reference document. Many commenters asked whether the Supplementary Reference was part of the Standard, to which the SDT replied, "No."

Several commenters also were concerned that the Supplementary Reference document may not be kept current with the Standard itself. There were assorted individual technical comments about the Supplementary Reference document, to which the SDT responded. Several comments irrelevant to the Supplementary Reference document were also offered; the SDT offered responses relevant to the comments.

Organization	Yes or No	Question 5 Comment
PPL Supply		No Comment.
Santee Cooper		No Comment.
SERC Protection and Control Sub-committee (PCS)		The SERC PCS expresses no opinion on this question.
San Diego Gas & Electric	No	
Ameren	No	1) Is this document considered part of the standard? We expect to use it as a reference in developing our PSMP, during audits, and for self-certification as an authentic source of information. It is also unclear how this document will be controlled (i.e. Revised and

Organization	Yes or No	Question 5 Comment
		Approved, if at all). 2) On page 22 please clarify that only applies to high speed ground switches associated with BES elements. 3) We appreciate the SDT providing this valuable reference.
Response: Thank you for your comments. 1. This document provides supporting discussion, but is not part of the Standard. The SDT intends that it be posted as a reference document, accompanying the Standard. As established in SDT Guidelines, the Standard is to be a terse statement of Requirements, etc., and is not to include explanatory information like that included in the Supplementary Reference document. The SDT intends that this document help explain, clarify, and in some cases suggest methods to comply with the Standard. The Standards Committee has a formal process for determining whether to authorize posting a reference document with an approved standard. That process is posted on the Standard Resources web page – here is a link to the procedure: http://www.nerc.com/files/SC_Process_Approve_Supporting_References_Approved_10Mar08.pdf 2. The Standard applies to High-Speed Ground Switches that are used to trip BES elements or that are used to protect BES elements. In response to your comment, the SDT has modifed the Supplementary Reference Section 15.3 as follows: "The SDT believes that this is essentially a transferred-tripping device without the use of communications equipment. If this high-speed ground switch is "…applied on, or designed to provide protection for the BES…" then this device needs to be treated as any other Protection System component. The control circuitry would have to be tested within 12 years and any electromechanically operated device will have to be tested every 6 years. If the spring-operated ground switch can be disconnected from the solenoid triggering unit then the solenoid triggering unit can easily be tested without the actual closing of the ground blade. 3. Thank you.		
Xcel Energy	No	1. As we commented on in the previous draft of the standard that proposed the Supplementary Reference and FAQ, we are concerned as to what role these documents will play in compliance/auditing. It is also unclear how these documents will be controlled (i.e. Revised and Approved, if at all). 2. Inconsistencies have been identified between proposed standard and the documents

Organization	Yes or No	Question 5 Comment
		(e.g. page 29 of FAQ example 1).
Response: Thank you for your comments. 1. This document provides supporting discussion, but is not part of the Standard. The SDT intends that it be posted as a Reference Document, accompanying the Standard. As established in SDT Guidelines, the Standard is to be a terse statement of Requirements, etc., and is not to include explanatory information like that included in the Supplementary Reference document. The Supplementary Reference and FAQ have been revised to make them consistent with the new version of PRC-005-2. The Standards Committee has a formal process for determining whether to authorize posting a reference document with an approved standard. That process is posted on the Standard Resources web page – here is a link to the procedure: http://www.nerc.com/files/SC_Process_Approve_Supporting_References_Approved_10Mar08.pdf 2. Thank you. The FAQ has been revised to make it consistent with the new version of PRC-005-2 and the Supplementary Reference document.		
Pepco Holdings, Inc. - Affiliates	No	Figure 1 & 2 Legend (page 29), Row 5, Associated Communications Systems, includes Tele-protection equipment used to convey remote tripping action to a local trip coil or blocking signal to the trip logic (if applicable). This description does not include all the various types of signals communicated for proper operation of various protective schemes (i.e., DUTT, POTT, DCB, Current Differential, Phase Comparison, synchro-phasors, etc.) A more inclusive and generic description might be - Tele-protection equipment used to convey specific information, in the form of analog or digital signals, necessary for the correct operation of protective functions. This is also consistent with the revised definition of Protection System. Conversely, excluded equipment would be - Any communications equipment that is not used to convey information necessary for the correct operation of protective functions.
Response: Thank you for your comment. The Supplementary Reference and FAQ have been revised to make them consistent with the new version of PRC-005-2 and each other, and to incorporate language similar to your suggestion.		

Organization	Yes or No	Question 5 Comment
MEAG Power	No	Further clarification is needed. The information provided on verifying outputs of voltage and current sensing devices is confusing. In one part, it indicates that the intent is to verify that intended voltages and currents are getting to the relay apparently without regards to accuracy. A practical method of verifying the output of VTs and CTs is not identified and need to be identified.
Response: Thank you for your comments. The intent of the maintenance activity is to verify that the necessary values reach the protective relays. The SDT believes that a maintenance plan that requires infra-red scanning of VTs and CTs is not sufficient. The SDT further believes that routine commissioning tests, while certainly allowed, need not be required in the Standard because mere ratio tests would not prove that the values reach the relay. A practical method is to read the values at the relays and, as you state, verify that the quantities meet your needs. The SDT believes that the discussion in Section 15.2 of the Supplementary Reference is sufficient, and is supplemented in several subsections of FAQ II.3.		
Indeck Energy Services	No	In 2.3, the applicability is stated to have been modified. As discussed at the FERC Technical Conference on Standards Development, the goal of the standards program is to avoid or prevent cascading outages--specifically not loss of load. The modified applicability moves away from the purpose of the standards program to an undefined fuzzy concept. Applicable Relays ignore the fact that some relays, or even some entities, have little to no affect on reliability. The global definition of Protective System encompasses all equipment, and doesn't differentiate the components that meet the purpose of the standards program. The Supplementary Reference doesn't overcome the inherent shortcomings of the standard.
Response: Thank you for your comments. The Supplementary Reference is intended to help clarify the Standard.		

Organization	Yes or No	Question 5 Comment
The United Illuminating Company	No	Include a detailed example of an Inventory list. Allow for different means of maintaining the lists electronically, that is, as spreadsheets, or databases.
Response: Thank you for your comments. The Supplementary Reference is intended to help clarify the Standard, not add to the Requirements of the Standard. Maintaining your lists is a business practice that you make, spreadsheets and/or databases have not been precluded in the Standard or in any reference document.		
US Bureau of Reclamation	No	It is not reasonable to assert that a statistical analysis of survey data is reliability based justification for requiring specific maintenance intervals. The reference document admits that intervals varied widely. To assert a postage stamp interval does not account for other variables which optimize a specific maintenance program. That is not saying that the reference documents are worthless. Indeed it has many good suggestions. However, to impugn the maintenance programs in practice because they do not follow the "weighted average" is hardly scientific or credible. The reference document should analyze the maintenance programs from the stand point of the outages associated with those facilities. If a specific maintenance practice was shown to have compromised the performance of the facility and the reliability of the BES, then it would added to the statistical database of practices which would not be acceptable. Now the statistical analysis of the database would show that certain practices have consequences which impact reliability and a requirement can be constructed to disallow them.
Response: Thank you for your comments. FERC directed the SDT to set maximum time intervals between maintenance activities. The SDT recognized that different types of equipment, different generations of equipment, different failure modes of equipment and different versions of time-based maintenance had to be considered. The SDT agrees with the commenter that the Standard allows statistical analysis and performance-based maintenance allows an entity to create time intervals that could exceed any “weighted-averages” time-based intervals. The Supplementary Reference adds a section (9) to show how an entity can create a performance-based maintenance interval.		

Organization	Yes or No	Question 5 Comment
Public Service Enterprise Group ("PSEG Companies")	No	1. Suggest that figure 2 has a line of demarcation added that shows components specifically not part of the standard requirements. (Medium voltage bus). 2. Battery charger should be removed from table of components when a storage battery is used for the DC supply.
Response: Thank you for your comments. 1. The figures are intended to be general information and not to be inclusive of all situations. **2.** The modification of the Protection System definition from “station battery” to “station dc supply” is intended to include battery chargers, and Table 1-4 within draft PRC-005-2 includes activities specifically related to battery chargers.		
JEA	No	The Supplementary Reference document is critical in our current compliance environment to be approved as part of the standard and any standard modifications need to be kept in synchronization with the FAQ and the Supplementary Reference.
Response: Thank you for your comments. **1.** This document provides supporting discussion, but is not part of the Standard. The SDT intends that it be posted as a reference document, accompanying the S. As established in SDT Guidelines, the Standard is to be a terse statement of requirements, etc., and is not to include explanatory information like that included in the FAQ and Supplementary Reference. The Supplementary Reference and FAQ have been revised to make them consistent with the new version of PRC-005-2.		
Long Island Power Authority	No	1. There is no guidance on how to calculate the total number of components and thus, the percentages under different severity levels. FAQ provides some insight into how an entity can count components however; an example in the reference document will provide clarity. 2. Page 7 of the redline version of Supplemental Reference - bullet 1 under Maintenance Services, paragraph 2, it says “ If specific protection scheme components have demonstrated correct performance within specifications, the maintenance test time clock

Organization	Yes or No	Question 5 Comment
		is reset for those components. LIPA believes that resetting the time clock will make tracking difficult (unless entities have a sophisticated automated tool for tracking). Another option where an entity can take credit for a correct performance within specifications at the time of the maintenance cycle should be included.
Response: Thank you for your comments. 1. A definition of "Component" has been added to the draft Standard to provide guidance. The Standard and the Tables have also been revised throughout for clarity. **2.** The example cited is only offered as an option for entities that may wish to make use of observed real-time operations within their PSMP. An entity may, if desired, reset the time clock on a correct real-time occurrance. An entity does not have to "reset the time clock" if it chooses to maintain all of its components on a set schedule. The example given is merely one method to log a completed tripping action, which would alleviate the need to validate that same trip path. The SDT acknowledges that there are many ways to prove circuits; real-time switching or fault-clearing activities can be used but are not the only methods.		
Northeast Power Coordinating Council	No	1. There is no guidance on how to calculate the total number of components and thus, the percentages under different severity levels. FAQ provides some insight into how an entity can count components. 2. However; an example in the reference document will provide clarity. Page 7 of the redline version of Supplemental Reference - bullet 1 under Maintenance Services, paragraph 2 states " If specific protection scheme components have demonstrated correct performance within specifications, the maintenance test time clock is reset for those components." Resetting the time clock will make tracking difficult (unless entities have a sophisticated automated tool for tracking). Another option where an entity can take credit for a correct performance within specifications at the time of the maintenance cycle should be included.
Response: Thank you for your comments. 1. A definition of "Component" has been added to the draft Standard to provide guidance. The Standard and the Tables have also		

Organization	Yes or No	Question 5 Comment
been revised throughout for clarity. **2.** The example cited is only offered as an option for entities that may wish to make use of observed real-time operations within their PSMP. An entity may, if desired, reset the time clock on a correct real-time occurrance. An entity does not have to "reset the time clock" if it chooses to maintain all of its components on a set schedule. The example given is merely one method to log a completed tripping action, which would alleviate the need to validate that same trip path. The SDT acknowledges that there are many ways to prove circuits; real-time switching or fault-clearing activities can be used but are not the only methods.		
Northeast Utilities	No	There is no guidance on how to calculate the total number of components and thus, the percentages under different severity levels. FAQ provides some insight into how an entity can count components however; an example in the reference document will provide clarity.
Response: Thank you for your comments. A definition of "Component" has been added to the draft Standard to provide guidance. The Standard and the Tables have also been revised throughout for clarity.		
Tennessee Valley Authority	No	1. There needs to be a defined method of deferral when equipment can't be gotten out of service until a scheduled outage. 2. Give some examples of what "inputs and outputs that are essential to proper functioning of the Protection System" are. 3. a) Define what a "Control and Trip Circuit" is. 4. b) Is there one per relay? 5. c) Do I have to have a list of them in my work management system?
Response: Thank you for your comments. 1. "Grace periods" within the Standard are not measurable, and could lead to persistently increasing intervals. 2. Some examples of outputs may include but are not limited to: trip, initiate zone timer, initiate breaker fail. Some examples of input may include but are not limited to: breaker fail initiate, start timer. This cannot be an all-inclusive list as any given scheme could have many variations. In short, if your scheme requires a specific input to function properly then you must have that input		

Organization	Yes or No	Question 5 Comment
maintained; if your scheme has a specific output that must function then it must be maintained. If the input or output is used for a non-protective function (such as, but not limited to, Sequence-of-Events Recorder, alarm or indication) then it does not have to be maintained under this Standard. See Section 15.3 of the Supplementary Reference and FAQ II.2.L. 3. a) Circuitry needed for the correct operation of the protective relay. A definition of "Component" has been added to the draft Standard to provide guidance. See Section Section 15.3 of the Supplementary Reference. 4. b) This depends on your scheme and your relay. A definition of "Component" has been added to the draft Standard to provide guidance. **5.** c) The SDT believes that a PSMP that requires maintenance upon all of the circuits, and includes a check-off (list) system that accounts for all circuits being verified would suffice.		
American Electric Power	Yes	
American Transmission Company	Yes	
Arizona Public Service Company	Yes	
BGE	Yes	
Black Hills Power	Yes	
Constellation Power Generation	Yes	
Consumers Energy Company	Yes	

Organization	Yes or No	Question 5 Comment
Duke Energy	Yes	
Dynegy Inc.	Yes	
Entergy Services	Yes	
Exelon	Yes	
Great River Energy	Yes	
Hydro One Networks	Yes	
Manitoba Hydro	Yes	
MidAmerican Energy Company	Yes	
MRO's NERC Standards Review Subcommittee (NSRS)	Yes	
NERC Staff	Yes	
Pacific Northwest Small Public Power Utility Comment Group	Yes	
PacifiCorp	Yes	

Organization	Yes or No	Question 5 Comment
PNGC Power	Yes	
Progress Energy Carolinas	Yes	
ReliabilityFirst Corp.	Yes	
South Carolina Electric and Gas	Yes	
Southern Company Transmission	Yes	
The Detroit Edison Company	Yes	
We Energies	Yes	
Western Area Power Administration	Yes	
Y-W Electric Association, Inc.	Yes	
WECC	Yes	Compliance does agree with the clarity and the Supplementary Reference should be specially referenced where appropriate the Tables 1a, 1b, 1c and Attachment A that are included with the Standard. But this reference is not a part of the approved standard and there are no controls which prevent changes in the reference document that could impact the scope or intent of the standard. If the standard is approved with reference to the Supplementary Reference then future changes to the Supplementary Reference should not be allowed without due process. Only the version in existence at the time of approval of the

Organization	Yes or No	Question 5 Comment
		standard could be used to clarify or explain the standard.
Response: Thank you for your comments. The SDT intends that the Supplementary Reference document be updated as the Standard is revised to maintain its relevance to the application of the Standard. The Standards Committee has a formal process for determining whether to authorize posting a reference document with an approved standard. That process is posted on the Standard Resources web page – here is a link to the procedure: http://www.nerc.com/files/SC_Process_Approve_Supporting_References_Approved_10Mar08.pdf		
Nebraska Public Power District	Yes	Is this document considered part of the standard and may be referenced during audit and self-certification as an authentic source of information?
Response: Thank you for your comments. This document provides supporting discussion, but is not part of the Standard. The SDT intends that these be posted as reference documents, accompanying the Standard. The Standards Committee has a formal process for determining whether to authorize posting a reference document with an approved standard. That process is posted on the Standard Resources web page – here is a link to the procedure: http://www.nerc.com/files/SC_Process_Approve_Supporting_References_Approved_10Mar08.pdf		
Springfield Utility Board	Yes	SUB appreciates that Time Based, Performance Based, and Condition Based programs can be combined into one program. However it should be clear that a utility may include one, two or all three of these types of programs for each individual device type. Currently the language reads:"TBM, PBM, and CBM can be combined for individual components, or within a complete Protection System." The "and" requires all three to be combined if they are combined. SUB suggests the “and” be changed to "or". Language Change: "TBM, PBM, or CBM can be combined for individual components, or within a complete Protection System."
Response: Thank you for your comments. The SDT modified Requirement R1 of the Standard.		
FirstEnergy	Yes	We support the reference document and appreciate the SDT's hard work developing this

Organization	Yes or No	Question 5 Comment
		document. We offer the following suggestions for possible improvements: 1. The reference document should be linked in Section F of the standard. Otherwise it may be difficult for someone to navigate the NERC website in search of the document. 2. Section 2.2 - It would be helpful if a short discussion of the reasons for the changes to the definition of Protection System was included in this reference document. In addition, it would be beneficial to discuss what is included in "dc supply" components, such as "dc supplies include battery chargers which are required to be maintained per the Tables in PRC-005-2." 3. Section 8.1 - The fourth bullet which reads "If your PSMP (plan) requires more then you must document more." Should be removed. This is already covered in the sixth bullet which states "If your PSMP (plan) requires activities more often than the Tables maximum then you must document those activities more often."

Response: Thank you for your comments.

1. This issue may be a good idea. The Standards Committee has a formal process for determining whether to authorize posting a reference document with an approved standard. That process is posted on the Standard Resources web page – here is a link to the procedure: http://www.nerc.com/files/SC_Process_Approve_Supporting_References_Approved_10Mar08.pdf.
2. The reasons for the definition change are transitory and should not be in the Supplementary Reference document. The reasons may be found in the SAR for Project 2007-17. See Section 15.4 of the Supplementary Reference for discussion about batteries and dc supply.
3. The SDT disagrees with your assertion. The first cited example applies to the activities within your program, and the second applies to the intervals. These are related but separate. The fourth bullet in Section 8.1 has been revised to clarify.

6. The SDT has revised the "Frequently-Asked Questions" (FAQ) document which is supplied to address anticipated questions relative to the standard. Do you agree with these changes? If not, please provide specific suggestions for change.

Summary Consideration: Most commenters seemed to appreciate the information provided within the FAQ document. Many commenters asked whether the FAQ was part of the Standard, to which the SDT replied, "No." Several commenters also were concerned that the FAQ document may not be kept current with the Standard itself. There were assorted individual technical comments about the FAQ, to which the SDT responded. Several comments irrelevant to the FAQ were also offered; the SDT offered responses relevant to the comments.

Organization	Yes or No	Question 6 Comment
MEAG Power		No comment.
PPL Supply		No Comment.
Santee Cooper		No comment.
SERC Protection and Control Sub-committee (PCS)		The SERC PCS expresses no opinion on this question.
Indeck Energy Services	No	
San Diego Gas & Electric	No	
Consumers Energy	No	1. FAQ II.3A attempts to clarify the requirements of "Verify the proper functioning of the current and voltage signals necessary for Protection System operation from the voltage

Organization	Yes or No	Question 6 Comment
Company		and current sensing devices to the protective relays" suggesting that "simplicity can be achieved" by verifying that the protective relays are receiving "expected values." It concludes with a statement of the need to "ensure that all of the individual components are functioning properly ..." implying that just verifying "expected values" at the protective relay end of the circuit may be inadequate. 2. FAQ II.4D describes what is required for testing of aux relays to include, "that their trip output(s) perform as expected". Does that include timing tests? (Example - high speed ABB AR relays vs. standard AR relays). 3. The SDT responses to the Draft 1 comments regarding "grace periods" essentially says, "Absolutely not". However, FAQ IV.1.D reflects data retention requirements relative to an entities' program which includes a grace period!

Response: Thank you for your comments.

1. "Expected values" was intended to convey that the current and/or voltage sensing devices were functioning properly. The SDT intentionally left out any Requirement in the Standard that the values being read at the protective relays be within a specific tolerance because each entity may have valid rationale for tolerances at any level. To find a current or voltage value that is wrong would indicate that something in the voltage or current secondary delivery system is not functioning properly and needs corrective action. Typically an entity can review values measured at the relay and determine that the values are as expected and that the maintenance activity has been satisfied.
2. If an entity has designed a protection scheme which contains parts that need to function in a specific manner then those parts need to be routinely maintained to assure that they perform at that level. The SDT believes that Protection Systems exist at all levels of complexity and that some systems will be easier to test than others, but that all components that are necessary for the proper functioning of the Protection System must be maintained. In short, if an entity decided that specific parts were necessary for the proper operation of the Protection System then those parts need to be routinely maintained.
3. There is no "grace period" allowed by the Standard; a "grace period" is not measurable. That means that the intervals between the specified maintenance activities in the Standard cannot exceed those established within the Tables. However, many entities have built in "allowable extensions" to their intervals (thus creating "grace periods" within their own PSMP). In these particular PSMP's the total time allowed between the specified maintenance activities (including any allowable extensions or "grace periods") does not

Organization	Yes or No	Question 6 Comment
exceed the maximum allowed time interval established in the Standard. For example, an entity has in their PSMP that "…the electro-mechanical relays will be tested every 3 calendar years with a maximum allowable extension of 18 additional calendar months to allow for scheduling difficulties and unplanned emergencies." In this way the entity will be audited to their PSMP, they have added 50% time in the form of their own grace period and the maximum time between the specified maintenance activities does not exceed the time interval established in the Standard. Also see FAQ IV.2.H for additional discussion on this.		
Xcel Energy	No	1. As we commented on in the previous draft of the standard that proposed the Supplementary Reference and FAQ, we are concerned as to what role these documents will play in compliance/auditing. It is also unclear how these documents will be controlled (i.e. Revised and approved, if at all). 2. Inconsistencies have been identified between proposed standard and the documents (e.g. page 29 of FAQ example 1).
Response: Thank you for your comments. **1.** This document provides supporting discussion, but is not part of the Standard. The SDT intends that it be posted as a reference document, accompanying the Standard. As established in SDT Guidelines, the Standard is to be a terse statement of requirements, etc., and is not to include explanatory information like that included in the Supplementary Reference document. The FAQ and the Supplementary Reference documents have been revised to make them consistent with the new version of PRC-005-2. 1. The Standards Committee has a formal process for determining whether to authorize posting a reference document with an approved standard. That process is posted on the Standard Resources web page – here is a link to the procedure: http://www.nerc.com/files/SC_Process_Approve_Supporting_References_Approved_10Mar08.pdf **2.** Thank you. The FAQ has been revised to be consistent with the new version of the Standard.		
Nebraska Public Power District	No	1. FAQ 2.G, page 24 - NPPD believes system reliability will be decreased if an entity is considered non-compliant for exceeding a PSMP stated interval that is within the PRC-005-2 Maximum Maintenance Interval. Considering an entity non-compliant for such a situation will encourage establishment of intervals that only meet the minimum standard. There should be one standard interval that all entities must be monitored against. If an entity wants to perform maintenance more frequently, it should not be subject to non-

Organization	Yes or No	Question 6 Comment
		compliance if it misses its target but meets the Maximum Maintenance Interval in the standard. 2. There are definitions at the beginning of the FAQ that should be contained in the NERC definitions and not in an FAQ. Placing these in an approved definition will help avoid interpretation issues that would arise during future audits.
Response: Thank you for your comments. 1. The SDT believes that there are many reasons that would prompt an entity to have some intervals that are more frequent than those intervals established in the Standard (performance-based maintenance is but a single example). If an entity chooses to perform maintenance more often than the limits set within the Standard then it may do so. If an entity chooses to perform maintenance more often than the limits set within its own PSMP then it may do so. **2.** The SDT desires to conform to certain rules regarding this issue. If a term appears in the NERC Glossary then all Standards will have to conform to the definition established. If the terms are shown elsewhere, in the FAQ for example, then clarity can be achieved when the Standard is read. The SDT intends to help clarify by creating the two supporting reference documents, but not to restrict other Standards to the uses of some words that will inevitably be shared amongst Standards. The SDT has also moved several of these definitions to the Standard with the intent that they be part of only this Standard and not a general definition within the NERC Glossary of Terms.		
Progress Energy Carolinas	No	1. FAQ II.2.A: What degree of testing is required for a relay firmware upgrade? Complete commissioning tests? 2. FAQ V.1.A. There appears to be a typo in Example #1 for “Vented lead-acid battery with low voltage alarm connected to SCADA (level 2)”: Table 1b does not list any level 2 requirements. Rather, the table refers reader back to the Level 1 requirements. Same comment for Example #2 as well. 3. FAQ III.1.A: Project 2009-17 provides a response to a request for interpretation of the term “transmission Protection System” as related to PRC-004-1 and PRC-005-1. The interpretation addresses the boundaries of the transmission system. NERC should

Organization	Yes or No	Question 6 Comment
		investigate whether this same boundary should be defined within the new PRC-005-2. 4. Also, numerous potential boundary issues exist between entities which should be contemplated and addressed. See the examples below: a) Utility A may own equipment in Utility B's substation. Utility A contracts Utility B to perform maintenance on their equipment. However, the two utilities have different maintenance programs and intervals for the same types of equipment. Who is responsible for NERC compliance? Would Utility A be found in violation because their equipment is being maintained under Utility B's program which deviates from Utility A's maintenance basis? b) EMC protection is fed from a utility's instrument transformers. Who is responsible for validation of the relay inputs and testing of the instrument transformers? c) Utility-owned communication units (used for transfer trip or carrier blocking) are coupled to the utility's power line using customer-owned CCVTs. Who is responsible for maintenance and testing of these CCVTs? d) Utility A owns all equipment at one end of line (line terminal A) and Utility B owns all equipment at other end of line (line terminal B). Who is responsible for demonstrating the carrier blocking scheme or POTT scheme works correctly?

Response: Thank you for your comments.

1. Complete commissioning tests can be required by the entity. Commissioning tests are not specified within the Standard. The status of the relay should be that it is ready for use after the firmware upgrade. If the maintenance activities were performed that are specified within the Standard and its PSMP, then the entity may choose to reset the time clock for maintenance for that device.
2. The Tables within the Standard have been completely revised, and the FAQ revised to align.
3. When the interpretation (Project 2009-17) is approved, the SDT for PRC-005-2 will consider if the interpretation is appropriate for PRC-005-2 and make associated changes.

   a) The owner of the equipment is responsible for assuring that the equipment is maintained according to its PSMP. This is

Organization	Yes or No	Question 6 Comment
consistent with the concepts in the Functional Model. b) The owner of the equipment is responsible for assuring that the equipment is maintained according to its PSMP. c) The owner of the equipment is responsible for assuring that the equipment is maintained according to its PSMP. d) The owner of the equipment is responsible for assuring that the equipment is maintained according to its PSMP. The entities should coordinate on equipment that affects each other to assure that the equipment is tested in such a fashion that it complies with both entities' PSMP.		
Tennessee Valley Authority	No	If a relay is tested during a generator outage, what date is allowed to be used for compliance - actual test date or date equipment was returned to service? These are usually only a few weeks apart, but may be as much as three months different.
Response: Thank you for your comments. An entity's own records are used to judge compliance. The date placed on the evidence should be the date on which testing of the relevant Protection System component is completed.		
Northeast Utilities	No	Page 2 under Component definition, term "somewhat arbitrary" is used by the drafting team to address what constitutes a dc control circuit. Though the drafting team has provided entities with flexibility to define as per their methodologies, it is recommended to clearly determine "what constitutes a dc control circuit" since it will be used to determine compliance.
Response: Thank you for your comments. The SDT believes that if the circuit is needed for the Protection System to operate or function correctly, then that circuit must be maintained.		
South Carolina Electric and Gas	No	Question/Answer 4-C (Pg. 10 of FAQ) seems to indicate that by documenting breaker operations for fault conditions the table 1b requirements for control circuitry (Trip Coils and Auxiliary relays) can be satisfied. It is possible that even though a breaker successfully

Organization	Yes or No	Question 6 Comment
		operates for a fault condition one trip coil of a primary/backup design can be inoperable and "masked" by the good trip coil. Although it is likely that a faulty trip coil would be caught by monitoring of continuity it is not a certainty that both trip coils actually operated to clear a fault (example-mechanical binding)
Response: Thank you for your comments. The SDT agrees. While a successful trip operation can fulfill requirements of the Standard, it is useful only for the trip paths for which successful operation was demonstrated and documented.		
BGE	No	The FAQ is a very helpful document. A few more changes would be beneficial. See comments regarding manufactures' advisories and R1.1 under section 7 below. It is our recommendation that manufacturers service advisories not be an implied part of the PMSP requirements and that the expectations for R1.1 be more explicitly described in the FAQ.
Response: Thank you for your comments. The Supplementary Reference and the FAQ are not a part of the Standard. The intent of the SDT is that the documents help provide clarity, not to imply additional maintenance. The required minimum maintenance activities are listed in the Standard. Requirement R1 and the tables have been extensively revised.		
American Transmission Company	No	The FAQs are helpful, however, with the revised standard as written; ATC has issues with the answers provided. Please refer to Question #7 for areas of concern.
Response: Thank you for your comments. The Standard and the Tables have been revised to add clarity. The FAQ and the Supplementary Reference documents have been revised to make them consistent with the new version of PRC-005-2. Please see our responses to your comments in Question 7.		
MRO's NERC Standards Review Subcommittee	No	The FAQs are helpful, however, with the revised standard as written, The NSRS has issues with the answers provided. Please refer to Question #7 for areas of concern.

Organization	Yes or No	Question 6 Comment
(NSRS)		
Response: Thank you for your comments. The Standard and the tables have been revised to improve clarity. The FAQ and the Supplementary Reference documents have been revised to make them consistent with the new version of PRC-005-2. Please see our responses to your comments in Question 7.		
Constellation Power Generation	No	The PT/CT testing section is implying that the testing must be completed while energized, which is counter to industry practice at generation facilities. Leeway should be given to the entities to devise their own methods for testing voltage and current sensing devices and wiring to the protection system.
Response: Thank you for your comments. The required minimum maintenance activities are listed in the Standard. The intent of the cited section is to provide examples of how an entity <u>might</u> perform the testing. Any examples listed in either of the supporting documents should be looked upon as suggestions; these suggestions are not considered to be a complete list of the methods available. To the contrary, the Standard and the supporting documents were written considering that there are many ways to achieve a good test. Leeway is certainly available in how an entity complies with the Standard as the maintenance activities generally specify "what" must be achieved but not "how" an entity achieves it. Please see FAQ II.3.D.		
Pepco Holdings, Inc. - Affiliates	No	1. The three month inspection interval for communication equipment mentioned in FAQ II 6 B should be extended to 12 - 18 months (see response to Question #1). 2. In addition, the example used in this section should address what is expected for ON-OFF carrier systems. Checking that the equipment is free from alarms and still powered up does not seem sufficient to verify functionality. The FAQ states that the concept should be that the entity verifies that the communication equipment...is operable through a cursory inspection and site visit. However, unlike FSK schemes where channel integrity can easily be verified by the presence of a guard signal, ON-OFF carrier schemes would require a check-back or loop-back test be initiated to verify channel integrity. If the carrier set was not equipped with this feature, verification would

Organization	Yes or No	Question 6 Comment
		require personnel to be dispatched to each terminal to perform these manual checks.
Response: Thank you for your comments. 1. The SDT believes that the 3-month interval is proper for unmonitored communications systems. **2.** As you suggest, this funcitionality would normally be verified by a manual or automatic checkback system, and, even then, a station visit would be necessary if alarms are not provided. Where such equipment is not available, a station visit would be necessary.		
Public Service Enterprise Group ("PSEG Companies")	No	This is a very useful document and provides a good source of additional information; there are some cases where it could be interpreted as a standard requirement that can lead to confusion if conflicts exist. For example, the group by monitoring level example V.1.A shown on page 29 describes a level 2 partial monitoring as circuits alerting a 24Hr staffed operations center, page 38 shows level 2 monitoring as detected issues are reported daily. The actual standard table 1b level 2 monitor describes alarms are automatically provided daily to a location where action can be taken for alarmed failures within 1 day or less. This is listed as a supplemental reference document in the standard. The FAQ document "supports" the standard but is or is not an official interpretation tool, or if it is state as such.
Response: Thank you for your comments. The FAQ provides supporting discussion, but is not part of the Standard. The SDT intends that it be posted as a reference document, accompanying the Standard. As established in SDT Guidelines, the Standard is to be a terse statement of requirements, etc., and is not to include explanatory information like that included in the FAQ.		
The United Illuminating Company	No	What actions are taken if the owner can not perform a specific activity elaborated on the tables due to the design of the equipment? Is the owner in non-compliance? Must the owner only accept equipment solutions that allow the maintenance activities elaborated in the standard to be performed?

Organization	Yes or No	Question 6 Comment
Response: Thank you for your comments. The SDT is not aware of any activities that cannot be performed as you cite.		
JEA	No	Yes the FAQ is also a very important document to be approved along with the standard. There must be a way to have the standard and the FAQ go hand-in-hand or the standard must be revised to include much of the FAQ.
Response: Thank you for your comments. The FAQ provides supporting discussion, but is not part of the Standard. The SDT intends that it be posted as a reference document, accompanying the Standard. As established in SDT Guidelines, the Standard is to be a terse statement of requirements, etc., and is not to include explanatory information like that included in the Supplementary Reference and the FAQ. The FAQ and the Supplementary Reference documents have been revised to make them consistent with the new version of PRC-005-2. The Standards Committee has a formal process for determining whether to authorize posting a reference document with an approved standard. That process is posted on the Standard Resources web page – here is a link to the procedure: http://www.nerc.com/files/SC_Process_Approve_Supporting_References_Approved_10Mar08.pdf		
American Electric Power	Yes	
Arizona Public Service Company	Yes	
Black Hills Power	Yes	
Duke Energy	Yes	
Dynegy Inc.	Yes	

Organization	Yes or No	Question 6 Comment
Entergy Services	Yes	
Exelon	Yes	
Great River Energy	Yes	
Hydro One Networks	Yes	
Long Island Power Authority	Yes	
Manitoba Hydro	Yes	
MidAmerican Energy Company	Yes	
NERC Staff	Yes	
Northeast Power Coordinating Council	Yes	
Pacific Northwest Small Public Power Utility Comment Group	Yes	
PacifiCorp	Yes	
PNGC Power	Yes	

Organization	Yes or No	Question 6 Comment
ReliabilityFirst Corp.	Yes	
Southern Company Transmission	Yes	
Springfield Utility Board	Yes	
The Detroit Edison Company	Yes	
We Energies	Yes	
Y-W Electric Association, Inc.	Yes	
Ameren	Yes	1) Is this document considered part of the standard? We expect to use it as a reference in developing our PSMP, during audits, and for self-certification as an authentic source of information. It is also unclear how this document will be controlled (i.e. Revised and Approved, if at all). 2) The FAQ needs to be aligned with the tables. The FAQ also contains a duplicate decision tree chart for DC Supply. The FAQ contains a note on the Decision tree that reads, "Note: Physical inspection of the battery is required regardless of level of monitoring used", this statement should be placed on the table itself, and should include the word quarterly to define the inspection period. 3) We appreciate the SDT providing this valuable reference.

Response: Response: Thank you for your comments.

1. The FAQ provides supporting discussion, but is not part of the Standard. The SDT intends that it be posted as a reference document,

Organization	Yes or No	Question 6 Comment
accompanying the Standard. As established in SDT Guidelines, the Standard is to be a terse statement of requirements, etc., and is not to include explanatory information like that included in the Supplementary Reference and the FAQ. The FAQ and the Supplementary Reference documents have been revised to make them consistent with the new version of PRC-005-2. The Standards Committee has a formal process for determining whether to authorize posting a reference document with an approved standard. That process is posted on the Standard Resources web page – here is a link to the procedure: http://www.nerc.com/files/SC_Process_Approve_Supporting_References_Approved_10Mar08.pdf 2. The FAQ has been revised to make it consistent with the new version of PRC-005-2. The decision trees were removed. 3. Thank you.		
Western Area Power Administration	Yes	Clarification 1) FAQ, page 36, Control Circuit Monitor Level Decision Tree: It's not clear if the note on Level 1 device operation is required for Level 3 monitoring.
Response: Thank you for your comments. The Standard and Tables have been extensively revised. The FAQ has been revised to make it consistent with the new version of PRC-005-2. The decision trees were removed from the FAQ.		
WECC	Yes	Compliance does agree with the clarity. The FAQ answers should be referenced specifically to the Standard and the Supplementary Reference to further understand those two documents. However, endorsement of the Standard should not imply endorsement of the FAQ and vice versa.
Response: Thank you for your comments.		
FirstEnergy	Yes	We support the FAQ document and appreciate the SDT's hard work developing this document. The reference document should be linked in Section F of the standard. Otherwise it may be difficult for someone to navigate the NERC website in search of the document.
4. **Response:** Thank you for your comments. The Standards Committee has a formal process for determining whether to authorize		

Organization	Yes or No	Question 6 Comment
		posting a reference document with an approved standard. That process is posted on the Standard Resources web page – here is a link to the procedure: http://www.nerc.com/files/SC_Process_Approve_Supporting_References_Approved_10Mar08.pdf If approved as a permanent reference to a standard, then on the "Reliability Standard" web page, there will be a link (in the same cell as the link to the standard and its archive) to any reference documents approved for posting with the standard.

7. If you have any other comments on this Standard that you have not already provided in response to the prior questions, please provide them here.

Summary Consideration: Comments were offered on virtually every aspect of the draft Standard. Many of these comments resulted in changes to the Standard. The Tables were commented on heavily, and they were completely revised in response. Many commenters were concerned about not having provision for a "grace period," and the SDT responded that this was not allowable. "100% compliance" was also a concern, and the SDT responded that there was not a means of permitting some level of non-conformance without being also non-compliant.

Organization	Question 7 Comment
GDS Associates	Definition of Terms Used in the Standard. Protection System Maintenance Program 1. Monitoring. Concerned about the interpretation of this activity description 2. Upkeep. Not sure about how this activity will be enforced – A. Introduction. 4.2. Facilities. 3. The applicability does not address the current issues regarding radial + load serving only situation when Protection System not designed to provide protection for the BES. Standard should clearly state this exemption. B. Requirements. 4. 1.1. The standard does not provide guidance in how to identify the components of a transmission Protection System (tPS). See prior comment referring to the case of a radial load serving transmission topology. 5. 1.3. Requirement should read "For each identified Protection System component from Requirement 1, part 1.1, include all maintenance activities listed in PSMP and specified in Tables 1a, 1b, or 1c associated with the maintenance method used per

Organization	Question 7 Comment
	Requirement 1, part 1.2." 6. 1.4. This requirement should be eliminated since already included in Table 1a and covered through Requirement 1, part 1.3. 7. 4.3. Footnote 3 shall be eliminated since duplicates footnote 2 – C. Measures 8. M1. The added wording in the Protection System definition, requirements and measures with respect to the inclusion of the "associated circuitry from the voltage and current sensing devices" and control circuitry "through the trip coil(s) of the circuit breakers or other interrupting devices" seem right but a bit excessive under current circumstances (form of the standard). The standard should clearly specify how the maintenance program will address the verification, monitoring, etc. of the actual wiring and the trip coils. We suggest that the wording of the standard to reflect that the maintenance activities on the wiring will be conducted in a visual fashion without implying activities that require disconnecting the primary equipment. 9. We recommend to change the Protection System definition to read "up to the trip coils(s)" instead the word "through" (see comment on the definition as well). We consider that the gain in reliability by pursuing a thorough maintenance program that require to take primary equipment out of service (which in many instances will lead to the entire substation being put out of service) cannot counterweight the sole purpose of the standard and the economics emerging from this program.

Response: Thank you for your comments.

1. The SDT is unable to determine the nature of your concern. "Monitoring" is used within PRC-005-2 only as discussed in the new Table 2.
2. The SDT has removed "Upkeep" from the PSMP definition in response to your comment.
3. This is an issue for your regional BES definition.

Organization	Question 7 Comment
4. The SDT has extensively revised Requirement R1 and its sub-requirements. 5. The SDT has extensively revised Requirement R1 and its sub-requirements. 6. The SDT has removed Requirement R1, part 1.4, in consideration of your comment. 7. The footnotes have been removed. 8. The SDT is not specifying the means of achieving requirements. This allows entities the flexibility to determine their own optimal methods. 9. The SDT considers that the electrical trip coils are an integral portion of the dc control circuit, and therefore must be exercised.	
Western Area Power Administration	1) Standard, Page 4, R 4.3: Is the utility free to define its own "acceptable limits"? 2) Standard, Page 4, R 4.3: Must the "acceptable limits" be stated in the PSMP? 3) Standard, Page 4, Footnotes 2 and 3 are the same. 4) Attachment A says we can go to a performance based program; does this apply to every part of the standard? In other words, does this apply to component testing, functional testing, etc., and do we define the intervals of the test. That is, do we determine how long we test the sample of at least 30 units that Attachment A discusses?
Response: Thank you for your comments. 1. As "acceptable limits" may vary with the specific application, the entity is expected to determine appropriate acceptable limits. 2. There is no requirement within the draft Standard for an entity to specify the acceptable limits within its own PSMP. 3. The footnotes have been removed. 4. The draft Standard allows entities to implement a performance-based program for all component types except batteries if they have appropriate populations. Attachment A specifies that the entity "Maintain the components in each segment according to the time-based maximum allowable intervals established in Tables 1-1through 1-5 until results of maintenance activities for the segment are available for a minimum of 30 individual components of the segment." After that period, the entity may shift to the performance-based program for the entire segment.	

Organization	Question 7 Comment
Ameren	1) We commend the SDT for developing a generally clear and well documented second draft. The SDT considered and adopted many industry comments from the first draft. It generally provides a well reasoned and balanced view of Protection System Maintenance, and good justification for its maximum intervals. Ameren generally agrees that this second draft will be beneficial to BES reliability, but several inconsistencies, unclear items, and a couple issues need to be addressed before we will be able to support it. 2) Facilities Section 4.2.1 "or designed to provide protection for the BES" needs to be clarified so that it incorporates the latest Project 2009-17 interpretation. The industry has deliberated and reached a conclusion that provides a meaningful and appropriate border for the transmission Protection System; this needs to be acknowledged in PRC-005-2 and carried forward. 3) We are concerned over R1.1, where all components must be identified, without a definition for the word component or the granularity specified. While the FAQ gives a definition, and allows for entity latitude in determining the granularity, the FAQ is not part of the standard. Certainly this could confuse an entity or an auditor and lead to much wasted work and / or violations for unintended or insignificant issues. We suggest that the FAQ definitions be included within the standard. 4) Implementation of the PSMP must coincide with the beginning of a calendar year. 5) Generating Plant system-connected Station Service transformers should not be included as a Facility because they are serving load. Omit 4.2.5.5 from the standard. There is no difference between a station service transformer and a transformer serving load on the distribution system. This has no impact on the BES, which is defined as the system greater than 100 kV. 6) The term "maintenance correctable issue" used in Requirement 4 seems to be at odds with the definition given for it. It seems that an issue that cannot be resolved by repair or calibration during the maintenance activity would be a maintenance non-correctable issue. Also, in Requirement 4, the term "identification of the resolution" is ambiguous. Suggested changes for Requirements 4 and 4.1 are: "R4. Each Transmission Owner, Generator Owner, and Distribution Provider shall implement its PSMP, and resolve any performance problems as follows: 4.3 Ensure either that the components are within acceptable parameters at the conclusion of the maintenance activities or initiate actions to replace the component or restore its performance to within acceptable parameters."

Organization	Question 7 Comment
Response: Thank you for your comments. 1. Thank you. 2. When the interpretation (Project 2009-17) is approved, the SDT for PRC-005-2 will consider if the interpretation is appropriate for PRC-005-2 and make associated changes. 3. Requirement R1 has been extensively revised, and the SDT has added a definition of "Component" and "Component Type" to the draft Standard. The SDT's intent is that this definition will be used only in PRC-005-2, and thus will remain with the Standard when approved, rather than being relocated to the Glossary of Terms. 4. The SDT Guidelines, which were endorsed by the NERC Standards Committee in April 2009, establishes that proposed effective dates "must be the first day of the first calendar quarter after entities are expected to be compliant." The Implementation Plan is in accordance with these guidelines. 5. The "load" being served by the station service transformer may be essential to operation of the generating plant, and therefore is not the same as general distribution system load. Therefore, the SDT believes that these system components must remain within the Applicability section of the Standard. 6. The definition of "maintenance correctable issue" is consistent with the way it is used within the Standard.	
PPL Supply	1. For applicability to generators, the responsibility for a maintenance program will usually rest with the plant operator when the operator and plant owner(s) are different entities. Consider changing the applicability as it applies to the generator in such situations. 2. Time-based frequency should allow for flexibility; i.e. engineering analysis should allow the entity to exceed the intervals noted in the table. An engineering evaluation that defines a test interval differently than those intervals prescribed in the table should allow an entity to build a program with different intervals. 3. A Grace Period should be defined. This allows a tolerance window to allow for unforeseen occurrences. A grace period would allow for some schedule flexibility and reduce the number of reports to the regulator for exceeding an interval by a reasonable about. 4. The implementation plan for this revision should take into account that a generator outage may be

Organization	Question 7 Comment
	required to implement a new maintenance frequency. The implementation plan should account for outage time, especially nuclear plants that have extended operating cycles. 5. Table 1b Protective Relays Level 2 Monitoring Attributes includes input voltage or current waveform sampling three or more times per power cycle. No further guidance is provided in the reference documents. If this sampling rate is not provided in the specification by the manufacturer, what can the entity use to demonstrate that the attribute is satisfied? Please provide additional guidance. 6. Consider numbering the tables to improve cross-referencing the entries in program documentation. This will allow entities to reference in program documents exactly which activities are being implemented in accordance with the standard. 7. Requirement 1.1 states, "Identify all Protection System components." This is too broad and must be clarified.

Response: Thank you for your concern.

1. The Generator Owner, as defined within V5 of the NERC Functional Model, includes, "Design and authorize maintenance of generation plant protective relaying systems…" No maintenance activities are assigned to the Generation Operator within the Functional Model.
2. Requirement R3 and Attachment A provide the framework and requirements to develop and implement a performance-based maintenance program as you suggest.
3. "Grace periods" within the Standard are not measurable, and would probably lead to persistently increasing intervals. However, an entity may establish an internal program with grace-period allowance, as long as the entire program (including grace periods) does not exceed the intervals within the Standard.
4. The Implementation Plan has been revised in consideration of your comment.
5. This attribute is only relevant to microprocessor-based relays; no other technology possesses this attribute. The entity should contact the manufacturer to obtain this information.
6. The Tables have been completely revised in consideration of your comment.
7. Requirement 1, part 1.1 has been modified to state, "Address all Protection System component types."

Organization	Question 7 Comment
Consumers Energy Company	In the Standard, Footnote 2 and Footnote 3 are identical. We presume that some information has been omitted. We do not agree that Footnotes are an appropriate method of providing information that is important to the application of the Standard. Important information should be provided within the standard text.
Response: Thank you for your comments. The footnotes have been removed.	
Nebraska Public Power District	1. 4.2.5.1 (And elsewhere in the standard) Please define auxiliary tripping relays. 2. 4.2.5.5 Do station "system connected" service transformers that do not supply house load for the generating unit, other than during start up or emergency conditions, fall under this clause? If so, can these transformers be eliminated if the house load can be back-fed from "generator connected" service transformer switchgear? What if there are redundant "system connected" feeds? 3. R1 1.4 Clarification requested. This wording would suggest all battery activities fall under Table 1.a. exclusively. 4. R4 4.3 Does initiation of activities require documentation, or is inclusion of "initiation" in the testing procedure sufficient evidence? 5. Tables 1b &1c: Suggestion: If at all possible, combine and simplify. The number of sub clauses and nuances that are being described in these sections (with little change to interval or procedures for that matter) is overwhelming. These two tables are setting RE's and System Owners up for making errors. Implementation and auditability should be the focus of this standard, SIMPLIFY. 6. SPS - Does the output signal need to be verified, or does the actual expected action need to be verified. Actual expected action would affect electrical generation production for NPPD's SPS.
Response: Thank you for your comments. 1. Please see FAQ II.4.C, II.4.D, II.4.E, II.4.F, II.4.G, and Sections 2.4 and 15.3 of the Supplementary Reference document for discussion regarding auxiliary relays. 2. The "load" being served by the station service transformer may be essential to operation of the generating plant, and therefore is not	

Organization	Question 7 Comment
the same as general distribution system load. Therefore, the SDT believes that these system components must remain within the Applicability section of the Standard. This is not affected by redundancy. 3. The Tables have been completely revised in consideration of your comment. Please see the new Table 1-4 for these activities. 4. As indicated in Measure M4, the SDT believes that documentation such as work orders, etc., is necessary. 5. The Tables have been completely revised. **6.** The draft Standard requires that the expected action is verified. This may be conducted in overlapping segments, and a simulation may be sufficient to verify in some cases.	
CenterPoint Energy	CenterPoint Energy believes the proposed Standard is overly prescriptive and too complex to be practically implemented. An entity making a good faith effort to comply will have to navigate through the complexities and nuances, as illustrated by the extensive set of documents the SDT has provided in an attempt to explain all the requirements and nuances. The need for an extensive "Supplementary Reference Document" and an extensive "Frequently Asked Questions Document", in addition to 13 pages of tables and an attachment in the standard itself, illustrate that the proposal is too prescriptive and complex for most entities to practically implement. CenterPoint Energy is opposed to approving a standard that imposes unnecessary burden and reliability risk by imposing an overly prescriptive approach that in many cases would "fix" non-existent problems. To clarify this point, CenterPoint Energy is not asserting that maintenance problems do not exist. However, requiring all entities to modify their practices to conform to the inflexible approach embodied in this proposal, regardless of how existing practices are working, is not an appropriate solution. Among other things, requiring entities to modify practices that are working well to conform to the rigid requirements proposed herein carries the downside risk that the revised practices, made solely to comply with the rigid requirements, degrade reliability.
Response: Thank you for your comments. The SDT has extensively revised the Tables and the Standard in efforts to simplify and remove complexity. FERC Order 693 and the approved SAR for this project directed the SDT to establish both maximum maintenance intervals and minimum maintenance activities within the revised Standard.	
BGE	1. Comment 7.1. The standard, FAQs, and supplementary reference all make references to upkeep

Organization	Question 7 Comment
	and include in "upkeep" changes associated with manufacturer's service advisories. The FAQs include statements that the entity should assure the relay continues to function after implementation of firmware changes. This statement is uncontestable as general principle but is problematic in its inclusion in an enforceable standard because there is no elaboration on what the standard expects, if anything, as demonstration of an entity's execution of this responsibility. PRC-005-2 appropriately focuses on implementation of time-based, condition based, or performance based PSMPs; but addressing service advisories does not fit well with any of these ongoing preventive maintenance activities. It is instead episodic, more like commissioning after upgrades, or corrective maintenance work generated by condition-based alarms or anomalies discovered by analyzing operations. The standard appropriately steers clear of imposing requirements for these latter responsibilities as long as execution of an ongoing maintenance program is being demonstrated. BGE recommends that implied inclusion of service advisories should be removed from the standard and supporting documents. 2. Comment 7.2 R1.1 Requires the identification of all protection systems components. But it provides no elaboration on the level of granularity expected or acceptable means of identification. It is unlikely that the SDT expected the unique identification of every discrete component down to individual test switches or dc fuses. In the case of current transformers, several of which, or even dozens of which may be connected to a single relay there is no apparent reliability benefit that comes from indentifying them uniquely so long as it is proven that a protection system is receiving accurate current signals from the aggregate connection. (It may be argued that the revised definition of "protection systems" eliminates the need to include CT's under R1.1 but that's just one interpretation.) Some discrete components of communication systems may exist in an environment that is not owned by or known to the protection system owner. Additionally all protection system components may be indentified in documents that are current and maintained but not in the form of a specific searchable list that is limited to components that are within the scope of PRC-005. Examples may be indexed engineering drawings that indentify relays and other components for each protection systems or scanned relay setting and calibration documents that are current but not attached to searchable metadata. It is unclear whether or not these would be considered acceptable identification meeting R1.1. If they are not then the implementation plan for R1 is in all probability unachievable. BGE requests that the SDT provide more elaboration on R1.1 in the standard and in

Organization	Question 7 Comment
	the supporting documents. 3. Comment 7.3 For clarity footnote 1 to R1 which excludes devices that sense non-electrical signals should explicitly say that the auxiliary relays, lockout relays and other control circuitry components associated with such devices are included. The matter is well-addressed in the FAQ's but could easily be misunderstood if not included here.
Response: Thank you for your comments. 1. "Upkeep" has been removed from the definition of Protection System Maintenance Program, and from the Supplementary Reference and FAQ documents. 2. Requirement R1, part 1.1, has been revised to state, "Address all Protection System component types." 3. The SDT believes that these components are clearly included within the scope of dc control circuits.	
WECC	1. Compliance believes it will be difficult to demonstrate compliance when an entity chooses Condition Based Level 2 or Level 3 maintenance as the details of the requirements are still open to interpretation. The FAQ has answers to specific questions that are multiple choices. 2. Breaking down this standard into this level of granularity requires supplementary documents to understand it and for auditors to understand how to determine compliance. Industry standards are specific to equipment types and should be allowed to set intervals and maintenance tasks rather than a one-size fitting all approach.
Response: Thank you for your comments. 1. The Tables have been completely revised to clarify the monitoring attributes and related intervals and activities. 2. FERC Order 693 and the approved SAR for this project directed the SDT to establish both maximum maintenance intervals and minimum maintenance activities within the revised Standard.	
Constellation Power Generation	1. Constellation Power Generation does not agree with the changes to Voltage and Current Sensing inputs to protective relays in Table 1a. It is inferring that the only way to complete testing on these components to satisfy NERC is to complete online testing, which is dangerous and does not improve

Organization	Question 7 Comment
	the reliability of the BES. In fact, it can be argued that it decreases the reliability of the BES. The verbiage should be changed back to what was originally proposed to allow for offline testing. 2. Furthermore, Constellation Power Generation does not agree with several of the inclusions of generator Facilities in this standard. For example, in 4.2.5.1, the proposed standard looks to include any components that can trip the generator. At a nuclear facility, this could include protection of motors at the 4 kV level that may trip the generator due to NRC regulated safety issues. This should not fall under NERC jurisdiction. 3. The inclusion of station service transformers is another inclusion that should not be in this standard. There is no difference between a station service transformer and a transformer serving load on the distribution system. This has no impact on the BES, which is defined as the system greater than 100 kV. 4. Additionally, CPG has concerns regarding the vague language of R1.1, which requires the identification of all protection systems components. It provides no elaboration on the level of granularity expected or acceptable means of identification. It is unlikely that the SDT expected the unique identification of every discrete component down to individual test switches or dc fuses. In the case of current transformers, several of which, or even dozens of which may be connected to a single relay there is no apparent reliability benefit that comes from identifying them uniquely so long as it is proven that a protection system is receiving accurate current signals from the aggregate connection. (It may be argued that the revised definition of "protection stems" eliminates the need to include CT's under R1.1 but that's just one interpretation.) Some discrete components of communication systems may exist in an environment that is not owned by or known to the protection system owner. Additionally all protection system components may be identified in documents that are current and maintained but not in the form of a specific search-able list that is limited to components that are within the scope of PRC-005. Examples may be indexed engineering drawings that identify relays and other components for each protection systems or scanned relay setting and calibration documents that are current but not attached to search-able meta data. It is unclear whether or not these would be considered acceptable identification meeting R1.1. If they are not then the implementation plan for R1 is in all probability unachievable. 5. CPG requests that the SDT provide more elaboration on R1.1 in the standard and in the supporting

Organization	Question 7 Comment
	documents. In that vein, to clarify footnote 1 to R1 which excludes devices that sense non-electrical signals, it should explicitly say that the auxiliary relays, lockout relays and other control circuitry components associated with such devices are included. The matter is well-addressed in the FAQ's but could easily be misunderstood if not included here. 6. Lastly, Constellation Power Generation would like to voice concern over the expedited process in which this standard is being developed. Voting within a week of submitting comments does not leave enough time for the drafting team to thoroughly vet through the issues and identify much needed changes, let alone implement them.
Response: Thank you for your comments. 1. The intent of the cited section is to provide examples of how an entity might perform the testing. Any examples listed in either of the supporting documents should be looked upon as suggestions; these suggestions are not considered to be a complete list of the methods available. To the contrary, the Standard and the supporting documents were written considering that there are many ways to achieve a good test. Leeway is certainly available in how an entity complies with the Standard as the maintenance activities generally specify "what" must be achieved but not "how" an entity achieves it. Please see FAQ II.3.D. 2. FAQ III.2.A specifies that relays that trip breakers serving station auxiliary loads such as fans, pumps, and fuel handling equipment need not be included in the program even if loss of those loads could result in the tripping of the generator. 3. The "load" being served by the station service transformer may be essential to operation of the generating plant, and therefore is not the same as general distribution system load. Therefore, the SDT believes that these system components must remain within the Applicability section of the Standard. 4. Requirement R1, part 1.1, has been revised to state, "Address all Protection System component types." 5. Requirement R1, part 1.1, has been revised to state, "Address all Protection System component types." The SDT believes that the components associated with devices that sense non-electrical signals are clearly included within the scope of dc control circuits. 6. This Standard has been designated for an expedited process in order to achieve approval in the minimum time possible.	
Pepco Holdings, Inc. - Affiliates	Dates of the Supplemental Reference Documents in Section F of the standard need to be updated. 1. The word "calendar" is used widely to define month and year intervals. Sometimes causes

Organization	Question 7 Comment
	confusion, need definition/examples. 2. The level 2 table regarding Protection Station dc supply states that level 1 maintenance activities are to be used, but then goes on to give a list of Maintenance Activities that don't match those in level 1. Which activities shall we use? Same situation for Station DC Supply (battery is not used) where the 18 month interval is missing. 3. Req 1.1: "All Components" wording should say something like all components covered in our plan
Response: Thank you for your comments. 1. Section 8.4 of the Supplementary Reference document provides an example to assist in this determination. A "calendar year" is a single number year on the Gregorian calendar; a calendar month is any one of the twelve months within a single calendar year. 2. The Tables have been rearranged and considerably revised to improve clarity. Please see new Table 1-4. 3. Requirement R1, Part 1.1, has been revised to state, "Address all Protection System component types."	
SERC Protection and Control Sub-committee (PCS)	1. Descriptors in the "type of the protection system component" column need to be consistent between 1A, 1B and 1C. 2. Also, in the tables, please clarify "complete functional trip test" for UVLS and UVLS trip tests since the breaker is not being tripped. Facilities Section 4.2.1 "or designed to provide protection for the BES" needs to be clarified so that it incorporates the latest Project 2009-17 interpretation. The industry has deliberated and reached a conclusion that provides a meaningful and appropriate border for the transmission Protection System; this needs to be acknowledged in PRC-005-2 and carried forward. 3. We commend the SDT for developing such a clear and well documented second draft. The SDT considered and adopted many industry comments on the first draft. It generally provides a well reasoned and balanced view of Protection System Maintenance, and good justification for its maximum intervals. The SERC Protection & Control Subcommittee generally agrees that this second draft will be beneficial to BES reliability.

Organization	Question 7 Comment
Response: Thank you for your comments. 1. The Tables have been rearranged and considerably revised to improve clarity. 2. The Tables have been rearranged and considerably revised to improve clarity. Please see new Table 1-5. 3. Thank you for your comment.	
Dynegy Inc.	For protection system component verification, flexibility is needed subsequent to a system event to allow the analysis of a protection system operation to be utilized as a protection system component verification. We believe this flexibility is needed and should be incorporated in Requirement R4.
Response: Thank you for your comments. Operational results, if desired by an entity, MAY be used to meet maintenance requirements to the degree that they verify, etc., the relevant performance. The entity must determine if their use is effective.	
MidAmerican Energy Company	1. From the compliance registry criteria for generator owner/operator and the language in 4.2.5.3 it is implied that the intent is that protection systems for individual generators less than 20 MVA would not be covered by PRC-005. To make this clear in the PRC-005-2 standard, the following footnote to section 4.2.5.3 is recommended: Protection systems for individual generating units rated at less than 20 MVA in aggregated generation facilities are not included within the scope of this standard. The Request for Interpretation of a Reliability Standard submitted March 25, 2009 indicates that a protection system is only subject to the NERC standards if the protection system interrupts the BES and is in place to protect the BES. The following changes are recommended to clarify this in the standard: A.3. Purpose: To ensure all transmission and generation Protection Systems protecting and affecting the reliability of the Bulk Electric System (BES) are maintained. A.4.2.1. Protection Systems applied on, or and designed to provide protection for the BES.B.R1. Each Transmission Owner, Generator Owner, and Distribution Provider shall establish a PSMP for its Protection Systems that use measurements of voltage, current, frequency and/or phase angle to determine anomalies and to trip a portion of the BES and that are applied on, or and are designed to

Organization	Question 7 Comment
	provide..... 2. FERC Order 693 includes the directive that "testing of a protection system must be carried out within a maximum allowable interval that is appropriate to the type of the protection system and its impact on the reliability of the Bulk-Power System". If unanticipated conditions (e.g. force majeure) of the bulk-power system do not allow outages to complete protection system maintenance as required by the standard without compromising the reliability of the system delay of the particular maintenance activity should be allowed. This provision should be included in the standard in R4.
Response: Thank you for your comments. 1. This is an issue for your regional BES definition. The SDT has drafted the Standard to apply to all NERC entities with due regard for the applicable BES definition. 2. "Grace periods" within the Standard are not measurable, and would probably lead to persistently increasing intervals. However, an entity may establish an internal program with grace-period allowance, as long as the entire program (including grace periods) does not exceed the intervals within the Standard.	
Southern Company Transmission	1. General FAQ1) Attached is an elementary drawing showing a typical transmission line relay protection scheme utilizing SEL-351S and SEL-321 microprocessor relays. Does this qualify as partially monitored control circuitry? See pdf file Control Elementary_1-07-13 & Control Elementary_2-07-13in email documentation sent to Al McMeekin. If not, and this is an unmonitored circuit, what would be the appropriate maintenance interval (6 years or 12 years) for the Control and Trip Circuits from page 9 of PRC-005-2? The description of the two choices is ambiguous See pdf file PRC-005-2_clean_2 010June8.pdf in email documentation sent to Al McMeekin. If not, what would it take to make this circuit partially monitored (including inputs)? 2) Table 1a, page 9, row 2 (Voltage and Current Sensing Inputs) Question - Does this mean secondary quantities from CT's and VT's only? If so, please consider changing the wording from "Voltage and Current Sensing Inputs" to "CT and VT secondary quantities". 3) Table 1a, page 9, row 3 (Control and trip circuits with EM contacts)Question - Does "electromechanical trip or auxiliary contacts" mean EM protective relay outputs and EM tripping/lockout tripping contacts only? Or does it also include any part of the trip circuitry such as

Organization	Question 7 Comment
	cutout switch contacts and breaker trip coils plus associated aux. breaker contacts. For example, the schematic with a microprocessor relay described in the first bulleted item could be considered an unmonitored EM control circuitry (6 year interval). Is this because of the mechanical breaker aux contacts, breaker maintenance switch, and FT-1 test switch? If so, how could any control circuitry fall in the solid state trip contacts category (12 year interval)? 4) Table 1a, page 9, rows 3, 4, 5, 6 - Please consider rewording these to make it clear where control schemes with MP relays that do have trip coil / circuit monitors but don't meet the Partially Monitored requirements fit. (Does this type scheme fit in the 6 year trip test category or the 12 year category?) 5) Table 1a, page 12, row 1 - The maintenance requirements are not the latest wording used for all other Protective Relays. Please consider changing for consistency. 6) Table 1b, page 13, row 1 (Protective Relays) - Line three of the maintenance activities requires us to check inputs and outputs. The last maintenance item is to verify correct operation of output actions that are used for tripping. Question - How is this different than the line three maintenance requirements to check inputs and "outputs"? 7) Table 1b, page 14, rows 1 and 2 - Consider combining these into one row. The maintenance intervals and maintenance activities are these same. Please specify what is required for UFLS and UVLS control schemes). 8) Table 1b, page 14, rows 1 - The first sentence is very general for a monitoring attribute. ("Monitoring of Protection System component inputs, outputs, and connections with reporting of monitoring alarms to a location where action can be taken.") Consider deleting this row or make it more specific. 9) Table 1b, page 14, row 2 [Control Circuitry (Trip Circuits) (except for UFLS/UVLS)]Question: Should there be a 12 year functional trip test requirement for this partially monitored control circuitry? Should this be added to Table 1b? 10) Table 1b, page 14, row 1 [Control Circuitry (Trip Circuits) (except for UFLS/UVLS)] - It states Monitoring of Protection System component inputs, outputs, and connections ... Question - what does "inputs" mean? There are Protection System components such as protective relays, control circuitry, station dc supply, associated communications systems, etc. Does this mean we must monitor inputs to any or all of these Protection System components? How would this be

Organization	Question 7 Comment
	accomplished? 11) Table 1c, page 18, row 4 - Should there still be a requirement to trip breakers by all trip coils every 6 years? Supplementary Reference Document 12) Question on Figure 1, page 27 - Box 1 denoting Protection Relays includes Aux devices, Test or Blocking Switches. The Aux devices Test or Blocking Switches should be part of Box 3 (Control Circuitry). Please correct or note accordingly. FAQ Document 13) On Page 30, please add an Example with Partially Monitored (Level 2) Control Circuit. 14) On the Control Circuit Decision Tree on page 36, the flow chart does not match the current Table 1 requirements. They match the previous version which is described in the first question of this document. We still propose leaving the flow chart on page 36 as is and change Table 1 to match the original requirements. 15) Please consider adding a diagram /elementary drawing of a Partially Monitored Control Circuit showing the trip output contacts, inputs, etc that must be monitored to meet the Monitoring Attributes / Requirements. A diagram showing an Unmonitored control scheme and what it would take to make it Partially Monitored would be helpful too. Additional General FAQ 16) PRC-005-2, R1 requires the Functional Entity to establish a Protection System Maintenance Program (PSMP). It is not clear if this standard establishes a specified frequency for reviewing and updating the PSMP itself or the PSMP criteria outlined in subparts 1.1 through 1.4. By comparison, EOP-005-1 System Restoration Plans, requires the Functional Entity to (a) have a restoration plan and (b) to review and update the restoration plan annually (see EOP-005-1, R1 and R2). This approach to a comprehensive and periodic review considers the PSMP as a whole and is independent of the specific maintenance methods (time-based, condition-based, or performance-based) and maintenance intervals for those respective methods. It is noted however that PRC-005 Attachment A mentions annual updates to the list of Protection System component. According to the

Organization	Question 7 Comment
	Attachment's subtitle, Criteria for a Performance-Based Protection System Maintenance Program, this annual update seems limited to performance-based maintenance and not inclusive of other maintenance methods. The recommendation is to evaluate the need for a periodic review of the PSMP as a whole. 17) R1, Criteria 1.1, and companion VSL. This Criterion requires the identification of all Protection System components. The VSL for R1 uses a percent-based approach to parse out different quantities of components across the four VSL categories. This implies that a Functional Entity must have the ability to put a numerical quantity on its various components and should be able to demonstrate within certain tolerances that its components are included (or counted). If the number of components within scope amount to hundreds or thousands of individual items, the PSMT SDT should consider the Functional Entities' ability to track and quantify the items for a compliance demonstration. If an entity is not able to reasonably quantify which components are in scope, demonstrating compliance on a percent-basis may prove difficult or impossible. Further review may indicate the need to reformat the VSL. Similar concerns are noted in other VSLs (R2, R3, and R4) and in Attachment A where percentage-of-components are mentioned. 18) R4 essentially requires the Functional Entity to implement its PSMP. R4 takes care to highlight the specific task of "identification of the resolution of all maintenance correctable issues." It is noted that other "identification tasks" are included as criterion for the PSMP in R1. If these tasks are all appropriately categorized as identification-type tasks, it may be more efficient to restructure the standard by incorporating this task into R1 with the other criteria. R4 could remain as a basic implementation requirement with more detail provided in subparts 4.1, 4.2, and 4.3. 19) Footnote No. 2 describes maintenance correctable issues and could be interpreted as a potential new term for inclusion in NERC's Glossary of Terms. The PSMT SDT should conduct further review of this terminology as a potential new Glossary term. 20) At R4, subpart 4.3, insert "design" such that it reads as follows: "Ensure that the components are within acceptable design parameters at the..." Also, this subpart duplicates Footnote No. 3 which describes "maintenance correctable issues" and was established in the main requirement R4 at Footnote No. 2.

Organization	Question 7 Comment
Response: Thank you for your comments. 1. The Tables have been rearranged and considerably revised to improve clarity. Please see new Table 1-5. 2. This portion of the definition of Protection System has been revised. Also, the Tables have been rearranged and considerably revised to improve clarity. Please see new Table 1-3. 3. The Tables have been rearranged and considerably revised to improve clarity. Please see new Table 1-5. 4. The Tables have been rearranged and considerably revised to improve clarity. Please see new Table 1-5. 5. The Tables have been rearranged and considerably revised to improve clarity. 6. The Tables have been rearranged and considerably revised to improve clarity. Please see new Table 1-5. 7. The Tables have been rearranged and considerably revised to improve clarity. 8. The Tables have been rearranged and considerably revised to improve clarity. 9. The Tables have been rearranged and considerably revised to improve clarity. Please see new Table 1-5. 10. Some examples of input may include, but are not limited to: breaker fail initiate, start timer. This cannot be an all-inclusive list as any given scheme could have many variations. In short, if your scheme requires a specific input to function properly then you must have that input maintained; if your scheme has a specific output that must function then it must be maintained. If the input or output is used for a non-protective function (such as, but not limited to, Sequence-of-Events Recorder, alarm or indication) then it does not have to be maintained under this Standard. See Section 15.3 of the Supplementary Reference and FAQ II.2.L. 11. Yes. 12. The diagram is for illustrative purposes only, and is intended to demonstrate all devices which need to be included within a PSMP. Box 1 shows the cited devices as being within the relay panel, and makes no distinction regarding what specific type of Protection System component is being addressed. The preceding Table has been revised to avoid this conclusion. 13. The Tables have been revised to remove descriptions of various levels of monitoring. 14. The decision trees have been removed. 15. The Tables have been revised to remove descriptions of various levels of monitoring.	

Organization	Question 7 Comment
16. The expectation is that an entity's PSMP will be current. No periodicity is provided. However, in Attachment A, the performance-based program necessarily requires an ongoing review of the program to assure that it is still relevant. 17. Requirement R1, part 1.1, has been revised to state, "Address all Protection System component types." 18. The SDT believes that the identification of maintenance-correctable issues is properly an issue for implementation of the PSMP, not establishment of the PSMP. 19. The referenced footnote has been removed and a new definition established for this Standard only. 20. The SDT disagrees. The acceptable parameters for a specific application may not be identical to the design parameters for the component.	
FirstEnergy	Implementation Plan a. We do not support the 3 month implementation timeframe for Requirement 1. For many entities, it will take some time to develop a sound PSMP that meets the new PRC-005-2 standard. We suggest a 12 month implementation which we believe is more logical and in alignment with the implementation timeframe for Protection System Components with maximum allowable intervals of less than 1 year, as established in Table 1a. b. Although we support the implementation timeframes for Requirements R2, R3, and R4, we do not support the required periodic percentages of protections systems to be completed. There could be numerous reasons where an entity has to adjust its program schedule which could lead to noncompliance with these percentage milestones. We suggest simply requiring 100% completion of the maintenance per the maximum maintenance intervals. Alternatively an entity should have the flexibility to indicate they have fully transitioned to the new standard during the early stages of the implementation plan if their existing maintenance practices meet or exceed the standards minimum expectations. Doing so should negate the need to produce the "% complete" implementation status.
Response: Thank you for your comments. a. The Implementation Plan has been modified in consideration of your comment. b. The SDT disagrees and feels that a "phased" Implementation Plan is appropriate. The Implementation Plan has been revised to	

Organization	Question 7 Comment
clarify that the percentages are minimums, not absolute.	
American Transmission Company	1. It is appreciated that the SDT is attempting to provide options for maintenance and testing programs. Practically speaking, it will be difficult to perform any type of program outside of Time-Based Maintenance (TBM). Too many circuits are a mix of technology. For example, a line may have microprocessor relays for detecting and tripping line faults, but the bus differential lockout could also trip the line breaker. One may be partially monitored and the other unmonitored. It will force the utility to perform maintenance at the shorter of the maintenance cycles. Additional time and cost will be required to organize and switch out the applicable equipment for the outage, approximately doubling the cost associated with performing these trip tests. When entities are required to maintain tens of thousands of these devices, the simplest approach will be to revert to TBM. ATC does not support the existing 2nd Draft of PRC-005-2 Standard because it is our opinion that: o There is a high probability that system reliability will be reduced with this revised standard. o The number of unplanned outages due to human error will increase considerably. o Availability of the BES will be reduced due to an increased need to schedule planned outages for test purposes (to avoid unplanned outages due to human error). o To implement this standard, an entity will need to hire additional skilled resources that are not readily available. (May require adjustments to the implementation timeline.) o The cost of implementing the revised standard will approximately double our existing cost to perform this work. 2. ATC requests that relevant reliability performance data (based on actual data and/or lessons learned from past operating incidents, Criteria for Approving Reliability Standards per FERC Order 672) be provided to justify the additional cost and reliability risks associated with functional testing. 3. Under a Performance-Based Program, what happens if the population of components drops below 60 (as all will eventually)? Is there an implementation period to default to TBM? 4. Are the internal relays and timers associated with a circuit breaker included as part of the protection scheme? In the Independent Pole Operation breakers (IPO), there are various internal schemes built to protect for pole discordance (one pole open, two closed, event measured over time frame

Organization	Question 7 Comment
	(milliseconds)), these schemes may re-trip the breaker, initiate breaker failure protection or trip a bus lock out relay. In DC control schemes fuses and panel circuit breakers protect for wiring faults. Do these devices need to be tested? Is there an obligation to test the distribution circuit breakers for correct operation points? Is there an obligation to replace fuses after a defined time period?
Response: Thank you for your comments. 1. The Tables have been rearranged and considerably revised to improve clarity. Please see the new Tables. 2. The Standard does not preclude an entity from largely utilizing other methods of verification, although functional testing may be the easiest to achieve. 3. The entity must revert to TBM if the population falls below 60. There is no implementation period; the SDT believes that the annual PBM review will alert the entity that the population is nearing 60, and allow the entity to react to the diminishing component population accordingly. 4. Only those control circuit components necessary for proper Protection System operation are included. As noted, many breakers have numerous other internal auxiliary functions (gas pressure, etc.) that are not relevant. A purely-functional test may address many of the issues cited. There is no obligation to test either distribution circuit breakers or dc panel fuses.	
NERC Staff	NERC staff is pleased with the current iteration of this standard. The staff understands that while PRC-005-2 has historically been the most frequently violated standard, it has mostly been due to documentation issues. The standard has not been much of a heavy hitter in causal or contributive aspects, and with respect to relay operations, there have been very few times that lack of maintenance has been the problem. 1. NERC staff does propose a slight change to 4.2.5.1. The concern is that 4.2.5.1 could be interpreted to apply to devices that protect the generator as opposed to those that protect the Bulk Electric System. The suggested language is as follows: “Protection System components that act to trip generators that are part of the BES, either directly or via generator lockout or auxiliary tripping relays.” 2. Additionally, staff suggests some changes to R1. In that requirement, the PSMP covers “Protection Systems that use measurements of voltage, current, frequency and/or phase angle to determine

Organization	Question 7 Comment
	anomalies and to trip a portion of the BES...” It probably would be better if the list was limited to voltage and current or if the list was replaced with electrical quantities. The former would be okay since voltage and current are the only two electrical quantities that relays measure directly. To remove ambiguity, the most inclusive way to rephrase this is probably the latter alternative, to change the requirement to, “...that use measurements of electrical quantities to determine anomalies...” 3. Finally, Footnotes 2 and 3 (in Requirement 4) are identical. Unless that’s intentional, one should be removed. (And note that Footnote 2 is missing a period.)
Response: Thank you for your comments. 1. The essence of your suggestion is already addressed within 4.2.5 itself. 2. The definition of Protection System has been revised to address your suggestion. 3. The footnotes have been removed.	
MEAG Power	No comment.
Exelon	1. Nuclear generators are licensed to operate and regulated by the Nuclear Regulatory Commission (NRC). Each licensee operates in accordance with plant specific Technical Specifications (TS) issued by the NRC which are part of the stations’ Operating License. TS allow for a 25% grace period that may be applied to TS Surveillance Requirements. Referencing NRC issued NUREGs for Standard Issued Technical Specifications (NUREG-143 through NUREG-1434) Section 3.0, "Surveillance Requirement (SR) Applicability," SR 3.02 states the following: "The specified Frequency for each SR is met if the Surveillance is performed within 1.25 times the interval specified in the Frequency, as measured from the previous performance or as measured from the time a specified condition of the Frequency is met." The NRC Maintenance Rule (10 CFR 50.65) requires monitoring the effectiveness of maintenance to ensure reliable operation of equipment within the scope of the Rule. Adjustments are made to the PM (preventative maintenance) program based on equipment performance. The Maintenance Rule

Organization	Question 7 Comment
	program should provide an acceptable level of reliability and availability for equipment within its scope. The NRC has provided grace periods for certain maintenance and surveillance activities. Exelon strongly believes that SDT should consider providing this grace period to be in agreement and be consistent with the NRC methodology. Not providing this grace period will directly affect the existing nuclear station practices (i.e., how stations schedule and perform the maintenance activities) and may lead to confusion as implementing dual requirements is not the normal station process. Nuclear generating stations have refueling outage schedule windows of approximately 18 months or 24 months (based on reactor type). If for some reason the schedule window shifts by even a few days, an issue of potential non-compliance could occur for scheduled outage-required tasks. The possibility exists that a nuclear generator may be faced with a potential forced maintenance outage in order to maintain compliance with the proposed standard. For the requirements with a maximum allowable interval that vary from months to years (including 18 Months surveillance activities), the SDT should consider an allowance for NRC-licensed generating units to default to existing Operating License Technical Specification Surveillance Requirements if there is a maintenance interval that would force shutting down a unit prematurely or face non-compliance with a PRC-005 required interval. Therefore, at a minimum, maintenance intervals should include an allowance for any equipment specifically controlled within each licensee's plant specific Technical Specifications to implement existing Operating License requirements if such a conflict were to occur. 2. PECO would like to have the implementation plan provide at least 1 year for full implementation of the new standard. This will provide adequate time for development of documentation, training for all personnel, and testing then implementation of the new process(es).
Response: Thank you for your comments. 1. The SDT understands that nuclear power plants are licensed and regulated by the NRC, has a general understanding of the role that plant Technical Specifications (TS) and associated Surveillance Requirements (SR) in the facilities' operating licenses, and has tried to be sensitive to potential conflicts between PRC-005-2 and NRC requirements.	

Organization	Question 7 Comment
	The SDT believes that the majority of components making up the protection systems for in-scope generating facilities as discussed in Section 4.2.5 of the Standard would be considered balance of plant equipment and, therefore, not subject to NRC-issued TS and associated SR requirements. While availability of plant auxiliary sources to the plant's safety related equipment is addressed by TS and associated SR requirements, these documents are focused on the effects that the availability of these transformers have on reactor safety rather than specifying maintenance and testing requirements for the Protection Systems for these transformers. The SDT recognizes that some battery systems may serve as a source of DC power to both reactor safety systems and to Protection Systems discussed in Section 4.2.5. The SDT acknowledges that there might be plant TS and SR applicable to these batteries. However, the SDT believes that the 3-month and 18-month inspection requirements called for in PRC-005-2 would be no more onerous than plant TS requirements for routine online safety system battery inspections and, furthermore, would not necessitate a plant outage. The SDT recognizes that the PRC-005-2 requirement for validating battery design capability via battery capacity testing would require a plant outage. However, it is the opinion of the SDT that the maximum allowed battery capacity testing intervals of not to exceed 6 calendar years for vented lead acid or NiCad batteries (not to exceed 3 calendar years for VRLA batteries) could easily be integrated within the plant's routine 18-month to 2-year interval refueling outage schedule. The SDT believes that PRC-005-2 is complementary to the NRC Maintenance Rule in that PRC-005-2 requirements allow for the leveraging of the entire electrical power industry experience in establishing minimum maintenance activities and maximum allowed maintenance intervals necessary to ensure reliable Protection System performance. Please see Supplemental Reference Section 8.4 for further discussion for the SDT's rationale for exclusion of grace periods. Please see FAQ IV.2.C for further discussion of impact of PRC-005-2 testing requirements on power plant outage schedules. The challenge of integrating PRC-005-2 testing requirements with a plant's outage schedule is not unique to nuclear plants. Finally, the SDT notes that an entity may build grace periods into its own PSMP as long as the maximum allowed time intervals of PRC-005-2 are not exceeded. If an entity wishes to build a 25% grace period into its program, it may do so by setting its program maintenance and testing intervals at <80% of the PRC-005-2 maximum allowable time interval. 2. The Implementation Plan has been modified in consideration of your comments.
Hydro One Networks	1. Footnotes 2 and 3 on page 4 are identical. Delete footnote 3. 2. UFLS systems by design can suffer random failures to trip. It would make sense for a requirement to exist to perform maintenance on the UFLS relay as their failure to operate may affect numerous distribution level feeders. However maintenance on associated DC schemes connected to the

Organization	Question 7 Comment
	devices should only be done on the same frequency as maintenance on the relevant interrupting devices. Consideration should be given to exempting schemes that have a maintenance program in place on those distribution level devices from PRC-005 Standard-specified maintenance intervals. Such Standard-specified intervals could apply to interrupting devices that have no maintenance program in place.
Response: Thank you for your comments. 1. The footnotes have been removed. 2. The Tables have been rearranged and considerably revised to improve clarity, and many activities related to UFLS have been removed. Please see the new Tables.	
Progress Energy Carolinas	1. R1.1.1 states that "all" protection system components be identified. Does the term "all" refer to the major components identified in the Protection System definition (protective relays, communication systems, voltage and current sensing devices, station dc supply, and control circuitry) or does it include all sub-components (jumpers, fuses, and auxiliary relays used in dc control circuits and communication paths/wavetraps/tuners/filters)? We assume the former but request clarification. 2. Draft Implementation Plan for PRC-005-02: The phased implementation plan for R2, R3, and R4 seems reasonable. However, the three-month implementation plan for R1 seems extremely short. Utilities will have to change procedures, job plans, basis documents, provide training, and change intervals in their work tracking databases. In addition, if the utility wants to take advantage of the longer intervals allowed by partial monitoring, significant print work must be performed up front. 3. Descriptors in the type of the protection system column needs to be consistent between 1A, 1B and 1C. In the tables, please clarify "complete functional trip test" for UVLS and UVLS trip tests since the breaker is not being tripped.
Response: Thank you for your comments. 1. Requirement R1, Part 1.1, has been revised to state, "Address all Protection System component types." 2. This portion of the Implementation Plan has been revised to twelve months in consideration of your comment.	

Organization	Question 7 Comment
3. The Tables have been rearranged and considerably revised to improve clarity. Please see the new Tables.	
Manitoba Hydro	1. Once the new Standard is approved, NERC must allow for a greater implementation stage and no further changes proposed for the foreseeable future. It does take a lot of resources for a Utility to make the required changes in maintenance frequency templates or type of maintenance required as per the proposed "Standard". 2. Regarding the use of the term “Calendar” (i.e. end of calendar year) for maximum maintenance interval. Our utility uses end of fiscal year as our cutoff date for completing maintenance tasks for a given year. It would be considerable work for us to have to switch to end of calendar year with zero improvement in our overall reliability. We suggest it be left up to each utility to define their calendar yearly maintenance cycle when all tasks for that year must be completed.
Response: Thank you for your comments. 1. The implementation period for Requirement R1 has been extended from 3 months to 12 months in consideration of your comments. 2. With the vast array of entities subject to compliance monitoring, it would be very difficult for the ERO to assess compliance for varying “years.” Additionally, the SDT understands that most compliance monitors currently request data on a calendar year basis when assessing compliance.	
Grant County PUD	PRC005-02 Comment We offer some comment for your consideration for incorporation into the Standard PRC-005-02 (draft) as presented in the May 27th 2010 PRC 005-02 “Standard Development Roadmap.” RE: Comment on the 2nd Draft of the Standard for Protection System Maintenance and Testing” 1) The term “The Protection System Maintenance Program” (Page 2) appears to be centered on the concept of maintaining specific components as stand alone objects, and therefore infers that the resultant documentation be organized in a similar fashion. Neither is optimal from a practical or a functional perspective. Many rational work practices combine components (example, meggering from the relay input test switch through the cables and the CTs) in the interest of minimizing circuit intrusion and human error. For this reason, such maintenance practices are superior from a reliability standpoint. The emphasis on “components” in the current draft is, at best, tangential to NERC’s

Organization	Question 7 Comment
	stated goal and purpose of PRC-005 to improve reliability. How would we fix this? We would insert the phrase “or Element”-as defined in NERC’s Glossary of Terms to include “one or more components / devices with terminals that measures voltage, current, frequency and/or phase angle” to determine anomalies and to trip a portion of the BES” immediately after any occurrence of the word “component” in each of the Requirements or in a Definition paragraph, intending it to be applied globally to R-1 through R4. This would foster the validity of maintenance activities being applied to aggregations of components - “Elements”-such as would occur during Verification of DC control circuitry or through the employment of fault data analysis. 2) Protection System Maintenance Program. The categorization of maintenance into 7 maintenance activities is welcomed as advancing practices which foster BES reliability. Likewise we find the clarifications denoted by superscripts 1 and 2 helpful. However....under C: MEASURES: M1, the last sentence of the paragraph provides: “For each protection system component, the documentation shall include the type of maintenance program applied (time based, etc), maintenance activities (1 or more of the 7 identified) and maintenance intervals.....” This measure goes beyond the requirements of the standard and should be revised consistent with the deletion of the previous R.1.1 as shown in track changes under the version 2 draft which had included the identification of the maintenance activity associated with each component. COMMENT: It should be apparent in reviewing the evidence that one or more of the 7 listed activity categories are represented. The proscription to explicitly call out these categories is thus redundant---the requirement being that at least one has to be identifiable in the program-and will cause unnecessary complications to the Entity and interpretation issues in the Compliance monitoring effort. We recommend that the words “maintenance activities” be removed from the last sentence in the paragraph pertaining to C: MEASURES: M1.We also believe it is unnecessary to restate the definition of “Protection System” in the Measure. 3) A fundamental incompatibility exists between NERC’s proposition of “maximum maintenance (time based) interval” and the typical CMMS PM generation algorithm. SPCTF members and regional compliance engineers have verbally represented that the “maximum maintenance interval” is a precise term “not to exceed-even by one day---” maximum, otherwise generating a fine-able Violation and that fixed intervals plus or minus a certain additional period of time to account for other operational exigencies are no longer going to be permitted. There is always an interval between the

Organization	Question 7 Comment
	time a CMMS PM is issued and its completion. The time interval between the issue date and the completion date is normally a period of time to allow maintenance staff to schedule their work in an orderly fashion. The maximum time based interval is fixed by the time period specified for issuance of the planned maintenance (PM) work order (e.g. every 3 years) and the defined period of time to complete the work (usually described as a percentage of the PM interval e.g. 25%). So predicating a PM issue date based on the last issue date plus a percentage of the interval time to complete the work is not inconsistent with a fixed time interval. Under the proposed tables, however, there is no accommodation for this predominate maintenance practice. Even if maintenance intervals were shortened to ensure that the required completion date as defined by program intervals does not exceed the NERC maximum interval as described in the tables, this will not be sufficient because auditors may conclude that the tables permit the use of only a single defined interval and not permit an additional defined period of time to schedule and complete the work. Remember, it is immaterial whether the Entity's interval is more stringent than the NERC maximum, a violation may occur if the maintenance is not performed within the Entity's maintenance interval, even if it is shorter than the NERC maximum. A precise maximum interval requires constant managerial intervention on the part of the Entity to ensure that operational exigencies do not cause violations on a component-by component (or element) basis. The shortened interval would tend to destroy the sense of rhythm and pattern which should be manifest in a time based program. Further, after one or more iterations, seasonal restrictions on outages begin to impinge requiring adjustments to be made to the Maintenance Program document to adjust the interval or maintenance activity. At best, it results in a clumsy way of doing business and requiring significantly more oversight into keeping the maintenance program document updated for presentation to auditors rather than focusing on prudent maintenance activities as desired by FERC Order 693. Auditing is not any more difficult if the Maintenance Program also specifies that a percentage of a fixed target / time interval is allowed to schedule and complete the work-as meeting the interval requirements of a time based maintenance program. This method allows for a fixed time for issuance of the work order and maintenance personnel some flexibility to schedule and complete their work within a defined period of time. We recommend to vote against adoption until some more workable solution is identified and disseminated, satisfying both the Compliance Authority and the affected Entities. Specifically, we recommend that the drafting team adopt "target" intervals with a +/- range of

Organization	Question 7 Comment
	acceptability, based on percentage or a fixed time per interval, which can be global for the Program or specific to the elements or components in question. The target intervals must be stated in the PSMP, the range of acceptability easily calculable and enforceable, and within the maximum intervals to be identified in the tables 1a, b, and c, satisfying compliance issues. This also allows the Entities to rationally plan their maintenance using existing CMMS technologies. 4) Within the Violation Security levels, we are aware of no activity by NERC to differentiate the relative criticality of components or Elements of the BES system. For example, protection system components or Elements in a regional switchyard may present a larger potential for disruption of the BES in the event of a mis-operation than does one associated with one generator among fifteen others and which is more electrically remote from and of less consequence to the BES. Unless and until this issue is addressed, both the PRC-005 maintenance and documentation will be less effective and more expensive than it could be. 5) PRC-005-02's proposed effective date is "See Implementation Plan." This is not adequate to provide regulated entities with appropriate notice of the Effective Date of PRC-005-2 standard. " 6) Additionally, NERC has not posted the "Implementation Plan" for comment in the same manner as the proposed standard and thus we are not able to comment on the schedule provided in the Plan. We understand that the retention and documentation cycles go back three years and that a regulated entity, depending on the effective date of this standard and the entity's audit cycle, will be audited to both PRC-005-1 and PRC-005-2 during the same audit period. Some further discussion should be given to allowing comment on the Implementation Plan because of the potential overlapping requirements during a single audit cycle.

Response: Thank you for your comments.

1. The draft Standard supports a variety of methods of designing the PSMP.
2. A definition of "Component" and "Component Type" has been added to the draft Standard. The SDT's intent is that this definition will be used only in PRC-005-2, and thus will remain with the Standard when approved, rather than being relocated to the Glossary of Terms. The Requirements and Measures have been modified to use these terms in a consistent manner. These defintions will assist in addressing your concern.

Organization	Question 7 Comment
3. This comment seems to suggest that a "grace period" should be permitted. "Grace periods" within the Standard are not measurable, and would probably lead to persistently increasing intervals. However, an entity may establish an internal program with grace-period allowance, as long as the entire program (including grace periods) does not exceed the intervals within the Standard. 4. Thank you for your comment. The VRFs address the reliability impact of the Requirements, while the VSLs simply address "how bad did you miss it?" 5. The Implementation Plan for Requirement R1 has been revised from 3 months to 12 months to address this comment. 6. The Implementation Plan was posted for comment, with a question on the comment form during the first posting. The Implementation Plan was not substantially revised for the second posting. During the implementation period, there will be some overlap between PRC-005-1 and PRC-005-2. An unattractive alternative would be to minimize the implementation period for PRC-005-2.	
Xcel Energy	1. R1.1 "Identify all Protection System Components" - does this mean that the PSMP must contain a "list"? Please explain what this means. If it is a list, then essentially it will be a dynamic database, not necessarily a "program" as defined in the PSMP 2. R1.3 "include all maintenance activities..." seems to be an indirect way of indicating that the entities PSMP must comply with the tables. Tables - the components related to DC Supply and battery are confusing. It the battery is the specific component then state "battery". If the charger is the specific component, then state "charger". As currently written, one must sort through all of the different "Station DC Supply" line items to figure out what is required.- 3. In tables 1b and above, it is written "no level 2 monitoring attributes are defined - use level 1 maintenance activities" but then maintenance activities are listed that don't match with Level 1 maintenance activities. Please clarify what exactly needs to be done if using Table 1 b and above.
Response: Thank you for your comments. 1. Requirement R1, Part 1.1, has been revised to state, "Address all Protection System component types." 2. The Tables have been rearranged and considerably revised to improve clarity. Please see new Table 1-4.	

Organization	Question 7 Comment
3. The Tables have been rearranged and considerably revised to improve clarity.	
Northeast Utilities	1. R1.1 It is not clear what would constitute "all Protection System components". Suggest the addition of a definition for "Protection System components".R1.4 Suggest revise to read: "all batteries or dc sources" 2. Table 1a vented lead acid -- "Verify that the station battery can perform as designed by evaluating ..." -- Please define evaluating, including: a. What is the basis for the evaluation? b. Is 5% 10% 20% etc acceptable? c. Where does baseline come from for older batteries? 3. Request clarification of 2.3 Applicability of New Protection System Maintenance Standards from Supplementary Reference. Specifically, please clarify if a functional trip test is needed to be performed on the distribution circuit breakers to protect the Bulk Electric System (BES) if these low side breakers are not part of the transmission path. (A diagram identifying the applicable breakers would be helpful in the Supplementary Reference)
Response: Thank you for your comments. 1. Requirement R1, Part 1.1, has been revised to state, "Address all Protection System component types"..(a) The basis is related to the variation from the baseline. Please see FAQ II.5.G and II.5.F. (b) This is determined by the entity based on the application. (c) The baseline can be provided by the battery manufacturer or the test equipment OEMs. **2.** The Tables have been rearranged and considerably revised to improve clarity. Please see new Table 1-5.	
South Carolina Electric and Gas	R1.1 states "Identify all Protection System Components". To avoid confusion this should be clarified. It could be interpreted that discreet components must be individually identified. An example would be as individual aux relays used in the tripping path.
Response: Thank you for your comment. Requirement R1, Part 1.1, has been revised to state, "Address all Protection System component types".	

Organization	Question 7 Comment
PacifiCorp	1. R1.1: Please clarify what the requirements for "identify" means. Does each component need to be "identified" in our maintenance system, or at least referenced in the maintenance program or labeled in the field??? 2. R4.3: Please provide guidance on what will be required to prove compliance that "maintenance correctable issues" have been identified and corrective actions initiated. 3. What is the implication of finding maintenance correctable issues as it relates to other requirements for no single points of failure? In other words, if during maintenance a relay is found to have failed, is there an acceptable time period under which we may operate the system without redundancy until a repair can be made? Similarly, if part of a redundant relay system is taken out of service for maintenance, may the facility it was protecting be left in service? If not, then is the implication that protection systems must be triple redundant in order to do relay maintenance on in service equipment? Otherwise facilities would always have to be removed from service to do relay maintenance. 4. Section D / 1.3: The data retention requirement for the two most recent performances of each maintenance activity is excessive. The requirement should be limited to the most recent or all activities since the last on-site audit. At the worse case an entity would have to retain records for up to 35 years for maintenance performed on a 12 year cycle. 5. Table 1a "Protective Relay" entry: The last maintenance activity is listed as "for microprocessor relays verify acceptable measurement of power system input values " for which a 6 year interval is provided". How is this different than the next item "Voltage and Current Sensing Inputs to Protective Relays and associated circuitry" which is on a 12 year interval?? Please clarify this. 6. Implementation Plan: This revised standard will drive significant revisions in existing maintenance programs. 3 months is not adequate time after approval to ensure compliance with R1. A minimum of 6 months should be utilized after regulatory approval. The Implementation plan requirements should also recognize that if the requirement to maintain records of the two previous maintenance tasks is implemented, it may not be possible to produce this information upon implementation. The implementation plan should be structured that the requirement to produce previous maintenance records should be phased in as the maintenance is performed. (ie. The requirement to produce two

Organization	Question 7 Comment
	previous records for maintenance performed on a two year cycle should not be enforced until four years after implementation).
Response: Thank you for your comments. 1. Requirement R1, Part 1.1, has been revised to state, “Address all Protection System component types”. 2. Various means may be used. One suggestion would be work orders that addressed the issue. 3. It is left to the entity to determine HOW to address maintenance-correctable issues. It is reasonable that an entity would do so in a manner that presents the least disruption to the system and considers the impact of the malfunctioning component on reliability. 4. In order that a Compliance Monitor can be assured of compliance, the SDT believes that the Compliance Monitor will need the data of the most recent performance of the maintenance, as well as the data of the preceding one, as well as data to validate that entities have been in compliance since the last audit (or currently, since the beginning of mandatory compliance). The SDT has specified the data retention in the posted Standard to establish this level of documentation. The Tables have been rearranged and considerably revised to improve clarity. Please see new Table 1-1. 5. The Implementation Plan for Requirement R1 had been revised from 3 months to 12 months.	
Springfield Utility Board	SUB is supportive of the intent behind the standard and appreciates the ability to provide input into this process. 1.The following is a repeat of the comment in Question #5 with regard to the supplemental reference. SUB appreciates that Time Based, Performance Based, and Condition Based programs can be combined into one program. However it should be clear that a utility may include one, two or all three of these types of programs for each individual device type. Currently the language reads:"TBM, PBM, and CBM can be combined for individual components, or within a complete Protection System." The "and" requires all three to be combined if they are combined. SUB suggests the “and” be changed to "or" language. Change:"TBM, PBM, or CBM can be combined for individual components, or within a complete Protection System."

Organization	Question 7 Comment
Response: Thank you for your comments. Please see our response to your comment in Question 5.	
The Detroit Edison Company	1. Suggest that the implementation plan for R1 (PSMP) be changed to 12 months. 2. The statement in R1.1, "Identify all Protection System components" regarding the PSMP should be clarified. Is a complete list of every "component" of each specific protection system required to be included in the PSMP?
Response: Thank you for your comments. 1. The Implementation Plan for Requirement R1 has been revised from 3 months to 12 months. **2.** Requirement R1, Part 1.1, has been revised to state, "Address all Protection System component types."	
Long Island Power Authority	1. Table 1a under Maintenance Activities for Control and trip circuits with unmonitored solid-state trip or auxiliary contacts (UFLS/UVLS Systems Only) states: Perform a complete functional trip test that includes all sections of the Protection System control and trip circuit, including all solid-state trip and auxiliary contacts (e.g. paths with no moving parts), devices, and connections essential to proper functioning of the Protection System., except that verification does not require actual tripping of circuit breakers or interrupting devices. The word complete may be removed as it requires actually tripping the breakers. The sentence that tripping of the circuit breakers is not required contradicts with the word complete. 2. More specifics are required to spell out the adequate testing e.g. up to the lockout with the trip paths isolated etc. 3. Table 1a under Maintenance Activities for Station dc Supply (used only for UVLS or UFLS) states: Verify proper voltage of the dc supply. Is this requirement applicable to the distribution substations only? 4. Table 1a under Maintenance Activities for Station dc supply (battery is not used) - states Verify that the dc supply can perform as designed when the ac power from the grid is not present. - Please clarify this requirement.

Organization	Question 7 Comment
	5. Table 1a for Associated communications systems - specify the group for the applicability of this requirement. BPS,BES,UFLS etc. 6. Table 1a under Maintenance Activities for Associated communications systems states - Verify that the performance of the channel meets performance criteria, such as via measurement of signal level, reflected power, or data error rate. Why is this required? The requirement "Verify proper functioning of communications equipment inputs and outputs that are essential to proper functioning of the Protection System. Verify the signals to/from the associated protective relays seems sufficient to ensure reliability. 7. Table 1a under Maintenance Activities for Relay sensing for Centralized UFLS OR UVLS systems UVLS and UFLS relays that comprise a protection scheme distributed over the power system states: Perform all of the Maintenance activities listed above as established for components of the UFLS or UVLS systems at the intervals established for those individual components. The output action may be breaker tripping, or other control action that must be verified, but may be verified in overlapping segments. A grouped output control action need be verified only once within the specified time interval, but all of the UFLS or UVLS components whose operation leads to that control action must each be verified. Clarify what is meant by overlapping segments? What is the specified interval? Is actual breaker tripping required?

Response: Thank you for your comments.

1. The Tables have been rearranged and considerably revised to improve clarity. Please see new Table 1-5.
2. The Tables have been rearranged and considerably revised to improve clarity. Please see new Table 1-4.
3. The Tables have been rearranged and considerably revised to improve clarity. Please see new Table 1-4.
4. The Tables have been rearranged and considerably revised to improve clarity. Please see new Table 1-4.
5. The Tables have been rearranged and considerably revised to improve clarity. Please see new Table 1-3.
6. Communications systems are subject to a variety of problems. The listed activities will detect many of these problems. The Tables have been rearranged and considerably revised to improve clarity. Please see new Table 1-2.
7. The Tables have been rearranged and considerably revised to improve clarity. Please see new Table 1-1. Please see Section 8 of

Organization	Question 7 Comment
the Supplementary Reference document regarding “overlapping segments.”	
American Electric Power	1. The "Supplementary Reference" and the "Frequently-Asked Questions" document should be combined into a single document. This document needs to be issued as a controlled NERC approved document. AEP suggests that the document be appended to the standard so it is clear that following directions provided by NERC via the document are acceptable, and to avoid an entity being penalized during an audit if the auditor disagrees with the document’s contents. 2. NiCAD batteries should not be treated differently from Lead-Acid batteries. NiCAD battery condition can be detected by trending cell voltage values. Ohmic testing will also trend battery conditions and locate failed cells (although will usually lag behind cell voltages). A required load test is detrimental to the NiCAD manufacturer's business, and will definitely hurt the NiCAD business for T&D applications. Historically NiCADs may have been put into service because of greater reliability, smaller space constraints, and wider temperature operation range.”Individual cell state of charge” is a bad term because it implies specific gravity testing. Specific gravity cannot be measured automatically (without voiding battery warranty or using an experimental system), and when it is measured, it is unreliable due to stratification of the electrolyte and differing depths of electrolyte taken for samples. “Battery state of charge” can be verified by measuring float current. Once the charging cycle is over the battery current drops dramatically, and the battery is on float, signaling that the battery has returned to full state of charge. This is an appropriate measure for Level 3 monitoring as float current monitoring is a commercially viable option and electrolyte level monitoring is not. 3. In Table 2b, why is Ohmic testing required if the battery terminal resistance is monitored? Cell to cell and battery terminal resistance should not be monitored because they will be taken in 18 month intervals. This further supports the argument that the battery charger alarms would be sufficient for level 2 monitoring, while keeping an 18 month requirement for Ohmic testing, electrolyte level verification, and battery continuity (state of charge). Automatic monitoring of the float current should be sufficient for level 3 monitoring as it gives state of charge of the string, and battery continuity (detect open cells). Shorted cells will still be found during the Ohmic testing and a greater interval is sufficient to locate these problems.

Organization	Question 7 Comment
Response: Thank you for your comments. 1. The SDT disagrees that the documents should be combined. The Supplementary Reference is a holistic presentation of rationale and basis for the various elements of the Standard – discussing mostly the "what" behind the requirements. The FAQ, on the other hand, presents responses to specific frequently-asked questions, and, as such, offers more-focused advice on specific subjects, and is more of a how-to/example discussion. The FAQ is primarily a means of capturing some of the most prevalent comments offered on the Standard by various entities, with the SDT's response. The SDT believes that the format of the FAQ is a more effective means of presenting the included information than it would be to include this information within the text of the Supplementary Reference document. The Standards Committee has a formal process for determining whether to authorize posting a reference document with an approved standard. That process is posted on the Standard Resources web page – here is a link to the procedure: http://www.nerc.com/files/SC_Process_Approve_Supporting_References_Approved_10Mar08.pdf 2. The SDT believes that, since the IEEE Stationary Battery Committee has determined that VRLA batteries and Ni-Cad batteries are different enough to require separate IEEE Standards (IEEE 1188 and IEEE 1106, respectively), these battery technologies are different enough to be treated separately within PRC-005-2. The SDT has drawn upon these IEEE Standards, as well as other sources (EPRI, etc) to develop the Requirements of PRC-005-2. The trending activity cited has not been shown to be effective for Ni-Cad batteries (see FAQ II.5.G), and thus a performance tests must be performed; the performance test may take many forms. The Tables have been rearranged and considerably revised to improve clarity, and all references to specific gravity have been removed. Please see new Table 1-4. Determining the "state of charge" by monitoring the float voltage may be relevant to the overall station battery, but does not provide an indication of the condition of individual cells as required within the new Table 1-4. 3. Battery terminal resistance shows the condition of the external connections, but reveals nothing regarding the internal condition of the individual cells. Measuring the internal cell/unit resistance provides an opportunity to trend the cell condition over time by verifying the electrical path through the electrolyte within the battery. The ohmic testing is not intended to look for open cells/units, but instead at the ability of the individual cell/unit to perform properly. The new Table 1-4 clarifies that, if the electrolyte level is monitored, the internal ohmic testing need only be performed every six years. Please see FAQ II.5.B, II.5,C, and II.5.D for a discussion about continuity.	
JEA	The current interpretation by the SDT of partially monitored is set at a higher bar than most utilities use in their current designs today. We all wish to take advantage of the microprocessor relays and their renowned and improved monitoring capability. If TC1 is monitored by primary relay A and TC2 is

Organization	Question 7 Comment
	monitored by primary relay B, and these relays in turn monitor their DC supplies, the vast majority of the system is monitored - (partially monitored), including all the control cable out to the remote breakers and their trip coils. To add to this some additional contacts within the scheme, located very near the primary relays, is extending the partially monitored bar to a higher level than most designs incorporate today. If you know that 98% of the DC control system is monitored - isn't that partially monitored? Please consider changes to the SDT's current view of a partially monitored protection systems.
Response: Thank you for your comments. The Tables have been rearranged and considerably revised to improve clarity. Please see new Tables 1-1 through 1-5.	
Arizona Public Service Company	1. The generator Facilities subsections 4.2.5.1 through 5 are too prescriptive and inconsistent with sections 4.2.1 through 4. Recommend this section be limited to description of the function as in the preceding sections. 2. Clarification is needed on how the “Note 1” in Table 1a, which appears to be used in to define a calibration failure would be used in Time Based Maintenance. In PRC-005-2 Attachment A: Criteria for a Performance-Based Protection System Maintenance Program, a calibration failure would be considered an event to be used in determining the effectiveness of Performance Based Maintenance. It is unclear in how it will be used in time based maintenance.
Response: Thank you for your comments. 1. The SDT believes that transmission lines, UFLS, UVLS, and SPS are clear without additional granularity, but that the additional granularity regarding generation plants is necessary. This is illustrated by numerous questions regarding “what is included for generation facilities?” relative to PRC-005-1. 2. The Tables have been rearranged and considerably revised to improve clarity. In addition, the Note was removed, and Requirement 4 has been considerably revised.	
Pacific Northwest Small Public Power Utility Comment Group	1. The level 2 table regarding Protection Station dc supply states that level 1 maintenance activities are to be used, but then goes on to give a list of Maintenance Activities that don’t match those in level 1. Which activities shall we use? Same situation for Station DC Supply (battery is not used) where the

Organization	Question 7 Comment
	18 month interval is missing. 2. IEEE battery maintenance standards call for quarterly inspections. These are targets, though, not maximums. An entity wishing to avoid non-compliance for an interval that might extend past three calendar months due to storms and outages must set a target interval of two months thereby increasing the number of inspections each year by half again. This is unnecessarily frequent. We suggest changing the maximum interval for battery inspections to 4 calendar months. For consistency, we also suggest that all intervals expressed as 3 calendar months be changed to 4 calendar months. 3. We are concerned over R1.1, where all components must be identified, without a definition for the word component or the granularity specified. While the FAQ gives a definition, and allows for entity latitude in determining the granularity, the FAQ is not part of the standard. We believe this will allow REs to claim non-compliance for every three inch long terminal jumper wire not identified in a trip circuit path. We suggest that the FAQ definitions be included within the standard.
Response: Thank you for your comments. 1. The Tables have been rearranged and considerably revised to improve clarity. Please see new Table 1-4. 2. The SDT disagrees. The entity should schedule routine inspections to complete the specified activities within the specified 3-month interval. 3. Requirement R1, Part 1.1, has been revised to state, “Address all Protection System component types.”	
PNGC Power	The level 2 table regarding Protection Station dc supply states that level 1 maintenance activities are to be used, but then goes on to give a list of Maintenance Activities that don’t match those in level 1. Which activities shall we use? Same situation for Station DC Supply (battery is not used) where the 18 month interval is missing.
Response: Thank you for your comments. The Tables have been rearranged and considerably revised to improve clarity.	
MRO’s NERC Standards Review Subcommittee	1. The NSRS does not support the existing 2nd Draft of PRC-005-2 Standard because it is our opinion

Organization	Question 7 Comment
(NSRS)	that: o There is a high probability that system reliability will be reduced with this revised standard. o The utility industry is in the business of keeping the lights on, but these requirements will force the industry to take customers out of service in order to fulfill these requirements. A possible solution is to increase the test intervals, set performance targets, test set on a basis of past performance, etc. o The number of unplanned outages due to human error will increase considerably. o The requirement of a complete functional trip test will reduce the level of reliability and all levels of the BES to include distribution systems. o Availability of the BES will be reduced due to an increased need to schedule planned outages for test purposes (to avoid unplanned outages due to human error). o To implement this standard, an entity will need to hire additional skilled resources that are not readily available. (May require adjustments to the implementation timeline.) o The cost of implementing the revised standard will approximately double our existing cost to perform this work. 2. Requests that relevant reliability performance data (based on actual data and/or lessons learned from past operating incidents, Criteria for Approving Reliability Standards per FERC Order 672) be provided to justify the additional cost and reliability risks associated with functional testing. 3. Under a Performance-Based Program, what happens if the population of components drops below 60 (as all will eventually)? Is there an implementation period to default to TBM? 4. Please clarify In R1, the statement “or are designed to provide protection for the BES” re-opens the argument about transformer protection or breaker failure protection for transformer high-side breakers tripping BES breakers being included in the transmission protection systems. 5. Also, for Table 1b “Verify that each breaker trip coil, each auxiliary relay, and each lockout relay is electrically operated within this time interval” should be changed from a 6 year interval to a 12 year interval similar to the relay input and outputs. Experience has shown that these both have very

Organization	Question 7 Comment
	similar reliability. 6. The standard as currently drafted raises concern as it relates to the identification of all Protection System components, particularly those with associated communications equipment. In the case of leased lines, a utility would be expected to maintain equipment they do not own. Recommend revising the standard to consider maintenance activities on a communications channel basis in which intermediate device functioning can be verified by sending a signal from one relay to another. 7. Clarification should be given as to the reason for stating control circuitry separately, such as in "Control and trip circuits". As currently stated, this implies that close circuit DC paths are now subject to a protection system maintenance program when reclosing and closing of breakers have never before been considered part of a Protection System. 8. Statements 3 (For microprocessor relays, check the relay inputs and outputs that are essential to proper functioning of the Protection System.) and 6 (Verify correct operation of output actions that are used for tripping. in Table 1b for Protective Relays essentially address the same issue. Please clarify if these are addressing the same issue or not. If the purpose is to describe the functionality of the protection system, that should be covered under another section in the table, such as DC circuitry. 9. How one identifies a voltage and current sensing input is not well defined. In most cases, this should already be identified with the relay. Also, the scope of detail required is ambiguous. Would individual cables, terminal blocks, etc. need to be identified as would be implied by "associated circuitry"? Please clarify. The NSRS recommends that individual cables, terminal blocks, etc are not included in this program. 10. Recommend removing "proper functioning of" from the maintenance activities for voltage and current sensing inputs in Table 1b. A utility is not verifying the functionality of the signal(s), they are verifying the signals themselves. Any functioning of the signals, which is related to ensuring proper relay interpretation, would be covered under the protective relay section. 11. In general, has thought been put into the possibility of degrading reliability by implementing such a rigorous maintenance program? To implement such a program, the number of scheduled outages would greatly increase resulting in scheduling conflicts that will increase, as well as degrading

Organization	Question 7 Comment
	system conditions by taking lines, transformers, etc. out of service. Because of past design practices many of the requirements for maintenance will only be able to be performed by lifting wires to isolated trip paths. Potential error is introduced anytime a wire is lifted, especially numerous wires, by means of ensuring they are put back in the correct place. Redundancy is one thing that has been implemented in great detail throughout the history of protection systems to ensure that they work as intended. Diligent commissioning may need to be given its due credit.

Response: Thank you for your comments.

1. Thank you for your opinions.
2. The Standard does not preclude an entity from largely utilizing other methods of verification, although functional testing may be the easiest to achieve.
3. The entity must revert to TBM if the population falls below 60. There is no implementation period; the SDT believes that the annual PBM review will alert the entity that the population is nearing 60, and allow the entity to react to the diminishing component population accordingly.
4. This comment relates to your regional BES definition, not the Standard.
5. The Tables have been rearranged and considerably revised to improve clarity. Please see new Table 1-5. The SDT believes that mechanical solenoid-operated devices share performance attributes (and failure modes) with electromechanical relays and need to be tested at similar intervals. Performance-based maintenance is an option to increase the intervals if the performance of these devices supports those intervals.
6. The functional testing of the channel will verify that the communications system operates properly. If the communications system does not perform properly, the applicable entity is responsible to assure that it is restored to service; the physical actions to do so may have to be performed by other parties. Your suggested end-to-end test is one effective way of performing this maintenance; however, this is only one of several ways of doing this.
7. This component of the definition is stated to apply as “associated with protective functions” and thus excludes close/reclosing circuits. Please see FAQ II.1.A.
8. The Tables have been rearranged and considerably revised to improve clarity. Please see new Table 1-1.
9. This component of the Protection System definition is to generally include this functionality as a part of the Protection System. The

Organization	Question 7 Comment
detailed applicability of this component within PRC-005-2 is addressed within the Standard. The "protective relay" only addresses how the relay itself uses these signals, but does not address the concern regarding whether these signals are accurate. The Tables have been rearranged and considerably revised to improve clarity. Please see new Table 1-3. Requirement R1, part 1.1, has been revised to state, "Address all Protection System component types" to clarify that "individual cables, terminal blocks, etc." need not be discretely addressed. The definition has also been revised to remove "associated circuitry" from this portion. Please see FAQ II.3.A. 10. The Tables have been rearranged and considerably revised to improve clarity. Please see new Table 1-3. **11.** The SDT believes that performing these maintenance activities will benefit the reliability of the BES.	
Indiana Municipal Power Agency	1. The proposed effective date working is confusing and maybe incorrect. It looks like the second part of the paragraph refers to the additional maintenance and testing required by requirement 2 of the current version of PRC-005-1. PRC-005-2 will be adding additional maintenance and testing. Since the current wording is confusing, we are not sure when we have to ensure the new testing is done on the protection equipment. 2. When it comes to battery maintenance, the battery cell to cell connection resistance has to be verified. IMPA is not sure how the SDT wants this maintenance performed. Some battery banks are made up of individual battery cases with two posts at each end that contain two to four individual battery cells inside of each case. To actually tear down the individual cells in a case would be extremely hard and maybe impossible on the sealed cases without destroying the cases. It would be nice to describe how the SDT wants the connection resistance of battery cell to cell verified in the FAQ guide. 3. In the same guide, the SDT might give insight on what is meant by verifying the state of charge of the individual battery cell/units (table 1A). It seems like measuring the voltage level of the individual battery would work for this verification, but additional information of what the SDT wants for this verification would eliminate any doubt and help with being in compliant with this requirement.
Response: Thank you for your comments. 1. The SDT does not understand your concern. Perhaps you are referring to the Implementation Plan for the definition rather than the Implementation Plan for the Standard. The second bullet in the introductory portion of the Implementation Plan for the Standard has	

Organization	Question 7 Comment
been modified to state, " ... is being performed according to …" rather than "has been moved to" to be more concise. 2. The Tables have been rearranged and considerably revised to improve clarity. Please see new Table 1-4. The term "cell" has been modified to "cell/unit" to address part of your concern. Please see FAQ II.5.L. 3. The Tables have been rearranged and considerably revised to improve clarity. Please see new Table 1-4. IEEE Standards 1188, 450, and 1106 provide "how-to" guidance specific to various battery technologies.	
ReliabilityFirst Corp.	The SDT should be congratulated on its hard work in making substantial improvements to an existing standard. 1. In revising the draft standard, the SDT should consider the difficulty an entity will have in providing the evidence required to show compliance. 2. R1 unnecessarily limits PSMPs to "Protection Systems that use measurements of voltage, current, frequency and or phase angle to determine anomalies." However, if an entity applies devices that protect equipment based on other non-electrical quantities or principles such as temperature or changes in pressure, the entity is not required to maintain them. These types of devices have long been considered by many organizations as important forms of protection and therefore in some instances are connected to trip. There are also many organizations that consider these types of devices too unreliable to use as protection and therefore only connect them for monitoring (and not to trip). If protection based on non-electrical quantities is not properly maintained, it will Misoperate and will negatively impact reliability. The standard cannot simply ignore a type of protection that can ultimately affect the reliability of the BES.
Response: Thank you for your comments. 1. The SDT has considered this, and has provided examples in the Measures. Please see Section 15.7 of the Supplementary Reference document and FAQ IV.1.B. **2.** Requirement R1 does not preclude entities from maintaining such devices or including them in the PSMP.	
Indeck Energy Services	The standard should include an assessment of, and criteria for, determining whether a Protective System is important to reliability. It presently treats a fault current relay on a 345 kV or higher voltage

Organization	Question 7 Comment
	transformer the same as one on a small generator on the 115 kV system. The impact of failures on both on a hot summer day like we've had recently in NY, would be very different. As discussed at the FERC Technical Conference on Standards Development, the goal of the standards program is to avoid or prevent cascading outages--specifically not loss of load. This seems to have been lost in the drafting process. Much of the effort expended on complying with the existing PRC maintenance standards, as well as that to be expended on PRC-005-2, has little to no significant in terms of improving reliability. That effort could be better utilized if focused on activities that could significantly improve reliability. As one of the Commissioners at the FERC Technical Conference on Standards Development characterized the relationship between FERC and NERC as a wheel off the track. The whole standards program, and especially PRC-005-2, is off the track.
Response: Thank you for your comments. Your comments seem to be related to NERC Standards Development in general, and to BES definitions. The 2007-17 SDT is unable to address these concerns. The SDT is addressing its assignment from the approved SAR, and believes that performing maintenance on Protection Systems will benefit the reliability of the BES.	
US Bureau of Reclamation	1. The sub-requirements for R1, are not criteria, rather implementation requirements more suitable to be included in R4. Examples of what the PSMP shall address which would be more consistent with the language in R1 would be: • How are changes to the PSMP administered? • Who approves the determination of the use of time-based, condition based or performance based maintenance. • Who reviews activities under the PSMP 2. References used within the standard are not consistent. In R1.2 Attachment as is referred to as Attachment A. In R3 Attachment A is referred to as PRC-005 Attachment A. This implies a difference. Under a voluntary world, we could draft criteria and procedures with these problems and interpret them correctly. Today in the compliance world, the language must be precise and unambiguous. The reference must be the same it means something different. 3. The requirement in R1, which is consistent with the purpose, does not support the applicability in

Organization	Question 7 Comment
	R4.2.5.4. Protection systems associated with stations service are not designed to provide protection for the BES. In particular we have been told that intent was not to look at every device that tripped the generator but devises that sensed problems on the BES and trip the generator. Hence we include such things as frequency relays, Differential relays, zone relays, over current, and under voltage relays. Even a loss of field looks at the system as included. Speed sensing devices were explicitly excluded. As such, if the stations service transformer protection looks toward the BES (e.g. differential relays and zone relays) they would be included. Over current would not as it would be on the station side. If a Station Service transformer saw excess current, the system would in most cases fail over to other side. If not, it would cause the generator to trip much like a generator thermal device which is also excluded. Maintenance programs offer a unique problem to the FERC and regulatory world. The knee jerk reaction is to define them. What happens if the solution is bad, who will accept the consequences that narrow prescription was wrong and the interval caused a reliability impact. It would no longer be the Entity. History is replete with examples of this type of micro managing. Rather than fall into the same trap, and suffer the consequences of the unknown, allow Entities to optimize their programs to ensure reliability of the BES and create a standard of disallowed practices which have a demonstrated impact on reliability.
Response: Thank you for your comments. 1. Requirement R1 presents the requirements to establish a PSMP; Requirement R4 presents the implementation of the program. The SDT believes that this arrangement is correct. The examples cited seem to be related more to the internal administration of the PSMP within an entity, and not to the requirements. 2. The Standard has been modified to make these phrases consistent in consideration of your comment. 3. The SDT believes that the station service transformers may be essential to the operation of the generator (which is the BES element), and thus that the protection of these needs to be addressed as part of PRC-005-2.	
Bonneville Power Administration	1. The term “maintenance correctable issue” used in Requirement 4 seems to be at odds with the definition given for it. It seems that an issue that cannot be resolved by repair or calibration during the maintenance activity would be a maintenance non-correctable issue. Also, in Requirement 4, the term “identification of the resolution” is ambiguous. Suggested changes for Requirements 4 and 4.1

Organization	Question 7 Comment
	are: a. R4. Each Transmission Owner, Generator Owner, and Distribution Provider shall implement its PSMP, and resolve any performance problems as follows: b. 4.3 Ensure either that the components are within acceptable parameters at the conclusion of the maintenance activities or initiate actions to replace the component or restore its performance to within acceptable parameters.
Response: Thank you for your comments. **1.** The definition of "maintenance correctable issue" is consistent with the way it is used within the Standard.	
Santee Cooper	There is some discussion in the documents, such as the definition of component in the Frequently-Asked Questions, about the idea that an entity has some latitude in determining the level of "protection system component" that they use to identify protection systems in their program and documentation. The example given is about DC control circuitry. There are requirements in this standard that are specific to a component, such as R1.1 - Identify all protection system components. Historically, if your maintenance and testing program is defined as (say, for relays) testing all the relays in a station at one time, your program, test dates, etc. could be identified by the station. There needs to be some addition, possibly to the Frequently asked questions, to explain what kind of documentation will be required with this new standard. For example, if your program is to test all the relays at a station every 4 years, and all the relays are tested at the same time, can your documentation of your schedule (the "date last tested" and previous date) be listed by station (accepting that you should have the backup data to show the testing was thorough) or must you be able to provide a list by each relay. Without some clarification, it seems like this could get confusing at an audit with many of the requirements pertaining to "each component."
Response: Thank you for your comments. Requirement R1, Part 1.1, has been revised to state, "Address all Protection System component types." The remaining issues within your comment are dependent on how your PSMP addresses them.	
Northeast Power	1. UFLS systems by design can suffer random failures to trip. A requirement should exist that stipulates to perform maintenance on the UFLS relay as their failure to operate may affect numerous

Organization	Question 7 Comment
Coordinating Council	distribution level feeders. However maintenance on associated DC schemes connected to the devices should only be done on the same frequency as maintenance on the relevant interrupting devices. Consideration should be given to exempting schemes that have a maintenance program in place on those distribution level devices from PRC-005 Standard-specified maintenance intervals. Such Standard-specified intervals could apply to interrupting devices that have no maintenance program in place. 2. This standard is overly prescriptive. Owners of protection system equipment establish maintenance procedures and timelines based on manufacturers' recommendations and experiences to ensure reliability. Maintenance intervals change with improved practices and equipment designs, and whenever that occurs PRC-005 will have to go through the revision process, which would be frequent and unnecessary if the standard were more general.
Response: Thank you for your comments. 1. The Tables have been rearranged and considerably revised to improve clarity. Please see new Tables 1-1 through 1-5. 2. FERC Order 693 and the approved SAR for this project directed the SDT to establish both maximum maintenance intervals and minimum maintenance activities within the revised Standard.	
Entergy Services	We support this project and believe it is a positive step towards BES reliability. However, we believe the draft document needs additional work as per our comments. Also, as indicated by the amount of industry input on the last version draft comments, we believe revisions are still needed to properly address this technically complex standard. If this standard is to deviate from the original project schedule and follow a fast track timeline for approval, then we disagree with the 3 month implementation for Requirement 1 and ask for at least 12 months. The original schedule provided sufficient advance notice to work on an implementation plan and it included the typical time required for NERC Board of Trustees and regulatory approvals. If the project schedule and typical NERC Board of Trustees and regulatory approval times are to be accelerated, the implementation plan should be extended.
Response: Thank you for your comments. The Implementation Plan for Requirement R1 has been revised from 3 months to 12	

Organization	Question 7 Comment
months.	
Utility Services	With regard to DPs who own transmission Protection Systems, the standard is still very unclear on when a DP owns a transmission Protection System. Many DPs own equipment that is included within the definition of a Protection System; however, ownership of such equipment does not necessarily translate directly into a transmission Protection System under the compliance obligations of this standard. DPs need to know if this standard applies to them and right now, there is no certain way of determining that from within this language or previous versions of this standard. Additionally, the NPCC Regional Standards Committee withdrew a SAR on this very subject as we informed the question would be addressed in this proposal.
Response: Thank you for your comments. Your concern seems to be primarily related to the applicable regional BES definition.	
Y-W Electric Association, Inc.	1. Y-WEA concurs with Central Lincoln regarding the timing of required battery tests. The IEEE standards referenced indicate target maintenance intervals. In order to remain reasonable, then, this compliance standard needs to allow some buffer between a targeted maintenance and inspection interval and a maximum enforceable maintenance and inspection interval. Central Lincoln's suggestion of a four-month maximum window is reasonable and should be incorporated into the standard. 2. Y-WEA is also concerned with R1.1's language indicating that all components must be identified with no defined "floor" for the significance of a component to the Protection System. The SDT cannot possibly expect that a parts list containing every terminal block, wire and jumper, screw, and lug is going to be maintained with every single part having all the compliance data assigned to it, but without clearly stating this, that is exactly the degree of record-keeping that some overzealous auditor could attempt to hold the registered entity to. The FAQ is much clearer as to what is and is not a component and should be considered for the standard. 3. Y-WEA also concurs with FMPA's comments regarding the testing of batteries and DC control circuits associated with UFLS relaying. Many UFLS relays are installed on distribution equipment. Furthermore, many distribution equipment vendors are including UFLS functions in their distribution equipment. For example, many recloser controls incorporate a UFLS function in them. These

Organization	Question 7 Comment
	controls and the reclosers they are attached to, however, are strictly distribution equipment. 16 USC 824o (a)(1) limits the definition of the Bulk-Power System to "not include facilities used in the local distribution of electric energy." A distribution recloser and its control clearly fall into this exclusion. 16 USC 824o (i)(1) prohibits the ERO from developing standards that cover more than the Bulk-Power System. As such, the DC control circuitry and batteries associated with many UFLS relaying installations are precluded from regulation under NERC's reliability standards and may not be included in this standard because they are distribution equipment and therefore not part of the Bulk-Power System. The proposed standard needs to be rewritten to allow for this exclusion and to allow for the testing of only the UFLS function of any distribution class controls or relays.

Response: Thank you for your comments.

1. The SDT disagrees. You should complete the activities within the intervals specified.
2. Requirement R1, Part 1.1, has been revised to state, "Address all Protection System component types."
3. The Tables have been rearranged and considerably revised to improve clarity. Please see new Tables 1-4 and 1-5.

NERC
NORTH AMERICAN ELECTRIC RELIABILITY CORPORATION

Consideration of Comments on Proposed Definition of Protection System for Project 2007-17

The Protection System Maintenance and Testing Standard Drafting Team thanks all commenters who submitted comments on the draft definition of "Protection System." This document was posted for a special 35-day public comment period from June 11, 2010 through July 16, 2010. Stakeholders were asked to provide feedback on the proposed definition through a special Electronic Comment Form. There were 50 sets of comments, including comments from more than 110 different people from over 55 companies representing 8 of the 10 Industry Segments as shown in the table on the following pages.

Based on stakeholder comments, the drafting team refined its proposed definition of Protection System as shown below:

> Protective relays , which respond to electrical quantities, communication systems necessary for correct operation of protective functions, voltage and current sensing devices providing inputs to protective relays, station dc supply, and control circuitry associated with protective functions through the trip coil(s) of the circuit breakers or other interrupting devices.

Several comments questioned the reason for implementing the definition of Protection System in advance of implementing the proposed modifications to PRC-005-1. When the Board of Trustees was asked to approve an interpretation of PRC-005-1 that was written by the PSMT SDT, the board acknowledged the reliability gap identified by the drafting team caused by the definition of "protection system" and directed that work to close this reliability gap should be given "priority." To close this reliability gap the BOT has directed that revised definition be applied to PRC-005-1 as soon as practical - not years from now.

Stakeholder comments indicated that applying the expanded scope of the definition of Protection System would to PRC-005-1 would require more than six months and suggested expanding this to 12 months, and the drafting team made this change to the implementation plan. The team adjusted the implementation plan so that entities will have at least twelve months, rather than the six months originally proposed, to apply the new definition of Protection System to PRC-005-1 – Protection System Maintenance and Testing to Requirement R1 of PRC-005-1. The other parts of the implementation plan remain unchanged.

All work of the drafting team has been posted at the following site:

http://www.nerc.com/filez/standards/Protection_System_Maintenance_Project_2007-17.html

If you feel that your comment has been overlooked, please let us know immediately. Our goal is to give every comment serious consideration in this process! If you feel there has been an error or omission, you can contact the Vice President and Director of Standards, Herbert Schrayshuen, at 609-452-8060 or at Herb.Schrayshuen@nerc.net. In addition, there is a NERC Reliability Standards Appeals Process.[1]

[1] The appeals process is in the Reliability Standards Development Procedures: http://www.nerc.com/standards/newstandardsprocess.html.

Index to Questions, Comments, and Responses

1. Do you believe the proposed definition of Protection System is ready for ballot? If not, please explain why. 10

2. Do you agree with the implementation plan for the revised definition of Protection System? The implementation plan has two phases – the first phase gives entities at least six months to update their protection system maintenance and testing program; the second phase starts when the protection system maintenance and testing program has been updated and requires implementation of any additional maintenance and testing associated with the program changes by the end of the first complete maintenance and testing cycle described in the entity's revised program. If you disagree with this implementation plan, please explain why. 30

The Industry Segments are:

1 — Transmission Owners
2 — RTOs, ISOs
3 — Load-serving Entities
4 — Transmission-dependent Utilities
5 — Electric Generators
6 — Electricity Brokers, Aggregators, and Marketers
7 — Large Electricity End Users
8 — Small Electricity End Users
9 — Federal, State, Provincial Regulatory or other Government Entities
10 — Regional Reliability Organizations, Regional Entities

		Commenter	Organization	Industry Segment									
				1	2	3	4	5	6	7	8	9	10
1.	Group	Guy Zito	Northeast Power Coordinating Council										X

	Additional Member	Additional Organization	Region	Segment Selection
1.	Alan Adamson	New York State Reliability Council, LLC	NPCC	10
2.	Gregory Campoli	New York Independent System Operator	NPCC	2
3.	Kurtis Chong	Independent Electricity System Operator	NPCC	2
4.	Sylvain Clermont	Hydro-Quebec TransEnergie	NPCC	1
5.	Chris de Graffenried	Consolidated Edison Co. of New York, Inc.	NPCC	1
6.	Gerry Dunbar	Northeast Power Coordinating Council	NPCC	10
7.	Ben Eng	New York Power Authority	NPCC	4
8.	Brian Evans-Mongeon	Utility Services	NPCC	8
9.	Dean Ellis	Dynegy Generation	NPCC	5
10.	Brian L. Gooder	Ontario Power Generation Incorporated	NPCC	5
11.	Kathleen Goodman	ISO - New England	NPCC	2
12.	David Kiguel	Hydro One Networks Inc.	NPCC	1
13.	Michael R. Lombardi	Northeast Utilities	NPCC	1
14.	Randy MacDonald	New Brunswick System Operator	NPCC	2
15.	Bruce Metruck	New York Power Authority	NPCC	6

	Commenter	Organization	Industry Segment									
			1	2	3	4	5	6	7	8	9	10
16. Lee Pedowicz	Northeast Power Coordinating Council	NPCC 10										
17. Robert Pellegrini	The United Illuminating Company	NPCC 1										
18. Saurabh Saksena	National Grid	NPCC 1										
19. Michael Schiavone	National Grid	NPCC 1										
20. Peter Yost	Consolidated Edison Co. of New York, Inc.	NPCC 3										
21. Chantel Haswell	FPL Group	NPCC 5										
22. Si Truc Phan	Hydro-Quebec TransEnergie	NPCC 1										
2. Group	Steve Alexanderson	Pacific Northwest Small Public Power Utility Comment Group			X	X						
Additional Member	**Additional Organization**	**Region**	**Segment Selection**									
1. Russ Noble	Cowlitz PUD	WECC	3, 4, 5									
2. Dave Proebstel	Clallam County PUD	WECC	3									
3. John Swanson	Benton PUD	WECC	3									
4. Steve Grega	Lewis County PUD	WECC	3, 5									
3. Group	Margaret Ryan	PNGC Power			X					X		
Additional Member	**Additional Organization**	**Region**	**Segment Selection**									
1.	Blachly-Lane Electric Cooperative	WECC	3									
2.	Central Electric Cooperative	WECC	3									
3.	Clearwater Electric Cooperative	WECC	3									
4.	Consumer's Power Company	WECC	3									
5.	Coos-Curry Electric Cooperative	WECC	3									
6.	Douglas Electric Cooperative	WECC	3									
7.	Fall River Electric Cooperative	WECC	3									
8.	Lane Electric Cooperative	WECC	3									
9.	Lincoln Electric Cooperative	WECC	3									
10.	Lost River Electric Cooperative	WECC	3									
11.	Northern Lights Electric Cooperative	WECC	3									
12.	Okanogan Electric Cooperative	WECC	3									
13.	Raft River Electric Cooperative	WECC	3									

		Commenter	Organization	Industry Segment									
				1	2	3	4	5	6	7	8	9	10
14.		Salmon River Electric Cooperative	WECC 3										
15.		Umatilla Electric Cooperative	WECC 3										
16.		West Oregon Electric Cooperative	WECC 3										
17.		PNGC	WECC 8										
4.	Group	Denise Koehn	Bonneville Power Administration	X		X		X	X				
	Additional Member	Additional Organization	Region Segment Selection										
1.	Dean Bender	BPA, Transmission SPC Technical Svcs	WECC 1										
5.	Group	Sam Ciccone	FirstEnergy	X		X	X	X	X				
	Additional Member	Additional Organization	Region Segment Selection										
1.	Doug Hohlbaugh	FE	RFC 1, 3, 4, 5, 6										
2.	Jim Kinney	FE	RFC 1										
3.	Ken Dresner	FE	RFC 5										
4.	Brian Orians	FE	RFC 5										
5.	Bill Duge	FE	RFC 5										
6.	J. Chmura	FE	RFC 1										
7.	Dave Folk	FE	RFC 1, 3, 4, 5, 6										
6.	Group	Terry L. Blackwell	Santee Cooper	X		X			X				
	Additional Member	Additional Organization	Region Segment Selection										
1.	S. Tom Abrams	Santee Cooper	SERC 1										
2.	Rene' Free	Santee Cooper	SERC 1										
3.	Bridget Coffman	Santee Cooper	SERC 1										
7.	Group	Kenneth D. Brown	Public Service Enterprise Group ("PSEG Companies")	X		X		X	X				
	Additional Member	Additional Organization	Region Segment Selection										
1.	Jim Hubertus	PSE&G	RFC 1, 3										
2.	Scott Slickers	PSEG Power Connecticut	NPCC 5										
3.	Jim Hebson	PSEG ER&T	ERCOT 5, 6										
4.	Dave Murray	PSEG Fossil	RFC 5										

		Commenter	Organization	Industry Segment									
				1	2	3	4	5	6	7	8	9	10
8.	Group	Daniel Herring	The Detroit Edison Company			X	X	X					
	Additional Member	**Additional Organization**	**Region**	**Segment Selection**									
1.	David A Szulczewski	Relay Engineering	RFC	3, 4, 5									
9.	Group	Sasa Maljukan	Hydro One	X									
	Additional Member	**Additional Organization**	**Region**	**Segment Selection**									
1.	David Kiguel	Hydro One Networks, Inc.	NPCC	1									
10.	Individual	Sandra Shaffer	PacifiCorp	X		X		X	X				
11.	Individual	Brent Inebrigtson	E.ON U.S.	X		X		X	X				
12.	Individual	Brandy A. Dunn	Western Area Power Administration	X					X				
13.	Individual	Jana Van Ness	Arizona Public Service Company	X		X		X	X				
14.	Individual	Jack Stamper	Clark Public Utilities	X									
15.	Individual	Dan Roethemeyer	Dynegy Inc.					X					
16.	Individual	Robert Ganley	Long Island Power Authority	X									
17.	Individual	Lauri Dayton	Grant County PUD	X				X					
18.	Individual	Fred Shelby	MEAG Power	X		X		X					
19.	Individual	James A. Ziebarth	Y-W Electric Association, Inc				X						
20.	Individual	Armin Klusman	CenterPoint Energy	X									
21.	Individual	Andrew Z.Pusztai	American Transmission Company	X									
22.	Individual	Eric Ruskamp	Lincoln Electric System	X		X		X	X				
23.	Individual	Kasia Mihalchuk	Manitoba Hydro	X		X		X	X				
24.	Individual	Edward Davis	Entergy Services	X		X		X	X				
25.	Individual	James Sharpe	South Carolina Electric and Gas	X		X		X	X				
26.	Individual	Jon Kapitz	Xcel Energy	X		X		X	X				
27.	Individual	Scott Kinney	Avista Corp	X									

		Commenter	Organization	Industry Segment									
				1	2	3	4	5	6	7	8	9	10
28.	Individual	Amir Hammad	Constellation Power Generation					X					
29.	Individual	Jeff Nelson	Springfield Utility Board			X							
30.	Individual	Michael R. Lombardi	Northeast Utilities	X		X		X					
31.	Individual	John Bee	Exelon	X		X		X					
32.	Individual	Barb Kedrowski	We Energies			X	X	X					
33.	Individual	Jianmei Chai	Consumers Energy Company			X	X	X					
34.	Individual	Art Buanno	ReliabilityFirst Corp.										X
35.	Individual	Greg Rowland	Duke Energy	X		X		X	X				
36.	Individual	Thad Ness	American Electric Power	X		X		X	X				
37.	Individual	Rex Roehl	Indeck Energy Services					X					
38.	Individual	Claudiu Cadar	GDS Associates	X									
39.	Individual	Terry Bowman	Progress Energy Carolinas	X		X		X	X				
40.	Individual	Kirit Shah	Ameren	X		X		X	X				
41.	Group	Joe Spencer - SERC staff and Phil Winston - PCS co-chair	SERC Protection and Control Sub-committee (PCS)										X

	Additional Member	Additional Organization	Region	Segment Selection
1.	Paul Nauert	Ameren Services Co.	SERC	
2.	Bob Warren	Big Rivers Electric Corp.	SERC	
3.	Trevor Foster	Calpine Corp.	SERC	
4.	John (David) Fountain	Duke Energy Carolinas	SERC	
5.	Paul Rupard	East Kentucky Power Coop.	SERC	
6.	Charles Fink	Entergy	SERC	
7.	Marc Tunstall	Fayetteville Public Works Commission	SERC	
8.	John Clark	Georgia Power Co	SERC	
9.	Nathan Lovett	Georgia Transmission Corp	SERC	

	Commenter	Organization	Industry Segment									
			1	2	3	4	5	6	7	8	9	10
10. Danny Myers	Louisiana Generation, LLC	SERC										
11. Ernesto Paon	Municipal Electric Authority of GA	SERC										
12. Jay Farrington	PowerSouth Energy Coop.	SERC										
13. Jerry Blackley	Progress Energy Carolinas	SERC										
14. Joe Spencer	SERC Reliability Corp	SERC										
15. Russ Evans	South Carolina Electric and Gas	SERC										
16. Bridget Coffman	South Carolina Public Service Authority	SERC										
17. Phillip Winston	Southern Co. Services Inc.	SERC										
18. George Pitts	Tennessee Valley Authority	SERC										
19. Rick Purdy	Virginia Electric and Power Co.	SERC										
42. Group	Frank Gaffney	Florida Municipal Power Agency	X		X	X	X	X				
Additional Member	**Additional Organization**	**Region**	**Segment Selection**									
1. Timothy Beyrle	Utilities Commission of New Smyrna Beach	FRCC	4									
2. Greg Woessner	Kissimmee Utility Authority	FRCC	1									
3. Jim Howard	Lakeland Electric	FRCC	1									
4. Lynne Mila	City of Clewiston	FRCC	3									
5. Joe Stonecipher	Beaches Energy Services	FRCC	1									
6. Cairo Vanegas	Fort Pierce Utilities Authority	FRCC	4									
43. Group	Richard Kafka	Pepco Holdings, Inc. - Affiliates	X		X		X	X				
Additional Member	**Additional Organization**	**Region**	**Segment Selection**									
1. Alvin Depew	Potomac Electric Power Company	RFC	1									
2. Carl Kinsley	Delmarva Power & Light	RFC	1									
3. Rob Wharton	Delmarva Power & Light	RFC	1									
4. Evan Sage	Potomac Electric Power Company	RFC	1									
5. Carlton Bradsaw	Delmarva Power & Light	RFC	1									
6. Jason Parsick	Potomac Electric Power Company	RFC	1									
7. Walt Blackwell	Potomac Electric Power Company	RFC	1									
8. John Conlow	Atlantic City Electric	RFC	1									
9. Randy Coleman	Delmarva Power & Light	RFC	1									

		Commenter	Organization	Industry Segment									
				1	2	3	4	5	6	7	8	9	10
44.	Group	Mallory Huggins	NERC Staff										

	Additional Member	Additional Organization	Region	Segment Selection
1.	Joel DeJesus	NERC	NA - Not Applicable	NA
2.	Mike DeLaura	NERC	NA - Not Applicable	NA
3.	Al McMeekin	NERC	NA - Not Applicable	NA
4.	Earl Shockley	NERC	NA - Not Applicable	NA
5.	Bob Cummings	NERC	NA - Not Applicable	NA
6.	David Taylor	NERC	NA - Not Applicable	NA

45.	Individual	JT Wood	Southern Company Transmission	X		X							
46.	Individual	Tom Schneider	WECC										X
47.	Individual	Hugh Conley	Allegheny Power	X									
48.	Individual	Scott Berry	Indiana Municipal Power Agency				X						
49.	Individual	Terry Habour	MidAmerican Energy Company	X									
50.	Individual	Martin Bauer	US Bureau of Reclamation					X					

1. Do you believe the proposed definition of Protection System is ready for ballot? If not, please explain why.

Summary Consideration: Almost half of the commenters felt that the definition itself was not ready for ballot.

Many commenters wanted more clarity regarding the portion of the definition addressing "voltage and current sensing inputs to protective relays ... ". The SDT inserted the words "devices providing" into the phrase to clarify that instrument transformers are included in the definition. This portion of the definition now reads:

- Voltage and current sensing devices providing inputs to protective relays,

Many commenters also suggested that the definition should limit the protective relays "to those using electrical quantities", rather than addressing this subject as a footnote in the standard. The SDT incorporated this suggestion; this portion of the definition now reads:

- "Protective relays which respond to electrical quantities".

The SDT also removed the phrase "from the station dc supply" from the "control circuitry" portion of the definition.

Some commenters suggested that "protective relays" be defined; the SDT chose not to do this as IEEE already defines this term. Many commenters also offered comments on the standard itself. These comments are being addressed in the comment forms for the standard.

The revised definition is:

Protection System:

- Protective relays which respond to electrical quantities,
- Communications systems necessary for correct operation of protective functions,
- Voltage and current sensing devices providing inputs to protective relays,
- Station dc supply, and
- Control circuitry associated with protective functions through the trip coil(s) of the circuit breakers or other interrupting devices.

Several commenters indicated that the definition should not apply to PRC-005-1. When the Board of Trustees was asked to approve an interpretation of PRC-005-1 that was written by the PSMT SDT, the board acknowledged the reliability gap identified by the

drafting team caused by the definition of "protection system" and directed that work to close this reliability gap should be given "priority." To close this reliability gap the BOT has directed that revised definition be applied to PRC-005-1 as soon as practical - not years from now. The implementation plan now proposes at least 12 months for entities to apply the new definition to PRC-005-1, and that should give entities time to apply the new definition to PRC-005-1.

Organization	Yes or No	Question 1 Comment
GDS Associates	No	1. The inserted wording "and associated circuitry from the voltage and current sensing devices" implies that the maintenance program will include the verification, monitoring, etc. of the wiring from the voltage/current sensing devices which requirement will be a bit excessive under current presentation of the standard. See comment on the standard as well. 2. SDT's additional wording such as "from the station DC supply through the trip coil(s) of the circuit breakers or other interrupting devices" can be a bit of an issue as the coils could be good at time of verification and testing, but can fail right after or due to the testing. We recommend to change the Protection System definition to read "up to the trip coils(s)" instead the word "through"
Response: Thank you for your comments. **1. The definition has been modified to say, "voltage and current sensing devices providing inputs to protective relays".** **2. The SDT disagrees, and asserts that the trip coil(s) must be included within the Protection System. The observation that the element may be good at the time of verification and testing, but fail immediately thereafter, is true of any device that is not monitored continuously for proper operating function.**		
Grant County PUD	No	1) We note that the definition of a "Protection System" has been expanded to include the trip coils and what used to be confined to batteries has now been expanded to "station DC supply." "Trip coils" is an improvement. Inasmuch as the mark-up changing "DC" to "dc" is intended to communicate a more general term as opposed to a strict definition, it leaves room for differing opinions among auditors as to what all should be included. We

Organization	Yes or No	Question 1 Comment
		support the change to exclude battery chargers since the rationale for their inclusion was never clear. The battery itself will be, without exception, the "first responder" to provide DC power to a Protection System. However, battery chargers have not been excluded under the FAQs. 2) The SPCTF's effort to define applicability in terms of "Facilities" is confusing. Additionally, it is unclear how the terms "component," "element" and "Facility" are intended to relate to one another. An assumption may be that one or more components (which are physical assets) can comprise an "element," one or more of which can be associated with an identifiable function, aligning with the five Protection System Equipment Categories, found in SPCTF's "PROTECTION SYSTEM MAINTENANCE-A Technical Reference, dated Sept. 13, 2007, and that "Facility" is as used in 4.2.1 of the Standard Development Roadmap, dated May 27, 2010. Please provide guidance on the terms relate to one another. 3) The structure of the proposed standard is less clear than the existing standard PRC-005-1 because of the potential for ambiguity between the definition of Protection System and how the term "Facilities" is applied. A suggested resolution would be to revise the definition of Protection System to resolve this ambiguity or to delete reference to 86 lockouts and auxiliary relays in the description of "Facilities." If the 86 lockout relays are to be included, they should be added as part of the DC Control Circuitry "element" (as found in the NERC Glossary) of the circuit that energizes the 86 relay, thus placing it within the definition of a "Protection System."-once-and therefore in a manner that would require only one scheduled maintenance to be performed if the testing schemes are properly set up. We do agree, however, that sudden pressure relays, reclosing relays, and other non fault detecting relays such as loss of cooling relays should not be referenced as part of the "dc control circuitry" Element.
Response: Thank you for your comments. **1. A recent Interpretation request, referring to the currently approved definition specifying "station batteries", excluded**		

Organization	Yes or No	Question 1 Comment
battery chargers. The change to "station dc supply" is intended to expand the definition to include all essential elements including battery chargers; without proper functioning of battery chargers, the battery will be discharged by normal station dc load, and will be unable to perform its function; also, there are some entities which use a charger to provide the dc supply without use of a battery. Use of "dc" rather than "DC" reflects the IEEE style guide for this term. The FAQ intentionally does not exclude battery chargers as the SDT intend to include them within PRC-005-2. **2. This comment does not appear to apply to the definition, but instead to the draft Standard itself.** **3. The SDT contends that "dc control circuitry" includes elements such as lockout relays and auxiliary relays.**		
Consumers Energy	No	1. It is unclear whether "voltage and current sensing inputs" include the instrument transformer itself, or does it pertain to only the circuitry and input to the protective relays? 2. It is not clear what is included in the component, "station dc supply" without referring to other documents (the posted Supplementary Reference and/or FAQ) for clarification. The definition should be sufficiently detailed to be clear. 3. If Protection Systems trip via AC methods, are those systems, and the associated control circuitry included?
Response: Thank you for your comments. **1. The SDT has modified the definition for clarity; the SDT intends that the output of these devices, measured at the relay, properly represents the primary quantities.** **2. There are many possible variations to "station dc supply"; it seems impossible to reflect all variations in the definition. The definition must be sufficiently general such that variations can be included.** **3. The definition has been generalized such that ac tripping is included.**		
Public Service Enterprise Group ("PSEG Companies")	No	Based on review of ballot pool comments there are still too many questions that should be resolved prior to submittal for ballot. It is suggested that a specific reference to the supplementary reference document figures 1 & 2 and the legend be added. That would

Organization	Yes or No	Question 1 Comment
		further define the protection system components and scope boundary.
Response: Thank you for your comments. The SDT has revised the definition to make it more clear as a stand-alone product.		
CenterPoint Energy	No	CenterPoint Energy believes the proposed definition of "Protection System" is technically incorrect. The present definition does not include trip coils of interrupting devices, such as circuit breakers; and correctly so, as trip coils are components of the interrupting device. A Protection System has correctly performed its function if it provides tripping voltage up to the circuit breaker trip coil. From that point, the circuit breaker can fail to timely interrupt fault current due to several factors, such as a binding mechanism that affects breaker clearing time, a broken pull rod, a bad insulating medium, or bad trip coils. Local breaker failure protection, or remote backup protection, is installed to address the various possible causes of circuit breaker failure. For correctness, the definition of "Protection System" should be "Protective relays, communication systems necessary for correct operation of protective functions, voltage and current sensing inputs to protective relays and associated circuitry from the voltage and current sensing devices, station dc supply, and control circuitry associated with protective functions from the station dc supply UP TO THE TERMINALS OF the trip coil(s) of the circuit breakers or other interrupting devices."
Response: Thank you for your comments. The SDT disagrees, and asserts that the trip coil(s) must be included within the Protection System.		
Constellation Power Generation	No	Constellation believes that this definition is to verbose, which can lead to unintended interpretations. Constellation is concerned with the term sensing inputs, which may infer that testing on instrument transformers must be completed while they are energized. This proves difficult at a generating facility where most testing is completed during planned outages when this equipment is not energized.

Organization	Yes or No	Question 1 Comment
4. Response: Thank you for your comments. The SDT has modified the definition for clarity; the SDT intends that the output of these devices, measured at the relay, properly represents the primary quantities. Testing methods are not a part of the definition.		
Hydro One	No	1. Hydro One suggests adding "Components including" in the beginning. This is because the word "components" has been used extensively throughout the standard and there is no mention of what constitutes a protection system component in the standard. The word "component" does find mention in FAQs, however, it is recommended to mention it in the main standard. The revised definition should read as follows: Protective System Components including Protective relays, communication systems necessary for correct operation of protective functions, voltage and current sensing devices providing inputs to protective relays and associated circuitry from the voltage and current sensing devices, station dc supply, and control circuitry associated with protective functions from the station dc supply through the trip coil(s) of the circuit breakers or other interrupting devices. 2. There is not enough clarity on whether a Distribution Provider (DP) will be able to clearly identify which all protection system components does it own and need to maintain. This is critical since NPCC had proposed a SAR to this effect which was not accepted by NERC citing that this concern will be incorporated in the revised standard. 3. Also, reference should be made to Project 2009-17 in which Y-W Electric Association, Inc. (Y-WEA) and Tri-State Generation and Transmission Association, Inc. (Tri-State) requested an interpretation of the term "transmission Protection System" and specifically whether protection for a radially-connected transformer protection system energized from the BES is considered a transmission Protection System and is subject to these standards.
Response: Thank you for your comments. **1. The SDT believes that the suggested text does not add to the definition, and may actually lead to additional problems,**		

Organization	Yes or No	Question 1 Comment
such as an implication that the list within the definition is incomplete. **2. This issue is properly addressed within the Standard, not within the definition.** **3. This issue relates to the application of the standard, and is not part of the definition.**		
Pacific Northwest Small Public Power Utility Comment Group	No	1. It is still unclear whether relays that respond to mechanical inputs, such as sudden pressure relays, are included in the proposed definition as protective relays. While PRC-005-2 R1 limits the scope of that particular standard to protection systems that sense electrical quantities, it is remains unclear in other standards that use the defined term whether mechanical input protections are included. 2. We suggest that "Protective Relay" also be defined, and that the definition clearly exclude devices that respond to mechanical inputs in line with the NERC interpretation of PRC-005-1 in response to the CMPWG request.
Response: Thank you for your comments. **1. The definition has been modified to specify, "Protective relays which respond to electrical quantities".** **2. "Protective relay" is defined by IEEE and does not have a unique meaning when used in a NERC standard, thus the SDT sees no need to either modify or duplicate that definition.**		
Pepco Holdings, Inc. - Affiliates	No	It is still unclear whether relays that respond to mechanical inputs, such as sudden pressure relays, are included in the proposed definition as protective relays. While PRC-005-2 R1 limits the scope of that particular standard to protection systems that sense electrical quantities, it remains unclear in other standards that use the term "Protection System" (such as PRC-004) whether devices responding to mechanical inputs

Organization	Yes or No	Question 1 Comment
		are included. As such, we suggest that the term “Protective Relay” also be defined, and that the definition clearly exclude devices that respond to mechanical inputs in line with the NERC interpretation of PRC-005-1 in response to the CMPWG request.
Response: Thank you for your comments. **The definition has been modified to specify, “Protective relays which respond to electrical quantities”.** **“Protective relay” is defined by IEEE and does not have a unique meaning when used in a NERC standard, thus the SDT sees no need to either modify or duplicate that definition.**		
PNGC Power	No	It is still unclear whether relays that respond to mechanical inputs, such as sudden pressure relays, are included in the proposed definition as protective relays. While PRC-005-2 R1 limits the scope of that particular standard to protection systems that sense electrical quantities, it is remains unclear in other standards that use the defined term whether mechanical input protections are included. We suggest that “Protective Relay” also be defined, and that the definition clearly exclude devices that respond to mechanical inputs in line with the NERC interpretation of PRC-005-1 in response to the CMPWG request.
Response: Thank you for your comments. **The definition has been modified to specify, “Protective relays which respond to electrical quantities”.** **“Protective relay” is defined by IEEE and does not have a unique meaning when used in a NERC standard, thus the SDT sees**		

Organization	Yes or No	Question 1 Comment
no need to either modify or duplicate that definition.		
Duke Energy	No	It is unclear whether the revised definition includes PTs and CTs, but it does include the wiring. We don't see a way to list the wiring in R1.1 and provide supporting compliance evidence. We believe the phrase "and associated circuitry from the voltage and current sensing devices" should be struck from the definition.
Response: Thank you for your comments. The definition has been modified as suggested.		
Indeck Energy Services	No	It presumes that all relays in a plant are Protective Systems that affect BES reliability. As discussed at the FERC Technical Conference on Standards Development, the goal of the standards program is to avoid or prevent cascading outages--specifically not loss of load. The purpose of PRC-005-2 uses the term in its global sense but there is no subset of the Protection Systems that affect reliability. PRC-005 R1 requires identification of all components. With the broad definition proposed and no separate term for only relays and other components that have been identified as affecting reliability, confusion results. If this term has its global meaning, then another term, such as Reliability Protection Systems, should be instituted to avoid confusion.
Response: Thank you for your comments. The SDT believes that this issue is one for application of the definition within various standards, not one of the definition itself.		
Lincoln Electric System	No	LES believes the proposed definition of Protection System as written remains open to interpretation. LES offers the following Protection System definition for the SDT's consideration: "Protection System" is defined as: A system that uses measurements of

Organization	Yes or No	Question 1 Comment
		voltage, current, frequency and/or phase angle to determine anomalies and trips a portion of the BES and consists of 1) Protective relays, and associated auxiliary relays, that initiate trip signals to trip coils, 2) associated communications channels, 3) current and voltage transformers supplying protective relay inputs, 4) dc station supply, excluding battery chargers, and 5) dc control trip path circuitry to the trip coils of BES connected breakers, or equivalent interrupting device, and lockout relays.
Response: Thank your for your comments. The SDT has modified the definition to address some of the suggestions. Other elements of the suggestion do not add to the existing definition, and the SDT disagrees with the suggestions regarding "trip a portion of the BES" since Special Protection Systems and UVLS may actually trip non-BES facilities, and with excluding battery chargers.		
Long Island Power Authority	No	1. LIPA suggests adding "Protection System Components including" in the beginning. This is because the word "components" has been used extensively throughout the standard and there is no mention of what constitutes a protection system component in the standard. The word "component" does find mention in FAQs, however, it is recommended to mention it in the main standard. 2. Also, LIPA proposes a change in the proposed definition (changing "voltage and current sensing inputs" to "voltage and current sensing devices providing inputs").The revised definition should read as follows: Protective System Components including Protective relays, communication systems necessary for correct operation of protective functions, voltage and current sensing devices providing inputs to protective relays and associated circuitry from the voltage and current sensing devices, station dc supply, and control circuitry associated with protective functions from the station dc supply through the trip coil(s) of the circuit breakers or other interrupting devices. 3. There is not enough clarity on whether a Distribution Provider (DP) will be able to clearly identify all protection system components it owns and needs to maintain. This is critical since NPCC had proposed a SAR to this effect which was not accepted by NERC citing that this concern will be incorporated in the revised standard.

Organization	Yes or No	Question 1 Comment
Response: Thank you for your comments. **1. The SDT believes that the suggested text does not add to the definition, and may actually lead to additional problems, such as an implication that the list within the definition is incomplete.** **2. The SDT has modified the definition as suggested regarding voltage and current sensing inputs.** **3. This issue is properly addressed within the Standard.**		
Progress Energy Carolinas	No	See comment associated with question 2.
Response: Thank you for your comments. Please see our response to your comment associated with question 2.		
Northeast Power Coordinating Council	No	1. Suggest adding “Protection System Components including” in the beginning. This is because the word “components” has been used extensively throughout the standard and there is no mention of what constitutes a protection system component in the standard. The word “component” does find mention in FAQs, however, it is recommended to mention it in the body of the standard. The revised definition should read as follows: Protection System Components including Protective relays, communication systems necessary for correct operation of protective functions, voltage and current sensing devices providing inputs to protective relays and associated circuitry from the voltage and current sensing devices, station dc supply, and control circuitry associated with protective functions from the station dc supply through the trip coil(s) of the circuit breakers or other interrupting devices. 2. An alternative definition for Protection System to eliminate the need to capitalize “component”:The collective components comprised of protective relays, communication systems necessary for correct operation of protective functions, voltage and current sensing devices providing inputs to protective relays and associated circuitry from the voltage and current sensing devices, station dc supply, and control circuitry associated with protective functions from the station dc supply through the trip coil(s) of the circuit

Organization	Yes or No	Question 1 Comment
		breakers or other interrupting devices. 3. There is not enough clarity on whether a Distribution Provider (DP) will be able to clearly identify which protection system components it does own and needs to maintain. Many DPs own and/or operate equipment identified in the existing or proposed definition. However, not all such equipment translates into a transmission Protection System. The definition needs clarification on when such equipment is a part of the transmission protection system. This is critical since NPCC had proposed a SAR to this effect which was not accepted by NERC citing that this concern will be incorporated in the revised standard. Also, reference should be made to Project 2009-17 in which Y-W Electric Association, Inc. (Y-WEA) and Tri-State Generation and Transmission Association, Inc. (Tri-State) requested an interpretation of the term "transmission Protection System" and specifically whether protection for a radially-connected transformer protection system energized from the BES is considered a transmission Protection System and is subject to these standards.
Response: Thank you for your comments. **1. The SDT believes that the suggested text does not add to the definition, and may actually lead to additional problems, such as an implication that the list within the definition is incomplete.** **2. The SDT believes that the suggested text does not add to the definition, and may actually lead to additional problems, such as an implication that the list within the definition is incomplete.** **3. This issue relates to the application of the standard, and is not part of the definition.**		
Y-W Electric Association, Inc	No	The application of this definition to Reliability Standards NUC-001-2, PER-005-1, PRC-001-1, and PRC-004-1 results in confusion as to whether relays with mechanical inputs are included or excluded from this definition. PRC-005-2_R1 contains language limiting its applicability to relays operating on electrical inputs only, but the remaining standards that rely on this definition are not so specific. This being the case, it would make much more sense to clearly define what devices are actually meant in the glossary definition rather

Organization	Yes or No	Question 1 Comment
		than leaving it up to each individual standard to do so.
Response: Thank you for your comments. The definition has been modified to specify, "Protective relays which respond to electrical quantities".		
Arizona Public Service Company	No	1. The change to the definition relative to the voltage and current sensing devices is too prescriptive. 2. Methods of determining the integrity of the voltage and current inputs into the relays to ensure reliability of the devices should be up to the discretion of the utility.
Response: Thank you for your comments. **1. The SDR modified the definition, relating to voltage and current sensing inputs, for clarity.** **2. The issue regarding methods, etc, is an issue for the standard itself, not the definition.**		
MidAmerican Energy Company	No	The definition is expanded and clarified in the language of PRC-005-2. These changes should be incorporated in the definition to insure it is used consistently in PRC-005 and any other standards where it appears. The following is a suggested revised definition:"Protection System" is defined as: A system that uses measurements of voltage, current, frequency and/or phase angle to determine anomalies and to trip a portion of the BES to provide protection for the BES and consists of 1) Protective relays for BES elements and, 2) Communications systems necessary for correct BES protection system operations and, 3) Current and voltage sensing devices supplying BES protective relay input and, 4) Station DC supply to BES protection systems excluding battery chargers, and 5) DC control trip paths to the trip coil(s) of the circuit breakers or other interrupting devices for BES elements.

Organization	Yes or No	Question 1 Comment
Response: Thank your for your comments. **The SDT modified the definition to address some of the suggestions. Other elements of the suggestion do not add to the existing definition, and the SDT disagrees with the suggestions regarding "trips a portion of the BES" since Special Protection Systems and UVLS may actually trip non-BES facilities, and with excluding battery chargers.**		
The Detroit Edison Company	No	The definition should clarify whether current and voltage transformers themselves are included.
Response: Thank you for your comments. The SDT modified the definition to state, "voltage and current sensing devices providing inputs to protective relays".		
Avista Corp	No	The modified definition of Protection System now refers to "functions" rather than "devices." What are the "functions?" This new term adds confusion without being defined in the standard.
Response: Thank you for your comments. The "functions" are the accumulated performance of the various portions of the Protection System. This term is used to distinguish "protective functions" from annunciation, signaling, or information.		
American Electric Power	No	The term "station" should either be defined or removed from the definition, as it implies transmission and distribution assets while the term "plant" is used to define generation assets. It would suffice to simply refer to the "DC Supply".
Response: Thank you for your comments. The term "station" is used in a generic sense to apply to either "substation" or "generation station" facilities.		
Xcel Energy	No	We recommend modifying the language to remove circuit breakers altogether: "...through the trip coil(s) of the circuit breakers or other interrupting devices."
Response: Thank you for your comments. The SDT believes that circuit breakers are by far the most prevalent interrupting		

Organization	Yes or No	Question 1 Comment
devices, and to generalize as suggested will lead to industry confusion.		
Allegheny Power	Yes	
American Transmission Company	Yes	
Bonneville Power Administration	Yes	
Clark Public Utilities	Yes	
Dynegy Inc.	Yes	
E.ON U.S.	Yes	
Entergy Services	Yes	
Exelon	Yes	
Indiana Municipal Power Agency	Yes	
Manitoba Hydro	Yes	
MEAG Power	Yes	
Northeast Utilities	Yes	
PacifiCorp	Yes	

Organization	Yes or No	Question 1 Comment
Springfield Utility Board	Yes	
US Bureau of Reclamation	Yes	
We Energies	Yes	
WECC	Yes	
Western Area Power Administration	Yes	
Florida Municipal Power Agency	Yes	Because the definition changes the scope of what a protection system covers, increasing that scope, the definition should not be balloted separately from PRC-005-2 so that the industry knows what is being committed to. For instance, the circuitry connecting the voltage and current sensing devices to the relays is a scope expansion. Station DC supply increases the scope to include the charger, etc. This scope increase needs to have an appropriate implementation period.
Response: Thank you for your comments. When the Board of Trustees was asked to approve an interpretation of PRC-005-1 that was written by the PSMT SDT, the board acknowledged the reliability gap identified by the drafting team caused by the definition of "protection system" and directed that work to close this reliability gap should be given "priority." To close this reliability gap the BOT has directed that revised definition be applied to PRC-005-1 as soon as practical - not years from now. The implementation plan now proposes at least 12 months for entities to apply the new definition to PRC-005-1, and that should give entities time to apply the new definition to PRC-005-1.		
NERC Staff	Yes	Still, to make sure the reference to dc supply is more generic than just "station dc supply," NERC staff suggests the following modified definition of Protection System:"Protective relays, communication systems necessary for correct operation of protective functions, voltage and current sensing inputs to protective relays and associated circuitry from the voltage and current sensing devices, and any dc supply or control circuitry associated with

Organization	Yes or No	Question 1 Comment
		the preceding devices."
Response: Thank you for your comments. The SDT believes that modifying the definition as suggested does not add to the definition.		
FirstEnergy	Yes	1. The definition is ready for ballot with the addition of auxiliary relays to the definition of protective relays. There is a potential for an entity to determine that auxiliary relays do not perform a protection function since they typically do not sense fault current. Furthermore, one could determine that the term "circuitry" only refers to the wiring to connect the various DC devices together. We suggest adding "auxiliary relays necessary for correct operation of protective devices" to improve clarity of the definition. 2. With regard to the change from the current definition phrase "station batteries" to the new definitions phrase "station DC supply", it may not be clear to the reader that this includes battery chargers. To alleviate future interpretation issues, we suggest adding a clarifying statement at the end of the definition, such as "The station DC supply includes the battery, battery charger, and other DC components". 3. The acronym "dc" should be capitalized.
Response: Thank you for your comments. **1. The SDT believes that auxiliary relays are implicitly part of the control circuitry. The Supplementary Reference as posted in June 2010 (Section 15.3, page 22) specifically states that "the dc control circuitry also includes each auxiliary tripping relay …".** **2. Clarifications such as this properly belong in supplementary materials. This is described in the FAQ posted in June 2010 (FAQ II.5.A).** **3. The term, "dc", rather than "DC", reflects the NERC style guide.**		
ReliabilityFirst Corp.	Yes	The definition should probably include interrupting devices as the Protection System is of

Organization	Yes or No	Question 1 Comment
		little value if the fault cannot be interrupted.
Response: Thank you for your comments. Interrupting devices are not within the scope of this project.		
South Carolina Electric and Gas	Yes	The new definition effective date should be directly linked to the approval and implementation schedule of PRC-005-2 to avoid any possible compliance issues under the current PRC-005 standard.
Response: Thank you for your comments. When the Board of Trustees was asked to approve an interpretation of PRC-005-1 that was written by the PSMT SDT, the board acknowledged the reliability gap identified by the drafting team caused by the definition of "protection system" and directed that work to close this reliability gap should be given "priority." To close this reliability gap the BOT has directed that revised definition be applied to PRC-005-1 as soon as practical - not years from now. The implementation plan now proposes at least 12 months for entities to apply the new definition to PRC-005-1, and that should give entities time to apply the new definition to PRC-005-1.		
Ameren	Yes	1. We agree that the definition provides clarity and will enhance the reliability of the Protection Systems to which it is applicable; however, we suggest that a Glossary term for Protective Relay be added in order to clarify in all standards inclusion of relays that measure voltage, current, frequency and/or phase angle to determine anomalies, as stated in PRC-005-2 R1. 2. We believe there should be a direct linkage of the definition's effective date to the approval and implementation schedule of PRC-005-2. Since this new definition is directly linked to the proposed revised standard, it would be premature to make this definition effective prior to the effective date of the new standard. 3. We agree that the voltage and current inputs at the protective relays correctly identifies that component, that this excludes the instrument transformer itself. 4. We suggest replacing "to" with "at", and omitting "and associated circuitry from the voltage and current sensing devices."

Organization	Yes or No	Question 1 Comment
Response: Thank you for your comments. **1. Thank you. "Protective relay" is defined by IEEE and does not have a unique meaning when used in a NERC standard, thus the SDT sees no need to either modify or duplicate that definition.** **2. When the Board of Trustees was asked to approve an interpretation of PRC-005-1 that was written by the PSMT SDT, the board acknowledged the reliability gap identified by the drafting team caused by the definition of "protection system" and directed that work to close this reliability gap should be given "priority." To close this reliability gap the BOT has directed that revised definition be applied to PRC-005-1 as soon as practical - not years from now. The implementation plan now proposes at least 12 months for entities to apply the new definition to PRC-005-1, and that should give entities time to apply the new definition to PRC-005-1.** **3. Based on other industry comments, the SDT has modified the definition to include these devices.** **4. The SDT modified this portion of the definition to state, "voltage and current sensing devices providing inputs to protective relays".**		
SERC Protection and Control Sub-committee (PCS)	Yes	We agree that the definition provides clarity and will enhance the reliability of the Protection Systems to which it is applicable; however, we believe there should be a direct linkage of the definition's effective date to the approval and implementation schedule of PRC-005-2. Since this new definition is directly linked to the proposed revised standard, it would be premature to make this definition effective prior to the effective date of the new standard.
Response: Thank you for your comments. When the Board of Trustees was asked to approve an interpretation of PRC-005-1 that was written by the PSMT SDT, the board acknowledged the reliability gap identified by the drafting team caused by the definition of "protection system" and directed that work to close this reliability gap should be given "priority." To close this reliability gap the BOT has directed that revised definition be applied to PRC-005-1 as soon as practical - not years from now. The implementation plan now proposes at least 12 months for entities to apply the new definition to PRC-005-1, and that should give entities time to apply the new definition to PRC-005-1.		
Southern Company	Yes	We agree that the definition provides clarity and will enhance the reliability of the Protection Systems to which it is applicable. However, we feel that there needs to be a direct linkage

Organization	Yes or No	Question 1 Comment
Transmission		of the definition's effective date to the approval and implementation schedule of PRC-005-2. Since this new definition is directly linked to the proposed revised standard, it would be premature to make this definition effective prior to the effective date of the new standard.
Response: Thank you for your comments. When the Board of Trustees was asked to approve an interpretation of PRC-005-1 that was written by the PSMT SDT, the board acknowledged the reliability gap identified by the drafting team caused by the definition of "protection system" and directed that work to close this reliability gap should be given "priority." To close this reliability gap the BOT has directed that revised definition be applied to PRC-005-1 as soon as practical - not years from now. The implementation plan now proposes at least 12 months for entities to apply the new definition to PRC-005-1, and that should give entities time to apply the new definition to PRC-005-1.		
Santee Cooper	Yes	We agree with the proposed definition. However, the effective date of this definition should be linked to the implementation schedule of PRC-005-2. This definition should not be made effective prior to the new standard.
Response: Thank you for your comments. When the Board of Trustees was asked to approve an interpretation of PRC-005-1 that was written by the PSMT SDT, the board acknowledged the reliability gap identified by the drafting team caused by the definition of "protection system" and directed that work to close this reliability gap should be given "priority." To close this reliability gap the BOT has directed that revised definition be applied to PRC-005-1 as soon as practical - not years from now. The implementation plan now proposes at least 12 months for entities to apply the new definition to PRC-005-1, and that should give entities time to apply the new definition to PRC-005-1.		

2. Do you agree with the implementation plan for the revised definition of Protection System? The implementation plan has two phases – the first phase gives entities at least six months to update their protection system maintenance and testing program; the second phase starts when the protection system maintenance and testing program has been updated and requires implementation of any additional maintenance and testing associated with the program changes by the end of the first complete maintenance and testing cycle described in the entity's revised program. If you disagree with this implementation plan, please explain why.

Summary Consideration: Most commenters felt that the definition and its implementation should be linked to the approval and implementation of the revised standard. The retirement date for the existing definition, in the Implementation Plan, was developed upon advice of NERC Compliance staff and is intended to address a reliability gap caused by the existing definition. When the Board of Trustees was asked to approve an interpretation of PRC-005-1 that was written by the PSMT SDT, the board acknowledged the reliability gap identified by the drafting team caused by the definition of "protection system" and directed that work to close this reliability gap should be given "priority." To close this reliability gap the BOT has directed that revised definition be applied to PRC-005-1 as soon as practical - not years from now.

Additional commenters indicated that a 6-month implementation schedule for modifying their Protection System maintenance and testing program is insufficient. The SDT revised the first phase of the implementation plan to 12-months. The implementation plan now proposes at least 12 months for entities to apply the new definition to PRC-005-1, and that should give entities time to apply the new definition to PRC-005-1.

Organization	Yes or No	Question 2 Comment
WECC		Compliance agrees only if the original "Protection System" definition is in place for the interim implementation period, so that only the changes and or additions to the "Protection System" definition are covered under the proposed implementation plan.
Response: Thank you for your comments. The retirement date for the existing definition, in the Implementation Plan, was developed upon advice of NERC Compliance staff and is intended to address a reliability gap caused by the existing		

Organization	Yes or No	Question 2 Comment
definition.		
Public Service Enterprise Group ("PSEG Companies")	No	1. The draft implementation plan general considerations have a requirement to identify all the protection system components addressed under PRC-005-1 and PRC-005-2 for potential audits while modifying the existing programs. The standard revision will require extensive reviews and possibly add significant amounts of components to the program. This is listed as a requirement without a specific deadline other than supplying the information as part of an audit. If an audit is scheduled or announced early in the implementation period the evidence is required. The requirement for identifying all the components in the implementation process should have a time specified with bases for the starting point. 2. Where additional definition of a protection system scope boundary is determined as a result of the standard revisions, the implementation plan completion requirement should be at the end of next maintenance interval of that added protection system component. There may be situations where additional scope as determined by the additions or revisions to the standard and/or supporting reference material (e.g., an auxiliary contact input in a tripping scheme) would require going back and taking equipment out of service to perform that one check. To keep the maintenance and outage schedules coordinated the new requirements should be at the end of current cycles, not beginning.
Response: Thank you for your comments. **1. The posted implementation plan for the definition specifies that the program be updated by the end of the first calendar quarter six months following regulatory approvals. This establishes the requested schedule for the definition alone. Implementation of PRC-005-2 is discussed in the implementation plan for the standard.** **2. The posted implementation plan for the definition provides for the requested implementation by specifying, "and implement any additional maintenance and testing (required in Requirement R2 of PRC-005-1 – Transmission and Generation Protection System Maintenance and Testing) by the end of the first complete maintenance and testing cycle described in the entity's program description and basis document(s) following establishment of the program changes**		

Organization	Yes or No	Question 2 Comment
resulting from the revised definition".		
Ameren	No	As noted above, the implementation plan should be linked to the approval of PRC-005-2. Since this new definition is directly linked to the proposed revised standard, it would be premature to make this definition effective prior to the effective date of the new standard. Otherwise, entities must address equipment, documentation, work management process, and employee training changes needed for compliance twice within an unreasonably short timeframe. If PRC-005-2 receives regulatory approval in 1st quarter 2011, PSMP implementation along with this revised definition should be effective at the beginning of 2012 to coincide with the calendar year. These nine months will be needed to fully assess and address the necessary maintenance program documentation changes, maintenance system tool revisions, and personnel training needed to incorporate this new definition into our program.
Response: Thank you for your comments. The retirement date for the existing definition, in the Implementation Plan, was developed upon advice of NERC Compliance staff and is intended to address a reliability gap caused by the existing definition. When the Board of Trustees was asked to approve an interpretation of PRC-005-1 that was written by the PSMT SDT, the board acknowledged the reliability gap identified by the drafting team caused by the definition of "protection system" and directed that work to close this reliability gap should be given "priority." To close this reliability gap the BOT has directed that revised definition be applied to PRC-005-1 as soon as practical - not years from now. The implementation plan now proposes at least 12 months for entities to apply the new definition to PRC-005-1, and that should give entities time to apply the new definition to PRC-005-1.		
SERC Protection and Control Sub-committee (PCS)	No	As noted above, the implementation plan should be linked to the approval of PRC-005-2. Since this new definition is directly linked to the proposed revised standard, it would be premature to make this definition effective prior to the effective date of the new standard.
Response: Thank you for your comments. When the Board of Trustees was asked to approve an interpretation of PRC-005-1 that was written by the PSMT SDT, the board acknowledged the reliability gap identified by the drafting team caused by the definition of "protection system" and directed that work to close this reliability gap should be given "priority." To close this		

Organization	Yes or No	Question 2 Comment
reliability gap the BOT has directed that revised definition be applied to PRC-005-1 as soon as practical - not years from now. The implementation plan now proposes at least 12 months for entities to apply the new definition to PRC-005-1, and that should give entities time to apply the new definition to PRC-005-1.		
Florida Municipal Power Agency	No	As stated in response to Question 1, it is inappropriate to change the definition of Protection System for PRC-005-1 and the new definition should wait for the new standard. In all honesty, the new PRC-005-2 lays out the program anyway, so, any change to the definition needs to be accompanied by the commitment associated with that change.
Response: Thank you for your comments. When the Board of Trustees was asked to approve an interpretation of PRC-005-1 that was written by the PSMT SDT, the board acknowledged the reliability gap identified by the drafting team caused by the definition of "protection system" and directed that work to close this reliability gap should be given "priority." To close this reliability gap the BOT has directed that revised definition be applied to PRC-005-1 as soon as practical - not years from now. The implementation plan now proposes at least 12 months for entities to apply the new definition to PRC-005-1, and that should give entities time to apply the new definition to PRC-005-1.		
American Electric Power	No	As written, the implementation plan only specifies a time frame for entities to update their documentation for PRC-005-1 and PRC-005-2 compliance. The implementation plan also needs to give entities a time frame to address any required changes to their documentation for other standards that use the term "Protection System", including but not limited to NUC-001-2, PER-005-1, PRC-001-1, etc.
Response: Thank you for your comments. An assessment of the changes to the definition (posted with the first comment period), relative to the entire body of other NERC Standards using this defined term, determined that the changes are consistent with the other existing uses of the definition, and that no other implementation plan considerations were necessary. No comments were received relative to this assessment.		
American Transmission Company	No	1. ATC does not agree to the implementation plan proposed. While it makes common sense to proceed with R1 prior to proceeding with implementing R2, R3, and R4, the timeline to be compliant for R1 is too short. It will take a considerable amount of

Organization	Yes or No	Question 2 Comment
		resources to migrate the maintenance plan from today's standard to the new standard in phase one. ATC recommends that time to develop and update the revised program be increased to at least one year followed by a transition time for the entity to collect all the necessary field data for the protection system within its first full cycle of testing. (In ATC's case would be 6 years) To address phase two, ATC believes human and technological resources will be overburdened to implement this revised standard as written. The transition to implementing the new program will take another full testing cycle once the program has been updated. Increased documentation and obtaining additional resources to accomplish this will be challenging. 2. Implementation of PRC-005-2 will impact ATC in the following manner: a. Increase costs: double existing maintenance costs. b. Since there will be a doubling of human interaction (or more), it is expected that failures due to human error will increase, possibly proportionately. c. Breaker maintenance may need to be aligned with protection scheme testing, which will always contain elements that are include in the non-monitored table for 6 yr testing. d. ATC is developing standards for redundant bus and transformer protection schemes. This would allow ATC to test the protection packages without taking the equipment out of service. Further if one system fails, there is full redundancy available. With the current version of PRC-005-2, ATC would need to take an outage to test the protection schemes for a transformer or a bus, there is not an incentive to install redundant schemes. ATC is working with a condition based breaker maintenance program. This program's value would be greatly diminished under PRC-005-2 as currently written. 3. Consideration also needs to be given for other NERC standards expected to be passed and in the implementation stage at the same time, such as the CIP standards.

Response: Thank you for your comments.

1. **This comment appears to address implementation of the draft Standard, not the definition.**
2. **This comment appears to address implementation of the draft Standard, not the definition.**

Organization	Yes or No	Question 2 Comment
3. Thank you.		
Duke Energy	No	Definition should be implemented concurrently with PRC-005-2.
Response: Thank you for your comments. When the Board of Trustees was asked to approve an interpretation of PRC-005-1 that was written by the PSMT SDT, the board acknowledged the reliability gap identified by the drafting team caused by the definition of "protection system" and directed that work to close this reliability gap should be given "priority." To close this reliability gap the BOT has directed that revised definition be applied to PRC-005-1 as soon as practical - not years from now. The implementation plan now proposes at least 12 months for entities to apply the new definition to PRC-005-1, and that should give entities time to apply the new definition to PRC-005-1.		
Consumers Energy Company	No	For entities that may not have included all elements reflected in the modified definition within their PRC-005-1 program, 6-months following regulatory approvals may not be sufficient to identify all relevant additional components, develop maintenance procedures, develop maintenance and testing intervals, develop a defendable technical basis for both the procedures and intervals, and train personnel on the newly implemented items. We propose that a 12-month schedule following regulatory approvals may be more practical.
Response: Thank you for your comments. The Implementation Plan has been modified to allow a 12-month schedule as suggested. However, to agree with the SDT Guidelines established by NERC, "end of the first calendar quarter" was modified to "first day of the first calendar quarter".		
Exelon	No	PECO would like to have the implementation plan provide at least 1 year for full implementation of the new standard. This will provide adequate time for development of documentation, training for all personnel, and testing then implementation of the new process(es).
Response: Thank you for your comments. The Implementation Plan has been modified to allow a 12-month schedule as suggested. However, to agree with the SDT Guidelines established by NERC, "end of the first calendar quarter" was modified to "first day of the first calendar quarter".		

Organization	Yes or No	Question 2 Comment
Progress Energy Carolinas	No	Progress Energy does not believe that the definition should be implemented separately from and prior to the implementation of PRC-005-2. We believe there should be a direct linkage between the definition's effective date to the approval and implementation schedule of PRC-005-2. Since this new definition should be directly linked to the proposed revised standard, it would be premature to make this new definition effective prior to the effective date of the new standard. We believe that changes to the maintenance program should be driven by the revision of the PRC standard, not by the revision of a definition.
Response: Thank you for your comments. When the Board of Trustees was asked to approve an interpretation of PRC-005-1 that was written by the PSMT SDT, the board acknowledged the reliability gap identified by the drafting team caused by the definition of "protection system" and directed that work to close this reliability gap should be given "priority." To close this reliability gap the BOT has directed that revised definition be applied to PRC-005-1 as soon as practical - not years from now. The implementation plan now proposes at least 12 months for entities to apply the new definition to PRC-005-1, and that should give entities time to apply the new definition to PRC-005-1.		
Pepco Holdings, Inc. - Affiliates	No	The 6 month time frame to update the revised maintenance and testing program is too short. Specifically identifying and documenting each component not presently individually identified in our maintenance databases, auxiliary relays, lock-out relays, etc. will require a major effort. We recommend at least one year.
Response: Thank you for your comments. The Implementation Plan has been modified to allow a 12-month schedule as suggested. However, to agree with the SDT Guidelines established by NERC, "end of the first calendar quarter" was modified to "first day of the first calendar quarter".		
Indeck Energy Services	No	The definition should not be implemented separate from PRC-002-2. The PRC-002-2 implementation plan would be adequate.
Response: Thank you for your comments. When the Board of Trustees was asked to approve an interpretation of PRC-005-1 that was written by the PSMT SDT, the board acknowledged the reliability gap identified by the drafting team caused by the definition of "protection system" and directed that work to close this reliability gap should be given "priority." To close this		

Organization	Yes or No	Question 2 Comment
reliability gap the BOT has directed that revised definition be applied to PRC-005-1 as soon as practical - not years from now. The implementation plan now proposes at least 12 months for entities to apply the new definition to PRC-005-1, and that should give entities time to apply the new definition to PRC-005-1.		
E.ON U.S.	No	The first phase is only 3 months (per Implementation Plan) to update the program, not the 6 months as listed in this question. E.ON U.S. recommends that it should be a minimum of 6 months, regardless.
Response: Thank you for your comments. The Implementation Plan for the definition specifically indicated a 6-month (increased to 12-months in response to comments) implementation schedule to update the program. However, to agree with the SDT Guidelines established by NERC, "end of the first calendar quarter" was modified to "first day of the first calendar quarter".		
Santee Cooper	No	The implementation plan should be linked to the approval of PRC-005-2. The definition should not be made effective prior to the new standard.
Response: Thank you for your comments. When the Board of Trustees was asked to approve an interpretation of PRC-005-1 that was written by the PSMT SDT, the board acknowledged the reliability gap identified by the drafting team caused by the definition of "protection system" and directed that work to close this reliability gap should be given "priority." To close this reliability gap the BOT has directed that revised definition be applied to PRC-005-1 as soon as practical - not years from now. The implementation plan now proposes at least 12 months for entities to apply the new definition to PRC-005-1, and that should give entities time to apply the new definition to PRC-005-1.		
Xcel Energy	No	1. The implementation plans for both the definition and standard are confusing. Does this imply a "clean slate" approach can be used? i.e. do entities have up to the first interval window to complete the maintenance or must they have it complete on day 1 of the standard and again by the first interval? 2. It also appears that the implementation plans are conflicting whereby one requires full compliance and the other allows 6 months...the definition implementation plan also refer

Organization	Yes or No	Question 2 Comment
		to a basis document though the standard does not require one.
Response: Thank you for your comments. **1. The implementation plan for the definition specifically states that the entity has until the end of the first full interval established per their program and basis documents to implement the updated program (i.e. complete the maintenance).** **2. The Implementation Plan for the definition specifically indicated a 6-month (increased to 12-months in response to comments) implementation schedule to update the program. However, to agree with the SDT Guidelines established by NERC, "end of the first calendar quarter" was modified to "first day of the first calendar quarter". PRC-005-1 requires basis documents, where PRC-005-2 (draft) does not, as maximum intervals and minimum activities are prescribed within the standard.**		
Manitoba Hydro	No	The proposed implementation stage of 6 months is much too stringent and an 18 month window is suggested.
Response: Thank you for your comments. The Implementation Plan has been modified to allow a 12-month schedule. However, to agree with the SDT Guidelines established by NERC, "end of the first calendar quarter" was modified to "first day of the first calendar quarter".		
MidAmerican Energy Company	No	The protection system definition implementation plan should be consistent with the implementation plan of PRC-005-2 R1. Actual maintenance requirements implementation should be as required by the PRC-005-2 implementation plan and should not be included in the implementation plan for the protection system definition.
Response: Thank you for your comments.		
Southern Company Transmission	No	The revised definition should not be made effective until the revised PRC-005-2 is in effect. There is no definite reliability benefit to balloting this definition prior to the revised standard. If balloted and approved, entities would definitely have to modify their Protection System Maintenance and Testing Program methodology, but there is no obligation to or guarantee

Organization	Yes or No	Question 2 Comment
		of any additional maintenance being performed. PRC-005-2 includes this definition, the maintenance activities, and the intervals that will ensure execution of the maintenance and testing.
Response: Thank you for your comments. When the Board of Trustees was asked to approve an interpretation of PRC-005-1 that was written by the PSMT SDT, the board acknowledged the reliability gap identified by the drafting team caused by the definition of "protection system" and directed that work to close this reliability gap should be given "priority." To close this reliability gap the BOT has directed that revised definition be applied to PRC-005-1 as soon as practical - not years from now. The implementation plan now proposes at least 12 months for entities to apply the new definition to PRC-005-1, and that should give entities time to apply the new definition to PRC-005-1.		
Indiana Municipal Power Agency	No	The second part of the implementation effective date does not make sense and might be wrong. The second part talks about implementing any additional maintenance and testing (required in R2 of PRC-005-1- Transmission and Generation Protection system Maintenance and Testing); this is referring to version 1 of the standard and there should be no additional maintenance and testing added from version 1 of the standard, just version 2 which is the new version. Overall, the wording on this implementation plan needs to be made more clear about how the implementation plan will work.
Response: Thank you for your comments. The second part of the implementation plan for the definition allows the entity to implement any program changes that result from the modified definition systematically via the intervals establised to address those changes. The SDT believes that this portion of the implementation plan is clear.		
US Bureau of Reclamation	No	The Time Horizons are too narrow for the implementation of the standard as written. The SDT appears to have not accounted for the data analysis associated with performance based systems. The data collection, analysis, and subsequent decisions associated development of a maintenance program and its justification do not occur overnight especially with larger utilities. In addition, this new standard will require complete rewrite of an entities internal maintenance programs. The internal processes associated with these vary based on the size of the entity and its organizational structure. Since this standard is

Organization	Yes or No	Question 2 Comment
		so invasive into the internal decisions concerning maintenance, the standard should allow at least 18 months for entities to rewrite their internal maintenance programs to meet the program development requirements and 18 months to train the staff in the new program, incorporate the program into the entities compliance processes, and to implement the new program.
Response: Thank you for your comments. The Implementation Plan has been modified to allow a 12-month schedule to update the entities' program in accoradnce with the modified definition.		
Hydro One	No	1. The time provided for the first phase "at least six months" is too open ended and does not give entities a clear timeline. HYDRO ONE suggests 1 year for the first phase. 2. Also, HYDRO ONE suggests phasing out the second phase in stages.
Response: Thank you for your comments. **1. The Implementation Plan has been modified to allow a 12-month schedule as suggested. However, to agree with the SDT Guidelines established by NERC, "end of the first calendar quarter" was modified to "first day of the first calendar quarter".** **2. The SDT does not understand this comment.**		
Long Island Power Authority	No	1. The time provided for the first phase "at least six months" is too open ended and does not give entities a clear timeline. LIPA suggests 1 year for the first phase. 2. It is also suggested phasing out the second phase in stages.
Response: Thank you for your comments. **1. The Implementation Plan has been modified to allow a 12-month schedule as suggested. However, to agree with the SDT Guidelines established by NERC, "end of the first calendar quarter" was modified to "first day of the first calendar quarter".**		

Organization	Yes or No	Question 2 Comment
2. The SDT does not understand this comment.		
Northeast Power Coordinating Council	No	1. The time provided for the first phase "at least six months" is too open ended and does not give entities a clear timeline. Suggest 1 year for the first phase. 2. Suggest phasing out the second phase in stages.
Response: Thank you for your comments. **1. The Implementation Plan has been modified to allow a 12-month schedule as suggested. However, to agree with the SDT Guidelines established by NERC, "end of the first calendar quarter" was modified to "first day of the first calendar quarter".** **2. The SDT does not understand this comment.**		
Northeast Utilities	No	The time provided for the first phase "at least six months" is too open ended and does not give entities a clear timeline. Northeast Utilities suggests 1 year for the first phase.
Response: Thank you for your comments. The Implementation Plan has been modified to allow a 12-month schedule as suggested. However, to agree with the SDT Guidelines established by NERC, "end of the first calendar quarter" was modified to "first day of the first calendar quarter".		
Grant County PUD	No	There needs to be more clarity concerning the role of the 3 year audit during the implementation phase. Do the audit tests consist of varying proportions of -1 criteria and -2 criteria?
Response: Thank you for your comments. This comment appears to address implementation of the revised standard, not the revised definition.		
Constellation Power Generation	No	This does not match the implementation proposed for PRC-005-2. The implementation plan for revising the program is 6 months based on the "definition implementation" but R1 in

Organization	Yes or No	Question 2 Comment
		PRC-005-2 has a 3 month implementation plan.
Response: Thank you for your comments. The intent is to implement the definition and apply it to PRC-005-1 before PRC-005-2 becomes effective. When the Board of Trustees was asked to approve an interpretation of PRC-005-1 that was written by the PSMT SDT, the board acknowledged the reliability gap identified by the drafting team caused by the definition of "protection system" and directed that work to close this reliability gap should be given "priority." To close this reliability gap the BOT has directed that revised definition be applied to PRC-005-1 as soon as practical - not years from now. The implementation plan now proposes at least 12 months for entities to apply the new definition to PRC-005-1, and that should give entities time to apply the new definition to PRC-005-1.		
The Detroit Edison Company	No	This implementation plan and the one for PRC-005-2 should be consistent.
Response: Thank you for your comments. The intent is to implement the definition and apply it to PRC-005-1 before PRC-005-2 becomes effective. When the Board of Trustees was asked to approve an interpretation of PRC-005-1 that was written by the PSMT SDT, the board acknowledged the reliability gap identified by the drafting team caused by the definition of "protection system" and directed that work to close this reliability gap should be given "priority." To close this reliability gap the BOT has directed that revised definition be applied to PRC-005-1 as soon as practical - not years from now. The implementation plan now proposes at least 12 months for entities to apply the new definition to PRC-005-1, and that should give entities time to apply the new definition to PRC-005-1.		
Entergy Services	No	1. We agree with the definition, however we do not agree with the implementation plan. We believe implementation of the definition needs to coincide with the implementation of Standard PRC-005-2. To do otherwise, will cause entities to address equipment, documentation, work management process, and employee training changes needed for compliance twice within an unreasonably short timeframe. 2. Additional time, 12 months minimum, will be needed to fully assess and address the necessary maintenance program documentation changes, maintenance system tool revisions, and personnel training needed to incorporate this new definition into our

Organization	Yes or No	Question 2 Comment
		program.
Response: Thank you for your comments. **1. When the Board of Trustees was asked to approve an interpretation of PRC-005-1 that was written by the PSMT SDT, the board acknowledged the reliability gap identified by the drafting team caused by the definition of "protection system" and directed that work to close this reliability gap should be given "priority." To close this reliability gap the BOT has directed that revised definition be applied to PRC-005-1 as soon as practical - not years from now. The implementation plan now proposes at least 12 months for entities to apply the new definition to PRC-005-1, and that should give entities time to apply the new definition to PRC-005-1.** **2. The Implementation Plan for the definition has been modified to allow a 12-month schedule as suggested. However, to agree with the SDT Guidelines established by NERC, "end of the first calendar quarter" was modified to "first day of the first calendar quarter".**		
Clark Public Utilities	No	1. While the drafting team has done a great job of simplifying the implementation plan from the original draft 1 language, the current language has some ambiguities. I do not understand what the term "the end of the first calendar quarter six months following regulatory approvals" means. What is wrong with just saying "within nine months (or six months or twelve months) following regulatory approvals? Using the current language I would be inclined to assume it is six months so I can avoid a dispute (and quite possibly a notice of alleged violation) over a date. 2. Also, I am not sure what the term "the end of the first complete maintenance and testing cycle described in the entity's program description" means. It is quite likely that a registered entity will make the required definition change to its maintenance program (at approximately six months) and wind up with devices that need to be tested. Is the implementation plan attempting to provide some allowed time delay so the registered entity will not be out of compliance even though it has devices that are now beyond the maximum testing interval due to the definition change? The existing language implies that within approximately six months of regulatory approval, the maintenance program needs to be changed to incorporate the revised definition for Protection System.

Organization	Yes or No	Question 2 Comment
		However, the effective date for the revised maintenance program is going to be some date that corresponds with the end of the first complete maintenance and testing cycle in that program. I really don't understand what that time period is and I believe the drafting team needs to put in something that clears up this confusion. By testing cycle do you mean "maximum interval" as shown in the PRC-005 table? Do you mean the "maximum interval" that a registered entity includes in their maintenance program? If so, do you intend the implementation to be a different date for protection devices depending on the maximum testing interval? Or do you envision some date beyond the six months where the entire maintenance program (with the definition change) becomes effective and any registered entities with out-of-compliance issues would need to file mitigation plans?
Response: Thank you for your comments. **1. Within the US, NERC Standards are not mandatory and enforceable until approval by FERC. As established within the NERC Drafting Team Guidelines, the effective dates must be "the first day of the first calendar quarter after entities are expected to be compliant". The effective dates are always on the first day of a calendar quarter to make it easier for entities to track the effective dates of requirements. To agree with the SDT Guidelines established by NERC, "end of the first calendar quarter" was modified to "first day of the first calendar quarter".** **2. Continuing on the example above, if an entity then establishes a 3-calendar-year schedule for additional components as addressed by the definition, the entity must be fully compliant by the end of 2014.**		
We Energies	No	Wisconsin Electric does not agree with the six-month implementation requirement in the first phase. It is our position that a longer adjustment time is needed for entities to update their maintenance programs to implement the new definition. The new definition results in a significant increase in the scope of affected equipment and the documentation required to implement the program, and requires additional resources beyond present levels, including hiring and training. We estimate that this effort will require three years to fully implement.
Response: Thank you for your comments. The Implementation Plan for the definition has been modified to allow a 12-month		

Organization	Yes or No	Question 2 Comment
schedule to update the program. The entity then has the full interval as established within their program to implement the program for added components.		
Allegheny Power	Yes	
Arizona Public Service Company	Yes	
Avista Corp	Yes	
Bonneville Power Administration	Yes	
Dynegy Inc.	Yes	
FirstEnergy	Yes	
Lincoln Electric System	Yes	
MEAG Power	Yes	
NERC Staff	Yes	
Pacific Northwest Small Public Power Utility Comment Group	Yes	
PacifiCorp	Yes	
PNGC Power	Yes	

Organization	Yes or No	Question 2 Comment
ReliabilityFirst Corp.	Yes	
South Carolina Electric and Gas	Yes	
Springfield Utility Board	Yes	
Western Area Power Administration	Yes	
Y-W Electric Association, Inc	Yes	

NERC
NORTH AMERICAN ELECTRIC
RELIABILITY CORPORATION

Consideration of Comments on Non-binding Poll of VRFs and VSLs associated with PRC-005-2 – Protection System Maintenance

The PRC-005 Standard Drafting Team thanks all those who participated in non-binding poll for the VRFs and VSLs associated with PRC-005-2. The initial non-binding poll was conducted from July 8 through July 17, 2010 and achieved a quorum with 85.96 % of the ballot pool members returning an opinion, and with 32.29 % of those indicating support for the proposed VRFs and VSLs.

Many commenters proposed that the VSLs allow for some amount of non-compliance with the Standard before incurring a violation. NERC's guidelines for VSLs do not allow some level of non-performance without being in violation. The SDT did, however, modify the VSLs for Requirements R1 and R4 to provide gradated VSLs.

Some commenters suggested the SDT re-evaluate the VRF assignments. The SDT reconsidered the VRFs in accordance with the guidance provided by NERC and FERC, and modified the Standard to assign the VRFs as R1 – Medium, R2 – Medium, R3 – Medium, and R4 – High. Some commenters made comments that appeared to be related to the technical content of the Standard, not to the VRFs or VSLs and these comments were addressed in the report containing responses to comments on the standard. All comments submitted have been publicly posted on the following web page:

http://www.nerc.com/filez/standards/Protection_System_Maintenance_Project_2007-17.html

If you feel that your comment has been overlooked, please let us know immediately. Our goal is to give every comment serious consideration in this process! If you feel there has been an error or omission, you can contact the Vice President and Director of Standards, Herbert Schrayshuen, at 609-452-8060 or at herb.schrayshuen@nerc.net. In addition, there is a NERC Reliability Standards Appeals Process.[1]

[1] The appeals process is in the Reliability Standards Development Procedures: http://www.nerc.com/standards/newstandardsprocess.html.

Segment:	3, 4, 5
Organization:	Cowlitz County PUD
Member:	Russell A Noble, Rick Syring, Bob Essex
Comment:	Cowlitz does not understand a High VRF designation for requirement R1; this should be a Low or Medium designation. R1 is merely covering a maintenance program, not the actual maintenance. Actual missed maintenance of components (requirement R4) should have the Medium or High VRF. This Standard is very descriptive of minimum maintenance intervals on each "component;" thus, it is possible to have maintenance documentation that is in full compliance once the Program is built around it. It should never be a case where an entity can receive a higher VRF over missing documentation of a process, and then a lower VRF over missing documentation of the implementation of the process.
Response:	The SDT has reconsidered the VRFs in accordance with the guidance provided by NERC and FERC, and the Standard has been modified to assign the VRFs as R1 – Medium, R2 – Medium, R3 – Medium, and R4 – High.
Segment:	1
Organization:	United Illuminating Co.
Member:	Jonathan Appelbaum
Comment:	The VRF for R1 should be Low. It is administrative to create an inventory list. If R1 failed to be executed but the other requirements wee executed fully then the BES would be properly secured. Compare this against the scenario of performing R1 but failing to perform the other tasks; in which case the BES is at risk. UI recognizes that the SDT considers the inventory as the foundation of the PSMP but it is not the element of the PSMP that provides for the level of reliability sought. R1 should be VRF Low and R2 thru R4 VRF is Medium. UI agrees with the Time Horizon.
Response:	The SDT has reconsidered the VRFs in accordance with the guidance provided by NERC and FERC, and the Standard has been modified to assign the VRFs as R1 – Medium, R2 – Medium, R3 – Medium, and R4 – High.

Segment:	1, 3, 4, 5, 6
Organization:	FirstEnergy Energy Delivery, FirstEnergy Solutions, Ohio Edison Company, FirstEnergy Solutions, FirstEnergy Solutions
Member:	Robert Martinko, Kevin Querry, Douglas Hohlbaugh, Kenneth Dresner, Mark S Travaglianti
Comment:	FirstEnergy appreciates the hard work of the drafting team, but unfortunately we must cast a Negative vote for the VRF for Requirement R1. Although we agree that Requirement 1 is important because it establishes a sound PSMP, a HIGH VRF assignment is not appropriate and it should be changed to LOWER. By definition, a requirement with a LOWER VRF is administrative in nature, and documentation of a program is administrative. Assigning a LOWER VRF to R1 is more logical since R4, which is the requirement to implement the PSMP, is assigned a MEDIUM VRF because, if violated, it could directly affect the electrical state or the capability of the bulk electric system.
Response:	The SDT has reconsidered the VRFs in accordance with the guidance provided by NERC and FERC, and the Standard has been modified to assign the VRFs as R1 – Medium, R2 – Medium, R3 – Medium, and R4 – High.
Segment:	1
Organization:	Ameren Services
Member:	Kirit S. Shah
Comment:	The Lower VSL for all Requirements should begin above 1% of the components.
Response:	The NERC criteria for VSLs do not currently permit them to allow some level of non-performance without being in violation.
Segment:	5
Organization:	Constellation Power Source Generation, Inc.
Member:	Amir Y Hammad
Comment:	In general, the VSLs are completely biased against small generating facilities that may have only 20 or 30 components to their protective system. If a facility with only 30 components were to fail to identify 2 components, then that would automatically fall under a moderate VSL. This is true for R1 and R4. A suggestion would be to eliminate the percentage of components and instead focus on what the violation is. For example, for R1, a lower VSL could state “the entity’s PSMP includes all of the ‘types’ of components included in the definition of ‘Protection System’, but failed to specify whether a component is being addressed

	by time-based, condition-based, or performance-based maintenance.
Response:	The SDT believes the stepped VSLs are not biased against small entities.
Segment:	5
Organization:	Liberty Electric Power LLC
Member:	Daniel Duff
Comment:	Voting no due to a no vote on the standard, as well as a disagreement with the percentage concept. Smaller entities will have a higher violation level for the same offense due to fewer chances for a violation.
Response:	The SDT believes the stepped VSLs are not biased against small entities.
Segment:	5, 6
Organization:	Tennessee Valley Authority
Member:	George T. Ballew, Marjorie S. Parsons
Comment:	The reason for the no vote on the Non-Binding Poll for VRFs and VSLs is the Violation Severity Level Table listing for Requirement R4 lists the following under “Severe VSL”. “Entity has failed to initiate resolution of maintenance-correctable issues” The threshold for a Severe Violation in this case is too broad and too subjective. The threshold needs to be clearly defined with low, medium, and high criteria. This feedback has been added to the NERC Standards Under Development Comment webpage.
Response:	The VSL for Requirement R4 has been modified to provide a stepped VSL for initiation of resolution of maintenance correctable issues.
Segment:	1
Organization:	Duke Energy Carolina
Member:	Douglas E. Hils
Comment:	We appreciate the work of the team however we do not agree with some of the text proposed. The VSLs for PRC-005-2 requirements R1, R2 and R4 have significantly tighter percentages than the corresponding requirements in PRC-005-1. We believe that the Lower VSL should be up to 10%, the Moderate VSL should be 10%-15%, the High VSL should be 15% to 20%, and the Severe VSL should be greater than 20%, which is still a lower percentage than

	the 25% Lower VSL currently in PRC-005-1.
Response:	The percentages for the stepped VSLs were established in accordance with the NERC VSL Guidelines which were in turn established pursuant to the FERC VSL Order. The current approved PRC-005-1 preceded these guidelines, and therefore is not in accordance with them.
Segment:	5
Organization:	U.S. Bureau of Reclamation
Member:	Martin Bauer
Comment:	The intervals in the standard are based on the weighted average practice of entities surveyed. The weighted average practice was the result of a requirement to have a documented program. The intervals did not have demonstrated relationship to reliability of the BES. This nullifies the requirements and subsequent VSL's. 1. The VSL's use terms that are not tied back to a requirement and appear to be based on the concept that every component will cause an impact on the BES. The VSL's use the term "countable event" to score the VSL; however, there is no requirement associated with the number of "countable events". 2. The VSL's should allow for minor gaps in maintenance documentation where there is no impact to the BES if the component failed.
Response:	1. The SDT disagrees that the VSLs are not tied back to a requirement. R3 refers to Attachment A for the criteria for a performance based program, which establishes criteria for the percentage of countable events allowed for the components in any specific designated segment. 2. “Minor gaps in maintenance documentation” would seem to be within the description of a Lower VSL; the NERC criteria for VSLs do not currently permit them to allow some “gaps” without being in violation. The VSL for Requirement R4 has been modified to provide a stepped VSL for initiation of resolution of maintenance correctable issues.
Segment:	1
Organization:	Georgia Transmission Corporation
Member:	Harold Taylor, II
Comment:	1. As the current requirements are written in R1 of PRC-005-2 Draft, we disagree with the terms identify all Protection System components. We recommend a less prescriptive requirement as listed below. R1.1 Identify BES substations or facilities containing Protection Systems.

	R1.2 Identify whether Protection Systems per substation or facilities are addressed through time-based, condition-based, performance based or a combination based etc. R1.3 For each substation/facility with Protection Systems, include all maintenance activities etc. 2. The VRF for R1 ranking should be lower or no greater than R2, R3, and R4. The task of identifying Protection System components has very little to do with increasing reliability of the BES. The implementation of the PSMP most likely will cover all the specific functions of Protection System components although the entity failed to identify all PS components. 3. We recommend the above language changes and agree the requirement adds some value but not a high-risk value to the BES. After correcting the language we feel that a requirement of 100% maintenance on 100% of all components as listed on page 6 of the standard for the VSLs leaves no room for error for systems designed with contingences. The violations should start for more than a level of 5% not identified, not maintained, etc.
Response:	1. This appears to be a comment related to the standard content, not the VRFs and VSLs. 2. The SDT has reconsidered the VRFs in accordance with the guidance provided by NERC and FERC, and the Standard has been modified to assign the VRFs as R1 – Medium, R2 – Medium, R3 – Medium, and R4 – High. 3. The NERC criteria for VSLs do not currently permit them to allow some level of non-performance without being in violation.
Segment:	1, 3
Organization:	National Grid, Niagara Mohawk (National Grid Company)
Member:	Saurabh Saksena, Michael Schiavone
Comment:	National Grid does not support the VSL criteria based on "total number of components". Calculating total number of components will be hugely costly and does not enhance any reliability. It will also take away the much needed resources required for maintenance.
Response:	The SDT believes establishing multiple levels within the VSL is preferable to assigning only a Severe VSL; consequently, a method of measuring relative performance must exist, and determining the quantity of components is a necessity.
Segment:	1, 3, 3, 3, 3, 5
Organization:	Southern Company Services, Inc., Georgia Power Company, Gulf Power Company, Mississippi Power,

	Alabama Power Company, Southern Company Generation
Member:	Horace Stephen Williamson, Anthony L Wilson, Gwen S Frazier, Don Horsley, Richard J. Mandes, William D Shultz
Comment:	If an entity is not able to reasonably quantify which components are in scope, demonstrating compliance on a percent-basis may prove difficult or impossible. Further review may indicate the need to reformat the VSL.
Response:	The SDT believes establishing multiple levels within the VSL is preferable to assigning only a Severe VSL; consequently, a method of measuring relative performance must exist, and determining the quantity of components is a necessity.
Segment:	3
Organization:	Allegheny Power
Member:	Bob Reeping
Comment:	The draft standard expects 100% compliance for millions of protection system components at all times. The standard should consider a statistically based performance metric instead of a performance target that expects 100% compliance.
Response:	The SDT shares your concerns regarding the Lower VSL portion of the stepped VSLs not providing any tolerance for non-conformance without being non-compliant. However, the VSL Guidelines, which conform to the FERC VSL order, specify that Lower shall be “5% or less.”
Segment:	5
Organization:	AEP Service Corp.
Member:	Brock Ondayko
Comment:	AEP has stated in other projects, setting a VSL at “Severe” for a binary outcome could be challenged as being arbitrary and another level should be used as the starting point.
Response:	The NERC VSL Guidelines, which were established pursuant to the FERC VSL Order, specify that Severe VSLs be assigned for binary outcomes.
Segment:	3, 4
Organization:	Georgia System Operations Corporation
Member:	R Scott S. Barfield-McGinnis, Guy Andrews

Comment:	1. Do not agree with the 3 calendar months interval and suggest using quarterly. Both terms require a minimum of four inspections per year have proven to be successful, but the term "quarterly" provides a bit more flexibility than the term "3 calendar months". Given a 3 month maximum interval an entity would need to schedule these tasks every 2 months. As the current requirements are written in R1 of PRC-005-2 Draft, we disagree with the terms identify all Protection System components. We recommend a less prescriptive requirement as listed below. -R1.1 Identify BES substations or facilities containing Protection Systems. -R1.2 Identify whether Protection Systems per substation or facilities are addressed through time-based, condition-based, performance based or a combination based etc. -R1.3 For each substation/facility with Protection Systems include all maintenance activities etc. 2. The VRF for R1 ranking should be lower or no greater than R2, R3, and R4. The task of identifying Protection System components has very little to do with increasing reliability of the BES. The implementation of the PSMP most likely will cover all the specific functions of Protection System components although the entity failed to identify all PS components. We recommend the above language changes and agree the requirement adds some value but not a high-risk value to the BES. 2. After correcting the language we feel that a requirement of 100% maintenance on 100% of all components as listed on page 6 of the standard for the VSLs leaves no room for error for systems designed with contingences. 3. The violations should start for more than a level of 5% not identified, not maintained, etc. Listing each individual Protection System component as current draft is onerous and impedes any interpretation of application with very little value. 4. The standard as written will require a great deal of effort by the utilities to maintain 100% compliance as listed. The concern is the power system design allows for some contingencies but the standard allows for no errors. Failing to complete 1% of the maintenance by 1 day infers an entity is out of compliance or in violation. 5. The violations should start for more than a level of 5% not identified, or not maintained. We feel the minor changes of wording as described in R1.1 – R1.3 as listed above will go a long way in removing the concerns of the standard. We feel the intent of the standard is sound and request minor changes to facilitate an interpretable standard that sensibly mitigates problems with the BES. As the standard written, the

	interpretation seems to create a stringent environment with undue compliance requirements. 6. Lastly, the SDT should attempt to embrace Gerry Cauley's vision of "results-based standards" and clearly identify the "risk mitigation objectives, reliability result or outcome" of the revised requirements and allow each entity to meet the outcome and mitigate the risk without writing in such a prescriptive manner which is not preferred. The prescriptive details currently proposed in the standard could then be captured in a reference document.
Response:	1. This comment appears be related to the technical content of the standard and not on the VRFs or VSLs. 2. The SDT has reconsidered the VRFs in accordance with the guidance provided by NERC and FERC, and the Standard has been modified to assign the VRFs as R1 – Medium, R2 – Medium, R3 – Medium, and R4 – High. 3. The NERC criteria for VSLs do not currently permit them to allow some level of non-performance without being in violation. 4. The NERC criteria for VSLs do not currently permit them to allow some level of non-performance without being in violation. 5. The SDT believes establishing multiple levels within the VSL is preferable to assigning only a Severe VSL; consequently, a method of measuring relative performance must exist, and determining the quantity of components is a necessity. 6. This comment appears to be related to the standard itself, not to the VRFs or VSLs.
Segment:	1
Organization:	Tennessee Valley Authority
Member:	Larry Akens
Comment:	The VSL Table listing for Requirement R4 list the following under Severe VSL: "Entity has failed to initiate resolution of maintenance-correctable issues" The threshold for a Severe Violation in this case is too broad and too subjective. The threshold needs to be clearly defined with low, medium, and high criteria.
Response:	The VSL for Requirement R4 has been modified to provide a stepped VSL for initiation of resolution of maintenance correctable issues.
Segment:	3, 5, 6
Organization:	Entergy, Entergy Corporation, Entergy Services, Inc.
Member:	Joel T Plessinger, Stanley M Jaskot, Terri F Benoit

Comment:	Entergy provides the following reasons for our Negative Ballot. Entergy reserves the right, after review of all the submitted ballots, to join with other balloters, whether positive or negative ballots, where any reasons included in their ballot that may be applicable to or otherwise impact Entergy as related to this ballot. 1. The VSLs for R1 is "Failure to specify whether a component is being addressed by time-based, condition-based, or performance-based maintenance" by itself is a documentation issue and not an equipment maintenance issue. We recommend this warrants only a Lower VSL, especially when one of the required components can only be time based. 2. We also recommend the VSLs for R4 be revised to be stepped from Lower to Severe for "Entity has failed to initiate resolution of maintenance-correctable issues". While we understand the importance of addressing a correctable issue, it seems like there should be some allowance for an isolated unintentional failure to address a correctable issue. If possible, consider the potential impact to the system. For example, a failure to address a pilot scheme correctable issue for an entity that only employs pilot schemes for system stability applications should not necessarily have the same VSL consequence as an entity which employs pilot schemes everywhere on their system as a standard practice.
Response:	1. This portion of the VSL for Requirement R1 has been modified to provide a stepped VSL relating to the number of Component Types that are not addressed by time-based, condition-based, or performance-based maintenance. 2. The VSL for Requirement R4 has been modified to provide a stepped VSL for initiation of resolution of maintenance correctable issues.
Segment:	1
Organization:	Pacific Gas and Electric Company
Member:	Chifong L. Thomas
Comment:	We cannot vote affirmative on the VRFs and VSLs until concerns on the proposed standard have been addressed.
Response:	Thank you.
Segment:	1, 3
Organization:	Platte River Power Authority
Member:	John C. Collins, Terry L Baker

Comment:	Because of the recommended NO vote on the standard, it would not make sense to approve the proposed VRFs and VSLs until such time the requirements of the standard are clarified.
Response:	Thank you.
Segment:	1
Organization:	Public Service Company of New Mexico
Member:	Laurie Williams
Comment:	Because of the NO vote on the standard, it would not make sense to approve the proposed VRFs and VSLs until such time that the requirements of the standard are clarified.
Response:	Thank you.
Segment:	1
Organization:	Xcel Energy, Inc.
Member:	Gregory L Pieper
Comment:	Xcel Energy believes the standard still contains many aspects that are not clearly understood by entities, including what is needed to demonstrate a compliant PSMP. Comments have been submitted concurrently to NERC via the draft comment response form.
Response:	Thank you.
Segment:	2
Organization:	Midwest ISO, Inc.
Member:	Jason L Marshall
Comment:	We are abstaining because a number of our stakeholders have concerns regarding the definition of Protection System and inclusion of UVLS and UFLS in a standard dealing with maintenance of protection systems.
Response:	Thank you.
Segment:	5
Organization:	Pacific Gas and Electric Company
Member:	Richard J. Padilla
Comment:	We cast a negative ballot due to a negative vote on the standard and recommend that the VRFs and VSLs be

	addressed after the standard comments are resolved
Response:	Thank you.
Segment:	10
Organization:	Western Electricity Coordinating Council
Member:	Louise McCarren
Comment:	Do not agree with all of the requirements of the current proposed standard, so will not vote to approve associated VRFs and VSLs
Response:	Thank you.
Segment:	3
Organization:	Central Lincoln PUD
Member:	Steve Alexanderson
Comment:	Too early to approve the VRFs and VSLs since the requirements need to be fixed first.
Response:	Thank you.
Segment:	1
Organization:	American Electric Power
Member:	Paul B. Johnson
Comment:	AEP has comments regarding the current requirements and measures that need to be addressed, so comments on VSLs are irrelevant at this time.
Response:	Thank you.
Segment:	6
Organization:	AEP Marketing
Member:	Edward P. Cox
Comment:	AEP has comments regarding the current requirements and measures that need to be addressed.
Response:	Thank you.
Segment:	1

Organization:	BC Transmission Corporation
Member:	Gordon Rawlings
Comment:	Not prepared to vote affirmative until such time as BC Hydro can support Project 2007-17 PRC-005-2
Response:	Thank you.
Segment:	3
Organization:	City of Bartow, Florida
Member:	Matt Culverhouse
Comment:	The proposed draft opens the standard up to regulate DC circuit testing on distribution elements with no significant improvement to BES reliability.
Response:	This appears to be a comment on the technical content of the standard, not on the VRFs or VSLs.
Segment:	3
Organization:	Tri-State G & T Association Inc.
Member:	Janelle Marriott
Comment:	Clarification is needed to address the potentially onerous implementation, administration, audit of the proposed revisions.
Response:	Without details of your concern, the SDT is unable to respond.
Segment:	3
Organization:	Consolidated Edison Co. of New York
Member:	Peter T Yost
Comment:	There is not enough clarity on whether a Distribution Provider (DP) will be able to clearly identify which protection system components it does own and needs to maintain. Many DPs own and/or operate equipment identified in the existing or proposed definition. However, not all such equipment translates into a transmission Protection System. The definition needs clarification on when such equipment is a part of the transmission protection system. Also, the time provided for the first phase "at least six months" is too open ended and does not provide entities with a clear timeline. It is suggested that one year is appropriate for the first phase phasing out the second year in stages.
Response:	This appears to be a comment on the technical content of the standard, definition, and Implementation Plan,

	not on the VRFs or VSLs.
Segment:	2
Organization:	New York Independent System Operator
Member:	Gregory Campoli
Comment:	There is not enough clarity on whether a Distribution Provider (DP) will be able to clearly identify which protection system components it does own and needs to maintain. Many DPs own and/or operate equipment identified in the existing or proposed definition. However, not all such equipment translates into a transmission Protection System. The definition needs clarification on when such equipment is a part of the transmission protection system. Also, the time provided for the first phase "at least six months" is too open ended and does not provide entities with a clear timeline. It is suggested that one year is appropriate for the first phase phasing out the second year in stages. Regarding battery visuals, the suggestion for consideration is it should be changed from 3 months to 6 months. Electrolyte levels of today's lead-calcium batteries are relatively stable for a 6 month period compared to lead-antimony batteries used in the past. The Implementation plan is too short - In many instances it will be impossible to meet, especially if entities have to create, purchase and adopt new databases to track maintenance activities. Often new procedures will have to be written and additional resources justified and hired. It would be more acceptable if a staged approached was taken similar to the DME Standard. Accounting for every component of a protection system will be an enormous overhead and will take away resources from actually doing maintenance. Emphasis should be on systems and not individual components.The Standard does not provide a grace period if an entity is unable to meet the maintenance requirement for extenuating circumstances. For example if an entity has to divert maintenance resources to storm restoration following a major event, slack built into a maintenance program can be eaten up and put the maintenance over the prescribed period. Provision should be made for a mitigation plan to get back on track. We do not believe the reliability of the Bulk Electric System will be compromised if an entities' maintenance program slips by a few months due to extreme contingencies, especially if it is brought back on track within a short time frame.
Response:	These comments appear to be related to the technical content of the standard, definition, and Implementation Plan, not on the VRFs or VSLs.
Segment:	4, 5
Organization:	Florida Municipal Power Agency
Member:	Frank Gaffney, David Schumann

Comment:	FMPA recommends a negative vote on PRC-005-2, Project 2007-17, for three significant reasons 1. As written, it opens up the PRC-005 standard to Technical Feasibility Exceptions because some batteries are not able to accommodate all of the tests proscribed in the draft standard as explained by Steve Alexanderson in a prior e-mail to the ballot pool. The draft standard would cause NERC to regulate through the standards battery testing, DC circuit testing, etc. on distribution elements with no significant improvement to BES reliability, which is beyond the statutory scope of the standards 2. The standard unreasonably retains the "100% compliance" paradigm for thousands, if not millions of protection system components. Will the Standard Introduce Technical Feasibility Exceptions to PRC Standards? As described by Steve Alexanderson in a prior e-mail to the ballot pool, a large proportion of the batteries (as high as 50% as reported by some SMEs) are not able to accommodate all of the tests prescribed in the draft standard. Will this necessitate the introduction of TFEs into the process unnecessarily? The Standard Reaches Beyond the Statutory Scope of the Reliability Standards As written, the standard requires testing of batteries, DC control circuits, etc., of distribution level protection components associated with UFLS and UVLS. UFLS and UVLS are different than protection systems used to clear a fault from the BES. An uncleared fault on the BES can have an Adverse Reliability Impact and hence; the focus on making sure the fault is cleared is important and appropriate. However, a UFLs or UVLS event happens after the fault is cleared and is an inexact science of trying to automatically restore supply and demand balance (UFLS) or restore voltages (UVLS) to acceptable levels. If a few UFLS or UVLS relays fail to operate out of potentially thousands of relays with the same function, there is no significant impact to the function of UFLS or UVLS. Hence, there is no corresponding need to focus on every little aspect of the UFLS or UVLS systems. Therefore, the only component of UFLS or UVLS that ought to be focused on in the new PRF-005 standard is the UFLS or UVLS relay itself and not distribution class equipment such as batteries, DC control circuitry, etc., and these latter ought to be removed from the standard. In addition, most distribution circuit are radial without substation arrangements that would allow functional testing without putting customers out of service while the testing was underway, or at least without momentary outages while customers were switched from one circuit to another. Therefore, as written, we would be sacrificing customer service for a negligible impact on BES reliability. Perfection is Not A Realistic Goal The standard allows no mistakes. Even the famous six sigma quality management program allows for defects and failures (i.e., six sigma is six standard deviations, which means that statistically, there are events that fall outside of six standard deviations). PRC-005 has been drafted such that any failure is a violation, e.g., 1 day late on a single relay test of tens of thousands of relays is a violation. That is not in alignment with worldwide accepted quality management practices (and also makes audits very painful because statistical, random sampling should be the mode of audit, not 100% review as is currently being done in many instances). FMPA suggests

	considering statistically based performance metrics as opposed to an unrealistic performance target that does not allow for any failure ever. Due to the shear volume of relays, with 100% performance required, if the standards remain this way, PRC-005 will likely be in the top ten most violated standards for the forever. There is a fundamental flaw in thinking about reliability of the BES. We are really not trying to eliminate the risk of a widespread blackout, we are trying to reduce the risk of a widespread blackout. We plan and operate the system to single and credible double contingencies and to finite operating and planning reserves. To eliminate the risk, we would need to plan and operate to an infinite number of contingencies, and have an infinite reserve margin, which is infeasible. Therefore, by definition, there is a finite risk of a widespread blackout that we are trying to reduce, not eliminate, and, by definition, by planning and operating to single and credible double contingencies and finite operating and planning reserves, we are actually defining the level of risk from a statistical basis we are willing to take. With that in mind, it does not make sense to require 100% compliance to avoid a smaller risk (relays) when we are planning to a specified level of risk with more major risk factors (single and credible double contingencies and finite planning and operating reserves).
Response:	1. This comment appears to be related to the technical content of the Standard, not on the VRFs or VSLs. 2. The NERC criteria for VSLs do not currently permit them to allow some level of non-performance without being in violation. Much of this comment appears to be related to the technical content of the standard, not on the VRFs or VSLs.
Segment:	1
Organization:	Lake Worth Utilities
Member:	Walt Gill
Comment:	1. As written, is opens up the PRC-005 standard to Technical Feasibility Exceptions because some batteries are not able to accommodate all of the tests proscribed in the draft standard 2. The draft standard would cause NERC to regulate through the standards battery testing, DC circuit testing, etc. on distribution elements with no significant improvement to BES reliability, which is beyond the statutory scope of the standards 3. The standard unreasonably retains the "100% compliance" paradigm for thousands, if not millions of protection system components. Will the Standard Introduce Technical Feasibility Exceptions to PRC Standards? a large proportion of the batteries (as high as 50% as reported by some SMEs) are not able to accommodate all of the tests prescribed in the draft standard. Will this necessitate the introduction of TFEs into the process unnecessarily? The Standard Reaches Beyond the Statutory Scope of the Reliability

	Standards As written, the standard requires testing of batteries, DC control circuits, etc., of distribution level protection components associated with UFLS and UVLS. UFLS and UVLS are different than protection systems used to clear a fault from the BES. An uncleared fault on the BES can have an Adverse Reliability Impact and hence; the focus on making sure the fault is cleared is important and appropriate. However, a UFLs or UVLS event happens after the fault is cleared and is an inexact science of trying to automatically restore supply and demand balance (UFLS) or restore voltages (UVLS) to acceptable levels. If a few UFLS or UVLS relays fail to operate out of potentially thousands of relays with the same function, there is no significant impact to the function of UFLS or UVLS. Hence, there is no corresponding need to focus on every little aspect of the UFLS or UVLS systems. Therefore, the only component of UFLS or UVLS that ought to be focused on in the new PRF-005 standard is the UFLS or UVLS relay itself and not distribution class equipment such as batteries, DC control circuitry, etc., and these latter ought to be removed from the standard. In addition, most distribution circuit are radial without substation arrangements that would allow functional testing without putting customers out of service while the testing was underway, or at least without momentary outages while customers were switched from one circuit to another. Therefore, as written, we would be sacrificing customer service for a negligible impact on BES reliability. Perfection is Not A Realistic Goal The standard allows no mistakes. Even the famous six sigma quality management program allows for defects and failures (i.e., six sigma is six standard deviations, which means that statistically, there are events that fall outside of six standard deviations). PRC-005 has been drafted such that any failure is a violation, e.g., 1 day late on a single relay test of tens of thousands of relays is a violation. That is not in alignment with worldwide accepted quality management practices (and also makes audits very painful because statistical, random sampling should be the mode of audit, not 100% review as is currently being done in many instances). FMPA suggests considering statistically based performance metrics as opposed to an unrealistic performance target that does not allow for any failure ever. Due to the shear volume of relays, with 100% performance required, if the standards remain this way, PRC-005 will likely be in the top ten most violated standards for the forever. There is a fundamental flaw in thinking about reliability of the BES. We are really not trying to eliminate the risk of a widespread blackout, we are trying to reduce the risk of a widespread blackout. We plan and operate the system to single and credible double contingencies and to finite operating and planning reserves. To eliminate the risk, we would need to plan and operate to an infinite number of contingencies, and have an infinite reserve margin, which is infeasible. Therefore, by definition, there is a finite risk of a widespread blackout that we are trying to reduce, not eliminate, and, by definition, by planning and operating to single and credible double contingencies and finite operating and planning reserves, we are actually defining the level of risk from a statistical basis we are willing to take. With that in mind, it does not make sense to require 100%

	compliance to avoid a smaller risk (relays) when we are planning to a specified level of risk with more major risk factors (single and credible double contingencies and finite planning and operating reserves).
Response:	1. This comment appears to be related to the technical content of the standard, not on the VRFs or VSLs. 2. This comment appears to be related to the technical content of the standard, not on the VRFs or VSLs. 3. The NERC criteria for VSLs do not currently permit them to allow some level of non-performance without being in violation. Much of this comment appears to be related to the technical content of the Standard, not on the VRFs or VSLs.
Segment:	4
Organization:	Wisconsin Energy Corp.
Member:	Anthony Jankowski
Comment:	see comments on standard
Response:	Please refer to the SDT responses to your comments on the comment form.
Segment:	5
Organization:	Consumers Energy
Member:	James B Lewis
Comment:	1. If multiple redundant Protection System components, with associated parallel tripping paths, are provided, Table 1a, 1b, and 1c require that each parallel path be maintained, and that the maintenance be documented. Often, these multiple schemes are provided not to meet specific reliability-related requirements, but instead to provide operating flexibility. Testing these likely will require outages, and those outages may result in decreased reliability. Further, the documentation related to maintenance of all paths will be very cumbersome, and will lead to increased compliance exposure simply by its volume. This may perversely lead to entities NOT installing the redundant schemes, resulting in decreased reliability. 2. Many of the activities described in the Tables are not, by themselves, clear. The standard should include sufficient detail such that entities are clear as to what must be done for compliance, rather that relying on supplementary documents for this information. For example, it's not clear, in Table 1a (Station DC Supply), what is meant by, "Verify that the dc supply can perform as designed when the ac power from the grid is not present." Similarly, it isn't clear from the general description within the Tables that components possessing different monitoring attributes within a single scheme, may be distinguished such that differing relevant tables can be used for the separate components. 3. In Table 1a, Station DC Supply, one of two optional activities is to "Verify that the station battery can

	perform as designed by evaluating the measured cell/unit internal ohmic values to station battery baseline. Battery assemblies supplied by some manufacturers have the connections made internally, making this option unavailable. Experience with ASME standards show that NERC and SDT members may be jointly and separately liable for litigation by specifying methods that either prefer or prohibit use of certain technologies. 4. Two of the four Maintenance Activities that begin with "Perform a complete functional trip …" conclude with "… does not require actual tripping of circuit breakers or other interrupting devices. Do the other two such activities therefore require tripping of circuit breakers or other interrupting devices? 5. Performance of the minimum activities specified within Table 1a for legacy systems, particularly regarding control circuits, will require considerable disconnection and reconnection of portions of the circuits. Such activities will likely cause far more problems on restoration-to-service than they will locate and correct. We suggest that the SDT reconsider these activities with regard for this concern. 5. We do not agree that Footnotes within the Standard are an appropriate method of providing information that is important to the application of the Standard. Important information should be provided within the standard text. 6. As for the definition, it is unclear whether "voltage and current sensing inputs" include the instrument transformer itself, or does it pertain to only the circuitry and input to the protective relays. 7. As for the definition, it is not clear what is included in the component, "station dc supply" without referring to other documents (the posted Supplementary Reference and/or FAQ) for clarification. The definition should be sufficiently detailed to be clear. 8. If Protection Systems trip via AC methods, are those systems, and the associated control circuitry included in the definition and within the requirements of the Standard as expressed within the Tables?
Response:	These comments all appear to be related to the technical content of the Standard and to the definition, not to the VRFs or VSLs.
Segment:	1, 3, 5, 6
Organization:	Kansas City Power & Light Co.
Member:	Mike Gammon, Charles Locke, Scott Heidtbrink, Thomas Saitta
Comment:	The proposed changes in the Standard are far too prescriptive and do not take into account the multitude of manufacturers' equipment by establishing broad maintenance cycles and testing intervals.
Response:	This comment appears to be related to the technical content of the Standard, not to the VRFs or VSLs.
Segment:	5

Organization:	Salt River Project
Member:	Glen Reeves
Comment:	SRP believes the requirements of the Standard are confusing and may be problematic in determining compliance. We also believe the required functional testing of the breaker trip coil may potentially increase maintenance outages of circuit breakers. In most cases, circuit breaker maintenance outages can be coordinated such that Protection System maintenance and testing can be done simultaneously. However, in some cases this may not be possible. Outages of any BES facility whether planned or unplanned can impact system reliability. SRP suggests that trip coil monitoring devices be included as an acceptable means of ensuring the trip coil is functioning properly. This will help to avoid unnecessary outages.
Response:	This comment appears to be related to the technical content of the Standard, not to the VRFs or VSLs.
Segment:	6
Organization:	Seattle City Light
Member:	Dennis Sismaet
Comment:	Functional testing is impractical.
Response:	This comment appears to be related to the technical content of the Standard, not to the VRFs or VSLs.
Segment:	1
Organization:	Keys Energy Services
Member:	Stan T. Rzad
Comment:	1. As written, it opens up the PRC-005 standard to Technical Feasibility Exceptions because some batteries are not able to accommodate all of the tests proscribed in the draft standard. The draft standard would cause NERC to regulate through the standards battery testing, DC circuit testing, etc. on distribution elements with no significant improvement to BES reliability, which is beyond the statutory scope of the standards 2. The standard unreasonably retains the "100% compliance" paradigm for thousands, if not millions of protection system components.
Response:	1. This comment appears to be related to the technical content of the Standard, not to the VRFs or VSLs. 2. The NERC criteria for VSLs do not currently permit them to allow some level of non-performance without being in violation. Much of this comment appears to be related to the technical content of the Standard, not on the VRFs or VSLs.

Segment:	1
Organization:	PPL Electric Utilities Corp.
Member:	Brenda L Truhe
Comment:	PPL EU is voting negative because Requirement 1.1 "Identify all Protection System components" is too broad and must be clarified and the definition of Protective Relays is not limited to only those devices that use electrical quantities as inputs (exclude pressure, temperature, gas, etc).
Response:	This comment appears to be related to the technical content of the Standard, not to the VRFs or VSLs.
Segment:	3
Organization:	Springfield Utility Board
Member:	Jeff Nelson
Comment:	Please refer to SUB's comments on VRFs and VFLs in the Comment Form
Response:	Please refer to the SDT responses to your comments on the comment form.
Segment:	3
Organization:	Louisville Gas and Electric Co.
Member:	Charles A. Freibert
Comment:	Comments will be submitted under a comment form
Response:	Please refer to the SDT responses to your comments on the comment form.

NERC
NORTH AMERICAN ELECTRIC
RELIABILITY CORPORATION

Consideration of Comments on Initial Ballot of "Protection System" Definition

The PRC-005 Standard Drafting Team thanks all those who participated in the initial ballot for the proposed revision to the definition of the term, "Protection System."

All balloters are advised to review the comments and responses in this report as an aid in determining how to participate in the recirculation ballot.

Based on stakeholder comments, the drafting team refined its proposed definition of Protection System as shown below:

> Protective relays which respond to electrical quantities, communication systems necessary for correct operation of protective functions, voltage and current sensing devices providing inputs to protective relays, station dc supply, and control circuitry associated with protective functions through the trip coil(s) of the circuit breakers or other interrupting devices.

Several comments questioned the reason for implementing the definition of Protection System in advance of implementing the proposed modifications to PRC-005-1. When the Board of Trustees was asked to approve an interpretation of PRC-005-1 that was written by the PSMT SDT, the board acknowledged the reliability gap identified by the drafting team caused by the definition of "protection system" and directed that work to close this reliability gap should be given "priority." To close this reliability gap the BOT has directed that revised definition be applied to PRC-005-1 as soon as practical - not years from now.

Stakeholder comments indicated that applying the expanded scope of the definition of Protection System would to PRC-005-1 would require more than six months and suggested expanding this to 12 months, and the drafting team made this change to the implementation plan. The team adjusted the implementation plan so that entities will have at least twelve months, rather than the six months originally proposed, to apply the new definition of Protection System to PRC-005-1 – Protection System Maintenance and Testing to Requirement R1 of PRC-005-1. The other parts of the implementation plan remain unchanged.

Both clean and redline versions of the definition and the implementation that show the conforming revisions are posted at the following site:

http://www.nerc.com/filez/standards/Protection_System_Maintenance_Project_2007-17.html

If you feel that your comment has been overlooked, please let us know immediately. Our goal is to give every comment serious consideration in this process! If you feel there has been an error or omission, you can contact the Vice President and Director of Standards, Herbert Schrayshuen, at 609-452-8060 or at herb.schrayshuen@nerc.net. In addition, there is a NERC Reliability Standards Appeals Process.[1]

[1] The appeals process is in the Reliability Standards Development Procedures: http://www.nerc.com/standards/newstandardsprocess.html.

Segment:	1
Organization:	International Transmission Company Holdings Corp
Member:	Michael Moltane
Comment:	It should clearly state in the definition or elsewhere in the standard that automatic ground switches intended to protect the BES are to be considered interrupting devices. This is stated in the Supplemental Reference but the Supplemental Reference is not part of the standard.
Response:	The definition does not identify individual types of interrupting devices. It is left to Regional BES definitions to determine if these devices, the system components "protected" by these devices, and their initiating Protection Systems are BES elements.
Segment:	1, 6
Organization:	Cleco Power LLC
Member:	Danny McDaniel, Matthew D Cripps
Comment:	The revised definition to Protection System should include the following exception. "Devices that sense non electrical conditions, such as thermal or transformer sudden pressure relays are not included." For consistence across the standards, see PRC-004, which references System Protection, the same definition should be used.
Response:	The definition has been modified to specify, "Protective relays which respond to electrical quantities".
Segment:	1, 5, 6
Organization:	American Electric Power, AEP Service Corp., AEP Marketing
Member:	Paul B. Johnson, Brock Ondayko, Edward P. Cox
Comment:	1. The term "station" should either be defined or removed from the definition, as it implies transmission and distribution assets while the term "plant" is used to define generation assets. It would suffice to simply refer to the "DC Supply". 2. As written, the implementation plan only specifies a time frame for entities to update their documentation for PRC-005-1 and PRC-005-2 compliance. The implementation plan also needs to give entities a time frame to address any required changes to their documentation for other standards that use the term "Protection System", including but not limited to NUC-001-2, PER-005-1, PRC-001-1, etc.
Response:	1. The term "station" is used in a generic sense to apply to either "substation" or "generation station"

	facilities. 2. An assessment of the changes to the definition (posted with the first comment period), relative to the entire body of other NERC Standards using this defined term, determined that the changes are consistent with the other existing uses of the definition, and that no other implementation plan considerations were necessary. No comments were received relative to this assessment.
Segment:	1
Organization:	Avista Corp.
Member:	Scott Kinney
Comment:	The modified definition of Protection System now refers to "functions" rather than "devices." What are the "functions?" This new term adds confusion without being defined in the standard.
Response:	The "functions" are the accumulated performance of the various portions of the Protection System. This term is used to distinguish "protective functions" from annunciation, signaling, or information.
Segment:	1, 3
Organization:	MidAmerican Energy Co.
Member:	Terry Harbour, Thomas C. Mielnik
Comment:	The following changes should be incorporated in the definition to insure it is used consistently in PRC-005 and any other standards where it appears. The following is a suggested revised definition: "Protection System" is defined as: A system that uses measurements of voltage, current, frequency and/or phase angle to determine anomalies and to trip a portion of the BES to provide protection for the BES and consists of 1) Protective relays for BES elements and, 2) Communications systems necessary for correct BES protection system operations and, 3) Current and voltage sensing devices supplying BES protective relay input and, 4) Station DC supply to BES protection systems excluding battery chargers, and 5) DC control trip paths to the trip coil(s) of the circuit breakers or other interrupting devices for BES

	elements.
Response:	The definition of Protection System establishes "what a Protective System is", not "what it does". The application-related suggestions in the comment are best left to individual standards. The SDT, however, did modify the "protective relays" to include only those that respond to electrical quantities. Additionally, constraining relays to "on BES elements" would necessarily exclude UFLS relays, and "trip a portion of the BES" would exclude SPS and UVLS which are on the BES, but which trip non-BES elements. The SDT also disagrees with excluding battery chargers.
Segment:	3, 5, 6
Organization:	Lincoln Electric System
Member:	Bruce Merrill, Dennis Florom, Eric Ruskamp
Comment:	LES believes the proposed definition of Protection System as written remains open to interpretation. LES offers the following Protection System definition for the SDT's consideration: "Protection System" is defined as: A system that uses measurements of voltage, current, frequency and/or phase angle to determine anomalies and trips a portion of the BES and consists of 1) Protective relays, and associated auxiliary relays, that initiate trip signals to trip coils, 2) associated communications channels, 3) current and voltage transformers supplying protective relay inputs, 4) dc station supply, excluding battery chargers, and 5) dc control trip path circuitry to the trip coils of BES connected breakers, or equivalent interrupting device, and lockout relays.
Response:	The definition of Protection System establishes "what a Protective System is", not "what it does". The application-related suggestions in the comment are best left to individual standards. The SDT, however, did modify the "protective relays" to include only those that respond to electrical quantities. Additionally, constraining relays to "on BES elements" would necessarily exclude UFLS relays, and "trip a portion of the BES" would exclude SPS and UVLS which are on the BES, but which trip non-BES elements. The SDT also

	disagrees with excluding battery chargers.
Segment:	4
Organization:	Madison Gas and Electric Co.
Member:	Joseph G. DePoorter
Comment:	Recommend the following definition "Protection System" is defined as: A system that uses measurements of voltage, current, frequency and/or phase angle to determine anomalies and trips a portion of the BES and consists of 1) Protective relays, and associated auxiliary relays, that initiate trip signals to trip coils, 2) associated communications channels, 3) current and voltage transformers supplying protective relay inputs, 4) dc station supply, excluding battery chargers, and 5) dc control trip path circuitry to the trip coils of BES connected breakers, or equivalent interrupting device, and lockout relays.
Response:	The definition of Protection System establishes "what a Protective System is", not "what it does". The application-related suggestions in the comment are best left to individual standards. The SDT, however, did modify the "protective relays" to include only those that respond to electrical quantities. Additionally, constraining relays to "on BES elements" would necessarily exclude UFLS relays, and "trip a portion of the BES" would exclude SPS and UVLS which are on the BES, but which trip non-BES elements. The SDT also disagrees with excluding battery chargers.
Segment:	1
Organization:	National Grid
Member:	Saurabh Saksena
Comment:	1. National Grid suggests adding "Protection System Components including" in the beginning. This is because the word "components" has been used extensively throughout the standard and there is no mention of what constitutes a protection system component in the standard. The word "component" does find mention in FAQs, however, it is recommended to mention it in the main standard.

	2. Also, National Grid proposes a change in the proposed definition (changing "voltage and current sensing inputs" to "voltage and current sensing devices providing inputs"). The revised definition should read as follows: Protective System Components including Protective relays, communication systems necessary for correct operation of protective functions, voltage and current sensing devices providing inputs to protective relays and associated circuitry from the voltage and current sensing devices, station dc supply, and control circuitry associated with protective functions from the station dc supply through the trip coil(s) of the circuit breakers or other interrupting devices. 3. The time provided for the first phase "at least six months" is too open ended and does not give entities a clear timeline. National Grid suggests 1 year for the first phase. 4. As a result, National Grid suggests phasing out the second phase in stages.
Response:	1. The SDT believes that the suggested text does not add to the definition, and may actually lead to additional problems, such as an implication that the list within the definition is incomplete. 2. The definition has been modified to reflect the proposed change and the "associated circuitry …" has been removed. 3. The implementation plan has been modified to replace "six months" with "twelve months". 4. The SDT does not understand this comment.
Segment:	10
Organization:	Midwest Reliability Organization
Member:	Dan R. Schoenecker
Comment:	1. The MRO's NERC Standards Review Subcommittee believes the proposed protection system definition is unclear specifically as it relates to dc station supply. We would like more clarity as to what is included in the dc station supply. 2. We believe battery chargers should not be included in the definition; if the Standard Drafting Team revises the definition we would ask that Table 1 be adjusted, accordingly
Response:	1. The definition addressing "dc supply" was modified. 2. The SDT believes that battery chargers should be included in the definition. Without proper functioning of battery chargers, the battery will be discharged by normal station dc load, and will be unable to perform its function; also, there are some entities which use a charger to provide the dc supply without use of a battery.
Segment:	4

Organization:	Old Dominion Electric Coop.
Member:	Mark Ringhausen
Comment:	I am voting Yes on the ballot, but I do have a small issue with the wording of 'station DC supply'. In some of our UFLS locations, we are not in a substation, but out on the feeder circuit and utilizing the DC supply on the feeder recloser. I think my reading of this definition would apply to this recloser DC supply as well as the Station DC Supply.
Response:	To the extent that UFLS is implemented within distribution system devices not within substations, the activities and intervals established within the standard would apply.
Segment:	6
Organization:	Northern Indiana Public Service Co.
Member:	Joseph O'Brien
Comment:	It is still not clear whether battery chargers fall under this definition.
Response:	The change to “station dc supply” is intended to expand the definition to include all essential elements including battery chargers.
Segment:	8
Organization:	SPS Consulting Group Inc.
Member:	Jim R Stanton
Comment:	The words in the definition, “...includes one or more of the following activities” are ambiguous and subject to inconsistent interpretation by auditors. Suggest changing the language to, "...at least one of the following activities."
Response:	This comment does not appear to apply to the “Protection System” definition.
Segment:	4
Organization:	Detroit Edison Company
Member:	Daniel Herring
Comment:	1. The definition should clarify whether current and voltage transformers themselves are included. 2. This implementation plan and the one for PRC-005-2 should be consistent.
Response:	1. This portion of the definition has been modified for clarity.

	2. The Implementation Plan for the definition has been modified. The Implementation Plan for the Standard is a separate issue.
Segment:	1
Organization:	BC Transmission Corporation
Member:	Gordon Rawlings
Comment:	The definition excludes mechanical relays (Gas Relays) which may affect the BES
Response:	The definition has been modified to specify, "Protective relays which respond to electrical quantities".
Segment:	1, 3, 4, 5, 6
Organization:	Empire District Electric Co., Cowlitz County PUD, Cowlitz County PUD, Cowlitz County PUD, Florida Municipal Power Pool
Member:	Ralph Frederick Meyer, Russell A Noble, Rick Syring, Bob Essex, Thomas E Washburn
Comment:	1. It is still unclear whether relays that respond to mechanical inputs, such as sudden pressure relays, are included in the proposed definition as protective relays. While PRC-005-2 R1 limits the scope of that particular standard to protection systems that sense electrical quantities, it is remains unclear in other standards that use the defined term whether mechanical input protections are included. 2. We suggest that "Protective Relay" also be defined, and that the definition clearly exclude devices that respond to mechanical inputs in line with the NERC interpretation of PRC-005-1 in response to the CMPWG request.
Response:	1. The definition has been modified to specify, "Protective relays which respond to electrical quantities". 2. "Protective relay" is defined by IEEE and does not have a unique meaning when used in a NERC standard, thus the SDT sees no need to either modify or duplicate that definition.
Segment:	3
Organization:	Central Lincoln PUD
Member:	Steve Alexanderson
Comment:	1. Do you believe the proposed definition of Protection System is ready for ballot? If not, please explain why.

	0 Yes X No Comments: It is still unclear whether relays that respond to mechanical inputs, such as sudden pressure relays, are included in the proposed definition as protective relays. While PRC-005-2 R1 limits the scope of that particular standard to protection systems that sense electrical quantities, it is remains unclear in other standards that use the defined term whether mechanical input protections are included. We suggest that "Protective Relay" also be defined, and that the definition clearly exclude devices that respond to mechanical inputs in line with the NERC interpretation of PRC-005-1 in response to the CMPWG request. 2. Do you agree with the implementation plan for the revised definition of Protection System? The implementation plan has two phases – the first phase gives entities at least six months to update their protection system maintenance and testing program; the second phase starts when the protection system maintenance and testing program has been updated and requires implementation of any additional maintenance and testing associated with the program changes by the end of the first complete maintenance and testing cycle described in the entity's revised program. If you disagree with this implementation plan, please explain why. X Yes 0 No Comments:
Response:	1. The definition has been modified to specify, "Protective relays which respond to electrical quantities". 2. Thank you.
Segment:	3
Organization:	Consumers Energy
Member:	David A. Lapinski
Comment:	1. It is unclear whether "voltage and current sensing inputs" include the instrument transformer itself, or does it pertain to only the circuitry and input to the protective relays. 2. It is not clear what is included in the component, "station dc supply" without referring to other documents (the posted Supplementary Reference and/or FAQ) for clarification. The definition should be sufficiently detailed to be clear. 3. If Protection Systems trip via AC methods, are those systems, and the associated control circuitry included in the definition and within the requirements of the Standard as expressed within the Tables?
Response:	1. The definition has been changed for clarity; the SDT intends that the output of these devices, measured at the relay should properly represent the primary quantities.

	2. There are many possible variations to “station dc supply”. The definition must be sufficiently general such that variations can be included. 3. The definition has been generalized such that ac tripping is included.
Segment:	1, 3, 5
Organization:	Arizona Public Service Co., APS
Member:	Robert D Smith, Thomas R. Glock, Mel Jensen
Comment:	The change to the definition relative to the voltage and current sensing devices is too prescriptive. Methods of determining the integrity of the voltage and current inputs into the relays to ensure reliability of the devices should be up to the discretion of the utility.
Response:	The definition has been changed for clarity; the SDT intends that the output of these devices, measured at the relay should properly represent the primary quantities.
Segment:	4
Organization:	Consumers Energy
Member:	David Frank Ronk
Comment:	1. It is unclear whether “voltage and current sensing inputs” include the instrument transformer itself, or does it pertain to only the circuitry and input to the protective relays? 2. It is not clear what is included in the component, “station dc supply” without referring to other documents (the posted Supplementary Reference and/or FAQ) for clarification. The definition should be sufficiently detailed to be clear. 3. If Protection Systems trip via AC methods, are those systems, and the associated control circuitry included? 4. For entities that may not have included all elements reflected in the modified definition within their PRC-005-1 program, 6-months following regulatory approvals may not be sufficient to identify all relevant additional components, develop maintenance procedures, develop maintenance and testing intervals, develop a defendable technical basis for both the procedures and intervals, and train personnel on the newly implemented items. We propose that a 12-month schedule following regulatory approvals may be more practical.
Response:	1. The SDT made several changes to the definition to improve clarity. The SDT intends that the output of

	these devices, measured at the relay should properly represent the primary quantities. 2. There are many possible variations to “station dc supply”. The definition must be sufficiently general such that variations can be included. 3. The definition has been generalized such that ac tripping is included. 4. The Implementation Plan has been modified to allow a 12-month schedule as suggested. However, to agree with the SDT Guidelines established by NERC, “end of the first calendar quarter” was modified to “first day of the first calendar quarter”.
Segment:	1, 3, 6
Organization:	Consolidated Edison Co. of New York
Member:	Christopher L de Graffenried, Peter T Yost, Nickesha P Carrol
Comment:	1. There is not enough clarity on whether a Distribution Provider (DP) will be able to clearly identify which protection system components it does own and needs to maintain. Many DPs own and/or operate equipment identified in the existing or proposed definition. However, not all such equipment translates into a transmission Protection System. 2. The definition needs clarification on when such equipment is a part of the transmission protection system. 3. Also, the time provided for the first phase "at least six months" is too open ended and does not provide entities with a clear timeline. It is suggested that one year is appropriate for the first phase phasing out the second year in stages.
Response:	1. This issue is properly addressed within the Standard, not within the definition. 2. This issue is properly addressed within the Standard, not within the definition. 3. The Implementation Plan has been modified to allow a 12-month schedule as suggested. However, to agree with the SDT Guidelines established by NERC, “end of the first calendar quarter” was modified to “first day of the first calendar quarter”.
Segment:	1, 3
Organization:	Hydro One Networks, Inc.
Member:	Ajay Garg, Michael D. Penstone
Comment:	The proposed definition of Protection System needs clarification on when such equipment is a part of the

	transmission protection system. Emphasis should be on systems and not individual components.
Response:	This issue is properly addressed within the Standard, not within the definition.
Segment:	4
Organization:	Y-W Electric Association, Inc.
Member:	James A Ziebarth
Comment:	From Question 1 on the comment form: The application of this definition to Reliability Standards NUC-001-2, PER-005-1, PRC-001-1, and PRC-004-1 results in confusion as to whether relays with mechanical inputs are included or excluded from this definition. PRC-005-2_R1 contains language limiting its applicability to relays operating on electrical inputs only, but the remaining standards that rely on this definition are not so specific. This being the case, it would make much more sense to clearly define what devices are actually meant in the glossary definition rather than leaving it up to each individual standard to do so.
Response:	The definition has been modified to specify, “Protective relays which respond to electrical quantities”.
Segment:	1, 3
Organization:	Platte River Power Authority
Member:	John C. Collins, Terry L Baker
Comment:	1. Although the applicable relays to which protective relays are outlined in the NERC PRC-005-2 Protection system Maintenance Draft Supplementary Reference dated May 27, 2010, they are not defined in the NERC Glossary of terms. Until it is clearly defined which relays are included inconsistencies will exists from region to region in their audit approaches and which relays they will be looking at. 2. Also, there is still debate why the protective relays would extend to mechanical devices such as the lock-out relay and tripping for trip-free relays. In our system configuration we risk reliability to customer load by testing the lock-out relays which we feel out weights the benefit of testing devices that we see little to no evidence of failure in.
Response:	1. This is properly an issue for the various Regional BES definitions. 2. The definition does not explicitly include these devices, although they are implicitly part of “control circuitry”.
Segment:	3
Organization:	Public Utility District No. 2 of Grant County

Member:	Greg Lange
Comment:	These systems are not always maintained at the component level, i.e. meggering from the relay input test switch through the cable and the CT. This has not closed all the issues around professional judgment (interpretations) that make us nervous when faced with the human element of an audit. We need more specificity to close that gap.
Response:	This issue is properly addressed within the Standard, not within the definition.
Segment:	1, 3, 5, 6
Organization:	Dominion Virginia Power, Dominion Resources Services, Dominion Resources, Inc., Dominion Resources, Inc.
Member:	John K Loftis, Michael F Gildea, Mike Garton, Louis S Slade
Comment:	The proposed definition introduces ambiguity and we suggest retaining the current definition.
Response:	The existing definition presents ambiguities and gaps which must be addressed in accordance with directives from the NERC BOT. Additionally, the draft definition constrains certain components to remove ambiguities.
Segment:	5
Organization:	Southern Company Generation
Member:	William D Shultz
Comment:	We agree that the definition provides clarity and will enhance the reliability of the Protection Systems to which it is applicable. The negative vote is a result of a belief that the definition's effective date must be coincident with the approval and implementation schedule of PRC-005-2. Since this new definition is directly linked to the proposed revised standard, it would be premature to make this definition effective prior to the effective date of the new standard. If balloted and approved, there is no obligation to or guarantee of any additional maintenance to be performed. PRC-005-2 includes this definition, the maintenance activities, and the intervals that will ensure execution of the maintenance and testing.
Response:	Thank you. When the Board of Trustees was asked to approve an interpretation of PRC-005-1 that was written by the PSMT SDT, the board acknowledged the reliability gap identified by the drafting team caused by the definition of "protection system" and directed that work to close this reliability gap should be given "priority." To close this reliability gap the BOT has directed that revised definition be applied to PRC-005-1 as soon as practical - not years from now. The implementation plan now proposes at least 12 months for entities to apply the new definition to PRC-005-1, and that should give entities time to apply the new

	definition to PRC-005-1.
Segment:	1, 3, 6
Organization:	Great River Energy
Member:	Gordon Pietsch, Sam Kokkinen, Donna Stephenson
Comment:	We agree with the revised Protection System definition. The revised definition should only be applied to PRC-005-2. The revised definition should not be applied to PRC-005-1.
Response:	Thank you. When the Board of Trustees was asked to approve an interpretation of PRC-005-1 that was written by the PSMT SDT, the board acknowledged the reliability gap identified by the drafting team caused by the definition of "protection system" and directed that work to close this reliability gap should be given "priority." To close this reliability gap the BOT has directed that revised definition be applied to PRC-005-1 as soon as practical - not years from now. The implementation plan now proposes at least 12 months for entities to apply the new definition to PRC-005-1, and that should give entities time to apply the new definition to PRC-005-1.
Segment:	5
Organization:	Progress Energy Carolinas
Member:	Wayne Lewis
Comment:	Progress Energy does not believe that the definition should be implemented separately from and prior to the implementation of PRC-005-2. We believe there should be a direct linkage between the definition's effective date to the approval and implementation schedule of PRC-005-2. Since this new definition should be directly linked to the proposed revised standard, it would be premature to make this new definition effective prior to the effective date of the new standard. We believe that changes to the maintenance program should be driven by the revision of the PRC standard, not by the revision of a definition.
Response:	Thank you. When the Board of Trustees was asked to approve an interpretation of PRC-005-1 that was written by the PSMT SDT, the board acknowledged the reliability gap identified by the drafting team caused by the definition of "protection system" and directed that work to close this reliability gap should be given "priority." To close this reliability gap the BOT has directed that revised definition be applied to PRC-005-1 as soon as practical - not years from now. The implementation plan now proposes at least 12 months for entities to apply the new definition to PRC-005-1, and that should give entities time to apply the new definition to PRC-005-1.

Segment:	1
Organization:	Ameren Services
Member:	Kirit S. Shah
Comment:	The implementation of the revised definition and PRC-005-2 PSMP must align on the same date.
Response:	Thank you. When the Board of Trustees was asked to approve an interpretation of PRC-005-1 that was written by the PSMT SDT, the board acknowledged the reliability gap identified by the drafting team caused by the definition of "protection system" and directed that work to close this reliability gap should be given "priority." To close this reliability gap the BOT has directed that revised definition be applied to PRC-005-1 as soon as practical - not years from now. The implementation plan now proposes at least 12 months for entities to apply the new definition to PRC-005-1, and that should give entities time to apply the new definition to PRC-005-1.
Segment:	3
Organization:	Niagara Mohawk (National Grid Company)
Member:	Michael Schiavone
Comment:	1. National Grid does not agree with the proposed implementation plan. The time provided for the first phase "at least six months" is too open ended and does not give entities a clear timeline. National Grid suggests 1 year for the first phase. 2. National Grid also suggests phasing out the second phase in stages.
Response:	1. The Implementation Plan has been modified to replace "six months" with "twelve months". 2. We do not understand your comment.
Segment:	1, 3, 3, 3, 3
Organization:	Southern Company Services, Inc., Alabama Power Company, Georgia Power Company, Gulf Power Company, Mississippi Power
Member:	Horace Stephen Williamson, Richard J. Mandes, Anthony L Wilson, Gwen S Frazier, Don Horsley
Comment:	We agree that the definition provides clarity and will enhance the reliability of the Protection Systems to which it is applicable. However, we feel that there needs to be a direct linkage of the definition's effective date to the approval and implementation schedule of PRC-005-2. Since this new definition is directly linked to the proposed revised standard, it would be premature to make this definition effective prior to the effective date of the new standard.

Response:	Thank you. When the Board of Trustees was asked to approve an interpretation of PRC-005-1 that was written by the PSMT SDT, the board acknowledged the reliability gap identified by the drafting team caused by the definition of "protection system" and directed that work to close this reliability gap should be given "priority." To close this reliability gap the BOT has directed that revised definition be applied to PRC-005-1 as soon as practical - not years from now. The implementation plan now proposes at least 12 months for entities to apply the new definition to PRC-005-1, and that should give entities time to apply the new definition to PRC-005-1.
Segment:	1, 5
Organization:	Entergy Corporation
Member:	George R. Bartlett, Stanley M Jaskot
Comment:	The following are the reasons associated with our Negative Ballot. 1. We agree with the definition, however we do not agree with the implementation plan. We believe implementation of the definition needs to coincide with the implementation of Standard PRC-005-2. To do otherwise, will cause entities to address equipment, documentation, work management process, and employee training changes needed for compliance twice within an unreasonably short timeframe. 2. A 12 month minimum timeframe is need to implement this definition 3. We also reserve the right to include selected reasons submitted by other Negative balloters for their Negative Ballot.
Response:	1. Thank you. 2. The Implementation Plan has been modified to allow a 12-month schedule as suggested. However, to agree with the SDT Guidelines established by NERC, "end of the first calendar quarter" was modified to "first day of the first calendar quarter". When the Board of Trustees was asked to approve an interpretation of PRC-005-1 that was written by the PSMT SDT, the board acknowledged the reliability gap identified by the drafting team caused by the definition of "protection system" and directed that work to close this reliability gap should be given "priority." To close this reliability gap the BOT has directed that revised definition be applied to PRC-005-1 as soon as practical - not years from now. The implementation plan now proposes at least 12 months for entities to apply the new definition to PRC-005-1, and that should give entities time to apply the new definition to PRC-005-1. 3. Thank you.
Segment:	3, 6

Organization:	Entergy
Member:	Joel T Plessinger, Terri F Benoit
Comment:	1. We agree with the definition, however we do not agree with the implementation plan. We believe implementation of the definition needs to coincide with the implementation of Standard PRC-005-2. To do otherwise, will cause entities to address equipment, documentation, work management process, and employee training changes needed for compliance twice within an unreasonably short timeframe. 2. A 12 month minimum timeframe is need to implement this definition
Response:	1. Thank you. 2. The Implementation Plan has been modified to allow a 12-month schedule as suggested. However, to agree with the SDT Guidelines established by NERC, "end of the first calendar quarter" was modified to "first day of the first calendar quarter". When the Board of Trustees was asked to approve an interpretation of PRC-005-1 that was written by the PSMT SDT, the board acknowledged the reliability gap identified by the drafting team caused by the definition of "protection system" and directed that work to close this reliability gap should be given "priority." To close this reliability gap the BOT has directed that revised definition be applied to PRC-005-1 as soon as practical - not years from now. The implementation plan now proposes at least 12 months for entities to apply the new definition to PRC-005-1, and that should give entities time to apply the new definition to PRC-005-1.
Segment:	5
Organization:	U.S. Bureau of Reclamation
Member:	Martin Bauer
Comment:	1. It is unfortunate that the definition did not retain consistency in the terms. As an example, the definition indicates it includes protective relays and communication systems for the correct operation of protective functions. It would have been better to use the term relays instead of the term functions. Now it is unclear what the communication systems are for. 2. The Time Horizons are too narrow for the implementation of the standard as written. The SDT appears to have not accounted for the data analysis associated with performance based systems. The data collection, analysis, and subsequent decisions associated development of a maintenance program and its justification do not occur overnight especially with larger utilities. In addition, this new standard will require complete rewrite of an entities internal maintenance programs. The internal processes associated with these vary based on the

	size of the entity and its organizational structure. Since this standard is so invasive into the internal decisions concerning maintenance, the standard should allow at least 18 months for entities to rewrite their internal maintenance programs to meet the program development requirements and 18 months to train the staff in the new program, incorporate the program into the entities compliance processes, and to implement the new program.
Response:	1. "Functions" was used, as some applications (SPS, for example) may have communications systems that operate other than via protective relays. 2. This comment appears to be focused on the revised Standard, not on the definition.
Segment:	2
Organization:	Midwest ISO, Inc.
Member:	Jason L Marshall
Comment:	We are abstaining because a number of our stakeholders have concerns regarding the definition of Protection System and the inclusion of UVLS and UFLS in a standard dealing with maintenance of protection systems.
Response:	The inclusion of UVLS/UFLS is related to a directive from FERC in Order 693, and to the SAR for this project.
Segment:	1
Organization:	Lakeland Electric
Member:	Larry E Watt
Comment:	An implementation plan should be associated with this definition change.
Response:	An Implementation Plan specifically for the definition is posted.
Segment:	1
Organization:	Clark Public Utilities
Member:	Jack Stamper
Comment:	The proposed definition does not provide the level of clarity that is needed.
Response:	The SDT made several changes to the definition to improve clarity.
Segment:	1
Organization:	Beaches Energy Services

Member:	Joseph S. Stonecipher
Comment:	While better than the last draft, too many problems still exist.
The following series of comments all indicate that the entity has submitted comments via the official comment form.	
Segment:	1, 5, 6
Organization:	Public Service Electric and Gas Co., PSEG Energy Resources & Trade LLC
Member:	Kenneth D. Brown, David Murray, James D. Hebson
Comment:	Please reference comments submitted by the PSEG companies on the official comment form for this standard.
Segment:	1
Organization:	Potomac Electric Power Co.
Member:	Richard J. Kafka
Comment:	PHI submitted comments
Segment:	3
Organization:	Louisville Gas and Electric Co.
Member:	Charles A. Freibert
Comment:	Comments will be submitte4d under the comment form
Segment:	3
Organization:	Bonneville Power Administration
Member:	Rebecca Berdahl
Comment:	Please see BPA's comments submitted during the concurrent formal comment period ending July 16, 2010.
Segment:	1
Organization:	GDS Associates, Inc.
Member:	Claudiu Cadar
Comment:	All comments included in the NERC comment form
Segment:	1, 3, 4, 5, 6
Organization:	FirstEnergy Energy Delivery, FirstEnergy Solutions, FirstEnergy Solutions, Ohio Edison Company,

	FirstEnergy Solutions
Member:	Robert Martinko, Kevin Querry, Kenneth Dresner, Douglas Hohlbaugh, Mark S Travaglianti
Comment:	Please see FE comments for suggested enhancements submitted via the parallel comment period for this definition.
Segment:	1
Organization:	Duke Energy Carolina
Member:	Douglas E. Hils
Comment:	Please see our responses in the comment form - thank you.
Segment:	8
Organization:	Utility Services LLC
Member:	Brian Evans-Mongeon
Comment:	see filed comments
Segment:	5
Organization:	PPL Generation LLC
Member:	Mark A. Heimbach
Comment:	Please see comments submitted by "PPL Supply" on 7/16/10.
From this point on, all comments provided relate to the proposed standard, not to the proposed definition and its implementation plan. Responses to comments submitted with ballots for the standard are included in the comment report for the standard – they are not duplicated here.	
Segment:	1
Organization:	Lake Worth Utilities
Member:	Walt Gill
Comment:	1. As written, is opens up the PRC-005 standard to Technical Feasibility Exceptions because some batteries are not able to accommodate all of the tests proscribed in the draft standard 2. The draft standard would cause NERC to regulate through the standards battery testing, DC circuit testing, etc. on distribution elements with no significant improvement to BES reliability, which is beyond the statutory scope of the standards 3. The standard unreasonably retains the "100% compliance" paradigm for thousands, if not millions of protection

	system components. Will the Standard Introduce Technical Feasibility Exceptions to PRC Standards? a large proportion of the batteries (as high as 50% as reported by some SMEs) are not able to accommodate all of the tests prescribed in the draft standard. Will this necessitate the introduction of TFEs into the process unnecessarily? The Standard Reaches Beyond the Statutory Scope of the Reliability Standards As written, the standard requires testing of batteries, DC control circuits, etc., of distribution level protection components associated with UFLS and UVLS. UFLS and UVLS are different than protection systems used to clear a fault from the BES. An uncleared fault on the BES can have an Adverse Reliability Impact and hence; the focus on making sure the fault is cleared is important and appropriate. However, a UFLs or UVLS event happens after the fault is cleared and is an inexact science of trying to automatically restore supply and demand balance (UFLS) or restore voltages (UVLS) to acceptable levels. If a few UFLS or UVLS relays fail to operate out of potentially thousands of relays with the same function, there is no significant impact to the function of UFLS or UVLS. Hence, there is no corresponding need to focus on every little aspect of the UFLS or UVLS systems. Therefore, the only component of UFLS or UVLS that ought to be focused on in the new PRF-005 standard is the UFLS or UVLS relay itself and not distribution class equipment such as batteries, DC control circuitry, etc., and these latter ought to be removed from the standard. In addition, most distribution circuit are radial without substation arrangements that would allow functional testing without putting customers out of service while the testing was underway, or at least without momentary outages while customers were switched from one circuit to another. Therefore, as written, we would be sacrificing customer service for a negligible impact on BES reliability. Perfection is Not A Realistic Goal The standard allows no mistakes. Even the famous six sigma quality management program allows for defects and failures (i.e., six sigma is six standard deviations, which means that statistically, there are events that fall outside of six standard deviations). PRC-005 has been drafted such that any failure is a violation, e.g., 1 day late on a single relay test of tens of thousands of relays is a violation. That is not in alignment with worldwide accepted quality management practices (and also makes audits very painful because statistical, random sampling should be the mode of audit, not 100% review as is currently being done in many instances). FMPA suggests considering statistically based performance metrics as opposed to an unrealistic performance target that does not allow for any failure ever. Due to the shear volume of relays, with 100% performance required, if the standards remain this way, PRC-005 will likely be in the top ten most violated standards for the forever. There is a fundamental flaw in thinking about reliability of the BES. We are really not trying to eliminate the risk of a widespread blackout, we are trying to reduce the risk of a widespread blackout. We plan and operate the system to single and credible double contingencies and to finite operating and planning reserves. To eliminate the risk, we would need to plan and operate to an infinite number of contingencies, and have an infinite reserve margin, which is infeasible. Therefore, by definition, there is a finite risk of a widespread blackout that we are trying to reduce,

	not eliminate, and, by definition, by planning and operating to single and credible double contingencies and finite operating and planning reserves, we are actually defining the level of risk from a statistical basis we are willing to take. With that in mind, it does not make sense to require 100% compliance to avoid a smaller risk (relays) when we are planning to a specified level of risk with more major risk factors (single and credible double contingencies and finite planning and operating reserves).
Segment:	3, 4, 5
Organization:	Wisconsin Electric Power Marketing, Wisconsin Energy Corp., Wisconsin Electric Power Co.
Member:	James R. Keller, Anthony Jankowski, Linda Horn
Comment:	We Energies does not agree to the implementation plan proposed. While it makes common sense to proceed with R1 prior to proceeding with implementing R2, R3, and R4, the timeline to be compliant for R1 is too short. It will take a considerable amount of resources to migrate the maintenance plan from today's standard to the new standard in phase one. ATC recommends that time to develop and update the revised program be increased to at least one year followed by a transition time for the entity to collect all the necessary field data for the protection system within its first full cycle of testing. (In ATC's case would be 6 years) To address phase two, We Energies believes human and technological resources will be overburdened to implement this revised standard as written. The transition to implementing the new program will take another full testing cycle once the program has been updated. Increased documentation and obtaining additional resources to accomplish this will be challenging. Implementation of PRC-005-2 will impact We Energies in the following manner: a. Increase costs: double existing maintenance costs. b. Since there will be a doubling of human interaction (or more), it is expected that failures due to human error will increase, possibly proportionately. c. Breaker maintenance may need to be aligned with protection scheme testing, which will always contain elements that are include in the non-monitored table for 6 yr testing. d. We Energies is developing standards for redundant bus and transformer protection schemes. This would allow We Energies to test the protection packages without taking the equipment out of service. Further if one system fails, there is full redundancy available. With the current version of PRC-005-2, We Energies would need to take an outage to test the protection schemes for a transformer or a bus, there is not an incentive to install redundant schemes. We Energies is working with a condition based breaker maintenance program. This program's value would be greatly diminished under PRC-005-2 as currently written. Consideration also needs to be given for other NERC standards expected to be passed and in the implementation stage at the same time, such as the CIP standards.
Segment:	4, 5

Organization:	Florida Municipal Power Agency
Member:	Frank Gaffney, David Schumann
Comment:	FMPA recommends a negative vote on PRC-005-2, Project 2007-17, for three significant reasons 1. As written, it opens up the PRC-005 standard to Technical Feasibility Exceptions because some batteries are not able to accommodate all of the tests proscribed in the draft standard as explained by Steve Alexanderson in a prior e-mail to the ballot pool. 2. The draft standard would cause NERC to regulate through the standards battery testing, DC circuit testing, etc. on distribution elements with no significant improvement to BES reliability, which is beyond the statutory scope of the standards 3. The standard unreasonably retains the "100% compliance" paradigm for thousands, if not millions of protection system components. Will the Standard Introduce Technical Feasibility Exceptions to PRC Standards? As described by Steve Alexanderson in a prior e-mail to the ballot pool, a large proportion of the batteries (as high as 50% as reported by some SMEs) are not able to accommodate all of the tests prescribed in the draft standard. Will this necessitate the introduction of TFEs into the process unnecessarily? The Standard Reaches Beyond the Statutory Scope of the Reliability Standards As written, the standard requires testing of batteries, DC control circuits, etc., of distribution level protection components associated with UFLS and UVLS. UFLS and UVLS are different than protection systems used to clear a fault from the BES. An uncleared fault on the BES can have an Adverse Reliability Impact and hence; the focus on making sure the fault is cleared is important and appropriate. However, a UFLs or UVLS event happens after the fault is cleared and is an inexact science of trying to automatically restore supply and demand balance (UFLS) or restore voltages (UVLS) to acceptable levels. If a few UFLS or UVLS relays fail to operate out of potentially thousands of relays with the same function, there is no significant impact to the function of UFLS or UVLS. Hence, there is no corresponding need to focus on every little aspect of the UFLS or UVLS systems. Therefore, the only component of UFLS or UVLS that ought to be focused on in the new PRF-005 standard is the UFLS or UVLS relay itself and not distribution class equipment such as batteries, DC control circuitry, etc., and these latter ought to be removed from the standard. In addition, most distribution circuit are radial without substation arrangements that would allow functional testing without putting customers out of service while the testing was underway, or at least without momentary outages while customers were switched from one circuit to another. Therefore, as written, we would be sacrificing customer service for a negligible impact on BES reliability. Perfection is Not A Realistic Goal The standard allows no mistakes. Even the famous six sigma quality management program allows for defects and failures (i.e., six sigma is six standard deviations, which means that statistically, there are events that fall outside of six standard deviations). PRC-005 has been drafted such that any failure is a violation, e.g., 1 day late on a single relay test of tens of thousands of relays is a violation. That is not in

	alignment with worldwide accepted quality management practices (and also makes audits very painful because statistical, random sampling should be the mode of audit, not 100% review as is currently being done in many instances). FMPA suggests considering statistically based performance metrics as opposed to an unrealistic performance target that does not allow for any failure ever. Due to the shear volume of relays, with 100% performance required, if the standards remain this way, PRC-005 will likely be in the top ten most violated standards for the forever. There is a fundamental flaw in thinking about reliability of the BES. We are really not trying to eliminate the risk of a widespread blackout, we are trying to reduce the risk of a widespread blackout. We plan and operate the system to single and credible double contingencies and to finite operating and planning reserves. To eliminate the risk, we would need to plan and operate to an infinite number of contingencies, and have an infinite reserve margin, which is infeasible. Therefore, by definition, there is a finite risk of a widespread blackout that we are trying to reduce, not eliminate, and, by definition, by planning and operating to single and credible double contingencies and finite operating and planning reserves, we are actually defining the level of risk from a statistical basis we are willing to take. With that in mind, it does not make sense to require 100% compliance to avoid a smaller risk (relays) when we are planning to a specified level of risk with more major risk factors (single and credible double contingencies and finite planning and operating reserves).
Segment:	1
Organization:	Keys Energy Services
Member:	Stan T. Rzad
Comment:	As written, is opens up the PRC-005 standard to Technical Feasibility Exceptions because some batteries are not able to accommodate all of the tests proscribed in the draft standard. The draft standard would cause NERC to regulate through the standards battery testing, DC circuit testing, etc. on distribution elements with no significant improvement to BES reliability, which is beyond the statutory scope of the standards The standard unreasonably retains the "100% compliance" paradigm for thousands, if not millions of protection system components.
Segment:	3
Organization:	Municipal Electric Authority of Georgia
Member:	Steven M. Jackson
Comment:	Station DC supply testing was set at three months. A six month time based testing interval is reasonable. Maximum maintenance interval for a lead-acid vented battery is liste at six calendar years. This type of test

	reduces battery life. A 10 to 12 year interval is reasonable. As written this rule would require a TFE that should be administratively unnecessary. Additional clarification is needed in: Control and trip circuits associated with UVLS and UFLS do not require tripping of the breakers but all other protection systems require tripping. Please clarify. Digital relays have electromagnetic output relays - are they categorized as electromechanical or solid state? There needs to be reasonable flexibility based on industry experience in allowing less than 100% perfection in the testing of relays, etc.
Segment:	1
Organization:	American Transmission Company, LLC
Member:	Jason Shaver
Comment:	ATC does not agree to the implementation plan proposed. While it makes common sense to proceed with R1 prior to proceeding with implementing R2, R3, and R4, the timeline to be compliant for R1 is too short. It will take a considerable amount of resources to migrate the maintenance plan from today's standard to the new standard in phase one. ATC recommends that time to develop and update the revised program be increased to at least one year followed by a transition time for the entity to collect all the necessary field data for the protection system within its first full cycle of testing. (In ATC's case would be 6 years) To address phase two, ATC believes human and technological resources will be overburdened to implement this revised standard as written. The transition to implementing the new program will take another full testing cycle once the program has been updated. Increased documentation and obtaining additional resources to accomplish this will be challenging. Implementation of PRC-005-2 will impact ATC in the following manner: a. Increase costs: double existing maintenance costs. b. Since there will be a doubling of human interaction (or more), it is expected that failures due to human error will increase, possibly proportionately. c. Breaker maintenance may need to be aligned with protection scheme testing, which will always contain elements that are include in the non-monitored table for 6 yr testing. d. ATC is developing standards for redundant bus and transformer protection schemes. This would allow ATC to test the protection packages without taking the equipment out of service. Further if one system fails, there is full redundancy available. With the current version of PRC-005-2, ATC would need to take an outage to test the protection schemes for a transformer or a bus, there is not an incentive to install redundant schemes. ATC is working with a condition based breaker maintenance program. This program's value would be greatly diminished under PRC-005-2 as currently written. Consideration also needs to be given for other NERC standards expected to be passed and in the implementation stage at the same time, such as the CIP standards.
Segment:	1

Organization:	Tucson Electric Power Co.
Member:	John Tolo
Comment:	The mention of communication systems maintenance (M1.) needs more clarity as to the depth of the maintenance required. Also, Table 1a, a 3-month interval to verify that the Protection System communications system is functional is too frequent to be practical.
Segment:	4
Organization:	Fort Pierce Utilities Authority
Member:	Thomas W. Richards
Comment:	The requirement for taking intracell readings is not possible for all batteries. Some minor rewording would resolve this issue and make it applicable to those batteries that have internal cell-to-cell straps. I would recommend changing the minimum requirement to take intracell resistance readings from the battery terminals, since identifying the particular cell that is going bad is of little use. I imagine all utilities replace an entire jar, not individual cells. The draft standard would cause NERC to regulate, through the standards battery testing, DC circuit testing, etc. on distribution elements with no significant improvement to BES reliability, which is beyond the statutary scope of the standards The standard unreasonably retains the "100% compliance" paradigm for thousands, if not millions of protection system components. This becomes an investigation, not an audit. There is no way an audit team will have the time to arrive at 100% compliance with a large entity.
Segment:	1, 3, 6
Organization:	Xcel Energy, Inc.
Member:	Gregory L Pieper, Michael Ibold, David F. Lemmons
Comment:	Xcel Energy believes the standard still contains many aspects that are not clearly understood by entities, including what is needed to demonstrate a compliant PSMP. Comments have been submitted concurrently to NERC via the draft comment response form.
Segment:	1, 3, 5, 6
Organization:	Kansas City Power & Light Co.
Member:	Michael Gammon, Charles Locke, Scott Heidtbrink, Thomas Saitta
Comment:	The proposed changes in the Standard are far too prescriptive and does not take into account the multitude of

	manufacturers equipment by establishing broad maintenance cycles and testing intervals.
Segment:	1
Organization:	SCE&G
Member:	Henry Delk, Jr.
Comment:	While SCE&G believes the majority of the PRC-005-2 standard is ready to be affirmed there are still inconsistencies with areas of the standard that need to be corrected prior to approval. These inconsistencies are addressed in SCE&G's comments which have been submitted for the current draft of this standard.
Segment:	1, 3, 4, 6
Organization:	Seattle City Light
Member:	Pawel Krupa, Dana Wheelock, Hao Li, Dennis Sismaet
Comment:	Functional testing is impractical.
Segment:	6
Organization:	Florida Power & Light Co.
Member:	Silvia P Mitchell
Comment:	This standard is too prescriptive and will result in many violations.
Segment:	5
Organization:	Salt River Project
Member:	Glen Reeves
Comment:	SRP believes the requirements of the Standard are confusing and may be problematic in determining compliance. We also believe the required functional testing of the breaker trip coil may potentially increase maintenance outages of circuit breakers. In most cases, circuit breaker maintenance outages can be coordinated such that Protection System maintenance and testing can be done simultaneously. However, in some cases this may not be possible. Outages of any BES facility whether planned or unplanned can impact system reliability. SRP suggests that trip coil monitoring devices be included as an acceptable means of ensuring the trip coil is functioning properly. This will help to avoid unnecessary outages.
Segment:	3
Organization:	Lakeland Electric

Member:	Mace Hunter
Comment:	The proposed draft may introduce TFEs into the PRC standards, not a good thing. The proposed draft reacheds beyound the statutory scope of the reliability standards. Perfection is not a realistic goal.
Segment:	1
Organization:	PPL Electric Utilities Corp.
Member:	Brenda L Truhe
Comment:	PPL EU is voting negative because Rqmt 1.1 "Identify all Protection System components" is too broad and must be clarified and the definition of Protective Relays is not limited to only those devices that use electrical quantities as inputs (exclude pressure, temperature, gas, etc).
Segment:	1
Organization:	Pacific Gas and Electric Company
Member:	Chifong L. Thomas
Comment:	We are concerned over R1.1, where all components must be identified, without a definition for the word component or the granularity specified. While the FAQ gives a definition, and allows for entity latitude in determining the granularity, the FAQ is not part of the standard. We are concerned whether identification is required for every individual component, such as each auxiliary relay, or is it sufficient that the auxiliary relays are included within the scheme that is being tested and documented. Do the auxiliary relays need to be documented within the maintenance database and/or on the actual test reports of schemes being tested? We suggest that the FAQ definitions be included within the standard.

NERC
NORTH AMERICAN ELECTRIC
RELIABILITY CORPORATION

Consideration of Comments on Initial Ballot of PRC-005-2 – Protection System Maintenance

The Protection System Maintenance Standard Drafting Team (PSM SDT) thanks all those who participated in the initial ballot for the proposed revisions to PRC-005 - Protection System Maintenance.

- 87.85% quorum
- 39.35 % weighted segment approval

All comments received with affirmative and negative ballots are included in this report.

All balloters are advised to review the comments and responses in this report as an aid in determining how to participate in the recirculation ballot.

Both a clean and a redline version of the standard that shows the conforming revisions are posted at the following site:

http://www.nerc.com/filez/standards/Protection_System_Maintenance_Project_2007-17.html

Many commenters objected to the establishment of maximum allowable intervals and offered comments on virtually every individual activity and interval within the Tables. The SDT responded that "FERC Order 693 and the approved SAR assigned the SDT to develop a Standard with maximum allowable intervals and minimum maintenance activities." In an effort to provide more clarity, the SDT also completely revised the Tables of maximum maintenance intervals/minimum maintenance activities, and made numerous other changes throughout the draft Standard. Many commenters also indicated a preference for much of the information that is currently contained within the reference documents to be included within the Standard itself. The SDT responded by including the definitions of terms exclusively used within this standard, specifically "component type", "component", "segment", "maintenance correctable issue", and "countable event", , within the body of the standard. Numerous comments were also offered, proposing that the VSLs allow for some amount of non-compliance with the Standard before incurring a violation. The SDT responded by stating that: "The NERC criteria for VSLs do not currently permit them to allow some level of non-performance without being in violation."

If you feel that your comment has been overlooked, please let us know immediately. Our goal is to give every comment serious consideration in this process! If you feel there has been an error or omission, you can contact the Vice President and Director of Standards, Herbert Schrayshuen, at 609-452-8060 or at herb.schrayshuen@nerc.net. In addition, there is a NERC Reliability Standards Appeals Process.[1]

[1] The appeals process is in the Reliability Standards Development Procedures: http://www.nerc.com/standards/newstandardsprocess.html.

Segment:	1
Organization:	International Transmission Company Holdings Corp
Member:	Michael Moltane
Comment:	While voting affirmative due to the improvements over the existing standards, we do have the following comments. We hope the Standards Team can take these comments and suggested improvements into account although we did not get our comments in during the official comment period due to confusion over the overlapping comment/ballot period. The following are ITC Holdings comments corresponding the questions on the comment form: Regarding Question #1: ITC Holdings does not agree with the 6 year time interval for functional testing of the control and trip circuits. It has been our experience that trip failures are rare and that our present 10 year control, trip tests, and other related testing are sufficient in verifying the integrity of the scheme. A scheme that is 100% microprocessor relays except for 1 electromechanical AR or SG relay would be forced to a 6 year interval instead of a 12 year interval. This seems unreasonable for schemes that are otherwise identical. Comments on Question #4: ITC Holdings agrees with the measure and data retention requirements assuming that the requirements only apply to test data after the effective date of the approved standard. Comments on Question #7: It should clearly state in the definition or elsewhere in the standard that automatic ground switches intended to protect the BES are to be considered interrupting devices. This is stated in the Supplemental Reference but the Supplemental Reference is not part of the standard. Please consider splitting the first row in Table 1a (Protective Relays) into 2 separate rows, one for relays other than microprocessor and the other for microprocessor relays. • Include the sentence “Verify that settings are as specified.” In both rows to be clear that this applies to both categories. (The following is intended to be helpful information only not to be included in the comments) The following provides a clue as to what Time Horizon means: From: http://www.nerc.com/docs/pc/ris/Order_890-A_pro_forma_Attachment_C.doc (1) A detailed description of the specific mathematical algorithm used to calculate firm and non-firm ATC (and AFC, if applicable) for its

	scheduling horizon (same day and real-time), operating horizon (day ahead and pre-schedule) and planning horizon (beyond the operating horizon); See Definition at: http://www.nerc.com/files/Time_Horizons.pdf Copy below: Time Horizons Time Horizons are used as a factor in determining the size of a sanction. If an entity violates a requirement and there is no time to mitigate the violation because the requirement takes place in real-time, then the sanction associated with the violation is higher than it would be for violation of a requirement that could be mitigated over a longer period of time. When establishing a time horizon for each requirement, the following criteria should be used: 1. Long-term Planning — a planning horizon of one year or longer. 2. Operations Planning — operating and resource plans from day-ahead up to and including seasonal. 3. Same-day Operations — routine actions required within the timeframe of a day, but not real-time. 4. Real-time Operations — actions required within one hour or less to preserve the reliability of the bulk electric system. 5. Operations Assessment — follow-up evaluations and reporting of real time operations.
Response:	Thank you for your comment. Question #1 - The Tables have been rearranged and considerably revised to improve clarity. Please see new Table 1-5. The SDT believes that mechanical solenoid-operated devices share performance attributes (and failure modes) with electromechanical relays and need to be tested at similar intervals. Performance-based maintenance is an option to increase the intervals if the performance of these devices supports those intervals. Question #4 – The SDT believes that entities cannot be expected to initially have data for requirements that did not previously exist. Question #7 – From a mandatory perspective, this is dependent on the regional BES definitions and on what those definitions may describe to be “transmission Protection Systems.” • The Tables have been rearranged and considerably revised to improve clarity. Please see new Table 1-1. Time Horizon – Thank you for your input.
Segment:	5
Organization:	U.S. Bureau of Reclamation
Member:	Martin Bauer

Comment:	1. There is no reliability based justification to alter the standards to require practices of a subset of entities as allowable intervals. It is incredible that the standard would suppose that requiring the use of weighted average practice of some subset of all entities could reasonable. The purpose of a reliability standard is to ensure the reliability of the BES. There is no indication that the existing standard has posed a threat to the reliability of the BES. There is no data which indicates that the BES reliability is impacted because of certain maintenance practices. The SDT has chosen an approach which has statistical merit and is good information for entities to consider in reviewing their maintenance program. To force an entity to enhance its maintenance program because some subsets of entities have a different program is contrary to the purpose authorized by the Energy Policy Act of 2005. The variables of each entity faces when developing their maintenance practice intervals cannot be calculated through statistical analysis. To presume that the end result (the interval itself) can be applied to other entities ignores the sound decisions made internally to each entity that results in final interval. The standard should return to addressing real reliability impacts as required by law. The desire to improve maintenance programs offers a unique problem to the FERC and regulatory world. The knee jerk reaction is to define a "universal" interval based on some statistical method. What happens if the solution is bad, who will accept the consequences that narrow prescription was wrong and the interval caused a reliability impact. It would no longer be the Entity. The standard does not make such an allowance. History is replete with examples of this type of micro managing. Rather than fall into the same trap, and suffer the consequences of the unknown, it is suggested to allow Entities to optimize their programs to ensure reliability of the BES. If the NERC wants to create a reliability based standard that addresses reliability impacts, the SDT is encouraged to create a standard of "disallowed" practices. These would be practices which have a demonstrated impact on reliability. The SDT should spend to analyzing maintenance practices which have a known impact on reliability (as evidenced by disturbance reports) and develop requirements which disallow such practices or range of practices. In addition, if it is shown that an event in which BES reliability was impacted by the utilities PSMP (as evidenced by disturbance reports), the utility would be required to submit to the RRO a corrective action plan which addresses how the PSMP will be revised and when compliance with that PSMP is to be achieved. 2. The intervals prescription for performance based PSMP virtually eliminates the capability of smaller utilities that do not have a large equipment database to justify a performance based system that may be sound based on their experience. This overly prescriptive approach should be eliminated and return to allowing utilities to justify their programs. 3. The Time Horizons are too narrow for the implementation of the standard as written. The SDT appears to

	have not accounted for the data analysis associated with performance based systems. The data collection, analysis, and subsequent decisions associated development of a maintenance program and its justification do not occur overnight especially with larger utilities. In addition, this new standard will require complete rewrite of an entities internal maintenance programs. The internal processes associated with these vary based on the size of the entity and its organizational structure. 4. Since this standard is so invasive into the internal decisions concerning maintenance, the standard should allow at least 18 months for entities to rewrite their internal maintenance programs to meet the program development requirements and 18 months to train the staff in the new program, incorporate the program into the entities compliance processes, and to implement the new program.
Response:	Thank you for your comment. 1. FERC directed the SDT to establish maximum time intervals between maintenance activities. The SDT recognized that different types of equipment, different generations of equipment, different failure modes of equipment, and different versions of time-based maintenance had to be considered. The SDT agrees with the commenter that the Standard allows statistical analysis, and performance-based maintenance allows an entity to create time intervals that could exceed any "weighted-averages" time-based intervals. The Supplementary Reference adds a Section 9 to show how an entity can create a performance-based maintenance interval. 2. FERC directed the SDT to establish maximum time intervals between maintenance activities. Smaller entities may aggregate their component populations with other entities having similar programs – see Section 9 of the Supplementary Reference document and FAQ IV.3.A. Entities are not required to use performance-based PSMPs; this option is made available to entities who wish to use it. 3. Your comment appears to address the Implementation Plan, not Time Horizons. The Implementation Plan for Requirement R1 has been extended from three months to twelve months. For performance-based programs, Attachment A specifies that there must first be acceptable results, and that a time-based program (per the Tables) must be used until then. See FAQ IV.3.B. 4. The Implementation Plan for Requirement R1 has been extended from three months to twelve months.
Segment:	5
Organization:	South Mississippi Electric Power Association
Member:	Jerry W Johnson
Comment:	The proposed Standard is overly prescriptive and too complex to be practically implemented. An entity

	making a good faith effort to comply will have to navigate through the complexities and nuances, as illustrated by the extensive set of documents the SDT has provided in an attempt to explain all the requirements and nuances. The need for an extensive “Supplementary Reference Document” and an extensive “Frequently Asked Questions Document”, in addition to 13 pages of tables and an attachment in the standard itself, illustrate that the proposal is too prescriptive and complex for most entities to practically implement. 1. The descriptions for the "type of protection system components" do not appear to be consistent between Tables, 1a, 1b and 1c. 2. The maximum maintenance interval for a lead-acid vented battery is listed at 6 calendar years for performing a capacity test. This type of test has been proven to reduce battery life and an interval of 10 to 12 years would be better. 3. The maximum maintenance interval for "Station DC supply" was set at 3 months. This is too short of a period and 6 months would be better. 4. The control and trip circuits associated with UVLS and UFLS do not require tripping of the breakers but all other protection systems require tripping of the breakers, this appears to be inconsistent? 5. Digital relays have electromagnetic output relays. Do they fall into the electromechanical trip or solid state trip? 6. Need for clarification: The standard indicates that only voltage and current signals need to be verified. Does this mean that voltage and current transformers do not need to be tested by applying a primary signal and verifying the secondary output? 7. With regard to DPs who own transmission Protection Systems, the standard is still very unclear on when a DP owns a transmission Protection System. Many DPs own equipment that is included within the definition of a Protection System; however, ownership of such equipment does not necessarily translate directly into a transmission Protection System under the compliance obligations of this standard. DPs need to know if this standard applies to them and right now, there is no certain way of determining that from within this language or previous versions of this standard.

	8. The phrase "Verify Battery cell-to-cell connection resistance" has entered the table where it did not exist before. On some types of stationary battery units, this internal connection is inaccessible. On other types the connections are accessible, but there is no way to repair them based on a bad reading. And bad cell-to-cell connections within units will be detected by the other required tests. This requirement will cause entities to scrap perfectly good batteries just so this test can be performed, with no corresponding increase in bulk electric system reliability while taking an unnecessary risk to personnel and the environment. And because buying battery units composed of multiple cells allows space saving designs, entities may be forced to buy smaller capacity batteries to fit existing spaces. This may end up having a negative effect on reliability. Suggest substituting "unit-to-unit" wherever "cell-to-cell" is used in the table now. 9. The level 2 table regarding Protection Station dc supply states that level 1 maintenance activities are to be used, but then goes on to give a list of Maintenance Activities that don't match those in level 1. Which activities shall we use? 10. Same situation for Station DC Supply (battery is not used) where the 18 month interval is missing. IEEE battery maintenance standards call for quarterly inspections. These are targets, though, not maximums. An entity wishing to avoid non-compliance for an interval that might extend past three calendar months due to storms and outages must set a target interval of two months thereby increasing the number of inspections each year by half again. This is unnecessarily frequent.
Response:	Thank you for your comments. FERC Order 693 and the approved SAR assign the SDT to develop a Standard with maximum allowable intervals and minimum maintenance activities. 1. The Tables have been rearranged and considerably revised to improve clarity. Please see new Tables 1-1 through 1-5. 2. The SDT disagrees. 3. The SDT disagrees. 4. Your observation is correct. The Tables have been rearranged and considerably revised to improve clarity. Please see new Table 1-5. This is an intentional difference between UFLS/UVLS and the remainder of the Protection Systems addressed within the Standard, because of the distributed nature of UFLS/UVLS and because these devices are usually tripping distribution system elements 5. The Tables have been rearranged and considerably revised to improve clarity. Please see new Table 1-1. 6. Your observation is correct. 7. Your concern seems to be primarily related to the applicable regional BES definition.

	8. The Tables have been rearranged and considerably revised to improve clarity. Please see new Table 1-4. "Cell" has been replaced with "cell/unit" to address this concern. 9. The Tables have been rearranged and considerably revised to improve clarity. Please see new Table 1-4. 10. The SDT disagrees. You should complete the activities within the intervals specified.
Segment:	5
Organization:	RRI Energy
Member:	Thomas J. Bradish
Comment:	For PRC-005-2, while there is nothing inherently wrong with the requirements, RRI voted affirmative with concern. Our concern is we believe that rather than fixing the issues that caused the 2003 blackout, there is a continual drift to extensive micro-management to take control of every aspect of the entire industry through regulation in the name of reliability. I believe the documentation required to demonstrate 100% compliance to this standard will be a serious challenge to achieve uniformly for so many components across a widely dispersed fleet, especially in the punitive, zero-tolerance compliance world that presently exists. It only takes the things we are in short supply: time, money, and people. It will drive industry to better systems and performance, but there will be a painful price, especially on the development side. An example of the impact of this standard: station power plant batteries are sized to carry large DC loads with the protection system as only a small fraction of the load profile. Rather than performing a risk assessment for station with low capacity factors (for example RRI has a two unit station that had an average capacity factor in 2009 of 1.72%) after the battery slightly crosses over its degradation threshold, there will be no choice but an immediate and expensive replacement. This type of requirement will push many units into pre-mature retirement or mothballing.
Response:	Thank you for your comment.
Segment:	3
Organization:	Tampa Electric Co.
Member:	Ronald L Donahey
Comment:	The level of DC circuit testing required every time the relay is tested represents potentially a negative impact to reliability given the complicated control circuitry in an energized station. Even though you take out an element out of service, the DC control circuits are often interconnected for functions such as breaker failure,

	bus and transformer lockouts, etc. This level of testing needs to be done when initial construction but this increase in testing is not justifiable given the reliability risk and cost. TEC's record for misoperations do to circuitry failure does not support this need.
Response:	Thank you for your comment. The Tables have been rearranged and considerably revised to improve clarity. Please see new Table 1-5. The SDT believes that mechanical solenoid-operated devices share performance attributes (and failure modes) with electromechanical relays and need to be tested at similar intervals. Performance-based maintenance is an option to increase the intervals if the performance of these devices supports those intervals.
Segment:	5
Organization:	Salt River Project
Member:	Glen Reeves
Comment:	SRP believes the requirements of the Standard are confusing and may be problematic in determining compliance. We also believe the required functional testing of the breaker trip coil may potentially increase maintenance outages of circuit breakers. In most cases, circuit breaker maintenance outages can be coordinated such that Protection System maintenance and testing can be done simultaneously. However, in some cases this may not be possible. Outages of any BES facility whether planned or unplanned can impact system reliability. SRP suggests that trip coil monitoring devices be included as an acceptable means of ensuring the trip coil is functioning properly. This will help to avoid unnecessary outages.
Response:	Thank you for your comment. The Tables have been rearranged and considerably revised to improve clarity. Please see new Table 1-5. The SDT believes that mechanical solenoid-operated devices share performance attributes (and failure modes) with electromechanical relays and need to be tested at similar intervals. Performance-based maintenance is an option to increase the intervals if the performance of these devices supports those intervals.
Segment:	1, 3, 4, 6
Organization:	Seattle City Light
Member:	Pawel Krupa, Dana Wheelock, Hao Li, Dennis Sismaet
Comment:	Functional testing is impractical.

Response:	Thank you for your comment. Functional testing is not the only means of completing the required maintenance, although it may be the most practical.
Segment:	3
Organization:	JEA
Member:	Garry Baker
Comment:	JEA does not believe the standard adequately addresses issues like component, FAQ, etc as identified below: 1. R1.1 Identify all Protections System components. What is meant by Protection System component? Is a component a wire, contact, device, etc. A list of components as intended by the SDT would be illustrative in understanding the SDT's intent of what a component includes. 2. Are the FAQ and Supplemental Reference going to be adopted as part of this standard? These documents contain information that is critical to the proper understanding and interpretation of the standard, thus either the standard needs to be rewritten to include this information, or the FAQ and Supplemental Reference need to be adopted as part of this standard. Any inconsistencies between the FAQ and the standard, as written, would need to be corrected. 3. The maximum maintenance interval for a lead-acid vented battery is listed as 6 calendar years for performing a capacity test. This type of test has been proven to reduce battery life and a longer capacity test interval of 10 to 12 years would be better, allowing for longer battery life. 4. The implementation period for R1.1 of 3 months is too short and should be extended to one calendar year; of course this is dependent on the complexity of items listed as part of the definition of "Protection System component."
Response:	Thank you for your comment. 1. A definition of "Component" has been added to the draft Standard. The SDT's intent is that this definition will be used only in PRC-005-2, and thus will remain with the Standard when approved, rather than being relocated to the Glossary of Terms. 2. These documents provide supporting discussion, but are not part of the Standard. The SDT intends that these be posted as Reference Documents, accompanying the Standard.

	3. The SDT disagrees. 4. The Implementation Plan for Requirement R1 has been modified from three months to twelve months.
Segment:	5
Organization:	Public Utility District No. 1 of Lewis County
Member:	Steven Grega
Comment:	1. As written PRC-005-2 does not recognize or accommodate the many type of batteries in use at substations. To accommodate many of the prescribed tests, the batteries would have to be disassembled to conduct the test with little valuable information gained. Suggest wording only saying the batteries should be periodically test to assure that they perform as designed. Let the entities' engineers decide on what is most appropriate for their batteries. 2. Having a standard that requires 100% compliance on 1000's of components is a good way of assuring many violations. Most protective system can function with half the protection in service. Typically most engineers over design and have backup upon backup on critical elements. Suggest standard require a lesser compliance rate; say 90% to 95% during an audit. The elements not in compliance could be followed by a 12 month plan to bring other elements into compliance but the entity at 90% to 95% would still be found compliant. In summary, this proposed standard has gone beyond the reasonably level of regulation by NERC. Therefore, I am voting not to affirm the revision to this standard.
Response:	Thank you for your comment. 1. The Tables have been rearranged and considerably revised to improve clarity. Please see new Table 1-4. 2. The NERC criteria for VSLs do not currently permit them to allow some level of non-performance without being in violation.
Segment:	3
Organization:	City of Farmington
Member:	Linda R. Jacobson
Comment:	As written, is opens up the PRC-005 standard to Technical Feasibility Exceptions because some batteries are not able to accommodate all of the tests proscribed in the draft standard as explained by Steve Alexanderson in a prior e-mail to the ballot pool. The draft standard would cause NERC to regulate through the standards

	battery testing, DC circuit testing, etc. on distribution elements with no significant improvement to BES reliability, which is beyond the statutory scope of the standards
Response:	Thank you for your comment. The Tables have been rearranged and considerably revised to improve clarity. Please see new Table 1-4. "Cell" has been replaced with "cell/unit" to address this concern. The Standard only addresses distribution-located devices to the degree that they address BES issues. UFLS and UVLS per the relevant NERC Standards are frequently implemented on the distribution system.
Segment:	1
Organization:	Pacific Gas and Electric Company
Member:	Chifong L. Thomas
Comment:	The requirements in the latest draft are confusing and at times seem to be in conflict with other requirements. From a compliance and enforcement perspective, this confusion would make the standard difficult to audit. 1. We are concerned over R1.1, where all components must be identified, without a definition for the word component or the granularity specified. While the FAQ gives a definition, and allows for entity latitude in determining the granularity, the FAQ is not part of the standard. We are concerned whether identification is required for every individual component, such as each auxiliary relay, or is it sufficient that the auxiliary relays are included within the scheme that is being tested and documented. Do the auxiliary relays need to be documented within the maintenance database and/or on the actual test reports of schemes being tested? We suggest that the FAQ definitions be included within the standard. 2. We agree with most of the changes from the last draft in Table 1a, 1b and 1c. However, the phrase "Verify Battery cell-to-cell connection resistance" has entered the table where it did not exist before. On some types of stationary battery units, this internal connection is inaccessible. On other types the connections are accessible, but there is no way to repair them based on a bad reading. And bad cell-to-cell connections within units will be detected by the other required tests. This requirement will cause entities to scrap perfectly good batteries just so this test can be performed, with no corresponding increase in bulk electric system reliability while taking an unnecessary risk to personnel and the environment. And because buying battery units composed of multiple cells allows space saving designs, entities may be forced to buy smaller capacity batteries to fit existing spaces. This may end up having a negative effect on reliability. Suggest substituting "unit-to-unit" wherever "cell-to-cell" is used in the table now.

	3. The level 1 table regarding Control and trip circuits with electromechanical trip or auxiliary contacts now includes exception for microprocessor relays, but there is no listing for the requirements for microprocessor relays. 4. The level 2 table regarding Protection Station dc supply states that level 1 maintenance activities are to be used, but then goes on to give a list of Maintenance Activities that don't match those in level 1. Which activities shall we use? 5. Same situation for Station DC Supply (battery is not used) where the 18 month interval is missing.
Response:	Thank you for your comment. 1. Requirement R1, part 1.1, has been revised to state, "Address all Protection System component types" in consideration of your comment. 2. The Tables have been rearranged and considerably revised to improve clarity. Please see new Table 1-4. "Cell" has been replaced with "cell/unit" to address this concern. 3. The Tables have been rearranged and considerably revised to improve clarity. Please see new Tables 1-1 and 1-5. 4. The Tables have been rearranged and considerably revised to improve clarity. Please see new Table 1-4. 5. The Tables have been rearranged and considerably revised to improve clarity. Please see new Table 1-4.
Segment:	5
Organization:	Pacific Gas and Electric Company
Member:	Richard J. Padilla
Comment:	The level of detail of this standard is over the top and currently conflicts with other standards and is open for future conflicts. We recommend that the standard DT evaluate the basic rational for the standard and limit its scope. Some examples are: 1. As written, is opens up the PRC-005 standard to Technical Feasibility Exceptions because some batteries are not able to accommodate all of the tests proscribed in the draft standard as explained by Steve Alexanderson in a prior e-mail to the ballot pool. The draft standard would cause NERC to regulate through the standards battery testing, DC circuit testing, etc. on distribution elements with no significant

	improvement to BES reliability, which is beyond the statutory scope of the standards 2. The standard unreasonably retains the "100% compliance" paradigm for thousands, if not millions of protection system components as written, the standard requires testing of batteries, DC control circuits, etc., of distribution level protection components associated with UFLS and UVLS. UFLS and UVLS are different than protection systems used to clear a fault from the BES. An uncleared fault on the BES can have an Adverse Reliability Impact and hence; the focus on making sure the fault is cleared is important and appropriate. However, a UFLs or UVLS event happens after the fault is cleared and is an inexact science of trying to automatically restore supply and demand balance (UFLS) or restore voltages (UVLS) to acceptable levels. If a few UFLS or UVLS relays fail to operate out of potentially thousands of relays with the same function, there is no significant impact to the function of UFLS or UVLS. Hence, there is no corresponding need to focus on every little aspect of the UFLS or UVLS systems. Therefore, the only component of UFLS or UVLS that ought to be focused on in the new PRF-005 standard is the UFLS or UVLS relay itself and not distribution class equipment such as batteries, DC control circuitry, etc., and these latter ought to be removed from the standard. 3. In addition, most distribution circuit are radial without substation arrangements that would allow functional testing without putting customers out of service while the testing was underway, or at least without momentary outages while customers were switched from one circuit to another. Therefore, as written, we would be sacrificing customer service for a negligible impact on BES reliability
Response:	Thank you for your comment. 1. The Tables have been rearranged and considerably revised to improve clarity. Please see new Table 1-4. “Cell” has been replaced with “cell/unit” to address this concern. The Standard only addresses distribution-located devices to the degree that they address BES issues. UFLS and UVLS per the relevant NERC Standards are frequently implemented on the distribution system. 2. The NERC criteria for VSLs do not currently permit them to allow some level of non-performance without being in violation. 3. Functional testing is not the only means of completing the required maintenance, although it may be the most practical.
Segment:	5
Organization:	Indeck Energy Services, Inc.
Member:	Rex A Roehl
Comment:	As discussed at the FERC Technical Conference on Standards Development, the goal of the standards

	program is to avoid or prevent cascading outages--specifically not loss of load. The expansion of this standard deviates significantly from its purpose of maintaining protective systems that affect BES reliability. It doesn't recognize that not all relays affect reliability. If reliability is measured by a Reportable Disturbance, then the threshold varies by control area--largest contingency. The standard should include a process, not unlike the risk based assessment in CIP-002-2 R1, to include as "identified components" only those affecting reliability. All of the various reliability criteria should be considered.
Response:	Thank you for your comment. "BES reliability" is more than simply avoiding "cascading outages" – as illustrated by the approved definition of "Adequate Level of Reliability" as promulgated by the NERC Planning and Operating Committees in response to a directive from FERC, and as described in Section 215 of the Federal Power Act.
Segment:	5
Organization:	Black Hills Corp
Member:	George Tatar
Comment:	1. Draft is confusing & seems to conflict with other requirements. Table 1b Maint. Activities needs to define whether all protection logic or conditions would initiate a relay trip output are required to be simulated & tested to the relay tripping output contact. 2. The Attachment A definition of "common factors" is way too broad to be utilized in defining a grouping of protection system devices.
Response:	Thank you for your comments. 1. The Tables have been rearranged and considerably revised to improve clarity. Please see new Table 1-5. 2. The SDT is not clear whether your concern is about "common factors" as used in the definition of "Segment." See Section 9 of the Supplementary Reference document for a discussion of performance-based maintenance.
Segment:	4
Organization:	Wisconsin Energy Corp.
Member:	Anthony Jankowski
Comment:	1. Table 1a, Protective Relays: Change 1st line to: "Test and calibrate if necessary the relays…"

	Table 1a & 1b, Protective Relays: 3rd line: Change “check the relay inputs…” to “verify the relay inputs…” The term “check” is not defined, whereas “verify” is. Tables 1a & 1b We agree that six / twelve years is an acceptable interval for relay maintenance. Table 1a & 1b, Control & Trip Circuits: The proposed addition to require tripping circuit breakers during Protection System maintenance will require outages and is therefore detrimental to BES reliability and should be removed. – Generating unit protection system maintenance is done during scheduled outages. The high voltage breaker on a generating unit often remains energized to back feed and supply station auxiliaries when the generator is offline. The proposed requirement will increase the amount of equipment requiring an outage for maintenance, and possibly the length of the outage, resulting in significantly more equipment out of service as well as increased costs. This requirement also results in greater maintenance efforts and costs when there are redundant protection system equipment (breaker trip coils, lockout relays, etc), which is contrary to good practice and reliability. – Many of the breakers that We Energies, as the Distribution Provider, trips from its BES protection systems are not owned by We Energies and are owned by a separate transmission company. The trip testing and maintenance of the transmission company may not coincide with our relay maintenance testing program. The standard shall have allowances for the entity to ONLY test or maintain equipment that it OWNS! Table 1a, Station dc supply: – The activity to verify the state of charge of battery cells is too vague, and requires more specific action. We assume that the drafting committee is recommending specific gravity measurements. Specific gravity measurements have not been shown to be an accurate indicator of state of charge. In addition, as shown in the nuclear power industry, there is no established corrective action that is taken based on specific gravity results (eg. Don’t require a test where there is no acceptable corrective action). – The activities to “verify battery continuity” and “check station dc supply voltage” are also vague and need to be more clearly specified what is intended. – The 3 month time interval for battery impedance testing is too frequent. 18 month or annual testing is more appropriate.

	– The 3 calendar year performance or service test is too frequent and will actually remove life from a battery and reduce reliability. Recommend capacity testing no more that every 5 years and more frequent test if the capacity is within 10% of the end of life or design. This is consistent with the nuclear power industry. Table 1b, Station dc supply: – Recommend a change or addition to Table 1b - Recommend a level 2 monitoring (not just a default to the level 1 maintenance activities) which allows for the removal of quarterly "check" of electrolyte levels, DC supply voltage, and DC grounds - if station DC supply (charger) voltage is continuously monitored (eg. one should not have detrimental gassing of a battery if the float voltage of the battery is properly set and monitored). Table 1a, Associated communications systems: The requirement to verify functionality every three months is excessive; verifying this every twelve months is adequate. Tables 1a & 1b – Although the latest standard provided some additional clarification, more clarification is required on what maintenance / testing is ONLY required for UFLS/UVLS protection systems vs. BES protection systems (eg. UFLS / UVLS systems – Is a verification of proper voltage of the DC supply the only battery or DC supply test required (e.g. no state of charge, float voltage, terminal resistance, electrolyte level, grounds, impedance or performance test, etc.) – The requirement to retain data for the two most recent maintenance cycles is excessive. The required data should be limited to the complete data for the most recent cycle, and only the test date for the previous cycle. 2. We Energies does not agree to the implementation plan proposed. While it makes common sense to proceed with R1 prior to proceeding with implementing R2, R3, and R4, the timeline to be compliant for R1 is too short. It will take a considerable amount of resources to migrate the maintenance plan from today's standard to the new standard in phase one. ATC recommends that time to develop and update the revised program be increased to at least one year followed by a transition time for the entity to collect all the necessary field data for the protection system within its first full cycle of testing. (In ATC's case would be 6 years) To address phase two, We Energies believes human and technological resources will be

	overburdened to implement this revised standard as written. The transition to implementing the new program will take another full testing cycle once the program has been updated. Increased documentation and obtaining additional resources to accomplish this will be challenging. Implementation of PRC-005-2 will impact We Energies in the following manner: a. Increase costs: double existing maintenance costs. b. Since there will be a doubling of human interaction (or more), it is expected that failures due to human error will increase, possibly proportionately. c. Breaker maintenance may need to be aligned with protection scheme testing, which will always contain elements that are include in the non-monitored table for 6 yr testing. d. We Energies is developing standards for redundant bus and transformer protection schemes. This would allow We Energies to test the protection packages without taking the equipment out of service. Further if one system fails, there is full redundancy available. With the current version of PRC-005-2, We Energies would need to take an outage to test the protection schemes for a transformer or a bus; there is not an incentive to install redundant schemes. We Energies is working with a condition based breaker maintenance program. This program's value would be greatly diminished under PRC-005-2 as currently written. 3. Consideration also needs to be given for other NERC standards expected to be passed and in the implementation stage at the same time, such as the CIP standards.
Response:	Thank you for your comment. 1. The Tables have been rearranged and considerably revised to improve clarity. Please see new Table 1-5. 2. The Implementation Plan for Requirement R1 has been changed from three months to twelve months. 3. This issue should be presented to the NERC Standards Committee.
Segment:	3, 5
Organization:	Wisconsin Electric Power Marketing, Wisconsin Electric Power Co.
Member:	James R. Keller, Linda Horn
Comment:	1. Table 1a, Protective Relays: Change 1st line to: "Test and calibrate if necessary the relays…" Table 1a & 1b, Protective Relays:

	3rd line: Change “check the relay inputs…” to “verify the relay inputs…” The term “check” is not defined, whereas “verify” is. Tables 1a & 1b We agree that six / twelve years is an acceptable interval for relay maintenance. Table 1a & 1b, Control & Trip Circuits: The proposed addition to require tripping circuit breakers during Protection System maintenance will require outages and is therefore detrimental to BES reliability and should be removed. Generating unit protection system maintenance is done during scheduled outages. The high voltage breaker on a generating unit often remains energized to back feed and supply station auxiliaries when the generator is offline. The proposed requirement will increase the amount of equipment requiring an outage for maintenance, and possibly the length of the outage, resulting in significantly more equipment out of service as well as increased costs. This requirement also results in greater maintenance efforts and costs when there are redundant protection system equipment (breaker trip coils, lockout relays, etc), which is contrary to good practice and reliability. Many of the breakers that We Energies, as the Distribution Provider, trips from its BES protection systems are not owned by We Energies and are owned by a separate transmission company. The trip testing and maintenance of the transmission company may not coincide with our relay maintenance testing program. The standard shall have allowances for the entity to ONLY test or maintain equipment that it OWNS! Table 1a, Station dc supply: – The activity to verify the state of charge of battery cells is too vague, and requires more specific action. We assume that the drafting committee is recommending specific gravity measurements. Specific gravity measurements have not been shown to be an accurate indicator of state of charge. In addition, as shown in the nuclear power industry, there is no established corrective action that is taken based on specific gravity results (eg. Don’t require a test where there is no acceptable corrective action). – The activities to “verify battery continuity” and “check station dc supply voltage” are also vague and need to be more clearly specified what is intended. – The 3 month time interval for battery impedance testing is too frequent. 18 month or annual testing is more appropriate.

	– The 3 calendar year performance or service test is too frequent and will actually remove life from a battery and reduce reliability. Recommend capacity testing no more that every 5 years and more frequent test if the capacity is within 10% of the end of life or design. This is consistent with the nuclear power industry. Table 1b, Station dc supply: – Recommend a change or addition to Table 1b - Recommend a level 2 monitoring (not just a default to the level 1 maintenance activities) which allows for the removal of quarterly "check" of electrolyte levels, DC supply voltage, and DC grounds - if station DC supply (charger) voltage is continuously monitored (eg. one should not have detrimental gassing of a battery if the float voltage of the battery is properly set and monitored). Table 1a, Associated communications systems: The requirement to verify functionality every three months is excessive; verifying this every twelve months is adequate. Tables 1a & 1b – Although the latest standard provided some additional clarification, more clarification is required on what maintenance / testing is ONLY required for UFLS/UVLS protection systems vs. BES protection systems (e.g. UFLS / UVLS systems – Is a verification of proper voltage of the DC supply the only battery or DC supply test required (e.g. no state of charge, float voltage, terminal resistance, electrolyte level, grounds, impedance or performance test, etc.) 2. The requirement to retain data for the two most recent maintenance cycles is excessive. The required data should be limited to the complete data for the most recent cycle, and only the test date for the previous cycle.
Response:	Thank you for your comment. 1. The Tables have been rearranged and considerably revised to improve clarity. Please see new Table 1-5. 2. In order that a Compliance Monitor can be assured of compliance, the SDT believes that the Compliance Monitor will need the data of the most recent performance of the maintenance, as well as the data of the preceding one, as well as data to validate that entities have been in compliance since the last audit (or currently, since the beginning of mandatory compliance). The SDT has specified the data

	retention in the posted Standard to establish this level of documentation.
Segment:	1, 6
Organization:	Great River Energy
Member:	Gordon Pietsch, Donna Stephenson
Comment:	1. In Table 1a section-Station DC Supply – 18 calendar months, under Maintenance Activities column, suggest changing under Verify: Battery terminal connection resistance To: Entire battery bank terminal connection resistance (This could have been interpreted as individual batteries) And change: Battery cell-to-cell connection resistance To: Battery cell-to-cell connection resistance, where an external mechanical connection is available. 2. In Table 1a-Station dc supply (that has a component Valve Regulated Lead-Acid batteries) suggest changing Max Maintenance Interval=3 Calendar Years or 3 Calendar Months to 4 Calendar Years or 12 Calendar Months. Our concern is that the insurance companies may push NERC maintenance intervals on all battery banks not associated with the BES. 3. Table 1a-Station dc supply (that has as a component Lead-Acid batteries) Max Maintenance Interval=6 Calendar Years suggest changing to 10 Calendar Years. Reason: performance tests may degrade the battery. 4. Table 1a-Station dc supply (that has as a component Nickel-Cadmium batteries) Max Maintenance Interval=6 Calendar Years suggest changing to 10 Calendar Years. Reason: performance tests may degrade the battery. 5. Table 1b -Level 2 Monitoring Attributes for Component in the row labeled (Control and trip circuitry) we suggest the following change: If a trip circuit comprises multiple paths, at least one of those paths is monitored. Alarming for loss of continuity or dc supply for trip circuits is reported to a location where action can be taken. 6. While all tripping circuits are not completely monitored, the trip coils and the outdoor cable runs are completely monitored. The only portion that would not be monitored is a portion of inter and intra-panel wiring having no moving parts located in a control house. Our company has extremely low failure rate of panel wiring and terminal lugging. I don't think that there is provision for moving control and trip circuitry to performance based maintenance? This control circuitry should be maintained less frequent than un-monitored trip circuits (6 years).

Response:	Thank you for your comment. 1.The Tables have been rearranged and considerably revised to improve clarity. Please see new Table 1-4. This element of the table has been modified to state, "Battery internal cell-to-cell or unit-to-unit connection resistance (where available to measure)" to address this comment. 2. NERC Standards are limited to facilities and equipment related to the BES. How the Standard may be otherwise used is outside the scope of NERC Standards. 3. The SDT disagrees, and believes that a performance test at 6-year intervals is appropiate for Vented Lead Acid and Ni-Cad batteries. A properly maintained battery, according to various credible references (from IEEE, EEI, EPRI, various manufacturers, etc.), can easily handle multiple deep discharges over its expected life. 4. The SDT disagrees, and believes that a performance test at 6-year intervals is appropiate for Ni-Cad batteries. A properly maintained battery, according to various credible references (from IEEE, EEI, EPRI, various manufacturers, etc.), can easily handle multiple deep discharges over its expected life. 5. The Tables have been rearranged and considerably revised to improve clarity. Please see new Table 1-56. The Tables have been rearranged and considerably revised to improve clarity. Please see new Table 1-5. Nothing in the draft Standard (including Attachment A) precludes an entity from using performance-based maintenance for dc control circuits.
Segment:	3
Organization:	Great River Energy
Member:	Sam Kokkinen
Comment:	1. In Table 1a section-Station DC Supply – 18 calendar months, under Maintenance Activities column, suggest changing under Verify: Battery terminal connection resistance To: Entire battery bank terminal connection resistance (This could have been interpreted as individual batteries) And change: Battery cell-to-cell connection resistance To: Battery cell-to-cell connection resistance, where an external mechanical connection is available. 2. In Table 1a-Station dc supply (that has a component Valve Regulated Lead-Acid batteries) suggest changing Max Maintenance Interval=3 Calendar Years or 3 Calendar Months to 4 Calendar Years or 12 Calendar Months. Our concern is that the insurance companies may push NERC maintenance intervals on all

	battery banks not associated with the BES. 3. Table 1a-Station dc supply (that has as a component Lead-Acid batteries) Max Maintenance Interval=6 Calendar Years suggest changing to 10 Calendar Years. Reason: performance tests may degrade the battery. 4. Table 1a-Station dc supply (that has as a component Nickel-Cadmium batteries) Max Maintenance Interval=6 Calendar Years suggest changing to 10 Calendar Years. Reason: performance tests may degrade the battery. 5. Table 1b -Level 2 Monitoring Attributes for Component in the row labeled (Control and trip circuitry) we suggest the following change: If a trip circuit comprises multiple paths, at least one of those paths is monitored. Alarming for loss of continuity or dc supply for trip circuits is reported to a location where action can be taken.
Response:	Thank you for your comment. 1. The Tables have been rearranged and considerably revised to improve clarity. Please see new Table 1-4. This element of the table has been modified to state, "Battery internal cell-to-cell or unit-to-unit connection resistance (where available to measure)" to address this comment. 2. NERC Standards are limited to facilities and equipment related to the BES. How the Standard may be otherwise used is outside the scope of NERC Standards. 3. The SDT disagrees, and believes that a performance test at 6-year intervals is appropiate for Vented Lead Acid and Ni-Cad batteries. A properly maintained battery, according to various credible references (from IEEE, EEI, EPRI, various manufacturers, etc.), can easily handle multiple deep discharges over its expected life. 4. The SDT disagrees, and believes that a performance test at 6-year intervals is appropiate for Ni-Cad batteries. A properly maintained battery, according to various credible references (from IEEE, EEI, EPRI, various manufacturers, etc.), can easily handle multiple deep discharges over its expected life. 5. The Tables have been rearranged and considerably revised to improve clarity. Please see new Table 1-5.
Segment:	5
Organization:	Great River Energy

Member:	Cynthia E Sulzer
Comment:	1. In Table 1a section-Station DC Supply – 18 calendar months, under Maintenance Activities column, suggest changing under Verify: Battery terminal connection resistance To: Entire battery bank terminal connection resistance (This could have been interpreted as individual batteries) And change: Battery cell-to-cell connection resistance To: Battery cell-to-cell connection resistance, where an external mechanical connection is available. 2. In Table 1a-Station dc supply (that has a component Valve Regulated Lead-Acid batteries) suggest changing Max Maintenance Interval=3 Calendar Years or 3 Calendar Months to 4 Calendar Years or 12 Calendar Months. Our concern is that the insurance companies may push NERC maintenance intervals on all battery banks not associated with the BES. 3. Table 1a-Station dc supply (that has as a component Lead-Acid batteries) Max Maintenance Interval=6 Calendar Years suggest changing to 10 Calendar Years. Reason: performance tests may degrade the battery. 4. Table 1a-Station dc supply (that has as a component Nickel-Cadmium batteries) Max Maintenance Interval=6 Calendar Years suggest changing to 10 Calendar Years. Reason: performance tests may degrade the battery. 5. Table 1b -Level 2 Monitoring Attributes for Component in the row labeled (Control and trip circuitry) we suggest the following change: If a trip circuit comprises multiple paths, at least one of those paths is monitored. Alarming for loss of continuity or dc supply for trip circuits is reported to a location where action can be taken. 6. While all tripping circuits are not completely monitored, the trip coils and the outdoor cable runs are completely monitored. The only portion that would not be monitored is a portion of inter and intra-panel wiring having no moving parts located in a control house. Our company has extremely low failure rate of panel wiring and terminal lugging. I don't think that there is provision for moving control and trip circuitry to performance based maintenance? This control circuitry should be maintained less frequent than un-monitored trip circuits (6 years).
Response:	Thank you for your comment. 1. The Tables have been rearranged and considerably revised to improve clarity. Please see new Table 1-

	4. This element of the table has been modified to state, “Battery internal cell-to-cell or unit-to-unit connection resistance (where available to measure)” to address this comment. 2. NERC Standards are limited to facilities and equipment related to the BES. How the Standard may be otherwise used is outside the scope of NERC Standards. 3. The SDT disagrees, and believes that a performance test at 6-year intervals is appropiate for Vented Lead Acid and Ni-Cad batteries. A properly maintained battery, according to various credible references (from IEEE, EEI, EPRI, various manufacturers, etc.), can easily handle multiple deep discharges over its expected life. 4. The SDT disagrees, and believes that a performance test at 6-year intervals is appropiate for Ni-Cad batteries. A properly maintained battery, according to various credible references (from IEEE, EEI, EPRI, various manufacturers, etc.), can easily handle multiple deep discharges over its expected life. 5. The Tables have been rearranged and considerably revised to improve clarity. Please see new Table 1-5. 6. The Tables have been rearranged and considerably revised to improve clarity. Please see new Table 1-5. Nothing in the draft Standard (including Attachment A) precludes an entity from using performance-based maintenance for dc control circuits.
Segment:	1, 3, 5, 6
Organization:	Dominion Virginia Power, Dominion Resources Services, Dominion Resources, Dominion Resources Inc.
Member:	John K Loftis, Michael F Gildea, Mike Garton, Louis S Slade
Comment:	1. There is not enough clarity to clearly identify which protection system components are necessary to protect the BES. We suggest that 4.2.1 be revised to read “protection systems that are designed to provide protection for the BES.” 2. The Standard does not provide a grace period if an entity is unable to meet the maintenance requirement for extenuating circumstances. For example if an entity has to divert maintenance resources to storm restoration. We do not believe the reliability of the Bulk Electric System will be compromised if an entities' maintenance program slips by a few months due to extreme events, especially if it is brought back on track within a short time frame. 3. We are opposed to the six calendar year maximum maintenance interval for microprocessor relays that have auxiliaries.

Response:	Thank you for your comment. 1. The SDT disagrees and believes that the Applicability is correct as stated. 2. "Grace periods" within the Standard are not measurable, and would probably lead to persistently increasing intervals. However, an entity may establish an internal program with grace-period allowance, as long as the entire program (including grace periods) does not exceed the intervals within the Standard. 3. The Tables have been rearranged and considerably revised to improve clarity. Please see new Table 1-1.
Segment:	3
Organization:	Allegheny Power
Member:	Bob Reeping
Comment:	The draft standard expects 100% compliance for millions of protection system components at all times. The standard should consider a statistically based performance metric instead of a performance target that expects 100% compliance.
Response:	Thank you for your comment. The NERC criteria for VSLs do not currently permit them to allow some level of non-performance without being in violation.
Segment:	1
Organization:	Public Service Company of New Mexico
Member:	Laurie Williams
Comment:	Overall, the inclusion of several types of protective relay systems into one standard is reasonable and should include those associated with UVLS and UFLS. Even so, the standard is unmanageably cumbersome with far too many details. Although it has been said that protection systems include the instrument transformers, DC system and sometimes the breaker trip coils it is equally as true to say that the protective relay systems depend on those to effectively respond to the anomaly, typically a short circuit fault. With that said it is those item's maintenance that should potentially be moved to different standards to improve clarity. Their inclusion into this standard by size and complexity overwhelms this standard. This standard should include only those items that utilize similar equipment and techniques to maintain. In this case and at this time that means computer-controlled test sets that also generate the records necessary to prove compliance. Even after distilling the standard to only protective relay systems the complexities and details used to explain

	the non-time-based methodologies contribute to the confusion. But the availability of those methodologies is important and probably cannot be in a different standard. It therefore seems imperative with the inclusion of those methodologies that the DC support system maintenance and instrument transformer maintenance have different standards. The inclusion of so much explanation inside the standard is distracting and perhaps contributes to the confusion. PNM also offers the following specific feedback on the proposed standard: 1. -R1.1: Uniquely identifying 'Protection System components' as asked for in R1.1 may be problematic given protective systems may be logged in maintenance databases as packages rather than individual elements. Because the elements within each package are tested as a group, the requirement to individually list the components of the package and track them as such would provide no additional benefit to system reliability. 2. -The activities outlined in Tables which begin on Page 9 of the proposed Standard are difficult to align with the VSLs given in the standard. 3. -The Tables suggest that test trips of equipment are required as part of the scheduled program, but test trips of equipment may pose a hazard to the BES if the equipment fails due to multiple test trips or mis-operates to remove additional BES facilities from service (ex., breaker failure mis-operation during line relay trip testing), which may pose a potential risk to the BES. An example would be 8 test trips of a generator breaker in order to make it through the testing of all of the system components that have the ability to trip the generator lockout and therefore the breaker. Suggest wording to be added that would include some sort of breaker tripping simulation (test box, lockout simulator, etc.) that could be built into the circuit? 4. -It is still unclear how the audit of an entity's compliance which occurs during the transition time will be viewed if it chooses to immediately transition all of its components to the intervals defined in the standard, but were out of the interval defined by the entity under PRC-005-1? 5. -From the Table 1a – "Verify proper function of the current and voltage signals" is not defined. Is the verification visual? How is this easily measured on circuits with EM relays still in service? 6. -If exposure to BES is evident during a testing interval, how does the TO or GO coordinate with its

	Reliability Coordinator to delay or push out testing that may compromise the testing due date? Example – critical transmission circuit is removed from service under forced outage, testing due on adjacent or other critical circuit where test tripping could compromise BES. What is the documentation procedure to get an exception or coordinate with RC to mitigate? This has been a big hole in any testing program; there is no way to file an exception due to unforeseen circumstances like this one. 7. -Is it recommended that there be on PSMP per Company no matter how many Entities they may have or should there be one PSMP for each entity? Standard is unclear on this issue.
Response:	Thank you for your comment. 1. Requirement R1, part 1.1, has been revised to state, "Address all Protection System component types" in consideration of your comment. 2. The Tables have been rearranged and considerably revised to improve clarity. Please see new Table 1-5. The VSLs have been modified to correspond. 3. The Standard allows functional testing, if used, to be done in overlapping segments to avoid specifically the situations you cite. 4. This is a concern that should be submitted to the compliance monitor. 5. The Tables have been rearranged and considerably revised to improve clarity. Please see new Table 1-3. Also please see Section 15.2 of the Supplementary Reference and FAQ II.3.A, II.3.B, II.3.C, and II.3.D. 6. It would seem prudent to schedule your maintenance to allow for such contingencies. "Grace periods" within the Standard are not measurable, and would probably lead to persistently increasing intervals. However, an entity may establish an internal program with grace-period allowance, as long as the entire program (including grace periods) does not exceed the intervals within the Standard. 7. This is up to the entity. For example, you may choose to have one PSMP for a transmission function and a separate one for a generation function.
Segment:	1
Organization:	PPL Electric Utilities Corp.
Member:	Brenda L Truhe
Comment:	PPL EU is voting negative because the definition of Protective Relays is not limited to only those devices that use electrical quantities as inputs (exclude pressure, temperature, gas, etc).
Response:	Thank you for your comment. The Standard does not preclude entities from maintaining such devices or

	including them in their PSMP.
Segment:	1, 3
Organization:	Platte River Power Authority
Member:	John C. Collins, Terry L Baker
Comment:	The standard is very difficult to interpret even with all of the supplemental documentation and we believe this will lead to more non-compliance of the standard without any increase to system reliability and in some cases the required testing will actually reduce system reliability by putting the system at unnecessary risk to complete the testing.
Response:	Thank you for your comment. The Tables have been rearranged and considerably revised to improve clarity. Please see new Table 1-5.
Segment:	1
Organization:	Nebraska Public Power District
Member:	Richard L. Koch
Comment:	The negative vote is based upon functional trip checking and the affect that it will have on the BES.
Response:	Thank you for your comment. The Tables have been rearranged and considerably revised to improve clarity. Please see new Table 1-5, which no longer includes any specific requirements for functional testing. Performance-based maintenance can also be applied to these functions.
Segment:	1
Organization:	National Grid
Member:	Saurabh Saksena
Comment:	1. National Grid does not agree with the proposed implementation plan. The time provided for the first phase “at least six months” is too open ended and does not give entities a clear timeline. National Grid suggests 1 year for the first phase. National Grid also suggests phasing out the second phase in stages. 2. National Grid does not support the VSL criteria based on "total number of components". Calculating total number of components will be hugely costly and does not enhance any reliability. It will also take away the much needed resources required for maintenance.
Response:	Thank you for your comment.

	1. This comment appears to be related to the Implementation Plan for the definition (which was independent to the Standard), not to the Standard. 2. The SDT believes that the only alternative to these criteria is to provide a binary VSL, which would mean that any non-compliance would be "Severe".
Segment:	3
Organization:	Niagara Mohawk (National Grid Company)
Member:	Michael Schiavone
Comment:	National Grid does not agree with the proposed implementation plan. The time provided for the first phase "at least six months" is too open ended and does not give entities a clear timeline. National Grid suggests 1 year for the first phase. National Grid also suggests phasing out the second phase in stages.
Response:	Thank you for your comment. This comment appears to be related to the Implementation Plan for the definition (which was independent to the Standard), not to the Standard.
Segment:	1, 3
Organization:	MidAmerican Energy Co.
Member:	Terry Harbour, Thomas C. Mielnik
Comment:	For control and trip circuit maintenance the requirement includes "a complete functional trip test". In order to accomplish this type of testing given current design of lock-out relay and interrupting device trip circuitry multiple breakers and line terminal outages would be required simultaneously. In addition this type of testing has the potential to result in unintentional tripping of equipment that could cause equipment damage and customer outages. Segmentation of trip circuits by lifting wires has the potential for incorrect restoration following testing. This type of testing has the potential to degrade system reliability as multiple entities schedule this work. An alternate to complete functional testing that does not potentially degrade system reliability should be substituted.
Response:	Thank you for your comment. The Tables have been rearranged and considerably revised to improve clarity. Please see new Table 1-5, which no longer includes any specific requirements for functional testing. Performance-based maintenance can also be applied to these functions. Electromechanical devices such as aux or lockout relays remains at 6 years, as these devices contain "moving parts" which must be periodically exercised to remain reliable.

Segment:	1
Organization:	Idaho Power Company
Member:	Ronald D. Schellberg
Comment:	Monitoring the state of charge using current measurement methods would increase the workload and staffing requirements beyond what we feel is necessary with little additional value to reliability beyond specific gravity measurements.
Response:	Thank you for your comment. The Standard is requiring that state-of-charge be determined, but does not specify how. Specific gravity testing (no longer required within the Tables) would be one method.
Segment:	1
Organization:	Commonwealth Edison Co.
Member:	Daniel Brotzman
Comment:	1. Nuclear generators are licensed to operate and regulated by the Nuclear Regulatory Commission (NRC). Each licensee operates in accordance with plant specific Technical Specifications (TS) issued by the NRC which are part of the stations' Operating License. TS allow for a 25% grace period that may be applied to TS Surveillance Requirements. Referencing NRC issued NUREGs for Standard Issued Technical Specifications (NUREG-143 through NUREG-1434) Section 3.0, "Surveillance Requirement (SR) Applicability," SR 3.02 states the following: "The specified Frequency for each SR is met if the Surveillance is performed within 1.25 times the interval specified in the Frequency, as measured from the previous performance or as measured from the time a specified condition of the Frequency is met." The NRC Maintenance Rule (10 CFR 50.65) requires monitoring the effectiveness of maintenance to ensure reliable operation of equipment within the scope of the Rule. Adjustments are made to the PM (preventative maintenance) program based on equipment performance. The Maintenance Rule program should provide an acceptable level of reliability and availability for equipment within its scope. The NRC has provided grace periods for certain maintenance and surveillance activities. Exelon strongly believes that SDT should consider providing this grace period to be in agreement and be consistent with the NRC methodology. Not providing this grace period will directly affect the existing nuclear station practices (i.e., how stations schedule and perform the maintenance activities) and may lead to confusion as implementing dual requirements is not the normal station process. Nuclear generating stations have refueling outage schedule windows of approximately 18 months or 24 months (based on reactor type). If for some reason the schedule

	window shifts by even a few days, an issue of potential non-compliance could occur for scheduled outage-required tasks. The possibility exists that a nuclear generator may be faced with a potential forced maintenance outage in order to maintain compliance with the proposed standard. For the requirements with a maximum allowable interval that vary from months to years (including 18 Months surveillance activities), the SDT should consider an allowance for NRC-licensed generating units to default to existing Operating License Technical Specification Surveillance Requirements if there is a maintenance interval that would force shutting down a unit prematurely or face non-compliance with a PRC-005 required interval. Therefore, at a minimum, maintenance intervals should include an allowance for any equipment specifically controlled within each licensee's plant specific Technical Specifications to implement existing Operating License requirements if such a conflict were to occur. 2. Additionally we are requesting to have the first phase of implementation extended from 6 months to 1 year. This will provide adequate time for development of documentation, training for all personnel, and testing the implementation of the new process (es).
Response:	Thank you for your comments. 1. The SDT understands that nuclear power plants are licensed and regulated by the NRC, has a general understanding of the role that plant Technical Specifications (TS) and associated Surveillance Requirements (SR) play in the facilities' operating licenses, and has tried to be sensitive to potential conflicts between PRC-005-2 and NRC requirements. The SDT believes that the majority of components making up the Protection Systems for in-scope generating facilities as discussed in Section 4.2.5 of the Standard would be considered balance of plant equipment and, therefore, not subject to NRC issued TS and associated SR requirements. While availability of plant auxiliary sources to the plant's safety related equipment is addressed by TS and associated SR requirements, these documents are focused on the effects that the availability of these transformers have on reactor safety rather than specifying maintenance and testing requirements for the Protection Systems for these transformers. The SDT recognizes that some battery systems may serve as a source of DC power to both reactor

	safety systems and to protection systems discussed in Section 4.2.5. The SDT acknowledges that there might be plant TS and SR applicable to these batteries. However, the SDT believes that the 3-month and 18-month inspection requirements called for in PRC-005-2 would be no more onerous than plant TS requirements for routine online safety system battery inspections and, furthermore, would not necessitate a plant outage. The SDT recognizes that the PRC-005-2 requirement for validating battery design capability via battery capacity testing would require a plant outage. However, it is the opinion of the SDT that the maximum allowed battery capacity testing intervals of not to exceed 6 calendar years for vented lead acid or NiCad batteries (not to exceed 3 calendar years for VRLA batteries) could easily be integrated within the plant's routine 18 month to 2 year interval refueling outage schedule. The SDT believes that PRC-005-2 is complimentary to the NRC Maintenance Rule in that PRC-005-2 requirements allow for the leveraging of the entire electrical power industry experience in establishing minimum maintenance activities and maximum allowed maintenance intervals necessary to ensure reliable protection system performance. Please see Supplemental Reference Section 8.4 for further discussion for the SDT's rationale for exclusion of grace periods. Please see FAQ IV.2.C for further discussion of impact of PRC-005-2 testing requirements on power plant outage schedules. The challenge of integrating PRC-005-2 testing requirements with a plant's outage schedule is not unique to nuclear plants. Finally, the SDT notes that an entity may build grace periods into its own PSMP as long as the maximum allowed time intervals of PRC-005-2 are not exceeded. If an entity wishes to build a 25% grace period into its program, it may do so by setting its program maintenance and testing intervals at <80% of the PRC-005-2 maximum allowable time interval. 2. The Implementation Plan for R1 has been modified to 12 months.
Segment:	1, 3, 6
Organization:	Cleco Power LLC, Cleco Utility Group, Cleco Power LLC
Member:	Danny McDaniel, Bryan Y Harper, Matthew D Cripps

Comment:	1. The revised definition to Protection System should include the following exception. "Devices that sense non electrical conditions, such as thermal or transformer sudden pressure relays are not included." The Drafting Team has included this note in the standard, but not in the definition. For consistence across the standards, see PRC-004, which references System Protection, the same definition should be used. 2. See Table 1a, Station dc supply. One of the checks is to verify battery cell-to-cell connection resistance. This is not possible in all battery sets. 3. As written, the standard requires testing of batteries, DC control circuits, etc., of distribution level protection components associated with UFLS and UVLS. This is beyond the scope of the Reliability Standards which should focus on the BES. Only include the UFLS or UVLS relays in the program. 4. Revise M1 to reference Protection System definition.
Response:	Thank you for your comment. 1. The definition of “Protection System” has been modified essentially as you suggest. 2. “Cell” has been replaced with “cell/unit.” 3. The Tables have been rearranged and considerably revised to improve clarity. Please see new Tables 1-4 and 1-5.
Segment:	1
Organization:	BC Transmission Corporation
Member:	Gordon Rawlings
Comment:	1. - Purpose unclear “affecting the reliability of the BES” is open to interpretation should read “applied on or designed to provide protection of the BES” 2. - Monitoring levels (1, 2 and 3) are not clear 3. - Maintenance activities are not well defined 4. - Some utilities base their maintenance program on a fiscal year where all scheduled maintenance for the fiscal year must be completed by the end of the fiscal year. It would take considerable effort to switch to end of calendar year with zero improvement in overall reliability.

	5. - For maintenance scheduled in terms of a number of months, requiring that maintenance be completed by the end of scheduled month does not leave much margin if maintenance is delayed for a legitimate reason.
Response:	Thank you for your comment. 1. The purpose can be general; Requirement R1 is worded as you suggest. 2. The Tables have been rearranged and considerably revised to improve clarity. Please see new Tables 1-1 through 1-5. 3. The Tables have been rearranged and considerably revised to improve clarity. Please see new Tables 1-1 through 1-5. Various sections of the FAQ have provided suggestions about how to conduct the activities in the tables. 4. With the vast array of entities subject to compliance monitoring, it would be very difficult for the ERO to assess compliance for varying "years." Additionally, the SDT understands that most compliance monitors currently request data on a calendar year basis when assessing compliance. 5. The entity is encouraged to schedule the maintenance activities to allow for contingencies.
Segment:	1
Organization:	Associated Electric Cooperative, Inc.
Member:	John Bussman
Comment:	There needs to be grace periods for the battery testing of 3 months. Testing a complete transmission system over 3 states in every 3 months and not be one day past due will b a challenge.
Response:	Thank you for your comment. The 3-month maintenance for station dc supply is comprised of inspections that don't require testing.
Segment:	1, 3, 5
Organization:	Arizona Public Service Co., APS
Member:	Robert D Smith, Thomas R. Glock, Mel Jensen
Comment:	1. The generator Facilities subsections 4.2.5.1 through 5 are too prescriptive and inconsistent with sections 4.2.1 through 4. Recommend this section be limited to description of the function as in the preceding sections. 2. In addition, the associated maintenance activities in Table 1 are too prescriptive.

	3. The activities needed to ensure the reliable service of the relay or device should be left up to the discretion of the utility. One example, due to the change to the Protection System definition and establishing a new PSMP with prescriptive maintenance activities relative to the voltage and current sensing devices has created a situation where data from original or prior verification is not available or not at the interval to meet the data retention requirement. Although, methods of determining the integrity of the voltage and current inputs into the relays were used to ensure reliability of the devices met the utilities performance requirements, they may not meet the interval requirement and would then be considered a violation due to changes in the standard. 4. For data requirements, an initial exemption is recommended for the two recent most recent performances of maintenance activities in the first maintenance interval for this component due to the long maintenance interval, the changes in the standard definitions and the prescriptive maintenance activities. 5. Clarification is needed on "Note 1" in Table 1a, which appears to be used to define a calibration failure. How would it be used in Time Based Maintenance? In PRC-005-2 Attachment A: Criteria for a Performance-Based Protection System Maintenance Program, a calibration failure would be considered an event to be used in determining the effectiveness of Performance Based Maintenance. It is unclear in how it will be used in time based maintenance.
Response:	Thank you for your comment. 1. The SDT believes that transmission lines, UFLS, UVLS, and SPS are clear without additional granularity, but that the additional granularity regarding generation plants is necessary. This is illustrated by numerous questions regarding "what is included for generation facilities" relative to PRC-005-1. 2. FERC Order 693 and the approved SAR assigned the SDT to develop a Standard with maximum allowable intervals and minimum maintenance activities. 3. FERC Order 693 and the approved SAR assigned the SDT to develop a Standard with maximum allowable intervals and minimum maintenance activities. It seems reasonable that you cannot be held accountable for a requirement before it becomes effective. 4. In order that a Compliance Monitor can be assured of compliance, the SDT believes that the Compliance Monitor will need the data of the most recent performance of the maintenance, as well as the data of the preceding one, as well as data to validate that entities have been in compliance since the last audit (or currently, since the beginning of mandatory compliance). The SDT has specified the data retention in the posted Standard to establish this level of documentation. The Tables have been rearranged and considerably revised to improve clarity, and the cited note removed. Please see new

	Tables 1-5.
Segment:	1
Organization:	American Transmission Company, LLC
Member:	Jason Shaver
Comment:	ATC does not support the existing 2nd Draft of PRC-005-2 Standard because it is our opinion that: • There is a high probability that system reliability will be reduced with this revised standard. • The number of unplanned outages due to human error will increase considerably. • Availability of the BES will be reduced due to an increased need to schedule planned outages for test purposes (to avoid unplanned outages due to human error). • To implement this standard, an entity will need to hire additional skilled resources that are not readily available. (May require adjustments to the implementation timeline.) • The cost of implementing the revised standard will approximately double our existing cost to perform this work. ATC requests that relevant reliability performance data (based on actual data and/or lessons learned from past operating incidents, Criteria for Approving Reliability Standards per FERC Order 672) be provided to justify the additional cost and reliability risks associated with functional testing.
Response:	Thank you for your comment. The SDT believes that performing these maintenance activities will benefit the reliability of the BES.
Segment:	1, 5, 6
Organization:	American Electric Power, AEP Service Corp, AEP Marketing
Member:	Paul B. Johnson, Brock Ondayko, Edward P. Cox
Comment:	AEP supports the progress of this draft standard, largely supports much of the elements within. However, we provide the following summary of the comments provided in response to the most recent (2nd) draft, which we suggest the SDT consider. 1. In Table 1a for the component “Station dc Supply (used only for UVLS and UFLS)”, the interval

	prescribed is "(when the associated UVLS or UFLS system is maintained)" and the activity is to "verify the proper voltage of the dc supply". The description of the interval "(when the associated UVLS or UFLS system is maintained)" needs to be changed. Relay personnel do not generally take battery readings. The interval should read “according to the maximum maintenance interval in table 1a for the various types of UFLS or UVLS relays". The testing does not need to be in conjunction with the relay testing, it is only the test interval that is important, although relay operation during relay testing is a good indicator of sufficient voltage of the battery. 2. The monitoring and/or maintenance activities listed for batteries are not appropriate in Tables 1b and 1c. There are no commercial battery monitors that monitor and alarm for electrolyte level of all cells. Why not move the electrolyte level to the 18 month inspection and actually open the possibility of condition monitoring to commercially available devices? Or give an option to do the electrolyte check at other time intervals (perhaps 12 months) by visual electrolyte inspection and still allow the monitoring of other functions on the listed 6 year schedule using condition monitoring. It makes no sense to prescribe an unattainable condition monitoring solution. The way that the tables are written, there is no advantage to use the charger alarms since battery maintenance requirements are not reduced in any way. 3. In regards to "Measures and Data Retention", the measure includes the entire definition of "Protection System". Remove the definition from the measure and let the definition stand alone in the NERC glossary. 4. In regards to Data Retention, this calls for past 2 distinct maintenance records to be kept. Since UFLS interval can be 12 years, this would mean that we would need to keep records for 24 years. This is not realistic and consideration should be given to choosing a reasonable retention threshold. 5. The "Supplementary Reference" and the "Frequently-Asked Questions" document should be combined into a single document. This document needs to be issued as a controlled NERC approved document. AEP suggests that the document be appended to the standard so it is clear that following directions provided by NERC via the document are acceptable, and to avoid an entity being penalized during an audit if the auditor disagrees with the document’s contents. 6. NiCAD batteries should not be treated differently from Lead-Acid batteries. NiCAD battery condition can be detected by trending cell voltage values. Ohmic testing will also trend battery conditions and locate failed cells (although will usually lag behind cell voltages). A required load test is detrimental to the NiCAD

	manufacturer's business, and will definitely hurt the NiCAD business for T&D applications. Historically NiCADs may have been put into service because of greater reliability, smaller space constraints, and wider temperature operation range. “Individual cell state of charge” is a bad term because it implies specific gravity testing. Specific gravity cannot be measured automatically (without voiding battery warranty or using an experimental system), and when it is measured, it is unreliable due to stratification of the electrolyte and differing depths of electrolyte taken for samples. “Battery state of charge” can be verified by measuring float current. Once the charging cycle is over the battery current drops dramatically, and the battery is on float, signaling that the battery has returned to full state of charge. This is an appropriate measure for Level 3 monitoring as float current monitoring is a commercially viable option and electrolyte level monitoring is not. 7. In Table 2b, why is Ohmic testing required if the battery terminal resistance is monitored? Cell to cell and battery terminal resistance should not be monitored because they will be taken in 18 month intervals. This further supports the argument that the battery charger alarms would be sufficient for level 2 monitoring, while keeping an 18 month requirement for Ohmic testing, electrolyte level verification, and battery continuity (state of charge). Automatic monitoring of the float current should be sufficient for level 3 monitoring as it gives state of charge of the string, and battery continuity (detect open cells). Shorted cells will still be found during the Ohmic testing and a greater interval is sufficient to locate these problems.
Response:	Thank you for your comment. 1. The Tables have been rearranged and considerably revised to improve clarity. Please see new Table 1-5. 2. The Tables have been rearranged and considerably revised to improve clarity. Please see new Table 1-5. 3. The SDT modified the Measure as you suggested. 4. In order that a Compliance Monitor can be assured of compliance, the SDT believes that the Compliance Monitor will need the data of the most recent performance of the maintenance, as well as the data of the preceding one, as well as data to validate that entities have been in compliance since the last audit (or currently, since the beginning of mandatory compliance). The SDT has specified the data retention in the posted Standard to establish this level of documentation. The SDT disagrees that the documents should be combined. The Supplementary Reference is a holistic presentation of rationale and basis for the various elements of the Standard – discussing mostly the “what” behind the requirements. The FAQ, on the other hand, presents responses to specific frequently asked questions, and, as such, offers more-focused advice on specific subjects, and is more of an example/how-to discussion. The FAQ is primarily a means of capturing some of the most prevalent comments offered

	on the Standard by various entities, with the SDT's response. The SDT believes that the format of the FAQ is a more effective means of presenting the included information than it would be to include this information within the text of the Supplementary Reference document. 5. The SDT believes that since the IEEE Stationary Battery Committee has determined that VRLA batteries and Ni-Cad batteries are different enough to require separate IEEE Standards (IEEE 1188 and IEEE 1106, respectively), these battery technologies are different enough to be treated separately within PRC-005-2. The SDT has drawn upon these IEEE Standards, as well as other sources (EPRI, etc) to develop the requirements of PRC-005-2. The trending activity cited has not been shown to be effective for Ni-Cad batteries (see FAQ II.5.G), and thus a performance test must be performed; the performance test may take many forms. The Tables have been rearranged and considerably revised to improve clarity, and all references to specific gravity have been removed. Please see new Table 1-4. Determining the "state of charge" by monitoring the float voltage may be relevant to the overall station battery, but does not provide an indication of the condition of individual cells as required within the new Table 1-4. 6. Battery terminal resistance shows the condition of the external connections, but reveals nothing regarding the internal condition of the individual cells. Measuring the internal cell/unit resistance provides an opportunity to trend the cell condition over time by verifying the electrical path through the electrolyte within the battery. The ohmic testing is not intended to look for open cells/units, but instead at the ability of the individual cell/unit to perform properly. The new Table 1-4 clarifies that, if the electrolyte level is monitored, the internal ohmic testing need only be performed every six years. Please see FAQ II.5.B, II.5,C and II.5.D for a discussion about continuity.
Segment:	1
Organization:	Ameren Services
Member:	Kirit S. Shah
Comment:	We commend the SDT for developing a generally clear and well documented second draft. The SDT considered and adopted many industry comments on the first draft. It generally provides a well reasoned and balanced view of Protection System Maintenance, and good justification for its maximum intervals. Ameren generally agrees that this second draft will be beneficial to BES reliability, but several inconsistencies, unclear items, and a couple issues need to be addressed before we will be able to support it. (a)The tables still contain several inconsistencies and items needing clarification

	(b)Implementation of the PSMP must align with the start of a calendar year (c) The expectation of perfection in maintaining the extremely high volume of Protection System parts is inconsistent with accepted engineering practice (a fundamental tenet is that tolerances must be allowed for) (d)The Project 2009-17 interpretation that clarifies the transmission Protection System border must be incorporated. (e)Generating Plant system-connected Station Service transformers should not be included as a Facility because they are serving load.
Response:	Thank you for your comment. a. The Tables have been rearranged and considerably revised to improve clarity. Please see new Table 1-5. b. The SDT Guidelines, which were endorsed by the NERC Standards Committee in April 2009, establishes that proposed effective dates "must be the first day of the first calendar quarter after entities are expected to be compliant." The Implementation Plan is in accordance with these guidelines. c. The NERC criteria for VSLs do not currently permit them to allow some level of non-performance without being in violation. d. When the interpretation (Project 2009-17) is approved, the SDT for PRC-005-2 will consider if the interpretation is appropriate for PRC-005-2 and make associated changes. e. The "load" being served by the Station Service Transformer may be essential to operation of the generating plant, and therefore is not the same as general distribution system load. Therefore, the SDT believes that these system components must remain within the Applicability section of the Standard.
Segment:	3
Organization:	Florida Power Corporation
Member:	Lee Schuster
Comment:	Progress Energy does not believe that the definition should be implemented separately from and prior to the implementation of PRC-005-2. We believe there should be a direct linkage between the definition's effective date to the approval and implementation schedule of PRC-005-2. Since this new definition should be directly

	linked to the proposed revised standard, it would be premature to make this new definition effective prior to the effective date of the new standard. We believe that changes to the maintenance program should be driven by the revision of the PRC standard, not by the revision of a definition.
Response:	Thank you for your comment. When the Board of Trustees was asked to approve an interpretation of PRC-005-1 that was written by the PSMT SDT, the board acknowledged the reliability gap identified by the drafting team caused by the definition of "Protection System" and directed that work to close this reliability gap should be given priority. To close this reliability gap the revised definition must be applied to PRC-005-1 as soon as practical - not years from now. The Implementation Plan now proposes at least 12 months for entities to apply the new definition to PRC-005-1, and that should give entities time to apply the new definition to PRC-005-1.
Segment:	1, 3, 5, 6
Organization:	Bonneville Power Administration
Member:	Donald S. Watkins, Rebecca Berdahl, Francis J. Halpin, Brenda S. Anderson
Comment:	Please see BPA's comments submitted during the concurrent formal NERC comment period ending July 16, 2010.
Response:	Thank you for your comment. Please see our responses on the Consideration of Comments from the cited comment period.
Segment:	6
Organization:	Northern Indiana Public Service Co.
Member:	Joseph O'Brien
Comment:	1. It appears that some batteries are not able to accommodate all of the tests required in this standard. 2. The standard also unreasonably requires 100% compliance for millions of protection system components.
Response:	Thank you for your comment. 1. The Tables have been rearranged and considerably revised to improve clarity. Please see new Table 1-4. 2. The NERC criteria for VSLs do not currently permit them to allow some level of non-performance without being in violation.

Segment:	6
Organization:	Lakeland Electric
Member:	Paul Shipps
Comment:	As written, is opens the standard to Technical Feasibility Exceptions due to some batteries not being able to accommodate all of the tests proscribed in the draft standard
Response:	Thank you for your comment. The Tables have been rearranged and considerably revised to improve clarity. Please see new Table 1-4. "Cell" has been replaced with "cell/unit" to address this concern. The Standard only addresses distribution-located devices to the degree that they address BES issues. UFLS and UVLS per the relevant NERC Standards are frequently implemented on the distribution system.
Segment:	4
Organization:	Fort Pierce Utilities Authority
Member:	Thomas W. Richards
Comment:	1. The battery test procedure that calls for intra-cell resistance cannot be performed on batteries that have internal cell-to-cell straps. A brief rewording of the requirement would take care of this. We recommend the minimum requirement be changed to measure the internal resistance at the battery terminal. The reading of individual cells is of little use anyway since a bad reading will result in having to replace the entire jar. 2. The draft standard would cause NERC to regulate through the standards battery testing, DC circuit testing, etc. on distribution elements with no significant improvement to BES reliability, which is beyond the statutory scope of the standards. 3. The standard unreasonably retains the "100% compliance" paradigm for thousands, if not millions of protection system components. The audit becomes an investigation at this point and is not feasible even for mid-sized entities that have hundreds of components subject to this standard.
Response:	Thank you for your comment. 1. The Tables have been rearranged and considerably revised to improve clarity. Please see new Table 1-4. "Cell" has been replaced with "cell/unit" to address this concern. 2. The Standard only addresses distribution-located devices to the degree that they address BES issues. UFLS and UVLS per the relevant NERC Standards are frequently implemented on the distribution system.

	3. The NERC criteria for VSLs do not currently permit them to allow some level of non-performance without being in violation.
Segment:	5
Organization:	PowerSouth Energy Cooperative
Member:	Tim Hattaway
Comment:	The maintenance and testing requirements are too prescriptive and leave little room for an entity to make decisions regarding what type maintenance and testing they deem appropriate. Some of the maintenance and testing methods and intervals as defined in the standard, e.g. the standard calls for a maximum 3 month testing interval for sealed station batteries if performing impedance testing, do not seem to improve reliability at all. The migration from compliance with the present standard to version 2 as prescribed would be a monumental administrative task
Response:	Thank you for your comment. FERC Order 693 and the approved SAR assigned the SDT to develop a Standard with maximum allowable intervals and minimum maintenance activities.
Segment:	5
Organization:	Liberty Electric Power LLC
Member:	Daniel Duff
Comment:	Required tasks are overly prescriptive.
Response:	Thank you for your comment. FERC Order 693 and the approved SAR assigned the SDT to develop a Standard with maximum allowable intervals and minimum maintenance activities.
Segment:	5
Organization:	ExxonMobil Research and Engineering
Member:	Martin Kaufman
Comment:	In the past, NERC has taken care to avoid instructing an entity on how to create its compliance program. The draft standard PRC-005-2 departs from this tradition and partially defines a maintenance and testing program that all entities will be required to follow until such a time that the entity has collected enough data to

	implement the performance based method defined in Attachment A. Additionally, some of the maintenance and testing intervals defined in the tables (e.g. station battery testing) mimic industry recommended test intervals instead of defining maximum acceptable testing intervals.
Response:	Thank you for your comment. FERC Order 693 and the approved SAR assigned the SDT to develop a Standard with maximum allowable intervals and minimum maintenance activities.
Segment:	4
Organization:	Y-W Electric Association, Inc.
Member:	James A Ziebarth
Comment:	From Question 1 on the comment form: Many of the changes to the proposed standard are reasonable and improve the clarity of the standard and its requirements. However, Y-WEA concurs with others on their comments regarding the testing of battery cell-to-cell connection resistance. Many types of stationary batteries are actually blocks of two or more cells that are internally connected. This requirement would necessitate either some sort of feasibility exception process (which, as shown by the TFE process with the CIP standards can be very difficult, cumbersome, and time-consuming to develop and administer) or replacement of the batteries in question, which would pose enormous burdens on small entities that must comply with this standard. The language in this requirement should be changed from “cell-to-cell” to “unit-to-unit” in order to avoid these issues. From Question 7 on the comment form: 1. Y-WEA concurs with others regarding the timing of required battery tests. The IEEE standards referenced indicate target maintenance intervals. In order to remain reasonable, then, this compliance standard needs to allow some buffer between a targeted maintenance and inspection interval and a maximum enforceable maintenance and inspection interval. The suggestion of a four-month maximum window is reasonable and should be incorporated into the standard. 2. Y-WEA is also concerned with R1.1’s language indicating that all components must be identified with no defined “floor” for the significance of a component to the Protection System. The SDT cannot possibly expect that a parts list containing every terminal block, wire and jumper, screw, and lug is going to be maintained with every single part having all the compliance data assigned to it, but without clearly stating this, that is exactly the degree of record-keeping that some overzealous auditor could attempt to hold the registered entity to. The FAQ is much clearer as to what is and is not a component and should be considered

	for the standard. 3. Y-WEA also concurs with others' comments regarding the testing of batteries and DC control circuits associated with UFLS relaying. Many UFLS relays are installed on distribution equipment. Furthermore, many distribution equipment vendors are including UFLS functions in their distribution equipment. For example, many recloser controls incorporate a UFLS function in them. These controls and the reclosers they are attached to, however, are strictly distribution equipment. 16 USC 824o (a)(1) limits the definition of the Bulk-Power System to "not include facilities used in the local distribution of electric energy." A distribution recloser and its control clearly fall into this exclusion. 16 USC 824o (i) (1) prohibits the ERO from developing standards that cover more than the Bulk-Power System. As such, the DC control circuitry and batteries associated with many UFLS relaying installations are precluded from regulation under NERC's reliability standards and may not be included in this standard because they are distribution equipment and therefore not part of the Bulk-Power System. The proposed standard needs to be rewritten to allow for this exclusion and to allow for the testing of only the UFLS function of any distribution class controls or relays.
Response:	Thank you for your comment. From Question 1 - The Tables have been rearranged and considerably revised to improve clarity. Please see new Table 1-4. This element of the table has been modified to state, "Battery internal cell-to-cell or unit-to-unit connection resistance (where available to measure)" to address this comment. From Question 7 – 1. The SDT disagrees. You should complete the activities within the intervals specified. 2. Requirement R1, part 1.1, has been revised to state, "Address all Protection System component types" in consideration of your comment. 3. The Tables have been rearranged and considerably revised to improve clarity. Please see new Tables 1-4 and 1-5.
Segment:	4
Organization:	Old Dominion Electric Coop.
Member:	Mark Ringhausen
Comment:	While the SDT has made progress, there are still some areas that need additional work:

	1. Battery testing of the cell to cell should be unit to unit or some other words for battery system locations that do not allow cell to cell testing. 2. Battery checks on a three months period seems to aggressive and should be moved to six months. 3. Clarify your intent to test the CTs and PTs as some commenters have read it that one does not have to test these pieces of equipment per this standard. 4. Require UFLS and UVLS testing to trip the breaker/recloser when this can be done without tripping of load (by-pass is available).
Response:	Thank you for your comment. 1. The Tables have been rearranged and considerably revised to improve clarity. Please see new Table 1-4. This element of the table has been modified to state, "Battery internal cell-to-cell or unit-to-unit connection resistance (where available to measure)" to address this comment. 2. The SDT disagrees. You should complete the activities within the intervals specified. 3. The Tables have been rearranged and considerably revised to improve clarity. Please see new Table 1-3. 4. The Tables have been rearranged and considerably revised to improve clarity. Please see new Table 1-5.
Segment:	3
Organization:	Springfield Utility Board
Member:	Jeff Nelson
Comment:	Please see SUB's comments on the comment form
Response:	Thank you for your comment. Please see the SDT response in the Consideration of Comments.
Segment:	3
Organization:	Salem Electric
Member:	Anthony Schacher
Comment:	The standard is getting better but leaves to many holes for utilities that do not have specific equipment and would need to file a TFE to exempt their facilities.
Response:	Thank you for your comment. The Tables have been rearranged and considerably revised to improve clarity. Please see new Tables 1-1 through 1-5.

Segment:	3
Organization:	Public Utility District No. 2 of Grant County
Member:	Greg Lange
Comment:	Although this version is a significant improvement in several areas from the past version there are still several things that need clarification or overhaul. 1. We find an inconsistency between the component based approach to version 2 and the way protective systems are maintained. The description of components still needs work as well. 2. It appears that in the new version battery chargers and cables could be professionally judged to be a part of the circuitry. We don't believe this is the intent, but again leaves too much to the imagination of an overzealous auditor. Truly most of our issues are with the definition, but until that is corrected we cannot vote for either.
Response:	Thank you for your comment. 1. A definition of "Component" has been added to the Standard and the Tables have been rearranged and considerably revised to improve clarity. Please see new Tables 1-1 through 1-5. 2. The dc supply component specifically includes battery chargers within the new Table 1-4.
Segment:	3
Organization:	Public Utility District No. 1 of Chelan County
Member:	Kenneth R. Johnson
Comment:	Comments: 1. It is still unclear whether relays that respond to mechanical inputs, such as sudden pressure relays, are included in the proposed definition as protective relays. While PRC-005-2 R1 limits the scope of that particular standard to protection systems that sense electrical quantities, it is remains unclear in other standards that use the defined term whether mechanical input protections are included. 2. We suggest that "Protective Relay" also be defined, and that the definition clearly exclude devices that respond to mechanical inputs in line with the NERC interpretation of PRC-005-1 in response to the CMPWG request.
Response:	Thank you for your comment. 1. The definition of Protection System has been modified to specifically limit it to protective relays that

	respond to electrical quantities. 2. IEEE has provided a definition of protective relay, and the SDT sees no need to repeat or change that definition within this Standard.
Segment:	3, 3
Organization:	Municipal Electric Authority of Georgia, MEAG Power
Member:	Steven M. Jackson, Steven Grego
Comment:	1. Station DC supply testing was set at three months. A six month time based testing interval is reasonable. 2. Maximum maintenance interval for a lead-acid vented battery is listed at six calendar years. This type of test reduces battery life. A 10 to 12 year interval is reasonable. As written this rule would require a TFE that should be administratively unnecessary. 3. Additional clarification is needed in: Control and trip circuits associated with UVLS and UFLS do not require tripping of the breakers but all other protection systems require tripping. Please clarify. 4. Digital relays have electromagnetic output relays - are they categorized as electromechanical or solid state? 5. There needs to be reasonable flexibility based on industry experience in allowing less than 100% perfection in the testing of relays, etc.
Response:	Thank you for your comment. 1. The SDT disagrees. 2. The SDT disagrees. 3. The Tables have been rearranged and considerably revised to improve clarity. Please see new Table 1-5. 4. The Tables have been rearranged and considerably revised to improve clarity. Please see new Table 1-1. 5. The NERC criteria for VSLs do not currently permit them to allow some level of non-performance without being in violation.
Segment:	3, 4, 5
Organization:	Cowlitz County PUD

Member:	Russell A Noble, Rick Syring, Bob Essex
Comment:	Cowlitz agrees with most of the changes; however there are many issues from the last comment round that needs to be addressed with a response from the SDT. In particular, Cowlitz is concerned with the following: 1. Verify Battery cell-to-cell connection resistance" has entered the table where it did not exist before. On some types of stationary battery units, this internal connection is inaccessible. On other types the connections are accessible, but there is no way to repair them based on a bad reading. And bad cell-to-cell connections within units will be detected by the other required tests. This requirement will cause entities to scrap perfectly good batteries just so this test can be performed, with no corresponding increase in bulk electric system reliability while taking an unnecessary risk to personnel and the environment. And because buying battery units composed of multiple cells allows space saving designs, entities may be forced to buy smaller capacity batteries to fit existing spaces. This may end up having a negative effect on reliability. Suggest substituting "unit-to-unit" wherever "cell-to-cell" is used in the table now. 2. The level two table regarding Protection Station dc supply states that level one maintenance activities are to be used, but then goes on to give a list of Maintenance Activities that don't match those in level one; which activities shall Cowlitz use? Same situation for Station DC Supply (battery is not used) where the 18 month interval is missing. 3. IEEE battery maintenance standards call for quarterly inspections. These are targets, though, not maximums. An entity wishing to avoid non-compliance for an interval that might extend past three calendar months due to storms and outages must set a target interval of two months thereby increasing the number of inspections each year by half again. This is unnecessarily frequent. Cowlitz suggests changing the maximum interval for battery inspections to six calendar months. For consistency, Cowlitz also suggests that all intervals expressed as three calendar months be changed to six calendar months. 4. Cowlitz is concerned over R1.1, where all components must be identified, without a definition for the word component or the granularity specified. While the FAQ gives a definition, and allows for entity latitude in determining the granularity, the FAQ is not part of the standard. Cowlitz believes this will allow REs to claim non-compliance for every three inch long terminal jumper wire not identified in a trip circuit path. Cowlitz suggests that the FAQ definitions be included within the standard. 5. Many Distribution Providers do not own Protection Systems on the transmission side that are active devices, but rather are passive in nature, i.e., fuses. This Standard verbiage will make it necessary for all DPs

	to have a PSMP even if they do not own active Protective Systems that at least states that they have a null listing of components. This is useless paperwork.
Response:	Thank you for your comment. 1. The Tables have been rearranged and considerably revised to improve clarity. Please see new Table 1-4. This element of the table has been modified to state, "Battery internal cell-to-cell or unit-to-unit connection resistance (where available to measure)" to address this comment. 2. The Tables have been rearranged and considerably revised to improve clarity. Please see new Table 1-4. 3. The SDT disagrees. You should complete the activities within the intervals specified. 4. Requirement R1, part 1.1, has been revised to state, "Address all Protection System component types" in consideration of your comment. 5. Fuses are not a Protection System component. The SDT is not addressing what an entity that owns no relevant components must do to demonstrate that for compliance.
Segment:	3
Organization:	Consumers Energy
Member:	David A. Lapinski
Comment:	1. If multiple redundant Protection System components, with associated parallel tripping paths, are provided, Table 1a, 1b, and 1c require that each parallel path be maintained, and that the maintenance be documented. Often, these multiple schemes are provided not to meet specific reliability-related requirements, but instead to provide operating flexibility. Testing these likely will require outages, and those outages may result in decreased reliability. Further, the documentation related to maintenance of all paths will be very cumbersome, and will lead to increased compliance exposure simply by its volume. This may perversely lead to entities NOT installing the redundant schemes, resulting in decreased reliability. 2. Many of the activities described in the Tables are not, by themselves, clear. The standard should include sufficient detail such that entities are clear as to what must be done for compliance, rather that relying on supplementary documents for this information. For example, it's not clear, in Table 1a (Station DC Supply), what is meant by, "Verify that the dc supply can perform as designed when the ac power from the grid is not present." Similarly, it isn't clear from the general description within the Tables that components possessing different monitoring attributes within a single scheme may be distinguished such that differing relevant tables

	can be used for the separate components. 3. In Table 1a, Station DC Supply, one of two optional activities is to "Verify that the station battery can perform as designed by evaluating the measured cell/unit internal ohmic values to station battery baseline. Battery assemblies supplied by some manufacturers have the connections made internally, making this option unavailable. Experience with ASME standards show that NERC and SDT members may be jointly and separately liable for litigation by specifying methods that either prefer or prohibit use of certain technologies. 4. Two of the four Maintenance Activities that begin with "Perform a complete functional trip …" conclude with "… does not require actual tripping of circuit breakers or other interrupting devices. Do the other two such activities therefore require tripping of circuit breakers or other interrupting devices? 5. Performance of the minimum activities specified within Table 1a for legacy systems, particularly regarding control circuits, will require considerable disconnection and reconnection of portions of the circuits. Such activities will likely cause far more problems on restoration-to-service than they will locate and correct. We suggest that the SDT reconsider these activities with regard for this concern. 6. We do not agree that Footnotes within the Standard are an appropriate method of providing information that is important to the application of the Standard. Important information should be provided within the standard text.
Response:	Thank you for your comment. 1. The SDT believes that it is important that all parallel paths be maintained within the indicated interval, and the prescribed interval already considers the reliability benefits of parallel tripping paths. 2. The Tables have been rearranged and considerably revised to improve clarity. Please see new Tables 1-1 through 1-5. 3. The use of the term "cell/unit" acknowledges that individual cells may not be accessible, but that assemblies of several cells (into units) may be available instead, and may be used to address this requirement. An acceptable baseline value and follow-on tests may be acceptable for the entire station battery as a single unit. 4. The Tables have been rearranged and considerably revised to improve clarity. Please see new Table 1-5.

	5. The Tables have been rearranged and considerably revised to improve clarity. Please see new Table 1-5. To the degree that performance history for the components within these systems is available, a performance-based program per R3 and Attachment A may be useful in these cases. 6. The SDT removed all footnotes from the Standard.
Segment:	5
Organization:	Consumers Energy
Member:	James B Lewis
Comment:	1. If multiple redundant Protection System components, with associated parallel tripping paths, are provided, Table 1a, 1b, and 1c require that each parallel path be maintained, and that the maintenance be documented. Often, these multiple schemes are provided not to meet specific reliability-related requirements, but instead to provide operating flexibility. Testing these likely will require outages, and those outages may result in decreased reliability. Further, the documentation related to maintenance of all paths will be very cumbersome, and will lead to increased compliance exposure simply by its volume. This may perversely lead to entities NOT installing the redundant schemes, resulting in decreased reliability. 2. Many of the activities described in the Tables are not, by themselves, clear. The standard should include sufficient detail such that entities are clear as to what must be done for compliance, rather that relying on supplementary documents for this information. For example, it's not clear, in Table 1a (Station DC Supply), what is meant by, "Verify that the dc supply can perform as designed when the ac power from the grid is not present." Similarly, it isn't clear from the general description within the Tables that components possessing different monitoring attributes within a single scheme may be distinguished such that differing relevant tables can be used for the separate components. 3. In Table 1a, Station DC Supply, one of two optional activities is to "Verify that the station battery can perform as designed by evaluating the measured cell/unit internal ohmic values to station battery baseline. Battery assemblies supplied by some manufacturers have the connections made internally, making this option unavailable. Experience with ASME standards show that NERC and SDT members may be jointly and separately liable for litigation by specifying methods that either prefer or prohibit use of certain technologies. 4. Two of the four Maintenance Activities that begin with "Perform a complete functional trip …" conclude with "… does not require actual tripping of circuit breakers or other interrupting devices. Do the other two

	such activities therefore require tripping of circuit breakers or other interrupting devices? 5. Performance of the minimum activities specified within Table 1a for legacy systems, particularly regarding control circuits, will require considerable disconnection and reconnection of portions of the circuits. Such activities will likely cause far more problems on restoration-to-service than they will locate and correct. We suggest that the SDT reconsider these activities with regard for this concern. 5. We do not agree that Footnotes within the Standard are an appropriate method of providing information that is important to the application of the Standard. Important information should be provided within the standard text. 6. As for the definition, it is unclear whether "voltage and current sensing inputs" include the instrument transformer itself, or does it pertain to only the circuitry and input to the protective relays. 7. As for the definition, it is not clear what is included in the component, "station dc supply" without referring to other documents (the posted Supplementary Reference and/or FAQ) for clarification. The definition should be sufficiently detailed to be clear. 8. If Protection Systems trip via AC methods, are those systems and the associated control circuitry included in the definition and within the requirements of the Standard as expressed within the Tables?
Response:	Thank you for your comment. 1. The SDT believes that it is important that all parallel paths be maintained within the indicated interval, and the prescribed interval already considers the reliability benefits of parallel tripping paths. 2. The Tables have been rearranged and considerably revised to improve clarity. Please see new Tables 1-1 through 1-5. 3. The use of the term "cell/unit" acknowledges that individual cells may not be accessible, but that assemblies of several cells (into units) may be available instead, and may be used to address this requirement. An acceptable base-line value and follow-on tests may be acceptable for the entire station battery as a single unit. 4. The Tables have been rearranged and considerably revised to improve clarity. Please see new Table 1-5.

	5. The Tables have been rearranged and considerably revised to improve clarity. Please see new Table 1-5. To the degree that performance history for the components within these systems is available, a performance-based program per R3 and Attachment A may be useful in these cases. 6. The SDT removed all footnotes from the Standard. 7. The SDT removed all footnotes from the Standard. 8. "Control circuitry" has been revised to remove "dc" to generalize it such that "ac" tripping would be included.
Segment:	4
Organization:	Consumers Energy
Member:	David Frank Ronk
Comment:	1. If multiple redundant Protection System components, with associated parallel tripping paths, are provided, Table 1a, 1b, and 1c require that each parallel path be maintained, and that the maintenance be documented. Often, these multiple schemes are provided not to meet specific reliability-related requirements, but instead to provide operating flexibility. Testing these likely will require outages, and those outages may result in decreased reliability. Further, the documentation related to maintenance of all paths will be very cumbersome, and will lead to increased compliance exposure simply by its volume. This may perversely lead to entities NOT installing the redundant schemes, resulting in decreased reliability. 2. Many of the activities described in the Tables are not, by themselves, clear. The standard should include sufficient detail such that entities are clear as to what must be done for compliance, rather that relying on supplementary documents for this information. For example, it's not clear, in Table 1a (Station DC Supply), what is meant by, "Verify that the dc supply can perform as designed when the ac power from the grid is not present." Similarly, it isn't clear from the general description within the Tables that components possessing different monitoring attributes within a single scheme may be distinguished such that differing relevant tables can be used for the separate components. 3. In Table 1a, Station DC Supply, one of two optional activities is to "Verify that the station battery can perform as designed by evaluating the measured cell/unit internal ohmic values to station battery baseline. Battery assemblies supplied by some manufacturers have the connections made internally, making this option unavailable. Experience with ASME standards show that NERC and SDT members may be jointly and

	separately liable for litigation by specifying methods that either prefer or prohibit use of certain technologies. 4. Two of the four Maintenance Activities that begin with "Perform a complete functional trip …"conclude with "… does not require actual tripping of circuit breakers or other interrupting devices. Do the other two such activities therefore require tripping of circuit breakers or other interrupting devices? 5. Performance of the minimum activities specified within Table 1a for legacy systems, particularly regarding control circuits, will require considerable disconnection and reconnection of portions of the circuits. Such activities will likely cause far more problems on restoration-to-service than they will locate and correct. We suggest that the SDT reconsider these activities with regard for this concern. 6. In the Standard, Footnote 2 and Footnote 3 are identical. We presume that some information has been omitted. 7. We do not agree that Footnotes are an appropriate method of providing information that is important to the application of the Standard. Important information should be provided within the standard text.
Response:	Thank you for your comment. 1. The SDT believes that it is important that all parallel paths be maintained within the indicated interval, and the prescribed interval already considers the reliability benefits of parallel tripping paths. 2. The Tables have been rearranged and considerably revised to improve clarity. Please see new Tables 1-1 through 1-5. 3. The use of the term "cell/unit" acknowledges that individual cells may not be accessible, but that assemblies of several cells (into units) may be available instead, and may be used to address this requirement. An acceptable base-line value and follow-on tests may be acceptable for the entire station battery as a single unit. 4. The Tables have been rearranged and considerably revised to improve clarity. Please see new Table 1-5. 5. The Tables have been rearranged and considerably revised to improve clarity. Please see new Table 1-5. To the degree that performance history for the components within these systems is available, a performance-based program per R3 and Attachment A may be useful in these cases.

	6. The SDT removed all footnotes from the Standard. 7. The SDT removed all footnotes from the Standard.
Segment:	3
Organization:	City of Bartow, Florida
Member:	Matt Culverhouse
Comment:	The draft standard requires testing and maintenance on DC circuits of distribution systems that have no effect on the reliability of the BES which we feel is outside of the bounds of the original intent of NERC.
Response:	Thank you for your comment. The Tables have been rearranged and considerably revised to improve clarity. Please see new Table 1-5.
Segment:	2
Organization:	Midwest ISO, Inc.
Member:	Jason L Marshall
Comment:	We are abstaining because a number of our stakeholders do not agree with the definition of Protection Systems and inclusion of UFLS and UVLS in a standard dealing with maintenance of protection systems.
Response:	Thank you for your comment. FERC Order 693 suggests combining these Standards, as does the approved SAR for this project. The Tables have been rearranged and considerably revised to improve clarity. Please see new Tables 1-4 and 1-5 for the constrained activities regarding UFLS and UVLS.
Segment:	8
Organization:	Roger C Zaklukiewicz
Member:	Roger C Zaklukiewicz
Comment:	There in insufficient clarity on the Protection System components that are considered Transmission Protection System equipment which require a Distribution Provider (DP) to perform the required maintenance and testing to ensure compliance with the Standard. In certain distribution substations, components of the high voltage source that supply the distribution substation may be considered components of the Electric Bulk System and their associated protection and control systems must be specified, installed, maintained and tested in accordance with the Standard. Clear delineation of Transmission Protection Systems is therefore critical to ensure the reliability of the EPS.

Response:	Thank you for your comment. This is properly a concern regarding your regional BES definition, and the SDT is unable to respond to these concerns.
Segment:	10
Organization:	Northeast Power Coordinating Council, Inc.
Member:	Guy V. Zito
Comment:	1. There is not enough clarity on whether a Distribution Provider (DP) will be able to clearly identify which protection system components it does own and needs to maintain. Many DPs own and/or operate equipment identified in the existing or proposed definition. However, not all such equipment translates into a transmission Protection System. The definition needs clarification on when such equipment is a part of the transmission protection system. 2. Also, the time provided for the first phase "at least six months" is too open ended and does not provide entities with a clear timeline. It is suggested that one year is appropriate for the first phase phasing out the second year in stages. 3. Regarding battery visuals, the suggestion for consideration is it should be changed from 3 months to 6 months. Electrolyte levels of today's lead-calcium batteries are relatively stable for a 6 month period compared to lead-antimony batteries used in the past. 4. The Implementation plan is too short - In many instances it will be impossible to meet, especially if entities have to create, purchase and adopt new databases to track maintenance activities. Often new procedures will have to be written and additional resources justified and hired. It would be more acceptable if a staged approached was taken similar to the DME Standard. 5. Accounting for every component of a protection system will be an enormous overhead and will take away resources from actually doing maintenance. Emphasis should be on systems and not individual components. 6. The Standard does not provide a grace period if an entity is unable to meet the maintenance requirement for extenuating circumstances. For example if an entity has to divert maintenance resources to storm restoration following a major event, slack built into a maintenance program can be eaten up and put the maintenance over the prescribed period. Provision should be made for a mitigation plan to get back on track. We do not believe the reliability of the Bulk Electric System will be compromised if an entities' maintenance

	program slips by a few months due to extreme contingencies, especially if it is brought back on track within a short time frame.
Response:	Thank you for your comment. 1. This is an issue related to the regional BES definition, and the DP needs to consider their equipment in the context of this definition. 2. This comment appears to be related to the Implementation Plan for the definition (which was independent to the Standard), not to the Standard. 3. The SDT disagrees; these activities should be completed as prescribed in the Standard. 4. A staged Implementation Plan is provided for all activities that have prescribed maximum allowable intervals over one year. However, the SDT believes that a staged Implementation Plan for developing the PSMP is impractical, in that an entity cannot reasonably implement a plan until they have developed it. 5. The SDT believes that the only alternative to these criteria is to provide a binary VSL, which would mean that any non-compliance would be Severe. A definition of Component and Component Types have been added to the Standard, and Requirement R1, part 1.1, has been revised to state, "Address all Protection System component types" to assist in this task. 6. "Grace periods" within the Standard are not measurable, and would probably lead to persistently increasing intervals. However, an entity may establish an internal program with grace-period allowance, as long as the entire program (including grace periods) does not exceed the intervals within the Standard.
Segment:	1, 3
Organization:	Hydro One Networks, Inc.
Member:	Ajay Garg, Michael D. Penstone
Comment:	Hydro One is casting a negative vote for the following reasons: 1. There is not enough clarity on whether a Distribution Provider (DP) will be able to clearly identify which protection system components it does own and needs to maintain. Many DPs own and/or operate equipment identified in the existing or proposed definition. However, not all such equipment translates into a transmission Protection System. 2. The proposed definition of Protection System needs clarification on when such equipment is a part of

	the transmission protection system. Emphasis should be on systems and not individual components. 3. The time provided for the first phase "at least six months" is too open ended and does not provide entities with a clear timeline. It would be more acceptable if a staged approach was taken. 4. The Standard does not provide a grace period if an entity is unable to meet the maintenance requirement for extenuating circumstances. For example if an entity has to divert maintenance resources to storm restoration following a major event, slack built into a maintenance program can be eaten up and put the maintenance over the prescribed period. Provision should be made for a mitigation plan to get back on track. We do not believe the reliability of the Bulk Electric System will be compromised if an entities' maintenance program slips by a few months due to extreme contingencies, especially if it is brought back on track within a short time frame. 5. Table 1a: UFLS/UVLS DC control and trip circuits – Due to the distributed nature of this program, random failures to trip are not impactive to the overall operation of the UFLS protection. There should be no requirement to check the DC portion of these protections any more often than the DC circuit checks associated with that LV breaker. 6. Table 1c: some of the proposed maintenance intervals for station DC supply are too stringent and they would not produce significant increase in reliability to justify associated incremental expenditure.
Response:	Thank you for your comment. 1. This is an issue related to the regional BES definition, and the DP needs to consider their equipment in the context of this definition. 2. This is an issue related to the regional BES definition, and the DP needs to consider their equipment in the context of this definition. It seems that Protection Systems logically need to be maintained on a Component level; definitions of Component and Component Type have been added to assist. 3. This comment appears to be related to the Implementation Plan for the definition (which was independent to the Standard), not to the Standard. 4. “Grace periods” within the Standard are not measurable, and would probably lead to persistently increasing intervals. However, an entity may establish an internal program with grace-period allowance, as long as the entire program (including grace periods) does not exceed the intervals within the Standard. 5. The Tables have been rearranged and considerably revised to improve clarity. Please see new Table

	1-5 for constrained activities related to UFLS/UVLS. 6. The Tables have been rearranged and considerably revised to improve clarity. Please see new Table 1-4.
Segment:	1, 1, 3, 6
Organization:	Consolidated Edison Co. of New York, Northeast Utilities, Consolidated Edison Co. of New York, Consolidated Edison Co. of New York
Member:	Christopher L de Graffenried, David H. Boguslawski, Peter T Yost, Nickesha P Carrol
Comment:	1. There is not enough clarity on whether a Distribution Provider (DP) will be able to clearly identify which protection system components it does own and needs to maintain. Many DPs own and/or operate equipment identified in the existing or proposed definition. However, not all such equipment translates into a transmission Protection System. The definition needs clarification on when such equipment is a part of the transmission protection system. 2. Also, the time provided for the first phase "at least six months" is too open ended and does not provide entities with a clear timeline. It is suggested that one year is appropriate for the first phase phasing out the second year in stages.
Response:	Thank you for your comment. 1. This is an issue related to the regional BES definition, and the Distribution Provider needs to consider their equipment in the context of this definition. 2. This comment appears to be related to the Implementation Plan for the definition (which was independent to the Standard), not to the Standard.
Segment:	3
Organization:	Allegheny Power
Member:	Bob Reeping
Comment:	The draft standard expects 100% compliance for millions of protection system components at all times. The standard should consider a statistically based performance metric instead of a performance target that expects 100% compliance.
Response:	Thank you for your comment. The NERC criteria for VSLs do not currently permit them to allow some level

	of non-performance without being in violation.
Segment:	1, 1, 3, 6
Organization:	Keys Energy Services, Lakeland Electric, Lakeland Electric, Florida Municipal Power Pool
Member:	Stan T. Rzad, Larry E Watt, Mace Hunter, Thomas E Washburn
Comment:	1. As written, is opens up the PRC-005 standard to Technical Feasibility Exceptions because some batteries are not able to accommodate all of the tests proscribed in the draft standard. 2. The draft standard would cause NERC to regulate through the standards battery testing, DC circuit testing, etc. on distribution elements with no significant improvement to BES reliability, which is beyond the statutory scope of the standards 3. The standard unreasonably retains the "100% compliance" paradigm for thousands, if not millions of protection system components.
Response:	Thank you for your comment. 1. The Tables have been rearranged and considerably revised to improve clarity. Please see new Table 1-4. This element of the table has been modified to state, “Battery internal cell-to-cell or unit-to-unit connection resistance (where available to measure)” to address this comment. 2. The Standard only addresses distribution-located devices to the degree that they address BES issues. UFLS and UVLS per the relevant NERC Standards are frequently implemented on the distribution system. 3. The NERC criteria for VSLs do not currently permit them to allow some level of non-performance without being in violation.
Segment:	1
Organization:	Gainesville Regional Utilities
Member:	Luther E. Fair
Comment:	1. As written, is opens up the PRC-005 standard to Technical Feasibility Exceptions because some batteries are not able to accommodate all of the tests proscribed in the draft standard as explained by Steve Alexanderson in a prior e-mail to the ballot pool. 2. The draft standard would cause NERC to regulate through the standards battery testing, DC circuit testing,

	etc. on distribution elements with no significant improvement to BES reliability, which is beyond the statutory scope of the standards. 3. The standard unreasonably retains the "100% compliance" paradigm for thousands, if not millions of protection system components. These comments are the same as provided by FMPA which we support.
Response:	Thank you for your comment. 1. The Tables have been rearranged and considerably revised to improve clarity. Please see new Table 1-4. This element of the table has been modified to state, “Battery internal cell-to-cell or unit-to-unit connection resistance (where available to measure)” to address this comment. 2. The Standard only addresses distribution-located devices to the degree that they address BES issues. UFLS and UVLS per the relevant NERC Standards are frequently implemented on the distribution system. 3. The NERC criteria for VSLs do not currently permit them to allow some level of non-performance without being in violation.
Segment:	1, 4, 5
Organization:	Lake Worth Utilities, Florida Municipal Power Agency, Florida Municipal Power Agency
Member:	Walt Gill, Frank Gaffney, David Schumann
Comment:	1. As written, is opens up the PRC-005 standard to Technical Feasibility Exceptions because some batteries are not able to accommodate all of the tests proscribed in the draft standard 2. The draft standard would cause NERC to regulate through the standards battery testing, DC circuit testing, etc. on distribution elements with no significant improvement to BES reliability, which is beyond the statutory scope of the standards 3. The standard unreasonably retains the "100% compliance" paradigm for thousands, if not millions of protection system components. 4. Will the Standard Introduce Technical Feasibility Exceptions to PRC Standards? A large proportion of the batteries (as high as 50% as reported by some SMEs) are not able to accommodate all of the tests prescribed in the draft standard. Will this necessitate the introduction of TFEs into the process unnecessarily? 5. The Standard Reaches beyond the Statutory Scope of the Reliability Standards As written, the

	standard requires testing of batteries, DC control circuits, etc., of distribution level protection components associated with UFLS and UVLS. UFLS and UVLS are different than protection systems used to clear a fault from the BES. An uncleared fault on the BES can have an Adverse Reliability Impact and hence; the focus on making sure the fault is cleared is important and appropriate. However, a UFLs or UVLS event happens after the fault is cleared and is an inexact science of trying to automatically restore supply and demand balance (UFLS) or restore voltages (UVLS) to acceptable levels. If a few UFLS or UVLS relays fail to operate out of potentially thousands of relays with the same function, there is no significant impact to the function of UFLS or UVLS. Hence, there is no corresponding need to focus on every little aspect of the UFLS or UVLS systems. Therefore, the only component of UFLS or UVLS that ought to be focused on in the new PRF-005 standard is the UFLS or UVLS relay itself and not distribution class equipment such as batteries, DC control circuitry, etc., and these latter ought to be removed from the standard. 6. In addition, most distribution circuit are radial without substation arrangements that would allow functional testing without putting customers out of service while the testing was underway, or at least without momentary outages while customers were switched from one circuit to another. Therefore, as written, we would be sacrificing customer service for a negligible impact on BES reliability. 7. Perfection is Not A Realistic Goal The standard allows no mistakes. Even the famous six sigma quality management program allows for defects and failures (i.e., six sigma is six standard deviations, which means that statistically, there are events that fall outside of six standard deviations). PRC-005 has been drafted such that any failure is a violation, e.g., 1 day late on a single relay test of tens of thousands of relays is a violation. That is not in alignment with worldwide accepted quality management practices (and also makes audits very painful because statistical, random sampling should be the mode of audit, not 100% review as is currently being done in many instances). FMPA suggests considering statistically based performance metrics as opposed to an unrealistic performance target that does not allow for any failure ever. Due to the sheer volume of relays, with 100% performance required, if the standards remain this way, PRC-005 will likely be in the top ten most violated standards for the forever. There is a fundamental flaw in thinking about reliability of the BES. We are really not trying to eliminate the risk of a widespread blackout; we are trying to reduce the risk of a widespread blackout. We plan and operate the system to single and credible double contingencies and to finite operating and planning reserves. To eliminate the risk, we would need to plan and operate to an infinite number of contingencies, and have an infinite reserve margin, which is infeasible. Therefore, by definition, there is a finite risk of a widespread blackout that we are trying to reduce, not eliminate, and, by definition, by planning and operating to single and credible double

	contingencies and finite operating and planning reserves, we are actually defining the level of risk from a statistical basis we are willing to take. With that in mind, it does not make sense to require 100% compliance to avoid a smaller risk (relays) when we are planning to a specified level of risk with more major risk factors (single and credible double contingencies and finite planning and operating reserves).
Response:	Thank you for your comment. 1. The Tables have been rearranged and considerably revised to improve clarity. Please see new Table 1-4. This element of the table has been modified to state, "Battery internal cell-to-cell or unit-to-unit connection resistance (where available to measure)" to address this comment. 2. The Standard only addresses distribution-located devices to the degree that they address BES issues. UFLS and UVLS per the relevant NERC Standards are frequently implemented on the distribution system. 3. The NERC criteria for VSLs do not currently permit them to allow some level of non-performance without being in violation. 4. No. The Tables have been rearranged and considerably revised to improve clarity. Please see new Table 1-4. This element of the table has been modified to state, "Battery internal cell-to-cell or unit-to-unit connection resistance (where available to measure)" to address this comment. 5. The Standard only addresses distribution-located devices to the degree that they address BES issues. UFLS and UVLS per the relevant NERC Standards are frequently implemented on the distribution system. 6. The Standard does not require functional testing, although it may be the most practical method of completing some of the required activities. There are other methods, too, of completing these. 7. The NERC criteria for VSLs do not currently permit them to allow some level of non-performance without being in violation.
Segment:	4
Organization:	Illinois Municipal Electric Agency
Member:	Bob C. Thomas
Comment:	IMEA is supportive of the intent of PRC-005-2; however, based on monitoring of comments submitted to date, IMEA would like to see concerns addressed before voting to affirm this proposed standard revision. IMEA supports the comments expressed during ballot pool communications that provisions need to be included to avoid the possible necessity of having to use the burdensome TFE process and to avoid the

	unrealistic expectation of perfection in recordkeeping and exactness of maintenance schedule dates.
Response:	Thank you for your comment. Responses have been provided to the various ballot comments.
Segment:	1
Organization:	Georgia Transmission Corporation
Member:	Harold Taylor, II
Comment:	The SDT has made significant changes to the minimum maintenance activities and maximum allowable intervals within Tables 1a, 1b, and 1c, particularly related to station dc supply and dc control circuits. Do you agree with these changes? If not, please provide specific suggestions for improvement. Comments: 1. Do not agree with the 3 calendar months interval and suggest using quarterly. Both terms require a minimum of four inspections per year have proven to be successful, but the term "quarterly" provides a bit more flexibility than the term "3 calendar months". Given a 3 month maximum interval an entity would need to schedule these tasks every 2 months. 2. As the current requirements are written in R1 of PRC-005-2 Draft, we disagree with the terms identify all Protection System components. We recommend a less prescriptive requirement as listed below. R1.1 Identify BES substations or facilities containing Protection Systems. R1.2 Identify whether Protection Systems per substation or facilities are addressed through time-based, condition-based, performance based or a combination based etc. R1.3 For each substation/facility with Protection Systems include all maintenance activities etc. 3. Listing each individual Protection System component as current draft is onerous and impedes any interpretation of application with very little value. 4. The standard as written will require a great deal of effort by the utilities to maintain 100% compliance as listed. The concern is the power system design allows for some contingencies but the standard allows for no errors. Failing to complete 1% of the maintenance by 1 day infers an entity is out of compliance or in violation. The violations should start for more than a level of 5% not identified, or not maintained. 5. We feel the minor changes of wording as described in R1.1 – R1.3 as listed above will go a long way in

	removing the concerns of the standard. We feel the intent of the standard is sound and request minor changes to facilitate an interpretable standard that sensibly mitigates problems with the BES. As the standard written, the interpretation seems to create a stringent environment with undue compliance requirements. 6. Lastly, the SDT should attempt to embrace Gerry Cauley's vision of "results-based standards" and clearly identify the "risk mitigation objectives, reliability result or outcome" of the revised requirements and allow each entity to meet the outcome and mitigate the risk without writing in such a prescriptive manner which is not preferred. The prescriptive details currently proposed in the standard could then be captured in a reference document.
Response:	Thank you for your comment. 1. The SDT disagrees. Once per calendar quarter would allow up to six months between inspections, while three calendar months limits the effective interval to four months (minus 2 days). 2. Modifying Requirement R1 as you suggest would make it so general that it would be difficult to measure for compliance. Additionally, because of the variety of types of component within a substation, it may be difficult to define a substation-wide (or facility-wide) PSMP that addresses all components and intervals. A definition of Component has been added to the Standard, and Requirement R1, part 1.1, has been revised to state, "Address all Protection System component types". 3. A definition of Component has been added to the Standard to assist; also, Requirement R1, part 1.1, has been revised to state, "Address all Protection System component types" in consideration of your comment. 4. The NERC criteria for VSLs do not currently permit them to allow some level of non-performance without being in violation. 5. As noted above, the SDT believes that Requirement R1 would no longer be measurable. 6. The SDT agrees that the SDT may effectively embrace the "results-based" approach within this Standard; however, doing so at this time would delay development of this high-priority Standard. This is reflected on pages 13-14 of the current draft Standards Development Plan that is out for comment at this time.
Segment:	3, 4
Organization:	Georgia System Operations Corporation
Member:	R Scott S. Barfield-McGinnis, Guy Andrews

Comment:	1. Do not agree with the 3 calendar months interval and suggest using quarterly. Both terms require a minimum of four inspections per year have proven to be successful, but the term "quarterly" provides a bit more flexibility than the term "3 calendar months". Given a 3 month maximum interval an entity would need to schedule these tasks every 2 months. 2. As the current requirements are written in R1 of PRC-005-2 Draft, we disagree with the terms identify all Protection System components. We recommend a less prescriptive requirement as listed below. -R1.1 Identify BES substations or facilities containing Protection Systems. -R1.2 Identify whether Protection Systems per substation or facilities are addressed through time-based, condition-based, performance based or a combination based etc. -R1.3 For each substation/facility with Protection Systems include all maintenance activities etc. 3. The VRF for R1 ranking should be lower or no greater than R2, R3, and R4. The task of identifying Protection System components has very little to do with increasing reliability of the BES. The implementation of the PSMP most likely will cover all the specific functions of Protection System components although the entity failed to identify all PS components. We recommend the above language changes and agree the requirement adds some value but not a high-risk value to the BES. 4. After correcting the language we feel that a requirement of 100% maintenance on 100% of all components as listed on page 6 of the standard for the VSLs leaves no room for error for systems designed with contingences. The violations should start for more than a level of 5% not identified, not maintained, etc. 5. Listing each individual Protection System component as current draft is onerous and impedes any interpretation of application with very little value. The standard as written will require a great deal of effort by the utilities to maintain 100% compliance as listed. The concern is the power system design allows for some contingencies but the standard allows for no errors. Failing to complete 1% of the maintenance by 1 day infers an entity is out of compliance or in violation. The violations should start for more than a level of 5% not identified, or not maintained. 6. We feel the minor changes of wording as described in R1.1 – R1.3 as listed above will go a long way in removing the concerns of the standard. We feel the intent of the standard is sound and request minor changes to facilitate an interpretable standard that sensibly mitigates problems with the BES. As the standard written, the interpretation seems to create a stringent environment with undue compliance requirements.

	7. Lastly, the SDT should attempt to embrace Gerry Cauley's vision of "results-based standards" and clearly identify the "risk mitigation objectives, reliability result or outcome" of the revised requirements and allow each entity to meet the outcome and mitigate the risk without writing in such a prescriptive manner which is not preferred. The prescriptive details currently proposed in the standard could then be captured in a reference document.
Response:	Thank you for your comment. 1. The SDT disagrees. Once per calendar quarter would allow up to six months between inspections, while three calendar months limits the effective interval to four months (minus 2 days). 2. Modifying Requirement R1 as you suggest would make it so general that it would be difficult to measure for compliance. Additionally, because of the variety of types of component within a substation, it may be difficult to define a substation-wide (or facility-wide) PSMP that addresses all components and intervals. A definition of Component has been added to the Standard, and Requirement R1, part 1.1, has been revised to state, "Address all Protection System component types". 3. The VRFs have been revised. 4. The NERC criteria for VSLs do not currently permit them to allow some level of non-performance without being in violation. 5. A definition of Component has been added to the Standard to assist; also, Requirement R1, part 1.1, has been revised to state, "Address all Protection System component types" in consideration of your comment. 6. As noted above, the SDT believes that Requirement R1 would no longer be measurable. 7. The SDT agrees that the SDT may effectively embrace the "results-based" approach within this Standard; however, doing so at this time would delay development of this high-priority Standard. This is reflected on pages 13-14 of the current draft Standards Development Plan that is out for comment at this time.
Segment:	1, 3, 6
Organization:	FirstEnergy Energy Delivery, FirstEnergy Solutions, Kevin Querry
Member:	Robert Martinko, Kevin Querry, Mark S Travaglianti
Comment:	Please see FE comments for suggested enhancements submitted via the parallel comment period for this standard.

Response:	Thank you for your comment. Please see the SDT response in the Consideration of Comments.
Segment:	1, 3, 5, 6
Organization:	Entergy Corporation, Entergy, Entergy Corporation, Entergy Services, Inc.
Member:	George R. Bartlett, Joel T Plessinger, Stanley M Jaskot, Terri F Benoit
Comment:	The following are the reasons associated with our Negative Ballot. 1. Table 1a contains "Type of Protection System Component" entry "Control and trip circuits with electromechanical trip or auxiliary contacts (except for microprocessor relays, UFLS or UVLS)". However, there is no Component entry for the exception (except for microprocessor relays, UFLS or UVLS). Please add a Component entry with associated intervals and activities for: "Control and trip circuits with electromechanical trip or auxiliary contacts" with a microprocessor relay application. 2. The term "check" has replaced "verify" for some maintenance activities. Replace "verify" with "check" in all locations in the Tables. 3. Redefine "verification" to "A means of determining or checking that the component is functioning properly or maintenance correctable issues are identified". 4. We support this project and believe it is a positive step towards BES reliability. However, we believe the draft document needs additional work as per our comments. Also, as indicated by the amount of industry input on the last version draft comments, we believe revisions are still needed to properly address this technically complex standard. 5. If this standard is to deviate from the original project schedule and follow a fast track timeline for approval, then we disagree with the 3 month implementation for Requirement 1 and ask for at least 12 months. The original schedule provided sufficient advance notice to work on an implementation plan and it included the typical time required for NERC Board of Trustees and regulatory approvals. If the project schedule and typical NERC Board of Trustees and regulatory approval times are to be accelerated, the implementation plan should be extended. We reserve the right to include selected reasons submitted by other Negative balloters for their Negative Ballot.
Response:	Thank you for your comment. 1. The Tables have been rearranged and considerably revised to improve clarity. Please see new Table

	1-5. 2. The Tables have been rearranged and considerably revised to improve clarity. Please see new Table 1-5. 3. "Check" is not an element of the PSMP definition. This term, throughout the tables, has been replaced with whatever term of the definition is relevant. 4. Thank you. 5. The Implementation Plan for Requirement R1 has been revised from three months to twelve months.
Segment:	1
Organization:	Empire District Electric Co.
Member:	Ralph Frederick Meyer
Comment:	It is still unclear whether relays that respond to mechanical inputs, such as sudden pressure relays, are included in the proposed definition as protective relays. While PRC-005-2 R1 limits the scope of that particular standard to protection systems that sense electrical quantities, it is remains unclear in other standards that use the defined term whether mechanical input protections are included. We suggest that "Protective Relay" also be defined, and that the definition clearly exclude devices that respond to mechanical inputs in line with the NERC interpretation of PRC-005-1 in response to the CMPWG request.
Response:	Thank you for your comment. The Protection System definition has been revised to explicitly include only protective relays that respond to electrical quantities. This definition applies to all uses of this term within NERC Standards. The SDT feels that the IEEE definition of protective relay is adequate and sees no need to either repeat or change that definition.
Segment:	1
Organization:	Colorado Springs Utilities
Member:	Paul Morland
Comment:	CSU offers the following comments: With BES still not defined it is difficult to determine what the standard applies to. Requirements are confusing at times, making the standard difficult to audit.
Response:	Thank you for your comment. This concern is a BES concern, and the SDT is unable to address or resolve it.
Segment:	1

Organization:	Avista Corp.
Member:	Scott Kinney
Comment:	Avista has the following comments: 1. The modified definition of Protection System now refers to “functions” rather than “devices.” What are the “functions?” This new term adds confusion without being defined in the standard. 2. Considering all the time spent by Regional Entities and utilities discussing what is meant by monthly, quarterly, annual, etc., this standard should clearly define a Calendar Year and Calendar Month to eliminate any confusion. 3. In general, the requirements of the Standard are very prescriptive and granular which seem counter to the newly adopted NERC philosophy of implementing “performance-based” or “results-based” standards. Specifically, the relay testing requirements are very extensive and not entirely practical when it comes to conducting actual breaker tripping for testing. Also, there are now different maintenance and testing requirements for station batteries depending on the type of battery in service. What’s the real added reliability to the BES to add this complexity to the maintenance program? Considering these observations, is there some real historical research that has gone into determining these requirements? In general, how did the drafting team arrive at the maximum allowable maintenance and testing intervals for inclusion in the Standard, i.e., what is the technical basis for their decisions regarding this?
Response:	Thank you for your comment. 1. “Functions” acknowledge that, while protective relays (or protective devices) is the most common implementation, other devices are now used (particularly in SPSs) that provide these functions from other than traditional relays. 2. A “calendar year” is a single number year on the Gregorian calendar; a calendar month is any one of the twelve months within a single calendar year. Please see Section 8.3 of the Supplementary Reference document. 3. Please see Section 8.3 of the Supplemental Reference document for a discussion of the determination of relay and communications system intervals. For the other components, the SDT studied other sources such as IEEE standard, EPRI documents, visited with various industry experts (such as within IEEE), conducted informal surveys of existing practices, and adjusted to conform to concerns such as generator outage intervals.
Segment:	3

Organization:	Central Lincoln PUD
Member:	Steve Alexanderson
Comment:	1. The SDT has made significant changes to the minimum maintenance activities and maximum allowable intervals within Tables 1a, 1b, and 1c, particularly related to station dc supply and dc control circuits. Do you agree with these changes? If not, please provide specific suggestions for improvement. 0 Yes X No Comments: We agree with most of the changes from the last draft. However, the phrase "Verify Battery cell-to-cell connection resistance" has entered the table where it did not exist before. On some types of stationary battery units, this internal connection is inaccessible. On other types the connections are accessible, but there is no way to repair them based on a bad reading. And bad cell-to-cell connections within units will be detected by the other required tests. This requirement will cause entities to scrap perfectly good batteries just so this test can be performed, with no corresponding increase in bulk electric system reliability while taking an unnecessary risk to personnel and the environment. And because buying battery units composed of multiple cells allows space saving designs, entities may be forced to buy smaller capacity batteries to fit existing spaces. This may end up having a negative effect on reliability. Suggest substituting "unit-to-unit" wherever "cell-to-cell" is used in the table now. 2. The SDT has included VRFs and Time Horizons with this posting. Do you agree with the assignments that have been made? If not, please provide specific suggestions for improvement. X Yes 0 No Comments: 3. The SDT has included Measures and Data Retention with this posting. Do you agree with the assignments that have been made? If not, please provide specific suggestions for improvement. X Yes 0 No Comments: 4. The SDT has included VSLs with this posting. Do you agree with the assignments that have been made? If not, please provide specific suggestions for change. 0 Yes X No Comments: It is possible that a component that failed to be individually identified per R1.1 was included by entity A's maintenance plan. This documentation issue gets a higher VSL than entity B that identified a component without maintaining it. We suggest the R1 VSL be change to Low, since we believe lack of maintenance to be more severe than documentation issues. 5. The SDT has revised the "Supplementary Reference" document which is supplied to provide supporting discussion for the Requirements within the standard. Do you agree with the changes? If not, please provide

	specific suggestions for change. X Yes 0 No Comments: 6. The SDT has revised the "Frequently-Asked Questions" (FAQ) document which is supplied to address anticipated questions relative to the standard. Do you agree with these changes? If not, please provide specific suggestions for change. X Yes 0 No Comments: 7. If you have any other comments on this Standard that you have not already provided in response to the prior questions, please provide them here. Comments: The level 2 table regarding Protection Station dc supply states that level 1 maintenance activities are to be used, but then goes on to give a list of Maintenance Activities that don't match those in level 1. Which activities shall we use? 8. Same situation for Station DC Supply (battery is not used) where the 18 month interval is missing. IEEE battery maintenance standards call for quarterly inspections. These are targets, though, not maximums. An entity wishing to avoid non-compliance for an interval that might extend past three calendar months due to storms and outages must set a target interval of two months thereby increasing the number of inspections each year by half again. This is unnecessarily frequent. We suggest changing the maximum interval for battery inspections to 4 calendar months. For consistency, we also suggest that all intervals expressed as 3 calendar months be changed to 4 calendar months. 9. We are concerned over R1.1, where all components must be identified, without a definition for the word component or the granularity specified. While the FAQ gives a definition, and allows for entity latitude in determining the granularity, the FAQ is not part of the standard. We believe this will allow REs to claim non-compliance for every three inch long terminal jumper wire not identified in a trip circuit path. We suggest that the FAQ definitions be included within the standard.
Response:	Thank you for your comment. 1. The Tables have been rearranged and considerably revised to improve clarity. Please see new Table 1-4. This element of the table has been modified to state, "Battery internal cell-to-cell or unit-to-unit connection resistance (where available to measure)" to address this comment. 2. Thank you. 3. Thank you. 4. Requirement R1, part 1.1, has been revised to state, "Address all Protection System component types" and the VSL for Requirement R1 modified in consideration of your comment.

	5. Thank you. 6. Thank you. 7. The Tables have been rearranged and considerably revised to improve clarity. Please see new Table 1-4. 8. The SDT disagrees; the components should be maintained as specified within the new tables. 9. Requirement R1, part 1.1, has been revised to state, "Address all Protection System component types" in consideration of your comment. Definitions were also added to the Standard for Component Type and Component.
Segment:	3, 5, 6
Organization:	Lincoln Electric System
Member:	Bruce Merril, Dennis Florom, Eric Ruskamp
Comment:	LES would like to thank the Drafting Team for its time and effort in developing the standard. However, the standard as currently drafted raises concern as it relates to the identification of all Protection System components. LES asks the Drafting Team to further examine the impact of implementing such a rigorous maintenance program that could potentially impose unnecessary burden and reliability risk with an overly prescriptive approach. Redundancy has been implemented in great detail throughout the history of protection systems to ensure they function as intended. In addition to the comments submitted through the MRO NSRS group comment form, LES would like to further emphasize the following points of contention: (1) Consider revising to consider maintenance activities on a communications channel basis in which intermediate device functioning can be verified by sending a signal from one relay to another. (2) R1, the statement "or are designed to provide protection for the BES" re-opens the argument about transformer protection or breaker failure protection for transformer high-side breakers tripping BES breakers being included in transmission protection systems. (3) Table 1b "breaker trip coil, each auxiliary relay, and each lockout relay" should be changed from a 6 to 12 year interval similar to relay input and outputs. Experience has shown that these both have similar reliability. (4) Include a detailed example of an Inventory List for voltage and current sensing input. (5) Remove "proper functioning of" from the maintenance activities for voltage and current sensing inputs.

	One is not verifying the functionality of the signals. (6) Clarify why control circuitry is stated separately such as in "Control and trip circuits". This implies that close circuit DC paths are not subjects a PSMP when reclosing and closing of breakers have never before been considered part of a Protection System.
Response:	Thank you for your comment. 1. The Tables have been rearranged and considerably revised to improve clarity. Please see new Table 1-2. Functional end-to-end testing would be one method of completing the necessary verification. 2. This is an issue regarding your regional BES definition, and this SDT is unable to resolve such issues. 3. The SDT believes that mechanical solenoid-operated devices share performance attributes (and failure modes) with electromechanical relays and need to be tested at similar intervals. Performance-Based maintenance is an option to increase the intervals if the performance of these devices supports those intervals. 4. The SDT does not understand this comment. The Protection System definition has been changed; perhaps this will help. 5. The Tables have been rearranged and considerably revised to improve clarity. Please see new Table 1-3. **6.** This component of the definition is stated to apply as "associated with protective functions" and thus excludes close/reclosing circuits. Please see FAQ II.1.A.
Segment:	4
Organization:	Madison Gas and Electric Co.
Member:	Joseph G. DePoorter
Comment:	1. The six implementation plan is too quick for some entities. A 1 year implementation is recommended. 2. With the addition of all UFLS in this standard, it is implied battery testing, DC circuit testing, etc. on distribution elements are part of the BES. This may lead to every wire and component to be classified as being a part of the BES.
Response:	Thank you for your comment. 1. This comment appears to be focused on the Implementation Plan for the definition, not for the Standard.

	2. The Tables have been rearranged and considerably revised to improve clarity. Please see new Tables 1-4 and 1-5 for simplified maintenance activities relevant to UFLS.
Segment:	8
Organization:	SPS Consulting Group Inc.
Member:	Jim R Stanton
Comment:	1. I share the concerns expressed by FMPA that the overly prescriptive battery testing requirements will require a TFE process that would be tedious to manage. The standard goes far beyond the scope of Reliability Standards to protect the BES. Reliability Standards should state "what" needs to be done, not "how" to do it. Such overly prescriptive requirements blunt the development of superior and more efficient processes by the industry. 2. Table 1a column "Maintenance Activity" should be renamed "Suggested Maintenance Activity". 3. Tables 1a, b, and c should be reference documents and not referred to in the Requirements. This is especially true since we find terms like "where applicable" and "physical condition" in the tables that forces the Registered Entity to make judgment calls that may not align with the judgment of the auditors. This will mean more interpretation requests and will make the standard extremely difficult to audit as the Registered Entities and auditors compare their "judgments."
Response:	Thank you for your comment. 1. The Tables have been rearranged and considerably revised to improve clarity. Please see new Table 1-4. This element of the table has been modified to state, “Battery internal cell-to-cell or unit-to-unit connection resistance (where available to measure)” to address this comment. The SDT has prescribed “what,” not “how,” except for those rare cases where it is necessary to specify both. 2. The “activities” in the Tables are required, not suggested. 3. The Tables have been rearranged and considerably revised to improve clarity. Please see new Tables 1-1 through 1-5. These Tables are made requirements by incorporation within Requirement R4, part 4.1, and therefore are not reference documents. They are created in response to FERC Order 693 and the approved SAR which assigned the SDT to develop a Standard with maximum allowable intervals and minimum maintenance activities.
Segment:	10
Organization:	Midwest Reliability Organization

Member:	Dan R. Schoenecker
Comment:	"The MRO's NERC Standards Review Subcommittee believes the proposed implementation plan for R1 is unreasonably short. It proposes that: "Entities shall be 100% compliant on the first day of the first calendar quarter three months following applicable regulatory approvals, or in those jurisdictions where no regulatory approval is required, on the first day of the first calendar quarter six months following Board of Trustees adoption." We believe the implementation periods should be expanded to twice what was proposed in the implementation plan due to the sheer volume of equipment that will need to meet compliance. Thus, we propose an alternate implementation plan for requirement R1, "Entities shall be 100% compliant on the first day of the first calendar quarter six months following applicable regulatory approvals, or in those jurisdictions where no regulatory approval is required, on the first day of the first calendar quarter twelve months following Board of Trustees adoption."
Response:	Thank you for your comment. The Implementation Plan for Requirement R1 has been modified from three months to twelve months in consideration of your comment.
Segment:	4
Organization:	Alliant Energy Corp. Services, Inc.
Member:	Kenneth Goldsmith
Comment:	The Implementation Plan is unreasonably short, for the number of assets. The time period should be doubled to be more practicable.
Response:	Thank you for your comment. The Implementation Plan for Requirement R1 has been modified from three months to twelve months in consideration of your comment.
Segment:	1, 3, 5, 6
Organization:	Manitoba Hydro
Member:	Michelle Rheault, Greg C Parent, Mark Aikens, Daniel Prowse
Comment:	The proposed timelines are not reasonable. See submitted comments.
Response:	Thank you for your comment. Please see the SDT response in the Consideration of Comments.
Segment:	10
Organization:	Western Electricity Coordinating Council
Member:	Louise McCarren

Comment:	Lack of clarity or apparent conflict between certain requirements would make compliance assessment difficult.
Response:	Thank you for your comment.
Segment:	1
Organization:	Clark Public Utilities
Member:	Jack Stamper
Comment:	My negative vote reflects the ambiguity and over-stepping issues discussed in many of the comments.
Response:	Thank you for your comment. Please see the SDT response in the Consideration of Comments.
Segment:	1, 3, 5, 6
Organization:	Kansas City Power & Light Co.
Member:	Michael Gammon, Charles Locke, Scott Heidtbrink, Thomas Saitta
Comment:	The proposed changes in the Standard are far too prescriptive and do not take into account the multitude of manufacturers equipment by establishing broad maintenance cycles and testing intervals.
Response:	Thank you for your comment.
Segment:	1
Organization:	Public Utility District No. 1 of Chelan County
Member:	Chad Bowman
Comment:	The requirements are confusing and at times seem to be in conflict with or duplicative of other requirements. From a compliance perspective, this confusion would make the standard difficult to interpret for compliance and audit purposes.
Response:	Thank you for your comment. The Requirements and Tables have been rearranged and considerably revised to improve clarity. Please see new Tables 1-1 through 1-5.
Segment:	3
Organization:	Wisconsin Public Service Corp.
Member:	Gregory J Le Grave
Comment:	The standard and associated definitions as written are too vague, which leave room for varying interpretation.

Response:	Thank you for your comment. The Requirements, definitions, and Tables have been rearranged and considerably revised to improve clarity. Please see new Tables 1-1 through 1-5.
Segment:	1, 3
Organization:	Tri-State G & T Association Inc.
Member:	Keith V. Carman, Janelle Marriott
Comment:	Clarification is needed to address the potentially onerous implementation, administration, audit of the proposed revisions.
Response:	Thank you for your comment.
Segment:	5
Organization:	Tenaska, Inc.
Member:	Scott M. Helyer
Comment:	This standard has become too prescriptive and does too much to say "how" instead of "what" to do. Some of the information in the various tables may or may not conflict with manufacturer recommended practices. It is not clear at all whether such detail will lead to an increased level of reliability versus simply having consistency for the sake of consistency.
Response:	Thank you for your comment. The SDT has prescribed “what,” not “how,” except for those rare cases where it is necessary to specify both. Also, FERC Order 693 and the approved SAR assigned the SDT to develop a Standard with maximum allowable intervals and minimum maintenance activities.
Segment:	6
Organization:	Florida Power & Light Co.
Member:	Silvia P Mitchell
Comment:	This standard is too prescriptive and will result in many violations.
Response:	Thank you for your comment. FERC Order 693 and the approved SAR assigned the SDT to develop a Standard with maximum allowable intervals and minimum maintenance activities.
Segment:	9
Organization:	Oregon Public Utility Commission
Member:	Jerome Murray

Comment:	The requirements in the latest draft are confusing and at times seem to be in conflict with other requirements. From a compliance and enforcement perspective, this confusion would make the standard difficult to audit.
Response:	Thank you for your comment. The Requirements, definitions, and Tables have been rearranged and considerably revised to improve clarity. Please see new Table 1-5.
Segment:	1, 6
Organization:	SCE&G
Member:	Henry Delk, Jr., Matt H Bullard
Comment:	While SCE&G believes the majority of the PRC-005-2 standard is ready to be affirmed there are still inconsistencies with areas of the standard that need to be corrected prior to approval. These inconsistencies are addressed in SCE&G's comments which have been submitted for the current draft of this standard.
Response:	Thank you for your comment. Please see the SDT response in the Consideration of Comments.
Segment:	1, 3, 5, 6
Organization:	Xcel Energy, Inc.
Member:	Gregory L Pieper, Michael Ibold, Liam Noailles, David F. Lemmons
Comment:	Xcel Energy believes the standard still contains many aspects that are not clearly understood by entities, including what is needed to demonstrate a compliant PSMP. Comments have been submitted concurrently to NERC via the draft comment response form.
Response:	Thank you for your comment. Please see the SDT response in the Consideration of Comments.
Segment:	8
Organization:	Utility Services LLC
Member:	Brian Evans-Mongeon
Comment:	See filed comments
Response:	Thank you for your comment. Please see the SDT response in the Consideration of Comments.
Segment:	1
Organization:	Baltimore Gas & Electric Company

Member:	John J. Moraski
Comment:	Please refer to BGE comments submitted for Project 2007-17 / PRC-005-2 Draft 2, submitted on 7/16/2010.
Response:	Thank you for your comment. Please see the SDT response in the Consideration of Comments.
Segment:	1, 3, 5, 6
Organization:	Public Service Electric and Gas Co., PSEG Energy Resources & Trade LLC
Member:	Kenneth D. Brown, Jeffrey Mueller, David Murray, James D. Hebson
Comment:	Please reference comments submitted by the PSEG companies on the official comment form for this standard.
Response:	Thank you for your comment. Please see the SDT response in the Consideration of Comments.
Segment:	1, 3, 3, 3, 3, 5
Organization:	Southern Company Services, Inc., Alabama Power Company, Georgia Power Company, Gulf Power Company, Mississippi Power, Southern Company Generation
Member:	Horace Stephen Williamson, Richard J. Mandes, Anthony L Wilson, Gwen S Frazier, Don Horsley, William D Shultz
Comment:	Comments for this ballot are included in the Southern Company submitted comment form - Project 2007-17: Protection System Maintenance and Testing.
Response:	Thank you for your comment. Please see the SDT response in the Consideration of Comments.
Segment:	1
Organization:	Duke Energy Carolina
Member:	Douglas E. Hils
Comment:	Please see our responses in the comment form - thank you.
Response:	Thank you for your comment. Please see the SDT response in the Consideration of Comments.
Segment:	1
Organization:	GDS Associates, Inc.
Member:	Claudiu Cadar
Comment:	All comments included in the NERC comment form

Response:	Thank you for your comment. Please see the SDT response in the Consideration of Comments.
Segment:	3
Organization:	Louisville Gas and Electric Co.
Member:	Charles A. Freibert
Comment:	Comments will be submitte4d under the comment form
Response:	Thank you for your comment. Please see the SDT response in the Consideration of Comments.
Segment:	4, 5
Organization:	Ohio Edison Company, FirstEnergy Solutions
Member:	Douglas Hohlbaugh, Kenneth Dresner
Comment:	Please see FE comments for suggested enhancements submitted via the parallel comment period for this standard
Response:	Thank you for your comment. Please see the SDT response in the Consideration of Comments.
Segment:	5
Organization:	PPL Generation LLC
Member:	Mark A. Heimbach
Comment:	Please see comments submitted by "PPL Supply" on 7/16/10.
Response:	Thank you for your comment. Please see the SDT response in the Consideration of Comments.
Segment:	4
Organization:	Detroit Edison Company
Member:	Daniel Herring
Comment:	1. The definition should clarify whether current and voltage transformers themselves are included. 2. This implementation plan and the one for PRC-005-2 should be consistent.
Response:	Thank you for your comment. 1. These devices are included in the modified definition. This component of the Protection System definition is to generally include this functionality as a part of the Protection System. The detailed applicability of this component within PRC-005-2 is addressed within the Standard.

	2. This comment appears to be addressing the Implementation Plan for the Definition, not for the Standard.
Segment:	9
Organization:	California Energy Commission
Member:	William Mitchell Chamberlain
Comment:	The current proposal does not require coordination within the interconnection. 1. The standard should require the PCs within an interconnection to coordinate a UFLS Design with all other PCs within the interconnection and that the PCs should be required to develop a coordinated interconnection wide UFLS Design. As proposed the standard could conceivably result in as many different UFLS plans within WECC as there are Planning Coordinators. Additionally, the proposed standard fails to address UFLS relays which are currently part of the existing program which are owned by the customer. Recognition of customer owned relays is critical to have a successful program. To assure areas are covered the LSE needs to be included in the Applicability section. A third concern is the proposed standard attempts to establish continent wide frequency-time curves and eliminate discrete set points. This approach fails to recognize the unique characteristics of the four individual interconnections. Frequency-time curves do not allow for specific and defined measurements and will leave individual entities defaulting to the lowest common denominator. If frequency-time curves are intended to define the boundaries, the determination of discrete set points would fall into the hands of the PCs leading to disagreements among entities. In addition, to determine the frequency-time curves through stability and dynamic modeling, one must establish discrete set points. Frequency-time curves are reverse engineering and require justification and correlation to the reliability of the interconnections – no such justification has been provided.
Response:	Thank you for your comment. Your comments appear to be directed to the NERC Standard addressing development of UFLS programs. The Protection System Maintenance and Testing SDT is unable to address these comments.

Consideration of Comments on Second Ballot — Project 2007-17 Protection System Maintenance (Protection System definition)

Date of Second Ballot: 07/23/10 - 08/02/10

Summary Consideration: There were numerous comments opposing balloting the definition separately from the definition; the NERC BOT has directed that a revised definition be approved as quickly as possible to close a reliability gap. Many other comments were offered relative to the standard, not the definition, and the SDT noted this in its responses.

Some commenters suggested the "station dc supply" portion of the definition be modified to specifically address battery chargers; the SDT modified the definition as suggested. The revised definition is shown below:

Protection System –

- Protective relays which respond to electrical quantities,
- Communications systems necessary for correct operation of protective functions,
- Voltage and current sensing devices providing inputs to protective relays,
- Station dc supply associated with protective functions (including station batteries, battery chargers, and non-battery-based dc supply), and
- Control circuitry associated with protective functions through the trip coil(s) of the circuit breakers or other interrupting devices.

The SDT did not make any other modifications to the definition and did not make any modifications to the implementation plan based on stakeholder comments submitted with ballots.

If you feel that the drafting team overlooked your comments, please let us know immediately. Our goal is to give every comment serious consideration in this process. If you feel there has been an error or omission, you can contact the Vice President and Director of Standards, Herb Schrayshuen, at 609-452-8060 or at herb.schrayshuen@nerc.net. In addition, there is a NERC Reliability Standards Appeals Process.[1]

[1] The appeals process is in the Reliability Standards Development Procedure: http://www.nerc.com/files/RSDP_V6_1_12Mar07.pdf.

Voter	Entity	Segment	Vote	Comment
Kirit S. Shah	Ameren Services	1	Negative	1. Remove “devices providing” yielding ‘voltage and current sensing inputs to protective relays’. This will match the SDT intent with which we concur. "The definition has been changed for clarity; the SDT intends that the output of these devices, measured at the relay should properly represent the primary quantities." 2. The 12 month implementation plan is an improvement, but will result in multiple maintenance plan changes within a short time. We believe that the implementation of the revised definition and PRC-005-2 PSMP must align on the same date.
Response: Thank you for your comments. 1. The definition of Protection System is for all applications of this term throughout NERC Standards. The detailed applicability of this element of the definition relative to maintenance within PRC-005-2 is addressed within the standard by specifying, “Verify that acceptable measurements of the current and voltage signals are received by the protective relays”. 2. When the Board of Trustees was asked to approve an interpretation of PRC-005-1 that was written by the PSMT SDT, the board acknowledged the reliability gap identified by the drafting team caused by the definition of "protection system" and directed that work to close this reliability gap should be given “priority.” To close this reliability gap the BOT has directed that revised definition be applied to PRC-005-1 as soon as practical - not years from now. The implementation plan now proposes at least 12 months for entities to apply the new definition to PRC-005-1, and that should give entities time to apply the new definition to PRC-005-1.				
Terri F Benoit	Entergy Services, Inc.	6	Negative	2007-17 the definition - Negative with Comments: The following are the reasons associated with our Negative Ballot. 1. We agree with the definition, however we do not agree with the implementation plan. We believe implementation of the definition needs to coincide with the implementation of Standard PRC-005-2. To do otherwise, will cause entities to address equipment, documentation, work management process, and employee training changes needed for compliance twice within an unreasonably short timeframe. 2. A 12 month minimum timeframe is need to implement this definition
Response: Thank you for your comments.				

Voter	Entity	Segment	Vote	Comment
1. When the Board of Trustees was asked to approve an interpretation of PRC-005-1 that was written by the PSMT SDT, the board acknowledged the reliability gap identified by the drafting team caused by the definition of "protection system" and directed that work to close this reliability gap should be given "priority." To close this reliability gap the BOT has directed that revised definition be applied to PRC-005-1 as soon as practical - not years from now. The implementation plan now proposes at least 12 months for entities to apply the new definition to PRC-005-1, and that should give entities time to apply the new definition to PRC-005-1. 2. The SDT modified the implementation plan to provide a 12-month implementation period with the previous posting.				
Brenda L Truhe	PPL Electric Utilities Corp.	1	Affirmative	Although PPL EU previously voted against this definition, due to the change in language, we now support this definition.
Response: Thank you for your comments.				
John C. Collins	Platte River Power Authority	1	Negative	Although the applicable relays to which protective relays are outlined in the NERC PRC-005-2 Protection system Maintenance Draft Supplementary Reference dated May 27, 2010, they are not defined in the NERC Glossary of terms. Until it is clearly defined which relays are included inconsistencies will exists from region to region in their audit approaches and which relays they will be looking at. Also, there is still debate why the protective relays would extend to mechanical devices such as the lock-out relay and tripping for trip-free relays. In our system configuration we risk reliability to customer load by testing the lock-out relays which we feel out weights the benefit of testing devices that we see little to no evidence of failure in.
Terry L Baker	Platte River Power Authority	3	Negative	
Response: Thank you for your comments. The definition of Protection System is for all applications of this term throughout NERC Standards. The detailed applicability of the definition relative to maintenance within PRC-005-2 is addressed within the standard. Your comments appear to be on the draft standard PRC-005-2, rather than on the definition. Failure of a lock-out relay or tripping relay can keep a circuit (or multiple circuits) from clearing a fault. Routine testing of these devices could find problems before the system needs them to clear a fault.				
Mel Jensen	APS	5	Negative	Although the SDT has made changes in trying to define the Protection System the definition remains too prescriptive. In particular, the devices providing current and voltage inputs as well as the dc supply. These items are also used for other functions not related to the reliability of the BES. They are critical to business and operation of the generating systems and not solely dedicated to protective relaying. Including them in the definition obligates the utility to methods where there should be some discretion.
Robert D Smith	Arizona Public Service Co.	1	Negative	

Voter	Entity	Segment	Vote	Comment
Response: Thank you for your comments. The SDT is aware that many devices have multiple functions within the business of supplying power to loads. Regardless of these other functions, if a device is a part of a Protection System then it must be maintained in accordance withPRC-005. The definition of Protection System is for all applications of this term throughout NERC Standards. The detailed applicability of the definition relative to maintenance within PRC-005-2 is addressed within the standard.				
Stan T. Rzad	Keys Energy Services	1	Negative	As written, is opens up the PRC-005 standard to Technical Feasibility Exceptions because some batteries are not able to accommodate all of the tests proscribed in the draft standard. The draft standard would cause NERC to regulate through the standards battery testing, DC circuit testing, etc. on distribution elements with no significant improvement to BES reliability, which is beyond the statutary scope of the standards The standard unreasonably retains the "100% compliance" paradigm for thousands, if not millions of protection system components.
Response: Thank you for your comments. Your comments appear to be relative to the draft standard PRC-005-2, rather than the definition. The SDT had not completed the consideration of comments on the standard when the definition was re-posted. The SDT has responded to similar comments within the responses to ballot comments and the consideration of comments on the standard itself.				
Joseph S. Stonecipher	Beaches Energy Services	1	Negative	Because the definition changes the scope of what PRC-005 covers, the definition should not be balloted separately from PRC-005 so that the industry knows what is being committed to. What happens if the standard is voted down but the definition change is passed? For instance, the circuitry connecting the voltage and current sensing devices to the relays is a scope expansion. Station DC supply increases the scope to include the charger, etc. This scope increase needs to have an appropriate implementation period.
Thomas W. Richards	Fort Pierce Utilities Authority	4	Negative	
Response: Thank you for your comments. When the Board of Trustees was asked to approve an interpretation of PRC-005-1 that was written by the PSMT SDT, the board acknowledged the reliability gap identified by the drafting team caused by the definition of "protection system" and directed that work to close this reliability gap should be given “priority.” To close this reliability gap the BOT has directed that revised definition be applied to PRC-005-1 as soon as practical - not years from now. The implementation plan now proposes at least 12 months for entities to apply the new definition to PRC-005-1, and that should give entities time to apply the new definition to PRC-005-1.				
Paul Rocha	CenterPoint Energy	1	Negative	CenterPoint Energy does not support any Protection System definition that includes the trip coils of the interrupting devices.
Response: Thank you for your comments. The current definition includes “DC Control Circuitry”; the SDT attempted to clarify the definition by stating which				

Voter	Entity	Segment	Vote	Comment
of the many control circuits are included. Because the current definition is vague, it can certainly include the trip coils, close coils, and alarm circuits of the interrupting device. The SDT believes that the electrically-operated trip coils are an important part of the control circuitry.				
Christopher L de Graffenried	Consolidated Edison Co. of New York	1	Negative	Comment: There is not enough clarity on whether a Distribution Provider (DP) will be able to clearly identify which protection system components it does own and needs to maintain. Many DPs own and/or operate equipment identified in the existing or proposed definition. However, not all such equipment translates into a transmission Protection System. The definition needs clarification on when such equipment is a part of the transmission protection system. Also, the time provided for the first phase "at least six months" is too open ended and does not provide entities with a clear timeline. It is suggested that one year is appropriate for the first phase phasing out the second year in stages.
Nickesha P Carrol	Consolidated Edison Co. of New York	6	Negative	
Response: Thank you for your comments. Your comments appear to be relative to the draft standard PRC-005-2, rather than the definition. The SDT had not completed consideration of comments on the standard when the definition was re-posted. The SDT has responded to similar comments within the responses to ballot comments and the consideration of comments on the standard itself. Regarding the comment that the definition needs to identify when equipment is part of the transmission system, this is properly an issue to address in the various standards that use this definition.				
Hugh A. Owen	Public Utility District No. 1 of Chelan County	6	Negative	Comments have convinced me that ambiguities in the requirements will make compliance/enforcement difficult and the testing procedures may not lead to greater reliability.
Response: Thank you for your comments. Your comments appear to be relative to the draft standard PRC-005-2, rather than the definition. The SDT had not completed the consideration of comments on the standard when the definition was re-posted. The SDT has responded to similar comments within the responses to ballot comments and the consideration of comments on the standard itself.				
Charles A. Freibert	Louisville Gas and Electric Co.	3	Affirmative	Comments will be submitte4d under the comment form
Response: Thank you for your comments. There was no formal comment period with the second ballot of the proposed definition.				

Voter	Entity	Segment	Vote	Comment
Ralph Frederick Meyer	Empire District Electric Co.	1	Negative	Comments: It is still unclear whether relays that respond to mechanical inputs, such as sudden pressure relays, are included in the proposed definition as protective relays. While PRC-005-2 R1 limits the scope of that particular standard to protection systems that sense electrical quantities, it is remains unclear in other standards that use the defined term whether mechanical input protections are included. We suggest that "Protective Relay" also be defined, and that the definition clearly exclude devices that respond to mechanical inputs in line with the NERC interpretation of PRC-005-1 in response to the CMPWG request.
Response: Thank you for your comments. The definition has been modified to include only protective relays that respond to electrical quantities. The SDT sees no need to either repeat or modify the IEEE definition of protective relays.				
Michael J. Haynes	Seattle City Light	5	Negative	Control circuitry associated with protective functions through the trip coil(s) of the circuit breakers or other interrupting devices. - In order to comply with this statement utilities would need to conduct functional tests of their relay system. This type of test is problematic. A better definition would be to test the output of the relay.
Response: Thank you for your comments. This component of the Protection System definition is to generally include this functionality as a part of the Protection System for all applications of the definition throughout NERC Standards. The detailed applicability of this component relative to maintenance within PRC-005-2 is addressed within the standard, which defines the maintenance required relative to control circuits. The SDT agrees that testing will be required in the standard itself.				
Jim D. Cyrulewski	JDRJC Associates	8	Negative	1. Definition needs to be more specific. Case in point if the drafting team wants to include battery chargers should state so. 2. Also implementation plan does not appear to be in synch with proposed changes.
Response: Thank you for your comments. 1. The current definition uses the term batteries in place of dc supply. The use of the term batteries was quite specific and as such excluded battery chargers. The definition has been modified to specifically include battery chargers. Battery chargers are now expected to be covered within the proposed definition and the term dc supply, so too are systems that do not use batteries and/or battery chargers. 2. When the Board of Trustees was asked to approve an interpretation of PRC-005-1 that was written by the PSMT SDT, the board acknowledged the reliability gap identified by the drafting team caused by the definition of "protection system" and directed that work to close this reliability gap should be given				

Voter	Entity	Segment	Vote	Comment
"priority." To close this reliability gap the BOT has directed that revised definition be applied to PRC-005-1 as soon as practical - not years from now. The implementation plan now proposes at least 12 months for entities to apply the new definition to PRC-005-1, and that should give entities time to apply the new definition to PRC-005-1.				
Daniel Brotzman	Commonwealth Edison Co.	1	Affirmative	Exelon suggests that the definition further clarify protective relays that are in scope by adding the following to the frequently asked questions: 1. "devices providing inputs to protective relays" - this is to clarify that testing for CTs and PTs will only ensure proper voltage and current into the relay - therefore not requiring CT and PT testing. 2. Elimination of "from the station dc supply" - the intent here is that the DC is testing only the trip functionality to ensure that certain relays actuate (e.g., 86 and 94 devices) and to ensure that breaker trip coils are exercised on a 6 year periodicity. Therefore, the ancillary wiring part of the controls will be on a longer periodicity (e.g., 12 years)
Response: Thank you for your comments. Your comments appear to be relative to the FAQs for PRC-005-2, rather than the definition. The SDT will consider these comments when it updates the FAQs.				
Robert Martinko	FirstEnergy Energy Delivery	1	Affirmative	FirstEnergy appreciates the hard work of the drafting team, but ask that the team consider the following suggestions: It is our understanding that the phrase "Station DC supply" in the definition is intended to cover the Battery, Battery Charger, and other DC supplies sources such as flywheels, fuel cells, and motor-generator sets. However, since the current Protection System Maintenance and Testing standard PRC-005-1 does not specify maintenance activities, as does the proposed Version 2 of PRC-005, it therefore does not provide compliance certainty related to mandatory expectations. This is because the current standard only requires that an entity develop a maintenance program and follows their program. Therefore, it is not clear from the definition that Battery Chargers must be included in the maintenance program developed per PRC-005-1. As we stated in our Initial Ballot comments, the phrase "Station DC supply" should be clarified. In response to our Initial Ballot comments the SDT stated "Clarifications such as this properly belong in supplementary materials. This is described in the FAQ posted in June 2010 (FAQ II.5.A)". We do not agree that supplementary materials should be relied upon to determine
Kevin Querry	FirstEnergy Solutions	3	Affirmative	
Kenneth Dresner	FirstEnergy Solutions	5	Affirmative	
Mark S Travaglianti	FirstEnergy Solutions	6	Affirmative	
Douglas Hohlbaugh	Ohio Edison Company	4	Affirmative	

Voter	Entity	Segment	Vote	Comment
				"what" is required and should only give you guidance on "how" to comply. The "what" should be described in the standard requirements and definitions.
Response: Thank you for your comments. It is the intent of the SDT that battery chargers and other devices that supply power to Protection System devices be included within the definition. As such, those devices have been included within the minimum maintenance activities of PRC-005-2. However, in the interim before PRC-005-2 is accepted, under the present PRC-005-1 an entity must have a maintenance program that includes the devices within the definition. PRC-005-1 does not prescribe the maintenance, only that the PSMP must include maintenance for the device. The definition has been modified to specifically include battery chargers.				
Pawel Krupa	Seattle City Light	1	Negative	Functional testing is impractical.
Dana Wheelock	Seattle City Light	3	Negative	
Hao Li	Seattle City Light	4	Negative	
Response: Thank you for your comments. The definition of Protection System is for all applications of this term throughout NERC Standards. The detailed applicability of this element relative to maintenance within PRC-005-2 is addressed within the standard, which defines the maintenance required relative to control circuits. Your comments appear to be relative to the draft standard PRC-005-2, rather than the definition. The SDT had not completed the consideration of comments on the standard when the definition was re-posted. The SDT has responded to similar comments within the responses to ballot comments and the consideration of comments on the standard itself. The SDT agrees that testing will be required in the standard itself.				
Dennis Sismaet	Seattle City Light	6	Negative	Functional testing is impractical. Control circuitry associated with protective functions through the trip coil(s) of the circuit breakers or other interrupting devices. - " In order to comply with this statement utilities would need to functional test their relay system. A better definition would be to test the output of the relay"
Response: Thank you for your comments. The definition of Protection System is for all applications of this term throughout NERC Standards. The detailed applicability of this element relative to maintenance within PRC-005-2 is addressed within the standard, which defines the maintenance required relative to control circuits. Your comments appear to be relative to the draft standard PRC-005-2, rather than the definition. The SDT had not completed the consideration of comments on the standard when the definition was re-posted. The SDT has responded to similar comments within the responses to ballot comments and the consideration of comments on the standard itself. The SDT agrees that testing will be required in the standard itself.				
Mark Ringhausen	Old Dominion Electric Coop.	4	Affirmative	I am voting Yes on the ballot, but I do have a small issue with the wording of 'station DC supply'. In some of our UFLS locations, we are not in a substation, but out on the feeder circuit and utilizing the DC supply on the feeder recloser. I think my reading of this definition would apply to this recloser DC supply as well as the

Voter	Entity	Segment	Vote	Comment
				Station DC Supply.
Response: Thank you for your comments. Your concern is appreciated. A review of the standard itself shows that the dc supply maintenance activities are minimal related to UFLS.				
Jeff Mead	City of Grand Island	5	Negative	I echo MRO NSRS comments.
Response: Thank you for your comments. The station dc supply element has been modified essentially as you suggest. As to your suggestion regarding inclusion of "BES' within the definition – this is properly an issue to address in the various standards that use this definition.				
John Yale	Chelan County Public Utility District #1	5	Negative	If the new definition is: The new proposed definition of Protection System reads as follows: Protection System: o Protective relays which respond to electrical quantities, o Communications systems necessary for correct operation of protective functions, o Voltage and current sensing devices providing inputs to protective relays, o Station dc supply, and o Control circuitry associated with protective functions through the trip coil(s) of the circuit breakers or other interrupting devices. In this list format, it appears it is the entire station dc supply not just that portion and circuitry associated with the protective circuits. This is an unreasonable burden as many parts of the station dc supply are used for non-protective functions.
Response: Thank you for your comments. The SDT has modified the definition in consideration of your comments. That bullet now reads: station dc supply associated with protective functions (including station batteries, battery chargers, and non-battery-based dc supply)				
Joseph O'Brien	Northern Indiana Public Service Co.	6	Negative	1. It is still not clear whether battery chargers fall under this definition. 2. The implementation plan should be coordinated with the new PRC-005-2, not -1. 3. It's not clear if a breaker trip has to be actuated to test/maintain the control circuitry through the trip coils.

Voter	Entity	Segment	Vote	Comment
Response: Thank you for your comments. 1. The definition has been modified to specifically include battery chargers. 2. When the Board of Trustees was asked to approve an interpretation of PRC-005-1 that was written by the PSMT SDT, the board acknowledged the reliability gap identified by the drafting team caused by the definition of "protection system" and directed that work to close this reliability gap should be given "priority." To close this reliability gap the BOT has directed that revised definition be applied to PRC-005-1 as soon as practical - not years from now. The implementation plan now proposes at least 12 months for entities to apply the new definition to PRC-005-1, and that should give entities time to apply the new definition to PRC-005-1. 3. The draft standard PRC-005-2 includes the minimum maintenance activities. Until PRC-005-2 is approved, you need to define the activities and provide a basis for those activities in accordance with PRC-005-1.				
Thomas E Washburn	Florida Municipal Power Pool	6	Negative	It is still unclear whether relays that respond to mechanical inputs, such as sudden pressure relays, are included in the proposed definition as protective relays. While PRC-005-2 R1 limits the scope of that particular standard to protection systems that sense electrical quantities, it is remains unclear in other standards that use the defined term whether mechanical input protections are included. We suggest that "Protective Relay" also be defined, and that the definition clearly exclude devices that respond to mechanical inputs in line with the NERC interpretation of PRC-005-1 in response to the CMPWG request
Response: Thank you for your comments. The definition has been modified to include only protective relays that respond to electrical quantities. The SDT sees no need to either repeat or modify the IEEE definition of protective relays.				
Frank Gaffney	Florida Municipal Power Agency	4	Affirmative	It is unclear in the Implementation Plan if the expectation is to complete the first maintenance and testing cycle, or whether the entities need to be auditably compliant within the one year implementation plan, e.g., prove that they have performed maintenance and testing within the interval defined in the maintenance and testing program of R1, which essentially could mean two maintenances and tests of the same component during the first year for the components identified in the expansion of scope of the definition of Protection System (e.g., battery charger). We encourage the SDT to make this crystal clear, i.e.,, is only the first maintenance and test needed as long as the end of the maintenance and testing interval identified in the maintenance
David Schumann	Florida Municipal Power Agency	5	Affirmative	
Richard L. Montgomery	Florida Municipal Power Agency	6	Affirmative	
Bob C. Thomas	Illinois Municipal Electric Agency	4	Affirmative	

Voter	Entity	Segment	Vote	Comment
				and testing program of R1 has not been reached yet, or are two maintenance and tests needed to be auditably compliant?
Response: Thank you for your comments. The SDT observes that the implementation plan for the definition requires that the entity implement the revised program. The implementation plan also requires completion of maintenance within one full cycle of the revised program.				
Martin Bauer P.E.	U.S. Bureau of Reclamation	5	Negative	1. It is unfortunate that the definition did not retain consistency in the terms. As an example, the definition indicates it includes protective relays and communication systems for the correct operation of protective functions. It would have been better to use the term relays instead of the term functions. 2. Now it is unclear what the communication systems are for, since a different term was used rather than protective relays. Since it is not clear what the communications have to do with protective relays, as it may also include those that do not just respond to electrical quantities, the definition cannot be used to support the standard. 3. The change to insert the term "devices providing" when referring to voltage and current sensing unfortunately eliminates the circuitry form the voltage and current sensing devices to the relays. This was caused by inserting the word “devices”. I do not believe it was the SDT intent, however, we are in a literal word world. Since we are primarily focused on the performance of the device as a function of the burden on the device, I cannot vote in favor. My company believes the circuit from the PT and CT must be a part of the Protection System and is arguably of greater concern. Consider that if a PT or CT fails partially or completely it will be known immediately. Maintenance practices will rarely help that predict failure. On the other hand, the circuitry from the voltage and current sensing devices can have a problem that will affect relay performance through instrument transformer error and in most cases is only found through testing. Had you changed “devices” to “circuits” I would agree with providing the first issue addressed as well. The term

Voter	Entity	Segment	Vote	Comment
				"circuits" could have included both (devices and circuits), but as I explained, the latter is more important, more variable, and has been attributed to many protection system failures.
Response: Thank you for your comments. 1. "Protective relays which respond to electrical quantities" is a description intended to clarify which relays are excluded (those not responding to electrical quantities are excluded). However a different descriptor was aimed at communications devices; after all there are many communication circuits employed that are not used for protective functions (voice, alarm data, revenue data, etc.). 2. The term "communications systems necessary for correct operation of protective functions" was chosen to include all methods of conveying tripping, permissive and blocking signals that are used now or may be used in the future. The SDT saw no need to include language that might result in the inclusion of voice equipment. 3. The change to insert the term "devices providing" was to improve clarity while also excluding voltage and current measuring devices that provide data exclusively to metering equipment as opposed to Protection Systems. The SDT agrees with the commenter that an appropriate maintenance activity is to ensure that the measured voltage and current values correctly make it to the relays. The maintenance activity is a part of the standard. The absence of this activity from the definition is not intended to lead one to believe that the activity is not important.				
John J. Moraski	Baltimore Gas & Electric Company	1	Negative	It seems not to be the intention of the SDT to require testing of CT's and PT's beyond verifying that they that are delivering acceptable signals to relays. Table 1 a of the standard includes: - Voltage & Current Sensing Devices / 12 Calendar Years / Verify proper functioning of the current and voltage circuit inputs from the voltage and current sensing devices to the protective relays. The FAQ's are even clearer and say: ********** 3. Voltage and Current Sensing Device Inputs to Protective Relays A. What is meant by "…verify the current and voltage circuit inputs from the voltage and current sensing devices to the protective relays …" Do we need to perform ratio, polarity and saturation tests every few

Voter	Entity	Segment	Vote	Comment
Amir Y Hammad	Constellation Power Source Generation, Inc.	5	Negative	years? No. You must prove that the protective relay is receiving the expected values from the voltage and current sensing devices (typically voltage and current transformers). This can be as difficult as is proposed by the question (with additional testing on the cabling and substation wiring to ensure that the values arrive at the relays); or simplicity can be achieved by other verification methods. Some examples follow: - Compare the secondary values, at the relay, to a metering circuit, fed by different current transformers, monitoring the same line as the questioned relay circuit. - Compare the values, as determined by the questioned relay, to another protective relay monitoring the same line, with currents supplied by different CTs. - Query SCADA for the power flows at the far end of the line protected by the questioned relay, compare those SCADA values to the values as determined by the questioned relay. - Totalize the Watts and VARs on the bus and compare the totals to the values as seen by the questioned relay. The point of the verification procedure is to ensure that all of the individual components are functioning properly; and that, an ongoing proactive procedure is in place to re-check the various components of the protective relay measuring systems. ********** But the neither the originally revised or newly revised definitions carry that implication very well. Suppose the phrase in the definition were changed from: “Voltage and current sensing devices providing inputs to protective relays” to; “Voltage and current sensing device output circuits and the associated circuits to the inputs of protective relays”. This would make the whole definition read: Protection System: Protective relays which respond to electrical quantities, communication systems necessary for correct operation of protective functions, voltage and current sensing device output circuits and the associated circuits to the inputs of protective relays, station dc supply, and control circuitry associated with protective functions through the trip coil(s) of the circuit breakers or other interrupting devices.
Response: Thank you for your comments. Your comments appear to be relative to the draft standard PRC-005-2, rather than the definition. The SDT had not completed the consideration of comments on the standard when the definition was re-posted. The SDT has responded to similar comments within the				

Voter	Entity	Segment	Vote	Comment
responses to ballot comments and the consideration of comments on the standard itself. You have put together a complete discussion of the fact that there is more to a system than merely 5 listed devices.				
Garry Baker	JEA	3	Negative	JEA believes the change in the definition should coordinate with the new standard PRC-005-002.
Response: Thank you for your comments. When the Board of Trustees was asked to approve an interpretation of PRC-005-1 that was written by the PSMT SDT, the board acknowledged the reliability gap identified by the drafting team caused by the definition of "protection system" and directed that work to close this reliability gap should be given "priority." To close this reliability gap the BOT has directed that revised definition be applied to PRC-005-1 as soon as practical - not years from now. The implementation plan now proposes at least 12 months for entities to apply the new definition to PRC-005-1, and that should give entities time to apply the new definition to PRC-005-1.				
William Mitchell Chamberlain	California Energy Commission	9	Negative	Lack of clarity or apparent conflict between certain requirements would make compliance assessment difficult.
Response: Thank you for your comments. Your comments appear to be relative to the draft standard PRC-005-2, rather than the definition. The SDT had not completed the consideration of comments on the standard when the definition was re-posted. The SDT has responded to similar comments within the responses to ballot comments and the consideration of comments on the standard itself.				
Bruce Merrill	Lincoln Electric System	3	Negative	LES would like to thank the Drafting Team for its time and effort in developing the definition. However, at this time LES believes that the implementation plan for the definition should be directly linked to the approval and implementation schedule for PRC-005-2 and the proposed definition of Protection System is incomplete as written and remains open to interpretation. LES offers the following Protection System definition for the SDT's consideration: "Protection System" is defined as: A system that uses measurements of voltage, current, frequency and/or phase angle to determine anomalies and trips a portion of the BES and consists of 1) Protective relays, and associated auxiliary relays, that initiate trip signals to trip coils, 2) associated communications channels, 3) current and voltage transformers supplying protective relay inputs, 4) dc station supply, excluding battery chargers, and 5) dc control trip path circuitry to the trip coils of BES connected breakers, or equivalent interrupting device, and lockout relays.
Dennis Florom	Lincoln Electric System	5	Negative	
Eric Ruskamp	Lincoln Electric System	6	Negative	
Response: Thank you for your comments. When the Board of Trustees was asked to approve an interpretation of PRC-005-1 that was written by the PSMT SDT, the board acknowledged the reliability gap identified by the drafting team caused by the definition of "protection system" and directed that work to close				

Voter	Entity	Segment	Vote	Comment
this reliability gap should be given "priority." To close this reliability gap the BOT has directed that revised definition be applied to PRC-005-1 as soon as practical - not years from now. The implementation plan now proposes at least 12 months for entities to apply the new definition to PRC-005-1, and that should give entities time to apply the new definition to PRC-005-1. The SDT disagrees with several aspects of your suggested changes: Auxiliary relays are not a protective relay, but are instead a part of the dc control circuit; "associated" communication systems is too vague to address existing concerns with the definition; battery chargers specifically should NOT be excluded; and "to the trip coils" does not include trip coils as intended by the SDT. The SDT has made changes to the definition which may address other parts of your comment				
Robert Ganley	Long Island Power Authority	1	Affirmative	LIPA offers the following definition which we feel is clearer: Protective relays which respond to electrical quantities, communication systems required for operation of protective functions, voltage and current sensing devices to protective relays, station dc supply, and control circuitry from the associated protective functions through the trip coil(s) of the circuit breakers or other interrupting devices.
Response: Thank you for your comments. The SDT has adopted your suggestion regarding Protective Relays.				
Saurabh Saksena	National Grid	1	Affirmative	National Grid suggests adding "Protection System Components including" in the beginning. This is because the word "components" has been used extensively throughout the standard and there is no mention of what constitutes a protection system component in the standard. The word "component" does find mention in FAQs, however, it is recommended to mention it in the main standard. Also, National Grid proposes a change in the proposed definition (changing "voltage and current sensing inputs" to "voltage and current sensing devices providing inputs"). The revised definition should read as follows: Protective System Components including Protective relays, communication systems necessary for correct operation of protective functions, voltage and current sensing devices providing inputs to protective relays and associated circuitry from the voltage and current sensing devices, station dc supply, and control circuitry associated with protective functions from the station dc supply through the trip coil(s) of the circuit breakers or other interrupting devices. The time provided for the first phase "at least six months" is too open ended and does not give entities a clear timeline. National Grid

Voter	Entity	Segment	Vote	Comment
				suggests 1 year for the first phase. As a result, National Grid suggests phasing out the second phase in stages.
Response: Thank you for your comments. The SDT believes that inclusion of the defined term within its own definition is not appropriate, and declines to adopt your suggestion regarding the definition. The Implementation Plan and definition have both been modified in a manner that supports your comments.				
Liam Noailles	Xcel Energy, Inc.	5	Negative	NERC has indicated that this definition is being processed to close a reliability gap. It is not clear as to what gap this proposed definition is closing. The use of the term "Station DC Supply" actually introduces more confusion since some entities may view this as only batteries, and not include chargers. It would appear that the intent is to ensure that during a loss of substation service power scenario that the source of power (whatever that may be) to the Protection System is available and able to perform as designed. Recommend the definition be re-written to make it clear as to what components related to this assured source of power are required to be maintained as part of the Protection System, or alternatively define "Station DC Supply".
David F. Lemmons	Xcel Energy, Inc.	6	Negative	
Response: Thank you for your comments. The definition has been modified to specifically include battery chargers.				
David H. Boguslawski	Northeast Utilities	1	Negative	NU believes that a protection system includes: 1) Protective relays which respond to electrical quantities, 2) Communications systems necessary for correct operation of protective functions, 3) Voltage and current sensing devices providing inputs to protective relays", and associated circuitry from the voltage and current sensing devices" 4) Station dc supply, and 5) Control circuitry associated with protective functions through the trip coil(s) of the circuit breakers or other interrupting devices The proposed definition excludes "and associated circuitry from the voltage and current sensing devices" from item 3. NU believes that the associated circuitry for voltage and current sensing devices should be included. It is our concern that the proposed definition implies PRC-005 will apply specifically to the voltage and current sensing devices and not include the AC circuitry between these devices and the relay inputs.
Response: Thank you for your comments. The words of the definition were chosen to help clarify and exclude devices used exclusively for non-protective functions (metering, etc.), while the maintenance standard itself has a minimum maintenance activity that seeks to demonstrate the importance of the entire				

Voter	Entity	Segment	Vote	Comment
scheme.				
Chifong L. Thomas	Pacific Gas and Electric Company	1	Affirmative	PG&E believes the definition should identify that the protection system is associated with direct BES electrical quantities with the intention of protecting the BES from any device from propagating a problem in one part of the BES to another. The definition should not include associated systems, i.e. auxiliary systems including their transformers, motors, etc. For generating stations the protection included should only be the generator itself and its associated main bank transformer that delivers the power to the system. Likewise, for distribution substations, the protection should only include equipment such as the main transformer that draws power from the BES and not equipment such as distribution feeders.
Response: Thank you for your comments.				
James D. Hebson	PSEG Energy Resources & Trade LLC	6	Affirmative	Please reference comments submitted by the PSEG companies on the official comment form for this standard.
Response: Thank you for your comments. For this second ballot, there was no formal comment period.				
Rebecca Berdahl	Bonneville Power Administration	3	Negative	Please see BPA's comments submitted during the concurrent formal comment period ending July 16, 2010.
Response: Thank you for your comments. The SDT changed the definition following the formal comment period that ended July 16, 2010.				
Mark A Heimbach	PPL Generation LLC	5	Negative	Please see comments submitted by "PPL Supply" on 7/16/10.
Response: Thank you for your comments. The SDT changed the definition following the formal comment period that ended July 16, 2010.				
Laurie Williams	Public Service Company of New Mexico	1	Negative	PNM rejects this definition as too broad and not consistent with the way utilities treat the various items in the definition, but agrees with the proposed changes to the implementation plan.
Response: Thank you for your comments. Absent specific comments on the definition, the SDT is unable to respond to your concerns.				

Voter	Entity	Segment	Vote	Comment
Wayne Lewis	Progress Energy Carolinas	5	Affirmative	Progress Energy does not believe that the definition should be implemented separately from and prior to the implementation of PRC-005-2. We believe there should be a direct linkage between the definition's effective date to the approval and implementation schedule of PRC-005-2. Since this new definition should be directly linked to the proposed revised standard, it would be premature to make this new definition effective prior to the effective date of the new standard. We believe that changes to the maintenance program should be driven by the revision of the PRC standard, not by the revision of a definition.
Response: Thank you for your comments. When the Board of Trustees was asked to approve an interpretation of PRC-005-1 that was written by the PSMT SDT, the board acknowledged the reliability gap identified by the drafting team caused by the definition of "protection system" and directed that work to close this reliability gap should be given "priority." To close this reliability gap the BOT has directed that revised definition be applied to PRC-005-1 as soon as practical - not years from now. The implementation plan now proposes at least 12 months for entities to apply the new definition to PRC-005-1, and that should give entities time to apply the new definition to PRC-005-1.				
Kenneth D. Brown	Public Service Electric and Gas Co.	1	Affirmative	PSE&G is now voting affirmative. Thanks to the drafting team for improving the clarity of the definition.
Response: Thank you for your comments.				
Dan R. Schoenecker	Midwest Reliability Organization	10	Negative	Revise Protection System definition to: o BES Protective relays which respond to electrical quantities, o Communications systems necessary for correct operation of the BES protective functions, o Voltage and current sensing devices providing inputs to BES protective relays, o Battery and battery chargers that supply dc to BES protective relays, communications, and control circuitry, and o Control circuitry associated with the BES protective functions through the trip coil(s) of the circuit breakers or other interrupting devices.
Response: Thank you for your comments. The station dc supply component type has been modified essentially as you suggest. As to your suggestion regarding inclusion of "BES' within the definition – this is properly an issue to address in the various standards that use this definition.				

Voter	Entity	Segment	Vote	Comment
Thomas C. Mielnik	MidAmerican Energy Co.	3	Negative	Revise Protection System definition to: BES Protective relays which respond to electrical quantities, Communications systems necessary for correct operation of the BES protective functions, Voltage and current sensing devices providing inputs to BES protective relays, Battery and battery chargers that supply dc to BES protective relays, communications, and control circuitry, and Control circuitry associated with the BES protective functions through the trip coil(s) of the circuit breakers or other interrupting devices.
Response: Thank you for your comments. The station dc supply component type has been modified essentially as you suggest. As to your suggestion regarding inclusion of "BES' within the definition – this is properly an issue to address in the various standards that use this definition.				
Brian Evans-Mongeon	Utility Services, Inc.	8	Negative	see filed comments
Response: Thank you for your comments. The SDT changed the definition following the formal comment period that ended July 16, 2010; there was no formal comment period during the second ballot of the proposed definition.				
Glen Reeves	Salt River Project	5	Affirmative	SRP believes the requirements of the Standard are confusing and may be problematic in determining compliance. We also believe the required functional testing of the breaker trip coil may potentially increase maintenance outages of circuit breakers. In most cases, circuit breaker maintenance outages can be coordinated such that Protection System maintenance and testing can be done simultaneously. However, in some cases this may not be possible. Outages of any BES facility whether planned or unplanned can impact system reliability. SRP suggests that trip coil monitoring devices be included as an acceptable means of ensuring the trip coil is functioning properly. This will help to avoid unnecessary outages.
Response: Thank you for your comments. Your comments appear to be relative to the draft standard PRC-005-2, rather than the definition. The SDT had not completed the consideration of comments on the standard when the definition was re-posted. The SDT provides the following response, in accordance with the responses to comments on the standard itself.				
James V. Petrella	Atlantic City Electric Company	3	Affirmative	Suggested improvement: add "and associated circuitry" to "Voltage and current sensing devices and associated circuitry providing inputs to protective relays".

Voter	Entity	Segment	Vote	Comment
Response: Thank you for your comments. Many other commenters have previously expressed concern with the definition as you suggest, and the SDT believes that the definition as currently posted best expresses this portion of the definition.				
Thomas R. Glock	Arizona Public Service Co.	3	Negative	The change to the definition relative to the voltage and current sensing devices is too prescriptive. Methods of determining the integrity of the voltage and current inputs into the relays to ensure reliability of the devices should be up to the discretion of the utility.
Response: Thank you for your comments. Absent any specific comment regarding how the definition is too prescriptive, the SDT is unable to respond to your concerns. Your comments appear to be relative to the draft standard PRC-005-2, rather than the definition. The SDT had not completed the consideration of comments on the standard when the definition was re-posted. The SDT has responded to similar comments within the responses to ballot comments and the consideration of comments on the standard itself.				
William D Shultz	Southern Company Generation	5	Negative	The definition alone is acceptable, but the existing version of PRC-005 does not guarantee any additional maintenance or testing will occur with its ratification. Maintenance methodology documents will have to be revised to include the new definition, but entities may still dictate limited maintenance activities and lengthy intervals which require no additional maintenance to be done. The PRC-005-2 version of the standard includes this revised definition and requires specific maintenance activities at specific intervals. Establishing only a new definition does not close the perceived reliability gap that is the basis for the current vote. The new definition needs to be ratified along with the revised standard.
Response: Thank you for your comments. When the Board of Trustees was asked to approve an interpretation of PRC-005-1 that was written by the PSMT SDT, the board acknowledged the reliability gap identified by the drafting team caused by the definition of "protection system" and directed that work to close this reliability gap should be given “priority.” To close this reliability gap the BOT has directed that revised definition be applied to PRC-005-1 as soon as practical - not years from now. The implementation plan now proposes at least 12 months for entities to apply the new definition to PRC-005-1, and that should give entities time to apply the new definition to PRC-005-1.				
Raj Rana	American Electric Power	3	Negative	The definition as drafted includes "Station dc supply." While this appears reasonable and innocuous, the term is unclear and could be construed by an auditor to include a lot of equipment and infrastructure not intended by the PSMT SDT. For example, station battery chargers are typically supplied by station auxiliary power transformers, which in turn are supplied by primary-voltage bus work, primary-voltage fuses, or primary-voltage circuit breakers.

Voter	Entity	Segment	Vote	Comment
				An auditor for either PRC-005 or any other Standard referencing "Protection System" could read that such primary-voltage equipment is part of the Protection System and therefore subject to certain requirements in either PRC-005 or any other Standard referencing Protection System. The definition as drafted includes "Communications systems necessary. . . ". Once again, this term appears innocuous, but it is actually unclear. For example, if a transfer-trip channel is carried on a microwave path, an auditor may decide that the entire microwave equipment, microwave building battery, and microwave building emergency generator are all part of the Protection System, and thus subject to requirements in either PRC-005 or other existing or future Standards that refer to Protection System. AEP recommends that the term be phrased "communications paths" opposed to "communications systems". Similar to the above two items, we are concerned about the inclusion of voltage and current-sensing "devices" in the Definition. As written, applicability can be inferred to the entire device and not merely its output quantities, not only for this Standard but any other that references a Protection System. AEP recommends the phrase "circuitry from voltage and current-sensing devices providing inputs to protective relays" instead of "voltage and current-sensing devices providing inputs to protective relays"
Response: Thank you for your comments. The definition has been modified to specifically include battery chargers. As to your other comments, it appears that your comments apply more to the application of the definition within PRC-005-1 or PRC-005-2 than they do to the definition itself. Within the reference materials associated with PRC-005-2, the SDT advises that equipment associated with microwave systems is part of the communications system. The SDT believes that the proposed definition is less vague than the current definition on the issues you cite, and would improve the situation that you discuss from the current level.				
Michael Moltane	International Transmission Company Holdings Corp	1	Negative	The definition contained in this ballot really needs to be part and parcel of the PRC-005-2 Standard Ballot, since the definition has such a huge impact on the standard itself. It is problematic to vote on a definition and on the standard independent of one another. Therefore, ITC must vote negative on this Ballot.
Response: Thank you for your comments. When the Board of Trustees was asked to approve an interpretation of PRC-005-1 that was written by the PSMT SDT, the board acknowledged the reliability gap identified by the drafting team caused by the definition of "protection system" and directed that work to close this reliability gap should be given “priority.” To close this reliability gap the BOT has directed that revised definition be applied to PRC-005-1 as soon as practical				

Voter	Entity	Segment	Vote	Comment
- not years from now. The implementation plan now proposes at least 12 months for entities to apply the new definition to PRC-005-1, and that should give entities time to apply the new definition to PRC-005-1.				
Michael Schiavone	Niagara Mohawk (National Grid Company)	3	Affirmative	The definition could be worded better
Response: Thank you for your comments. The SDT has modified the definition for improved clarity.				
Kenneth Parker	Entegra Power Group, LLC	5	Negative	The definition infers testing of CTs and PTs which should not be necessary.
Response: Thank you for your comments. The definition of Protection System is for all applications of this term throughout NERC Standards. The detailed applicability of this element of the definition relative to maintenance within PRC-005-2 is addressed within the standard by specifying, "Verify that acceptable measurements of the current and voltage signals are received by the protective relays".				
Christopher Plante	Integrys Energy Group, Inc.	4	Negative	1. The definition should state what is meant by "station dc supply". There continues to be questions in the industry regarding if dc supply includes the battery charger. We believe the charger is not included in station dc supply and that the Definition of Protection System should specifically address the point. 2. Also, the definition should specify BES relays, BES protection functions and elements associated with BES relays and functions.
Response: Thank you for your comments. 1. The definition has been modified to specifically include battery chargers. 2. This is properly an issue to address in the various standards that use this definition.				
Terry Harbour	MidAmerican Energy Co.	1	Negative	The following changes should be incorporated in the definition to insure it is used consistently in PRC-005 and any other standards where it appears. Revise Protection System definition to: o BES Protective relays which respond to electrical quantities, o Communications systems necessary for correct operation of the BES protective functions, o Voltage and current sensing devices providing inputs to BES protective relays, o Battery and battery chargers that supply dc to BES protective relays, communications, and control circuitry, and Control circuitry associated with the BES

Voter	Entity	Segment	Vote	Comment
				protective functions through the trip coil(s) of the circuit breakers or other interrupting devices.
Response: Thank you for your comments. The station dc supply component type has been modified essentially as you suggest. As to your suggestion regarding inclusion of "BES' within the definition – this is properly an issue to address in the various standards that use this definition.				
Robert W. Roddy	Dairyland Power Coop.	1	Negative	The implementation of the revised definition should not take place until the revised standard PRC-005-2 is in effect.
Response: Thank you for your comments. When the Board of Trustees was asked to approve an interpretation of PRC-005-1 that was written by the PSMT SDT, the board acknowledged the reliability gap identified by the drafting team caused by the definition of "protection system" and directed that work to close this reliability gap should be given "priority." To close this reliability gap the BOT has directed that revised definition be applied to PRC-005-1 as soon as practical - not years from now. The implementation plan now proposes at least 12 months for entities to apply the new definition to PRC-005-1, and that should give entities time to apply the new definition to PRC-005-1.				
John Tolo	Tucson Electric Power Co.	1	Negative	The mention of communication systems maintenance (M1.) needs more clarity as to the depth of the maintenance required. Also, Table 1a, a 3-month interval to verify that the Protection System communications system is functional is too frequent to be practical.
Response: Thank you for your comments. Your comments do not seem relevant to the definition, but instead appear to be related directly to the revisions to the draft PRC-005-2 itself. The SDT had not completed consideration of comments on the standard when the definition was re-posted. The SDT provides the following response, in accordance with the responses to comments on the standard itself.				
Scott Kinney	Avista Corp.	1	Negative	The modified definition of Protection System now refers to "functions" rather than "devices." What are the "functions?" This new term adds confusion without being defined in the standard.
Response: Thank you for your comments. The reference to "functions" is intended to reflect that there is increasing use, particularly in SPS, of devices which mimic protective relays but are not actually traditional relays.				
Michael Gammon	Kansas City Power & Light Co.	1	Negative	The proposed changes in the Standard are far too prescriptive and do not take into account the multitude of manufacturers

Voter	Entity	Segment	Vote	Comment
Charles Locke	Kansas City Power & Light Co.	3	Negative	equipment by establishing broad maintenance cycles and testing intervals.
Scott Heidtbrink	Kansas City Power & Light Co.	5	Negative	
Thomas Saitta	Kansas City Power & Light Co.	6	Negative	
Response: Thank you for your comments. Your comments appear to be relative to the draft standard PRC-005-2, rather than the definition. In Order 693, the FERC directed that NERC establish maximum allowable intervals for maintenance of protection systems.				
Jack Stamper	Clark Public Utilities	1	Negative	The proposed definition does not provide the level of clarity that is needed.
Response: Thank you for your comments. The SDT has modified the definition for improved clarity.				
Ajay Garg	Hydro One Networks, Inc.	1	Affirmative	The proposed definition of Protection System needs clarification on when such equipment is a part of the transmission protection system. Emphasis should be on systems and not individual components.
Response: Thank you for your comments. This issue is better addressed in the various standards that use the definition.				
Mace Hunter	Lakeland Electric	3	Affirmative	The proposed draft may introduce TFEs into the PRC standards, not a good thing. The proposed draft reaches beyond the statutory scope of the reliability standards. Perfection is not a realistic goal.
Response: Thank you for your comments. The SDT has modified the definition for improved clarity.				
Kim Warren	Independent Electricity System Operator	2	Affirmative	The proposed revision to the definition has removed the "associated circuitry from the voltage and current sensing devices" which we believe should be included since failure of this wiring will render the Protection System inoperative. On this basis we recommend the following change to once again include this circuitry in the definition: “Protective relays which respond to electrical quantities, communication systems necessary for correct operation of protective functions, voltage and current sensing devices AND ASSOCIATED CIRCUITRY [emphasis added] providing inputs to protective relays, station dc supply, and control circuitry

Voter	Entity	Segment	Vote	Comment
				associated with protective functions through the trip coil(s) of the circuit breakers or other interrupting devices."
Response: Thank you for your comments. The change to insert the term "devices providing" was to improve clarity while also excluding voltage and current measuring devices that provide data exclusively to metering equipment as opposed to Protection Systems. The SDT agrees with the commenter that an appropriate maintenance activity is to ensure that the measured voltage and current values correctly make it to the relays. The maintenance activity is a part of the standard. The absence of this activity from the definition is not intended to lead one to believe that the activity is not important.				
Roger C Zaklukiewicz		8	Negative	The proposed rewording of the definition implies that the wiring from the current transformers and voltage transformers to the protective relay systems are independent of the protection system being tested and that separate maintenance standards will have to be established to test the integrity of the wiring and the Potential device and current transformer. The definition of the Protection System should not exclude the wiring and devices which generate the current and voltage sources to the protective relays.
Response: Thank you for your comments. The change to insert the term "devices providing" was to improve clarity while also excluding voltage and current measuring devices that provide data exclusively to metering equipment as opposed to Protection Systems. The SDT agrees with the commenter that an appropriate maintenance activity is to ensure that the measured voltage and current values correctly make it to the relays. The maintenance activity is a part of the standard. The absence of this activity from the definition is not intended to lead one to believe that the activity is not important.				
Jim R Stanton	SPS Consulting Group Inc.	8	Negative	The reference to "communication systems" should be deleted from the definition. It is confusing to Registered Entities who do not consider the circuits that connect components of a protection system to be a communication "system" such as a telephone system, postal service or computer network which is more properly called a communication system. Suggest changing it to "signal carrying circuitry."
Response: Thank you for your comments. The SDT believes that "Communication Systems" is a term that is generally well understood within the industry.				

Voter	Entity	Segment	Vote	Comment
Brock Ondayko	AEP Service Corp.	5	Negative	The term "station" should either be defined or removed from the definition, as it implies transmission and distribution assets while the term "plant" is used to define generation assets. It would suffice to simply refer to the "DC Supply". As written, the implementation plan only specifies a time frame for entities to update their documentation for PRC-005-1 and PRC-005-2 compliance. The implementation plan also needs to give entities a time frame to address any required changes to their documentation for other standards that use the term "Protection System", including but not limited to NUC-001-2, PER-005-1, PRC-001-1, etc.
Response: Thank you for your comments. The term 'station' was used because it could include both a substation and a generation station while at the same time excluded installations that were strictly communications repeater sites. As noted on the "Assessment of Impact of Proposed Modification to the Definition of "Protection System" which was posted with the first comment period, the SDT believes that the bulk of the implementation of the new definition will be regarding PRC-005 (generically) and that there will be very little implementation associated with the other standards that utilize this term.				
Paul B. Johnson	American Electric Power	1	Negative	1. The term "station" should either be defined or removed from the definition, as it implies transmission and distribution assets while the term "plant" is used to define generation assets. It would suffice to simply refer to the "DC Supply". As written, the implementation plan only specifies a time frame for entities to update their documentation for PRC-005-1 and PRC-005-2 compliance. The implementation plan also needs to give entities a time frame to address any required changes to their documentation for other standards that use the term "Protection System", including but not limited to NUC-001-2, PER-005-1, PRC-001-1, etc. we still support a "negative" ballot with the following comments: 2. The definition as drafted includes "Station dc supply." While this appears reasonable and innocuous, the term is unclear and could be construed by an auditor to include a lot of equipment and infrastructure not intended by the PSMT SDT. For example, station battery chargers are typically supplied by station auxiliary power transformers, which in turn are supplied by primary-voltage buswork, primary-voltage fuses, or primary-voltage circuit

Voter	Entity	Segment	Vote	Comment
				breakers. An auditor for either PRC-005 or any other Standard referencing "Protection System" could read that such primary-voltage equipment is part of the Protection System and therefore subject to certain requirements in either PRC-005 or any other Standard referencing Protection System. The definition as drafted includes "Communications systems necessary. . . ". Once again, this term appears innocuous, but it is actually unclear. For example, if a transfer-trip channel is carried on a microwave path, an auditor may decide that the entire microwave equipment, microwave building battery, and microwave building emergency generator are all part of the Protection System, and thus subject to requirements in either PRC-005 or other existing or future Standards that refer to Protection System Similar to the above two items, we are concerned about the inclusion of voltage and current-sensing "devices" in the Definition. As written, applicability can be inferred to the entire device and not merely its output quantities, not only for this Standard but any other that references a Protection System.
Response: Thank you for your comments. 1. The term 'station' was used because it could include both a substation and a generation station while at the same time excluded installations that were strictly communications repeater sites. As noted on the "Assessment of Impact of Proposed Modification to the Definition of "Protection System" which was posted with the first comment period, the SDT believes that the bulk of the implementation of the new definition will be regarding PRC-005 (generically) and that there will be very little implementation associated with the other standards that utilize this term. 2. The definition has been modified to specifically include battery chargers. As to your other comments, it appears that your comments apply more to the application of the definition within PRC-005-1 or PRC-005-2 than they do to the definition itself. Within the reference materials associated with PRC-005-2, the SDT advises that equipment associated with microwave systems is part of the communications system. The SDT believes that the proposed definition is less vague than the current definition on the issues you cite, and would improve the situation that you discuss from the current level.				
Peter T Yost	Consolidated Edison Co. of New York	3	Negative	1. There is not enough clarity on whether a Distribution Provider (DP) will be able to clearly identify which protection system components it does own and needs to maintain. Many DPs own and/or operate equipment identified in the existing or proposed definition. However, not all such equipment translates into a transmission Protection System. The definition needs clarification on when such equipment is a part of the transmission protection system.

Voter	Entity	Segment	Vote	Comment
				2. Also, the time provided for the first phase "at least six months" is too open ended and does not provide entities with a clear timeline. It is suggested that one year is appropriate for the first phase phasing out the second year in stages.
Response: Thank you for your comments. 1. Your comments appear to be relative to the draft standard PRC-005-2, rather than the definition. The SDT had not completed the consideration of comments on the standard when the definition was re-posted. The SDT has responded to similar comments within the responses to ballot comments and the consideration of comments on the standard itself. "When such equipment is part of the transmission protection system" is properly a matter to be resolved within the various standards that use this term. 2. The implementation period has been revised from six months to twelve months.				
Greg Lange	Public Utility District No. 2 of Grant County	3	Negative	These systems are not always maintained at the component level. ie. meggering from the relay input test switch through the cable and the CT. This has not closed all the issues around professional judgement (interpretations) that make us nervous when faced with the human element of an audit. We need more specificity to close that gap.
Response: Thank you for your comments. Your comments appear to be relative to the draft standard PRC-005-2, rather than the definition. The SDT had not completed the consideration of comments on the standard when the definition was re-posted. The SDT has responded to similar comments within the responses to ballot comments and the consideration of comments on the standard itself.				
Silvia P Mitchell	Florida Power & Light Co.	6	Affirmative	This revision is better written.
Response: Thank you for your comments.				

Voter	Entity	Segment	Vote	Comment
Joseph G. DePoorter	Madison Gas and Electric Co.	4	Negative	Upon review of the updated proposed "Protection System" definition and its main use in describing PRC-005, which applies to BES Protective Systems, the definition needs to incorporate BES within it. Without BES used within the definition, it will be used to interpret every protection system that the industry uses. This is not the course that we wish to travel. Please note the following recommended definition: o BES Protective relays which respond to electrical quantities, o Communications systems necessary for correct operation of the BES protective functions, o Voltage and current sensing devices providing inputs to BES protective relays, o Battery and battery chargers that supply dc power to BES protective relays, communications, and control circuitry, and o Control circuitry associated with the BES protective functions through the trip coil(s) of the circuit breakers or other interrupting devices.
Response: Thank you for your comments. The station dc supply component type has been modified essentially as you suggest. As to your suggestion regarding inclusion of "BES' within the definition – this is properly an issue to address in the various standards that use this definition.				
Richard J. Mandes	Alabama Power Company	3	Affirmative	We agree that the definition provides clarity and will enhance the reliability of the Protection Systems to which it is applicable. However, we feel that there needs to be a direct linkage of the definition's effective date to the approval and implementation schedule of PRC-005-2. Since this new definition is directly linked to the proposed revised standard, it would be premature to make this definition effective prior to the effective date of the new standard.
Anthony L Wilson	Georgia Power Company	3	Affirmative	
Gwen S Frazier	Gulf Power Company	3	Affirmative	
Don Horsley	Mississippi Power	3	Affirmative	
Horace Stephen Williamson	Southern Company Services, Inc.	1	Affirmative	
Response: Thank you for your comments. When the Board of Trustees was asked to approve an interpretation of PRC-005-1 that was written by the PSMT SDT, the board acknowledged the reliability gap identified by the drafting team caused by the definition of "protection system" and directed that work to close this reliability gap should be given "priority." To close this reliability gap the BOT has directed that revised definition be applied to PRC-005-1 as soon as practical - not years from now. The implementation plan now proposes at least 12 months for entities to apply the new definition to PRC-005-1, and that should give entities time to apply the new definition to PRC-005-1.				
Jason L Marshall	Midwest ISO, Inc.	2	Abstain	We are abstaining because a number of our stakeholders have concerns regarding the definition of Protection System.
Response: Thank you for your comments. The SDT responded to the individual stakeholder comments submitted.				

Voter	Entity	Segment	Vote	Comment
Claudiu Cadar	GDS Associates, Inc.	1	Negative	We do not agree with inclusion of the trip coil. The trip coil is not a protective device; it does not sense voltage or current and operates based on a faulted condition. It is supplied the necessary input from the DC system which is based on protective relays signaling and contact operation. The trip coil is part of the circuit breaker; it is not separate equipment. Does this mean that the circuit breaker is now part of the protection system?
Response: Thank you for your comments. The current definition includes "DC Control Circuitry"; the SDT attempted to clearly define which of the many control circuits and the limit of the definition. While the current definition is vague, it can certainly include the trip coils and close coils and alarm circuits of the interrupting device. The SDT believes that the electrically-operated trip coils are an important part of the control circuitry.				
Anthony Jankowski	Wisconsin Energy Corp.	4	Negative	We Energies does not agree to the implementation plan proposed. While it makes common sense to proceed with R1 prior to proceeding with implementing R2, R3, and R4, the timeline to be compliant for R1 is too short. It will take a considerable amount of resources to migrate the maintenance plan from today's standard to the new standard in phase one. ATC recommends that time to develop and update the revised program be increased to at least one year followed by a transition time for the entity to collect all the necessary field data for the protection system within its first full cycle of testing. (In ATC's case would be 6 years) To address phase two, We Energies believes human and technological resources will be overburdened to implement this revised standard as written. The transition to implementing the new program will take another full testing cycle once the program has been updated. Increased documentation and obtaining additional resources to accomplish this will be challenging. Implementation of PRC-005-2 will impact We Energies in the following manner: a. Increase costs: double existing maintenance costs. b. Since there will be a doubling of human interaction (or more), it is expected that failures due to human error will increase, possibly proportionately. c. Breaker maintenance may need to be aligned with protection scheme testing, which will always contain elements that are include in the non-monitored table for 6 yr testing. d. We Energies is developing standards for redundant bus and transformer protection schemes. This would allow We Energies to

Voter	Entity	Segment	Vote	Comment
				test the protection packages without taking the equipment out of service. Further if one system fails, there is full redundancy available. With the current version of PRC-005-2, We Energies would need to take an outage to test the protection schemes for a transformer or a bus, there is not an incentive to install redundant schemes. We Energies is working with a condition based breaker maintenance program. This program's value would be greatly diminished under PRC-005-2 as currently written. Consideration also needs to be given for other NERC standards expected to be passed and in the implementation stage at the same time, such as the CIP standards.
Response: Thank you for your comments. Your comments appear to be relative to the draft standard PRC-005-2, rather than the definition. The SDT had not completed the consideration of comments on the standard when the definition was re-posted. The SDT has responded to similar comments within the responses to ballot comments and the consideration of comments on the standard itself.				
Linda Horn	Wisconsin Electric Power Co.	5	Negative	We object strongly to the addition of the term "voltage and current sensing devices...". This revised definition will make it a requirement to perform actual tests on the voltage and current transformers. The previous definition was "voltage and current inputs to protective relays" and this is much preferred to allow the needed flexibility in maintenance practices.
James R. Keller	Wisconsin Electric Power Marketing	3	Negative	
Response: Thank you for your comments. The current definition of Protection System uses the term "voltage and current sensing devices". The current standard PRC-005-1 requires the entity to have a PSMP for those devices. The proposed revision PRC-005-2 would require minimum maintenance activities that verify other than an annual IR Scan of the voltage and current sensing devices. As there is no method listed in the standard, some of the process flexibility that you seek has been maintained.				
Brandy A Dunn	Western Area Power Administration	1	Affirmative	Western agrees with the revised definition of a Protection System and disagreese with the Implementation Plan under PRC-005-1. The definition implementation should be delayed until approval of PRC-005-2.
Response: Thank you for your comments. When the Board of Trustees was asked to approve an interpretation of PRC-005-1 that was written by the PSMT SDT, the board acknowledged the reliability gap identified by the drafting team caused by the definition of "protection system" and directed that work to close this reliability gap should be given "priority." To close this reliability gap the BOT has directed that revised definition be applied to PRC-005-1 as soon as practical - not years from now. The implementation plan now proposes at least 12 months for entities to apply the new definition to PRC-005-1, and that should give				

Voter	Entity	Segment	Vote	Comment
entities time to apply the new definition to PRC-005-1.				
Henry Delk, Jr.	SCE&G	1	Negative	While SCE&G believes the majority of the PRC-005-2 standard is ready to be affirmed there are still inconsistencies with areas of the standard that need to be corrected prior to approval. These inconsistencies are addressed in SCE&G's comments which have been submitted for the current draft of this standard.
Response: Thank you for your comments. Your comments appear to be relative to the draft standard PRC-005-2, rather than the definition. The SDT had not completed the consideration of comments on the standard when the definition was re-posted. Please see the response to your comments on the first draft of the standard.				
Richard J Kafka	Potomac Electric Power Co.	1	Affirmative	While voting in the affirmative, PHI feels the definition could be improved by adding and associated circuitry to the third item Voltage and current sensing devices and associated circuitry providing inputs to protective relays
Response: Thank you for your comments. The SDT agrees with the commenter of the importance of this as a maintenance activity and has attempted to capture relevant maintenance activities within the revised standard itself.				
David A. Lapinski	Consumers Energy	3	Negative	Without the context of draft PRC-005-2, the changes to this definition are difficult to understand and even more difficult to implement. We therefore strongly recommend that this definition NOT be approved independently from the draft of PRC-005-2, and that development of both the definition and the standard proceed as a single activity.
David Frank Ronk	Consumers Energy	4	Negative	
Response: Thank you for your comments. When the Board of Trustees was asked to approve an interpretation of PRC-005-1 that was written by the PSMT SDT, the board acknowledged the reliability gap identified by the drafting team caused by the definition of "protection system" and directed that work to close this reliability gap should be given "priority." To close this reliability gap the BOT has directed that revised definition be applied to PRC-005-1 as soon as practical - not years from now. The implementation plan now proposes at least 12 months for entities to apply the new definition to PRC-005-1, and that should give entities time to apply the new definition to PRC-005-1.				
Gregory L Pieper	Xcel Energy, Inc.	1	Negative	Xcel Energy believes the standard still contains many aspects that are not clearly understood by entities, including what is needed to demonstrate a compliant PSMP. Comments have been submitted concurrently to NERC via the draft comment response form.
Michael Ibold	Xcel Energy, Inc.	3	Negative	
Response: Thank you for your comments. Your comments appear to be relative to the draft standard PRC-005-2, rather than the definition. The SDT had not completed the consideration of comments on the standard when the definition was re-posted. Please see the response to your comments on the first draft of				

Voter	Entity	Segment	Vote	Comment
the standard.				
James A Ziebarth	Y-W Electric Association, Inc.	4	Affirmative	Y-WEA thanks the SDT for clarifying what relays are and are not included in this definition.
Response: Thank you for your comments.				

NERC
NORTH AMERICAN ELECTRIC RELIABILITY CORPORATION

Consideration of Comments on Protection System Maintenance & Testing — Project 2007-17 – Definition of Protection System

The Protection System Maintenance & Testing Standard Drafting Team thanks all commenters who submitted comments for the revised definition of "Protection System."

The revised definition was posted for a 30-day public comment period from September 13, 2010 through October 12, 2010. Stakeholders were asked to provide feedback on the definition through a special Electronic Comment Form. There were 27 sets of comments, including comments from more than 62 different people from approximately 53 companies representing 7 of the 10 Industry Segments as shown in the table on the following pages.

http://www.nerc.com/filez/standards/Protection_System_Maintenance_Project_2007-17.html

While several commenters made suggestions to further refine the definition of Protection System, the team did not make any additional changes to the definition based on stakeholder comments. The team did, however remove the proposed modification to PER-005 from the implementation plan. No other changes were made.

- Some commenters made suggestions for modifications to various portions of the proposed definition of Protection System. There was no commonality to the proposed revisions and these modifications did not seem to provide greater clarity than was provided with the last version of the proposed definition posted for comment and ballot. Since most stakeholders agreed with the latest version of the proposed definition, no changes were made to the definition.
- Several commenters questioned the applicability of the defined term "Protection System" in PER-005; the SDT agreed and modified the Implementation Plan for the definition of Protection System to remove the reference to PER-005.
- Several commenters also used the comment period as a forum to show displeasure with the NERC and regional BES definitions. Making modifications to the definition of BES is outside the scope of work assigned to this drafting team.

If you feel that your comment has been overlooked, please let us know immediately. Our goal is to give every comment serious consideration in this process! If you feel there has been an error or omission, you can contact the Vice President and Director of Standards, Herb Schrayshuen, at 609-452-8060 or at herb.schrayshuen@nerc.net. In addition, there is a NERC Reliability Standards Appeals Process.[1]

[1] The appeals process is in the Reliability Standards Development Procedures: http://www.nerc.com/standards/newstandardsprocess.html.

Index to Questions, Comments, and Responses

1. Do you agree with the proposed definition of "Protection System?" If not, please provide specific suggestions for improvement..... 8

The Industry Segments are:

1 — Transmission Owners
2 — RTOs, ISOs
3 — Load-serving Entities
4 — Transmission-dependent Utilities
5 — Electric Generators
6 — Electricity Brokers, Aggregators, and Marketers
7 — Large Electricity End Users
8 — Small Electricity End Users
9 — Federal, State, Provincial Regulatory or other Government Entities
10 — Regional Reliability Organizations, Regional Entities

Group/Individual		Commenter	Organization	Registered Ballot Body Segment									
				1	2	3	4	5	6	7	8	9	10
1.	Group	Mallory Huggins	NERC Staff										

Additional Member	Additional Organization	Region	Segment Selection
1.	Phil Tatro	NERC	NA - Not Applicable NA
2.	Bob Cummings	NERC	NA - Not Applicable NA

Additional Member	Additional Organization	Region	Segment Selection
1.	Phil Tatro	NERC	NA - Not Applicable NA
2.	Bob Cummings	NERC	NA - Not Applicable NA

2.	Group	Guy Zito	Northeast Power Coordinating Council										X

Additional Member	Additional Organization	Region	Segment Selection
1.	Alan Adamson	New York State Reliability Council, LLC	NPCC 10
2.	Gregory Campoli	New York Independent System Operator	NPCC 2

Group/Individual		Commenter	Organization		Registered Ballot Body Segment									
					1	2	3	4	5	6	7	8	9	10
3.		Kurtis Chong	Independent Electricity System Operator	NPCC	2									
4.		Sylvain Clermont	Hydro-Quebec TransEnergie	NPCC	1									
5.		Chris de Graffenried	Consolidated Edison Co. of New York, Inc.	NPCC	1									
6.		Gerry Dunbar	Northeast Power Coordinating Council	NPCC	10									
7.		Dean Ellis	Dynegy Generation	NPCC	5									
8.		Brian Evans-Mongeon	Utility Services	NPCC	8									
9.		Mike Garton	Dominion Resources Services, Inc.	NPCC	5									
10.		Brian L. Gooder	Ontario Power Generation Incorporated	NPCC	5									
11.		Kathleen Goodman	ISO - New England	NPCC	2									
12.		Chantel Haswell	FPL Group, Inc.	NPCC	5									
13.		David Kiguel	Hydro One Networks Inc.	NPCC	1									
14.		Michael R. Lombardi	Northeast Utilities	NPCC	1									
15.		Randy MacDonald	New Brunswick System Operator	NPCC	2									
16.		Bruce Metruck	New York Power Authority	NPCC	6									
17.		Lee Pedowicz	Northeast Power Coordinating Council	NPCC	10									
18.		Robert Pellegrini	The United Illuminating Company	NPCC	1									
19.		Si Truc Phan	Hydro-Quebec TransEnergie	NPCC	1									
20.		Saurabh Saksena	National Grid	NPCC	1									
21.		Michael Schiavone	National Grid	NPCC	1									
22.		Peter Yost	Consolidated Edison Co. of New York, Inc.	NPCC	3									
3.	Group	Denise Koehn	Bonneville Power Administration		X		X		X	X				
Additional Member		**Additional Organization**	**Region**	**Segment Selection**										
1.		Dean Bender	BPA, Transmission SPC Technical Svcs	WECC	1									

Group/Individual		Commenter	Organization	Registered Ballot Body Segment									
				1	2	3	4	5	6	7	8	9	10
4.	Group	Steve Rueckert	WECC										X

	Additional Member	Additional Organization	Region	Segment Selection
1.	Mary Rieger	WECC	WECC	10
2.	John McGee	WECC	WECC	10

5.	Group	Ben Li	IRC Standards Review Committee		x								

	Additional Member	Additional Organization	Region	Segment Selection
1.	Matt Goldberg	ISO-NE	NPCC	2
2.	Charles Yeung	SPP	SPP	2
3.	Bill Phillips	MISO	MRO	2
4.	Greg Van Pelt	CAISO	WECC	2
5.	Patrick Brown	PJM	RFC	2
6.	Steve Myers	ERCOT	ERCOT	2
7.	Mark Thompson	AESO	WECC	2
8.	James Castle	NYISO	NPCC	2

6.	Group	Michael Gammon	Kansas City Power & Light	x		x		x	x				

	Additional Member	Additional Organization	Region	Segment Selection
1.	Todd Moore	KCPL	SPP	1, 3, 5, 6

7.	Individual	Jana Van Ness	Arizona Public Service Company	x		x		x	x				
8.	Individual	James Stanton	SPS Consulting Group Inc.								X		
9.	Individual	Martin Bauer	US Bureau of Reclamation					X					
10.	Individual	Karl Bryan	US Army Corps of Engineers	X				X					

Group/Individual		Commenter	Organization	Registered Ballot Body Segment									
				1	2	3	4	5	6	7	8	9	10
11.	Individual	Kirit S. Shah	Ameren	X		X		X	X				
12.	Individual	Greg Froehling	Green Country Energy					X					
13.	Individual	Dan Roethemeyer	Dynegy Inc.					X					
14.	Individual	Paul Rocha	CenterPoint Energy	X									
15.	Individual	Robert Ganley	LIPA	X									
16.	Individual	Andrew Z. Pusztai	American Transmission Company	X									
17.	Individual	Thad Ness	American Electric Power (AEP)	X		X		X	X				
18.	Individual	Kasia Mihalchuk	Manitoba Hydro	X		X		X	X				
19.	Individual	Kathleen Goodman	ISO New England Inc.		X								
20.	Individual	Patti Metro	NRECA	X		X							
21.	Individual	RoLynda Shumpert	South Carolina Electric and Gas	X		X		X	X				
22.	Individual	Terry Harbour	MidAmerican Energy	X									
23.	Individual	Michael Lombardi	Northeast Utilities	X		X		X					
24.	Individual	Dan Rochester	Independent Electricity System Operator		X								
25.	Individual	Jason L. Marshall	Midwest ISO		X								

Group/Individual		Commenter	Organization	Registered Ballot Body Segment									
				1	2	3	4	5	6	7	8	9	10
26.	Individual	Greg Rowland	Duke Energy	X		X		X	X				
27.	Individual	Alice Murdock Ireland	Xcel Energy	X		X		X	X				

1. Do you agree with the proposed definition of "Protection System?" If not, please provide specific suggestions for improvement.

Summary Consideration: Numerous commenters confused the definition with its applicability in various standards. Other commenters made suggestions to modify various portions of the definition. No changes were made to the definition in response to these comments. Several commenters questioned the applicability of the defined term "Protection System" in PER-005; the SDT agreed and modified the Implementation Plan for the definition of Protection System to remove the reference to PER-005. Several commenters also used the comment period as a forum to show displeasure with the NERC and regional BES definitions. Making changes to the definition of Bulk Electric System is outside the scope of work assigned to this drafting team.

Organization	Yes or No	Question 1 Comment
NERC Staff	No	NERC staff does not support the phrase "voltage and current sensing devices providing input to protective relays." While no version of the definition has been all-inclusive with respect to this phrase, we believe that the best phrase would be a combination of several drafts and should state the following: "voltage and current sensing devices and associated circuitry from the voltage and current sensing devices to the protective relay inputs." As currently written, the definition represents a step backward from the language in the previous definition ("voltage and current sensing inputs to protective relays and associated circuitry from the voltage and current sensing devices") and should be modified.
Response: Thank you for your comment. The SDT believes the current draft of the definition as balloted is better supported by industry.		
Northeast Power Coordinating Council	No	This project addresses the definition of a Protection System. However, an ongoing issue that needs to be addressed is clarification of when a Bulk Electric System transmission Protection System applies to a Distribution Provider. An example would be for a tee-tap off a Bulk Power System 345kV line to a step down transformer supplying distribution--would the relaying on the low side of the transformer be expected to comply with the requirements of PRC-005-2? Would the protection system configuration be considered a Protection System? Will this issue be addressed within the scope of Project 2007-17?
Response: Thank you for your comment. The SDT believes these questions are not within the scope of Project 2007-17 and should be addressed by the Regional Entities.		
WECC		The definition is generally acceptable. However, we believe that better language for the third bullet is as follows: DC supply sources affecting the "Protection System" (including station batteries, battery chargers, and non-battery-based dc supply), and...A definition of non-battery-based dc supply should be included to avoid confusion and we offer the following: The inverter or rectifier in the circuit, dependent upon how the end use quipment is designed. Uninterruptible power supply (UPS) such as on-line, line-interactive or standby that some of the protection system could be on. The intent of the suggestion would consider that the entire protection system has to operate in order to maintain the reliability of the BES. An example would be if the protective relay

Organization	Yes or No	Question 1 Comment
		and associated communications were on a UPS system and the intended device to operate were on station batteries, this would be the best case scenario as the Micro processors relays and the newer associated communications do not like the voltage drop when the station switches to the station batteries, hence the use of UPS options. Micro processors relays do have internal battery backup to keep them up and running, though a maintenance task would have to be included to be sure that they are properly maintained and tested, so the UPS option is easier and has been “kind of” an industry standard in the past. In the end the UPS would have to be on a maintenance schedule also.
Response: Thank you for your comment. The SDT believes the current draft of the definition as balloted is better supported by industry. The term “non-battery-based dc supply” is meant to be a broad term to capture other methods such as flywheels, compressed air, fuel cells, or any other emerging technology which is capable of supplying dc power to the Protection System.		
Kansas City Power & Light	No	The phrase, "non-battery-based dc supply" is ambiguous and not well defined. It is critical this definition be clear in its intent and not introduce confusion to allow maintenance programs to be effective. Recommend this phrase either needs additional definition or should be considered for removal.
Response: Thank you for your comment. The SDT believes the language is clear and supported by industry. The term “non-battery-based dc supply” is meant to be a broad term to capture other methods such as flywheels, compressed air, fuel cells, or any other emerging technology which is capable of supplying dc power to the Protection System.		
SPS Consulting Group Inc.	No	The revised definition perpetuates the confusion over "communications systems" embedded or otherwise associated with Protection Systems. The term "communications components" is more accurate.
Response: Thank you for your comment. The SDT believes the language is clear and addresses relay communication systems currently used by industry.		
US Bureau of Reclamation	No	The term "protection functions" is ambiguous as it is not related to the protection function associated with the protective relays. There are other protection functions not associated with protective relays that respond to electrical quantities. The language for Communication systems should be changed to remove the ambiguity. The following change would be clear, "Communication system necessary for the correct operation of the protective relays" The input to the relays is from voltage and current sensing devices through their respective circuits. Since the definition for protective relays separates the term "control circuitry" associated with protective relays, it is clear that protective relays do not also include the "control circuitry". By the same token, voltage and current sensing devices do not include their related circuits. The definition for voltage and current sensing devices should be revised to include the term "circuits". The following language change would serve make it clear: "Voltage and current sensing devices and their respective circuits providing inputs protective relays".
Response: Thank you for your comment. The SDT believes the current draft of the definition as balloted is clear, concise, and supported by industry.		
US Army Corps of Engineers	No	The use of the term "protection functions" is not a defined NERC term and either the term should be defined or it should not be used. At best the term is ambiguous and could lead to scope growth by auditors. Recommend

Organization	Yes or No	Question 1 Comment
		that the following changes be made: "Communication system necessary for the correct operation of the protective relays." "Control circuitry associated with protective relays through the trip coil(s) of the circuit breaker or other interrupting device." See the next paragraph for the proposed correction to the DC Supply part of the definition. The input to the relay is from voltage and current sensing devices yet there is no mention of the associated circuits. The same can be said about the station DC supply circuits. The definition should apply to the circuits providing inputs or control power to the protective relays and from the output of the relays to the tripping coils of the circuit breaker. Recommend the following: "Voltage and current sensing devices and their respective circuits providing inputs to the protective relays." "Station DC supply associated with protective relays (including station batteries, battery charger, non-battery-based DC supply circuitry to the protective relays and from the relay to the trip coil(s)of the circuit breaker), and"
Response: Thank you for your comment. The SDT believes the current draft of the definition as balloted is clear, concise, and supported by industry.		
Dynegy Inc.	No	The majority of the definition is good; however, the term "non-battery-based dc supply' is still somewhat vague. Can you please further define or provide some examples?
Response: Thank you for your comment. The SDT believes the language is clear and supported by industry. The term "non-battery-based dc supply" is meant to be a broad term to capture other methods such as flywheels, compressed air, fuel cells, or any other emerging technology which is capable of supplying dc power to the Protection System.		
CenterPoint Energy	No	(a) CenterPoint Energy believes the proposed re-definition of "Protection System" is technically incorrect due to the inclusion of trip coils as part of the control circuitry. A protection system has correctly performed its function if it provides tripping voltage up to the terminals of trip coils. From that point, the circuit breaker can fail to timely interrupt fault current due to several factors, such as a binding mechanism, stuck mechanism, broken pull rod, bad insulating medium, or bad trip coils. Local breaker failure protection, or remote backup protection, is installed to address the various possible causes of circuit breaker failure. The proposed re-definition of "Protection System" should be revised to indicate control circuitry associated with protective functions UP TO THE TERMINALS OF the trip coil(s) of the circuit breakers or other interrupting devices. (b) On the surface, the proposed re-definition of "Protection System" appears mainly applicable to PRC-005 based upon the Standards Announcement and proposed Implementation Plan. However, NERC standard PRC-004-1 Analysis and Mitigation of Transmission and Generation Protection System Misoperations also uses the capitalized term "Protection System". CenterPoint Energy believes it is inappropriate to require reporting of Misoperations of transmission Protection Systems and generator Protection Systems for bad trip coils within a circuit breaker. For application to PRC-004-1, CenterPoint Energy recommends revising the proposed re-definition to indicate control circuitry associated with protective functions UP TO THE TERMINALS OF the trip coil(s) of the circuit breakers or other interrupting devices.
Response: Thank you for your comment. The SDT believes the current draft of the definition as balloted is better supported by industry.		
Midwest ISO	No	We have an issue with the implementation plan. The implementation plan proposes to capitalize the term

Organization	Yes or No	Question 1 Comment
		"protection system" in NUC-001-2, PER-005-1, and PRC-001-1. We disagree with capitalizing the term because protection system was a defined term when these standards were written. Thus, if the drafting teams of those standards intended for the definition in the NERC glossary of terms to apply, they would have capitalized the term. Furthermore, capitalizing the term may fundamentally alter the meaning of the standard. For PER-005-1, we believe the standard is altered because protection system as used in this standard actually refers to special protection system or remedial action schemes.
Response: Thank you for your comment. The SDT agrees and will revise the Implementation Plan to remove PER-005 from the list of standards to be modified. However, the SDT believes the term Protection System should be capitalized as described in the Implementation Plan for NUC-001-2 and PRC-001-1.		
American Electric Power (AEP)	No	1. This change in definition needs to occur concurrently with other related projects (PRC-005-2). Neither the SDT nor the SC should establish a practice of making changes to definitions outside the parameters of changes to standards. This will introduce opportunities for confusion and does not provide the appropriate signals to the Registered Entities to adjust their programs and make the appropriate changes. If this has to be done faster than the pace of the current PRC-005-2 project, we suggest it still be paired with that project, but a smaller scope be considered to allow for this to pass quickly as possible and then the remaining work can be accomplished in PRC-005-3. 2. We suggest that the SDT consider the creation of sub-definitions opposed to crafting a single term for complex and diverse components that could make up the Protection System. As it stands, AEP cannot support this as it still does not remove the degree of ambiguity that could result in interpretation challenges during later enforcement and monitoring activities. We understand the urgency to make progress; however, the deliverables of this team can have significant collateral impacts in the compliance process. 3. The bullet for Protective relays should be further clarified with the addition of applied on or designed to provide protection for the BES that responds to the electrical fault or disturbance conditions. 4. Below are the comments that were provided in the second draft that were not adequately addressed in the consideration of the comments. A. The definition as drafted includes "Station dc supply." While this appears reasonable and innocuous, the term is unclear and could be construed by an auditor to include a lot of equipment and infrastructure not intended by the PSMT SDT. For example, station battery chargers are typically supplied by station auxiliary power transformers, which in turn are supplied by primary-voltage bus work, primary-voltage fuses, or primary-voltage circuit breakers. An auditor for either PRC-005 or any other Standard referencing "Protection System" could read that such primary-voltage equipment is part of the Protection System and therefore subject to certain requirements in either PRC-005 or any other Standard referencing Protection System. B. The definition as drafted includes "Communications systems necessary. . . ". Once again, this term appears innocuous, but it is actually unclear. For example, if a transfer-trip channel is carried on a microwave path, an auditor may decide that the entire microwave equipment, microwave building battery, and microwave building emergency generator are all part of the Protection System, and thus subject to requirements in either PRC-005 or other existing or future Standards that refer to Protection System. AEP

Organization	Yes or No	Question 1 Comment
		recommends that the term be phrased "communications paths" opposed to "communications systems". C. Similar to the above two items, we are concerned about the inclusion of voltage and current-sensing "devices" in the Definition. As written, applicability can be inferred to the entire device and not merely its output quantities, not only for this Standard but any other that references a Protection System. AEP recommends the phrase "circuitry from voltage and current-sensing devices providing inputs to protective relays" instead of "voltage and current-sensing devices providing inputs to protective relays."
Response: When the Board of Trustees was asked to approve an interpretation of PRC-005-1 that was written by the PSMT SDT, the board acknowledged the reliability gap identified by the drafting team caused by the definition of "protection system" and directed that work to close this reliability gap should be given "priority." To close this reliability gap the BOT has directed that revised definition be applied to PRC-005-1 as soon as practical - not years from now. The implementation plan now proposes at least 12 months for entities to apply the new definition to PRC-005-1, and that should give entities time to apply the new definition to PRC-005-1. **2. The SDT believes the current draft of the definition as balloted is clear, concise, and supported by industry.** **3. The SDT believes these questions are not within the scope of Project 2007-17 and should be addressed by the Regional Entities.** **4A. The SDT believes the current draft of the definition as balloted is clear, concise, and supported by industry. The definition of Protection System with regards to dc supply has been modified and now reads:** Station dc supply associated with protective functions (including station batteries, battery chargers, and non-battery-based dc supply). **4B. The SDT believes your comment pertains to standards and requirements, and not the definition of Protection System.** **4C. The SDT believes the current draft of the definition as balloted is better supported by industry.**		
Independent Electricity System Operator	No	While we agree with the definition itself, we do have a concern about its application. An ongoing issue that needs to be addressed is clarification of when a Bulk Electric System transmission Protection System applies to a Distribution Provider. This was addressed in part in the interpretation request regarding transmission Protection Systems, Project 2009-17. An example would be for a tee-tap off a Bulk Power System 345kV line to a step down transformer supplying distribution -- would the relaying on the low voltage side of the transformer be expected to comply with the requirements of PRC-005-2? Would the protection system configuration be considered a Protection System? Will this issue be addressed within the scope of Project 2007-17?
Response: Thank you for your comment. This clarification is provided in each requirement that uses the term, "Protection System" by identifying the responsible entity. The question relates to "application" of the definition, not to the definition."		
NRECA		My comment is related to the Implementation plan which will modify the PER-005. I am specifically concerned with changing in R3.1 "established operating guides or "protection systems" to mitigate IROL violations" to "established operating guides or "Protection Systems" to mitigate IROL violations". This modification changes the intent of requirement PER-005 R3.1. The requirement was developed by the drafting team to address an Order 693 directive to require the use of simulators by reliability coordinators, transmission operators and balancing authorities that have operational control over a significant portion of load and generation. The System Personnel Training SDT felt that the use of the phrase "established IROLs or has established operating guides

Organization	Yes or No	Question 1 Comment
		or protection systems to mitigate IROL violations" appropriately represents the impact of entities on the reliability of the BES. In the context of PER-005 R3.1, this specific language was used to broadly include anything that an entity utilizes to prevent an IROL which could be an "operating guide or a protection system" like a RAS in WECC or an SPS in the Eastern Interconnection. It was not intended to include all the items included in the term that is being defined in Project 2007-17.
Response: Thank you for your comment. The SDT agrees and will revise the Implementation Plan to remove PER-005 from the list of standards to be modified.		
MidAmerican Energy	No	The drafting team did not properly address previous comments to include BES references in each PRC-005 sub bullet definitions and left "DC system" wording in the definition with only a comment in parentheses. The Protection System definition affects multiple standards and must stand alone across those standards. Therefore: 1. BES references are still needed in each sub bullet definition to eliminate ambiguity and to create clearly auditable requirements, meeting a basic standards drafting principal being requested both by FERC and the industry. 2. "DC system" remains a wide open definition. Because regulators and auditors are auditing to "zero" defect requirements and imposing their own interpretations, only specific wording is acceptable. The term "DC system" needs to be replaced with explicit pieces of equipment such as "batteries, battery chargers, and AC / DC converters". To be a credible audit process, both the auditor and audited entity must have a clear understanding of what is being audited. DC system can be interpreted in many ways by an entity or auditor and is not an acceptable term. Further, BES references are needed to create clear and auditable boundaries for this definition.
Response: Thank you for your comments. These comments all relate to "application" of the definition; "auditable boundaries" and "auditable requirements" are part of the standard.		
Duke Energy	Yes	We agree with the revised definition. However the added language raises a question regarding how PRC-005-2 would be applied to DC supply situations where the battery is the backup to the "normal" source of DC power. Specifically, it's unclear to us that Uninterruptible Power Supplies (UPS), rectifiers and motor-generator sets that use batteries as a backup are included in the scope of Table 1.
Response: Thank you for your comment. The SDT believes your comment pertains to the standard PRC-005-2 and not the definition of Protection Systems.		
Xcel Energy	Yes	The Implementation Plan indicates that the lower case "protection system" in 3 other standards would be replaced with the capitalized term "Protection System" to properly reflect its use in those standards. In PRC-001 the term "protective system" is also used, however the Implementation Plan does not indicate whether this term will also be replaced. If not, then it would seem to imply that the term "protective system" has different meaning than "protection system/Protection System". There is concern that the use of "Protection System" in PRC-001 will require entities to 'coordinate" changes to all elements of the Protection System, which could be of no value for elements such as batteries, battery chargers. It is not clear as to if the intent that ALL elements of the

Organization	Yes or No	Question 1 Comment
		Protection System be coordinated when a new or changed Protection System occurs.
Response: Thank you for your comment. The term "protective system" is not a defined term in the NERC glossary and is not addressed by the Implementation Plan.		
LIPA	Yes	Station dc supply associated with protective functions (including station batteries, battery chargers, and non-battery-based dc supply), and ....Change to Station dc supply associated with protective functions, and....
Response: Thank you for your comment. The SDT believes the current draft of the definition as balloted is better supported by industry.		
American Transmission Company	Yes	None.
Manitoba Hydro	Yes	
ISO New England Inc.	Yes	
South Carolina Electric and Gas	Yes	
Northeast Utilities	Yes	
IRC Standards Review Committee	Yes	
Bonneville Power Administration	Yes	
Arizona Public Service Company	Yes	
Ameren	Yes	
Green Country Energy	Yes	

NERC
NORTH AMERICAN ELECTRIC RELIABILITY CORPORATION

Consideration of Comments on Third Ballot — Project 2007-17 Protection System Maintenance (Protection System definition)

Dates of Third Ballot: 10/2/10 - 10/14/10

Summary: A successive ballot of the definition of Protection System was conducted from October 2-14, 2010 and achieved a quorum and an overall weighted segment approval of 84.52%.

Numerous balloters confused the definition with its applicability in various standards. Several balloters questioned the applicability of this defined term in PER-005 and the SDT modified the Implementation Plan for the definition to remove the reference to PER-005.

Several balloters used the ballot period as a forum to show displeasure with the NERC and Regional BES definitions. Modifying the definition of Bulk Electric System is outside the scope of this drafting team.

Some balloters made suggestions to modify various portions of the definition, however most balloters supported the definition as posted and the drafting team did not adopt any suggestions for further modifications to the definition.

Several balloters opposed this ballot because they felt the definition of Protection System should not have been balloted separately from the draft standard PRC-005-2. When the Board of Trustees was asked to approve an interpretation of PRC-005-1 that was written by the PSMT SDT, the board acknowledged the reliability gap identified by the drafting team caused by the definition of "protection system" and directed that work to close this reliability gap should be given “priority.” To close this reliability gap the BOT directed that the revised definition be applied to PRC-005-1 as soon as practical - not years from now. The implementation plan allows entities at least 12 months to apply the new definition to PRC-005-1, and that should give entities time to apply the new definition to PRC-005-1.

Segment	Entity	Member	Ballot	Comments
1 5	American Electric Power AEP Service Corp.	Paul B. Johnson Brock Ondayko	Negative	1. This change in definition needs to occur concurrently with other related projects (PRC-005-2). Neither the SDT nor the SC should establish a practice of making changes to definitions outside the parameters of changes to standards. This will introduce opportunities for confusion and does not provide the appropriate signals to the Registered Entities to adjust their programs and make the appropriate

Segment	Entity	Member	Ballot	Comments
6	AEP Marketing	Edward P. Cox		changes. If this has to be done faster than the pace of the current PRC-005-2 project, we suggest it still be paired with that project, but a smaller scope be considered to allow for this to pass quickly as possible and then the remaining work can be accomplished in PRC-005-3. 2. We suggest that the SDT consider the creation of sub-definitions opposed to crafting a single term for complex and diverse components that could make up the Protection System. As it stands, AEP cannot support this as it still does not remove the degree of ambiguity that could result in interpretation challenges during later enforcement and monitoring activities. We understand the urgency to make progress; however, the deliverables of this team can have significant collateral impacts in the compliance process. 3. The bullet for Protective relays should be further clarified with the addition of applied on or designed to provide protection for the BES that responds to the electrical fault or disturbance conditions. 4. Below are the comments that were provided in the second draft that were not adequately addressed in the consideration of the comments. A. The definition as drafted includes "Station dc supply." While this appears reasonable and innocuous, the term is unclear and could be construed by an auditor to include a lot of equipment and infrastructure not intended by the PSMT SDT. For example, station battery chargers are typically supplied by station auxiliary power transformers, which in turn are supplied by primary-voltage bus work, primary-voltage fuses, or primary-voltage circuit breakers. An auditor for either PRC-005 or any other Standard referencing "Protection System" could read that such primary-voltage equipment is part of the Protection System and therefore subject to certain requirements in either PRC-005 or any other Standard referencing Protection System. B. The definition as drafted includes "Communications systems necessary. . . ". Once again, this term appears innocuous, but it is

Segment	Entity	Member	Ballot	Comments
				actually unclear. For example, if a transfer-trip channel is carried on a microwave path, an auditor may decide that the entire microwave equipment, microwave building battery, and microwave building emergency generator are all part of the Protection System, and thus subject to requirements in either PRC-005 or other existing or future Standards that refer to Protection System. AEP recommends that the term be phrased "communications paths" opposed to "communications systems". C. Similar to the above two items, we are concerned about the inclusion of voltage and current-sensing "devices" in the Definition. As written, applicability can be inferred to the entire device and not merely its output quantities, not only for this Standard but any other that references a Protection System. AEP recommends the phrase "circuitry from voltage and current-sensing devices providing inputs to protective relays" instead of "voltage and current-sensing devices providing inputs to protective relays."

Response: When the Board of Trustees was asked to approve an interpretation of PRC-005-1 that was written by the PSMT SDT, the board acknowledged the reliability gap identified by the drafting team caused by the definition of "protection system" and directed that work to close this reliability gap should be given "priority." To close this reliability gap the BOT has directed that revised definition be applied to PRC-005-1 as soon as practical - not years from now. The implementation plan now proposes at least 12 months for entities to apply the new definition to PRC-005-1, and that should give entities time to apply the new definition to PRC-005-1.

2. The SDT believes the current draft of the definition as balloted is clear, concise, and supported by industry.

3. The SDT believes these questions are not within the scope of Project 2007-17 and should be addressed by the Regional Entities.

4A. The SDT believes the current draft of the definition as balloted is clear, concise, and supported by industry. The definition of Protection System with regards to dc supply has been modified and now reads: Station dc supply associated with protective functions (including station batteries, battery chargers, and non-battery-based dc supply).

4B. The SDT believes your comment pertains to standards and requirements, and not the definition of Protection System.

4C. The SDT believes the current draft of the definition as balloted is better supported by industry.

Segment	Entity	Member	Ballot	Comments
1	Baltimore Gas & Electric Company	John J. Moraski	Negative	The definition can be read to imply an obligation to test PTs and CTs in a way that exceeds the apparent intention of the SDT as expressed in the FAQs. The definition should be constructed so as to present no conflict with idea that the standard can be met by verifying the correctness of signal delivered from PTs and CTs to protective relays. Suggestive language included with the previous ballot --- Protection System: Protective relays which respond to electrical quantities, communication systems necessary for correct operation of protective functions, voltage and current sensing device output circuits and the associated circuits to the inputs of protective relays, station dc supply, and control circuitry associated with protective functions through the trip coil(s) of the circuit breakers or other interrupting devices.
Response: The SDT believes your comment is aimed at revising the definition so that it achieves a particular outcome when applied to specific requirements in the proposed PRC-005. The team is trying to develop a definition that would be applicable for use in several standards, and does not want to make modifications to the definition that would limit the term's applicability.				
1	Colorado Springs Utilities	Paul Morland	Negative	CSU feels that battery chargers should not be included in the "Protection System" definition based on the following: Battery chargers are not a single point of immediate failure. As long as real-time station battery monitoring is provided, a reliable protection system will be maintained.
Response: When the Board of Trustees was asked to approve an interpretation of PRC-005-1 that was written by the PSMT SDT, the board acknowledged the reliability gap identified by the drafting team caused by the definition of "protection system" not including battery chargers, and directed that work to close this reliability gap should be given “priority.” To close this reliability gap the BOT has directed that revised definition be applied to PRC-005-1 as soon as practical - not years from now. The implementation plan now proposes at least 12 months for entities to apply the new definition to PRC-005-1, and that should give entities time to apply the new definition to PRC-005-1.				
1 3 6	FirstEnergy Energy Delivery FirstEnergy Solutions FirstEnergy Solutions	Robert Martinko Kevin Querry Mark S Travaglianti	Affirmative	FirstEnergy supports the definition and thanks the drafting team for incorporating our suggestion for clarification of the phrase "station dc supply".

Segment	Entity	Member	Ballot	Comments
4	Ohio Edison Company	Douglas Hohlbaugh		
Response: The SDT appreciates your support.				
1	MidAmerican Energy Co.	Terry Harbour	Negative	The drafting team did not properly address previous comments to include BES references in each PRC-005 sub bullet definitions and left "DC system" wording in the definition with only a comment in parentheses. The Protection System definition affects multiple standards and must stand alone across those standards. Therefore: 1. BES references are still needed in each sub bullet definition to eliminate ambiguity and to create clearly auditable requirements, meeting a basic standards drafting principal being requested both by FERC and the industry. 2. "DC system" remains a wide open definition. Because regulators and auditors are auditing to "zero" defect requirements and imposing their own interpretations, only specific wording is acceptable. The term "DC system" needs to be replaced with explicit pieces of equipment such as "batteries, battery chargers, and AC / DC converters". To be a credible audit process, both the auditor and audited entity must have a clear understanding of what is being audited. DC system can be interpreted in many ways by an entity or auditor and is not an acceptable term. Further, BES references are needed to create clear and auditable boundaries for this definition.
Response: The SDT believes your comment is aimed at revising the definition so that it achieves a particular outcome when applied to specific requirements in the proposed PRC-005. The team is trying to develop a definition that would be applicable for use in several standards, and does not want to make modifications to the definition that would limit the term's applicability.				

Segment	Entity	Member	Ballot	Comments
1	Nebraska Public Power District	Richard L. Koch	Affirmative	1. Please provide the reasoning for including the battery chargers. Where do you draw the line of what is included. For example, should the panel providing power to the chargers be included? 2. Better clarification is needed when defining the DC control circuit. The trip coils are identified on one end of the circuit but nothing is identified upstream of the trip coils. For example, control switches, indicators, auxiliary relays, power supply breakers, etc.
Response: 1. When the Board of Trustees was asked to approve an interpretation of PRC-005-1 that was written by the PSMT SDT, the board acknowledged the reliability gap identified by the drafting team caused by the definition of "protection system" not including battery chargers, and directed that work to close this reliability gap should be given "priority." The definition of Protection System with regards to dc supply has been modified and now reads: Station dc supply associated with protective functions (including station batteries, battery chargers, and non-battery-based dc supply). The SDT believes this clearly limits the dc supply. 2. The SDT believes the balloted definition includes all the control circuitry essential for the Protection System to function properly.				
1	Pacific Gas and Electric Company	Chifong L. Thomas	Negative	We disagree with the drafting team response to comments that the term BES should be included only in the standard. It is an essential part of the definition as it pertains to the purpose of NERC Standards. As a result we have changed our vote to negative. We view the basic intent of this definition is to identify what protective systems in facilities are to be utilized to protect the BES from two primary troubles 1) minimize interruption of the flow of electrical power from one portion of the BES to another, and 2) to prevent the propagation of BES trouble from one portion of the BES to another. While we agree that protection systems for all transmission related components can be adequately limited in scope by utilizing "electrical quantities", we do not feel that it is adequate for generating facilities. There are multitudes of elements in generating facilities that can remove the facility from service and impact the power flow from the facility to other portions of the BES. The efforts utilized thus far demonstrate that it is not desirable or realistically possible to address all devices from an oversight point of view and that the current definition which discriminates solely with the qualifier of "electrical quantities" is too broad and leaves much open to interpretation to define what types of protection are included in the definition. The definition, as it currently reads, leaves many protective devices to the owner/operator to manage for

Segment	Entity	Member	Ballot	Comments
				maximum reliability of the generating facility. In the interest of clarity the definition should limit the scope for protective relays to those relays designed to prevent the propagation of trouble from one portion of the BES to another. We recommend changing the proposed definition to read as follows: A control system designed to detect electrical faults or abnormal conditions in the power system and initiate corrective action(s). A protection system consists of the following components: 1. Protective relays which protect: a) Transmission BES elements, including generating facility step up transformers, and respond to power system electrical quantities such as voltage and current, b) Generating facilities by responding to power system electrical quantities, such as voltage and current, and are designed to protect against potential problems in the BES on the high side of the generator step up transformer. 2. Communications systems necessary for correct operation of protective functions, 3. Voltage and current sensing devices which transform high level power system quantities to low level inputs for protective relays, and the associated circuitry to the inputs for protective relays. 4. Station DC supply associated with protective relay power supplies and control functions (including station batteries, battery chargers, and non-battery-based DC supply), and 5. Control circuitry associated with protective relay functions (including auxiliary relays) through the trip coil(s) of the circuit breakers or other interrupting devices.
Response: The SDT believes your comment is aimed at revising the definition so that it achieves a particular outcome when applied to specific requirements in the proposed PRC-005. The team is trying to develop a definition that would be applicable for use in several standards, and does not want to make modifications to the definition that would limit the term's applicability. The applicability of the definition of Protection System will be addressed in the various standards which utilize the definition. The SDT believes the current draft of the definition as balloted is better supported by industry.				
1 3 4 5	Seattle City Light	Pawel Krupa Dana Wheelock Hao Li Michael J. Haynes	Affirmative	Seattle supports this definition with the understanding that issues that have been previously addressed through comment will be considered during the Standard development process.

Segment	Entity	Member	Ballot	Comments
6		Dennis Sismaet		
Response: The SDT appreciates your support.				
1 3	Tri-State G & T Association, Inc.	Keith V. Carman Janelle Marriott	Negative	2nd bullet - Add communication-aided before protective functions. We think that this is important because you can have correct operation of protective functions without the communication-aided tripping functions operating correctly, especially with POTT or DCUB schemes. 5th bullet - replace through with including. We think that the phrase through the trip coil could be misinterpreted to mean protective functions that cause current to flow through the trip coil rather than the inclusive meaning such as from A through Z. If the intent of the drafting team is to exclude the trip coil, then we think it should be changed to control circuitry associated with protective functions required to operate the trip coil(s) of the circuit breakers or other interrupting devices.
Response: The SDT believes the current draft of the definition as balloted is clear, concise, and supported by industry.				

Segment	Entity	Member	Ballot	Comments
1	Western Area Power Administration	Brandy A Dunn	Negative	The term "protection functions" is ambiguous as it is not related to the protection function associated with the protective relays. There are other protection functions not associated with protective relays that respond to electrical quantities. The language for Communication systems should be changed to remove the ambiguity. The following change would be clear, "Communication system necessary for the correct operation of the protective relays" The input to the relays is from voltage and current sensing devices through their respective circuits. Since the definition for protective relays separates the term "control circuitry" associated with protective relays, it is clear that protective relays do not also include the "control circuitry". By the same token, voltage and current sensing devices do not include their related circuits. The definition for voltage and current sensing devices should be revised to include the term "circuits". The following language change would serve make it clear: "Voltage and current sensing devices and their respective circuits providing inputs protective relays,".
5	U.S. Bureau of Reclamation	Martin Bauer P.E.	Negative	The term "protection functions" is ambiguous as it is not related to the protection function associated with the protective relays. There are other protection functions not associated with protective relays that respond to electrical quantities. The language for Communication systems should be changed to remove the ambiguity. The following change would be clear, "Communication system necessary for the correct operation of the protective relays" The input to the relays is from voltage and current sensing devices through their respective circuits. Since the definition for protective relays separates the term "control circuitry" associated with protective relays, it is clear that protective relays do not also include the "control circuitry". By the same token, voltage and current sensing devices do not include their related circuits. The definition for voltage and current sensing devices should be revised to include the term "circuits". The following language change would serve make it clear: "Voltage and current sensing devices and their respective circuits providing correct inputs to protective relays."

Segment	Entity	Member	Ballot	Comments
Response: The SDT believes the current draft of the definition as balloted is clear, concise, and supported by industry.				
2	Midwest ISO, Inc.	Jason L Marshall	Negative	We disagree with the implementation plan. The implementation plan calls for capitalizing protection system in NUC-001-2 and PER-005-1. Because Protection System had been included in the NERC Glossary of Terms before the development of these standards, we believe the drafting teams would have capitalized those terms in these standards if they had intended for the Protection System definition to apply. Furthermore, we believe the use of protection system PER-005-1 was actually intended to be special protection systems or remedial actions schemes. To capitalize protection system in PER-005-1 will fundamentally alter the requirement in which it is contained.
Response: The SDT agrees and will revise the Implementation Plan to remove PER-005 from the list of standards to be modified. However, the SDT believes the term Protection System should be capitalized as described in the Implementation Plan for NUC-001-2.				
3 4 5	Consumers Energy	David A. Lapinski David Frank Ronk James B Lewis	Negative	We understand that this posting is intended to address perceived flaws in the currently approved definition. However, since this change, if approved, is likely to result in changes to an entity's PRC-005-1 maintenance program, we feel that it is inappropriate to approve this definition without simultaneous approval of the revised PRC-005-2 which will clarify the related changes to maintenance programs.
Response: When the Board of Trustees was asked to approve an interpretation of PRC-005-1 that was written by the PSMT SDT, the board acknowledged the reliability gap identified by the drafting team caused by the definition of "protection system" not including battery chargers, and directed that work to close this reliability gap should be given “priority.” To close this reliability gap the BOT has directed that revised definition be applied to PRC-005-1 as soon as practical - not years from now. The implementation plan now proposes at least 12 months for entities to apply the new definition to PRC-005-1, and that should give entities time to apply the new definition to PRC-005-1.				
3	MidAmerican Energy Co.	Thomas C. Mielnik	Negative	BES references are needed in each sub bullet definition to eliminate ambiguity and to create clearly auditable requirements. The term "DC system" needs to be replaced with explicit pieces of equipment such as "batteries, battery chargers, and AC / DC converters".
Response: The SDT believes these comments relative to BES are not within the scope of Project 2007-17 and should be addressed by the Regional Entities; and that the current draft of the definition as balloted is clear, concise, and contains the specific dc systems equipment you mention.				

Segment	Entity	Member	Ballot	Comments
3	San Diego Gas & Electric	Scott Peterson	Affirmative	SDG&E believes that the following changes should be incorporated. Third item: DC supply sources affecting the "Protection System" (including station batteries, battery chargers, and non-battery-based dc supply), and SDG&E also believe that a definition of non-battery-based dc supply should be included to avoid confusion and recommend the following: "The inverter or rectifier in the circuit, dependent upon how the end use equipment is designed. Uninterruptible power supply (UPS) such as on-line, line-interactive or standby that some of the protection system could be on."
Response: The SDT appreciates your support, and believes the current draft of the definition as balloted is clear, concise, and supported by industry. The term “non-battery-based dc supply” is meant to be a broad term to capture other methods such as flywheels, compressed air, fuel cells, or any other emerging technology which is capable of supplying dc power to the Protection System.				
3 4 5	Wisconsin Electric Power Marketing Wisconsin Energy Corp. Wisconsin Electric Power Co.	James R. Keller Anthony Jankowski Linda Horn	Negative	1. The Protection System definition needs to indicate that the listed items after relays are intended to be associated with relays. As written, most of the items apply to undefined "protective functions". The Implementation Plan's change to PER-005-1 R3.1 restricts where R3.1 applies. For example, changing "protection systems" to "Protection Systems" will exclude an SPS that does not operate relays. Replace term "voltage & current sensing devices" with "voltage & current sensing inputs to protective relays". 2. Remove the battery chargers from the definition and make reference to station batteries only. There needs to be improved coordination between proposed changes and definitions and the associated proposed changes and testing.
Response: 1. The drafting team does not believe that the additional language is needed in the definition. The SDT agrees with the comment on PER-005 and will revise the Implementation Plan to remove PER-005 from the list of standards to be modified. 2. When the Board of Trustees was asked to approve an interpretation of PRC-005-1 that was written by the PSMT SDT, the board acknowledged the reliability gap identified by the drafting team caused by the definition of "protection system" not including battery chargers, and directed that work to close this reliability gap should be given “priority.” To close this reliability gap the BOT has directed that revised definition be applied to PRC-005-1 as soon as practical. The SDT believes the current draft of the definition as balloted is clear, concise, and supported by industry.				

Segment	Entity	Member	Ballot	Comments
4	Madison Gas and Electric Co.	Joseph G. DePoorter	Affirmative	Believe that Communication systems necessary for correct operation of protective "relay" functions be considered as an enhancement to the definition. This would also need to be added within the Station dc supply and Control circuitry bullets. This will provide clarity to exactly what the definition is describing.
Response: The SDT appreciates your support. The SDT believes the current draft of the definition as balloted is clear, concise, and supported by industry.				
5	Constellation Power Source Generation, Inc.	Amir Y Hammad	Negative	Constellation has previously voted against these revised definitions because as written, it implies that the testing of PTs and CTs in PRC-005 is required. This latest proposal is no different. Constellation agrees with the SDT in that current and voltage sensing devices are an important aspect of the Protection System. However, by including PTs and CTs in the definition, auditors have been interpreting that as stating that dielectric testing and other tests are necessary on them. This does not seem to be the intention of the SDT. The intention of the SDT seems to be to verify that the sensing devices are delivering acceptable signals to relays. Table 1 a of the PRC-005-2 standard includes: Voltage & Current Sensing Devices / 12 Calendar Years / Verify proper functioning of the current and voltage circuit inputs from the voltage and current sensing devices to the protective relays. The FAQ for PRC-005-2 is even clearer in stating that ensuring the protection system is receiving the expected values from current and voltage sensing devices. But neither the originally revised or newly revised definitions carry that implication very well. The definitions are still including the devices themselves and not their outputs. To make the definition less ambiguous with PTs and CTs, Constellation proposes the following change in the definition: Voltage and current sensing devices providing inputs to protective relays to; Voltage and current sensing device output circuits and the associated circuits to the inputs of protective relays.

Segment	Entity	Member	Ballot	Comments
6	Constellation Energy Commodities Group	Brenda Powell	Negative	Constellation has previously voted against these revised definitions because as written, it implies that the testing of PTs and CTs in PRC-005 is required. This latest proposal is no different. Constellation agrees with the SDT in that current and voltage sensing devices are an important aspect of the Protection System. However, by including PTs and CTs in the definition, auditors have been interpreting that as stating that dielectric testing and other tests are necessary on them. This does not seem to be the intention of the SDT. The intention of the SDT seems to be to verify that the sensing devices are delivering acceptable signals to relays. Table 1 a of the PRC-005-2 standard includes: Voltage & Current Sensing Devices / 12 Calendar Years / Verify proper functioning of the current and voltage circuit inputs from the voltage and current sensing devices to the protective relays. The FAQ for PRC-005-2 is even clearer in stating that ensuring the protection system is receiving the expected values from current and voltage sensing devices. The definitions are still including the devices themselves and not their outputs. To make the definition less ambiguous with PTs and CTs, Constellation proposes the following change in the definition: Voltage and current sensing devices providing inputs to protective relays to; Voltage and current sensing device output circuits and the associated circuits to the inputs of protective relays.
Response: The SDT believes your comment is aimed at revising the definition so that it achieves a particular outcome when applied to specific requirements in the proposed PRC-005. The team is trying to develop a definition that would be applicable for use in several standards, and does not want to make modifications to the definition that would limit the term's applicability.				
5	Dynegy Inc.	Dan Roethemeyer	Affirmative	Please clarify "non-battery-based dc supply". It is vague.
Response: The SDT appreciates your support, and believes the current draft of the definition as balloted is clear, concise, and supported by industry. The term “non-battery-based dc supply” is meant to be a broad term to capture other methods such as flywheels, compressed air, fuel cells, or any other emerging technology which is capable of supplying dc power to the Protection System.				

Segment	Entity	Member	Ballot	Comments
5	Indeck Energy Services, Inc.	Rex A Roehl	Negative	Neither batteries nor battery chargers are part of protection systems. They may be included in protection system maintenance procedures, but are not part of a protection system. Similarly, current and voltage measuring devices that are used for metering or monitoring and not exclusively for protection, are not part of the protection system, but may be included in protection system maintenance. THE SDT seems to have tried to incorporate some of the PRC standards with this definition rather than focusing on the one element being defined.
Response: When the Board of Trustees was asked to approve an interpretation of PRC-005-1 that was written by the PSMT SDT, the board acknowledged the reliability gap identified by the drafting team caused by the definition of "protection system" not including battery chargers, and directed that work to close this reliability gap should be given "priority." To close this reliability gap the BOT has directed that revised definition be applied to PRC-005-1 as soon as practical - not years from now.				
5	Liberty Electric Power LLC	Daniel Duff	Negative	Battery chargers are not protection system elements. This part of the definition should be redacted.
Response: When the Board of Trustees was asked to approve an interpretation of PRC-005-1 that was written by the PSMT SDT, the board acknowledged the reliability gap identified by the drafting team caused by the definition of "protection system" not including battery chargers, and directed that work to close this reliability gap should be given "priority." To close this reliability gap the BOT has directed that revised definition be applied to PRC-005-1 as soon as practical - not years from now.				
5	Public Utility District No. 1 of Lewis County	Steven Grega	Negative	Do not support the expanded definition of the protection system. Battery chargers are not part of the protection system.
Response: : When the Board of Trustees was asked to approve an interpretation of PRC-005-1 that was written by the PSMT SDT, the board acknowledged the reliability gap identified by the drafting team caused by the definition of "protection system" not including battery chargers, and directed that work to close this reliability gap should be given "priority." To close this reliability gap the BOT has directed that revised definition be applied to PRC-005-1 as soon as practical - not years from now.				

Segment	Entity	Member	Ballot	Comments
5 6	RRI Energy	Thomas J. Bradish Trent Carlson	Negative	It is not appropriate to define the battery or chargers as protection system elements. For DC circuits or supply, the definition and subsequent boundary of the protection system should end at the fuses or circuit breakers of the sources supplying the individual DC control circuits of the protection system. For a typical power plant station battery, the percent of the battery capacity sized for the protection system is very small. The battery and chargers are power source elements, not protection elements. Likewise, all intermediate power distribution elements between the battery, chargers, and dedicated protection system branch circuits, do not belong in the definition of the Protection System.
Response: : When the Board of Trustees was asked to approve an interpretation of PRC-005-1 that was written by the PSMT SDT, the board acknowledged the reliability gap identified by the drafting team caused by the definition of "protection system" not including battery chargers, and directed that work to close this reliability gap should be given “priority.” To close this reliability gap the BOT has directed that revised definition be applied to PRC-005-1 as soon as practical - not years from now.				
5	TransAlta Centralia Generation, LLC	Joanna Luong-Tran	Negative	To increase the clarity of the definition, TransAlta proposes the following: Control circuitry associated with protective functions through to and including the trip coil(s) of the circuit breakers or other interrupting devices
Response: The SDT believes the current draft of the definition as balloted is clear, concise, and supported by industry.				

Segment	Entity	Member	Ballot	Comments
8	SPS Consulting Group Inc.	Jim R Stanton	Negative	The term "Communication System" remains in the definition, despite the reality that at least for most generators, there is no communication system within the Protection System. Communication from device to device, such as a protective relay to a trip coil or alarm, it not a "system" per se but merely a wire connecting the devices. Keeping this definition as is perpetuates the confusion of generators when they design, modify and execute their protection system maintenance and testing program as the definition of the Protection System requires addressing a "communication system" which they do not have. Keeping the definition as is could lead to confused auditors who insist on literal adherence to the requirement language, clouding the audit and imposing ad hoc and perhaps inconsistent interpretations for audits, spot checks and self reports. What will most surely happen if this definition is approved is a quick request for interpretation by one or more entities seeking clarification on the requirement to include "communication systems" within their maintenance and testing program when they in fact have no such system. All this can be avoided by changing the term "communication systems" to "communication components." This is a primary example of fixing something on the front end so we don't have to go through interpretations and revisions to fix an ambiguity. This definition would also not pass a Quality Review due to the ambiguity of terms.
Response: The SDT believes the language is clear and addresses relay communication systems currently used by industry.				
8	Utility Services, Inc.	Brian Evans-Mongeon	Negative	While the language by itself is supportable, the definition is not complete. The SDT has still not addressed the question of when the definition will apply to Distribution Providers. Many DPs own and or operate the elements listed in the definition; however, the definition lacks clarity when such ownership or operation is subject to the performance obligations under the standard.
Response: This clarification is provided in each requirement that uses the term, “Protection System” by identifying the responsible entity. The comment relates to "application" of the definition, not to the definition.				

Segment	Entity	Member	Ballot	Comments
9	California Energy Commission	William Mitchell Chamberlain	Affirmative	The proposed definition is generally acceptable. However, a slight modification to the third bullet in the definition would be an improvement to the proposed wording: "DC supply sources affecting the 'Protection System' (including station batteries, battery chargers, and non-battery-based dc supply), and " In addition, a definition of non-battery-based dc supply should be included to avoid confusion we recommend the following: "The inverter or rectifier in the circuit, dependent upon how the end use equipment is designed. Uninterruptible power supply (UPS) such as on-line, line-interactive or standby that some of the protection system could be on."
Response: The SDT appreciates your support. The SDT believes the current draft of the definition as balloted is clear, concise, and supported by industry. The term “non-battery-based dc supply” is meant to be a broad term to capture other methods such as flywheels, compressed air, fuel cells, or any other emerging technology which is capable of supplying dc power to the Protection System.				
9	Oregon Public Utility Commission	Jerome Murray	Affirmative	Although I voted yes, I recommend the following proposed wording for the third bullet: DC supply sources affecting the "Protection System" (including station batteries, battery chargers, and non-battery-based dc supply), and Also the definition of non-battery-based dc supply should be included to avoid confusion. I recommend the following: The inverter or rectifier in the circuit, dependent upon how the end use equipment is designed. Uninterruptible power supply (UPS) such as on-line, line-interactive or standby that some of the protection system could be on.
Response: The SDT appreciates your support. The SDT believes the current draft of the definition as balloted is clear, concise, and supported by industry. The term “non-battery-based dc supply” is meant to be a broad term to capture other methods such as flywheels, compressed air, fuel cells, or any other emerging technology which is capable of supplying dc power to the Protection System.				
10	Midwest Reliability Organization	Dan R. Schoenecker	Affirmative	Suggest the second bullet language replace the term correct with the intended. Communications systems necessary for the intended operation of protective functions.
Response: The SDT appreciates your support. The SDT believes the current draft of the definition as balloted is clear, concise, and supported by industry.				

Segment	Entity	Member	Ballot	Comments
10	Western Electricity Coordinating Council	Louise McCarren	Affirmative	The definition is generally acceptable. However, we believe that better language for the third bullet is as follows: DC supply sources affecting the "Protection System" (including station batteries, battery chargers, and non-battery-based dc supply), and A definition of non-battery-based dc supply should be included to avoid confusion and we offer the following: The inverter or rectifier in the circuit, dependent upon how the end use equipment is designed. Uninterruptible power supply (UPS) such as on-line, line-interactive or standby that some of the protection system could be on. The intent of the suggestion would consider that the entire protection system has to operate in order to maintain the reliability of the BES. An example would be if the protective relay and associated communications were on a UPS system and the intended device to operate were on station batteries, this would be the best case scenario as the Micro processors relays and the newer associated communications do not like the voltage drop when the station switches to the station batteries, hence the use of UPS options. Micro processors relays do have internal battery backup to keep them up and running, though a maintenance task would have to be included to be sure that they are properly maintained and tested, so the UPS option is easier and has been kind of an industry standard in the past. In the end the UPS would have to be on a maintenance schedule also.
Response: The SDT appreciates your support. The SDT believes the current draft of the definition as balloted is clear, concise, and supported by industry. The term “non-battery-based dc supply” is meant to be a broad term to capture other methods such as flywheels, compressed air, fuel cells, or any other emerging technology which is capable of supplying dc power to the Protection System.				

NERC
NORTH AMERICAN ELECTRIC RELIABILITY CORPORATION

Consideration of Comments on Protection System Maintenance [Project 2007-17]

The Protection System Maintenance Drafting Team thanks all commenters who submitted comments on the 3rd draft of the standard for Protection System Maintenance and Testing. These standards were posted for a 30-day public comment period from November 17, 2010 through December 17, 2010. The stakeholders were asked to provide feedback on the standards through a special Electronic Comment Form. There were 44 sets of comments, including comments from more than 81 different people from approximately 82 companies representing 9 of the 10 Industry Segments as shown in the table on the following pages.

http://www.nerc.com/filez/standards/Protection_System_Maintenance_Project_2007-17.html

Extensive changes were made to Requirements R1 and R3 of the Standard, and also to the Tables referenced within the Requirements. Of particular note, Requirement R1, Part 1.5 (which required entities to define their acceptance criteria for maintenance of components), and the associated discussion within Requirement R4, Part 4.2 were removed. Requirement R2 was removed because it was duplicative of Requirement R1, Part 1.4. Also, Table 1-4, addressing maintenance of Station DC Supply, was split into six separate sub-tables addressing the various specific technologies within this component.

Some commenters continued to object to various requirements within the standard. Where the standard was not revised in response to these comments, the SDT explained their rationale within the consideration-of-comments.

Based on the level of consensus on this posting, the SDT will post the Standard and associated documents for an additional 30-day comment period with concurrent ballot in the final 10-days of that comment period.

If you feel that your comment has been overlooked, please let us know immediately. Our goal is to give every comment serious consideration in this process! If you feel there has been an error or omission, you can contact the Vice President and Director of Standards, Herb Schrayshuen, at 609-452-8060 or at herb.schrayshuen@nerc.net. In addition, there is a NERC Reliability Standards Appeals Process.[1]

[1] The appeals process is in the Reliability Standards Development Procedures: http://www.nerc.com/standards/newstandardsprocess.html.

Index to Questions, Comments, and Responses

1. The SDT has restructured the tables to improve clarity, but did not appreciably change the content. Do you agree that the restructured tables are clearer? If not, please provide specific suggestions for improvement….. 9
2. The SDT has modified the VSLs, VRFs and Time Horizons with this posting. Do you agree with the changes? If not, please provide specific suggestions for improvement….. 16
3. The SDT has provided the "Supplementary Reference" document to provide supporting discussion for the Requirements within the standard. Do you have any specific suggestions for improvements?…. 24
4. The SDT has provided the "Frequently-Asked Questions" (FAQ) document to address anticipated questions relative to the standard. Do you have any specific suggestions for improvements?…. 31
5. If you have any other comments on this Standard that you have not already provided in response to the prior questions, please provide them here….....38

Consideration of Comments on Protection System Maintenance [Project 2007-17]

The Industry Segments are:

1 — Transmission Owners
2 — RTOs, ISOs
3 — Load-serving Entities
4 — Transmission-dependent Utilities
5 — Electric Generators
6 — Electricity Brokers, Aggregators, and Marketers
7 — Large Electricity End Users
8 — Small Electricity End Users
9 — Federal, State, Provincial Regulatory or other Government Entities
10 — Regional Reliability Organizations, Regional Entities

Group/Individual		Commenter	Organization	Registered Ballot Body Segment									
				1	2	3	4	5	6	7	8	9	10
1.	Group	David K Thorne	Pepco Holding Inc & Affilates	X									

	Additional Member	Additional Organization	Region	Segment Selection
1.	Carlton Bradshaw	RFC		1
2.	Carl Kinsley	RFC		1
3.	Bob Reuter	RFC		3
4.	Mike Mayer	RFC		3
5.	Jim Petrella	RFC		3

2.	Group	Steve Alexanderson	Pacific Northwest Small Public Power Utility Comment Group			X	X					

	Additional Member	Additional Organization	Region	Segment Selection
1.	Russell Noble	Cowlitz County PUD No. 1	WECC	3, 4, 5
2.	Dave Proebstel	Clallam County PUD	WECC	3
3.	Ronald Sporseen	Blachly-Lane Electric Cooperative	WECC	3
4.	Ronald Sporseen	Central Electric Cooperative	WECC	3
5.	Ronald Sporseen	Consumers Power	WECC	3

Group/Individual		Commenter	Organization		Registered Ballot Body Segment									
					1	2	3	4	5	6	7	8	9	10
6.	Ronald Sporseen	Clearwater Power Company	WECC	3										
7.	Ronald Sporseen	Douglas Electric Cooperative	WECC	3										
8.	Ronald Sporseen	Fall River Rural Electric Cooperative	WECC	3										
9.	Ronald Sporseen	Northern Lights	WECC	3										
10.	Ronald Sporseen	Lane Electric Cooperative	WECC	3										
11.	Ronald Sporseen	Lincoln Electric Cooperative	WECC	3										
12.	Ronald Sporseen	Raft River Rural Electric Cooperative	WECC	3										
13.	Ronald Sporseen	Lost River Electric Cooperative	WECC	3										
14.	Ronald Sporseen	Salmon River Electric Cooperative	WECC	3										
15.	Ronald Sporseen	Umatilla Electric Cooperative	WECC	3										
16.	Ronald Sporseen	Coos-Curry Electric Cooperative	WECC	3										
17.	Ronald Sporseen	West Oregon Electric Cooperative	WECC	3										
18.	Ronald Sporseen	Pacific Northwest Generating Cooperative	WECC	5										
19.	Ronald Sporseen	Power Resources Cooperative	WECC	3										
3.	Group	Dave Davidson	Tennessee Valley Authority		X				X					
	Additional Member	**Additional Organization**	**Region**	**Segment Selection**										
1.	Rusty Hardison	TOM Support	SERC	NA										
2.	Paul Baldwin	TOM Support	SERC	NA										
3.	David Thompson	Hydro Production Engineering	SERC	NA										
4.	Frank Cuzzort	Nuclear Engineering	SERC	NA										
5.	Robert Mares	Fossil Engineering		NA										
4.	Group	Guy Zito	Northeast Power Coordinating Council											X
	Additional Member	**Additional Organization**	**Region**	**Segment Selection**										
1.	Al Adamson	New York State Reliability Council, LLC		10										
2.	Gregory Campoli	New York Independent System Operator	NPCC	2										
3.	Kurtis Chang	Independent Electricity System Operator	NPCC	2										
4.	Chris de Graffenried	Consolidated Edison Co. of New York, Inc.	NPCC	1										
5.	Sylvain Clermont	Hydro-Quebec TransEnergie	NPCC	1										

Group/Individual		Commenter	Organization	Registered Ballot Body Segment									
				1	2	3	4	5	6	7	8	9	10
6.	Gerry Dunbar	Northeast Power Coordinating Council	NPCC 10										
7.	Dean Ellis	Dynegy Generation	NPCC 5										
8.	Brian Evans-Mongeon	Utility Services	NPCC 8										
9.	Mike Garton	Dominion Resources Services, Inc.	NPCC 5										
10.	Brian L. Gooder	Ontario Power Generation Incorporated	NPCC 5										
11.	Kathleen Goodman	ISO - New England	NPCC 2										
12.	Chantel Haswell	FPL Group, Inc.	NPCC 5										
13.	David Kiguel	Hydro One Networks Inc.	NPCC 1										
14.	Michael R. Lombardi	Northeast Utilities	NPCC 1										
15.	Randy MacDonald	New Brunswick System Operator	NPCC 2										
16.	Bruce Metruck	New York Power Authority	NPCC 6										
17.	Lee Pedowicz	Northeast Power Coordinating Council	NPCC 10										
18.	Robert Pellegrini	The United Illuminating Company	NPCC 1										
19.	Si Truc Phan	Hydro-Quebec TransEnergie	NPCC 1										
20.	Saurabh Saksena	National Grid	NPCC 1										
21.	Michael Schiavone	National Grid	NPCC 1										
22.	Peter Yost	Consolidated Edison Co. of New York, Inc.	NPCC 3										
5.	Group	Deborah Schaneman	Platte River Power Authority System Maintenance	X		X		X	X				

Additional Member	Additional Organization	Region	Segment Selection
1.	Scott Rowley	Platte River Power Authority	WECC	1, 3, 5, 6
2.	Gary Whittenberg	Platte River Power Authority	WECC	1, 3, 5, 6
3.	Aaron Johnson	Platte River Power Authority	WECC	1, 3, 5, 6

6.	Group	Mike Garton	Electric Market Policy	X		X		X	X				
7.	Group	Denise Koehn	Bonneville Power Administration	X		X		X	X				

Group/Individual		Commenter	Organization	Registered Ballot Body Segment									
				1	2	3	4	5	6	7	8	9	10
8.	Group	Terry L. Blackwell	Santee Cooper	X		X		X	X				
9.	Group	Mallory Huggins	NERC Staff										
10.	Group	Sam Ciccone	FirstEnergy	X		X		X	X				
11.	Group	Frank Gaffney	Florida Municipal Power Agency	X		X	X	X	X	X			
12.	Group	Kenneth D. Brown	PSEG Companies ("Public Service Enterprise Group Companies")	X		X		X	X				
13.	Group	Carol Gerou	MRO's NERC Standards Review Subcommittee										X
14.	Individual	Brandy A. Dunn	Western Area Power Administration	X									
15.	Individual	Joanna Luong-Tran	TransAlta Centralia Generation Partnership					X					

Group/Individual		Commenter	Organization	Registered Ballot Body Segment									
				1	2	3	4	5	6	7	8	9	10
16.	Individual	Silvia Parada Mitchell	NextEra Energy	X		X		X	X				
17.	Individual	Reza Ebrahimian	City of Austin DBA Austin Energy				X						
18.	Individual	Sandra Shaffer	PacifiCorp	X		X		X	X				
19.	Individual	JT Wood	Southern Company Transmission	X		X							
20.	Individual	Jack Stamper	Clark Public Utilities	X									
21.	Individual	John Bee	Exelon	X				X					
22.	Individual	Joe Petaski	Manitoba Hydro	X		X		X					
23.	Individual	Dan Roethemeyer	Dynegy Inc.					X					
24.	Individual	Darryl Curtis	Oncor Electric Delivery Company LLC	X									
25.	Individual	Michelle D'Antuono	Ingleside Cogeneration LP					X					
26.	Individual	Scott Berry	Indiana Municipal Power Agency				X						
27.	Individual	RoLynda Shumpert	South Carolina Electric and Gas	X		X		X	X				
28.	Individual	Ed Davis	Entergy Services	X		X		X	X				
29.	Individual	Greg Rowland	Duke Energy	X		X		X	X				
30.	Individual	Dale Fredrickson	Wisconsin Electric Power Company			X	X	X					
31.	Individual	Dan Rochester	Independent Electricity System Operator		X								

Group/Individual		Commenter	Organization	Registered Ballot Body Segment									
				1	2	3	4	5	6	7	8	9	10
32.	Individual	Thad Ness	American Electric Power	X		X		X	X				
33.	Individual	Michael Moltane	ITC	X									
34.	Individual	Kathleen Goodman	ISO New England Inc.		X								
35.	Individual	Rick Koch	Nebraska Public Power District	X		X		X					
36.	Individual	Armin Klusman	CenterPoint Energy	X									
37.	Individual	Andrew Pusztai	American Transmission Company	X									
38.	Individual	Eric Salsbury	Consumers Energy			X	X	X					
39.	Individual	Bill Shultz	Southern Company Generation	X		X		X	X				
40.	Individual	Martin Bauer	US Bureau of Reclamation					X					
41.	Individual	Kenneth A. Goldsmith	Alliant Energy				X						
42.	Individual	Martyn Turner	LCRA Transmission Services Corporation	X									
43.	Individual	Terry Harbour	MidAmerican Energy	X		X		X	X				
44.	Individual	Kirit Shah	Ameren	X		X		X	X				

1. The SDT has restructured the tables to improve clarity, but did not appreciably change the content. Do you agree that the restructured tables are clearer? If not, please provide specific suggestions for improvement.

Summary Consideration: Generally, commenters indicated that the rearrangement of the Tables was beneficial. Several commenters questioned the arrangement of Table 1-4 and the SDT responded by revising this Table. A few commenters suggested further rearrangement of the Tables; the SDT observed that there are many potential ways to organize the Tables and declined to adopt these suggestions. The SDT made minor changes to Table 1-3 and Table 2 verbiage based on stakeholder comments.

Organization	Yes or No	Question 1 Comment
Pepco Holding Inc & Affiliates	Yes	
Pacific Northwest Small Public Power Utility Comment Group	Yes	
Tennessee Valley Authority	Yes	
Northeast Power Coordinating Council	No	The wording “Component Type” is not necessary in each title. Just the equipment category should be listed--what is now shown as “Component Type - Protective Relay”, should be Protective Relay. However, Protective Relay is too general a category. Electromechanical relays, solid state relays, and microprocessor based relays should have their own separate tables. So instead of reading Protective Relay in the title, it should read Electromechanical Relays, etc. This will lengthen the standard, but will simplify reading and referring to the tables, and eliminate confusion when looking for information. The “Note” included in the heading is also not necessary. “Attributes” is also not necessary in the column heading, “Component” suffices.
Response: Thank you for your comments. The SDT believes that the table headings are appropriate as reflected in the draft standard.		
Platte River Power Authority System Maintenance	Yes	
Electric Market Policy	Yes	Dominion does not feel that clarity has been added to the tables. 1. A numbering structure should be added to the table for referencing each task prescribed.

Organization	Yes or No	Question 1 Comment
		2. The tables should more clearly designate and separate time based versus performance based tasks. 3. Additionally, Table 1-4 contains, in several places, an activity to "Verify that the station battery can perform as designed by evaluating the measured cell/unit internal ohmic values to station battery baseline." This seems to suggest that each time the batteries are checked, the measured cell/unit internal ohmic value should agree with some baseline value. This appears to be overly prescriptive as the values reading-to-reading should fall within the tolerances established per Requirement R1.5, not equal a baseline. The activities for other component types are not this prescriptive.
Response: Thank you for your comments. **1. The SDT believes that numbering the tasks within the Tables as you suggest would make the Tables more complex and would not add clarity.** **2. Performance-based maintenance requires that the same tasks be completed, but at intervals determined per Attachment A.** **3. The station battery baseline value is up to the entity to determine. Please see Section 15.4.1 of the Supplementary Reference for a discussion of this. The SDT has determined that the fundamental concerns of R1 part 1.5 and the associated changes are addressed within the PSMP definition, and that R1 part 1.5 is not necessary; therefore, it has been removed. Requirement R4 has also been re-drafted to address various related concerns noted within comments. The associated VSL has also been revised. Please see Supplementary Reference Document, Section 8 for a discussion of this.**		
Bonneville Power Administration	Yes	
Santee Cooper	Yes	
NERC Staff	Yes	
FirstEnergy	Yes	While we agree that the clarity of the tables has improved, there are still items that warrant further clarity. 1.In Table 1-1, references to "Verify acceptable measurement of power system input values" is made for microprocessor relays on 6 and 12 calendar year intervals. Wouldn't this also be prudent on non-microprocessor based relays as well on the 6 year interval? 2. Also, in Table 1-3, "Verify that acceptable measurement of the current and voltage signals are received by the protective relays" is shown on a 12 calendar year interval. What is the difference between this activity and the similar activity performed in Table 1-1? 3. In Table 1-4, this table is complex and the detailed maintenance activities in this particular table is puzzling when compared to the more generic detail in the other tables within this section. For example, an incorrect operation due to a deteriorated signal from a CT or VT has a higher probability than a failure of a battery bank

Organization	Yes or No	Question 1 Comment
		to perform when called upon. 4. In Table 1-5, Please provide clarity on the "Unmonitored Control circuitry associated with protective functions" component attribute. This would most likely be an FAQ item.
Response: Thank you for your comments. **1. For non-microprocessor relays, this activity is fundamentally performed as a part of the calibration process.** **2. This activity is used to verify the performance of the voltage and current sensing devices, where the activity in Table 1-1 is used to verify that the protective relay is performing properly. In some cases, the activity in Table 1-1 may also serve to satisfy the requirement in Table 1-3.** **3. Table 1-4 is more detailed than the other tables because of the variability in the technologies of the station dc supply.** **4. The draft definition of Protection System establishes "Control circuitry" as "…control circuitry associated with protective functions through the trip coil(s) of the circuit breakers or other interrupting devices". Please see Section 15.3 of the Supplementary Reference for a discussion of this.**		
Florida Municipal Power Agency	Yes	
PSEG Companies ("Public Service Enterprise Group Companies")	Yes	
MRO's NERC Standards Review Subcommittee	Yes	
Western Area Power Administration	Yes	
TransAlta Centralia Generation Partnership	Yes	
NextEra Energy	Yes	
City of Austin DBA Austin Energy		
PacifiCorp	Yes	

Organization	Yes or No	Question 1 Comment
Southern Company Transmission	Yes	The Standard Drafting Team should be commended for making the tables much easier to understand
Response: Thank you for your support.		
Clark Public Utilities	No	The SDT has greatly improved the clarity of this document in the areas of relays, communication systems, voltage and current sensing devices, control circuitry, and alarming paths. The recommendations on station dc supply are still confusing. First, there are five different attribute categories for unmonitored dc supply. Are these five categories mutually exclusive? Are we supposed to follow just the category applicable to the type of battery? Are we supposed to follow the first category and any of the subsequent four battery type categories as they apply? I suspect some of the 3 month and 18 month items in the first category are considered to be necessary by the SDT regardless of battery type. The current categorization is confusing. If we are required to perform the 3 month and 18 month activities listed in the first category regardless of battery type AS WELL AS the other applicable battery type activities, please indicate this in Table 1-4. As a different option, just eliminate the first category entirely and place the appropriate 3 month and 18 month verification and inspection requirements in the four battery type specific categories. It may be repetitive but clarity is paramount in this standard. Second, the FAQ examples seem to indicate that the SDT views the performance of an internal ohmic battery test or a battery performance test as valid forms for verifying the individual battery cell states (i.e. state of charge of the individual battery cells/units, battery continuity, battery terminal connection resistance, and battery internal cell-to-cell or unit-to-unit connection resistance). It would be helpful if this were more obviously stated in table 1-4. Currently it could be interpreted that we need to do all of the individual cell-cell verification in addition to the ohm test or the full performance test. I don't believe this is the intent of the SDT (based on the FAQ examples) but we need to see the intent in Table 1-4.Third, does a monitored dc supply have to monitor some or all of each of the different line items listed? The FAQ examples indicate that if only some are monitored, the dc supply can still be treated as monitored as long as the unmonitored items are verified. This means that for a VLA battery with a low voltage alarm and unintentional ground alarm, all that is needed is to check electrolyte level every 3 months, check float voltage and battery rack every 18 months and perform either an internal ohm check at 18 months or a battery performance test at 6 years. Also battery alarms need to be verified at 6 years. This is not clear in Table 1-4 and it could be interpreted by some that a monitored station dc supply monitors ALL of the listed items not just SOME. The FAQs imply that partial monitoring is acceptable but Table 1-4 does not indicate this very clearly. I do wish to say once again that this proposed standard is much easier to understand and that with a little more clarification in the dc supply section I would vote in the affirmative.
Response: Thank you for your comments. Table 1-4 has been modified in consideration of your comments. Specifically, Table 1-4 has been revised to		

Organization	Yes or No	Question 1 Comment
remove "state of charge" from the activities.		
Exelon		
Manitoba Hydro	No	The maintenance requirements for batteries listed in Table 1-4 do not appear to be consistent with example 1 in Section V, 1A of the FAQ. Specifically the FAQ does not mention the state of charge of the individual battery cells/units, the battery continuity, the battery terminal connection resistance, the battery internal cell-to-cell or unit-to-unit connection resistance, or the cell condition, which are indicated as 18 month interval tasks in table 1-4.
Response: Thank you for your comments. The SDT decided to eliminate the FAQ document and incorporate the FAQ's contents into the Supplementary Reference Document as appropriate. The SDT considered your comments during this activity. Table 1-4 has been revised to remove "state of charge" from the activities.		
Dynegy Inc.	Yes	
Oncor Electric Delivery Company LLC	Yes	
Ingleside Cogeneration LP	Yes	The tables clearly tie to each component type in a Protection System. This is consistent with the required PSMP format, making it straight forward to incorporate the intervals and to demonstrate compliance.
Response: Thank you for your support.		
Indiana Municipal Power Agency	Yes	
South Carolina Electric and Gas	Yes	
Entergy Services	No	The tables are generally much clearer and the SDT is to be commended on their efforts. However, we believe the Alarming Point Table needs additional clarification with regard to the Maximum Maintenance Interval. If an "alarm producing device" is considered to be a device such as an SCADA RTU, individual entity intervals for such a device would differ, and there isn't necessarily a maximum interval established as there is for Protection System components. Also, if an entity's alarm producing device maintenance is performed in sections and triggered by segment or component maintenance, there would essentially be multiple maximum intervals for the alarm producing

Organization	Yes or No	Question 1 Comment
		device of that entity. On that basis, we suggest the interval verbiage be revised to "When alarm producing device or system is verified, or by sections as per the monitored component/protection system specified maximum interval as applicable". Alternately, if the intention is to establish maximum intervals as simply being no longer than the individual component maintenance intervals as we suggest for inclusion above, then the verbiage should be revised to "When alarm producing component/protection system segment is verified". In either case are we to interpret monitored components with attributes which allow for no periodic maintenance specified as not requiring periodic alarm verification?
Response: Thank you for your comments. For clarity, the 'Maximum Maintenance Interval' column entry in Table 2 has been revised to state, "When alarm producing Protection System component is verified".		
Duke Energy	Yes	
Wisconsin Electric Power Company	Yes	
Independent Electricity System Operator		
American Electric Power	No	1. Table 1.5 (Control Circuitry), row 4, indicates a maximum interval of 12 years for unmonitored control circuitry, yet other portions of control circuitry have a maximum interval of 6 years. AEP does not understand the rationale for the difference in intervals, when in most cases, one verifies the other. 2. Also, unmonitored control circuitry is capitalized in row 4 such that it infers a defined term. 3. In the first row of table 1-4 on page 16, it is difficult to determine if it is a cell that wraps from the previous page or is a unique row. This is important because the Maximum Maintenance Intervals are different (i.e. 18 months vs. 6 years). It is difficult to determine to which elements the 6 year Maximum Maintenance Interval applies. 4. AEP suggests repeating the heading "Monitored Station dc supply (excluding UFLS and UVLS) with: Monitor and alarm for variations from defined levels (See Table 2):" for the bullet points on this page.
Response: Thank you for your comments. **1. The 6-year activities are all related to components with "moving parts", and the 12-year activities are related to the other portions of the control**		

Organization	Yes or No	Question 1 Comment
circuitry. **2. The capitalized term has been corrected.** **3. Table 1-4 has been modified in consideration of your comments.** **4. Table 1-4 has been modified in consideration of your comments.**		
ITC	Yes	The following question concerns Table 1-3. 1. Our testing program includes "impedance testing" of the current transformers (CTs) along with insulation testing of the wiring and CT secondary. Impedance testing involves impressing an increasing voltage on the secondary of the CT (with primary open circuited) until 1 (one) ampere flows. This method determines the "knee" of the saturation curve that is used as a benchmark for comparison to previous testing and other CTs. This procedure has successfully identified CT problems over the past several decades. We believe this procedure to be adequate. Does the SDT agree that this method is sufficient to meet the testing requirements of Table 1-3 and that a current comparison is not needed in addition to this testing? 2. Another variation of this is for voltage device compliance. Table 1-3 indicates that we should verify the correct voltages are received by the relay. This means that the VT would need to be energized and we would measure the secondary voltages to compare with others. Power plant relay testing is normally performed during plant outages when this measurement cannot be done. Some plants do not allow any testing while the unit is on line. It would seem that the standard would be written to allow some other type of testing to be performed other than the measurement test. 3. For Table 1-1 Row 1, we believe the intent is to verify that settings are as specified for non-microprocessor relays and microprocessor relays alike. If this is the case, consider adding "Verify that settings are as specified" as a bullet under the headings for non-microprocessor relays and microprocessor relays. 4. Splitting the tables into separate sections for Protective Relays, Communication Systems, VT and CTs, and Station D.C. Supply helped the clarity.
Response: Thank you for your comments. **1. Table 1-3 has been revised in consideration of your comments. Also, please see Section 15.3 of the Supplementary Reference Document. The SDT has decided to eliminate the FAQ and incorporate topics and discussion from the FAQ within the Supplementary Reference Document. Your comments will be considered within that activity.** **2. Table 1-3 has been revised in consideration of your comments. Also, please see Section 15.3 of the Supplementary Reference Document. The SDT has decided to eliminate the FAQ and incorporate topics and discussion from the FAQ within the Supplementary Reference Document. Your comments will be considered within that activity.**		

Organization	Yes or No	Question 1 Comment
3. "Verify that settings are as specified" is specified as an activity that applies to all Protective Relays, regardless of technology. The SDT has decided to eliminate the FAQ and incorporate topics and discussion from the FAQ within the Supplementary Reference Document. Your comments will be considered within that activity. **4. Thank you for your support.**		
ISO New England Inc.	No	The wording "Component Type" is not necessary in each title. Just the equipment category should be listed--what is now shown as "Component Type - Protective Relay", should be Protective Relay. However, Protective Relay is too general a category. Electromechanical relays, solid state relays, and microprocessor based relays should have their own separate tables. So instead of reading Protective Relay in the title, it should read Electromechanical Relays, etc. This will lengthen the standard, but will simplify reading and referring to the tables, and eliminate confusion when looking for information. The "Note" included in the heading is also not necessary. "Attributes" is also not necessary in the column heading, "Component" suffices.
Response: Thank you for your comments. The SDT believes that the table headings are appropriate as reflected in the draft standard.		
Nebraska Public Power District	Yes	
CenterPoint Energy	Yes	
American Transmission Company	Yes	
Consumers Energy	Yes	
Southern Company Generation	Yes	
US Bureau of Reclamation		No Comment
Alliant Energy	Yes	
LCRA Transmission Services Corporation	No	1. It would help to add a column to the left labeled Category. I.E. a relay could be classified under Category 1 attributes unmonitored or Cat 2, Cat 3. 2. Table 1-4, Station DC is very difficult to follow.

Organization	Yes or No	Question 1 Comment
Response: Thank you for your comments. **1. The SDT believes that the table headings are appropriate as reflected in the draft standard.** **2. Table 1-4 has been modified in consideration of your comments.**		
MidAmerican Energy	Yes	
Ameren	Yes	
Xcel Energy	Yes	

2. The SDT has modified the VSLs, VRFs and Time Horizons with this posting. Do you agree with the changes? If not, please provide specific suggestions for improvement.

Summary Consideration: Several commenters objected to the "percentage" steps in several VSLs. The SDT observes that the 'percentage' steps follow the VSL Guidelines which can be found on the NERC website in the 'Resource Documents' area of the 'Reliability Standards' section. Other commenters requested that the VSLs permit some level of non-compliance before incurring a 'Low' VSL, again the SDT notes that this is not acceptable per the VSL Guidelines.

Organization	Yes or No	Question 2 Comment
Pepco Holding Inc & Affiliates	Yes	
Pacific Northwest Small Public Power Utility Comment Group	Yes	
Tennessee Valley Authority	No	1. There is no allowance for deferral of maintenance because of factors beyond the control of the TO, GO, or DP. These include the unavailability of customer outages, generation outages, system configuration, high risk of loss of generation or customer load or impact to power quality. Proposed Change: Provide a process for acceptable deferral of maintenance activities. 2. Table 1-4 The requirement to perform cell internal ohmic resistance measurements every 18 months for vented lead-acid batteries is excessive. Our normal battery life is 20+ years. A 3-year internal resistance test frequency is adequate to prove battery integrity. IEEE 1188 recommends verification of internal ohmic resistance to be on a quarterly basis. It appears other intervals take into account recommended inspection interval plus some grace period. Proposed Change: Change maintenance interval from 3 months to 6 months. 3. Section: R1.5 This new requirement will require significant documentation with no known improvement to the reliability of the BES. What data is being used to determine the need for this requirement? How far does this requirement go? 4. Table 1-4 requires the inspection of "physical condition of battery rack" What are "identify calibration tolerance or other equivalent parameters" for this task? You already have verified, test, inspect, and calibrate defined. Leave out R1.5 which requires more than meeting the definitions.
Response: Thank you for your comments.		

Organization	Yes or No	Question 2 Comment
1. FERC Order 693 directs NERC to establish maximum allowable intervals. A "deferral process" would not satisfy this directive. **2. The SDT disagrees, and believes that 18-months is the proper interval for this activity.** **3. The SDT has determined that the fundamental concerns of R1 part 1.5 and the associated changes are addressed within the PSMP definition, and that Requirement R1, Part 1.5 is not necessary; therefore, it has been removed. Requirement R4 has also been re-drafted to address various related concerns noted within comments. Please see Supplementary Reference Document, Section 8 for a discussion of this. The associated VSL has also been revised.** **4. The SDT has determined that the fundamental concerns of R1 part 1.5 and the associated changes are addressed within the PSMP definition, and that Requirement R1, Part 1.5 is not necessary; therefore, it has been removed. Requirement R4 has also been re-drafted to address various related concerns noted within comments. The associated VSL has also been revised. Please see Supplementary Reference Document, Section 8 for a discussion of this.**		
Northeast Power Coordinating Council	No	1. Because all the requirements deal with protective system maintenance and testing, violations could directly cause or contribute to bulk electric system instability, etc., the VRFs should all be "High". 2. The Time Horizons should all be "Operations Planning" because of the immediacy of a failure to meet the requirements. 3. For the R1 Lower VSL, include a second part to read: Failed to identify calibration tolerances or other equivalent parameters for one Protection System component type that establish acceptable parameters for the conclusion of maintenance activities. For the R1 Moderate VSL, suggest similar wording as for the Lower VSL but specifying two Protection System component types. For the R1 High VSL, suggest changing the wording of the 3rd part to be similar to the Lower VSL to match the requirement and to cater for more than two Protection System component types. 4. For the R3 Severe VSL, in part 3, replace "less" with fewer.
Response: Thank you for your comments. **1. Consideration of the VRFs, in association with the VRF Guidelines, yields the VRFs as established within the draft Standard.** **2. The SDT has reviewed the time horizons, and feels that R1 is properly assigned a Long-Term Planning time horizon, as the activities to develop a program and to determine the monitoring attributes of components is performed within the related time period. The SDT had concluded that Requirement R2 is redundant with Requirement R1, Part 1.4, and has deleted R2 (together with the associated Measure and VSL).** **3. The SDT has determined that the fundamental concerns of R1 part 1.5 and the associated changes are addressed within the PSMP definition, and that Requirement R1, Part 1.5 is not necessary; therefore, it has been removed. The associated VSL has also been revised.** **4. The SDT believes that your suggestion is similar to the existing text, and declines to modify the standard.**		

Organization	Yes or No	Question 2 Comment
Platte River Power Authority System Maintenance	No	The 5%, 10%, and 15% levels for R2 & R4 exaggerate the severity levels for small companies. A small DP with only 9 relays in a protection system would only have to be missing 1 record for a severe VSL.
Response: Thank you for your comments. The percentage levels for Requirement R4 are consistent with many other NERC Standards and are also consistent with the guidance within the VSL Guidelines. The SDT concluded that Requirement R2 was redundant with Requirement R1, Part 1.4, and deleted Requirement R2 (together with the associated Measure and VSL).		
Electric Market Policy	No	VSL R3. How do you measure a percentage of countable events over a period of time? How are you to determine what the total population to be considered? An entity should not be penalized if they are following their program, correcting issues, and documenting all actions, even if there is a high failure rate in an instance.
Response: Thank you for your comments. Attachment A, to which Requirement R3 refers, specifies that countable events are assessed on the basis of " for the greater of either the last 30 components maintained or all components maintained in the previous year."		
Bonneville Power Administration	Yes	
Santee Cooper		
NERC Staff		
FirstEnergy	No	The VSL for R2 need to be adjusted since "Condition Based Maintenance" has been removed from the standard.
Response: Thank you for your comments. The SDT concluded that Requirement R2 was redundant with Requirement R1, Part 1.4, and deleted Requirement R2 (together with the associated Measure and VSL).		
Florida Municipal Power Agency	No	The VRF of R1 should be Low since the attached tables are essentially the PSMP.
Response: Thank you for your comments. The SDT disagrees; the Tables establish the intervals and activities, and Requirement R1 addresses the establishment of an entities' individual PSMP.		
PSEG Companies ("Public Service Enterprise Group Companies")		No comment

Organization	Yes or No	Question 2 Comment
MRO's NERC Standards Review Subcommittee	Yes	
Western Area Power Administration	Yes	
TransAlta Centralia Generation Partnership	No	Please provide acronyms list and its explanations in the standard.
Response: Thank you for your comments. In accordance with established NERC custom, acronyms are either established at the first use of the term, or are general acronyms used throughout NERC Standards.		
NextEra Energy	Yes	
City of Austin DBA Austin Energy		
PacifiCorp	Yes	
Southern Company Transmission	No	We disagree with the inclusion of the VSLs, VRFs, and time Horizons associated with the new Requirements 1.5 and 4.2
Response: Thank you for your comments. The SDT determined that the fundamental concerns of Requirement R1, Part 1.5 and the associated changes are addressed within the PSMP definition, and that Requirement R1, Part 1.5 is not necessary; therefore, it has been removed. Requirement R4 has also been re-drafted to address various related concerns noted within comments. The associated VSL has also been revised.		
Clark Public Utilities	Yes	
Exelon		
Manitoba Hydro	No	The high VSL for R1 “Failed to include all maintenance activities relevant for the identified monitoring attributes specified in Tables 1-1 through 1-5” may be interpreted in different ways and should be further clarified.
Response: Thank you for your comments. The SDT does not understand your concern; further details are needed.		

Organization	Yes or No	Question 2 Comment
Dynegy Inc.	No	For R4, the VRF has been changed to high. We question the need to change to high since there are numerous elements that will still protect the system while repairs are being made.
Response: Thank you for your comments. Requirement R4 addresses implementation of the overall PSMP; that is – maintaining all devices within the program. This VRF is consistent with the "high" assigned to R2 of PRC-005-1.		
Oncor Electric Delivery Company LLC	No	Oncor strongly disagrees with the modification to the Violation Severity Levers (VSL) table under the High VSL column where it states that it is a high VSL for "Failed to establish calibration tolerance or equivalent parameters to determine if components are within acceptable parameters." Oncor feels modifying the standard by adding a requirement that requires a Transmission Owner, Generation Owner or Distribution Provider to "identify calibration tolerances or other equivalent parameters for each Protection System component type that establish acceptable parameters for the conclusion of maintenance activities" is too intrusive and divisive for what it brings to the reliability of the BES. The requirement (Requirement R1 part 1.5) and its associated High VSL should be removed from PRC-005-2.
Response: Thank you for your comments. The SDT has determined that the fundamental concerns of Requirement R1, Part 1.5 and the associated changes are addressed within the PSMP definition, and that Requirement R1, Part 1.5 is not necessary; therefore, it has been removed. Requirement R4 has also been re-drafted to address various related concerns noted within comments. The associated VSL has also been revised.		
Ingleside Cogeneration LP		
Indiana Municipal Power Agency	No	IMPA does not agree with the percentage in the VSL table for R4. For smaller entities that have six or less of any one type of Protection System Component and they fail, for whatever reason (even if it's a matter of incomplete documentation), to complete scheduled program maintenance on that component they will be subjected to the severe VSL penalty Matrix. Consideration should be given to entities having less than say, 100 of a component. There should be some type of tiered sub table within the VSL matrix for this consideration - registered entities having a certain component in quantities greater than or equal to 100 and registered entities having quantities of that certain component of less than 100.
Response: Thank you for your comments. The percentage levels within Requirement R4 are consistent with many other NERC Standards, and are also consistent with the guidance within the VSL Guidelines. The SDT concluded that Requirement R2 was redundant with Requirement R1, Part 1.4, and deleted Requirement R2 (together with the associated Measure and VSL).		
South Carolina Electric and Gas	Yes	

Organization	Yes or No	Question 2 Comment
Entergy Services	No	R1.5 calls for "identification of calibration tolerances or equivalent parameters..." whereas the associated VSL references "failure to establish calibration criteria...." and is listed as high. If R1.5 is to be included in this standard, then we suggest the severity level of a failure to simply "identify" or document such calibration tolerances would be analogous to the severity level(s) of a "failure to specify one (or the severity level should be consistent with the other elements of R1. Both cases appear to be more of a documentation issue as opposed to a failure to implement. Shouldn't a failure to implement any necessary calibration tolerance be accounted for in R4?
Response: Thank you for your comments. The SDT has determined that the fundamental concerns of Requirement R1, Part 1.5 and the associated changes are addressed within the PSMP definition, and that Requirement R1, Part 1.5 is not necessary; therefore, it has been removed. Requirement R4 has also been re-drafted to address various related concerns noted within comments. The associated VSL has also been revised.		
Duke Energy	No	1. R1.3 appears to be missing from the VSL for R1. 2. Also, it's unclear to us what the expectation is for compliance documentation for "monitoring attributes and related maintenance activities" in R1.4 and "calibration tolerances or other equivalent parameters" in R1.5. This is fairly straightforward for relays, but not for other component types. 3. R4 - More clarity must be provided on the expectation for compliance documentation. This is a High VRF requirement, and there may only be a small number of maintenance-correctable items, hence a significant exposure to an extreme penalty.
Response: Thank you for your comments. **1. The High VSL for Requirement R1 has been revised in consideration of your comment.** **2. The SDT concluded that Requirement R2 was redundant with Requirement R1, Part 1.4, and deleted R2 (together with the associated Measure and VSL).** **3. Examples of compliance documentation are included within Measure M4 and discussed within Section 15.7 of the Supplementary Reference Document.**		
Wisconsin Electric Power Company		
Independent Electricity System Operator	No	1. R1 Lower - We suggest including a second part as follows: "Failed to identify calibration tolerances or other equivalent parameters for one Protection System component type that establish acceptable parameters for the conclusion of maintenance activities. "

Organization	Yes or No	Question 2 Comment
		2. R1 Moderate - We suggest similar to the Lower VSL but catering for two Protection System component types.R1 High - We suggest changing the wording of the 3rd part to match the requirement and to cater for more than two Protection System component types. 3. Editorial Comment to Severe VSL for R3: In part 3, replace “less” with “fewer”.
Response: Thank you for your comments. **1. The SDT has determined that the fundamental concerns of Requirement R1, Part 1.5 and the associated changes are addressed within the PSMP definition, and that Requirement R1, Part 1.5 is not necessary; therefore, it has been removed. The associated VSL has also been revised.** **2. The ‘Moderate’ VSL for Requirement R1 appears to be similar to the ‘Lower’ VSL for Requirement R1 as you suggest. The SDT believes that, if more than two Protection System component types are not addressed, the ‘Severe’ VSL is appropriate.** **3. Thank you. The SDT elected not to change the VSL for Requirement R3 as suggested.**		
American Electric Power	No	1. The VSL table should be revised to remove the reference to the Standard Requirement 1.5 in the R1 “High” VSL. 2. All four levels of the VSL for R2 make reference to a “condition-based PSMP.” However, no where in the standard is the term “condition-based” used in reference to defining ones PSMP. The VSL for R2 should be revised to remove reference to a condition-based PSMP; alternatively the Standard could be revised to include the term “condition-based” within the Standard Requirements and Table 1. 3. In multiple instances, Table 1 uses the phrase “No periodic maintenance specified” for the Maximum Maintenance Interval. Is this intended to imply that a component with the designated attributes is not required to have any periodic maintenance? If so, the wording should more clearly state “No periodic maintenance required” or perhaps “Maintain per manufacturers recommendations.” Failure to clearly state the maintenance requirement for these components leaves room for interpretation on whether a Registered Entity has a maintenance and testing program for devices where the Standard has not specified a periodic maintenance interval and the manufacturer states that no maintenance is required.
Response: Thank you for your comments. **1. The SDT has determined that the fundamental concerns of Requirement R1, Part 1.5 and the associated changes are addressed within the PSMP definition, and that Requirement R1, Part 1.5 is not necessary; therefore, it has been removed. The associated VSL has also been revised.** **2. The SDT concluded that Requirement R2 is redundant with R1, Part 1.4, and deleted Requirement R2 (together with the associated Measure and VSL).** **3. If the indicated monitoring attributes are present, no “hands-on” periodic maintenance is required, as the monitoring of the component is**		

Organization	Yes or No	Question 2 Comment
providing a continuing indication of its functionality.		
ITC	Yes	
ISO New England Inc.	No	1. Because all the requirements deal with protective system maintenance and testing, violations could directly cause or contribute to bulk electric system instability, etc., the VRFs should all be "High". 2. The Time Horizons should all be "Operations Planning" because of the immediacy of a failure to meet the requirements. 3. For the R1 Lower VSL, include a second part to read: Failed to identify calibration tolerances or other equivalent parameters for one Protection System component type that establish acceptable parameters for the conclusion of maintenance activities. 4. For the R1 Moderate VSL, suggest similar wording as for the Lower VSL but specifying two Protection System component types. 5. For the R1 High VSL, suggest changing the wording of the 3rd part to be similar to the Lower VSL to match the requirement and to cater for more than two Protection System component types. 6. For the R3 Severe VSL, in part 3, replace "less" with fewer.
Response: Thank you for your comments. **1. The SDT set the VRFs in accordance with the FERC's and NERC's VRF guidance.** **2. The SDT has reviewed the time horizons, and feels that Requirement R1 is properly assigned a Long-Term Planning time horizon, as the activities to develop a program and to determine the monitoring attributes of components is performed within the related time period. The SDT concluded that Requirement R2 was redundant with Requirement R1, Part 1.4, and deleted Requirement R2 (together with the associated Measure and VSL).** **3. The SDT has determined that the fundamental concerns of Requirement R1, Part 1.5 and the associated changes are addressed within the PSMP definition, and that Requirement R1, Part 1.5 is not necessary; therefore, it has been removed. The associated VSL has also been revised.** **4. The 'Moderate' VSL for Requirement R1 appears to be similar to the 'Lower' VSL for Requirement R1 as you suggest.** **5. The SDT believes that, if more than two Protection System component types are not addressed, the 'Severe' VSL is appropriate.** **6. The SDT believes that your suggestion is similar to the existing text, and declines to modify the standard.**		
Nebraska Public Power District	No	VRF's: 1. The definition of a Medium Risk Requirement included on page 8 of the SAR states: "A requirement that,

Organization	Yes or No	Question 2 Comment
		if violated, could directly affect the electrical state or the capability of the bulk electric system, or the ability to effectively monitor and control the bulk electric system." The PSMP does not "directly" affect the electrical state or the capability of the bulk electric system. A failure of a Protection System component is required to "directly" affect the BES. Therefore, the PSMP has only an "indirect" affect on the electrical state or the capability of the BES. Requirements R1 through R3 and their subparts are administrative in nature in that they are comprised entirely of documentation. Therefore, I recommend changing the Violation Risk Factor of Requirements R1, R2, and R3 to Lower to be consistent with the Violation Risk Factors defined in the SAR. VSL's: 2. R2: Tables 1-1 through 1-5 refers to time-based maintenance programs. I recommend changing "condition-based" to "time-based" in all four severity levels. 3. SAR Attachment B - Reliability Standard Review Guidelines states that violation severity levels should be based on the following equivalent scores: Lower: More than 95% but less than 100% compliant Moderate: More than 85% but less than or equal to 95% compliant High: More than 70% but less than equal to 85% compliant Severe: 70% or less complaint recommend revising the percentages of the violation severity levels to be consistent with the SAR. 4. R3: The performance-based maintenance program identified in PRC-005 Attachment A provides the requirements to establish the technical justification for the initial use of a performance-based PSMP and the requirements to maintain the technical justification for the ongoing use of a performance-based PSMP. However, it appears the VSLs for Requirement R3 only addresses the ongoing use of the technical justification. a. I recommend revising the VSLs for R3 to include the initial use of the technical justification. Item 2) of R3 Severe VSL is a duplicate of Item 2) of R3 Lower VSL. This item is administrative in nature therefore I recommend deleting Item 2) from R3 Severe VSL. b. The first and third bullets of item 4) of R3 Severe VSL are administrative in nature and should be moved to the Lower VSL c. R4: SAR Attachment B - Reliability Standard Review Guidelines states that violation severity levels should be based on the following equivalent scores: Lower: More than 95% but less than 100% compliant Moderate: More than 85% but less than or equal to 95% compliant High: More than 70% but less than equal to 85% compliant Severe: 70% or less complaint recommend revising the percentages of the violation severity levels to be consistent with the SAR.

Organization	Yes or No	Question 2 Comment
Response: Thank you for your comments. **1. Requirements R1, R2, and R3 are not administrative; they are foundational. Without the fundamental development of a PSMP, an entity is unlikely to actually implement a PSMP that satisfies the reliability needs of the BES. The SDT had concluded that Requirement R2 is redundant with Requirement R1, Part 1.4, and deleted Requirement R2 (together with the associated Measure and VSL).** **2. The SDT concluded that Requirement R2 is redundant with Requirement R1, Part 1.4, and deleted Requirement R2 (together with the associated Measure and VSL).** **3. The guidelines within the SAR have been superseded by subsequent revisions to the VSL Guidelines. The VSLs in the draft standard adhere to the latest VSL Guidelines and to the June 19, 2008 FERC order on VSLs in Docket No RR08-04-000.** **4. Part a – The VSL for Requirement R3 has been modified in consideration of your comments.** **Part b – These requirements are not administrative; they are foundational. Without compliance with these requirements, an entity does not have an effective performance-based PSMP, and may be detrimentally affecting reliability.** **Part c – The latest VSL Guidelines also provide examples of VSLs similar to those in the draft standard.**		
CenterPoint Energy		
American Transmission Company	Yes	
Consumers Energy	Yes	
Southern Company Generation	Yes	
US Bureau of Reclamation	Yes	The tables rely on a reference document which is not a part of the standard and as such may be altered without due process. Either the relevant text from the reference needs to be inserted into the standard or the reference itself incorporated into the standard. Specific References such as
Response: Thank you for your comments. The Tables do not provide a reference to either the Supplementary Reference Document. An entity must comply with the standard when approved. The reference documents provide additional explanation, discussion, and rationale, but are not part of the mandatory standard. Since the reference documents are being developed to accompany the standard, the NERC Standard Development Procedure requires that they be posted with the draft standard and undergo stakeholder review, both initially and with any revision of the standard.		
Alliant Energy	Yes	

Organization	Yes or No	Question 2 Comment
LCRA Transmission Services Corporation	Yes	
MidAmerican Energy	Yes	
Ameren	No	(1)The Lower VSL for all Requirements should begin above 1% of the components. For example for R4: "Entity has failed to complete scheduled program on 1% to 5% of total Protection System components." PRC-005-2 unrealistically mandates perfection without providing technical justification. A basic premise of engineering is to allow for reasonable tolerances, even Six Sigma allows for defects. Requiring perfection may well harm reliability in that valuable resources will be distracted from other duties.
Response: Thank you for your comments. The NERC criteria for VSLs do not currently permit them to allow some level of non-performance without being in violation.		
Xcel Energy	Yes	

3. The SDT has provided the "Supplementary Reference" document to provide supporting discussion for the Requirements within the standard. Do you have any specific suggestions for improvements?

Summary Consideration: Some commenters questioned whether the Supplementary Reference Document was a part of the Standard and thus mandatory and enforceable; the SDT responded that this document is not a part of the standard but instead offers guidance/rationale to assist in the implementation of the standard. Various other comments were offered regarding the content of the Supplementary Reference Document, to which the SDT responded accordingly.

Organization	Yes or No	Question 3 Comment
Pepco Holding Inc & Affiliates	Yes	
Pacific Northwest Small Public Power Utility Comment Group	No	
Tennessee Valley Authority	No	
Northeast Power Coordinating Council	No	
Platte River Power Authority System Maintenance	No	
Electric Market Policy	Yes	The document on page 3 states that data available from EPRI (et.al) was utilized by the Standard Drafting Team; however, there are no references to EPRI documents in Section 16. Suggest including EPRI references for completeness.
Response: Thank you for your comments. Page 3 of the Supplementary Reference Document has been revised to remove reference to EPRI documents.		
Bonneville Power Administration		
Santee Cooper	No	

Organization	Yes or No	Question 3 Comment
NERC Staff	Yes	1. In section 2.3, NERC staff recommends noting that the present NERC Glossary definition of Bulk Electric System will be revised in response to FERC Order No. 743. 2. In Section 2.4, NERC staff recommends changing the phrase “relays that use measurements of voltage, current, frequency and/or phase angle” with “protective relays that respond to electrical quantities” for consistency with recent changes to the proposed definition of Protection System.
Response: Thank you for your comments. **1. The SDT believes that it is not advisable to reference future activities, but notes that the standard will be applicable to whatever is defined to be the BES, either today or in the future.** **2. The Supplementary Reference Document has been revised as suggested.**		
FirstEnergy	Yes	The discussions surrounding implementing the PSMP on pages 10 and 11 of the clean copy are troublesome for the following reasons. 1. On Pg. 10, under Sec. 8.1, the 4th bullet item states "If your PSMP (plan) requires more activities then you must perform and document to this higher standard". This statement's use of the word "must" implies that an entity will be audited to their documented maintenance practices, even if those practices exceed the requirements of the PRC-005 standard. The PRC-005 standard, and any standard, details the minimum requirements that must be met to achieve a certain reliability goal. For example, if an entity's program states that it will do maintenance on a relay every 4 years, but the standard only requires maintenance every 6 years, the entity shall be held compliant to the standard's 6 year interval. If the entity in this example decides that in year 4 it must delay its maintenance to year six, that should be allowable since the standard PRC-005-2 requires maintenance every 6 years. 2. Since the standard no longer discusses Condition Based Maintenance, it should be removed from the reference document for consistency.
Response: Thank you for your comments. **1. This text is in the Supplementary Reference Document as a caution to entities that they may be expected to be held accountable for their entire documented PSMP, even if it exceeds the minimum requirements of the standard.** **2. The Supplementary Reference Document discusses condition-based maintenance in a conceptual manner, as a generally-recognized term. The SDT did make some changes within the Supplementary Reference document to clarify the manner in which condition-based maintenance is discussed.**		

Organization	Yes or No	Question 3 Comment
Florida Municipal Power Agency	Yes	
PSEG Companies ("Public Service Enterprise Group Companies")	Yes	Figure 2 "typical generation system" shows a typical auxiliary medium voltage bus, in addition to the color coded elements suggest that a very distinct line of demarcation (dark dotted line) be added to the figure that defines the elements associated with the MV bus protection served by the station Aux Transformer and unit aux transformer are not part of the BES- PSMP PRC5 requirements. Also see comment 5 below; we suggest that the station service transformer must be connected to BES for inclusion in standard requirements. Suggest adding an explanation note to figure 2 to clarify this.
Response: Thank you for your comments. Figure 2 is intended to provide an example to users, not to describe the entire applicability of the draft standard. As such, the SDT does not believe that this figure needs to reflect all possible arrangements, nor does it need to suffice to describe the entire applicability. As for your comment regarding the unit auxiliary transformer, please see the SDT response to your more detailed comments in Question 5.		
MRO's NERC Standards Review Subcommittee	No	
Western Area Power Administration	No	
TransAlta Centralia Generation Partnership	No	
NextEra Energy	No	
City of Austin DBA Austin Energy		
PacifiCorp		
Southern Company Transmission	Yes	1. Page 11 and 12, (Additional Notes for Table 1-1 through 1-5) Comment ->> The standard does not reference these notes. Should these notes be referenced and included in the Standard? 2. Page 12, Additional Notes for Table 1, item #7 ("performing an operational trip test")

Organization	Yes or No	Question 3 Comment
		Comment ->> Standard does not state that an operational/full functional test is required. Please clarify. 3. Page 22, 15.3, Control Circuitry Functions, paragraph 1 ("verify, with a volt-meter, the existence of proper voltage at the open contacts" Comment ->> The example of measuring the proper voltage with a volt-meter at the open contacts to verify the circuit indicates that the 12-year "full functional" trip test of control circuits is not required. Please clarify. 4. Page 22, 15.3, Control Circuitry Functions, paragraph 3 ("UVLS or UFLS scheme are excluded from the tripping requirement, but not from the circuit test requirements") Comment ->> This indicates to me that measuring the proper voltage with a volt-meter at the open contacts will verify the circuit. Please confirm. Please clarify - If a suitable monitoring system is installed that verifies every parallel trip path then the manual-intervention testing of those parallel trip paths can be "extended beyond 12 years". Standard indicates that no periodic maintenance is required. Consider changing "extended beyond 12 years" to "eliminated". 5. Page 23, 15.3, Control Circuitry Functions, paragraph 5 ("When verifying the operation of the 94 and 86 relays each normally-open contact that closes to pass a trip signal must be verified as operating correctly.") Comment ->> This indicates that we must verify that trip and auxiliary device contacts change state. Please confirm. The standard does not state that the contacts must be verified to change states. If this is required, please add to the standard.

Response: Thank you for your comments.

1. **These notes are provided as application guidance relative to the Tables, which as you note, does not reference them.**
2. **This note has been revised within the Supplementary Reference Document in consideration of your comment.**
3. **This example is stated within the Supplementary Reference Document as an example method of testing the dc control circuitry. The draft standard no longer requires a "functional trip test", although it does require that lockout relays and auxiliary relays be operated at least once every 6 years to verify that they function properly.**
4. **The Supplementary Reference Document has been revised as suggested.**
5. **The draft standard specifies "Verify electrical operation" of these components every 6 years. This seems implicitly to require a change of state of the contacts. However, it may be possible to verify electrical operation without having to check the change of state of the individual contacts, but the contacts will have to be checked as part of the 12-year full test. The cited clause/paragraph Supplementary Reference Document has been revised to clarify.**

Organization	Yes or No	Question 3 Comment
Clark Public Utilities	No	
Exelon		
Manitoba Hydro	No	
Dynegy Inc.	No	
Oncor Electric Delivery Company LLC	No	
Ingleside Cogeneration LP	Yes	Ingleside Cogeneration, LP, believes that the Section 15.5 of the Supplementary Reference "Associated communications equipment (Table 1-2)" properly reflects the intent of the validation of relay-to-relay communications. It states that any "evidence of operational test or documentation of measurement of signal level, reflected power or data-error rates can fulfill the requirements." However, Table 1-2 - which will be the ultimate reference used by audit teams - only clearly allows for the measurement of channel parameters. Although the newer technology relays provide read-outs of signal level or data-error rates that do not require intrusive testing, older relays do not. The tools required to perform such testing are not easily available - and may leave the communications channel in worse shape after testing than it was prior to testing. We believe that Table 1-2 should be updated to clearly state that an operational test is sufficient for the testing of relay-to-relay communication - consistent with the Supplementary Reference.
Response: Thank you for your comments. The standard does not explicitly require measurement of channel parameters, but instead specifies that they may be verified. The Supplementary Reference Document has been revised to remove the discussion of operational testing of the communications channel.		
Indiana Municipal Power Agency	No	
South Carolina Electric and Gas	No	
Entergy Services	Yes	R1.5 calls for "identification of calibration tolerances or equivalent parameters for each Protection System Component Type....". We believe the Supplementary Reference document should provide additional information and examples of calibration tolerances or equivalent parameters which would be expected for the various component types. Especially for any "equivalent" parameters which would be required for compliance

Organization	Yes or No	Question 3 Comment
		for a component type besides protective relays.
Response: Thank you for your comments. The SDT determined that the fundamental concerns of Requirement R1, Part 1.5 and the associated changes are addressed within the PSMP definition, and that Requirement R1, Part 1.5 is not necessary; therefore, it has been removed.		
Duke Energy	No	
Wisconsin Electric Power Company	No	
Independent Electricity System Operator	No	
American Electric Power	Yes	With such a complex standard as this, the FAQ and Supplementary Reference documents do aid the Protection System owner in demystifying the requirements. But AEP holds strong doubt on how much weight the documents carry during audits. It would be better to include them as an appendix in the actual standard, but in a more compact version with the following modifications: 1. Section 5 of the Supplementary Reference, refers to "condition-based" maintenance programs. However, no where in the standard is the term "condition-based" used in reference to defining ones PSMP. The Supplementary Reference should be revised to remove reference to a condition-based PSMP; alternatively the Standard could be revised to include the term "condition-based" within the Standard Requirements and Table 1. 2. Section 15.7, page 26, appears to have a typographical error "...can all be used as the primary action is the maintenance activity..." 3. Figure 2 is difficult to read. The figure is grainy and the colors representing the groups are similar enough that it is hard to distinguish between groups.
Response: Thank you for your comments. The discussion within the Supplementary Reference Document and FAQ are informative, not normative, and thus do not belong as part of the standard. **1. The Supplementary Reference Document discusses condition-based maintenance in a conceptual manner, as a generally-recognized term. The SDT did make some changes within the Supplementary Reference Document to clarify the manner in which condition-based maintenance is discussed.** **2. This clause has been corrected.**		

Organization	Yes or No	Question 3 Comment
3. A higher-quality version of Figure 2 has been substituted.		
ITC	Yes	1. Auxiliary Relay Testing: We repeat our objection to the 6 year requirement for testing of auxiliary relays. The STD response to our previous objection was: Please see new Table 1-5. The SDT believes that mechanical solenoid-operated devices share performance attributes (and failure modes) with electromechanical relays and need to be tested at similar intervals. Performance-based maintenance is an option to increase the intervals if the performance of these devices supports those intervals. Auxiliary relays are, of course, electromechanical relays, but much less complicated than impedance, differential or even time-overcurrent electromechanical relays. It has been our experience that trip failures are rare and that our present 10 year control, trip tests, and other related testing are sufficient in verifying the integrity of the scheme. Section 8.3 of the Supplementary Reference notes statistical surveys were done to determine the maintenance intervals. Were auxiliary relays included in these surveys in a such a way to verify that they indeed require a 6 year maintenance interval? We recommend they be considered part of the control circuitry, with a 12 year test cycle. 2. High Speed Ground Switch Testing: We repeat our recommendation that the standard state that a high speed ground switch is an interrupting device. We also recommend that testing requirements for High-Speed ground switches be clearly stated in the standard. Section 15.3 of the Supplementary Reference contains the following: It is necessary, however, to classify a device that actuates a high-speed auto-closing ground switch as an interrupting device if this ground switch is utilized in a Protection System and forces a ground fault to occur that then results in an expected Protection System operation to clear the forced ground fault. The SDT believes that this is essentially a transferred-tripping device without the use of communications equipment. If this high-speed ground switch is "...applied on, or designed to provide protection for the BES..." then this device needs to be treated as any other Protection System component. The control circuitry would have to be tested within 12 years and any electromechanically operated device will have to be tested every 6 years. If the spring-operated ground switch can be disconnected from the solenoid triggering unit then the solenoid triggering unit can easily be tested without the actual closing of the ground blade. We disagree that a high-speed ground switch can be adequately tested by disconnecting the solenoid triggering unit. The ability of the trip coil to "operate the circuit breaker" must be verified per Table 1-5 Row 1. The ability of the "solenoid triggering unit" to operate the ground switch should be required also. A high-speed ground switch is a unique device. Its maintenance requirements should be specifically included in the standard itself. Based on Draft 3 of the standard, this is a electromechanically operated device and would have to be tested every 6 years. A logical location would be in Table 1-5. Is there test

Organization	Yes or No	Question 3 Comment
		data to support the test method of disconnecting the solenoid triggering unit?
Response: Thank you for your comments. **1. The SDT believes that the appropriate interval for electromechanical devices such as aux or lockout relays should remain at 6 years, as these devices contain "moving parts" which must be periodically exercised to remain reliable.** **2. PRC-005-2 includes high-speed grounding switch trip coils within the dc control circuitry to the degree that the initiating Protection Systems are characterized as "transmission Protection Systems". There is currently an unapproved interpretation response (project 2009-17) addressing what is a "transmission protection system." When this interpretation is approved, the SDT will incorporate it within PRC-005-2. Section 15.3 of the Supplementary Reference Document will be revised to clarify the discussion of testing of the ground-switch trip coil.**		
ISO New England Inc.	No	
Nebraska Public Power District	Yes	The Supplementary Reference Documents identified are unapproved and in draft form. I believe that only approved documents should be referenced in the Standard. Therefore, I recommend updating the Supplementary Reference Documents section with approved versions of the documents.
Response: Thank you for your comments. The SDT revised the Supplementary Reference Document section of the draft Standard.		
CenterPoint Energy		
American Transmission Company	No	
Consumers Energy	No	
Southern Company Generation	Yes	1. On Page 4, Paragraph 2.2 is no longer proposed - the paragraphs just before 2.2 need to be revised. 2. On Page 12, item 7, the phrase "operational trip test" is not used in the standard. Please consider using this phrase in the standard. 3. On Pages 14-15, several paragraphs describing the contents of Sections 9, 10, 11, & 13 are given – these appear to be out of place and don't seem to belong here (just before "9. Performance-Based Maintenance Process). 4. On Page 24, correct the bulleted Protection System Definition to match the most recent definition.

Organization	Yes or No	Question 3 Comment
		5. On Page 29, please improve the clarity of Figure 2. 6. On Page 31, please revise the flowchart references to R4.4.1 and R4.4.2. 7. Please correct the following formatting: Page 2, Table of Contents; Page 18, the bulleted item list; Page 23, add a space before the last paragraph.
Response: Thank you for your comments. **1. This Section of the Supplementary Reference Document has been corrected.** **2. This Section of the Supplementary Reference Document has been revised.** **3. The Supplementary Reference Document has been revised to address your comment.** **4. The Supplementary Reference Document has been revised to address your comment.** **5. The Supplementary Reference Document has been revised to address your comment.** **6. The Supplementary Reference Document has been revised to address your comment.** **7. The Supplementary Reference Document has been revised to address your comment.**		
US Bureau of Reclamation	Yes	The Supplementary reference provides significant clarity to the intent and application of standard; however, in doing so, it reveals conflicts and ambiguity in the text of the standard. It is suggested that some of the clarifying language be inserted into the text of the standard.
Response: Thank you for your comments. To the extent possible, the clarifying language of the Supplementary Reference Document will be incorporated into the next version of PRC-005 when the standard is drafted in the Results-based format.		
Alliant Energy	No	
LCRA Transmission Services Corporation	Yes	Well written and helpful document. In Section 8.1, the document states that if your PSMP requires activities more often than the Tables maximum, then you must perform to that higher standard. While it is understandable that an entity may desire to maintain their PRS at a higher level, they should not be fined or penalized for achieving less than their standard but within the intervals stated in the Tables. This point should be clarified, preferably within the standard itself.
Response: Thank you for your comments. Requirement R1, Part 1.3 and Requirement R4 within the Standard has been revised in a manner which addresses your comment. However, the SDT re-emphasizes that entities may be expected to be held to their PSMP developed in accordance to		

Organization	Yes or No	Question 3 Comment
Requirement R1, whether it minimally addresses the remainder of the requirements in the standard or exceeds those requirements.		
MidAmerican Energy	Yes	The Supplementary Reference should have clear disclaimers indicating that nothing in the reference is mandatory and enforceable.
Response: Thank you for your comments. NERC establishes that only the Standard is mandatory and enforceable, and Section F of the standard introduces the Supplementary Reference Document as presenting supporting discussion. The introductory area of the Supplementary Reference Document will be revised to clarify this.		
Ameren	No	
Xcel Energy	Yes	1. Requirement R1 of the standard has been changed and no longer states that only relays which sense current, voltage, and phase angle to detect anomalies are in scope. However, it is noted that the new definition of Protection System states "Protective Relays which respond to electrical parameters." Does Section 2.4 of the Supplementary Reference and, in particular, the last sentence of this section, still align with the standard such that sudden pressure devices are not classified as a relay requiring calibration per Table 1-1? Is the tripping path through the Sudden Pressure Device included as DC Control Circuitry per Table 1-5? FAQ II.4.F would indicate testing of trips from 63 devices are also not required. If so, perhaps this should be restated in Section 2.4 of the Supplementary reference. 2. Section 2.4 could be read to imply that "applicable relays" includes IEEE device #86, lockout relays and IEEE device #94, tripping or trip free relays. However, it is apparent from Table 1-1 "Component Type – Protective Relays" that there are no maintenance activities applicable to 86 or 94 devices. On the other hand, Table 1-5 "Component Type - Control Circuitry" does include maintenance activities for electromechanical trip or auxiliary devices. Thus the tables of the standard imply that 86 and 94 devices would be more accurately classified as DC control circuitry rather than relays. We suggest that Section 2.4 be written to clarify the SDT's intent for the component type classification of devices 86 and 94. Note that auditors of PRC-005-1 frequently ask for a list of in scope relays and it would nice to have a definite rationale for excluding 86 and 94 devices from these relay lists.
Response: Thank you for your comments. **1. The Supplementary Reference Document has been revised to clarify this point.** **2. The SDT re-emphasizes that auxiliary and lockout relays are included within the standard as mechanical-operating devices that must be verified to operate within a 6-year interval, and also as devices which must be verified within the verification of all paths of the trip circuits on a 12-year interval. It is left to the entity to determine how to best demonstrate compliance with that requirement to the compliance monitor. The**		

Organization	Yes or No	Question 3 Comment
Supplementary Reference Document has been revised to clarify this point.		

4. The SDT has provided the "Frequently-Asked Questions" (FAQ) document to address anticipated questions relative to the standard. Do you have any specific suggestions for improvements?

Summary Consideration: Commenters suggested corrective language and requested additional discussions within the FAQ document. The SDT decided to eliminate the FAQ document and incorporate its contents into the Supplementary Reference Document as appropriate. The SDT considered all commenters' suggestions during that activity.

Organization	Yes or No	Question 4 Comment
Pepco Holding Inc & Affiliates	Yes	
Pacific Northwest Small Public Power Utility Comment Group	Yes	WECC does not use the definition of the BES that NERC supplied to FERC via http://www.nerc.com/docs/docs/ferc/RM06-16-6-14-07CompFilingPar77ofOrder693FINAL.pdf,so the answer to III.1.3 (page 19-20) is not accurate.
Response: Thank you for your comments. The SDT decided to eliminate the FAQ document and incorporate the FAQ's contents into the Supplementary Reference Document as appropriate. The SDT considered your comments during this activity.		
Tennessee Valley Authority	No	
Northeast Power Coordinating Council	Yes	See response to Question 5 below.
Response: Thank you for your comments. Please see our response to your comments in Question 5.		
Platte River Power Authority System Maintenance	No	
Electric Market Policy	Yes	The FAQ's do not appear to have kept up with the current draft Standard. 1. For example, Question B under Section 2 for Protective Relays, refers to the use of the word "Restoration" in the definition of a Protection System Maintenance Program. The current definition uses the word "Restore." 2. Additionally, Answers B, I, and J under Section 2 for Protective Relays each refer to Requirement R4.3,

Organization	Yes or No	Question 4 Comment
		which in not in the current Standard. Suggest a final edit of the FAQ's to clean-up these type of issues.
Response: Thank you for your comments. The SDT decided to eliminate the FAQ document and incorporate the FAQ's contents into the Supplementary Reference Document as appropriate. The SDT considered your comments during this activity.		
Bonneville Power Administration		
Santee Cooper	No	
NERC Staff	Yes	1. At a minimum, the response to Question II.1.A should be revised to reflect the present revision of Requirement R1. In the current proposed response to the FAQ, the answer refers to text that was deleted from Requirement R1 in the current posting of the standard; i.e., this standard covers protective relays "that use measurements of voltage, current and/or phase angle to determine anomalies and to trip a portion of the BES." The removal of this text from Requirement R1 makes it less clear whether the standard applies to reclosing functions and protective functions used to supervise automatic or manual closing of a circuit breaker to ensure the voltage magnitude and phase angle difference are within specified tolerances. The drafting team also should consider whether additional specificity is required to ensure applicability is clearly defined within the standard. 2. In the response to Question II.2.H, NERC staff notes that the word "than" should be changed to "then" in the phrase "If the component no longer performs Protection System functions than..." 3. In the response to Question II.2.I, NERC staff recommends noting that "When a failure occurs in a protection system, power system security may be compromised, and notification of the failure must be conducted in accordance with relevant NERC standard(s)." The recommended text is included in the Supplementary Reference Document and inclusion in the FAQ response provides consistency and highlights obligations in other standards necessary for BES reliability. 4. In the response to Question III.1.A, NERC staff recommends noting that the present NERC Glossary definition of Bulk Electric System will be revised in response to FERC Order No. 743. 5. In the response to Question III.3.A, NERC staff recommends a more generic reference to NERC UFLS requirements in place of the reference to PRC-007-0, as PRC-007 will be retired pending FERC approval of PRC-006-1.In the response to Question IV.1.A (third paragraph), NERC staff recommends changing the phrase "that are certainly coming to the industry" to "may be coming to the industry" for consistency with the change to the response to Question V.4.A. Both questions appear to address the same or similar concerns.

Organization	Yes or No	Question 4 Comment
Response: Thank you for your comments. The SDT decided to eliminate the FAQ document and incorporate the FAQ's contents into the Supplementary Reference Document as appropriate. The SDT considered your comments during this activity.		
FirstEnergy	No	
Florida Municipal Power Agency	Yes	
PSEG Companies ("Public Service Enterprise Group Companies")	Yes	Suggest that the section 5 - station DC supply have some specific examples added that would be acceptable methods for verifying the "state of charge" as required by standard table 1-4.
Response: Thank you for your comments. The SDT decided to eliminate the FAQ document and incorporate the FAQ's contents into the Supplementary Reference Document as appropriate. The SDT considered your comments during this activity. Table 1-4 has been revised to remove "state of charge" from the activities.		
MRO's NERC Standards Review Subcommittee	No	
Western Area Power Administration	No	
TransAlta Centralia Generation Partnership	No	
NextEra Energy	No	
City of Austin DBA Austin Energy		
PacifiCorp		
Southern Company Transmission	Yes	1. Page 7, L. ("verify operation of the relay inputs ...") Comment ->> Clarification needed. Standard states that each input should be "picked up" or "turned on and off". Do you have to change states of the input contact(s) or can you just jumper positive to the input(s) to verify that the microprocessor relay verifies this change of state?

Organization	Yes or No	Question 4 Comment
		2. Page 10, 4.E ("What does functional (or operational) trip test include?") Comment ->> The words "functional (or operational) trip test" are not in the Standard. Is this required? If so, please clarify this in Standard. If not, please remove. (Reference comment regarding "verify all paths of the control and trip circuits" on page 17 of standard.) 3. Page 18, 7. (Distributed UVLS and UFLS system.) and Page 19 8. (Centralized UVLS and UFLS system.) Comment ->> Standard does not specify "distributed" or "centralized" UVLS and UFLS systems. Please consider combining section 7 & 8, omitting items 7.C., 8.E., and omitting "distributed" and "centralized" references on pages 18 and 19.
Response: Thank you for your comments. **The standard does explicitly require that auxiliary relays, lockout, and trip coils of interrupting devices be verified to have electrically operated every 6 years, and this is the only place in the standard that currently requires this sort of activity.** **The SDT decided to eliminate the FAQ document and incorporate the FAQ's contents into the Supplementary Reference Document as appropriate. The SDT considered your comments during this activity.**		
Clark Public Utilities	Yes	Provide answers to the following questions. Does the completion of a battery ohm test or a battery performance test satisfy the verification requirements for state of charge of the individual battery cells/units, battery continuity, battery terminal connection resistance, and battery internal cell-to-cell or unit-to-unit connection resistance (where available to measure)?
Response: Thank you for your comments. The activities described do not satisfy all of the requirements (at the established intervals) listed in your comment. The SDT decided to eliminate the FAQ document and incorporate the FAQ's contents into the Supplementary Reference Document as appropriate. The SDT considered your comments during this activity. Table 1-4 has been revised to remove "state of charge" from the activities.		
Exelon	Yes	1. Clarify what kind of testing is required on lockout relays/86 devices. Specifically, whether functional testing is adequate or if simple calibration, similar to protective relays, is all that is are required. 2. Clarify if protective relays that trip equipment (e.g., a condensate pump that would in turn cause a main generator trip) are also included in the scope of this Standard. 3. Clarify if relays which result in generator run back, but do not trip the generator, are included in the scope of this Standard.
Response: Thank you for your comments.		

Organization	Yes or No	Question 4 Comment
1. For lockout relays, the standard requires that they be electrically operated every 6 years, and that the trip path be verified every 12 year. No calibration/etc is specified. **2. As described in FAQ III.2.A, protective relays which trip equipment within the plant which may eventually result in tripping of the generator, but do not trip the generator (either directly or via a generator lockout relay) , are not included.** **3. If the generator run back scheme is characterized as a Special Protection System within your region, these relays would be included as part of that system (Section 4.2.6- Applicability of the draft Standard).** **The SDT decided to eliminate the FAQ document and incorporate the FAQ's contents into the Supplementary Reference Document as appropriate. The SDT considered your comments during this activity.**		
Manitoba Hydro	Yes	As previously stated, the maintenance requirements for batteries listed in Table 1-4 do not appear to be consistent with example 1 in Section V, 1A of the FAQ. Specifically the FAQ does not mention the of the individual battery cells/units, the battery continuity, the battery terminal connection resistance, the battery internal cell-to-cell or unit-to-unit connection resistance, or the cell condition which are indicated as 18 month interval tasks in table 1-4.
Response: Thank you for your comments. The SDT decided to eliminate the FAQ document and incorporate the FAQ's contents into the Supplementary Reference Document as appropriate. The SDT considered your comments during this activity. Table 1-4 has been revised to remove "state of charge" from the activities.		
Dynegy Inc.	No	
Oncor Electric Delivery Company LLC	Yes	There is still confusion in Table 1-4 concerning the "Monitored Station dc supply." The uncertainty is over whither an Owner must have all seven (7) monitoring activities (Station dc supply voltage, State of charge of the individual battery cell/units, Battery continuity of station battery, Cell-to-cell and battery terminal resistance, Electrolyte level of all cells in station battery, Unintentional dc grounds, and Cell/unit internal ohmic values of station battery) listed in the table or just one of them to take advantage of forgoing the maximum maintenance interval for an activity and going to the 6 year maximum maintenance interval to verify that the monitoring device is calibrated. A FAQ concerning this question would be beneficial to those who are concerned that they must monitor all seven activities in order to take advantage of condition based maintenance for the station dc supply. Also an explanation of how each of the 7 monitoring activities relates to a specific station dc supply maintenance activity might be beneficial.
Response: Thank you for your comments. Table 1-4 has been further revised to address your concern (see Table 1-4(f)). The SDT decided to eliminate the FAQ document and incorporate the FAQ's contents into the Supplementary Reference Document as appropriate. The SDT considered your comments during this activity. Table 1-4 has been revised to remove "state of charge" from the activities.		

Organization	Yes or No	Question 4 Comment
Ingleside Cogeneration LP		
Indiana Municipal Power Agency	No	
South Carolina Electric and Gas	No	
Entergy Services	Yes	Section II.2.B references R4.3 which has been revised to R4.2.
Response: Thank you for your comments. The SDT decided to eliminate the FAQ document and incorporate the FAQ's contents into the Supplementary Reference Document as appropriate. The SDT considered your comments during this activity.		
Duke Energy	Yes	There are typographical errors on the FAQ Requirements Flowchart (should be R4.1.1 and R4.1.2 instead of R4.4.1 and R4.4.2).
Response: Thank you for your comments. The SDT decided to eliminate the FAQ document and incorporate the FAQ's contents into the Supplementary Reference Document as appropriate. The SDT considered your comments during this activity.		
Wisconsin Electric Power Company	Yes	Table 1-4 requires an activity to verify the state of charge of battery cells. There are no possible options for meeting this requirement listed in the FAQ document. Unlike other terms used in the standard, this term is not mentioned or defined in the FAQ. To comply with this standard, the SDT needs to provide more guidance. For example, for VLA batteries the measured specific gravity could indicate state of charge. For VRLA batteries, it is not as clear how to determine state of charge, but possibly this can be determined by monitoring the float current.
Response: Thank you for your comments. The SDT decided to eliminate the FAQ document and incorporate the FAQ's contents into the Supplementary Reference Document as appropriate. The SDT considered your comments during this activity. Table 1-4 has been revised to remove "state of charge" from the activities.		
Independent Electricity System Operator	No	
American Electric Power	Yes	With such a complex standard as this, the FAQ and Supplementary Reference documents do aid the Protection System owner in demystifying the requirements. But AEP holds strong doubt on how much weight the documents carry during audits. It would be better to include them as an appendix in the actual standard, but in a more compact version with the following modifications:

Organization	Yes or No	Question 4 Comment
		1. The section "Terms Used in PRC-005-2" is blank and should be removed as it adds no value. 2. Section I.1 and Section IV.3.G reference "condition-based" maintenance programs. However, no where in the standard is the term "condition-based" used in reference to defining ones PSMP. The FAQ should be revised to remove reference to a condition-based PSMP; alternatively the Standard could be revised to include the term "condition-based" within the Standard Requirements and Table 1. 3. The second sentence to the response in Section I.1 appears to have a typographical error "... an entity needs to and perform ONLY time-based...".
Response: Thank you for your comments. The discussion within the Supplementary Reference and FAQ are informative, not normative, and thus do not belong as part of the standard. The SDT decided to eliminate the FAQ document and incorporate the FAQ's contents into the Supplementary Reference Document as appropriate. The SDT considered your comments during this activity.		
ITC	No	
ISO New England Inc.	Yes	See response to Question 5 below.
Response: Thank you for your comments. Please see our response to your comments in Question 5.		
Nebraska Public Power District	No	
CenterPoint Energy	Yes	The need for an FAQ document, in addition to an extensive Supplementary Reference document, illustrates the complexity and impracticality of the proposed Standard. CenterPoint Energy does not support the development of an additional type of document, that is, the FAQ document. CenterPoint Energy recommends eliminating the FAQ document and using only a Supplementary Reference" document. This would also provide the benefit of not having contradictory information in the two documents.
Response: Thank you for your comments. The SDT believes that entities should be able to implement the standard without either the FAQ or Supplementary Reference. However, the SDT is also convinced that many entities may find the supporting discussion/rationale useful, particularly to assist them in implementing the standard in an efficient manner. The SDT decided to eliminate the FAQ document and incorporate the FAQ's contents into the Supplementary Reference Document as appropriate.		
American Transmission Company	Yes	1. FAQ Protective Relays 2.D: The last sentence is not consistent with the discussions at the "March 2010, Standard Drafting Team Meeting, Project 2007-17". The understanding from that meeting was that the relay settings would be verified that the "as left" settings were the same as the "as found" settings and that the intent was not to verify the settings against a Master Record. Therefore the intent is that the tester will

Organization	Yes or No	Question 4 Comment
		verify that no setting changes were made as part of the testing process. Please include this clarification with the language in the standard. 2. FAQ Group by Type of Maintenance Program 2.B: We agree with the use of either the in-service date or the commissioning date to start the initial due date calculation for maintenance. Please include this clarification with the language in the standard.
Response: **1. The intent is that the settings of the component be as specified at the conclusion of maintenance activities, whether those settings may have "drifted" since the prior maintenance or whether changes were made as part of the testing process.** **2. The discussion within the Supplementary Reference and FAQ are informative, not normative, and thus do not belong as part of the standard. The SDT decided to eliminate the FAQ document and incorporate the FAQ's contents into the Supplementary Reference Document as appropriate. The SDT considered your comments during this activity.**		
Consumers Energy	No	
Southern Company Generation	Yes	1. On Page 3, please revise the flow chart references to R4.4.1 and R4.4.2. Also, add (Attachment A) to the "Performance Based" label. 2. On Page 7, Section I, correct the reference of R4.3 to R4.2. 3. Also, revise the last paragraph in Section I to the following: The entity should assure that the component performance is acceptable at the conclusion of the maintenance activities or initiate resolution of any indentified maintenance correctable issues. 4. On Page 7, Section J, correct the reference of R4.3 to R4.2. 5. On Page 10, Section D, a reference is made to "trip test" Table 1. Should this be Table 1-5? The exact phrase "trip test" is not used in the standard. Should it be? 6. On Page 10, Section e, the phrase "functional (or operational) trip test" is not used in the standard – should it be? 7. On Page 11, Section 5A, correct the reference of Table 1 to Table 1-4 in the Station Battery and Emerging Technologies paragraph. 8. On Page 12, Section B, correct the reference of Table 1 to Table 1-4. (2X)

Organization	Yes or No	Question 4 Comment
		9. On Page 13, Section F, correct the reference of Table 1 to Table 1-4. (1X) 10. On Page 14, Section G, correct the reference of Table 1 to Table 1-4. (3X) 11. On Page 14, Section G, change the text "The first maintenance activity" to The capacity testing activity". 12. On Page 14, Section G, change the text "The second maintenance activity", to The internal ohmic measurement activity". 13. On Page 14, Section H, correct the reference of Table 1 to Table 1-4. (1X) 14. On Page 17, Section C, correct the reference of Table 1 to Table 1-5. (1X) 15. Please address what is meant by "Battery terminal connection resistance" on Page 14, Table 1-4 of the standard.
Response: Thank you for your comments. The discussion within the Supplementary Reference and FAQ are informative, not normative, and thus do not belong as part of the standard. The SDT decided to eliminate the FAQ document and incorporate the FAQ's contents into the Supplementary Reference Document as appropriate. The SDT considered your comments during this activity.		
US Bureau of Reclamation		No Comment
Alliant Energy	No	
LCRA Transmission Services Corporation	Yes	
MidAmerican Energy	Yes	The Frequently Asked Questions should have clear disclaimers indicating that nothing in the reference is mandatory and enforceable.
Response: Thank you for your comments. NERC establishes that only the Standard is mandatory and enforceable, and Section F of the standard introduces this (and the Supplementary Reference Document) as presenting supporting discussion. The SDT decided to eliminate the FAQ document and incorporate the FAQ's contents into the Supplementary Reference Document as appropriate. The introductory area of the Supplementary Reference Document will be revised to address your concern.		
Ameren	No	This document is helpful.
Xcel Energy	Yes	The changes in the standard and edit attempts on the FAQ have created some problems and confusion. Examples; The new FAQ I.1 answer does not make sense "An entity needs to and perform ONLY time-based

Organization	Yes or No	Question 4 Comment
		. . ." FAQ II.1.A: Requirement R1 no longer contains the statement that "use voltage, current, or phase angle to detect anomalies" so the answer to this FAQ is now out of synch with the standard. FAQ II.2.B – "Restoration" is no longer in the PMSP and has been changed to "Restore" and R4.3 no longer exists. FAQ II.2.I and II.2.J answers also references non-existent requirement R4.3. These are just some examples of fidelity issues that have been created by the most recent edit of PRC-005-2 – we did not perform a review of the entire document. The SDT should be commended for its efforts on the FAQ document as it is exceedingly helpful and well written. However, it needs to be brought back into alignment with the Standard. It is apparent that this fidelity check between the standard and the FAQ was not done prior to this posting. Finally, it seems some FAQs would be warranted to help explain the intent of new requirements R1.5 and R4.2 especially in regards to non-quantifiable maintenance results such as battery visual inspection as well as to provide examples of "other equivalent parameters" acceptance criteria for the various component types included in the Protection System definition
Response: Thank you for your comments. The SDT decided to eliminate the FAQ document and incorporate the FAQ's contents into the Supplementary Reference Document as appropriate. The SDT considered your comments during this activity.		

5. If you have any other comments on this Standard that you have not already provided in response to the prior questions, please provide them here.

Summary Consideration: Many commenters disagreed with Requirement R1, Part 1.5 which was added in the previous draft; in response, the SDT removed Requirement R1, Part 1.5 from the standard. Commenters also observed that Requirement R1, Part 1.4 was redundant with Requirement R2, and the SDT removed R2 in response to these comments. Many commenters objected to 4.2.5.5 in the Applicability Section; the SDT removed this clause.

Organization	Yes or No	Question 5 Comment
Pepco Holding Inc & Affiliates	Yes	1. What "specific statistical data" was used to validate that unmonitored communication systems are 24 times more prone to failure than unmonitored protective relays? Comments were previously submitted that the 3 month interval for verifying unmonitored communication systems was much too short. The SDT declined to change the interval and in their response stated: "The 3 month intervals are for unmonitored equipment and are based on experience of the relaying industry represented by the SDT, the SPCTF and review of IEEE PSRC work. Relay communications using power line carrier or leased audio tone circuits are prone to channel failures and are proven to be less reliable than protective relays." The 3 month interval is very burdensome and our experience does not appear to justify. A longer interval should be reconsidered.
Response: Thank you for your comments. The SDT reasserts that the 3 month intervals are for unmonitored equipment and are based on experience of the relaying industry represented by the SDT, the SPCTF and review of IEEE PSRC work. Relay communications using power line carrier or leased audio tone circuits are prone to channel failures and are proven to be less reliable than protective relays. If an entity's experience is that these components require less-frequent maintenance, a performance-based program in accordance with R3 and Attachment A is an option.		
Pacific Northwest Small Public Power Utility Comment Group	No	
Tennessee Valley Authority	Yes	1R4 - "Identification of the resolution" and "Initiation of the resolution" are very distinct activities. In other places in this standard the requirement is for the resolution to be initiated, that is identified in a corrective maintenance work order, "identification of a resolution" requires technical expertise and can be difficult to track and might change over time for a particular problem. Proposed Change: Change "identification" to "initiation" in phrase "including identification of the resolution...". Overall: NERC is making significant changes to this sizeable standard and only allowing minimum comment period. While this is a good standard that has clearly taken many hours to develop, we are primarily voting

Organization	Yes or No	Question 5 Comment
		"NO" because of the hurried fashion it is being commented, voted, and reviewed.
Response: Thank you for your comments. Requirement R4 has been revised.		
Northeast Power Coordinating Council	Yes	1. In general, the standard is overly prescriptive and complex. It should not be necessary for a standard at this level to be as detailed and complex as this standard is. Entities working with manufacturers, and knowledge gained from experience can develop adequate maintenance and testing programs. 2. Why are "Relays that respond to non-electrical inputs or impulses (such as, but not limited to, vibration, pressure, seismic, thermal or gas accumulation)..." not included? The output contacts from these devices are oftentimes connected in tripping or control circuits to isolate problem equipment. 3. Due to the critical nature of the trip coil, it must be maintained more frequently if it is not monitored. Trip coils are also considered in the standard as being part of the control circuitry. Table 1-5 has a row labeled "Unmonitored Control circuitry associated with protective functions", which would include trip coils, has a "Maximum Maintenance Interval" of "12 Calendar Years". Any control circuit could fail at any time, but an unmonitored control circuit could fail, and remain undetected for years with the times specified in the Table (it might only be 6 years if I understand that as being the trip test interval specified in the table). Regardless, if a breaker is unable to trip because of control circuit failure, then the system must be operated in real time assuming that that breaker will not trip for a fault or an event, and backup facilities would be called upon to operate. Thus, for a line fault with a "stuck" breaker (a breaker unable to trip), instead of one line tripping, you might have many more lines deloaded or tripped because of a bus having to be cleared because of a breaker failure initiation. The bulk electric system would have to be operated to handle this contingency. 4. In reference to the FAQ document, Section 5 on Station dc Supply, Question K, clarification is needed with respect to dc supplies for communication within the substation. For example, if the communication systems were run off a separate battery in separate area in a substation, would the standard apply to these batteries or not? 5. To define terms only as they are used in PRC-005-2 is inviting confusion. Although they may be unique to PRC-005-2, some or all of them may be used in future standards, some already may be used in existing standards, and may or may not be deliberately defined. Consistency must be maintained, not only for administrative purposes, but for effective technical communications as well. 6. What is the definition of "Maintenance" as used in the table column "Maximum Maintenance Interval"? Maintenance can range from cleaning a relay cover to a full calibration of a relay. 7. A control circuit is not a component, it is made up of components.

Organization	Yes or No	Question 5 Comment
		8. Sub-requirement 1.5 needs to be clarified. It is not clear what "Identify calibration tolerances or other equivalent parameters..." means, and may be subject to different interpretations by entities and compliance enforcement personnel. 9. In the Implementation plan for Requirement R1, recommend changing "six" to fifteen. This change would restore the 3-month time difference that existed in the previous draft, between the durations of the implementation periods for jurisdictions that do and do not require regulatory approval. It will ensure equity for those entities located in jurisdictions that do not require regulatory approval, as is the case in Ontario. 10. The 'box' for "Monitored Station dc supply..." in Table 1-4 is not clear. It seems to continue to the next page to a new box. There are multiple activities without clear delineation. 11. Regarding station service transformers, Item 4.2.5.5 under Applicability should be deleted. The purpose of this standard is to protect the BES by clearing generator, generator bus faults (or other electrical anomalies associated with the generator) from the BES. Having this standard apply to generator station service transformers, that have no direct connection to the BES, does meet this criteria. The FAQs (III.2.A) discuss how the loss of a station service transformer could cause the loss of a generating unit, but this is not the purpose of PRC-005. Using this logic than any system or device in the power plant that could cause a loss of generation should also be included. This is beyond the scope of the NERC standards. 12. The Drafting Team must respond to the following concerns raised in the FERC NOPR, Docket No. RM10-5-000, Interpretation of Protection System Reliability Standard, December 16, 2010) to "prevent a gap in reliability". a. Any component that detects any quantity needed to take an action, or that initiates any control action (initial tripping, reclosing, lockout, etc.) affecting the reliability of the Bulk-Power System should be included as a component of a Protection System, as well as any component or device that is designed to detect defective lines or apparatuses or other power system conditions of an abnormal or dangerous nature and to initiate appropriate control circuit actions. b. The exclusion of auxiliary relays will result in a gap in the maintenance and testing of Protection Systems affecting the reliability of the Bulk-Power System. c. Excluding the maintenance and testing of reclosing relays will result in a gap in the maintenance and testing of relays affecting the reliability of the Bulk-Power System. d. Not establishing the specific requirements relative to the scope and/or methods for a maintenance and testing program for the DC control circuitry that is necessary to ensure proper

Organization	Yes or No	Question 5 Comment
		operation of the Protection System, including voltage and continuity.

Response: Thank you for your comments.

1. **The intervals and activities specified are believed by the SDT to be technically effective, in a fashion that may be consistently monitored for compliance. Further, FERC Order 693 directs NERC to establish maximum allowable intervals, which implies that minimum activities also need be prescribed. If an entity's experience is that components require less-frequent maintenance, a performance-based program in accordance with Requirement R3 and Attachment A is an option.**
2. **The SDT concentrated their efforts on protective relays which use the entire group of component types within the Protection System definition. Also, there is currently no technical basis for the maintenance of the devices which respond to non-electrical quantities on which to base mandatory standards related either to activities or intervals. Absent such a technical basis, we are currently unable to establish mandatory requirements, but may do so in the future if such a technical basis becomes available.**
3. **According to Table 1-5, trip coils of interrupting devices must be verified to operate every 6 years, rather than the 12-year interval. As a regional entity, you can specify Supplementary regional requirements to maintain these devices more frequently if you desire.**
4. **With respect to dc supply associated only with communications systems, we prescribe, within Table 1-2, that the communications system must be verified as functional every 3 months, unless the functionality is verified by monitoring. The specific station dc supply requirements (Table 1-4) do not apply to the dc supply associated only with communications systems. The SDT has decided to eliminate the FAQ and incorporate topics and discussion from the FAQ within the Supplementary Reference Document. Your comments will be considered within that activity.**
5. **The SDT has proposed these terms for use only within PRC-005-2 because we are concerned that other uses of these terms, either now or in the future, may not be consistent with the terms as used here. They are defined only for clarify within this standard. The SDT will confirm with NERC staff that this approach is acceptable.**
6. **As used in the "Maximum Maintenance Interval" column title of the table, maintenance refers to whatever activities are specified in the Activities column. The term is capitalized in the column title in conformance with normal editorial practice as a title, rather than as a definition**
7. **For purposes of this standard, the control circuit IS defined as one component type.**
8. **The SDT has determined that the fundamental concerns of Requirement R1, Part 1.5 and the associated changes are addressed within the PSMP definition, and that Requirement R1, Part 1.5 is not necessary. Therefore, it has been removed. Requirement R4 has also been re-drafted to address various related concerns noted within comments. The associated VSL has also been revised. Please see Supplementary Reference Document, Section 8 for a discussion of this.**
9. **In consideration of your comment, "six" has been modified to "twelve" in the Implementation Plan for Requirement R1, making it consistent with the remainder of the Implementation Plan.**
10. **Table 1-4 has been further modified for clarity**
11. **In response to many comments, including yours, the SDT has removed 4.2.5.5 from the Applicability of the standard.**

Organization	Yes or No	Question 5 Comment
12. The FERC NOPR is a notice-of-proposed-rulemaking and is not yet a directive. At such a time as a directive is published, NERC will take the necessary actions to address it.		
Platte River Power Authority System Maintenance	Yes	1. Please clarify what is required by R1.5: Identify calibration tolerances or other equivalent parameters for each Protection System component type that establish acceptable parameters for the conclusion of maintenance activities required. Is the intent a brief summary for each component type in the PSMP that would cover all equipment within that component type, or is it a detailed list of each piece of equipment within each component type? 2. The inclusion of dated check-off lists in M4 provides much needed clarity to the list of evidence.
Response: Thank you for your comments. **1. The SDT has determined that the fundamental concerns of Requirement R1, Part 1.5 and the associated changes are addressed within the PSMP definition, and that Requirement R1, Part 1.5 is not necessary; therefore, it has been removed. Requirement R4 has also been re-drafted to address various related concerns noted within comments. The associated VSL has also been revised. Please see Supplementary Reference Document, Section 8 for a discussion of this.** **2. Thank you for your support.**		
Electric Market Policy	Yes	1. The draft to PRC-005-2 contains defined terms that upon approval will remain with the standard rather than being moved to the Glossary of Terms. These terms when used in the Requirements are not designated in any way (e.g., capitalization, bold, etc.) to point the reader back to the in-standard definition. 2. Need to explicitly state the intent of the SDT to either (1) use the newly defined term “Protection System (modification)” only in this standard (PRC-005-2) or (2) replace the existing definition of the existing term in the “Glossary of Terms Used in NERC Reliability Standards” with the proposed definition for the existing term. 3. The language used in Footnote 1 on Attachment A does not agree with the definition of Countable events provided elsewhere in the draft standard. Suggest footnote be removed. 4. Requirement R1.5 uses the phrase “or other equivalent parameters” which is confusing. Suggest replacing with “or acceptance criteria.” Requirement R1.5 should read as follows: “Identify calibration program.” The currently proposed language focuses on specific calibration tolerances and acceptance parameters. These tolerances are developed on a per device, per location basis and would be captured at a procedural level, not a program level. To add this at a program level would only complicate the program and would not lend any improvement to the reliability of the bulk electric system. We recommend maintaining a general calibration requirement, similar to what is stated above, for an entity to develop their calibration program. 5. Requirement 2 Component should be replaced with Component Type. Creating a program to monitor the

Organization	Yes or No	Question 5 Comment
		equipment at this level of equipment would not add any value to the bulk electric system as all components should already be included in component type maintenance tasks. Recommend removing the definition of Component. 6. The requirement to address "monitoring attributes" in Requirement 2 for time based maintenance program is unclear, onerous and unnecessary for a reliable protection system program. 7. Requirement (R4) should identify correctible maintenance issues not the resolution of these issues. The language in R4.2 should strike correcting maintenance issues related to R1.5 and instead state: Any maintenance correctible issues found during the maintenance activity should be identified" 8. Table 1.2 change time frame from 3 months to 3 years.
Response: Thank you for your comments. **1. The standard capitalizes defined terms only when they refer to terms which are (or will be) in the NERC Glossary of Terms. Terms will generically be capitalized when appearing at the beginning of a sentence or within a title, in accordance with common editorial practice.** **2. The statement of the definition has been revised in the standard as "NERC Board of Trustees Approved Definition", but will remain in the posted draft standard until it is successfully balloted for the convenience of stakeholders.** **3. The footnote has been removed.** **4. The SDT has determined that the fundamental concerns of Requirement R1, Part 1.5 and the associated changes are addressed within the PSMP definition, and that Requirement R1, Part 1.5 is not necessary; therefore, it has been removed. Requirement R4 has also been re-drafted to address various related concerns noted within comments. The associated VSL has also been revised. Please see Supplementary Reference Document, Section 8 for a discussion of this.** **5. The SDT disagrees; monitoring attributes must be present on the individual components as actually installed, not to the overall component type.** **6. The SDT believes that the verifiable presence of the monitoring attributes on the individual components as installed is a necessary element of using the extended maintenance intervals that result from the monitoring. If you consistently use specific monitoring attributes on all components within a group, they may be able to address these attributes on a global basis. If an entity does not wish to document these attributes, they are free to apply the maintenance intervals and activities specified for the unmonitored components.** **7. Requirement R4 has been revised. The SDT believes it important that the entity initiate resolution of maintenance correctable issues, in addition to simply identifying them.** **8. The SDT believes that the 3-month interval is proper for verification of the functionality of unmonitored communications systems.**		
Bonneville Power Administration	Yes	Some of the maintenance tasks need to be defined: 1. The state of charge of each individual cell may need to be better defined. There are means to verify the

Organization	Yes or No	Question 5 Comment
		state of charge of the entire bank, but not each individual cell. 2. Battery continuity needs to be defined.- There is no mention to what the limits are for the "other equivalent parameters" when performing maintenance activities, just that they need to be identified. There are a large number of battery models which creates a large contrast of parameters, which cannot be grouped together. It is also difficult to get baseline values for older battery models which could result in moving baselines until they become more accurate as the database is populated. 3. If corrective actions are required, is there a maximum allowable duration for when they need to be resolved? 4. The maximum allowable maintenance for station batteries (impedance testing and performance/service testing) is too frequent and suggest an extension or alternative testing methods to stay in compliance. The frequency with which BPA performs the 18 month maintenance tasks as prescribed in the standard are on a 24 month interval along with visual inspections and voltage measurements monthly.BPA has seen success with this maintenance program with the ability to identify suspect cells or entire banks with adequate time to perform corrective actions such as repairs or replacements. 5. BPA also does not perform routine capacity testing, this is an as required maintenance task to confirm/validate our other test results if needed. BPA would like to see clarification for these issues before we can fully support this standard.
Response: Thank you for your comments. **1. Table 1-4 has been revised to remove "state of charge" from the activities.** **2. This is thoroughly discussed in Section 15.4 of the Supplementary Reference Document.** **3. No. The SDT appreciates that some corrective actions for maintenance correctable issues may take an extended period of time to complete, and has therefore not included completion of the corrective actions within PRC-005-2.** **4. The SDT believes that the 18-month interval is proper for these activities.** **5. For vented lead-acid and valve-regulated lead batteries, alternative activities are specified if desired instead of capacity tests. If Ni-Cad batteries are used, capacity tests are required.**		
Santee Cooper	No	We do not agree with the addition of Requirements 1.5 and 4.2 without work on or review by the Power System Maintenance and Testing Drafting Team. While some maintenance activities on some component types (such as calibration testing of electromechanical relays) translate inherently well into these requirements, the requirements of tolerances and documentation do not fit as well to all maintenance activities on other types of equipment considered part of the protective system. These requirements need to

Organization	Yes or No	Question 5 Comment
		be worked on through the drafting team to make them viable and effective for all protective system component types.
Response: Thank you for your comments. The SDT has determined that the fundamental concerns of Requirement R1, Part 1.5 and the associated changes are addressed within the PSMP definition, and that Requirement R1, Part 1.5 is not necessary; therefore, it has been removed. Requirement R4 has also been re-drafted to address various related concerns noted within comments. The associated VSL has also been revised. Please see Supplementary Reference Document, Section 8 for a discussion of this.		
NERC Staff	Yes	1. Commissioning (Initial) Testing: During development of PRC-005-2, NERC staff has observed a trend in system disturbances involving Protection System problems that should have been identified and corrected during commissioning (initial) testing. While NERC staff recognizes that the addition of commissioning testing may be unrealistic at this stage in the standard drafting process, we want to emphasize its importance. If the SDT chooses to leave commissioning testing out at this juncture, we plan to pursue other avenues to ensure its eventual inclusion through a separate standards project. NERC staff agrees with the SDT's opinion that without commissioning testing, a registered entity responsible for compliance with this standard cannot provide proof of its interval testing period as required by the standard. As soon as the entity puts the protective scheme into service, time "0" for interval testing begins. The next testing interval would be some specific number of years in the future from time "0. "An entity's failure to properly commission new protection system equipment has caused or exacerbated several recent events, greatly impacting BPS reliability. The following are examples of errors that were not detected during commissioning. These undetected errors were observed by NERC staff during event analysis and investigation activities: oFailure to apply correct relay settings. This has occurred repeatedly and has been due to improper procedures, poor document control, misapplication or miscalibration of the relay, or a combination of the above. oFailure to install the proper CT or PT ratio occurred due to poor document control practices and resulted in an undesired protection system response after the equipment was placed in service. oFailure to conduct a functional test of new control circuits to the schematic diagram resulted in an undesired protection system response after equipment was placed in service. oAn incorrect CT ratio was not detected during commissioning, and the equipment was subsequently placed in service. Because in-service testing was not performed, the error remained undetected until the relay misoperated during a fault. Many of the above conditions can remain undetected for extended periods, until they are revealed by a

Organization	Yes or No	Question 5 Comment
		relay misoperation during fault or heavy load conditions. The affects resulting from these cases could have been prevented with proper commissioning testing. We believe that by requiring commissioning testing for new protection system equipment, the reliability of BPS would be improved. 2. Requirement 2:In Requirement 2, it is unclear what is meant by “shall verify those components possess the monitoring attributes identified in Tables 1-1 through 1-5 in its PSMP” because the use of terms in the Requirement is not consistent with the column headings used in Tables 1-1 through 1-5. It also is not clear that components need not possess all attributes; rather, they must possess all attributes consistent with the Maximum Maintenance Interval specified in an entity’s PSMP. NERC staff recommends revising R2 to provide additional clarity as follows:”Each Transmission Owner, Generator Owner, and Distribution Provider that uses maintenance intervals for monitored Protection Systems described in Tables 1-1 through 1-5, shall verify those components possess the monitoring attributes Component Attributes identified in the first column of Tables 1-1 through 1-5 consistent with the Maximum Maintenance Interval specified in its PSMP.”
Response: Thank you for your comments. **1. Thank you for your comments.** **2. Requirement R2 of the standard has been modified as you suggested.**		
FirstEnergy	Yes	REQUIREMENTS 1. Requirement R1 - Subpart 1.5 - We do not support this subpart for the following reasons and offer the following suggestions: To satisfy R1.5, a calibration tolerance or other equivalent parameter would have to be established for each item included in the definition. Many devices which may have similar functionality may also have different performance criteria that would preclude the use of a "one size fits all" calibration tolerance. Many of these criteria are provided by the manufacturer and often vary by manufacturer for a similar device. It would be very difficult to specify in your program all of the calibration tolerances or other equivalent parameters associated with the protection system components. Therefore, we suggest the team delete Subpart 1.5 of Req. R1, and revise Subpart 4.2 of Req. R4 to read: "Initiate resolution of any identified maintenance correctable issues at the conclusion of maintenance activities for Protection System components." IMPLEMENTATION PLAN 2. On pg. 2 of the implementation plan, under "Retirement of Existing Standards", the statement "The existing standards PRC-005-1, PRC-008-0, PRC-011-0, and PRC-017-0 shall be retired upon regulatory approval of PRC-005-2" is not accurate. Since the new PRC-005-2 standard allows for at least 12 months

Organization	Yes or No	Question 5 Comment
		to become compliant with Requirement R1 - establish a Protection System Maintenance Program (PSMP) -the existing standards are still effective during this time. Additionally, we have concerns with the "General Considerations" describing protocols for compliance audits conducted during the allowed 12 month development period of the PSMP and that entities could specify for "each component type" whether maintenance of that component is being performed according to its maintenance program under the "retired" PRC maintenance standards or the new PRC-005-2 standard. In our view, this creates a level of compliance complexity for both the Registered Entity and Regional Entity that should be avoided in the transition to PRC-005-2. FirstEnergy proposes that the Implementation Plan state that the existing standards remain in effect for one year past applicable approval (NERC Board or Regulatory) and that they are retired coincident with the one-year transition to Requirement R1 of PRC-005-2 which would establish all Registered Entities having a new PSMP per the expectations of PRC-005-2. At that time all entities would be required to be under the new PRC-005-2 standard and begin implementing their PSMP per the phased-in Implementation Plan for the remaining requirements. To summarize, per our above discussion we propose the team perform the following:1. Revise the Implementation Plan section titled "Retirement of Existing Standards" section to read as follows: "The existing Standards PRC-005-1, PRC-008-0, PRC-011-0 and PRC-017-0 shall be retired on the first day of the first calendar quarter twelve months following applicable regulatory approvals, or in those jurisdictions where no regulatory approval is required, on the first day of the first calendar quarter 12 months following the Board of Trustees adoption"2. Remove the entire "General Considerations" section from the Implementation Plan. 3. The bulleted item under the section titled "Implementation plan for R1" has a discrepancy in the time allowed to implement R1 between entities applicable to regulatory approval of the standard versus those in jurisdictions where no regulatory approval is needed and base their adherence per the Board of Trustee adoption. Please revise to reflect a 12 month transition period for each. DEFINITIONS 4. Maintenance Correctable Issue - This is a maintenance standard and this concept gets into the long term repair activities. Is this really appropriate in this standard? If NERC feels repairing is critical to BES reliability, then they should probably initiate a standard in that area. 5. Component - Regarding the phrase "local zone of protection", why is this in quotes? Is there a narrow definition for this? If so, this term should be defined also. DATA RETENTION SECTION 6. 1.3 Regarding the data retention for Req. R3 and R4, it is not practical to keep potentially 24 years of data for components that are maintained every 12 years. We suggest rewording this to "For R3 and R4, Transmission Owner, Generator Owner, and Distribution Provider shall each keep documentation of the most recent performances of each distinct maintenance activity for the Protection System components, or to the

Organization	Yes or No	Question 5 Comment
		previous scheduled audit date, whichever is longer". 7. ATTACHMENT A - FOOTNOTE 1This footnote regarding countable events needs to be revised to match the definition of countable events found at the beginning of the standard.
Response: Thank you for your comments. **1. The SDT has determined that the fundamental concerns of Requirement R1, Part 1.5 and the associated changes are addressed within the PSMP definition, and that Requirement R1, Part 1.5 is not necessary; therefore, it has been removed. Requirement R4 has also been re-drafted to address various related concerns noted within comments. The associated VSL has also been revised. Please see Supplementary Reference Document, Section 8 for a discussion of this.** **2. The SDT had concluded that Requirement R2 is redundant with Requirement R1, Part 1.4, and has deleted Requirement R2 (together with the associated Measure and VSL).** **3. The Implementation Plan for Requirement R1 has been modified as you suggest.** **4. The SDT believes that the activities necessary to restore a Protection System component to proper service is an essential part of the PSMP. Please note that the related requirements only address initiation of the corrective actions, not completion, in deference to the extended period of time that some of these activities may take.** **5. The quotes have been removed from the definition of component. However, the SDT believes that this term is a commonly-understood term within the industry.** **6. In order that a Compliance Monitor can be assured of compliance, the SDT believes that the Compliance Monitor will need the data of the most recent performance of the maintenance, as well as the data of the preceding one to validate that entities have been in compliance since the last audit (or currently, since the beginning of mandatory compliance). The SDT has specified the data retention in the posted standard to establish this level of documentation. This seems to be consistent with the current practices of several Regional Entities.** **7. This footnote has been removed.**		
Florida Municipal Power Agency	Yes	1. UFLS and UVLS maintenance and testing is greatly expanded, e.g., we interpreted PRC-008/011 as being only the UFLS/UVLS equipment. The new PRC-005 sweeps in other protection system components, e.g., communications (probably not applicable), voltage and current sensing devices (e.g., instrument transformers), Station DC supply, control circuitry. What's key about this is that these components are all part of distribution system protection, so, these activities would not be covered by other BES protection system maintenance and testing. I'm sure we are testing batteries and the like, but, we are probably not testing battery chargers and control circuitry, and, in many cases distribution circuits are such that it is very difficult, if not impossible, to test control circuitry to the trip coil of the breaker without causing an outage of the customers on that distribution circuit. There is no real reliability need for this either. Unlike Transmission and Generation Protection Systems which are needed to clear a fault and

Organization	Yes or No	Question 5 Comment
		may only have one or two back-up systems, there are thousands and thousands of UFLS relays and if one fails to operate, it will not be noticeable to the event. It does make sense to test the relays themselves in part to ensure that the regio0nsl UFLS program is being met, but, to test the other protection system components is not worthwhile. Note that DC Supplies and most of the control circuitry of distribution lines are "tested" frequently by distribution circuits clearing faults such as animals, vegetation blow-ins, lightning, etc., on distribution circuits, reducing the value of testing to just about null. However, this version is better than prior versions because it essentially requires the entity to determine it's own period of maintenance and testing for UFLS/UVLS for DC Supply and control circuitry. 2. Applicability, 4.2.1, should reflect the Y&W and Tri-State interpretation (Project 2009-17) of "transmission Protection System" and should state: "Protection Systems applied on, or designed to provide protection for a BES Facility and that trips a BES Facility" 3. Applicability, 4.2. - does not reflect the interpretation of Project 20009-10 that excludes non-electrical protection (e.g., sudden pressure relays) and auxiliary relays. Because the definition of Protection System (recently approved) does not clearly exclude "non-electrical" protection, the Applicability section should. For instance, a vibration monitor, steam pressure, etc. protection of generators, sudden pressure protection of transformers, etc. should not be included in the standard. An alternative is to change the definition of Protection System to make sure it only includes electrical 4. Table 1-4 requires a comparison of measured battery internal ohmic value to battery baseline. Battery manufacturers typically do not provide this value and one manufacturer states that the baseline test are to be performed after the battery has been in regular float service for 90 days. It is unclear how to comply with the requirement for the initial 90 days. Additionally, we would recommend that this requirement be modified to permit an entity to establish a “baseline” value based on statistical analysis of multiple test results specific to a given battery manufacturer/model. Several commenters previously expressed their concerns with performing capacity tests. While this may just be an entity’s preference, allowing an entity to establish a baseline at some point beyond the initial installation period would give entities the option of using the internal resistance test in lieu of a capacity test. 5. Small entities with only one or two BES substations may not have enough components to take advantage of the expanded maintenance intervals afforded by a performance-based maintenance program. Aggregating these components across different entities doesn’t seem too logical considering the variations at the sub-component level (wire gauge, installation conditions, etc.) 6. Trip circuits are interconnected to perform various functions. Testing a trip path may involve disabling other features (i.e. breaker failure or reclosing) not directly a part of the test being performed. Temporary modifications made for testing introduce a chance to accidentally leave functions disabled, contacts shorted, jumpers lifted, etc. after testing has been completed. Trip coils and cable runs from panels to breaker can be made to meet the requirements for monitored components. The only portions of the

Organization	Yes or No	Question 5 Comment
		circuitry where this may not be the case is in the inter- and intra-panel wiring. Because such portions of the circuitry have no moving parts and are located inside a control house, the exposure is negligible and should not be covered by the requirements. Entities will be at increased compliance risk as they struggle to properly document the testing of all parallel tripping paths. The interconnected nature of tripping circuits will make it difficult to count the number of circuits consistently for the purpose of calculating a VSL.
Response: Thank you for your comments. **1. For UFLS and UVLS, the maintenance activities related to station dc supply and control circuitry are somewhat constrained relative to similar activities for Protection Systems in general. Regardless, without proper functioning of these component types, UFLS and UVLS will not respond as expected, and will therefore degrade BES system reliability, particularly during the stressed system conditions for which UFLS and UVLS are installed. Relative to control circuitry, Table 1-5 specifically excludes UFLS and UVLS from maintenance activities relate to the interrupting device trip coil.** **2. This interpretation is not yet approved by FERC. When this interpretation is approved, the SDT will incorporate it within PRC-005-2** **3. The recently-balloted revision of the definition of Protection System, which has been approved by the NERC Board of Trustees and will soon be filed with FERC for approval, clearly includes only protective relays that respond to electrical quantities. As for auxiliary relays, the interpretation to which you refer states that they are not explicitly included, but are included to the degree that an entity's Protection System control circuitry addresses them (which has been identified as a reliability gap), and are being added to PRC-005-2 to resolve that gap.** **4. Typical baseline values for various types of lead-acid batteries can be obtained from the test equipment manufacturer, perhaps the battery vendor, and perhaps other sources for batteries that are already in service. For new batteries, the initial battery baseline ohmic values should be measured upon installation and used for trending.** **5. Entities are not required to use performance-based maintenance programs. Requirement R3 and Attachment A are provided for the use of entities that can (and desire to) avail themselves of this approach.** **6. The requirement relative to control circuitry does not explicitly require trip or functional testing of the entire path; it requires that entities verify all paths without specifying the method of doing so. Please see Section 15.5 of the Supplementary Reference Document for a detailed discussion.**		
PSEG Companies ("Public Service Enterprise Group Companies")	Yes	1. The facilities listed in 4.2.5.5 include protection systems for "system connected" station service transformers associated with generators that are part of the BES. If a station service transformer is connected to a non BES bus then it would still fall under the PRC5 applicability requirements as written. The FAQs discuss relays associated with station auxiliary loads as not included in the program requirements. The non BES connected transformers should be included in that same category of equipment. 2. From the FAQ's - "Relays which trip breakers serving station auxiliary loads such as pumps, fans, or fuel handling equipment, etc., need not be included in the program even if the loss of the those loads could

Organization	Yes or No	Question 5 Comment
		result in a trip of the generating unit. Furthermore, relays which provide protection to secondary unit substation (SUS) or low switchgear transformers and relays protecting other downstream plant electrical distribution system components are not included in the scope of this program even if a trip of these devices might eventually result in a trip of the generating unit." Suggest the following added details be considered to be consistent with intent of BES connected facilities. Revise Description 4.2.5.5 as follows: "Protection systems for BES system connected station service transformers connected for generators that are part of the BES". 3. With respect to DC supply systems (batteries, chargers),the implementation plan is too aggressive. Some battery checks will have to be done on a 3 month interval, and entities will be required to be compliant with this new frequency in 1 Calendar year. This timeframe is unreasonable and needs to be pushed back to at least 2 years. 4. PSEG is also asking for clarification to the Supplementary reference document: On page 4, section 2.3 it states that the standard is designed to ONLY include "relays that detect a fault on the BES and take action in response to that fault". If PSEG is interpreting this correctly, this is a massive shift from the existing PRC-005-1 standard. The existing PRC-005-1 includes all distribution relays that trip a BES breaker to be part of the scope. In this revision, PRC-005-2 would exclude those distribution relays if they are designed to act for faults on the distribution system. PSEG would fully support this interpretation. PSEG would like this clarified and confirmed. This is very important.
Response: Thank you for your comments. **1. The Applicability of the draft Standard had been revised to remove "system-connected station service transformers".** **2. The FAQs have been merged into the Supplementary Reference Document; this discussion has been revised.** **3. The Implementation Plan for Requirement R4 has been revised to add one year to all established dates.** **4. Section 2.3 of the Supplementary Reference Document has been extensively revised, and the sentence to which you refer is no longer present. As for your comment, "The existing PRC-005-1 includes all distribution relays that trip a BES breaker to be part of the scope," the SDT believes that this is an element of a Regional practice regarding PRC-005-1, and entities should expect to comply with PRC-005 as established within the NERC Standard and further defined by Regional practice.**		
MRO's NERC Standards Review Subcommittee	Yes	1. In the Purpose statement delete "affecting" and replace it with "protecting". The purpose of the standard deals with systems that protect the BES. 2. In sections R1 and R4.2.1 delete "applied on" as unneeded and potentially confusing. The goal is to cover Protection Systems designed to protect the BES.

Organization	Yes or No	Question 5 Comment
		3. The NSRS believes that Article 1.4 needs to be deleted from the standard. It is redundant and serves not purpose. 4. The NSRS believes that Article 1.5 needs to be deleted from the standard. There is a major concern on what an “acceptable parameter” is and how it would be interpreted by the Regional Entities. 5. The NSRS believes that Article 4.2 needs to be deleted from the standard. There is no need for this article if Article 1.5 is deleted. 6. Section 4.2 Applicable Facilities: We are concerned with this paragraph being interpreted differently by the various regions and thereby causing a large increase in scope for Distribution Provider protection systems beyond the reach of UFLS or UVLS.4.2.1 Protection Systems applied on, or designed to provide protection for, the BES. The description is vague and open for different interpretations for what is “applied on” or “designed to provide protection”. According to the November 17, 2010 Draft Supplementary Reference page 4, the Standard will not apply to sub-transmission and distribution circuits, but will apply to any Protection System that is designed to detect a fault on the BES and take action in response to the fault. The Standard Drafting Team does not feel that Protection Systems designed to protect distribution substation equipment are included in the scope of this standard; however, this will be impacted by the Regional Entity interpretations of ‘protecting” the BES. Most distribution protection systems will not react to a fault on the BES, but are caught up in the interpretation due to tripping a breaker(s) on the BES. 7. Section F Supplementary Reference Documents: The references listed in this section refer to 2009 dates and do not match with the 2010 reference documents supplied for comment. 8. Table 1-4 Component Type Station dc Supply: o “Any dc supply for a UFLS or UVLS system” - This should not tied to the same testing interval as control circuits. The dc supply system is significantly different from control circuits and should have a maximum maintenance period as other dc supplies do. 9. Replace the words “perform as designed” on page 14 of Table 1-4 with “operate within defined tolerances.” 10. Table 1-5 Component Type Control Circuitry: a. This table allows for unmonitored trip coils for UFLS or UVLS breakers to have “no periodic maintenance”. “Unmonitored control circuitry associated with protective functions” should also have an exclusion for UFLS and UVLS circuitry that would allow for “no periodic maintenance”. b. There is a concern that requiring the electrical testing and maintenance of Electromechanical trip or Auxiliary devices will force entire bus outages to be scheduled, which will compromise the BES

Organization	Yes or No	Question 5 Comment
		reliability more by forcing utilities across the US to unnecessarily take multiple non-faulted BES elements out of service. Such testing is also likely to introduce human error that will cause outages such as items outlined in the NERC lessons learned" and therefore such testing will result in more outages than actual failures.

Response: Thank you for your comments.

1. **The "Purpose" is defined by the SAR.**
2. **Requirement R1 and Requirement R4, Part 4.2.1 have been modified as you suggested.**
3. **The SDT disagrees; Requirement R1, Part 1.4 supports Requirement R1, Part 1.2, and seems necessary to assure that entities have appropriately applied the longer intervals associated with monitored components.**
4. **The SDT has determined that the fundamental concerns of Requirement R1, Part 1.5 and the associated changes are addressed within the PSMP definition, and that Requirement R1, Part 1.5 is not necessary; therefore, it has been removed. Requirement R4 has also been re-drafted to address various related concerns noted within comments. Please see Supplementary Reference Document, Section for a discussion of this. The associated VSL has also been revised.**
5. **The SDT has determined that the fundamental concerns of Requirement R1, Part 1.5 and the associated changes are addressed within the PSMP definition, and that Requirement R1, Part 1.5 is not necessary; therefore, it has been removed. Requirement R4 has also been re-drafted to address various related concerns noted within comments. The associated VSL has also been revised. Please see Supplementary Reference Document, Section 8 for a discussion of this.**
6. **Applicability 4.2.1 has been revised to remove 'applied on". The SDT believes that this addresses your concern. Applicability 4.2.2 and 4.2.3, respectively, address UFLS and UVLS specifically, and are not related to Applicability 4.2.1. The Supplementary Reference Document has been revised to clarify.**
7. **The date in Clause F of the standard related to the Supplementary Reference Document has been revised.**
8. **The SDT disagrees. Station dc supply for UFLS/UFLS only is limited in its impact, and the SDT believes that using the same intervals as for the related control circuits.**
9. **"Tolerances" does not fully describe the parameters for maintenance of station dc supply; "perform as designed" is far more inclusive.**
10. **a. The SDT intends that tripping of the interrupting device for UFLS/UVLS is not required, but that the other portions of the dc control circuitry still shall be maintained. See Section 15.3 of the Supplementary Reference Document.**

    b. The SDT believes that mechanical solenoid-operated devices share performance attributes (and failure modes) with electromechanical relays and need to be tested at similar intervals. Performance-Based maintenance is an option to increase the intervals if the performance of these devices supports those intervals

Organization	Yes or No	Question 5 Comment
Western Area Power Administration	No	
TransAlta Centralia Generation Partnership	No	
NextEra Energy	Yes	The draft standard is too prescriptive. 1. Requirement R1, Part 1.5 would be overwhelming if approved. Requirement R1, Part 1.5 should be deleted. 2. Requirement R4, Part 4.2 phrase "established in accordance with Requirement R1, Part 1.5" should be deleted. The standard without these additional requirements would be sufficient to establish that the Protection System is maintained and protects the BES. 3. Table 1-2 Component Type Communications Systems Maximum Maintenance Interval of 3 Calendar Months to verify that the communications system is functional for any unmonitored communications system is unyielding. Most communication failures are caused by power supply failures which Next Era does monitor. Based on experience and monitoring of communication power supplies, 12 calendar months would be adequate. The maximum maintenance interval should be changed from 3 calendar months to 12 calendar months. 4. Table 1-4, Component Type Station dc Supply Maximum Maintenance Interval of 3 Calendar Months to inspect electrolyte levels on “Any unmonitored station dc supply not having the monitoring attributes of a category below. (excluding UFLS and UVLS)” is too stringent. Verifying battery charger float voltage every 18 calendar months is sufficient to prevent excessive gassing and water loss of battery cells. The maximum maintenance interval should be changed from 3 calendar months to 6 calendar months. 5. Table 1-4, Component Type Station dc Supply Maximum Maintenance Interval of 3 Calendar Months to measure the internal ohmic values on “Unmonitored Station dc supply with Valve Regulated Lead-Acid (VRLA) batteries that does not have the monitoring attributes of a category below. (excluding UFLS and UVLS)” is too stringent. With the standard’s requirement to verify the float voltage every 18 calendar months, measuring the internal ohmic values every 6 calendar months would be adequate. The maximum maintenance interval should be changed from 3 calendar months to 6 calendar months.

Response: Thank you for your comments.

1. The SDT has determined that the fundamental concerns of Requirement R1, Part 1.5 and the associated changes are addressed within the PSMP definition, and that Requirement R1, Part 1.5 is not necessary; therefore, it has been removed. Requirement R4 has also been re-drafted to

Organization	Yes or No	Question 5 Comment
address various related concerns noted within comments. The associated VSL has also been revised. Please see Supplementary Reference Document, Section 8 for a discussion of this. **2. The SDT has determined that the fundamental concerns of Requirement R1, Part 1.5 and the associated changes are addressed within the PSMP definition, and that Requirement R1, Part 1.5 is not necessary; therefore, it has been removed. Requirement R4 has also been re-drafted to address various related concerns noted within comments. The associated VSL has also been revised. Please see Supplementary Reference Document, Section 8 for a discussion of this.** **3. The activity to which you refer is an inspection-based activity based on overall functionality, and addresses functionality of various communications technologies. If an entity monitors the power supply (as suggested), doing so addresses one portion of the functionality, but does not address channel integrity, etc.** **4. The SDT disagrees, and believes that the specified activities, at the specified intervals, are appropriate.** **5. Table 1-4(b) has been revised as you suggested.**		
City of Austin DBA Austin Energy	Yes	1. The Requirement R1.5. is vague and the intent is not well understood. We recommend it be rewritten to clarify the intent. 2. In the Requirement R2. the phrase "... shall verify those components possess the monitoring attributes ..." is too vague and not easily understandable. We recommend this requirement be rewritten.
Response: Thank you for your comments. **1. The SDT has determined that the fundamental concerns of Requirement R1, Part 1.5 and the associated changes are addressed within the PSMP definition, and that Requirement R1, Part 1.5 is not necessary; therefore, it has been removed. Requirement R4 has also been re-drafted to address various related concerns noted within comments. The associated VSL has also been revised. Please see Supplementary Reference Document, Section 8 for a discussion of this.** **2. The SDT had concluded that Requirement R2 is redundant with Requirement R1, Part 1.4, and has deleted Requirement R2 (together with the associated Measure and VSL).**		
PacifiCorp		
Southern Company Transmission	Yes	1. Page 5, 4.2. ("or initiate resolution") Comment ->> Standard does not specify to "follow through" to completion. Is record of completion required? 2. Page 5, 1.5. (1.5. Identify calibration tolerances or other equivalent parameters for each Protection System component type that establish acceptable parameters for the conclusion of maintenance

Organization	Yes or No	Question 5 Comment
		activities.) Comment ->> This is too vague, broad, general and all encompassing. For example, what is the calibration tolerance for "control circuitry" which is made up of many things such as wiring, auxiliary relays, trip coils, etc. We currently have calibration tolerances on electromechanical relays but not on all components of a protection system (communications systems, voltage and current sensing devices, station dc supply, control circuitry). To try to identify calibration tolerances or other equivalent parameters for each of these components would be extremely difficult and time consuming. Clarification is needed on what components or parts of components require calibration tolerances. Another option is to remove this requirement. 3. Page 5, 4.5. (4.2. Either verify that the components are within the acceptable parameters established in accordance with Requirement R1, Part 1.5 at the conclusion of the maintenance activities, or initiate resolution of any identified maintenance correctable issues.)Comment ->> See comments above on 1.5. Clarification is needed on what is required to verify that the components are within acceptable parameters. We feel it should be adequate to provide a simple way to verify this requirement such as to include this in our maintenance procedure (equipment is to be left within tolerance), provide closed work order, show "checked" check box, provide a simple statement that this was completed, or etc. We feel that having to provide detailed data such as "as found" / "as left" values is too complicated and time consuming. Please clarify or consider removing this requirement. 4. Page 6, M.4. ("and initiated resolution") Comment ->> Standard does not specify to "follow through" to completion. Is record of completion required? 5. Page 10, F.1 (July 2009) & F.2 (DRAFT 1.0 - June 2009) Comment ->> Need new dates and draft number. 6. Page 11 (For microprocessor relays, verify operation of the relay inputs and outputs that are essential ...) Comment ->> Does this require changing the state of the input contacts or can you just jumper voltage to the inputs and verify that the microprocessor relays acknowledged the change? 7. Page 17 ("Verify electrical operation(1)of EM trip and auxiliary devices(2).") Comment ->> (1) Is it required to verify that trip and auxiliary device contacts change state? If so, please state as a requirement.(2) We recommend that this requirement only includes EM aux LO / tripping relays that trip interrupting devices directly. Other EM aux relays such as BFI aux. relays should be excluded. Please state this clearly in the Standard. Note that these aux relays such as BFI aux relays are included

Organization	Yes or No	Question 5 Comment
		in the "unmonitored control circuitry associated with protective functions" requirement and will be verified on a 12 year interval. (3) Please consider including an elementary diagram to show what is included. 8. Page 17 (Verify all paths of the control and trip circuits.) Comment ->> Clarification needed. Is it required to perform a full functional test, i.e. trip breakers? Or is reading DC across trip contacts all that is required? 9. Page 14 (Table 1.4) Change the maintenance interval for unmonitored station dc supply from "3 Calendar Months" to "4 times annually". This facilitates compliance to the standard by creating completion milestones for batteries at the end of each quarter of the year. 10. Page 15 (Table 1.4The standard requires the establishment of a battery baseline for cell/unit internal ohmic values and the comparison of impedance readings every 18 calendar months to that baseline. Due to the lack of original impedance readings at the time of installation of the battery. Since in many cases no such data is available; it needs to be made clear that establishing a baseline from , from manufacturer's data, the most recent impedance test, or the first impedance test completed after the adoption of the new standard is acceptable

Response: Thank you for your comments.

1. **No. Full resolution of maintenance correctable issues may require extensive work; the SDT intends that INITIATION of the resolution is all that is required per PRC-005-2.**
2. **The SDT has determined that the fundamental concerns of Requirement R1, Part 1.5 and the associated changes are addressed within the PSMP definition, and that Requirement R1, Part 1.5 is not necessary; therefore, it has been removed. Requirement R4 has also been re-drafted to address various related concerns noted within comments. The associated VSL has also been revised. Please see Supplementary Reference Document, Section 8 for a discussion of this.**
3. **The SDT has determined that the fundamental concerns of Requirement R1, Part 1.5 and the associated changes are addressed within the PSMP definition, and that Requirement R1, Part 1.5 is not necessary; therefore, it has been removed. Requirement R4 has also been re-drafted to address various related concerns noted within comments. The associated VSL has also been revised. Please see Supplementary Reference Document, Section 8 for a discussion of this.**
4. **No. Full resolution of maintenance correctable issues may require extensive work; the SDT intends that INITIATION of the resolution is all that is required per PRC-005-2.**
5. **The date has been revised.**
6. **The SDT believes that it would be sufficient to apply voltage to the input and observe that the relay responds accordingly.**
7. **1 – "Verify" means "Determine that the component is functioning correctly". The SDT intends that the device be electrically operated, but not that**

Organization	Yes or No	Question 5 Comment
		additional verification be conducted during the electrical operation. However, the 12-year activity for unmonitored control circuitry would require verification of full functionality, including all of the related contacts. 2- The standard has been modified in consideration of your comment. 3 – An elementary diagram would be inappropriate in the standard. Additionally, the design of the control circuitry varies so widely from one application to another that it seems (to the SDT) that it would not be effective to include such an example in the Supplementary Reference Document. **8. The control circuitry can be tested in overlapping segments. It seems to the SDT that it is not necessary to trip the breakers with the functional test, as long as the entity performs the activities necessary to demonstrate that all overlapping segments will function properly.** **9. The SDT believes that your suggestion would not be effective in assuring periodic maintenance of the dc supply.** **10. The station battery baseline value is up to the entity to determine. Please see Clause 15.4.1 of the Supplementary Reference Document for a discussion of this.**
Clark Public Utilities	No	
Exelon	Yes	1. In response to Exelon's comments provided to drafts 1 and 2 of PRC-005, the SDT did not explain why a conflict with an existing regulatory requirement is acceptable. The SDT responded that a conflict does not exist and that the removal of grace periods simply is there to comply with FERC Order directive 693. This response does not answer or address dual regulation by the NRC and by the FERC. Specifically, the request has not been adequately considered for an allowance for NRC-licensed generating units to default to existing Operating License Technical Specification Surveillance Requirements if there is a maintenance interval that would force shutting down a unit prematurely or become non-compliant with PRC-005. Therefore, Exelon requests that the SDT communicate with the NRC and with the FERC to ensure a conflict of dual regulation is not imposed on a nuclear generating unit without the necessary evaluation. 2. In addition, although Exelon Nuclear agrees with the SDT that the maximum allowed battery capacity testing intervals of not to exceed 6 calendar years for vented lead acid or NiCad batteries (not to exceed 3 calendar years for VRLA batteries) could be integrated within the plant's routine 18 month to 2 year interval refueling outage schedule, the SDT has not considered that nuclear refueling outages may be extended past the 18 month to 2 year "normal" periodicity. There are some unique factors related to nuclear generating units that the SDT has not taken into consideration in that these units are typically online continuously between refueling outages without shutting down for any other required maintenance. Historically, generating units have at times extended planned refueling outage shutdown dates days and even weeks due to requests from transmission operations, fuel issues and electrical demand. Without the grace period exclusion currently allowed by existing maintenance programs, a nuclear plant will be forced to either extend outage duration to include testing on an every other refueling outage (i.e., every four years to ensure compliance for a typical boiling water reactor) or leave the testing on a six year periodicity with the vulnerability of a forced shut down simply to perform maintenance to meet the six year periodicity

Organization	Yes or No	Question 5 Comment
		or a self report of non-compliance. To ensure compliance, the nuclear industry will be forced to schedule battery testing on a four year periodicity to ensure the six year periodicity is met, thus imposing a requirement on nuclear generating units that would not apply to other types of generating units. 3. In addition, Exelon has the following technical comments a. Sections 4.2.5.4 and 4.2.5.5 need to clearly state that only protection which affects the BES is within the scope of the PRC-005. b. There is not enough clarity in the statement "each protection system component type" for one to stay at the component level vs. dropping to sub-component level. If sub-components reviews are required, the effort becomes unmanageable. Therefore the Standard should identify calibration tolerances or other equivalent parameters. Suggest rewording to "each protection system major component type"
Response: Thank you for your comments. **1. If several different regulatory agencies have differing requirements for similar equipment, it seems that the entity must be compliant with the most stringent of the varying requirements. In the cited case, an entity may need to perform maintenance more frequently than specified within the requirements to assure that they are compliant.** **2. The 18-month (and shorter) interval activities are activities that can be completed without outages – primarily inspection-related activities. An entity may need to perform maintenance more frequently than specified within the requirements to assure that they are compliant.** **3. a. Applicability 4.2.5.5 has been removed. Generator-connected station service transformers are essential to the continuing operation of the generating plant; therefore, protection on these system components is included within PRC-005-2 if the generation plant is a BES facility.** **b.The SDT has determined that the fundamental concerns of Requirement R1, Part 1.5 and the associated changes are addressed within the PSMP definition, and that Requirement R1, Part 1.5 is not necessary; therefore, it has been removed. Requirement R4 has also been re-drafted to address various related concerns noted within comments. The associated VSL has also been revised. Please see Supplementary Reference Document, Section 8 for a discussion of this.**		
Manitoba Hydro	Yes	1) We disagree with the requirements for battery maintenance outlined in table 1-4. In particular the requirement for a 3 month check on electrolyte level seems too frequent based on our experience. We would like to point out that although IEEE std 450 (which seems to be the basis for table 1-4) does recommend intervals it also states that users should evaluate these recommendations against their own operating experience. 2) Also, the Implementation Plan is not consistent for areas requiring regulatory approval and areas requiring regulatory approval. The 6 month time frame proposed for R1 for areas not requiring regulatory approval is not achievable and is not consistent with areas requiring regulatory approval. To be consistent, the effective

Organization	Yes or No	Question 5 Comment
		date for R1 in jurisdictions where no regulatory approval is required should be the first day of the first calendar quarter 12 months after BOT approval.
Response: Thank you for your comments. **1. The SDT believes that the 3-month interval specified in the standard is appropriate.** **2. In consideration of your comment, "6" has been modified to "12" in the Implementation Plan for Requiremnet R1.**		
Dynegy Inc.	Yes	For R1.5, we feel to much is being asked for since this information is not easilly controlled and the tolerances vary over time.
Response: Thank you for your comments. The SDT has determined that the fundamental concerns of Requirement R1, Part 1.5 and the associated changes are addressed within the PSMP definition, and that Requirement R1, Part 1.5 is not necessary; therefore, it has been removed. Requirement R4 has also been re-drafted to address various related concerns noted within comments. The associated VSL has also been revised. Please see Supplementary Reference Document, Section 8 for a discussion of this.		
Oncor Electric Delivery Company LLC	Yes	Comment A: Oncor believes that Requirement R1 Part 1.5 of this Standard should be removed. It is too vague, intrusive, and divisive for what it brings to the reliability of the BES. Specifically it burdens all Transmission Owners, Generation Owners or Distribution Providers with the impossible task of having to "identify calibration tolerances or other equivalent parameters for each Protection System component type that establish acceptable parameters for the conclusion of maintenance activities." By definition a Protection System component type is "any one of the five specific elements of the Protection System definition" and "a component is any individual discrete piece of equipment included in a Protection System, such as a protective relay or current sensing device." What Requirement R1 part 1.5 with its associated High VSL in the Standard would decree is that all Transmission Owners, Generation Owners and Distribution Providers who "failed to establish calibration tolerance or equivalent parameters to determine if every individual discrete piece of equipment in a Protection System is within acceptable parameters" would be in violation of the Standard - with a High VSL. Oncor with over 98 years of Protection System maintenance experience feels that most Owners including itself would be non-compliant with this unclear, meddling and disruptive requirement no matter how long the implementation plan for the Standard is. Comment B: Oncor believes that in light of Comment "A" above Requirement R4 Part 4.2 must be modified to remove all references to Requirement R1 Part 1.5 of the Standard. The new requirement should be modified to read "Either verify that the components are within acceptable parameters at the conclusion of the maintenance activities or initiate any necessary activities to correct maintenance correctable issues." Also in order to assist both the owners and the compliance authorities who may question how one verifies that the components are within acceptable parameters the FAQ document should be modified to discuss how many

Organization	Yes or No	Question 5 Comment
		utilities are doing this with results that indicate either a pass or fail certified by the qualified persons performing maintenance. Comment C: Oncor feels that the wording "no less frequently than" found in Requirement R4 Parts 4.1.1 and 4.1.2 should be chanced back to the wording in the previous version of the Standard "not to exceed." Comment D: Oncor recommends that in light of Comment "A" above Measure M1 be modified to remove all reference to Requirement R1 Part 1.5. Comment E: Oncor, as stated in Comment "B" above, recommends that the FAQ document be modified to provide more information on what could be used for evidence that the Transmission Owner, Generation Owner or Distribution Provider has "initiated resolution of identified maintenance correctable issues." This will assist both the owners and the compliance authorities in answering the question of what constitutes proof that a maintenance correctable issue was identified. Comment F: The second and third paragraphs added under Compliance 1.3 Data Retention provide more information as to what data is required to be retained. Oncor feels that these two paragraphs will help the compliance authorities, the Transmission Owners, Generation Owners and Distribution Providers needed guidance of what is required for data retention.

Response: Thank you for your comments.

A. The SDT has determined that the fundamental concerns of Requirement R1, Part 1.5 and the associated changes are addressed within the PSMP definition, and that Requirement R1, Part 1.5 is not necessary; therefore, it has been removed. Requirement R4 has also been re-drafted to address various related concerns noted within comments. The associated VSL has also been revised. Please see Supplementary Reference Document, Section 8 for a discussion of this.

B. The SDT has determined that the fundamental concerns of Requirement R1, Part 1.5 and the associated changes are addressed within the PSMP definition, and that Requirement R1, Part 1.5 is not necessary; therefore, it has been removed. Requirement R4 has also been re-drafted to address various related concerns noted within comments. The associated VSL has also been revised. Please see Supplementary Reference Document, Section 8 for a discussion of this.

C. "No less frequently than" was adopted on recommendation of NERC Staff as the preferred method of addressing this requirement.

D. The SDT has determined that the fundamental concerns of Requirement R1, Part 1.5 and the associated changes are addressed within the PSMP definition, and that Requirement R1, Part 1.5 is not necessary; therefore, it has been removed. Requirement R4 has also been re-drafted to address various related concerns noted within comments. The associated VSL has also been revised. Please see Supplementary Reference Document, Section 8 for a discussion of this.

E. The SDT has decided to eliminate the FAQ and incorporate topics and discussion from the FAQ within the Supplementary Reference Document. Your comments will be considered within that activity.

Organization	Yes or No	Question 5 Comment
F. Thank you for your comment.		
Ingleside Cogeneration LP		The latest version of PRC-005-2 includes a new requirement (R1.5) to identify calibration tolerances or equivalent parameters that must be verified before a maintenance activity is considered complete. Although we understand the project team's intent, Ingleside Cogeneration LP is concerned that this requirement will lead to multiple interpretations of which tolerances or parameters are the most important. In addition, audit teams may expect to see certain values based upon their own sense of reliability. This is exactly the ambiguity that PRC-005-2 is trying to eliminate. In addition, calibration tolerances and reliability parameters may vary by equipment manufacturer or by configuration. It is not clear that documenting every scenario to demonstrate regulatory compliance is a benefit to BES reliability.
Response: Thank you for your comments. The SDT has determined that the fundamental concerns of Requirement R1, Part 1.5 and the associated changes are addressed within the PSMP definition, and that Requirement R1, Part 1.5 is not necessary; therefore, it has been removed. Requirement R4 has also been re-drafted to address various related concerns noted within comments. The associated VSL has also been revised. Please see Supplementary Reference Document, Section 8 for a discussion of this.		
Indiana Municipal Power Agency	Yes	Standard PRC-005-2 Draft 3 contains a section of "Definitions of Terms Used in Standard" that includes newly defined or revised terms uses in this proposed standard. There are a number of references made to these Terms in the Standard that are not capitalized. IMPA would propose that anywhere that the terms included in the "Definition of Terms Used" are used in the standard that they be capitalized. When any word is not capitalized in a standard then the common practice is to use the Webster Dictionary meaning. IMPA does not know why the SDT is reluctant to put these terms in the NERC Glossary of Terms, but by putting the terms in the glossary it would eliminate any confusion. When these terms are capitalized all registered entities will know that these are defined terms and will be able to consistently apply the definition without confusion. For example: 1.1 Address all Protection System component types would become1.1 Address all Protection System Component Types. If these terms are not capitalized in the standard (meaning they are not referring to the defined term) then the meaning of these terms could vary not only from utility to utility but also from Region to Region.
Response: Thank you for your comments. The standard capitalizes defined terms only when they refer to terms which are (or will be) in the NERC Glossary of Terms. Terms will generically be capitalized when appearing at the beginning of a sentence or within a title, in accordance with common editorial practice. If the terms were placed in the Glossary of Terms, the SDT is concerned that some future SDT, in order to utilize these terms, may change them in a fashion inconsistent with the intended usage within PRC-005-2.		

Organization	Yes or No	Question 5 Comment
South Carolina Electric and Gas		
Entergy Services	Yes	Adding Requirement 1.5 is a significant revision and raises questions as to how broadly an accuracy or equivalent parameter requirement and associated documentation would need to be addressed by entities and/or will be measured for compliance. Discussion on this new requirement does not seem to be addressed anywhere in the FAQ or Supplementary Reference documents. Additionally, to the best of our knowledge, the need for such a requirement was not brought up as a concern or comment on the prior draft version of this standard, and in the context of a requirement need, we don't believe it has been attributed to or actually poses any significant reliability risk. We do not believe this requirement is justified.
Response: Thank you for your comments. The SDT has determined that the fundamental concerns of Requirement R1, Part 1.5 and the associated changes are addressed within the PSMP definition, and that Requirement R1, Part 1.5 is not necessary; therefore, it has been removed. Requirement R4 has also been re-drafted to address various related concerns noted within comments. The associated VSL has also been revised. Please see Supplementary Reference Document, Section 8 for a discussion of this.		
Duke Energy	Yes	1. We have previously commented that the FAQ and Supplementary Reference documents should be made part of this standard. If that cannot be done, then more of the information in those documents needs to be included in the requirements in the standard to provide clarity. Compliance will only be measured against what is in the standard, and we need more clarity. 2. R1.4 and R1.5 need more information to provide clarity for compliance. It's unclear to us what the expectation is for compliance documentation for "monitoring attributes and related maintenance activities" in R1.4 and "calibration tolerances or other equivalent parameters" in R1.5. This is fairly straightforward for relays, but not for other component types. Either provide clarity or delete these requirements. 3. R4.2 - it is critical that more clarity be provided for R1.5 so that we can also understand what the compliance expectation is for R4.2 4. M4 - Need to clarify that these pieces of evidence are all "or", not "and" (i.e. any of the listed examples are sufficient for compliance). We reiterate the need for additional clarity on R1.5 and R4.2 such that compliance can be demonstrated for all component types. 5. Table 2 - We are fairly clear on the expectation for relays, but need more clarity on the expectation for other component types. Also, need to change the phrase "corrective action can be taken" to "corrective action can be initiated", consistent with the Supplementary Reference document.
Response: Thank you for your comments.		

Organization	Yes or No	Question 5 Comment
1. The SDT has decided to eliminate the FAQ and incorporate topics and discussion from the FAQ within the Supplementary Reference Document. The SDT believes that entities should be able to implement the standard without the Supplementary Reference. However, the SDT is also convinced that many entities may find the supporting discussion/rationale/etc useful, particularly to assist them in implementing the standard in an efficient manner. **2. Requirement R1, Part 1.4 has been modified for clarity. The SDT has determined that the fundamental concerns of Requirement R1, Part 1.5 and the associated changes are addressed within the PSMP definition, and that Requirement R1, Part 1.5 is not necessary; therefore, it has been removed. Requirement R4 has also been re-drafted to address various related concerns noted within comments. The associated VSL has also been revised. Please see Supplementary Reference Document, Section 8 for a discussion of this.** **3. The SDT has determined that the fundamental concerns of Requirement R1, Part 1.5 and the associated changes are addressed within the PSMP definition, and that Requirement R1, Part 1.5 is not necessary; therefore, it has been removed. Requirement R4 has also been re-drafted to address various related concerns noted within comments. The associated VSL has also been revised. Please see Supplementary Reference Document, Section 8 for a discussion of this.** **4. The SDT has provided examples of the sort of evidence that may serve to demonstrate compliance. The degree to which any single evidence type is sufficient is dependent on the completeness of the evidence itself. The Measure has been modified to clarify this point.** **5. Table 2 has been modified to be clearer. "Taken" has been replaced with "initiated" in consideration of your comment.**		
Wisconsin Electric Power Company		
Independent Electricity System Operator	Yes	1. Requirement R1, Part 1.5 is vague and needs clarification. It is not clear what "Identify calibration tolerances or other equivalent parameters" means and this may be subject to different interpretations by entities and compliance enforcement personnel. 2. Additionally, in the Implementation plan for Requirement R1, we recommend changing "six" to "fifteen" to restore the 3-month time difference between the durations of the implementation periods for jurisdictions that do and don't require regulatory approval, which existed in the previous draft. This change will ensure equity for those entities located in jurisdictions that do not require regulatory approval as is the case here in Ontario. More importantly it supports the IESO's strong belief in the principle that reliability standards should be implemented in an orderly and coordinated fashion across regions to ensure system reliability is not compromised.
Response: Thank you for your comments. **1. The SDT has determined that the fundamental concerns of Requirement R1, Part 1.5 and the associated changes are addressed within the PSMP definition, and that Requirement R1, Part 1.5 is not necessary; therefore, it has been removed. Requirement R4 has also been re-drafted to address various related concerns noted within comments. The associated VSL has also been revised. Please see Supplementary Reference**		

Organization	Yes or No	Question 5 Comment
Document, Section 8 for a discussion of this. **2. In consideration of your comment, "6" has been modified to "12" in the Implementation Plan for Requirement R1.**		
American Electric Power		1. Standards Requirement 1.5 and the reference to R1.5 in Requirement 4.2 should be removed. Specifying calibration tolerances for every protection system component type, while a seemingly good idea, represents a substantial change in the direction of the standard. It would be very onerous for companies to maintain a list of calibration tolerances for every protection system component type and show evidence of such at an audit. AEP believes entities need the flexibility to determine what acceptance criteria is warranted and need discretion to apply real-time engineering/technician judgment where appropriate. 2. Three different types of maintenance programs (time-based, performance-based and condition-based) are referenced in the standard or VSLs, yet the time-based and condition-based programs are neither defined nor described. Certain terms defined within the definition section (such as Countable Event or Segment) only make sense knowing what those three programs entail. These programs should be described within the standard itself and not assume knowledge of material in the Supplementary Reference or FAQ. 3. "Protective relay" should be a defined term that lists relay function for applicability. There are numerous 'relays' used in protection and control schemes that could be lumped in and be erroneously included as part of a Protection System. For example, reclosing or synchronizing relays respond to voltage and hence could be viewed by an auditor as protective relays, but they in fact perform traditional control functions versus traditional protective functions. 4. The Data Retention requirement of keeping maintenance records for the two most recent maintenance performances is a significant hurdle for any owners to abide by during the initial implementation period. The implementation plan needs to account for this such that Registered Entities do not have to provide retroactive testing information that was not explicitly required in the past.
Response: Response: Thank you for your comments. **1. The SDT has determined that the fundamental concerns of Requirement R1, Part 1.5 and the associated changes are addressed within the PSMP definition, and that Requirement R1, Part 1.5 is not necessary; therefore, it has been removed. Requirement R4 has also been re-drafted to address various related concerns noted within comments. The associated VSL has also been revised. Please see Supplementary Reference Document, Section 8 for a discussion of this.** **2. The term, "condition-based" has been removed from the draft standard. The other terms are used, but are clear in the context in which they are used.** **3. "Protective relay" is defined by IEEE, and the SDT sees no need to either change the definition or to repeat the definition within PRC-005. Further,**		

Organization	Yes or No	Question 5 Comment
the applicability of generically-described protective relays is defined by the Applicability clause of PRC-005-2. **4. In order that a Compliance Monitor can be assured of compliance, the SDT believes that the Compliance Monitor will need the data of the most recent performance of the maintenance, as well as the data of the preceding one to validate that entities have been in compliance since the last audit (or currently, since the beginning of mandatory compliance). The SDT has specified the data retention in the posted standard to establish this level of documentation. This seems to be consistent with the current practices of several Regional Entities.**		
ITC	Yes	1. We would like some further clarification on PRC-005-2 Draft 3, specifically on the statement in Table 1-4 for unmonitored station DC supply with VLA batteries. In the table it is mentioned that we are to perform either a capacity test every six years or verify that the station battery can perform as designed by evaluating the measured cell/unit internal ohmic values to station battery baseline, the latter statement is a little vague and needs further clarification with regards to the expectations from the standard. Please describe an acceptable method of establishing a baseline "measured cell/unit internal ohmic value" We would like to know what exactly is required. We measure the cell internal ohmic value on an annual basis every 12 months, is that enough? What are the comparison parameters with regards to battery baseline? At what percent should we look to replace the cell? 2. Is a battery system that only supplies the SCADA RTU considered part of the protective system if alarms for the monitored protective systems utilize that SCADA RTU?
Response: Response: Thank you for your comments. **1. The station battery baseline value is up to the entity to determine. Please see Section 15.4.1 of the Supplementary Reference for a discussion of this.** **2. No. The Applicability of the standard limits the standard to only those devices within the Protection.**		
ISO New England Inc.		1. In general, the standard is overly prescriptive and complex. It should not be necessary for a standard at this level to be as detailed and complex as this standard is. Entities working with manufacturers, and knowledge gained from experience can develop adequate maintenance and testing programs. 2. Why are "Relays that respond to non-electrical inputs or impulses (such as, but not limited to, vibration, pressure, seismic, thermal or gas accumulation)..." not included? The output contacts from these devices are oftentimes connected in tripping or control circuits to isolate problem equipment. 3. Due to the critical nature of the trip coil, it must be maintained more frequently if it is not monitored. Trip coils are also considered in the standard as being part of the control circuitry. Table 1-5 has a row labeled "Unmonitored Control circuitry associated with protective functions", which would include trip coils,

Organization	Yes or No	Question 5 Comment
		has a "Maximum Maintenance Interval" of "12 Calendar Years". Any control circuit could fail at any time, but an unmonitored control circuit could fail, and remain undetected for years with the times specified in the Table (it might only be 6 years if I understand that as being the trip test interval specified in the table). Regardless, if a breaker is unable to trip because of control circuit failure, then the system must be operated in real time assuming that that breaker will not trip for a fault or an event, and backup facilities would be called upon to operate. Thus, for a line fault with a "stuck" breaker (a breaker unable to trip), instead of one line tripping, you might have many more lines deloaded or tripped because of a bus having to be cleared because of a breaker failure initiation. The bulk electric system would have to be operated to handle this contingency. 4. In reference to the FAQ document, Section 5 on Station dc Supply, Question K, clarification is needed with respect to dc supplies for communication within the substation. For example, if the communication systems were run off a separate battery in separate area in a substation, would the standard apply to these batteries or not? 5. To define terms only as they are used in PRC-005-2 is inviting confusion. Although they may be unique to PRC-005-2, some or all of them may be used in future standards, some already may be used in existing standards, and may or may not be deliberately defined. Consistency must be maintained, not only for administrative purposes, but for effective technical communications as well. 6. What is the definition of "Maintenance" as used in the table column "Maximum Maintenance Interval"? Maintenance can range from cleaning a relay cover to a full calibration of a relay. 7. A control circuit is not a component, it is made up of components. 8. Sub-requirement 1.5 needs to be clarified. It is not clear what "Identify calibration tolerances or other equivalent parameters..." means, and may be subject to different interpretations by entities and compliance enforcement personnel. 9. In the Implementation plan for Requirement R1, recommend changing "six" to fifteen. This change would restore the 3-month time difference that existed in the previous draft, between the durations of the implementation periods for jurisdictions that do and do not require regulatory approval. It will ensure equity for those entities located in jurisdictions that do not require regulatory approval, as is the case in Ontario. 10. The 'box' for "Monitored Station dc supply..." in Table 1-4 is not clear. It seems to continue to the next page to a new box. There are multiple activities without clear delineation.
Response: Thank you for your comments. **1. The intervals and activities specified are believed by the SDT to be technically effective, in a fashion that may be consistently monitored for**		

Organization	Yes or No	Question 5 Comment
		compliance. Further, FERC Order 693 directs NERC to establish maximum allowable intervals, which implies that minimum activities also need be prescribed. If an entities' experience is that components require less-frequent maintenance, a performance-based program in accordance with R3 and Attachment A is an option. **2. The SDT concentrated their efforts on protective relays which use the entire group of component types within the Protection System definition. Also, there is currently no technical basis for the maintenance of the devices which respond to non-electrical quantities on which to base mandatory standards related either to activities or intervals. Absent such a technical basis, we are currently unable to establish mandatory requirements, but may do so in the future if such a technical basis becomes available.** **3. According to Table 1-5, trip coils of interrupting devices must be verified to operate every 6 years, rather than the 12-year interval. You are free to maintain these devices more frequently if you desire.** **4. With respect to dc supply associated only with communications systems, we prescribe, within Table 1-2, that the communications system must be verified as functional every 3 months, unless the functionality is verified by monitoring. The specific station dc supply requirements (Table 1-4) do not apply to the dc supply associated only with communications systems. The SDT has decided to eliminate the FAQ and incorporate topics and discussion from the FAQ within the Supplementary Reference Document. Your comments will be considered within that activity.** **5. The SDT has proposed these terms for use only within PRC-005-2 because we are concerned that other uses of these terms, either now or in the future, may not be consistent with the terms as used here. They are defined only for clarify within this standard. The SDT will confirm with NERC staff that this approach is acceptable.** **6. As used in the "Maximum Maintenance Interval" column title of the table, maintenance refers to whatever activities are specified in the Activities column. The term is capitalized in the column title in conformance with normal editorial practice as a title, rather than as a definition** **7. For purposes of this standard, the control circuit IS defined as one component type.** **8. The SDT has determined that the fundamental concerns of Requirement R1, Part 1.5 and the associated changes are addressed within the PSMP definition, and that Requirement R1, Part 1.5 is not necessary; therefore, it has been removed. Requirement R4 has also been re-drafted to address various related concerns noted within comments. The associated VSL has also been revised. Please see Supplementary Reference Document, Section 8 for a discussion of this.** **9. In consideration of your comment, "six" has been modified to "twelve" in the Implementation Plan for Requirement R1, making it consistent with the remainder of the Implementation Plan.** **10. Table 1-4 has been further modified for clarity**
Nebraska Public Power District	Yes	Definitions: 1. The PSMP definition inappropriately extends the maintenance program to include corrective maintenance. The first bullet of the Detailed Description section of the SAR specifically states: "Analysis of correct operations or misoperations may be an integral part of condition-based maintenance processes, but need not be mandated in a maintenance standard." The comment in the SAR was

Organization	Yes or No	Question 5 Comment
		directed toward the Purpose of PRC-017 since it is the only one of the applicable PRC standards that included corrective measures in its Purpose. However, the concept of not including corrective maintenance in a maintenance standard should apply to all of the applicable PRC standards. The same statement from the SAR identified above was also included in the NERC SPCTF Assessment of Standards referenced in the SAR. Neither the SAR nor the NERC SPCTF Assessment of the Standards identified the need to expand the maintenance and testing program to include corrective maintenance. I recommend deleting the words "and proper operation of malfunctioning components is restored." from the first sentence of the PSMP definition. I believe that failure to do so exceeds the scope of the SAR. 2. The definition of a Countable Event should clearly state whether or not multiple conditions on a single component will count as a single Countable Event or as multiple Countable Events. For example, a single relay fails its undervoltage setting and its under frequency setting. Is this one Countable Event or two Countable Events? 3. Applicability Part 4.2.2:The ERO does not establish underfrequency load-shedding requirements. Those requirements will be established by Reliability Standard PRC-006-1 when it is approved by FERC. I recommend changing Accountability Part 4.2.2. to "...installed to provide last resort system preservation measures." (Note this wording is consistent with the Purpose of PRC-006-0.)Applicability Part 4.2.5.4 and 4.2.5.5: 4. Station Service transformers provide energy to plant loads and not the BES. If these plant transformers are included, why not include the rest of the plant systems? I recommend deleting Applicability Part 4.2.5.4 and 4.2.5.5. 5. Requirement R1 Part 1.2: The wording of the first sentence is unclear about what information is required. For example, I could state in my PSMP that: "All Protection System component types are addressed through time-based, performance-based, or a combination of these maintenance methods" and be compliant with the Requirement. I recommend re-wording the first sentence to state: "Identify which maintenance method is used to address each Protection System component type. Options include time-based, performance-based (per PRC-005 Attachment A), or a combination of time-based and performance-based (per PRC-005 Attachment A)." Note that PRC-005 Attachment A does not address a combination of maintenance methods and therefore the second reference in the first sentence should be removed if the original wording is retained. 6. Requirement R1 Part 1.4: The column titles in Tables 1-1 through 1-5 have been revised to “Component Attributes” and “Activities”. I recommend changing "monitoring attributes" to "component attributes" and "maintenance activities" to "activities" to be consistent with the Tables. 7. Requirement R1 Part 1.5: Maintenance acceptance criteria for a given Protection System component type may very depending on the manufacturer, model, etc.. Including all acceptance criteria in the PSMP

Organization	Yes or No	Question 5 Comment
		document will over-complicate the program document. I recommend clarifying Part 1.5 to allow the incorporation of device-specific acceptance criteria in the applicable evidentiary documentation. One possible option is to add a second sentence as follows: "The calibration tolerances or other equivalent parameters may be included with the maintenance records." Note that a personal preference would be to use the phrase “acceptance criteria” instead of “calibration tolerances or other equivalent parameters”. 8. Requirement R4:The PSMP definition inappropriately extends the maintenance program to include corrective maintenance. The first bullet of the Detailed Description section of the SAR specifically states: "Analysis of correct operations or misoperations may be an integral part of condition-based maintenance processes, but need not be mandated in a maintenance standard." The comment in the SAR was directed toward the Purpose of PRC-017 since it is the only one of the applicable PRC standards that included corrective measures in its Purpose. However, the concept of not including corrective maintenance in a maintenance standard should apply to all of the applicable PRC standards. The same statement from the SAR identified above was also included in the NERC SPCTF Assessment of Standards referenced in the SAR. Neither the SAR nor the NERC SPCTF Assessment of the Standards identified the need to expand the maintenance and testing program to include corrective maintenance. I recommend deleting the words "including identification of the resolution of all maintenance correctable issues" from the first sentence of the Requirement. I believe that failure to do so exceeds the scope of the SAR. 9. Requirement R4 Part 4.2: What is considered sufficient verification of parameters? Does this require an engineer or technician signature or simply an indication of pass/fail? The PSMP definition inappropriately extends the maintenance program to include corrective maintenance. The first bullet of the Detailed Description section of the SAR specifically states: "Analysis of correct operations or misoperations may be an integral part of condition-based maintenance processes, but need not be mandated in a maintenance standard." The comment in the SAR was directed toward the Purpose of PRC-017 since it is the only one of the applicable PRC standards that included corrective measures in its Purpose. However, the concept of not including corrective maintenance in a maintenance standard should apply to all of the applicable PRC standards. The same statement from the SAR identified above was also included in the NERC SPCTF Assessment of Standards referenced in the SAR. Neither the SAR nor the NERC SPCTF Assessment of the Standards identified the need to expand the maintenance and testing program to include corrective maintenance. I recommend re-wording Requirement 4, Part 4.2 to state: "Verify that the components are within the acceptable parameters established in accordance with Requirement R1, Part 1.5 at the conclusion of the maintenance activities." I believe that failure to do so exceeds the scope of the SAR. 10. Measurement M2: Can a single specification document suffice for similar relay types such as one document for SEL relays? For trip circuit monitoring can a standard document be used for a group of

Organization	Yes or No	Question 5 Comment
		similar schemes ? 11. Measurement M4:I assume this is not an all inclusive list of potential forms of evidence. Please clarify what is meant by "such as". Does this mean that: 1) Any one item is sufficient?; 2) Certain combinations of evidence are necessary? If so, what combinations?; 3) Are other items that are not identified here acceptable? 12. Measurement M4 repeatedly refers to "dated" evidence. However, current audit expectations include either performer signatures or initials on the evidence in addition to the dates. Please revise Measurement M4 to clearly state the expectations regarding performer signatures or initials on the evidence documents. 13. The PSMP definition inappropriately extends the maintenance program to include corrective maintenance. The first bullet of the Detailed Description section of the SAR specifically states: "Analysis of correct operations or misoperations may be an integral part of condition-based maintenance processes, but need not be mandated in a maintenance standard." The comment in the SAR was directed toward the Purpose of PRC-017 since it is the only one of the applicable PRC standards that included corrective measures in its Purpose. However, the concept of not including corrective maintenance in a maintenance standard should apply to all of the applicable PRC standards. The same statement from the SAR identified above was also included in the NERC SPCTF Assessment of Standards referenced in the SAR. Neither the SAR nor the NERC SPCTF Assessment of the Standards identified the need to expand the maintenance and testing program to include corrective maintenance. I recommend deleting the words: "and initiated resolution of identified maintenance correctable issues" from the last sentence of Measurement M4. I believe that failure to do so exceeds the scope of the SAR 14. .Compliance Part 1.3: Tables 1-1 through 1-5 refers to time-based maintenance programs. I recommend changing "performance-based" to "time-based" in the last sentence of the third paragraph. 15. The last paragraph of Part 1.3 of the Compliance Section states: "The Compliance Enforcement Authority shall keep the last periodic audit report and all requested and submitted subsequent compliance records." This appears to be a requirement of the Compliance Enforcement Authority however they are not identified in Section 4 Applicability of the Standard. It is also in conflict with the SAR Attachment B - Reliability Standard Review Guidelines which states on page SAR-10: "Do not write any requirements for the Regional Reliability Organization. Any requirements currently assigned to the RRO should be re-assigned to the applicable functional entity." I recommend deleting the last paragraph of Part 1.3 of the Compliance Section to avoid conflict with the SAR. 16. Table 1-1: The Activity of row 1 states: “Verify operation of the relay inputs and outputs that are essential to ...” Please clarify what is meant by “operation of” the relay inputs and outputs. What is the criteria to determine if something is “essential”? The first line of row 2 has a double colon. Please delete one of

Organization	Yes or No	Question 5 Comment
		them. 17. For the second bullet of row 2 column 1, please clarify what is meant by the last part of this sentence "that are also performing self monitoring and alarming" and how it relates to the voltage and current sampling required. It appears the self monitoring is required in the first bullet. 18. For the first bullet of row 2 column 3, many relay settings may not be essential to the protective function of the relay. I recommend revising the first bullet to: “Settings that are essential to the proper function of the protection system are as specified.” 19. The format of the Activities column for all three rows is different. Please reformat them to be consistent. My preference is the second row. 20. Table 1-2: Row 1 Column 2, verifying the functionality of communications systems on a 3 calendar months basis is excessive and unnecessary. Suggest changing the Maximum Maintenance Interval to either 6 calendar months or semi-annual. 21. Row 2 Column 1, please provide examples of typical communications systems that fit into this category, e.g. Mirror Bit or Guard systems? 22. The words “such as” are used repeatedly. Please clarify what is meant by "such as". Is this left up to the Utility to define in their PSMP? 23. Table 1-5: The Activity for row 1 requires verification that each trip coil is able to operate the device. If a control circuitry contains multiple trip coils, it is not always possible to determine which trip coil energized to trip the device. I recommend changing "each trip coil" to "at least one trip coil". 24. Please clarify what is meant by an "Electromechanical trip" device in row 3. 25. Row 3 column 3, does this mean verify the trip contact on the device operates properly but not verify the trip circuit wiring from this contact to the trip coil since the trip circuit is tested in the row below? It is difficult to separate the meaning in these two rows. 26. Row 4 column 3 requires verification of all paths of the control and trip circuits. Please clarify if this includes the control circuitry of Protection Systems located at the other end of a line if the device utilizes a remote trip scheme?

Response: Response: Thank you for your comments.

1. **Corrective maintenance is included within PRC-005-2 only in that the initiation of resolution of maintenance-correctable issues (discovered during maintenance activities) is included. The SDT considers this inclusion to be appropriate and necessary as part of the maintenance program.**

Organization	Yes or No	Question 5 Comment
2. The example cited would be one countable event. The definition has been modified to clarify. 3. Underfrequency load shedding requirements, whether established by Regional Entities (current practice) or by NERC, are ERO requirements. 4. Clause 4.2.5.5 has been removed. Generator-connected station service transformers are essential to the continuing operation of the generating plant; therefore, protection on these system components is included within PRC-005-2 if the generation plant is a BES facility. 5. Requirement R1, Part 1.2 has been modified essentially as you suggest. 6. "Monitoring attributes" are used within the respective tables; "Component attributes" can include monitoring or not. The Tables have been revised to specify "Maintenance Activities". 7. The SDT has determined that the fundamental concerns of Requirement R1, Part 1.5 and the associated changes are addressed within the PSMP definition, and that Requirement R1, Part 1.5 is not necessary; therefore, it has been removed. Requirement R4 has also been re-drafted to address various related concerns noted within comments. The associated VSL has also been revised. Please see Supplementary Reference Document, Section 8 for a discussion of this. 8. Corrective maintenance is included within PRC-005-2 only in that the initiation of resolution of maintenance-correctable issues (discovered during maintenance activities) is included. The SDT considers this inclusion to be appropriate and necessary as part of the maintenance program. 9. The SDT has determined that the fundamental concerns of Requirement R1, Part 1.5 and the associated changes are addressed within the PSMP definition, and that Requirement R1, Part 1.5 is not necessary; therefore, it has been removed. Requirement R4 has also been re-drafted to address various related concerns noted within comments. The associated VSL has also been revised. Please see Supplementary Reference Document, Section 8 for a discussion of this. 10. Yes. However, the degree to which any single evidence type is sufficient is dependent on the completeness of the evidence itself. The Measure has been modified to clarify this point. The Measure M2 to which you refer has been deleted in conjunction with the deletion of the accompanying requirement. 11. Yes. The SDT has provided examples of the sort of evidence that may serve to demonstrate compliance. The degree to which any single evidence type is sufficient is dependent on the completeness of the evidence itself. "Such as" was not intended to be an all-inclusive list; additional examples are provided in Section 15.7 of the Supplementary Reference Document. The Measure has been modified to clarify this point. 12. Signatures, initials, etc, may not apply to all forms of evidence. "Dated" is more universal. 13. Corrective maintenance is included within PRC-005-2 only in that the initiation of resolution of maintenance-correctable issues (discovered during maintenance activities) is included. The SDT considers this inclusion to be appropriate and necessary as part of the maintenance program. 14. The portion of "Compliance" that referred to the Tables has been deleted. 15. The text to which you refer is part of the standard language for NERC Standards and reflects a general responsibility of the Compliance Enforcement Authority. The Compliance Enforcement Authority does not need to be indentified as an Applicable Entity. 16. If proper operation of an input or output is required such that the Protection System operate properly, it is "essential". "Verify operation …" means		

Organization	Yes or No	Question 5 Comment
		to determine that the component functions properly. The typo has been corrected. **17. The text to which you refer has been deleted in consideration of your comment.** **18. The SDT disagrees; settings beyond those "essential for proper function of the relay" may be essential to proper functioning of the monitoring, etc, which is used to extend the maximum maintenance interval of the relay.** **19. The SDT has arranged the format of each of the cells within the Maintenance Activities column for the best clarity within each individual cell.** **20. The SDT believes that the 3-month interval is proper for unmonitored communications systems.** **21. Examples such as you suggest may violate the NERC Anti-Trust Guidelines by appearing to favor specific proprietary technologies. Some examples may be found in Section 15.5 of the Supplementary Reference Document.** **22. "Such as" refers to examples pertinent to various equipment technologies, and thus are equipment-dependent, as opposed to entity-selectable. Some examples may be found in Section 15.5 of the Supplementary Reference Document.** **23. The SDT believes that each individual trip coil needs to be verified as required within PRC-005-2.** **24. "Electromechanical" refers to any device which has moving parts that respond to electrical signals, such as lockout relays and auxiliary relays. This row in Table 1-5 has been modified.** **25. Yes. The verification of the entire control circuitry is performed according to the following row in the Table, on a less-frequent interval.** **26. The testing of the "remote trip scheme" seems best characterized as testing of a "Communications System". Accordingly, testing of the remote station control circuitry is an independent activity.**
CenterPoint Energy	Yes	(a) CenterPoint Energy cannot support this proposed Standard. Any standard that requires a 35 page Supplementary Reference document and a 37 page FAQ - Practical Compliance and Implementation document, in addition to extensive tables in the Standard, is much too prescriptive and complex to be practically implemented. (b) CenterPoint Energy is opposed to approving a standard that imposes unnecessary burden and reliability risk by imposing an overly prescriptive approach that in many cases would "fix" non-existent problems. To clarify this last point, CenterPoint Energy is not asserting that maintenance problems do not exist. However, requiring all entities to modify their practices to conform to the inflexible approach embodied in this proposal, regardless of how existing practices are working, is not an appropriate solution. Among other things, requiring entities to modify practices that are working well to conform to the rigid requirements proposed herein carries the downside risk that the revised practices, made solely to comply with the rigid requirements, degrade reliability performance. (c) CenterPoint Energy is very concerned that a large increase in the amount of documentation will be required in order to demonstrate compliance - with no resulting reliability benefit. CenterPoint Energy

Organization	Yes or No	Question 5 Comment
		believes this Standard could actually result in decreasing system reliability, as the Standard proposes excessive maintenance requirements. The following is included in the Supplementary Reference document (page 8): "Excessive maintenance can actually decrease the reliability of the component or system. It is not unusual to cause failure of a component by removing it from service and restoring it." System reliability can be even further reduced by the number of transmission line and autotransformer outages required to perform maintenance. (d) The following is included in the FAQ - Practical Compliance and Implementation document: "PRC-005-2 assumes that thorough commission testing was performed prior to a protection system being placed in service. PRC-005-2 requires performance of maintenance activities that are deemed necessary to detect and correct plausible age and service related degradation of components such that a properly built and commission tested Protection System will continue to function as designed over its service life." CenterPoint Energy believes some proposed requirements, such as wire checking a relay panel, do not conform to this statement. CenterPoint Energy's experience has been that panel wiring does not degrade with age and service and that problems with panel wiring, after thorough commissioning, is not a systemic issue.
Response: Response: Thank you for your comments. **a. The SDT has decided to eliminate the FAQ and incorporate topics and discussion from the FAQ within the Supplementary Reference Document.** **b. FERC Order 633 directed that NERC establish maximum maintenance intervals. Additionally, the SDT is directed to develop a measurable, effective continent-wide standard. Entities may continue their current practices as long as those practices meet the minimum requirements of this standard.** **c. FERC Order 633 directed that NERC establish maximum maintenance intervals. The documentation required should not expand dramatically from the documentation currently required to demonstrate compliance. An entity may minimize hands-on maintenance by utilizing monitoring to extend the intervals.** **d. The standard does not require "wire-checking", but instead generically specifies "verification" – however an entity chooses to do so.**		
American Transmission Company	Yes	ATC recognizes the substantial efforts that the SDT has made on PRC-005 and appreciate the SDT's modifications to this Standard based on previous comments made. ATC looks forward to continuing to have a positive influence on this process via the comment process, ballots and interaction with the SDT. ATC was very close to an affirmative vote on this Standard prior to the unanticipated changes that appeared in this most recent posting. These changes introduce a significant negative impact from ATC's perspective. Therefore, ATC is recommending a negative ballot in the hope that our concerns regarding R 1.5 and R 4.2 and other clarifications will be included with the standard The two items within the proposed Standard that we take exception to are not directly related to implementing FERC Order 693. Rather, it is the overly

Organization	Yes or No	Question 5 Comment
		prescriptive nature with respect to the "how" as outlined in the proposed Standard that ATC takes exception... To improve and find the proposed Standard acceptable, ATC would like to see the following modifications: 1. Change the text to require the actuation of a single trip coil (row 1 of table 1.5). This would satisfy the intent to exercise the mechanism on a regular schedule, given that the mechanism binding is a much more likely source of a coil failure. The balance of trip coils could then be tested as part of routine breaker maintenance. 2. Eliminate the additional requirements introduced by the addition of R1.5 and the associated modifications to R4.2. The additional documentation required for the range of each element is typically incorporated into the pass/fail mechanism of the existing test equipment (which is reflective of the manufacturer recommendations) used to conduct these tests. Therefore, requiring the assembly of this additional documentation from each entity would: a. Be duplicative and voluminous as it would require us to track thousands of additional data points due to the variability in element ranges by relay manufacturer, model number and vintage. b. Not add to the reliability of the system as this function is already being performed on a collective basis.
Response: Response: Thank you for your comments. **1. The SDT believes that each individual trip coil needs to be verified as required within PRC-005-2.** **2. The SDT has determined that the fundamental concerns of Requirement R1, Part 1.5 and the associated changes are addressed within the PSMP definition, and that Requirement R1, Part 1.5 is not necessary; therefore, it has been removed. Requirement R4 has also been re-drafted to address various related concerns noted within comments. The associated VSL has also been revised. Please see Supplementary Reference Document, Section 8 for a discussion of this.**		
Consumers Energy	Yes	1. Table 1-3 states, "are received by the protective relays". Does this require that the inputs to each individual relay must be checked, or is it sufficient to verify that acceptable signals are received at the relay panel, etc? 2. Relative to Table 1-5, the activities will likely require that system components be removed from service to complete those activities. If the changes to the BES definition (per the FERC Order) causes system elements such as 138 kV connected distribution transformers to be considered as BES, these components can not be removed from service for maintenance without outaging customers. The standard must exempt these components from the activities of Table 1-5 if the activity would result in deenergizing customers. 3. For the component types addressed in Tables 1-3 and 1-5, the requirements may cause entities to identify components very differently than they are currently doing, and doing so may take several years to complete.

Organization	Yes or No	Question 5 Comment
		The Implementation Plan for R1 and R4 is too aggressive in that it may not permit entities to complete the identification of discrete components and the associated maintenance and implement their program as currently proposed. We propose that the Implementation Plan specifically address the components in Table 1-3 and 1-5 with a minimum of 3 calendar years for R1 and 12 calendar years after that for R4. 4. As for the interval in Table 1-4 regarding the battery terminal connection resistance, we believe that an 18-month interval is excessively frequent for this activity, and suggest that it be moved to the 6-calendar-year interval. 5. In Table 1-4, we currently re-torque all of the battery terminal connections every 4-years, rather than measuring the terminal connection resistance to determine if the connections are sound. Disregarding the interval, would this activity satisfy the "verify the battery terminal connection resistance" activity?
Response: Response: Thank you for your comments. **1. The SDT intends that the voltage and current signals properly reach each individual relay, but there may be several methods of accomplishing this activity.** **2. This concern seems more properly to be one to be addressed during the activities to develop the new BES definition, rather than within PRC-005-2.** **3. The Implementation Plan for Requirement R1 has been modified from 6 months to 12 months. The Standard has also been modified (Requirement R1, Part 1.1) to not specifically require identification of all individual Protection System components. The Implementation Plan for Requirement R4 has been revised to add one year to all established dates.** **4. IEEE 450, 1188, 1106 all recommend this activity at a 12-month interval. Please see Section 15.4.1 of the Supplementary Reference Document for a discussion of this activity.** **5. Re-torqueing the battery terminals would not meet this requirement.**		
Southern Company Generation	Yes	1. Please consider retaining the definitions stated to be moved to the NERC Glossary - they would be valuable to entities in the standard. 2. On Page 5, Section 1.2, please consider changing "or a combination of these maintenance methods (per PRC-005-Attachment A)." to "or a combination of these two maintenance methods." 3. On Page 5, Section 1.5: recommend deleting this section - the subjectivity of what is an acceptable value for component testing makes this requirement un-valuable. 4. On Page 5, Section 4.2, it is recommended that the requirement be the following: Either verify that the component performance is acceptable at the conclusion of the maintenance activities or initiate resolution of any identified maintenance correctable issue.

Organization	Yes or No	Question 5 Comment
		5. On Page 5, Measure M1, replace 1.5 with 1.4 (after eliminating Requirement 1.5) 6. On Page 6, Section 1.3, replace the existing Data Retention text with the following: The TO, GO, and DP shall each retain documentation for the longer of the these time periods: 1) the two most recent performances of each distinct maintenance activity for the Protection System component, or (2) all performances of each distinct maintenance activity for the Protection System component since the previous scheduled audit date. The Compliance Enforcement Authority shall keep the last periodic audit report and all requested and submitted subsequent compliance records. 7. On Page 10, Section F, please correct the revision information for the documents listed. 8. On Pages 14 & 15, Table 1-4, move the bottom row to the next page so that it is easier to see that the maintenance activities are an “either/or” option. 9. On Page 17, Table 1-5, it seems that the 12 calendar year interval activities would automatically be included in the 6 calendar year activity for verifying the electrical operation of electromechanical trip and auxiliary devices. Is the 12 year requirement superfluous? 10. On Page 19, Attachment A, it is recommended to delete the footnote #1 since the definition is given already on Page 2.

Response: Response: Thank you for your comments.

1. **If the terms were placed in the Glossary of Terms, the SDT is concerned that some future SDT, in order to utilize these terms, may change them in a fashion inconsistent with the intended usage within PRC-005-2.**
2. **Requirement R1, Part 1.2 has been modified.**
3. **The SDT has determined that the fundamental concerns of Requirement R1, Part 1.5 and the associated changes are addressed within the PSMP definition, and that Requirement R1, Part 1.5 is not necessary; therefore, it has been removed. Requirement R4 has also been re-drafted to address various related concerns noted within comments. The associated VSL has also been revised. Please see Supplementary Reference Document, Section 8 for a discussion of this.**
4. **The SDT has determined that the fundamental concerns of Requirement R1, Part 1.5 and the associated changes are addressed within the PSMP definition, and that Requirement R1, Part 1.5 is not necessary; therefore, it has been removed. Requirement R4 has also been re-drafted to address various related concerns noted within comments. The associated VSL has also been revised. Please see Supplementary Reference Document, Section 8 for a discussion of this.**
5. **Measure M1 has been modified as you suggest.**
6. **The Data Retention section has been modified essentially as you suggest.**

Organization	Yes or No	Question 5 Comment
7. The Reference information has been corrected. **8. Table 1-4 has been revised.** **9. The 12-year interval activities are more extensive than the 6-year interval activities.** **10. Footnote #1 has been removed.**		
US Bureau of Reclamation	Yes	1. The concept of including definitions in this standard that are not a part of the Glossary of Terms will create a conflict with other standards that choose to use the term with a different meaning. This practice should be disallowed. If a definition is be introduced it should be added to the Glossary of Terms. This concept was not provided to industry for comment when the modifications to the Definition of Protection System were introduced. Additional related to this practice are included later on. 2. The Term "Protective Relays" is overly broad as it is not limited to those devices which are used to protect the BES. In the reference provided to the standard, the SDT defined "Protective Relays" as "These relays are defined as the devices that receive the input signal from the current and voltage sensing devices and are used to isolate a faulted portion of the BES. " The Definition for "Protective Relays" as well as the components associated with the them should be associated with the protection of the BES in the definition. 3. The Section 2.4 of the attached reference and the recent FERC NOPR are in conflict with the definition of "Protective Relays" which include lockout relays and transfer trip relays "The relays to which this standard applies are those relays that use measurements of voltage, current, frequency and/or phase angle and provide a trip output to trip coils, dc control circuitry or associated communications equipment. 4. This Draft 2: April3: November 17, 2010 Page 5 definition extends to IEEE device # 86 (lockout relay) and IEEE device # 94 (tripping or trip-free relay) as these devices are tripping relays that respond to the trip signal of the protective relay that processed the signals from the current and voltage sensing devices." The definition should be revised to reflect that is really intended. The SDT as created an implied definition by specifically defining DC circuits associated with the trip function of a "Protective Relay" but failing to specifically define voltage and current sensing circuits providing inputs to "Protective Relays". The team clearly intended the circuits to be included but the definition does not since it only refers the "voltage and current sensing devices". 5. Starting with the Definitions and continuing through the end of the document, terms that have been defined are not capitalized. This leaves it ambiguous as to whether the defined term is to be applied or it is a generic reference. Only defined terms "Protection System Maintenance Program" and "Protection System" are consistently capitalized. 6. Protection System Maintenance Program (PSMP) definition: The Restore bullet should be revised to read

Organization	Yes or No	Question 5 Comment
		as follows: "Return malfunctioning components to proper operation by repair or calibration during performance of the initial on-site activity."Add the following at the end of the PSMP definition: "NOTE: Repair or replacement of malfunctioning Components that require follow-up action fall outside of the PSMP, and are considered Maintenance Correctable Issues." 7. Protection System (modification) definition: The term "protective functions" that is used herein should be changed to "protective relay functions" or what is meant by the phrase should become a defined term, as it is being used as if it is a well known well defined, and agreed upon term. The first bullet text should be revised to read as follows: "Protective relays that monitor BES electrical quantities and respond when those quantities exceed established parameters," the last two bullets should be reversed in order and modified to read as follows: o control circuitry associated with protective relay functions through the trip coil(s) of the circuit breakers or other interrupting devices, and o station dc supply (including station batteries, battery chargers, and non-battery-based dc supply) associated with the preceding four bullets. 8. Statement between the Protection System (modification) definition and the Maintenance Correctable Issue definition; Is this a NERC accepted practice? There does not appear to be a location in the standard for defining terms. Having terms that are not contained in the "Glossary of Terms used in NERC Reliability Standards," and are outside of the terms of the standards, and yet are necessary to understand the terms of the Requirements is not acceptable. They would become similar to the reference documents, and could be changed without notice. 9. Maintenance Correctable Issue definition: The last sentence should be modified to read as follows: "Therefore this issue requires follow-up corrective action which is outside the scope of the Protection System Maintenance Program and the Standard PRC-005-2 defined Maximum Maintenance Intervals." The definition could also be easily clarified to read "Maintenance Correctable Issue - Failure of a component to operate within design parameters such that it cannot be restored to functional order by repair or calibration; therefore requires replacement." This ensures that any action to restore the equipment, short of replacement, is still considered maintenance. Otherwise ambiguity is introduced as what "maintenance" is. 10. Countable Event definition: An explanation should be made that this is a part of the technical justification for the ongoing use of a performance-based Protection System Maintenance Program for PRC-005. 11. Insert the phrase "Standard PRC-005-2" before the term "Tables 1-1..." 12. Applicability: 4.2. Facilities: 4.2.5.4 and 4.2.5.5: Delete these two parts of the applicability. Station service transformer protection systems are not designed to provide protection for the BES. Per PRC-005-2 Protection System Maintenance Draft Supplementary Reference, Nov. 17 2010, Section 2.3 - Applicability of New Protection System Maintenance Standards: "The BES purpose is to transfer bulk power. The applicability language has been changed from the original PRC-005: "...affecting the reliability of the Bulk

Organization	Yes or No	Question 5 Comment
		Electric System (BES)..."To the present language:"... and that are applied on, or are designed to provide protection for the BES."The drafting team intends that this Standard will not apply to "merely possible" parallel paths, (sub-transmission and distribution circuits), but rather the standard applies to any Protection System that is designed to detect a fault on the BES and take action in response to that fault."Station Service transformer protection is designed to detect a fault on equipment internal to a power plant and not directly related to the BES. In addition, many Station Service protection ensures fail over to a second source in case of a problem. Thus station service transformer protection system is a power plant reliability issue and not a BES reliability issue. As such station service transformer protection should not be included in PRC 005 2.In addition; the SDT appears to have targeted generation station service without regard to transmission systems. If generating station service transformers are that important, then why are substation/switchyard station service transformers not also important? 13. B. Requirements Should the sub requirements have the "R" prefix? 14. R4.Change the phrase "... PSMP, including identification of the resolution of all ..." to read "...PSMP including identification, but not the resolution, of all ...". 15. General comment PRC005-2 is very specific in listing the maximum maintenance interval but is still very vague in listing the specific components to test. Suggest adding the following to the standard. a. A sample list of devices or systems that must be verified in a generator to meet the requirements of this Maintenance Standard: b. Examples of typical devices and relay systems that respond to electrical quantities and may directly trip the generator, or trip through a lockout relay may include but are not necessarily limited to: Fault protective functions, including distance functions, voltage-restrained overcurrent functions, or voltage-controlled overcurrent functions Loss-of-field relays Volts-per-hertz relays Negative sequence overcurrent relays Over voltage and under voltage protection relays Stator-ground relays Communications-based protection systems such as transfer-trip systems Generator differential relays

Organization	Yes or No	Question 5 Comment
		Reverse power relays Frequency relays Out-of-step relays Inadvertent energization protection Breaker failure protection o lockout or tripping relays c. For generator step up transformers, operation of any the following associated protective relays frequently would result in a trip of the generating unit and, as such, would be included in the program: Transformer differential relays o Neutral overcurrent relay Phase overcurrent relays 16. In the Lower, Moderate and Severe VSL descriptions, in addition to not being capitalized, the defined term Maintenance Correctable Issues should not be hyphenated. 17. In Attachment A Section 2 Page 51 should be modified as follows: 2. Maintain the components in each segment according to the time-based maximum allowable intervals established in Tables 1-1 through 1-5 until results of maintenance activities for the segment are available for a minimum of either 30 individual components of the segment or a significant statistical population of the individual components of a segment." Without the modification the requirement unfairly target smaller entities. This will allow smaller entities to determine adjust its time based intervals if its experience with an appropriate number of components supports it. In Attachment A Section 5 Page 51 should be modified as follows: 5. Determine the maximum allowable maintenance interval for each segment such that the segment experiences countable events on no more than 4% of the components within the segment, for the greater of either the last 30 components maintained or a significant statistical population of the individual components of a segment maintained in the previous year. Without the modification the requirement unfairly target smaller entities. This will allow smaller entities to determine adjust its time based intervals if its experience with an appropriate number components supports it. 18. In Attachment A Section 5 Page 52 should be modified as follows: 5. Using the prior year's data, determine the maximum allowable maintenance interval for each segment such that the segment experiences countable events on no more than 4% of the components within the segment, for the greater of either the last 30 components maintained or a significant statistical population

Organization	Yes or No	Question 5 Comment
		of the individual components of a segment components maintained in the previous year. Without the modification the requirement unfairly target smaller entities. This will allow smaller entities to determine adjust its time based intervals if its experience with an appropriate number of components supports it.

Response: Thank you for your comments.

1. **If the terms were placed in the Glossary of Terms, the SDT is concerned that some future SDT, in order to utilize these terms, may change them in a fashion inconsistent with the intended usage within PRC-005-2.**
2. **"Protective relay" is defined by IEEE, and the SDT sees no need to either change the definition or to repeat the definition within PRC-005. Further, the applicability of generically-described protective relays is defined by the Applicability clause of PRC-005-2.**
3. **The issues raised by the FERC NOPR will be addressed as part of the response to the NOPR (and ultimately the Order). The extension to auxiliary and lockout relays is not part of the protective relay (addressed within Table 1-1), but instead as part of the control circuitry (Table 1-5).**
4. **The extension to auxiliary and lockout relays is not part of the protective relay (addressed within Table 1-1), but instead as part of the control circuitry (Table 1-5).**
5. **Definitions from the NERC Glossary of Terms (or those intended for the Glossary) are consistently capitalized (Protection System and Protection System Maintenance Program fall within this category). As for terms defined only for use within this standard, these terms are NOT capitalized, since they are not in the Glossary of Terms.**
6. **The "restore" portion of PSMP specifically addresses returning malfunctioning components to proper operation. The requirements regarding maintenance correctable issues are further addressed within that definition (for use only within PRC-005-2).**
7. **The SDT is currently not planning on further modifying the most recent NERC BOT-approved definition of Protection System.**
8. **If the terms were placed in the Glossary of Terms, the SDT is concerned that some future SDT, in order to utilize these terms, may change them in a fashion inconsistent with the intended usage within PRC-005-2.**
9. **Identifying problems, but not fixing them, does not constitute an effective program. In deference to the time that may be necessary to repair/replace defective components, the SDT has decided to require only initiation of resolution of maintenance correctable issues, not to demonstrate completion of them.**
10. **Since this term is used only in Attachment A, it seems unnecessary to provide the explanation requested.**
11. **The SDT has elected not to change the reference to the Tables throughout the standard.**
12. **Applicability 4.2.5.5 has been removed. Generator-connected station service transformers (4.2.5.4) are essential to the continuing operation of the generating plant; therefore, protection on these system components is included within PRC-005-2 if the generation plant is a BES facility.**
13. **The current style guide for NERC Standards does not preface the subparts with an "R".**
14. **Identifying problems, but not fixing them, does not constitute an effective program. In deference to the time that may be necessary to**

Organization	Yes or No	Question 5 Comment
		repair/replace defective components, the SDT has decided to require only initiation of resolution of maintenance correctable issues, not to demonstrate completion of them. **15. The various specific components you suggest are addressed within the Facilities portion of the Applicability 4.2.5, as well as other components that satisfy the attributes within 4.2.5. These examples are in the Supplementary Reference Document (Section 8.1.3).** **16. Within the VSLs, the hyphenated term has been corrected.** **17. The SDT has determined that 30 individual components is the minimum acceptable statistically-significant population for use to establish performance-based intervals. Multiple entities may aggregate component populations to establish this component population, provided that the programs are sufficiently similar to make the aggregation valid. See Supplementary Reference Document Section 9 for a discussion.** **18. The SDT has determined that 30 individual components is the minimum acceptable statistically-significant population for use to establish performance-based intervals. Multiple entities may aggregate component populations to establish this component population, provided that the programs are sufficiently similar to make the aggregation valid. See Supplementary Reference Document Section 9 for a discussion.**
Alliant Energy	Yes	1. In the Purpose statement delete “affecting” and replace it with “protecting”. The purpose of the standard deals with systems that protect the BES. 2. In sections R1 and R4.2.1 delete “applied on” as unneeded and potentially confusing. The goal is to cover Protection Systems designed to protect the BES. 3. Alliant Energy believes that Article 1.4 needs to be deleted from the standard. It is redundant and serves no purpose. 4. Alliant Energy believes that Article 1.5 needs to be deleted from the standard. There is a major concern on what an “acceptable parameter” is and how it would be interpreted by the Regional Entities. 5. Section 4.2 Applicable Facilities: We are concerned with this paragraph being interpreted differently by the various regions and thereby causing a large increase in scope for Distribution Provider protection systems beyond the reach of UFLS or UVLS.4.2.1 Protection Systems applied on, or designed to provide protection for, the BES. The description is vague and open for different interpretations for what is “applied on” or “designed to provide protection”. According to the November 17, 2010 Draft Supplementary Reference page 4, the Standard will not apply to sub-transmission and distribution circuits, but will apply to any Protection System that is designed to detect a fault on the BES and take action in response to the fault. The Standard Drafting Team does not feel that Protection Systems designed to protect distribution substation equipment are included in the scope of this standard; however, this will be impacted by the Regional Entity interpretations of ‘protecting” the BES. Most distribution protection systems will not react to a fault on the BES, but are caught up in the interpretation due to tripping a breaker(s) on the BES. We request clarification that the examples listed below do not constitute components of a BES Protection

Organization	Yes or No	Question 5 Comment
		System: 1. Older distribution substations that lack a transformer high side interrupting device and therefore trip a transmission breaker or a portion of the transmission system or bus, or 2. Newer distribution substations that contain a transformer high side interrupting device but also incorporate breaker failure protection that will trip a transmission breaker or a portion of the transmission system or bus. 6. Since distribution provider systems are typically radial and do not contain the level of redundancy of transmission or generation protection systems, it is not cheap, safe, maintaining BES reliability, or easy to coordinate companies to test these protection systems to the level of PRC-005-2 draft recommendations. 7. Section F Supplementary Reference Documents: The references listed in this section refer to 2009 dates and do not match with the 2010 reference documents supplied for comment. 8. Table 1-4 Component Type Station dc Supply: a. "Any dc supply for a UFLS or UVLS system" - This should not have the same testing interval as control circuits, but should have a maximum maintenance period as other dc supplies do. b. Replace the words "perform as designed" on page 14 of Table 1-4 with "operate within defined tolerances."Table 1-5 Component Type Control Circuitry: c. This table allows for unmonitored trip coils for UFLS or UVLS breakers to have "no periodic maintenance". The PRC-005-2 Supplementary Frequently Asked Question #7B and #7C give excellent reasoning for not requiring maintenance on the trip coil component due to the larger number of failures that would be required to have any substantial impact to the BES as well as the statement that distribution breakers are operated often on just fault clearing duty already. We believe that the unmonitored control circuitry has the same level of minimal BES impact and is also being tested each time the distribution breaker undergoes fault clearing duty. With this logic, we do not see why there would be different maintenance requirements for these two components. d. Alliant Energy is concerned that the addition of mandatory 86 and 94 auxiliary lockout relays (Electromechanical trip or Auxiliary devices) will force entire bus outages that will compromise the BES reliability more by forcing utilities across the US to unnecessarily take multiple non-faulted BES elements out of service. Such testing is also likely to introduce human error that will cause outages such as items outlined in the NERC lessons learned" and therefore such testing will result in more outages than actual failures. An equivalent non-destructive test needs to be identified to allow entities to sufficiently trace and test trip paths without taking multiple substation line outages to physically test a lockout or breaker failure scheme.

Organization	Yes or No	Question 5 Comment
Response: Thank you for your comments. **1. The "Purpose" is defined by the SAR.** **2. Requirement R1 and Requirement R4, Part 4.2.1 have been modified as you suggested.** **3. The SDT instead elected to remove Requirement R2.** **4. The SDT has determined that the fundamental concerns of Requirement R1, Part 1.5 and the associated changes are addressed within the PSMP definition, and that Requirement R1, Part 1.5 is not necessary; therefore, it has been removed. Requirement R4 has also been re-drafted to address various related concerns noted within comments. The associated VSL has also been revised. Please see Supplementary Reference Document, Section 8 for a discussion of this.** **5. Applicability 4.2.1 has been revised to remove 'applied on". The SDT believes that this addresses your concern. Applicability 4.2.2 and 4.2.3, respectively, address UFLS and UVLS specifically, and are not related to 4.2.1. The Supplementary Reference Document has been revised to clarify. PRC-005-2 would appear to apply to both cited examples.** **6. This is properly a concern to be addressed within the current SDT that is developing a revised definition of Bulk Electric System.** **7. The date in Clause F of the standard related to the Supplementary Reference Document has been revised.** **8. a. The SDT disagrees. Station dc supply for UFLS/UFLS only is limited in its impact, and the SDT believes that using the same intervals as for the related control circuits.** **b. "Tolerances" does not fully describe the parameters for maintenance of station dc supply; "perform as designed" is far more inclusive.** **c. The SDT intends that tripping of the interrupting device for UFLS/UVLS is not required, but that the other portions of the dc control circuitry still shall be maintained. See Section 15.3 of the Supplementary Reference Document.** **d. The SDT believes that mechanical solenoid-operated devices share performance attributes (and failure modes) with electromechanical relays and need to be tested at similar intervals. Performance-Based maintenance is an option to increase the intervals if the performance of these devices supports those intervals**		
LCRA Transmission Services Corporation	No	
MidAmerican Energy	Yes	1. MidAmerican remains concerned that including requirements for testing of electromechanical trip or auxiliary devices (Table 1-5 Row 3) will in some cases require entire bus outages that will compromise the BES reliability due to the need for entities across the US to take multiple BES elements out of service during the testing. If this requirement is retained additional time should be included in the implementation plan to allow for system modifications, such as the installation of relay test switches, to potentially allow

Organization	Yes or No	Question 5 Comment
		for this testing while minimizing testing outages. 2. Clarify that in the definition of Component Type that Transmission Owners are allowed the latitude to designate their own definitions for each of the Component Types, not just control circuits. 3. In the implementation schedule time periods are provided within which compliance deadlines and percentages of compliance are given. The following clarifications are recommended: 1. In calculating percentage of compliance for purposes of demonstrating progress on the implementation plan the percentages are calculated based on the total population of the protection system components that an entity has that fit the component category and allowable interval. 2. To obtain compliance with the percentage completion requirements of the implementation schedule an entity needs to have completed at least one prescribed maintenance activity of that component type and interval. 4. In the purpose statement delete “affecting” and replace it with “protecting”. The purpose of the standard deals with systems that protect the BES. 5. In sections R1 and R4.2.1 delete “applied on or” as unneeded and potentially confusing. The goal is to cover protection systems designed to protect. 6. Clarify the meaning of “state of charge” on page 14 in Table 1-4. 7. In Table 1-4 Component Type Station dc Supply, “Any dc supply for a UFLS or UVLS system” should have the same maximum maintenance period as other dc supplies. 8. Table 1-5 Component Type Control Circuitry, the table allows for unmonitored trip coils for UFLS or UVLS breakers to have “no periodic maintenance”. The PRC-005-2 Supplementary Frequently Asked Question #7B and #7C give excellent reasoning for not requiring maintenance on the trip coil component due to the larger number of failures that would be required to have any substantial impact to the BES as well as the statement that distribution breakers are operated often on just fault clearing duty already. We believe that the unmonitored control circuitry has the same level of minimal BES impact and is also being tested each time the distribution breaker undergoes fault clearing duty. With this logic, we do not see why there would be different maintenance requirements for these two components.
Response: Thank you for your comments. **1. The SDT believes that mechanical solenoid-operated devices share performance attributes (and failure modes) with electromechanical relays and need to be tested at similar intervals. Performance-Based maintenance is an option to increase the intervals if the performance of these devices supports those intervals.**		

Organization	Yes or No	Question 5 Comment
2. For components other than control circuitry, the SDT believes that identification of the components as established within the draft Standard is appropriate. There is no latitude regarding component types. **3. The SDT believes that the Implementation Plan clearly agrees with your interpretation, and no clarification seems necessary.** **4. The "Purpose" is defined by the SAR.** **5. Requirement R1 and Requirement R4, Part 4.2.1 have been modified as you suggested.** **6. Table 1-4 has been revised to remove "state of charge" from the activities.** **7. The SDT disagrees. Station dc supply for UFLS/UVLS only is limited in its impact, and the SDT believes that using the same intervals as for the related control circuits is appropriate.** **8. For the control circuitry of UFLS/UVLS, the relatively frequent breaker operations may not be reflective of proper functioning for UFLS/UVLS function. Therefore, minimal maintenance activities are necessary for these cases.**		
Ameren	Yes	(1) We believe that R1.5 and R4.2 "Calibration tolerances or other equivalent parameters" requirements should be removed. Neither the Supplement nor the FAQ address the expectation for them. While we agree that tolerances are needed and used, they need not be specified as part of this standard. (2) The Data retention is too onerous (a) For those components with numerous cycles between on-site audits, retaining and providing evidence of the two most recent distinct maintenance performances and the date of the others should be sufficient. Additionally, we are subject to self-certification, spot audits and/or inquiries at any time between on-site audits as well. (b) For those components with cycles exceeding on-site audit interval, retaining and providing evidence of the most recent distinct maintenance performance and the date of the preceding one should be sufficient. Auditors will have reviewed the preceding maintenance record. Retaining these additional records consumes resources with no reliability gain. (3) Definition of the BES perimeter should be included in accordance with Project 2009-17 Interpretation. (a)Facilities Section 4.2.1 "or designed to provide protection for the BES" needs to be clarified so that it incorporates the latest Project 2009-17 interpretation. The industry has deliberated and reached a conclusion that provides a meaningful and appropriate border for the transmission Protection System; this needs to be acknowledged in PRC-005-2 and carried forward. (4)System-connected station service transformers (4.2.5.5) should be omitted, because (a) Generating Plant system-connected Station Service transformers should not be included as a Facility because they are serving load. Omit 4.2.5.5 from the standard. There is no difference between a station service transformer and a transformer serving load on the distribution system. This has no impact on the BES, which is defined as the system greater than 100 kV. (b) system-connected station service transformers in the same table as well as from table-to-table can be overwhelming. This would help keep Regional Entities and System Owners from

Organization	Yes or No	Question 5 Comment
		making errors. (5) Retention of maintenance records for replaced equipment should be omitted. FAQ II 2B final sentence states that documentation for replaced equipment must be retained to prove the interval of its maintenance. We disagree with this because the replaced equipment is gone and has no impact on BES reliability; and such retention clutters the data base and could cause confusion. For example, it could result in saving lead acid battery load test data beyond the life of its replacement. (6) Battery inspection every 4 months is sufficient. IEEE battery maintenance standards call for quarterly inspections. These are targets, though, not maximums. An entity wishing to avoid non-compliance for an interval that might extend past three calendar months due to storms and outages must set a target interval of two months thereby increasing the number of inspections each year by half again. This is unnecessarily frequent. We suggest changing the maximum interval for battery inspections to 4 calendar months. For consistency, we also suggest that all intervals expressed as 3 calendar months be changed to 4 calendar months. (7) PSMP Implement Date should commence at the beginning of a Calendar year. This is the most practical way to transition assets from our existing PRC-005-1 plans. (8) Please clarify the meaning of “state of charge” for batteries. Does this mean specific gravity testing or what? (9) Please clarify that instrument transformer itself is excluded. Please clarify that the instrument transformer itself is excluded. The standard indicates that only voltage and current signals need to be verified in Table 1-3, but the recently approved Protection System definition wording can be mis-interpreted to mean they are included. FAQ 11.3.A is helpful.

Response: Thank you for your comments.

1. **The SDT has determined that the fundamental concerns of Requirement R1, Part 1.5 and the associated changes are addressed within the PSMP definition, and that Requirement R1, Part 1.5 is not necessary; therefore, it has been removed. Requirement R4 has also been re-drafted to address various related concerns noted within comments. The associated VSL has also been revised. Please see Supplementary Reference Document, Section 8 for a discussion of this.**
2. **In order that a Compliance Monitor can be assured of compliance, the SDT believes that the Compliance Monitor will need the data of the most recent performance of the maintenance, as well as the data of the preceding one to validate that entities have been in compliance since the last audit (or currently, since the beginning of mandatory compliance). The SDT has specified the data retention in the posted standard to establish this level of documentation. This seems to be consistent with the current practices of several Regional Entities.**
3. **When the interpretation (Project 2009-17) is approved, the SDT for PRC-005-2 will consider if the interpretation is appropriate for PRC-005-2 and**

Organization	Yes or No	Question 5 Comment
make associated changes. **4. In response to many comments, including yours, the SDT has removed 4.2.5.5 from the Applicability of the standard.** **5. The SDT has decided to eliminate the FAQ and incorporate topics and discussion from the FAQ within the Supplementary Reference Document. Your comments will be considered within that activity. The SDT believes that entities should retain the evidence necessary to demonstrate compliance for the entire period reflected within Data Retention, and the discussion within the Supplementary Reference Document suggests that this includes records of retired equipment.** **6. The SDT believes that the 3-month interval specified in the Standard is appropriate.** **7. The guidance provided to the SDT provides that the implementation dates should begin on the first day of a calendar quarter.** **8. Table 1-4 has been revised to remove "state of charge" from the activities.** **9. The SDT intends that the instrument transformer and associated circuitry be verified to be functional, but believes that customary apparatus maintenance (dielectric, infrared, etc) are not relevant to PRC-005-2. The SDT has decided to eliminate the FAQ and incorporate topics and discussion from the FAQ within the Supplementary Reference Document.**		
Xcel Energy	Yes	1. Requirement R1.4 in part requires that the entity's PSMP includes all monitoring attributes to include those specified in Tables 1-1 through 1-5. Requirement R2 requires that entities that use maintenance intervals for monitored Protection Systems shall verify those components possess the monitoring attributes identified in Tables 1-1 through 1-5. The intent and differences between these 2 requirements is unclear. If an entity does not choose to use monitored intervals, it makes no sense to require them to include the monitoring attributes identified in Tables 1-1 through 1-5 within their PSMP. Furthermore if an entity fails to meet requirement R1.4 for including identified monitoring attributes in its program, it will by default also have violated R2. There seems the possibility of double jeopardy between R1.4 and R2. The intent of R2 is fairly obvious but the intent of including monitoring attributes in R1.4 is not evident. Please provide a discussion within the FAQ to better explain the differences between these two requirements as they relate to monitoring attributes. 2. As written, requirement R1.5 and application of R1.5 acceptance criteria via requirement R4.2 would open entities up to vague interpretations by compliance personnel as to what constitutes adequate acceptance criteria – particularly in the area of subjective inspection results – e.g., battery cell visual inspections. We recommend that R1.5 be re-stated to clarify that acceptance criteria need only be provided for numerically measurable parameters. FAQs should be written to better explain the intent of R1.5 and to provide examples of acceptance criteria and to hopefully drive consistency amongst compliance personnel interpretation of acceptance criteria requirements. Consideration should be given to identifying which maintenance requirements in the Tables would generate quantifiable and measurable test results for which acceptance

Organization	Yes or No	Question 5 Comment
		criteria would be expected.

Response: Thank you for your comments.

1. **The SDT had concluded that Requirement R2 is redundant with Requirement R1, Part 1.4, and has deleted R2 (together with the associated Measure and VSL).**
2. **The SDT has determined that the fundamental concerns of Requirement R1, Part 1.5 and the associated changes are addressed within the PSMP definition, and that Requirement R1, Part 1.5 is not necessary; therefore, it has been removed. Requirement R4 has also been re-drafted to address various related concerns noted within comments. The associated VSL has also been revised. Please see Supplementary Reference Document, Section 8 for a discussion of this.**

END OF REPORT

NERC
NORTH AMERICAN ELECTRIC RELIABILITY CORPORATION

Consideration of Comments on Non-binding Poll of VRFs and VSLs associated with PRC-005-2 – Protection System Maintenance (Project 2007-17)

The Project 2007-17 Drafting Team thanks all commenters who submitted comments on the non-binding poll of VRFs and VSLs associated with the proposed revisions to PRC-005-2. The standard and associated VRFs and VSLs were posted for a 30-day public comment period from November 17, 2010 through December 17, 2010, with a 10-day ballot beginning on December 10, 2010 through December 21, 2010. The stakeholders were asked to provide feedback on the VRFs and VSLs. There were 28 sets of comments, including comments from more than 46 different people from approximately 26 companies representing 6 of the 10 Industry Segments as shown in the table on the following pages.

http://www.nerc.com/filez/standards/Protection_System_Maintenance_Project_2007-17.html

If you feel that your comment has been overlooked, please let us know immediately. Our goal is to give every comment serious consideration in this process! If you feel there has been an error or omission, you can contact the Vice President and Director of Standards, Herb Schrayshuen, at 609-452-8060 or at herb.schrayshuen@nerc.net. In addition, there is a NERC Reliability Standards Appeals Process.[1]

[1] The appeals process is in the Reliability Standards Development Procedures: http://www.nerc.com/standards/newstandardsprocess.html.

The Industry Segments are:

1 — Transmission Owners
2 — RTOs, ISOs
3 — Load-serving Entities
4 — Transmission-dependent Utilities
5 — Electric Generators
6 — Electricity Brokers, Aggregators, and Marketers
7 — Large Electricity End Users
8 — Small Electricity End Users
9 — Federal, State, Provincial Regulatory or other Government Entities
10 — Regional Reliability Organizations, Regional Entities

Segment	1
Organization	Ameren Services
Member	Kirit S. Shah
Comment	The Lower VSL for all Requirements should begin above 1% of the components. For example for R4: "Entity has failed to complete scheduled program on 1% to 5% of total Protection System components." PRC-005-2 unrealistically mandates perfection without providing technical justification. A basic premise of engineering is to allow for reasonable tolerances, even Six Sigma allows for defects. Requiring perfection may well harm reliability in that valuable resources will be distracted from other duties.
Response	**Thank you for your comments. The NERC criteria for VSLs do not currently permit them to allow some level of non-performance without being in violation.**
Segment	1,3,6
Organization	American Electric Power, AEP Marketing
Member	Paul B. Johnson, Raj Rana, Edward P. Cox
Comment	1. The VSL table should be revised to remove the reference to the Standard Requirement 1.5 in the R1 "High" VSL. 2. All four levels of the VSL for R2 make reference to a "condition-based PSMP." However, nowhere in the standard is the term "condition-based" used in reference to defining ones PSMP. The VSL for R2 should be revised to remove reference to a condition-based PSMP; alternatively the Standard could be revised to include the term "condition-based" within the Standard Requirements and Table 1. 3. In multiple instances, Table 1 uses the phrase "No periodic maintenance specified" for the Maximum Maintenance Interval. Is this intended to imply that a component with the designated attributes is not required to have any periodic maintenance? If so, the wording should more clearly state "No periodic maintenance required" or perhaps "Maintain per manufacturers recommendations." Failure to clearly state the maintenance requirement for these components leaves room for interpretation on whether a Registered Entity has maintenance and testing program for devices where the Standard has not specified a periodic maintenance interval and the manufacturer states that no maintenance is required. 4. Three different types of maintenance programs (time-based, performance-based and condition-based) are referenced in the standard or VSLs, yet the time-based and condition-based programs are neither defined nor described. Certain terms defined within the definition section (such as Countable Event or Segment) only make sense knowing what

	those three programs entail. These programs should be described within the standard itself and not assume knowledge of material in the Supplementary Reference or FAQ.
Response	**Thank you for your comments.** **1. The SDT has determined that the fundamental concerns of Requirement R1, Part 1.5 and the associated changes are addressed within the PSMP definition, and that Requirement R1, Part 1.5 is not necessary; therefore, it has been removed. Requirement R4 has also been re-drafted to address various related concerns noted within comments. The associated VSL has also been revised. Please see Supplementary Reference Document, Section 8 for a discussion of this.** **2. The SDT concluded that Requirement R2 is redundant with Requirement R1, Part 1.4, and has deleted Requirement R2 (together with the associated Measure and VSL).** **3. If the indicated monitoring attributes are present, no "hands-on" periodic maintenance is required, as the monitoring of the component is providing a continuing indication of its functionality.** **4. The term, "condition-based" has been removed from the draft standard. The other terms are used, but are clear in the context in which they are used.**
Segment	1
Organization	Beaches Energy Services
Member	Joseph S. Stonecipher
Comment	The VRF of R1 should be Low since the attached tables are essentially the PSMP.
Response	**Thank you for your comments. The SDT disagrees; the Tables establish the intervals and activities, and Requirement R1 addresses the establishment of an entity's individual PSMP.**
Segment	3
Organization	City of Green Cove Springs
Member	Gregg R Griffin

Comment	1. Small entities with only one or two BES substations may not have enough components to take advantage of the expanded maintenance intervals afforded by a performance-based maintenance program. Aggregating these components across different entities doesn't seem too logical considering the variations at the sub-component level (wire gauge, installation conditions, etc.) 2. Trip circuits are interconnected to perform various functions. Testing a trip path may involve disabling other features (i.e. breaker failure or reclosing) not directly a part of the test being performed. Temporary modifications made for testing introduce a chance to unknowingly leave functions disabled, contacts shorted, jumpers lifted, etc. after testing has been completed. Trip coils and cable runs from panels to breaker can be made to meet the requirements for monitored components. The only portions of the circuitry where this may not be the case is in the inter and intra-panel wiring. Because such portions of the circuitry have no moving parts and are located inside a control house, the exposure is negligible and should not be covered by the requirements. Entities will be at increased compliance risk as they struggle to properly document the testing of all parallel tripping paths. 3. Table 1-4 requires a comparison of measured battery internal ohmic value to battery baseline. Since battery manufacturers do not provide this value, it is unclear what the "baseline" values ought to be if an entity recently began performing this test (assuming it's several years after the commissioning of the battery.) Would it be acceptable for an entity to establish baseline values based on statistical analysis of multiple test results specific to a given battery manufacturer and design? 4. UFLS and UVLS maintenance and testing is greatly expanded, e.g., we interpreted PRC-008/011 as being only the UFLS/UVLS equipment. The new PRC-005 sweeps in other protection system components, e.g., communications (probably not applicable), voltage and current sensing devices (e.g., instrument transformers), Station DC supply, control circuitry. What's key about this is that these components are all part of distribution system protection, so, these activities would not be covered by other BES protection system maintenance and testing. I'm sure we are testing batteries and the like, but, we are probably not testing battery chargers and control circuitry, and, in many cases distribution circuits are such that it is very difficult, if not impossible, to test control circuitry to the trip coil of the breaker without causing an outage of the customers on that distribution circuit. There is no real reliability need for this either. Unlike Transmission and Generation Protection Systems which are needed to clear a fault and may only have one or two back-up systems, there are thousands and thousands of UFLS relays and if one fails to operate, it will not be noticeable to the event. It does make sense to test the relays themselves in part to ensure that the regio0nsl UFLS program is being met, but, to test the other protection system components is not worthwhile. Note that DC Supplies and most of the control

	circuitry of distribution lines are "tested" frequently by distribution circuits clearing faults such as animals, vegetation blow-ins, lightning, etc., on distribution circuits, reducing the value of testing to just about null. However, this version is better than prior versions because it essentially requires the entity to determine it's own period of maintenance and testing for UFLS/UVLS for DC Supply and control circuitry. 5. Applicability, 4.2.1, should reflect the Y&W and Tri-State interpretation (Project 2009-17) of "transmission Protection System" and should state: "Protection Systems applied on, or designed to provide protection for a BES Facility and that trips a BES Facility" 6. Applicability, 4.2. - does not reflect the interpretation of Project 20009-10 that excludes non-electrical protection (e.g., sudden pressure relays) and auxiliary relays. Because the definition of Protection System (recently approved) does not clearly exclude "non-electrical" protection, the Applicability section should. For instance,, a vibration monitor, steam pressure, etc. protection of generators, sudden pressure protection of transformers, etc. should not be included in the standard. An alternative is to change the definition of Protection System to make sure it only includes electrical the VRF of R1 should be Low since the attached tables are essentially the PSMP.
Response	**Thank you for your comments.** **1. Entities are not required to use performance-based maintenance programs. Requirement R3 and Attachment A are provided for the use of entities that can (and desire to) avail themselves of this approach.** **2. The requirement relative to control circuitry does not explicitly require trip or functional testing of the entire path; it requires that entities verify all paths without specifying the method of doing so. Please see Section 15.5 of the Supplementary Reference Document for a detailed discussion.** **3. Typical baseline values for various types of lead-acid batteries can be obtained from the test equipment manufacturer, the battery vendor, and perhaps other sources for batteries that are already in service. For new batteries, the initial battery baseline ohmic values should be measured upon installation and used for trending.** **4. For UFLS and UVLS, the maintenance activities related to station dc supply and control circuitry are somewhat constrained relative to similar activities for Protection Systems in general. Regardless, without proper functioning of these component types, UFLS and UVLS will not respond as expected, and will therefore degrade BES system reliability, particularly during the stressed system conditions for which UFLS and UVLS are installed. Relative to control circuitry, Table 1-5 specifically excludes UFLS and UVLS from maintenance activities relate to the interrupting device trip coil.** **5. This interpretation is not yet approved. When this interpretation is approved, the SDT will**

	incorporate it within PRC-005-2. However, the SDT has made changes to Applicability 4.2.1. **6. The recently-balloted revision of the definition of Protection System, which has been approved by the NERC Board of Trustees and will soon be filed with FERC for approval, clearly includes only protective relays that respond to electrical quantities. As for auxiliary relays, the interpretation to which you refer states that they are not explicitly included, but are included to the degree that an entity's Protection System control circuitry addresses them (which has been identified as a reliability gap), and are being added to PRC-005-2 to resolve the gap.**
Segment	1, 5, 6
Organization	Consolidated Edison Co. of New York
Member	Christopher L de Graffenried, Wilket (Jack) Ng, Nickesha P Carrol
Comment	VSL/VRF Ballot Comments: The Modified VSL's and VRF's – 1. Because all the requirements deal with protective system maintenance and testing, violations could directly cause or contribute to bulk electric system instability, etc., the VRFs should all be "High". 2. The Time Horizons should all be "Operations Planning" because of the immediacy of a failure to meet the requirements. 3. For the R1 Lower VSL, include a second part to read: Failed to identify calibration tolerances or other equivalent parameters for one Protection System component type that establish acceptable parameters for the conclusion of maintenance activities. 4. For the R1 Moderate VSL, suggest similar wording as for the Lower VSL but specifying two Protection System component types. 5. For the R1 High VSL, suggest changing the wording of the 3rd part to be similar to the Lower VSL to match the requirement and to cater for more than two Protection System component types. 6. For the R3 Severe VSL, in part 3, replace "less" with fewer.
Response	**Thank you for your comments.** **1. Consideration of the VRFs, in association with the VRF Guidelines, yields the VRFs as established within the draft Standard.** **2. The SDT has reviewed the time horizons, and believes that Requirement R1 is properly assigned a Long-Term Planning time horizon, as the activities to develop a program and to determine the monitoring attributes of components are performed within the related time period. The SDT concluded that Requirement R2 is redundant to Requirement R1 and has deleted Requirement R2 (together with the Measure and**

	VSL). **3. The SDT has determined that the fundamental concerns of Requirement R1, Part 1.5 and the associated changes are addressed within the PSMP definition, and that Requirement R1, Part 1.5 is not necessary; therefore, it has been removed. The associated VSL has also been revised.** **4. Requirement R1 'Moderate' appears to be similar to Requirement R1 'Lower' as you suggest.** **5. The SDT believes that, if more than two Protection System component types are not addressed, the 'Severe' VSL is appropriate.** **6. The SDT believes that your suggestion is similar to the existing text, and declines to modify the standard.**
Segment	5
Organization	Constellation Power Source Generation, Inc.
Member	Amir Y Hammad
Comment	The VRFs and VSLs still do not take into account smaller generation facilities that do not have as many protection system components as other facilities. They are penalized much more heavily.
Response	**Thank you for your comments. The percentage levels within Requirement R4 are consistent with many other NERC Standards, and are also consistent with the guidance within the NERC VSL Guidelines.**
Segment	4
Organization	Consumers Energy
Member	David Frank Ronk
Comment	1. Table 1-3 states, "are received by the protective relays". Does this require that the inputs to each individual relay must be checked, or is it sufficient to verify that acceptable signals are received at the relay panel, etc? 2. Relative to Table 1-5, the activities will likely require that system components be removed from service to complete those activities. If the changes to the BES definition (per the FERC Order) causes system elements such as 138 kV connected distribution transformers to be considered as BES, these components can not be removed from service for maintenance without outaging customers. The standard must exempt these components from the activities of Table 1-5 if the activity would result in deenergizing customers. 3. For the component types addressed in Tables 1-3 and 1-5, the requirements may cause entities to identify components very differently than they are currently doing, and doing so may take several years to complete. The Implementation Plan for R1 and R4 is too aggressive in that it may not

	permit entities to complete the identification of discrete components and the associated maintenance and implement their program as currently proposed. We propose that the Implementation Plan specifically address the components in Table 1-3 and 1-5 with a minimum of 3 calendar years for R1 and 12 calendar years after that for R4. 4. As for the interval in Table 1-4 regarding the battery terminal connection resistance, we believe that an 18-month interval is excessively frequent for this activity, and suggest that it be moved to the 6-calendar-year interval. 5. In Table 1-4, we currently re-torque all of the battery terminal connections every 4-years, rather than measuring the terminal connection resistance to determine if the connections are sound. Disregarding the interval, would this activity satisfy the "verify the battery terminal connection resistance" activity?
Response	**Thank you for your comments.** **1. The SDT intends that the voltage and current signals properly reach each individual relay, but there may be several methods of accomplishing this activity.** **2. This concern seems more properly to be one to be addressed during the activities to develop the new BES definition, rather than within PRC-005-2** **3. The Implementation Plan for Requirement R1 has been modified from 6 months to 12 months. The Standard has also been modified (Requirement R1, Part 1.1) to not specifically require identification of all individual Protection System components. The Implementation Plan for Requirement R4 has been revised to add one year to all established dates.** **4. IEEE 450, 1188, 1106 all recommend this activity at a 12-month interval. Please see Section 15.4.1 of the Supplementary Reference Document for a discussion of this activity.** **5. Re-torqueing the battery terminals would not meet this requirement.**
Segment	5
Organization	Consumers Energy
Member	James B Lewis
Comment	The issues raised in our comments to the proposed Standard need to be addressed.
Response	**Thank you for your comments. Please see our response to your comments which were submitted during the formal comment period.**
Segment	1, 3, 5, 6

Organization	Dominion
Member	John K Loftis, Michael F Gildea, Mike Garton, Louis S Slade
Comment	VSL R3. How do you measure a percentage of countable events over a period of time? How are you to determine what the total population to be considered? An entity should not be penalized if they are following their program, correcting issues, and documenting all actions, even if there is a high failure rate in an instance.
Response	**Thank you for your comments. Attachment A, to which Requirement R3 refers, specifies that countable events are assessed on the basis of "for the greater of either the last 30 components maintained or all components maintained in the previous year."**
Segment	1, 3, 4, 5, 6
Organization	FirstEnergy Energy Delivery, FirstEnergy Solutions, Ohio Edison Company
Member	Robert Martinko, Kevin Querry, Kenneth Dresner, Mark S Travaglianti
Comment	Please see FirstEnergy's comments submitted separately through the comment period posting.
Response	**Thank you for your comments. Please see our response to your comments which were submitted during the formal comment period.**
Segment	4, 5
Organization	Florida Municipal Power Agency
Member	Frank Gaffney, David Schumann
Comment	1. UFLS and UVLS maintenance and testing is greatly expanded, e.g., we interpreted PRC-008/011 as being only the UFLS/UVLS equipment. The new PRC-005 sweeps in other protection system components, e.g., communications (probably not applicable), voltage and current sensing devices (e.g., instrument transformers), Station DC supply, control circuitry. What's key about this is that these components are all part of distribution system protection, so, these activities would not be covered by other BES protection system maintenance and testing. I'm sure we are testing batteries and the like, but, we are probably not testing battery chargers and control circuity, and, in many cases distribution circuits are such that it is very difficult, if not impossible, to test control circuitry to the trip coil of the breaker without causing an outage of the customers on that distribution circuit. There is no real reliability need for this either. Unlike Transmission and Generation Protection Systems which are needed to clear a fault and may only have one or two back-up systems, there are thousands and thousands of UFLS relays and if one fails to operate, it will not be noticeable to the event. It does make sense to test the relays themselves in part to ensure that the regio0nsl UFLS program is being met, but, to test the other protection system components is not worthwhile. Note that DC Supplies and most of the control

	circuitry of distribution lines are "tested" frequently by distribution circuits clearing faults such as animals, vegetation blow-ins, lightning, etc., on distribution circuits, reducing the value of testing to just about null. However, this version is better than prior versions because it essentially requires the entity to determine it's own period of maintenance and testing for UFLS/UVLS for DC Supply and control circuitry. 2. Applicability, 4.2.1, should reflect the Y&W and Tri-State interpretation (Project 2009-17) of "transmission Protection System" and should state: "Protection Systems applied on, or designed to provide protection for a BES Facility and that trips a BES Facility" 3. Applicability, 4.2. - does not reflect the interpretation of Project 20009-10 that excludes non-electrical protection (e.g., sudden pressure relays) and auxiliary relays. Because the definition of Protection System (recently approved) does not clearly exclude "non-electrical" protection,the Applicability section should. For instance,, a vibration monitor, steam pressure, etc. protection of generators, sudden pressure protection of transformers, etc. should not be included in the standard. An alternative is to change the definition of Protection System to make sure it only includes electrical the VRF of R1 should be Low since the attached tables are essentially the PSMP.
Response	**Thank you for your comments.** **1. For UFLS and UVLS, the maintenance activities related to station dc supply and control circuitry are somewhat constrained relative to similar activities for Protection Systems in general. Regardless, without proper functioning of these component types, UFLS and UVLS will not respond as expected, and will therefore degrade BES system reliability, particularly during the stressed system conditions for which UFLS and UVLS are installed. Relative to control circuitry, Table 1-5 specifically excludes UFLS and UVLS from maintenance activities relate to the interrupting device trip coil.** **2. This interpretation is not yet approved. When this interpretation is approved, the SDT will incorporate it within PRC-005-2. However, the SDT has made changes to Applicability 4.2.1.** 3. **The recently-balloted revision of the definition of Protection System, which has been approved by the NERC Board of Trustees and will soon be filed with FERC for approval, clearly includes only protective relays that respond to electrical quantities. As for auxiliary relays, the interpretation to which you refer states that they are not explicitly included, but are included to the degree that an entity's Protection System control circuitry addresses them(which has been identified as a reliability gap), and are being added to PRC-005-2 to resolve the gap.**
Segment	6

Organization	Florida Municipal Power Pool
Member	Thomas E Washburn
Comment	the VRF of R1 should be Low since the attached tables are essentially the PSMP.
Response	**Thank you for your comments. The SDT disagrees; the Tables establish the intervals and activities, and Requirement R1 addresses the establishment of an entity's individual PSMP.**
Segment	4
Organization	Fort Pierce Utilities Authority
Member	Thomas W. Richards
Comment	The VRF of R1 should be Low since the attached tables are essentially the PSMP.
Response	**Thank you for your comments. The SDT disagrees; the Tables establish the intervals and activities, and Requirement R1 addresses the establishment of an entity's individual PSMP.**
Segment	1, 3
Organization	Hydro One Networks, Inc.
Member	Ajay Garg, Michael D. Penstone
Comment	Hydro One is casting a negative vote with the following comments: 1. R1 Lower - Include a second part as follows: "Failed to identify calibration tolerances or other equivalent parameters for one Protection System component type that establish acceptable parameters for the conclusion of maintenance activities. " 2. R1 Moderate - Similar wording as for the Lower VSL but catering for two Protection System component types. R1 High - Change the wording of the 3rd part to be similar to the Lower VSL to match the requirement and to cater for more than two Protection System component types.
Response	**Thank you for your comments.** 1. **The SDT has determined that the fundamental concerns of Requirement R1, Part 1.5 and the associated changes are addressed within the PSMP definition, and that Requirement R1, Part 1.5 is not necessary; therefore, it has been removed. Requirement R4 has also been re-drafted to address various related concerns noted within comments. The associated VSL has also been revised. Please see Supplementary Reference Document, Section 8 for a discussion of this.** 2. **Requirement R1 'Moderate' appears to be similar to Requirement R1 'Lower' as you suggest. The SDT believes that, if more than two Protection System component types are not addressed, the 'Severe' VSL is appropriate.**
Segment	5
Organization	Indeck Energy Services, Inc.

Member	Rex A Roehl
Comment	The Violation Risk Factors should not be the same for all registered entities because the risk in a violation by a 20 MW wind farm connected at 115 kV is de minimis compared to that same violation at a 2,000 MW transmission substation or generator. The basic structure of this revision to PRC-005 is totally defective. Combining 4 standards that each have something to do with relays into one omnibus standard was wrongheaded. The Violation Severity Levels need to match the violation and four arbitrary categories cannot do so for the myriad of components, systems and varying numbers of them for one registered entity that are covered by this draft standard.
Response	**Thank you for your comments. The VRFs are not dependent on size, and must be assigned on a requirement-by-requirement basis.**
Segment	2
Organization	Independent Electricity System Operator
Member	Kim Warren
Comment	1. R1 Lower - We suggest including a second part as follows: "Failed to identify calibration tolerances or other equivalent parameters for one Protection System component type that establish acceptable parameters for the conclusion of maintenance activities. " 2. R1 Moderate - We suggest similar to the Lower VSL but catering for two Protection System component types. R1 High - We suggest changing the wording of the 3rd part to match the requirement and to cater for more than two Protection System component types. 3. Editorial Comment to Severe VSL for R3: In part 3, replace "less" with "fewer".
Response	**Thank you for your comments.** **1. The SDT has determined that the fundamental concerns of Requirement R1, Part 1.5 and the associated changes are addressed within the PSMP definition, and that Requirement R1, Part 1.5 is not necessary; therefore, it has been removed. Requirement R4 has also been re-drafted to address various related concerns noted within comments. The associated VSL has also been revised. Please see Supplementary Reference Document, Section 8 for a discussion of this.** **2. Requirement R1 'Moderate' appears to be similar to Requirement R1 'Lower' as you suggest. The SDT believes that, if more than two Protection System component types are not addressed, the 'Severe' VSL is appropriate.** **3. The SDT has elected not to change the VSL for Requirement R3 as suggested.**
Segment	1
Organization	Lake Worth Utilities
Member	Walt Gill

Comment	1. UFLS and UVLS maintenance and testing is greatly expanded, e.g., we interpreted PRC-008/011 as being only the UFLS/UVLS equipment. The new PRC-005 sweeps in other protection system components, e.g., communications (probably not applicable), voltage and current sensing devices (e.g., instrument transformers), Station DC supply, control circuitry. What's key about this is that these components are all part of distribution system protection, so, these activities would not be covered by other BES protection system maintenance and testing. I'm sure we are testing batteries and the like, but, we are probably not testing battery chargers and control circuity, and, in many cases distribution circuits are such that it is very difficult, if not impossible, to test control circuitry to the trip coil of the breaker without causing an outage of the customers on that distribution circuit. There is no real reliability need for this either. Unlike Transmission and Generation Protection Systems which are needed to clear a fault and may only have one or two back-up systems, there are thousands and thousands of UFLS relays and if one fails to operate, it will not be noticeable to the event. It does make sense to test the relays themselves in part to ensure that the regio0nsl UFLS program is being met, but, to test the other protection system components is not worthwhile. Note that DC Supplies and most of the control circuitry of distribution lines are "tested" frequently by distribution circuits clearing faults such as animals, vegetation blow-ins, lightning, etc., on distribution circuits, reducing the value of testing to just about null. However, this version is better than prior versions because it essentially requires the entity to determine it's own period of maintenance and testing for UFLS/UVLS for DC Supply and control circuitry. 2. Applicability, 4.2.1, should reflect the Y&W and Tri-State interpretation (Project 2009-17) of "transmission Protection System" and should state: "Protection Systems applied on, or designed to provide protection for a BES Facility and that trips a BES Facility" 3. Applicability, 4.2. - does not reflect the interpretation of Project 20009-10 that excludes non-electrical protection (e.g., sudden pressure relays) and auxiliary relays. Because the definition of Protection System (recently approved) does not clearly exclude "non-electrical" protection,the Applicability section should. For instance,, a vibration monitor, steam pressure, etc. protection of generators, sudden pressure protection of transformers, etc. should not be included in the standard. An alternative is to change the definition of Protection System to make sure it only includes electrical 4. the VRF of R1 should be Low since the attached tables are essentially the PSMP. 5. Table 1-4 requires a comparison of measured battery internal ohmic value to battery baseline. Since battery manufacturers do not provide this value, it is unclear what the “baseline” values ought to be if an entity recently began performing this test (assuming it’s several years after the commissioning of the battery.) Would it be acceptable for an entity to establish baseline values based on statistical analysis of multiple test results specific to a

	given battery manufacturer and design? 6. Small entities with only one or two BES substations may not have enough components to take advantage of the expanded maintenance intervals afforded by a performance-based maintenance program. Aggregating these components across different entities doesn't seem too logical considering the variations at the sub-component level (wire gauge, installation conditions, etc.) 7. Trip circuits are interconnected to perform various functions. Testing a trip path may involve disabling other features (i.e. breaker failure or reclosing) not directly a part of the test being performed. Temporary modifications made for testing introduce a chance to unknowingly leave functions disabled, contacts shorted, jumpers lifted, etc. after testing has been completed. Trip coils and cable runs from panels to breaker can be made to meet the requirements for monitored components. The only portions of the circuitry where this may not be the case is in the inter and intra-panel wiring. Because such portions of the circuitry have no moving parts and are located inside a control house, the exposure is negligible and should not be covered by the requirements. Entities will be at increased compliance risk as they struggle to properly document the testing of all parallel tripping paths.
Response	**Thank you for your comments.** **1. For UFLS and UVLS, the maintenance activities related to station dc supply and control circuitry are somewhat constrained relative to similar activities for Protection Systems in general. Regardless, without proper functioning of these component types, UFLS and UVLS will not respond as expected, and will therefore degrade BES system reliability, particularly during the stressed system conditions for which UFLS and UVLS are installed. Relative to control circuitry, Table 1-5 specifically excludes UFLS and UVLS from maintenance activities relate to the interrupting device trip coil.** **2. This interpretation is not yet approved. When this interpretation is approved, the SDT will incorporate it within PRC-005-2. However, the SDT has made changes to Applicability 4.2.1.** **3. The recently-balloted revision of the definition of Protection System, which has been approved by the NERC Board of Trustees and will soon be filed with FERC for approval, clearly includes only protective relays that respond to electrical quantities. As for auxiliary relays, the interpretation to which you refer states that they are not explicitly included, but are included to the degree that an entity's Protection System control circuitry addresses them(which has been identified as a reliability gap), and are being added to PRC-005-2 to resolve the gap.** **4. The SDT disagrees; the Tables establish the intervals and activities and Requirement R1 addresses the establishment of an entity's individual PSMP.**

	5. Typical baseline values for various types of lead-acid batteries can be obtained from the test equipment manufacturer, the battery vendor, and perhaps other sources for batteries that are already in service. For new batteries, the initial battery baseline ohmic values should be measured upon installation and used for trending. **6. Entities are not required to use performance-based maintenance programs. Requirement R3 and Attachment A are provided for the use of entities that can (and desire to) avail themselves of this approach.** **7. The requirement relative to control circuitry does not explicitly require trip or functional testing of the entire path; it requires that entities verify all paths without specifying the method of doing so. Please see Section 15.5 of the Supplementary Reference Document for a detailed discussion.**
Segment	1
Organization	Lakeland Electric
Member	Larry E Watt
Comment	The major reasons are that: 1. UFLS and UVLS maintenance and testing is greatly expanded, e.g., we interpreted PRC-008/011 as being only the UFLS/UVLS equipment. The new PRC-005 sweeps in other protection system components, e.g., communications (probably not applicable), voltage and current sensing devices (e.g., instrument transformers), Station DC supply, control circuitry. What's key about this is that these components are all part of distribution system protection, so, these activities would not be covered by other BES protection system maintenance and testing. I'm sure we are testing batteries and the like, but, we are probably not testing battery chargers and control circuity, and, in many cases distribution circuits are such that it is very difficult, if not impossible, to test control circuitry to the trip coil of the breaker without causing an outage of the customers on that distribution circuit. There is no real reliability need for this either. Unlike Transmission and Generation Protection Systems which are needed to clear a fault and may only have one or two back-up systems, there are thousands and thousands of UFLS relays and if one fails to operate, it will not be noticeable to the event. It does make sense to test the relays themselves in part to ensure that the regio0nsl UFLS program is being met, but, to test the other protection system components is not worthwhile. Note that DC Supplies and most of the control circuitry of distribution lines are "tested" frequently by distribution circuits clearing faults such as animals, vegetation blow-ins, lightning, etc., on distribution circuits, reducing the value of testing to just about null. However, this version is better than prior versions because it essentially requires the entity to determine it's own period of maintenance and testing for UFLS/UVLS for DC Supply and control circuitry.

	2. Applicability, 4.2.1, should reflect the Y&W and Tri-State interpretation (Project 2009-17) of "transmission Protection System" and should state: "Protection Systems applied on, or designed to provide protection for a BES Facility and that trips a BES Facility" 3. Applicability, 4.2. - does not reflect the interpretation of Project 20009-10 that excludes non-electrical protection (e.g., sudden pressure relays) and auxiliary relays. Because the definition of Protection System (recently approved) does not clearly exclude "non-electrical" protection,the Applicability section should. For instance,, a vibration monitor, steam pressure, etc. protection of generators, sudden pressure protection of transformers, etc. should not be included in the standard. An alternative is to change the definition of Protection System to make sure it only includes electrical 4. the VRF of R1 should be Low since the attached tables are essentially the PSMP.
Response	**Thank you for your comments.** **1. For UFLS and UVLS, the maintenance activities related to station dc supply and control circuitry are somewhat constrained relative to similar activities for Protection Systems in general. Regardless, without proper functioning of these component types, UFLS and UVLS will not respond as expected, and will therefore degrade BES system reliability, particularly during the stressed system conditions for which UFLS and UVLS are installed. Relative to control circuitry, Table 1-5 specifically excludes UFLS and UVLS from maintenance activities relate to the interrupting device trip coil.** **2. This interpretation is not yet approved. When this interpretation is approved, the SDT will incorporate it within PRC-005-2. However, the SDT has made changes to Applicability 4.2.1.** **3. The recently-balloted revision of the definition of Protection System, which has been approved by the NERC Board of Trustees and will soon be filed with FERC for approval, clearly includes only protective relays that respond to electrical quantities. As for auxiliary relays, the interpretation to which you refer states that they are not explicitly included, but are included to the degree that an entity's Protection System control circuitry addresses them(which has been identified as a reliability gap), and are being added to PRC-005-2 to resolve the gap.** **4. The SDT disagrees; the Tables establish the intervals and activities and Requirement R1 addresses the establishment of an entity's individual PSMP.**
Segment	6
Organization	Lakeland Electric
Member	Paul Shipps

Comment	Small entities with only one or two BES substations may not have enough components to take advantage of the expanded maintenance intervals afforded by a performance-based maintenance program. Aggregating these components across different entities doesn't seem too logical considering the variations at the sub-component level (wire gauge, installation conditions, etc.)
Response	**Thank you for your comments. Entities are not required to use performance-based maintenance programs. Requirement R3 and Attachment A are provided for the use of entities that can (and desire to) avail themselves of this approach.**
Segment	5,6
Organization	Luminant Energy, Luminant Generation Company LLC
Member	Brad Jones, Mike Laney
Comment	Luminant commends the PRC-005-2 Standard Drafting Team for its quality efforts in producing this version of the Standard however; Luminant must cast a negative ballot vote for the present version of the VRFs and VSLs for this Standard. The negative vote against is solely based on the addition of the VSL associated with Requirement R1 Part 1.5.
Response	**Thank you for your comments. The SDT has determined that the fundamental concerns of Requirement R1, Part 1.5 and the associated changes are addressed within the PSMP definition, and that Requirement R1, Part 1.5 is not necessary; therefore, it has been removed. Requirement R4 has also been re-drafted to address various related concerns noted within comments. The associated VSL has also been revised. Please see Supplementary Reference Document, Section 8 for a discussion of this.**
Segment	1,3,6
Organization	Manitoba Hydro
Member	Joe D Petaski, Greg C. Parent, Daniel Prowse
Comment	-The high VSL for R1 "Failed to include all maintenance activities relevant for the identified monitoring attributes specified in Tables 1-1 through 1-5" may be interpreted in different ways and should be further clarified.
Response	**Thank you for your comments. The SDT modified the VSL for clarity.**
Segment	2
Organization	Midwest ISO, Inc.
Member	Jason L Marshall

Comment	1. We disagree with the VRFs for R3, R4, and R5. R3, R4, and R5 are administrative requirements and duplicate to requirements in FAC-008 and FAC-009 that already require communication of facility ratings including those limited by relays. Thus, it should be Lower. 2. We disagree with the High VRF for Requirement R6 because the criteria in attachment will identify circuits that are not critical. If the criteria is modified per our comments on the standard and in the ballot, then we would agree with a High VRF. 3. Requirement R7 should be deleted as it represents double jeopardy. Thus, we do not agree with any VRF for it.
Response	**Thank you for your comments.** **1. It appears that this comment was intended to be offered on some other project, and does not appear relevant to PRC-005-2.** **2. It appears that this comment was intended to be offered on some other project, and does not appear relevant to PRC-005-2.** **3. It appears that this comment was intended to be offered on some other project, and does not appear relevant to PRC-005-2.**
Segment	1
Organization	Nebraska Public Power District
Member	Richard L. Koch
Comment	VRF's: The definition of a Medium Risk Requirement included on page 8 of the SAR states: "A requirement that, if violated, could directly affect the electrical state or the capability of the bulk electric system, or the ability to effectively monitor and control the bulk electric system." 1. The PSMP does not "directly" affect the electrical state or the capability of the bulk electric system. A failure of a Protection System component is required to "directly" affect the BES. Therefore, the PSMP has only an "indirect" affect on the electrical state or the capability of the BES. Requirements R1 through R3 and their subparts are administrative in nature in that they are comprised entirely of documentation. Therefore, I recommend changing the Violation Risk Factor of Requirements R1, R2, and R3 to Lower to be consistent with the Violation Risk Factors defined in the SAR. VSL's: 2. R2: Tables 1-1 through 1-5 refers to time-based maintenance programs. I recommend changing "condition-based" to "time-based" in all four severity levels. 3. SAR Attachment B - Reliability Standard Review Guidelines states that violation severity levels should be based on the following equivalent scores: Lower: More than 95% but less than 100% compliant Moderate: More than 85% but less than or equal to 95% compliant High: More than 70% but less than equal to 85% compliant Severe: 70% or less compliant I recommend revising the percentages of the violation severity levels to be consistent with

	the SAR. 4. R3: The performance-based maintenance program identified in PRC-005 Attachment A provides the requirements to establish the technical justification for the initial use of a performance-based PSMP and the requirements to maintain the technical justification for the ongoing use of a performance-based PSMP. However, it appears the VSLs for Requirement R3 only addresses the ongoing use of the technical justification. I recommend revising the VSLs for R3 to include the initial use of the technical justification. a. Item 2) of R3 Severe VSL is a duplicate of Item 2) of R3 Lower VSL. This item is administrative in nature therefore I recommend deleting Item 2) from R3 Severe VSL. b. The first and third bullets of item 4) of R3 Severe VSL are administrative in nature and should be moved to the Lower VSL c. R4: SAR Attachment B - Reliability Standard Review Guidelines states that violation severity levels should be based on the following equivalent scores: Lower: More than 95% but less than 100% compliant Moderate: More than 85% but less than or equal to 95% compliant High: More than 70% but less than equal to 85% compliant Severe: 70% or less compliant I recommend revising the percentages of the violation severity levels to be consistent with the SAR.
Response	**Thank you for your comments.** **1. Requirements R1, R2, and R3 are not administrative; they are foundational. Without the fundamental development of a PSMP, an entity is unlikely to actually implement a PSMP that satisfies the reliability needs of the BES.** **2. The SDT concluded that Requirement R2 is redundant with Requirement R1, Part 1.4, and has deleted Requirement R2 (together with the associated Measure and VSL).** **3. The guidelines within the SAR have been superseded by subsequent revisions to the VSL Guidelines. The VSLs in the draft standard adhere to the latest VSL Guidelines and to the June 19, 2008 FERC order on VSLs in Docket No RR08-04-000.** **4. Part a – The VSL for Requirement R3 has been modified in consideration of your comments.** **Part b – These requirements are not administrative; they are foundational. Without compliance with these requirements, an entity does not have an effective performance-based PSMP, and may be detrimentally affecting reliability.** **Part c – The latest VSL Guidelines also provide examples of VSLs similar to those in the draft standard.**
Segment	1

Organization	Oncor Electric Delivery
Member	Michael T. Quinn
Comment	Oncor cast a negative ballot vote for the present version of the VRFs and VSLs for this Standard. The negative vote against is solely based on the addition of the VSL associated with Requirement R1 Part 1.5.
Response	**Thank you for your comments. The SDT has determined that the fundamental concerns of Requirement R1, Part 1.5 and the associated changes are addressed within the PSMP definition, and that Requirement R1, Part 1.5 is not necessary; therefore, it has been removed. Requirement R4 has also been re-drafted to address various related concerns noted within comments. The associated VSL has also been revised. Please see Supplementary Reference Document, Section 8 for a discussion of this.**
Segment	6
Organization	Seattle City Light
Member	Dennis Sismaet
Comment	The proposed Standard PRC-005-2 is an improvement over the previous draft in that it provides more consistency in maintenance and testing duration internals. Notwithstanding, two issues are of concern to Seattle City Light such that it is compelled to vote no: 1) the establishment of bookends for standard verification and 2) the implementation timelines for entities with systems where electro-mechanical relays still compose a significant number of components in their protection systems. 1. Bookends: Proposed Standard PRC-005-2 specifies long inspection and maintenance intervals, up to 12 years, which correspondingly exacerbates the so-called “bookend” issue. To demonstrate that interval-based requirements have been met, two dates are needed - bookends. Evidencing an initial date can be problematic for cases where the initial date would occur prior to the effective date of a standard. NERC has provided no guidance on this issue, and the Regions approach it differently. Some, such as Texas Regional Entity, require initial dates beginning on or after the effective date of a Standard. Compliance with intervals is assessed only once two dates are available that occur on or after a standard took effect. Other regions, such as Western Electricity Coordinating Council (WECC), require that entities evidence an initial date prior to the effective date of a standard. For WECC, compliance with intervals is assessed as soon as a standard takes effect. Such variation makes application of standards involving bookends uncertain, arbitrary, capricious, and in the case of WECC, possibly illegal. Proposed Standard PRC-005-2 will be another such standard. Indeed this Standard will involve by far the largest number of bookends of any NERC standard - many thousands for a typical entity. Furthermore, the long inspection and maintenance intervals

	introduced in the draft will require entities in WECC, for instance, to evidence initial bookend dates prior to the date original PRC-005-1 took effect. For the 12-year intervals for CTs and VTs in proposed Standard PRC-005-2, many initial dates will occur prior to the 2005 Federal Power Act that authorized Mandatory Reliability Standards and even reach back before the 2003 blackout that catalyzed the effort to pass the Federal Power Act. As a result, many entities in WECC maybe at risk of being found in violation of proposed Standard PRC-005-2 immediately upon its implementation. Seattle City Light requests that NERC address the bookends issue, either within proposed Standard PRC-005-2 or in a separate, concurrent document. 2. Legacy Systems: Many entities still have legacy protection systems that rely upon electro-mechanical relays. Effective testing approaches differ between electro-mechanical and digital relay systems. Thus, although the proposed standard rightly looks to the future of digital relays by specifying testing and maintenance focused on protection systems as a whole, the proposed implementation timelines create a level of hardship for those utilities with legacy systems. In example, auxiliary relay and trip coil testing may be essential to prove the correct operation of complex, multi-function digital protection systems. However, for legacy systems with single-function electro-mechanical components, the considerable documentation and operational testing needed to implement and track such testing is not necessarily proportional to the relative risk posed by the equipment to the bulk electric system. Performance testing of electro-mechanical systems, particularly regarding control circuits, will require extensive disconnection and reconnection of portions of the circuits. Such activities will likely cause far more problems on restoration-to-service than they will locate and correct. As such, to assist entities in their implementation efforts, we believe provision of alternatives are necessary, such as additional implementation time through phasing and/or through technical feasibility exceptions.
Response	**Thank you for your comments.** **1. This issue has been addressed by NERC in Compliance Application Notice CAN-008 "PRC-005 R2 Pre-June 18 Evidence".** **2. Please see Sections 8 and 15.3 of the Supplementary Reference Document for a discussion on this topic. FERC Order 693 directs that NERC establish requirements for the maintenance of the Protection System and control circuitry is a portion thereof. Therefore, requirements for the maintenance of the control circuitry are necessary and the SDT has developed those requirements in a fashion that affords entities with the opportunity to best meet those requirements.**
Segment	1,3, 3, 3
Organization	Southern Company Services, Inc., Alabama Power, Georgia Power, Mississippi Power
Member	Horace Stephen Williamson, Richard J. Mandes, Anthony L Wilson, Don Horsley

Comment	We disagree with the inclusion of the VSLs, VRFs, and time Horizons associated with the new Requirements 1.5 and 4.2
Response	**Thank you for your comments. The SDT has determined that the fundamental concerns of Requirement R1, Part 1.5 and the associated changes are addressed within the PSMP definition, and that Requirement R1, Part 1.5 is not necessary; therefore, it has been removed. Requirement R4 has also been re-drafted to address various related concerns noted within comments. The associated VSL has also been revised. Please see Supplementary Reference Document, Section 8 for a discussion of this.**
Segment	5
Organization	U.S. Bureau of Reclamation
Member	Martin Bauer P.E.
Comment	The VSL levels are not consistent with the true impact on reliability. Severe levels are assigned for failing to document rather than failing to maintain components. Documentation requirements that are not met should not be assigned a Severe level. The concept of penalizing an entity for failed components without regard to why they failed is unreasonable. The severely levels should be based on avoidable failures or failures that could have been detected if the entity had performed maintenance.
Response	**Thank you for your comments.** **VSLs depict the level to which an entity has failed to comply with the standard; VRFs reflect the risk to the BES. Escalations within the VSLs specifically address more egregious (severe) violations of the standard in accordance with the NERC VSL Guidelines.**

NERC
NORTH AMERICAN ELECTRIC RELIABILITY CORPORATION

Consideration of Comments on Initial Ballot — Protection System Maintenance and Testing (Project 2007-17)
Date of Initial Ballot: December 10 – 20, 2010

Summary Consideration: Many commenters opposed R1 part 1.5 and the associated text, and the SDT responded by removing this text. Most of these comments were duplicates of those submitted in response to the formal comment period; the SDT responses are duplicated as well. Please see the Summary Consideration for each of the posted questions within the Consideration of Comments.

If you feel that the drafting team overlooked your comments, please let us know immediately. Our goal is to give every comment serious consideration in this process. If you feel there has been an error or omission, you can contact the Vice President and Director of Standards, Gerry Adamski, at 609-452-8060 or at gerry.adamski@nerc.net. In addition, there is a NERC Reliability Standards Appeals Process.[1]

Voter	Entity	Segment	Vote	Comment
Rodney Phillips	Allegheny Power	1	Negative	Allegheny Power applauds the hard work that the Standards Draft Team has exhibited in producing a clear and enforceable standard that will increase the reliability of the Bulk Electric System. However, the addition of requirement 1.5 is such a significant change in scope from the last draft that a further review of the potential impact and any implementation concerns is required by AP and the industry in general before we can consider voting in-favor of this standard.
Response: **Thank you for your comments. The SDT has determined that the fundamental concerns of Requirement R1, Part 1.5 and the associated changes are addressed within the PSMP definition, and that Requirement R1, Part 1.5 is not necessary; therefore, it has been removed. Requirement R4 has also been re-drafted to address various related concerns noted within comments. The associated VSL has also been revised. Please see Supplementary Reference Document, Section 8 for a discussion of this.**				
Kirit S. Shah	Ameren Services	1	Negative	(1)We believe that R1.5 and R4.2 "Calibration tolerances or other equivalent parameters" requirements should be removed. Neither the Supplement nor the FAQ address the expectation for them. While we agree that tolerances are needed and used, they need not be specified as part of this standard. (2)
Response: **Thank you for your comments. The SDT has determined that the fundamental concerns of Requirement R1, Part 1.5 and the associated changes are addressed within the PSMP definition, and that Requirement R1, Part 1.5 is not necessary; therefore, it has been removed. Requirement R4 has also been re-drafted to address various related concerns noted within comments. The associated VSL has also been revised. Please see Supplementary Reference Document, Section 8 for a discussion of this.**				
Paul B. Johnson	American Electric Power	1	Negative	Restructured Tables: 1) Table 1.5 (Control Circuitry), row 4, indicates a maximum interval of 12 years for unmonitored control circuitry, yet other portions of control circuitry have a maximum interval of 6 years. AEP does not understand the rationale for the difference in intervals, when in most cases, one verifies the other. Also, unmonitored control circuitry is capitalized in row 4 such that it infers a defined term. 2) In the first row of table 1-4 on page 16, it is difficult to determine if it is a cell that wraps from the previous page or is a unique row. This is important

[1] The appeals process is in the Reliability Standards Development Procedure: http://www.nerc.com/files/RSDP_V6_1_12Mar07.pdf.

Voter	Entity	Segment	Vote	Comment
				because the Maximum Maintenance Intervals are different (i.e. 18 months vs 6 years). It is difficult to determine to which elements the 6 year Maximum Maintenance Interval applies. AEP suggests repeating the heading "Monitored Station dc supply (excluding UFLS and UVLS) with: Monitor and alarm for variations from defined levels (See Table 2):" for the bullet points on this page. VSLs, VRFs and Time Horizons: 3) The VSL table should be revised to remove the reference to the Standard Requirement 1.5 in the R1 "High" VSL. 4) All four levels of the VSL for R2 make reference to a "condition-based PSMP." However, nowhere in the standard is the term "condition-based" used in reference to defining ones PSMP. The VSL for R2 should be revised to remove reference to a condition-based PSMP; alternatively the Standard could be revised to include the term "condition-based" within the Standard Requirements and Table 1. 5) In multiple instances, Table 1 uses the phrase "No periodic maintenance specified" for the Maximum Maintenance Interval. Is this intended to imply that a component with the designated attributes is not required to have any periodic maintenance? If so, the wording should more clearly state "No periodic maintenance required" or perhaps "Maintain per manufacturers recommendations." Failure to clearly state the maintenance requirement for these components leaves room for interpretation on whether a Registered Entity has a maintenance and testing program for devices where the Standard has not specified a periodic maintenance interval and the manufacturer states that no maintenance is required. FAQ and Supplementary Reference: 6) With such a complex standard as this, the FAQ and Supplementary Reference documents do aid the Protection System owner in demystifying the requirements. But AEP holds strong doubt on how much weight the documents carry during audits. It would be better to include them as an appendix in the actual standard, but in a more compact version with the following modifications: a) Section 5 of the Supplementary Reference, refers to "condition-based" maintenance programs. However, nowhere in the standard is the term "condition-based" used in reference to defining ones PSMP. The Supplementary Reference should be revised to remove reference to a condition-based PSMP; alternatively the Standard could be revised to include the term "condition-based" within the Standard Requirements and Table 1.

Voter	Entity	Segment	Vote	Comment
				b) Section 15.7, page 26, appears to have a typographical error "...can all be used as the primary action is the maintenance activity..." c) Figure 2 is difficult to read. The figure is grainy and the colors representing the groups are similar enough that it is hard to distinguish between groups. 7) "Frequently-Asked Questions": With such a complex standard as this, the FAQ and Supplementary Reference documents do aid the Protection System owner in demystifying the requirements. But AEP holds strong doubt on how much weight the documents carry during audits. It would be better to include them as an appendix in the actual standard, but in a more compact version with the following modifications: a) The section "Terms Used in PRC-005-2" is blank and should be removed as it adds no value. b) Section I.1 and Section IV.3.G reference "condition-based" maintenance programs. However, nowhere in the standard is the term "condition-based" used in reference to defining ones PSMP. The FAQ should be revised to remove reference to a condition-based PSMP; alternatively the Standard could be revised to include the term "condition-based" within the Standard Requirements and Table 1. c) The second sentence to the response in Section I.1 appears to have a typographical error "... an entity needs to and perform ONLY time-based...". 8) General: a) Standards Requirement 1.5 and the reference to R1.5 in Requirement 4.2 should be removed. Specifying calibration tolerances for every protection system component type, while a seemingly good idea, represents a substantial change in the direction of the standard. It would be very onerous for companies to maintain a list of calibration tolerances for every protection system component type and show evidence of such at an audit. AEP believes entities need the flexibility to determine what acceptance criteria is warranted and need discretion to apply real-time engineering/technician judgment where appropriate. b) Three different types of maintenance programs (time-based, performance-based and condition-based) are referenced in the standard or VSLs, yet the time-based and condition-based programs are neither defined nor described. Certain terms defined within the definition section (such as Countable Event or Segment) only make sense knowing what those three programs entail. These programs should be described within the standard itself and not assume a knowledge of material in the Supplementary

Voter	Entity	Segment	Vote	Comment
				Reference or FAQ. c) "Protective relay" should be a defined term that lists relay function for applicability. There are numerous 'relays' used in protection and control schemes that could be lumped in and be erroneously included as part of a Protection System. For example, reclosing or synchronizing relays respond to voltage and hence could be viewed by an auditor as protective relays, but they in fact perform traditional control functions versus traditional protective functions.

Response: **Thank you for your comments.**

1. **The 6-year activities are all related to components with "moving parts", and the 12-year activities are related to the other portions of the control circuitry. The capitalized term has been corrected.**
2. **Table 1-4 has been modified in consideration of your comments.**
3. **The SDT has determined that the fundamental concerns of Requirement R1, Part 1.5 and the associated changes are addressed within the PSMP definition, and that Requirement R1, Part 1.5 is not necessary; therefore, it has been removed. Requirement R4 has also been re-drafted to address various related concerns noted within comments. The associated VSL has also been revised.**
4. **The SDT concluded that Requirement R2 is redundant with R1, Part 1.4, and has deleted R2 (together with the associated Measure and VSL).**
5. **If the indicated monitoring attributes are present, no "hands-on" periodic maintenance is required, as the monitoring of the component is providing a continuing indication of its functionality.**
6. **The discussion within the Supplementary Reference and FAQ are informative, not normative, and thus do not belong as part of the standard.**
   - **A. The Supplemental Reference Document discusses condition-based maintenance in a conceptual manner, as a generally-recognized term. The SDT did make some changes within the Supplemental Reference document to clarify the manner in which condition-based maintenance is discussed.**
   - **B. This clause has been corrected.**
   - **C. A higher-quality version of Figure 2 has been substituted.**
7. **The discussion within the Supplementary Reference and FAQ are informative, not normative, and thus do not belong as part of the standard.**

a) The SDT decided to eliminate the FAQ document and incorporate the FAQ's contents into the Supplementary Reference Document as appropriate. The SDT considered your comments during this activity.
b) The SDT decided to eliminate the FAQ document and incorporate the FAQ's contents into the Supplementary Reference Document as appropriate. The SDT considered your comments during this activity.
c) The SDT decided to eliminate the FAQ document and incorporate the FAQ's contents into the Supplementary Reference

Voter	Entity	Segment	Vote	Comment
Document as appropriate. The SDT considered your comments during this activity. **8. A) The SDT has determined that the fundamental concerns of Requirement R1, Part 1.5 and the associated changes are addressed within the PSMP definition, and that Requirement R1, Part 1.5 is not necessary; therefore, it has been removed. Requirement R4 has also been re-drafted to address various related concerns noted within comments. The associated VSL has also been revised. Please see Supplementary Reference Document, Section 8 for a discussion of this.** **B) The term, "condition-based" has been removed from the draft standard. The other terms are used, but are clear in the context in which they are used.** **C) "Protective relay" is defined by IEEE, and the SDT sees no need to either change the definition or to repeat the definition with PRC-005. Further, the applicability of generically-described protective relays is defined by the Applicability clause of PRC-005-2.**				
Jason Shaver	American Transmission Company, LLC	1	Negative	ATC recognizes the substantial efforts that the SDT has made on PRC-005 and appreciate the SDT's modifications to this Standard based on previous comments made. ATC looks forward to continuing to have a positive influence on this process via the comment process, ballots and interaction with the SDT. ATC was very close to an affirmative vote on this Standard prior to the unanticipated changes that appeared in this most recent posting. These changes introduce a significant negative impact from ATC's perspective. Therefore, ATC is recommending a negative ballot in the hope that our concerns regarding R 1.5 and R 4.2 and other clarifications will be included with the standard.
1. Response: Thank you for your comments. The SDT has determined that the fundamental concerns of Requirement R1, Part 1.5 and the associated changes are addressed within the PSMP definition, and that Requirement R1, Part 1.5 is not necessary; therefore, it has been removed. Requirement R4 has also been re-drafted to address various related concerns noted within comments. The associated VSL has also been revised. Please see Supplementary Reference Document, Section 8 for a discussion of this.				
John Bussman	Associated Electric Cooperative, Inc.	1	Negative	AECI want to thanks the team for the efforts being put forth by the drafting team. The table is much easier to follow and less confusing. AECI is voting negative because of the battery inspection intervals. 1. We have commented before about the 3 months being excessive and think it should be annually. However, with that being stated if you are going to use three months as the interval then that means inspections will have to be scheduled every 2 months to ensure the inspections happen every 3 months. Therefore AECI request that the battery inspection schedule be extended to every 4 months and then entities can schedule inspections to be performed every 3 months to ensure that the inspections are completed every 4 months.

Voter	Entity	Segment	Vote	Comment
				2. The same comment applies the the unmonitored communication circuits. Change the time interval to 4 months. Then scheduling can be every 3 months instead of every 2 months. 3. When you go to Table 1-4 there is confusion with the the DC for a UFLS or UVLS system. For the interval it states "When control circuits are verified" Then I go to Table 1-5 the second line that discusses trip coils for UFLS and UVLS the interval states "No periodic maintenance specified" Is this what was intended?
Response: **Thank you for your comments.** **1. The SDT believes that the 3-month interval is proper.** **2. The SDT believes that the 3-month interval is proper for unmonitored communications systems.** **3. The SDT intends that tripping of the interrupting device for UFLS/UVLS is not required, but that the other portions of the dc control circuitry still shall be maintained. See Section 15.3 of the Supplementary Reference Document**				
Joseph S. Stonecipher	Beaches Energy Services	1	Negative	1. UFLS and UVLS maintenance and testing is greatly expanded, e.g., we interpreted PRC-008/011 as being only the UFLS/UVLS equipment. The new PRC-005 sweeps in other protection system components, e.g., communications (probably not applicable), voltage and current sensing devices (e.g., instrument transformers), Station DC supply, control circuitry. What we see as a problem is that these components are all part of distribution system protection, so, these activities would not be covered by other BES protection system maintenance and testing. I'm sure we are testing batteries and the like, but, in many cases distribution circuits are such that it is very difficult, if not impossible, to test control circuitry to the trip coil of the breaker without causing an outage of the customers on that distribution circuit. There is no real reliability need for this either. Unlike Transmission and Generation Protection Systems which are needed to clear a fault and may only have one or two back-up systems, there are thousands and thousands of UFLS relays and if one fails to operate, it will not be noticeable to the event. It does make sense to test the relays themselves, in part, to ensure that the regionsl UFLS program is being met; but, to test the other protection system components is not worthwhile. Note that DC Supplies and most of the control circuitry of distribution line breakers are "tested" frequently by distribution circuits clearing faults such as animals, vegetation blow-ins, lightning, etc., on distribution circuits, reducing the value of testing to just about nill. However, this version is better than prior versions because it essentially requires the entity to determine it's own period of maintenance and testing for UFLS/UVLS for DC Supply and control circuitry. 2. Applicability, 4.2.1, should reflect the Y&W and Tri-State interpretation (Project 2009-17) of "transmission Protection System" and should state: "Protection Systems applied on, or designed to provide protection for a BES Facility and that

Voter	Entity	Segment	Vote	Comment
				trips a BES Facility." 3. Applicability, 4.2. - does not reflect the interpretation of Project 2009-10 that excludes non-electrical protection (e.g., sudden pressure relays) and auxiliary relays. Because the definition of Protection System (recently approved) does not clearly exclude "non-electrical" protection,the Applicability section should. For instance,, a vibration monitor, steam pressure, etc. protection of generators, sudden pressure protection of transformers, etc. should not be included in the standard. An alternative is to change the definition of Protection System to make sure it only includes electrical.
Response: **Thank you for your comments.** **1. For UFLS and UVLS, the maintenance activities related to station dc supply and control circuitry are somewhat constrained relative to similar activities for Protection Systems in general. Regardless, without proper functioning of these component types, UFLS and UVLS will not respond as expected, and will therefore degrade BES system reliability, particularly during the stressed system conditions for which UFLS and UVLS are installed. Relative to control circuitry, Table 1-5 specifically excludes UFLS and UVLS from maintenance activities related to the interrupting device trip coil.** **2. This interpretation is not yet approved by FERC. When this interpretation is approved, the SDT will incorporate it within PRC-005-2. However, the SDT has made changes to Applicability 4.2.1. in consideration of your comment.** **3. The recently-balloted revision of the definition of Protection System, which has been approved by the NERC Board of Trustees and will soon be filed with FERC for approval, clearly includes only protective relays that respond to electrical quantities. As for auxiliary relays, the interpretation to which you refer states that they are not explicitly included, but are included to the degree that an entity's Protection System control circuitry addresses them(which has been identified as a reliability gap), and are being added to PRC-005-2 to resolve the gap.**				
Donald S. Watkins	Bonneville Power Administration	1	Negative	Please see BPA's formal comments submitted on 12/16/10. Our concerns have not been adequately addressed.
Response: **Thank you for your comments. Please see our responses to your comments from the formal comment period.**				
Paul Rocha	CenterPoint Energy	1	Negative	1) CenterPoint Energy cannot support this proposed Standard. Any standard that requires a 35 page Supplementary Reference document and a 37 page FAQ - Practical Compliance and Implementation document is much too prescriptive and complex. 2) CenterPoint Energy is very concerned that a large increase in the amount of documentation will be required in order to demonstrate compliance - with no resulting reliability benefit. CenterPoint Energy believes this Standard could actually result in decreasing system reliability, as the Standard proposes excessive maintenance requirements. The following is included in the

Voter	Entity	Segment	Vote	Comment
				Supplementary Reference document (page 8): "Excessive maintenance can actually decrease the reliability of the component or system. It is not unusual to cause failure of a component by removing it from service and restoring it." System reliability can be even further reduced by the number of transmission line and autotransformer outages required to perform maintenance. 3) In addition, the following is included in the FAQ - Practical Compliance and Implementation document: "PRC-005-2 assumes that thorough commission testing was performed prior to a protection system being placed in service. PRC-005-2 requires performance of maintenance activities that are deemed necessary to detect and correct plausible age and service related degradation of components such that a properly built and commission tested Protection System will continue to function as designed over its service life." CenterPoint Energy believes some proposed requirements, such as wire checking a relay panel, do not conform to this statement. CenterPoint Energy's experience has been that panel wiring does not degrade with age and service and that problems with panel wiring, after thorough commissioning, is not a systemic issue.
Response: **Thank you for your comments.** **1. The SDT decided to eliminate the FAQ document and incorporate the FAQ's contents into the Supplementary Reference Document as appropriate.** **2. FERC Order 693 directed that NERC establish maximum maintenance intervals. The documentation required should not expand dramatically from the documentation currently required to demonstrate compliance. An entity may minimize hands-on maintenance by utilizing monitoring to extend the intervals.** **3. The standard does not require "wire-checking," but instead generically specifies "verification" – however an entity chooses to do so.**				
Jack Stamper	Clark Public Utilities	1	Negative	My no vote reflects my concern regarding the testing of Station DC Supply (Table 1-4) and Alarming Paths (Table 2). The SDT has provided much clarity to this standard in the testing requirements for relays, communication systems, voltage and current sensing devices, and control circuitry. 1. Table 1-4 is still confusing. There are five separate categories of unmonitored Station DC Supply testing requirements. It is unclear whether these categories are to be combined or if they are mutually exclusive. The first category applies to "Any unmonitored station dc supply not having the monitoring attributes of a category below" and appears to be a set of inspection and verification

Voter	Entity	Segment	Vote	Comment
				requirements that are generally applicable to all unmonitored Station DC Supplies. The next four categories are applicable to Station DC Supply with specified types of batteries. If a station has unmonitored vented lead-acid batteries, are the batteries ONLY subject to the testing requirements for VLA batteries? OR would these batteries ALSO be subject to the requirements of the first category? It appears that the intent is for all Station DC Supply not having any monitoring attributes to be tested and maintained in accordance with the first category as well as the second through fifth category that is applicable. If this is the case, the SDT should consider revising the Component Attributes in Table 1-4 for the first category of Unmonitored Station DC Supplies to the following: Any unmonitored station dc supply not having the monitoring attributes of a category below. (excluding UFLS and UVLS). Station DC Supply devices applicable under these Table 1-4 general requirements will have additional testing requirements as described below for non-battery systems, VRLA battery systems, VLA battery systems, and Ni-Cad battery systems. 2. Do monitored batteries need to have all of the monitoring attributes listed or does having some of the monitoring attributes qualify a device as "Monitored?" The frequently asked questions examples on pages 30 - 32 seem to indicate that if only some of the items are monitored, the Station DC Supply is considered “Monitored” as long as other items are tested or verified. If this is the case, the SDT should consider revising the Component Attributes in Table 1-4 for the first category of Monitored Station DC Supplies to the following: Monitored Station dc supply (excluding UFLS and UVLS) with: Monitor and alarm for variations from defined levels (See Table 2): o Station dc supply voltage (voltage of battery charger) o State of charge of the individual battery cell/units o Battery continuity of station battery o Cell-to-cell (if available) and battery terminal resistance. Monitored Station dc supply will have one or more of the above listed conditions monitored or alarmed with the remainder of the conditions subject to inspection and verification activities. 3. In Table 2, the first Component Attribute for Alarm Paths contains the requirement that “Alarms are automatically reported within 24 hours of DETECTION to a location where corrective action can be taken.” I believe the term “automatically” should be removed. This term implies an automated process without human intervention. However, many facilities (i.e. generator

Voter	Entity	Segment	Vote	Comment
				protection devices or manned substations) have protective devices that while not being subject to continuous monitoring, are visually inspected in daily or twice daily inspections. If protection devices have internal self-diagnostics that provide an alarm (i.e. failure indication on faceplate, relay interrogation, or LED failure indicator) and these devices are inspected one or more times per day, failures or malfunctions would be reported within the 24 hour DETECTION time. This appears to be within the intent of the standard which is to make sure that failed protective devices do not remain in failure longer than 24 hours without notification to a location where corrective action can be taken.
Response: **Thank you for your comments.** **1. Table 1-4 has been modified in consideration of your comments.** **2. Table 1-4 has been modified in consideration of your comments, and has been revised to remove "state of charge".** **3. "Automatically" has been removed from Table 2 in consideration of your comment.**				
Danny McDaniel	Cleco Power LLC	1	Negative	Cleco applies its' UFLS on the distribution grid with each UF relay individually tripping a relatively low value of load thru breakers and reclosers. Since our program is implemented via a large number of individual components, breakers, reclosers, and individual batteries, the failure of any one component will have a minimal impact on the effectiveness of the overall UFLS program within our region. Therefore, the verification of sensing devices, dc supply voltages, and the paths of the control circuit and trip circuits on the UFLS systems implemented on the distribution grid is unnecessary.
Response: **Thank you for your comments. The SDT disagrees; the sensing devices, control circuitry and dc supply related to UFLS has an effect on the performance of the UFLS. The SDT has, however, respected the overall impact on the control circuitry of individual UFLS on BES reliability by requiring that UFLS be subjected to a subset of the overall sensing devices, control circuitry and dc supply maintenance activities.**				
Paul Morland	Colorado Springs Utilities	1	Negative	CSU offers the following comments: 1. The document refers to the "BES" or "Bulk Electrical System" yet we have been unable to get a clear definition as to what that is. 2. 1.5 Because some calibration tolerances, such as communications schemes, change with the weather conditions, establishing tolerances could be difficult if the weather conditions are not factored into the tables. 3. 4.2.5.4 There needs to be a clear definition for "Station Service Transformers". 4. The reference to testing tolerances implies that test equipment must be calibrated to some standard, which this document does not discuss, and leaves a very wide interpretation for what this standard is, or the required calibration is required. 5. Table 1-3 Voltage and current devices may be connected to a meter and compared to a reference source to verify proper operation of the CT or PT. This seems to be at error in thinking that only microprocessor relays can be

Voter	Entity	Segment	Vote	Comment
				used to verify CT or PT's. Also in many PT's there is more than one winding and tap, or which this standard seems to imply that only one needs to be monitored to verify the correct function of all of the windings and taps. If I were to follow this logic, I only need to monitor one winding of a dual core CT.
Response: **Thank you for your comments.** **1. Bulk Electric System is defined by NERC, and further defined by the Regional Entities. Please refer to these definitions.** **2. The SDT has determined that the fundamental concerns of Requirement R1, Part 1.5 and the associated changes are addressed within the PSMP definition, and that Requirement R1, Part 1.5 is not necessary; therefore, it has been removed. Requirement R4 has also been re-drafted to address various related concerns noted within comments. The associated VSL has also been revised. Please see Supplementary Reference Document, Section 8 for a discussion of this.** **3. Station Service transformer provide power to the auxiliary busses of generating plants. Some alternative names for these devices are "unit auxiliary transformers", "station auxiliary transformers", The SDT believes that these devices are commonly understood throughout industry and therefore require no definition.** **4. The SDT has determined that the fundamental concerns of Requirement R1, Part 1.5 and the associated changes are addressed within the PSMP definition, and that Requirement R1, Part 1.5 is not necessary; therefore, it has been removed. Requirement R4 has also been re-drafted to address various related concerns noted within comments. The associated VSL has also been revised. Please see Supplementary Reference Document, Section 8 for a discussion of this.** **5. Table 1-3 does not prescribe how the voltage and current sensing device inputs to the protective relays shall be verified, just that they be verified according to the established intervals. Please see Section 15.2 of the Supplementary Reference Document for a discussion on this topic.**				
Christopher L de Graffenried	Consolidated Edison Co. of New York	1	Negative	PRC-005 Initial Ballot Comments: 1. The Tables - The wording "Component Type" is not necessary in each title. Just the equipment category should be listed--what is now shown as "Component Type - Protective Relay", should be Protective Relay. However, Protective Relay is too general a category. Electromechanical relays, solid state relays, and microprocessor based relays should have their own separate tables. So instead of reading Protective Relay in the title, it should read Electromechanical Relays, etc. This will lengthen the standard, but will simplify reading and referring to the tables, and eliminate confusion when looking for information. The "Note" included in the heading is also not necessary. "Attributes" is also not necessary in the column heading, "Component" suffices. 2. Other Comments - In general, the standard is overly prescriptive and complex. It should not be necessary for a standard at this level to be as detailed and complex as this standard is. Entities working with manufacturers, and knowledge gained from experience can develop adequate maintenance and testing programs. 3. Why are "Relays that respond to non-electrical inputs or impulses (such

Voter	Entity	Segment	Vote	Comment
				as, but not limited to, vibration, pressure, seismic, thermal or gas accumulation)…" not included? The output contacts from these devices are oftentimes connected in tripping or control circuits to isolate problem equipment. 4. Due to the critical nature of the trip coil, it must be maintained more frequently if it is not monitored. Trip coils are also considered in the standard as being part of the control circuitry. Table 1-5 has a row labeled "Unmonitored Control circuitry associated with protective functions", which would include trip coils, has a "Maximum Maintenance Interval" of "12 Calendar Years". Any control circuit could fail at any time, but an unmonitored control circuit could fail, and remain undetected for years with the times specified in the Table (it might only be 6 years if I understand that as being the trip test interval specified in the table). Regardless, if a breaker is unable to trip because of control circuit failure, then the system must be operated in real time assuming that that breaker will not trip for a fault or an event, and backup facilities would be called upon to operate. Thus, for a line fault with a "stuck" breaker (a breaker unable to trip), instead of one line tripping, you might have many more lines deloaded or tripped because of a bus having to be cleared because of a breaker failure initiation. The bulk electric system would have to be operated to handle this contingency. 5. In reference to the FAQ document, Section 5 on Station dc Supply, Question K, clarification is needed with respect to dc supplies for communication within the substation. For example, if the communication systems were run off a separate battery in separate area in a substation, would the standard apply to these batteries or not? 6. To define terms only as they are used in PRC-005-2 is inviting confusion. Although they may be unique to PRC-005-2, some or all of them may be used in future standards, some already may be used in existing standards, and may or may not be deliberately defined. Consistency must be maintained, not only for administrative purposes, but for effective technical communications as well. 7. What is the definition of "Maintenance" as used in the table column "Maximum Maintenance Interval"? Maintenance can range from cleaning a relay cover to a full calibration of a relay. 8. A control circuit is not a component, it is made up of components. 9. Sub-requirement 1.5 needs to be clarified. It is not clear what "Identify calibration tolerances or other equivalent parameters…" means, and may be subject to different interpretations by entities and compliance

Voter	Entity	Segment	Vote	Comment
				enforcement personnel. 10. In the Implementation plan for Requirement R1, recommend changing "six" to fifteen. This change would restore the 3-month time difference that existed in the previous draft, between the durations of the implementation periods for jurisdictions that do and do not require regulatory approval. It will ensure equity for those entities located in jurisdictions that do not require regulatory approval, as is the case in Ontario. 11. The 'box' for "Monitored Station dc supply..." in Table 1-4 is not clear. It seems to continue to the next page to a new box. There are multiple activities without clear delineation. 12. Regarding station service transformers, Item 4.2.5.5 under Applicability should be deleted. The purpose of this standard is to protect the BES by clearing generator, generator bus faults (or other electrical anomalies associated with the generator) from the BES. Having this standard apply to generator station service transformers, that have no direct connection to the BES, does meet this criteria. The FAQs (III.2.A) discuss how the loss of a station service transformer could cause the loss of a generating unit, but this is not the purpose of PRC-005. Using this logic than any system or device in the power plant that could cause a loss of generation should also be included. This is beyond the scope of the NERC standards.

Response: **Thank you for your comments.**

1. The SDT believes that the table headings are appropriate as reflected in the draft standard.

2. The intervals and activities specified are believed by the SDT to be technically effective, in a fashion that may be consistently monitored for compliance. Further, FERC Order 693 directs NERC to establish maximum allowable intervals, which implies that minimum activities also need to be prescribed. If an entities' experience is that components require less-frequent maintenance, a performance-based program in accordance with Requirement R3 and Attachment A is an option.

3. The SDT concentrated their efforts on protective relays which use the entire group of component types within the Protection System definition. Also, there is currently no technical basis for the maintenance of the devices which respond to non-electrical quantities on which to base mandatory standards related either to activities or intervals. Absent such a technical basis, we are currently unable to establish mandatory requirements, but may do so in the future if such a technical basis becomes available.

4. According to Table 1-5, trip coils of interrupting devices must be verified to operate every 6 years, rather than the 12-year interval. You can maintain these devices more frequently if you desire.

5. With respect to dc supply associated only with communication systems, we prescribe, within Table 1-2, that the communications system must be verified as functional every 3 months, unless the functionality is verified by monitoring. The specific station dc supply requirements (Table 1-4) do not apply to the dc supply associated only with communications systems. The SDT decided to

Voter	Entity	Segment	Vote	Comment
eliminate the FAQ document and incorporate the FAQ's contents into the Supplementary Reference Document as appropriate. The SDT considered your comments during this activity. **6. The SDT has proposed these terms for use only within PRC-005-2 because we are concerned that other uses of these terms, either now or in the future, may not be consistent with the terms used here. They are defined only for clarify within this standard. The SDT will confirm with NERC staff that this approach is acceptable.** **7. As used in the "Maximum Maintenance Interval" column title of the table, maintenance refers to whatever activities are specified in the Activities column. The term is capitalized in the column title in conformance with normal editorial practice as a title, rather than as a definition.** **8. For purposes of this standard, the control circuit IS defined as one component type..** **9. The SDT has determined that the fundamental concerns of Requirement R1, Part 1.5 and the associated changes are addressed within the PSMP definition, and that Requirement R1, Part 1.5 is not necessary; therefore, it has been removed. Requirement R4 has also been re-drafted to address various related concerns noted within comments. The associated VSL has also been revised. Please see Supplementary Reference Document, Section 8 for a discussion of this.** **10. In consideration of your comment, "six" has been modified to "twelve" in the Implementation Plan for Requirement R1, making it consistent with the remainder of the Implementation Plan.** **11. Table 1-4 has been further modified for clarity.** **12. In response to many comments, including yours, the SDT has removed 4.2.5.5 from the Applicability of the standard.**				
Robert W. Roddy	Dairyland Power Coop.	1	Negative	In Table 1-5 it is unclear which devices the Maximum Maintenance Intervals would be held to, such as trip coils of circuit breakers and coils of electromechanical trip or auxiliary relays whose continuity and energization are monitored and alarmed.
Response: **Thank you for your comments. Trip coils of circuit breakers have a 6-year interval for physical operation. Coils of lockout and auxiliary relays also have a 6-year interval for physical operation. Control circuitry whose continuity and energization or ability to operate are monitored and alarmed require no hands-on maintenance.**				
John K Loftis	Dominion Virginia Power	1	Negative	Dominion is opposed to this version because Requirement R1.5 is overly prescriptive, requiring an extraordinary level of documentation, with little anticipated improvement in reliability.
Response: **Thank you for your comments. The SDT has determined that the fundamental concerns of Requirement R1, Part 1.5 and the associated changes are addressed within the PSMP definition, and that Requirement R1, Part 1.5 is not necessary; therefore, it has been removed. Requirement R4 has also been re-drafted to address various related concerns noted within comments. The associated VSL has also been revised. Please see Supplementary Reference Document, Section 8 for a discussion of this.**				

Voter	Entity	Segment	Vote	Comment
George R. Bartlett	Entergy Corporation	1	Negative	The restructured tables are generally much clearer and the SDT is to be commended on their efforts. 1. However, we believe the Alarming Point Table needs additional clarification with regard to the Maximum Maintenance Interval. If an "alarm producing device" is considered to be a device such as an SCADA RTU, individual entity intervals for such a device would differ, and there isn't necessarily a maximum interval established as there is for Protection System components. Also, if an entity's alarm producing device maintenance is performed in sections and triggered by segment or component maintenance, there would essentially be multiple maximum intervals for the alarm producing device of that entity. On that basis, we suggest the interval verbiage be revised to "When alarm producing device or system is verified, or by sections as per the monitored component/protection system specified maximum interval as applicable". Alternately, if the intention is to establish maximum intervals as simply being no longer than the individual component maintenance intervals as we suggest for inclusion above, then the verbiage should be revised to "When alarm producing component/protection system segment is verified". In either case, are we to interpret monitored components with attributes which allow for no periodic maintenance specified as not requiring periodic alarm verification? 2. R1.5 calls for "identification of calibration tolerances or equivalent parameters..." whereas the associated VSL references "failure to establish calibration criteria...." and is listed as high. If R1.5 is to be included in this standard, then we suggest the severity level of a failure to simply "identify" or document such calibration tolerances would be analogous to the severity level(s) of a "failure to specify one" or the severity level should be consistent with the other elements of R1. Both cases appear to be more of a documentation issue as opposed to a failure to implement. Shouldn't a failure to implement any necessary calibration tolerance be accounted for in R4? R1.5 calls for "identification of calibration tolerances or equivalent parameters for each Protection System Component Type....". We believe the Supplementary Reference document should provide additional information and examples of calibration tolerances or equivalent parameters which would be expected for the various component types. Especially for any "equivalent" parameters which would be required for compliance for a component type besides protective relays. Adding Requirement 1.5 is a significant revision and raises questions as to how broadly an accuracy or equivalent parameter requirement and associated

Voter	Entity	Segment	Vote	Comment
				documentation would need to be addressed by entities and/or will be measured for compliance. Discussion on this new requirement does not seem to be addressed anywhere in the FAQ or Supplementary Reference documents. Additionally, to the best of our knowledge, the need for such a requirement was not brought up as a concern or comment on the prior draft version of this standard, and in the context of a requirement need, we don't believe it has been attributed to or actually poses any significant reliability risk. We do not believe this requirement is justified.
Response: **Thank you for your comments.** **1. The Maximum Maintenance Interval column entry in Table 2 has been revised to state, "When alarm producing Protection System component is verified" to clarify this.** **2. The SDT has determined that the fundamental concerns of Requirement R1, Part 1.5 and the associated changes are addressed within the PSMP definition, and that Requirement R1, Part 1.5 is not necessary; therefore, it has been removed. Requirement R4 has also been re-drafted to address various related concerns noted within comments. The associated VSL has also been revised. Please see Supplementary Reference Document, Section 8 for a discussion of this.**				
Robert Martinko	FirstEnergy Energy Delivery	1	Negative	Please see FirstEnergy's comments submitted separately through the comment period posting.
Response: **Thank you for your comments.** **Please see our responses to your comments from the formal comment period.**				
Gordon Pietsch	Great River Energy	1	Negative	1. We believe that requiring an entity to identify calibration tolerances in their PSMP does not add a material benefit and does not contribute to increased reliability. In addition we believe that R1.5 should be rewritten to state that a Relay test report should show when a Relay fell out of tolerance. R4.2 should be rewritten to state that if a test report does show that a Relay was out of tolerance it should be required to show that resolution was initiated. 2. The Activities section of Table 1.3 should be revised to include that the signals do not have to come from energized voltage or current sensing devices. The current or voltage signals can come from a test set. Note: It may be difficult to energize CTs or VTs for large capacitor banks, reactors, or generating units.
Response: **Thank you for your comments.** **1. The SDT has determined that the fundamental concerns of Requirement R1, Part 1.5 and the associated changes are addressed within the PSMP definition, and that Requirement R1, Part 1.5 is not necessary; therefore, it has been removed. Requirement R4 has also been re-drafted to address various related concerns noted within comments. The associated VSL has also been revised. Please see Supplementary Reference Document, Section 8 for a discussion of this.**				

Voter	Entity	Segment	Vote	Comment
2. Table 1-3 has been modified in consideration of your comments.				
Ajay Garg	Hydro One Networks, Inc.	1	Negative	Hydro One is casting a negative vote with the following comments: 1. The added requirement R1, Part 1.5 is vague and needs clarification. It is not clear what "Identify calibration tolerances or other equivalent parameters" means and as written will be subject to different interpretations by entities and compliance enforcement personnel. The addition of this new part of Requirement R1 that requires the Owners to "identify calibration tolerances or other equivalent parameters for each Protection System component type" is onerous and contributes little to the reliability of the BES. 2. Changes introduced to the Implementation Plan since the last posting are not consistent with respect to jurisdictions where no regulatory approval is required. The previously posted implementation for Requirement R1 required entities to be 100% compliant on the first day of the first calendar quarter three months following applicable regulatory approvals, or in those jurisdictions where no regulatory approval is required, on the first day of the first calendar quarter six months following Board of Trustees adoption. The amended implementation plan changed the three-month time to twelve months in jurisdictions with regulatory approval required but left the same six-month time for the others. For consistency, the six months timeframe should be changed to fifteen months.
Response: **Thank you for your comments.** **1. The SDT has determined that the fundamental concerns of Requirement R1, Part 1.5 and the associated changes are addressed within the PSMP definition, and that Requirement R1, Part 1.5 is not necessary; therefore, it has been removed. Requirement R4 has also been re-drafted to address various related concerns noted within comments. The associated VSL has also been revised. Please see Supplementary Reference Document, Section 8 for a discussion of this.** **2. In consideration of your comment, "six" has been modified to "twelve" in the Implementation Plan for Requirement R1, making it consistent with the remainder of the Implementation Plan.**				
Michael Moltane	International Transmission Company Holdings Corp	1	Negative	1. ITC votes "Negative" for the following reasons: Our negative ballot is based on our objection to the 6 year test interval for auxiliary relays. We believe our present maintenance period for auxiliary relays of 10 years is adequate. 2. We also object to the requirement to verify acceptable levels of current values are received by the protective relays. We believe our present current transformer testing practice adequately insures acceptable levels of current are received by the relays and have requested that this procedure be approved. Detailed comments are included with our

Voter	Entity	Segment	Vote	Comment
				responses to the 5 questions in the Comment Form associated with this proposed Standard revision.
Response: **Thank you for your comments.** **1. The SDT believes that the appropriate interval for devices such as aux or lockout relays remains at 6 years, as these devices contain "moving parts" which must be periodically exercised to remain reliable.** **2. Please see our response in the Comment Form.**				
Stan T. Rzad	Keys Energy Services	1	Negative	1. UFLS and UVLS maintenance and testing is greatly expanded, e.g., we interpreted PRC-008/011 as being only the UFLS/UVLS equipment. The new PRC-005 sweeps in other protection system components, e.g., communications (probably not applicable), voltage and current sensing devices (e.g., instrument transformers), Station DC supply, control circuitry. What's key about this is that these components are all part of distribution system protection, so, these activities would not be covered by other BES protection system maintenance and testing. I'm sure we are testing batteries and the like, but, we are probably not testing battery chargers and control circuity, and, in many cases distribution circuits are such that it is very difficult, if not impossible, to test control circuitry to the trip coil of the breaker without causing an outage of the customers on that distribution circuit. There is no real reliability need for this either. Unlike Transmission and Generation Protection Systems which are needed to clear a fault and may only have one or two back-up systems, there are thousands and thousands of UFLS relays and if one fails to operate, it will not be noticeable to the event. It does make sense to test the relays themselves in part to ensure that the regio0nsl UFLS program is being met, but, to test the other protection system components is not worthwhile. Note that DC Supplies and most of the control circuitry of distribution lines are "tested" frequently by distribution circuits clearing faults such as animals, vegetation blow-ins, lightning, etc., on distribution circuits, reducing the value of testing to just about null. However, this version is better than prior versions because it essentially requires the entity to determine it's own period of maintenance and testing for UFLS/UVLS for DC Supply and control circuitry. 2. Applicability, 4.2.1, should reflect the Y&W and Tri-State interpretation (Project 2009-17) of "transmission Protection System" and should state: "Protection Systems applied on, or designed to provide protection for a BES Facility and that trips a BES Facility" 3. Applicability, 4.2. - does not reflect the interpretation of Project 20009-10

Voter	Entity	Segment	Vote	Comment
				that excludes non-electrical protection (e.g., sudden pressure relays) and auxiliary relays. Because the definition of Protection System (recently approved) does not clearly exclude "non-electrical" protection,the Applicability section should. For instance,, a vibration monitor, steam pressure, etc. protection of generators, sudden pressure protection of transformers, etc. should not be included in the standard. An alternative is to change the definition of Protection System to make sure it only includes electrical 4. The VRF of R1 should be Low since the attached tables are essentially the PSMP.
Response: **Thank you for your comments.** **1. For UFLS and UVLS, the maintenance activities related to station dc supply and control circuitry are somewhat constrained relative to similar activities for Protection Systems in general. Regardless, without proper functioning of these component types, UFLS and UVLS will not respond as expected, and will therefore degrade BES system reliability, particularly during the stressed system conditions for which UFLS and UVLS are installed. Relative to control circuitry, Table 1-5 specifically excludes UFLS and UVLS from maintenance activities related to the interrupting device trip coil.** **2. This interpretation is not yet approved by FERC. When this interpretation is approved, the SDT will incorporate it within PRC-005-2. However, the SDT has made changes to 4.2.1 in consideration of your comment.** **3. The recently-balloted revision of the definition of Protection System, which has been approved by the NERC Board of Trustees and will soon be filed with FERC for approval, clearly includes only protective relays that respond to electrical quantities. As for auxiliary relays, the interpretation to which you refer states that they are not explicitly included, but are included to the degree that an entity's Protection System control circuitry addresses them(which has been identified as a reliability gap), and are being added to PRC-005-2 to resolve the gap.** **4. The SDT disagrees; the Tables establish the intervals and activities, and Requirement R1 addresses the establishment of an entity's individual PSMP.**				
Walt Gill	Lake Worth Utilities	1	Negative	1. UFLS and UVLS maintenance and testing is greatly expanded, e.g., we interpreted PRC-008/011 as being only the UFLS/UVLS equipment. The new PRC-005 sweeps in other protection system components, e.g., communications (probably not applicable), voltage and current sensing devices (e.g., instrument transformers), Station DC supply, control circuitry. What's key about this is that these components are all part of distribution system protection, so, these activities would not be covered by other BES protection system maintenance and testing. I'm sure we are testing batteries and the like, but, we are probably not testing battery chargers and control circuity, and, in many cases distribution circuits are such that it is very difficult, if not impossible, to test control circuitry to the trip coil of the breaker without causing an outage of the customers on

Voter	Entity	Segment	Vote	Comment
				that distribution circuit. There is no real reliability need for this either. Unlike Transmission and Generation Protection Systems which are needed to clear a fault and may only have one or two back-up systems, there are thousands and thousands of UFLS relays and if one fails to operate, it will not be noticeable to the event. It does make sense to test the relays themselves in part to ensure that the regionsl UFLS program is being met, but, to test the other protection system components is not worthwhile. Note that DC Supplies and most of the control circuitry of distribution lines are "tested" frequently by distribution circuits clearing faults such as animals, vegetation blow-ins, lightning, etc., on distribution circuits, reducing the value of testing to just about null. However, this version is better than prior versions because it essentially requires the entity to determine it's own period of maintenance and testing for UFLS/UVLS for DC Supply and control circuitry. 2. Applicability, 4.2.1, should reflect the Y&W and Tri-State interpretation (Project 2009-17) of "transmission Protection System" and should state: "Protection Systems applied on, or designed to provide protection for a BES Facility and that trips a BES Facility" 3. Applicability, 4.2. - does not reflect the interpretation of Project 20009-10 that excludes non-electrical protection (e.g., sudden pressure relays) and auxiliary relays. Because the definition of Protection System (recently approved) does not clearly exclude "non-electrical" protection,the Applicability section should. For instance,, a vibration monitor, steam pressure, etc. protection of generators, sudden pressure protection of transformers, etc. should not be included in the standard. An alternative is to change the definition of Protection System to make sure it only includes electrical 4. The VRF of R1 should be Low since the attached tables are essentially the PSMP. 5. Table 1-4 requires a comparison of measured battery internal ohmic value to battery baseline. Since battery manufacturers do not provide this value, it is unclear what the “baseline” values ought to be if an entity recently began performing this test (assuming it’s several years after the commissioning of the battery.) Would it be acceptable for an entity to establish baseline values based on statistical analysis of multiple test results specific to a given battery manufacturer and design? o Small entities with only one or two BES substations may not have enough components to take advantage of the expanded maintenance intervals afforded by a performance-based maintenance program. Aggregating

Voter	Entity	Segment	Vote	Comment
				these components across different entities doesn't seem too logical considering the variations at the sub-component level (wire gauge, installation conditions, etc.) 6. Trip circuits are interconnected to perform various functions. Testing a trip path may involve disabling other features (i.e. breaker failure or reclosing) not directly a part of the test being performed. Temporary modifications made for testing introduce a chance to unknowingly leave functions disabled, contacts shorted, jumpers lifted, etc. after testing has been completed. Trip coils and cable runs from panels to breaker can be made to meet the requirements for monitored components. The only portions of the circuitry where this may not be the case is in the inter and intra-panel wiring. Because such portions of the circuitry have no moving parts and are located inside a control house, the exposure is negligible and should not be covered by the requirements. Entities will be at increased compliance risk as they struggle to properly document the testing of all parallel tripping paths.

Response: **Thank you for your comments.**

1. **For UFLS and UVLS, the maintenance activities related to station dc supply and control circuitry are somewhat constrained relative to similar activities for Protection Systems in general. Regardless, without proper functioning of these component types, UFLS and UVLS will not respond as expected, and will therefore degrade BES system reliability, particularly during the stressed system conditions for which UFLS and UVLS are installed. Relative to control circuitry, Table 1-5 specifically excludes UFLS and UVLS from maintenance activities related to the interrupting device trip coil.**
2. **This interpretation is not yet approved by FERC. When this interpretation is approved, the SDT will incorporate it within PRC-005-2. However, the SDT has made changes to Applicability 4.2.1 in consideration to your comment.**
3. **The recently-balloted revision of the definition of Protection System, which has been approved by the NERC Board of Trustees and will soon be filed with FERC for approval, clearly includes only protective relays that respond to electrical quantities. As for auxiliary relays, the interpretation to which you refer states that they are not explicitly included, but are included to the degree that an entity's Protection System control circuitry addresses them(which has been identified as a reliability gap), and are being added to PRC-005-2 to resolve the gap.**
4. **The SDT disagrees; the Tables establish the intervals and activities, and Requirement R1 addresses the establishment of an entity's individual PSMP.**
5. **Typical baseline values for various types of lead-acid batteries can be obtained from the test equipment manufacturer, perhaps the battery vendor, and perhaps other sources for batteries that are already in service. For new batteries, the initial battery baseline ohmic values should be measured upon installation and used for trending.**
6. **The requirement relative to control circuitry does not explicitly require trip or functional testing of the entire path; it requires that entities verify all paths without specifying the method of doing so. Please see Section 15.5 of the Supplementary Reference Document for detailed discussion.**

Voter	Entity	Segment	Vote	Comment
Larry E Watt	Lakeland Electric	1	Negative	The major reasons are that: 1. UFLS and UVLS maintenance and testing is greatly expanded, e.g., we interpreted PRC-008/011 as being only the UFLS/UVLS equipment. The new PRC-005 sweeps in other protection system components, e.g., communications (probably not applicable), voltage and current sensing devices (e.g., instrument transformers), Station DC supply, control circuitry. What's key about this is that these components are all part of distribution system protection, so, these activities would not be covered by other BES protection system maintenance and testing. I'm sure we are testing batteries and the like, but, we are probably not testing battery chargers and control circuity, and, in many cases distribution circuits are such that it is very difficult, if not impossible, to test control circuitry to the trip coil of the breaker without causing an outage of the customers on that distribution circuit. There is no real reliability need for this either. Unlike Transmission and Generation Protection Systems which are needed to clear a fault and may only have one or two back-up systems, there are thousands and thousands of UFLS relays and if one fails to operate, it will not be noticeable to the event. It does make sense to test the relays themselves in part to ensure that the regio0nsl UFLS program is being met, but, to test the other protection system components is not worthwhile. Note that DC Supplies and most of the control circuitry of distribution lines are "tested" frequently by distribution circuits clearing faults such as animals, vegetation blow-ins, lightning, etc., on distribution circuits, reducing the value of testing to just about null. However, this version is better than prior versions because it essentially requires the entity to determine it's own period of maintenance and testing for UFLS/UVLS for DC Supply and control circuitry. 2. Applicability, 4.2.1, should reflect the Y&W and Tri-State interpretation (Project 2009-17) of "transmission Protection System" and should state: "Protection Systems applied on, or designed to provide protection for a BES Facility and that trips a BES Facility" 3. Applicability, 4.2. - does not reflect the interpretation of Project 20009-10 that excludes non-electrical protection (e.g., sudden pressure relays) and auxiliary relays. Because the definition of Protection System (recently approved) does not clearly exclude "non-electrical" protection,the Applicability section should. For instance,, a vibration monitor, steam pressure, etc. protection of generators, sudden pressure protection of transformers, etc. should not be included in the standard. An alternative is to change the definition of Protection System to make sure it only includes

Voter	Entity	Segment	Vote	Comment
				electrical 4. the VRF of R1 should be Low since the attached tables are essentially the PSMP.
Response: **Thank you for your comments.** **1. For UFLS and UVLS, the maintenance activities related to station dc supply and control circuitry are somewhat constrained relative to similar activities for Protection Systems in general. Regardless, without proper functioning of these component types, UFLS and UVLS will not respond as expected, and will therefore degrade BES system reliability, particularly during the stressed system conditions for which UFLS and UVLS are installed. Relative to control circuitry, Table 1-5 specifically excludes UFLS and UVLS from maintenance activities related to the interrupting device trip coil.** **2. This interpretation is not yet approved by FERC. When this interpretation is approved, the SDT will incorporate it within PRC-005-2. However, the SDT has made changes to Applicability 4.2.1 in consideration of your comment.** **3. The recently-balloted revision of the definition of Protection System, which has been approved by the NERC Board of Trustees and will soon be filed with FERC for approval, clearly includes only protective relays that respond to electrical quantities. As for auxiliary relays, the interpretation to which you refer states that they are not explicitly included, but are included to the degree that an entity's Protection System control circuitry addresses them(which has been identified as a reliability gap), and are being added to PRC-005-2 to resolve the gap.** **4. The SDT disagrees; the Tables establish the intervals and activities, and Requirement R1 addresses the establishment of an entity's individual PSMP.**				
Joe D Petaski	Manitoba Hydro	1	Negative	1. Implementation Plan (Timeline) for R1: In areas not requiring regulatory approval, the 6 month time frame proposed for R1 is not achievable and is not consistent with areas requiring regulatory approval. To be consistent, the effective date for R1 in jurisdictions where no regulatory approval is required should be the first day of the first calendar quarter 12 months after BOT approval. 2. VSLs: The high VSL for R1 "Failed to include all maintenance activities relevant for the identified monitoring attributes specified in Tables 1-1 through 1-5" may be interpreted in different ways and should be further clarified. 3. Table 1-4: The requirements for batteries listed in Table 1-4 do not appear to be consistent with the comments in the FAQ Section (V 1A Example 1). Please see comments submitted during formal comment period for further detail. 4. Table 1-4: The requirement for a 3 month check on electrolyte level seems too frequent based on our experience. We would like to point out that although IEEE std 450 (which seems to be the basis for table 1-4) does recommend intervals it also states that users should evaluate these recommendations against their own operating experience.

Voter	Entity	Segment	Vote	Comment
Response: **Thank you for your comments.** **1. In consideration of your comment, "six" has been modified to "twelve" in the Implementation Plan for Requirement R1, making it consistent with the remainder of the Implementation Plan.** **2. The SDT does not understand your concern; further details are needed.** **3. The SDT decided to eliminate the FAQ document and incorporate the FAQ's contents into the Supplementary Reference Document as appropriate. The SDT considered your comments during this activity.** **4. The SDT believes that the 3-month interval specified in the Standard is appropriate.**				
Terry Harbour	MidAmerican Energy Co.	1	Negative	MidAmerican remains concerned that including requirements for testing of electromechanical trip or auxiliary devices (Table 1-5 Row 3) will in some cases require entire bus outages that will compromise the BES reliability due to the need for entities across the US to take multiple BES elements out of service during the testing. If this requirement is retained additional time should be included in the implementation plan to allow for system modifications, such as the installation of relay test switches, to potentially allow for this testing while minimizing testing outages.
Response: **Thank you for your comments. The SDT has determined that the fundamental concerns of Requirement R1, Part 1.5 and the associated changes are addressed within the PSMP definition, and that Requirement R1, Part 1.5 is not necessary; therefore, it has been removed. Requirement R4 has also been re-drafted to address various related concerns noted within comments. The associated VSL has also been revised. Please see Supplementary Reference Document, Section 8 for a discussion of this.**				
Saurabh Saksena	National Grid	1	Negative	National Grid believes that this new Requirement as written subjects the Transmission Owner, Generation Owner or Distribution Provider to vague interpretations of what the requirement means by compliance officials. The addition of the new part of Requirement R1 that requires the Owners to "identify calibration tolerances or other equivalent parameters for each Protection System component type" is too intrusive and divisive for what it brings to the reliability of the BES.
Response: **Thank you for your comments. The SDT has determined that the fundamental concerns of Requirement R1, Part 1.5 and the associated changes are addressed within the PSMP definition, and that Requirement R1, Part 1.5 is not necessary; therefore, it has been removed. Requirement R4 has also been re-drafted to address various related concerns noted within comments. The associated VSL has also been revised. Please see Supplementary Reference Document, Section 8 for a discussion of this.**				
Richard L. Koch	Nebraska Public Power District	1	Negative	1. The PSMP definition inappropriately extends the maintenance program to include corrective maintenance. The first bullet of the Detailed Description section of the SAR specifically states: "Analysis of correct operations or misoperations may be an integral part of condition-based maintenance processes, but need not be mandated in a maintenance standard." The comment in the SAR was directed toward the Purpose of PRC-017 since it is the only one of the applicable PRC standards that included corrective measures in its Purpose. However, the concept of not including corrective maintenance in a maintenance standard should apply to all of the

Voter	Entity	Segment	Vote	Comment
				applicable PRC standards. The same statement from the SAR identified above was also included in the NERC SPCTF Assessment of Standards referenced in the SAR. Neither the SAR nor the NERC SPCTF Assessment of the Standards identified the need to expand the maintenance and testing program to include corrective maintenance. I recommend deleting the words "and proper operation of malfunctioning components is restored." from the first sentence of the PSMP definition. I believe that failure to do so exceeds the scope of the SAR. 2. Applicability Part 4.2.2: The ERO does not establish underfrequency load-shedding requirements. Those requirements will be established by Reliability Standard PRC-006-1 when it is approved by FERC. I recommend changing Accountability Part 4.2.2. to "...installed to provide last resort system preservation measures." (Note this wording is consistent with the Purpose of PRC-006-0.) 3. Applicability Part 4.2.5.4 and 4.2.5.5: Station Service transformers provide energy to plant loads and not the BES. If these plant transformers are included, why not include the rest of the plant systems? I recommend deleting Applicability Part 4.2.5.4 and 4.2.5.5. 4. Requirement R4: The PSMP definition inappropriately extends the maintenance program to include corrective maintenance. The first bullet of the Detailed Description section of the SAR specifically states: "Analysis of correct operations or misoperations may be an integral part of condition-based maintenance processes, but need not be mandated in a maintenance standard." The comment in the SAR was directed toward the Purpose of PRC-017 since it is the only one of the applicable PRC standards that included corrective measures in its Purpose. However, the concept of not including corrective maintenance in a maintenance standard should apply to all of the applicable PRC standards. The same statement from the SAR identified above was also included in the NERC SPCTF Assessment of Standards referenced in the SAR. Neither the SAR nor the NERC SPCTF Assessment of the Standards identified the need to expand the maintenance and testing program to include corrective maintenance. I recommend deleting the words "including identification of the resolution of all maintenance correctable issues" from the first sentence of the Requirement. I believe that failure to do so exceeds the scope of the SAR. 5. Requirement R4 Part 4.2: The PSMP definition inappropriately extends the maintenance program to include corrective maintenance. The first bullet of the Detailed Description section of the SAR specifically states: "Analysis

Voter	Entity	Segment	Vote	Comment
				of correct operations or misoperations may be an integral part of condition-based maintenance processes, but need not be mandated in a maintenance standard." The comment in the SAR was directed toward the Purpose of PRC-017 since it is the only one of the applicable PRC standards that included corrective measures in its Purpose. However, the concept of not including corrective maintenance in a maintenance standard should apply to all of the applicable PRC standards. The same statement from the SAR identified above was also included in the NERC SPCTF Assessment of Standards referenced in the SAR. Neither the SAR nor the NERC SPCTF Assessment of the Standards identified the need to expand the maintenance and testing program to include corrective maintenance. I recommend re-wording Requirement 4, Part 4.2 to state: "Verify that the components are within the acceptable parameters established in accordance with Requirement R1, Part 1.5 at the conclusion of the maintenance activities." I believe that failure to do so exceeds the scope of the SAR. 6. Measurement M4: The PSMP definition inappropriately extends the maintenance program to include corrective maintenance. The first bullet of the Detailed Description section of the SAR specifically states: "Analysis of correct operations or misoperations may be an integral part of condition-based maintenance processes, but need not be mandated in a maintenance standard." The comment in the SAR was directed toward the Purpose of PRC-017 since it is the only one of the applicable PRC standards that included corrective measures in its Purpose. However, the concept of not including corrective maintenance in a maintenance standard should apply to all of the applicable PRC standards. The same statement from the SAR identified above was also included in the NERC SPCTF Assessment of Standards referenced in the SAR. Neither the SAR nor the NERC SPCTF Assessment of the Standards identified the need to expand the maintenance and testing program to include corrective maintenance. I recommend deleting the words: "and initiated resolution of identified maintenance correctable issues" from the last sentence of Measurement M4. I believe that failure to do so exceeds the scope of the SAR.
Response: **Thank you for your comments.** **1. Corrective maintenance is included within PRC-005-2 only in that the initiation of resolution of maintenance-correctable issues (discovered during maintenance activities) is included. The SDT considers this inclusion to be appropriate and necessary as part of the maintenance program.**				

Voter	Entity	Segment	Vote	Comment
2. Under frequency load shedding requirements, whether established by regional Entities (current practice) or by EC, are ERO requirements. **3. Clause 4.2.5.5 has been removed. Generator-connected station service transformers are essential to the continuing operation of the generation plant; therefore, protection on these system components is included within PRC-005-2 if the generation plant is a BES facility.** **4. Corrective maintenance is included within PRC-005-2 only in that the initiation of resolution of maintenance-correctable issues (discovered during maintenance activities) in included. The SDT considers the inclusion to be appropriate and necessary as part of the maintenance program.** **5. The SDT has determined that the fundamental concerns of Requirement R1, Part 1.5 and the associated changes are addressed within the PSMP definition, and that Requirement R1, Part 1.5 is not necessary; therefore, it has been removed. Requirement R4 has also been re-drafted to address various related concerns noted within comments. The associated VSL has also been revised. Please see Supplementary Reference Document, Section 8 for a discussion of this.** **6. Corrective maintenance is included within PRC-005-2 only in that the initiation of resolution of maintenance-correctable issues (discovered during maintenance activities) in included. The SDT considers the inclusion to be appropriate and necessary as part of the maintenance program.**				
David H. Boguslawski	Northeast Utilities	1	Negative	1) Requirement 1.5 states “Identify calibration tolerances or other equivalent parameters for each Protection System component type that establish acceptable parameters for the conclusion of maintenance activities”. This requirement is too vague and requires that the owner develop his own acceptable calibration tolerances for “each” protection system component type. The Owners internally generated calibration tolerances would then be subjected to the personal interpretation of what this requirement means by compliance officials and auditors. The confusion and divisiveness that this requirement will create far outweigh its potential benefits. 2) Due to the critical nature of the trip coil, it should be maintained more frequently if it is not monitored. Hence, it would be prudent to increase the test frequency of unmonitored trip coil so that it is more frequent than monitored trip coil. 3) In reference to the FAQ document, Section 5 on Station dc Supply, Question K, clarification is needed with respect to dc supplies for communication within the substation. For example, if the communication systems were run off a separate battery in separate area in a substation, would the standard apply to these batteries or not? 4) In section D.1.3., the statement regarding data retention for R2 needs to be reworded. The words “performance based maintenance program” should be changed to “time based maintenance program”, since R2 refers to a time based maintenance program.

Voter	Entity	Segment	Vote	Comment
Response: Thank you for your comments. 1. The SDT has determined that the fundamental concerns of Requirement R1, Part 1.5 and the associated changes are addressed within the PSMP definition, and that Requirement R1, Part 1.5 is not necessary; therefore, it has been removed. Requirement R4 has also been re-drafted to address various related concerns noted within comments. The associated VSL has also been revised. Please see Supplementary Reference Document, Section 8 for a discussion of this. 2. According to Table 1-5, trip coils of interrupting devices must be verified to operate every 6 years, rather than the 12-year interval. You can maintain these devices more frequently if you desire. 3. With respect to dc supply associated only with communication systems, we prescribe, within Table 1-2, that the communications system must be verified as functional every 3 months, unless the functionality is verified by monitoring. The specific station dc supply requirements (Table 1-4) do not apply to the dc supply associated only with communications systems. The SDT has decided to eliminate the FAQ and incorporate topics and discussion from the FAQ within the Supplementary Reference Document. Your comments have been considered within that activity. 4. The SDT concluded that R2 is redundant with R1, Part 1.4, and has deleted R2 (together with the associated Measure and VSL), and data retention that reflects the previous R2.				
Douglas G Peterchuck	Omaha Public Power District	1	Negative	The three newly added requirements not approved by the drafting team are confusing. 1. OPPD believes that Article 1.4 needs to be deleted from the standard. It is redundant and serves no purpose. 2. OPPD believes that Article 1.5 needs to be deleted from the standard. There is a major concern on what an “acceptable parameter” is and how it would be interpreted by the Regional Entities. 3. OPPD believes that Article 4.2 needs to be deleted from the standard. There is no need for this article if Article 1.5 is deleted.
Response: Thank you for your comments. 1. The SDT disagrees; Requirement R1, Part 1.4 supports Requirement R1, Part 1.2, and seems necessary to assure that entities have appropriately applied the longer intervals associated with monitored components. However, in consideration to your comment the SDT has revised R1.4 and has also removed R2 because of redundancy to Requirement R1, Part 1.4. 2. The SDT has determined that the fundamental concerns of Requirement R1, Part 1.5 and the associated changes are addressed within the PSMP definition, and that Requirement R1, Part 1.5 is not necessary; therefore, it has been removed. 3. Requirement R4 has also been re-drafted to address various related concerns noted within comments. The associated VSL has also been revised. Please see Supplementary Reference Document, Section 8 for a discussion of this..				
Chifong L. Thomas	Pacific Gas and Electric Company	1	Negative	1. PG&E submits a Negative vote on Draft 3 of PRC-005-2 due to the addition of Requirement R1, Part 1.5. We do not agree with the addition of Requirement R1, Part 1.5 to the standard, which requires the Owners to "identify calibration tolerances or other equivalent parameters for each Protection System component type". We feel this is too prescriptive and does not belong in the PSMP which should remain at a higher level of detail. This new requirement, as written, can subject the Transmission Owner, Generation Owner or Distribution Provider to vague interpretations

Voter	Entity	Segment	Vote	Comment
				of what the requirement means by compliance officials. Additionally, the new requirement could require documenting thousands of calibration tolerances or other equivalent parameters for companies such as PG&E that use many different types of relays. This level of detail does not belong in the PSMP and would make it nearly impossible to manage. Rather, the calibration tolerances used to test the protection system components should reside in the Transmission Owner, Generation Owner and Distribution Provider's test procedure documents, test macros, or relay instruction manuals. PG&E also has comments on the Implementation Plan document. 2. PG&E does not agree with the time frames listed for implementation of Requirements R1, R2, R3 and R4, as explained below: a. Implementation plan for Requirement R1: Time was extended from three months to twelve months following regulatory approval which we agree with. For those jurisdictions where no regulatory approval is required it would seem that the time frame should also be extended to at least twelve months following NERC Board approval. However, it is still listed as six months following NERC Board approval. b. Implementation plan for Requirements R2, R3 and R4: For Protection System Components with maximum allowable intervals less than 1 year, it does not make sense to require 100% compliance after twelve months following regulatory approval, when this is the same time frame for compliance with Requirement R1 for establishment of the new PSMP. The implementation time window for Requirements R2, R3 and R4 should follow the implementation of Requirement R1 which establishes the new PSMP. So the dates listed for 100% compliance with Requirements R2, R3 and R4 should all be pushed out by 12 months each. c. Following is a summary time line for suggested implementation requirements. o Months 1-12 Establish PSMP per R1 i. Month 12+ Begin performing maintenance under new PSMP ii. Month 24 100% compliance date for R2, R3, R4, for components with max allowable intervals less than 1 year. iii. 3 Calendar Years 100% compliance date for R2, R3, R4, for components with max allowable intervals 1 year or more, but 2 years or less.

Voter	Entity	Segment	Vote	Comment
				iv. 3 Calendar Years 30% compliance date for R2, R3, R4, for components with max allowable intervals of 6 years. v. 5 Calendar Years 60% compliance date for R2, R3, R4, for components with max allowable intervals of 6 years. vi. 7 Calendar Years 100% compliance date for R2, R3, R4, for components with max allowable intervals of 6 years. 3. Overall the updated standard is a huge improvement over Draft 2 in terms of structure of the tables and presentation, which simplifies the standard quite a bit. PG&E would have been in support of Draft 3 if the requirement R1.5 had not been added.
Response: **Thank you for your comments.** **1. The SDT has determined that the fundamental concerns of Requirement R1, Part 1.5 and the associated changes are addressed within the PSMP definition, and that Requirement R1, Part 1.5 is not necessary; therefore, it has been removed. Requirement R4 has also been re-drafted to address various related concerns noted within comments. The associated VSL has also been revised. Please see Supplementary Reference Document, Section 8 for a discussion of this.** **2. The Implementation Plan for R1 has been changed from six months to twelve months, and the Implementation Plan for Protection System Components with maximum allowable intervals less than 1 year has been changed from 12 months to 15 months in consideration of your comment. The Implementation Plan for R4 has been revised to add one year to all established dates.** **3. The SDT has determined that the fundamental concerns of Requirement R1, Part 1.5 and the associated changes are addressed within the PSMP definition and that Requirement R1, Part 1.5 is not necessary. Therefore, it has been removed. The associated VSL has also been revised.**				
Brenda L Truhe	PPL Electric Utilities Corp.	1	Negative	PPL Electric Utilities ("PPL EU") appreciate the hard work and efforts of the Standards Drafting Team in reaching this point in the standards development process. The basis for the negative vote is the addition of Requirement R1.5 (calibration tolerances) and R4.2 to the standard. This requirement will provide the opportunity for auditors to decide if the testing criteria for whether a relay passes a test or not is acceptable. PPL EU recommends that Requirement R1.5 be deleted from the standard.
Response: **Thank you for your comments. The SDT has determined that the fundamental concerns of Requirement R1, Part 1.5 and the associated changes are addressed within the PSMP definition, and that Requirement R1, Part 1.5 is not necessary; therefore, it has been removed. Requirement R4 has also been re-drafted to address various related concerns noted within comments. The associated VSL has also been revised. Please see Supplementary Reference Document, Section 8 for a discussion of this.**				
Kenneth D. Brown	Public Service Electric and Gas Co.	1	Negative	The PSEG Companies do not agree with the Facilities as currently described in section 4.2.5.5. Please refer to detailed comments provided in the formal Comment Form.
Response: **Thank you for your comments. Please see our responses to your comments from the formal comment period.**				

Voter	Entity	Segment	Vote	Comment
Pawel Krupa	Seattle City Light	1	Negative	Comment: The proposed Standard PRC-005-2 is an improvement over the previous draft in that it provides more consistency in maintenance and testing duration internals. Notwithstanding, two issues are of concern to Seattle City Light such that it is compelled to vote no: 1) the establishment of bookends for standard verification and 2) the implementation timelines for entities with systems where electro-mechanical relays still compose a significant number of components in their protection systems. 1. Bookends: Proposed Standard PRC-005-2 specifies long inspection and maintenance intervals, up to 12 years, which correspondingly exacerbates the so-called “bookend” issue. To demonstrate that interval-based requirements have been met, two dates are needed - bookends. Evidencing an initial date can be problematic for cases where the initial date would occur prior to the effective date of a standard. NERC has provided no guidance on this issue, and the Regions approach it differently. Some, such as Texas Regional Entity, require initial dates beginning on or after the effective date of a Standard. Compliance with intervals is assessed only once two dates are available that occur on or after a standard took effect. Other regions, such as Western Electricity Coordinating Council (WECC), require that entities evidence an initial date prior to the effective date of a standard. For WECC, compliance with intervals is assessed as soon as a standard takes effect. Such variation makes application of standards involving bookends uncertain, arbitrary, capricious, and in the case of WECC, possibly illegal. Proposed Standard PRC-005-2 will be another such standard. Indeed this Standard will involve by far the largest number of bookends of any NERC standard - many thousands for a typical entity. Furthermore, the long inspection and maintenance intervals introduced in the draft will require entities in WECC, for instance, to evidence initial bookend dates prior to the date original PRC-005-1 took effect. For the 12-year intervals for CTs and VTs in proposed Standard PRC-005-2, many initial dates will occur prior to the 2005 Federal Power Act that authorized Mandatory Reliability Standards and even reach back before the 2003 blackout that catalyzed the effort to pass the Federal Power Act. As a result, many entities in WECC maybe at risk of being found in violation of proposed Standard PRC-005-2 immediately upon its implementation. Seattle City Light requests that NERC address the bookends issue, either within proposed Standard PRC-005-2 or in a

Voter	Entity	Segment	Vote	Comment
				separate, concurrent document. 2. Legacy Systems: Many entities still have legacy protection systems that rely upon electro-mechanical relays. Effective testing approaches differ between electro-mechanical and digital relay systems. Thus, although the proposed standard rightly looks to the future of digital relays by specifying testing and maintenance focused on protection systems as a whole, the proposed implementation timelines create a level of hardship for those utilities with legacy systems. In example, auxiliary relay and trip coil testing may be essential to prove the correct operation of complex, multi-function digital protection systems. However, for legacy systems with single-function electro-mechanical components, the considerable documentation and operational testing needed to implement and track such testing is not necessarily proportional to the relative risk posed by the equipment to the bulk electric system. Performance testing of electro-mechanical systems, particularly regarding control circuits, will require extensive disconnection and reconnection of portions of the circuits. Such activities will likely cause far more problems on restoration-to-service than they will locate and correct. As such, to assist entities in their implementation efforts, we believe provision of alternatives are necessary, such as additional implementation time through phasing and/or through technical feasability exceptions.
Response: **Thank you for your comments.** **1. This issue has been addressed by NERC in Compliance Application Notice CAN-008 "PRC-005 R2 Pre-June 18 Evidence".** **2. Please see Sections 8 and 15.3 of the Supplementary Reference Document for a discussion on this topic. FERC Order 693 directs that NERC establish requirements for the maintenance of the Protection System and control circuitry is a portion thereof. Therefore, requirements for the maintenance of the control circuitry are necessary and the SDT has developed those requirements in a fashion that affords entities with the opportunity to best meet those requirements.**				
Horace Stephen Williamson	Southern Company Services, Inc.	1	Negative	Reference the new Requirements R.1.5 and R.4.2 which are new to this posting: R.1.5 requires the Owners to "identify calibration tolerances or other equivalent parameters for each Protection System component type" is too intrusive and divisive for what it brings to the reliability of the BES. The entire SDT needs to thoroughly discuss these new requirements and modify or delete them. Note: We have also made various requests for clarification to the FAQ and Supplemental Reference document in our Response to Comments which we are not including here.
Response: **Thank you for your comments. The SDT has determined that the fundamental concerns of Requirement R1, Part 1.5 and the associated changes are addressed within the PSMP definition, and that Requirement R1, Part 1.5 is not necessary; therefore, it has been removed. Requirement R4 has also been re-drafted to address various related concerns noted within comments. The associated VSL has also been revised. Please see Supplementary Reference Document, Section 8 for a discussion of this.**				

Voter	Entity	Segment	Vote	Comment
Larry Akens	Tennessee Valley Authority	1	Negative	NERC is making significant changes to this sizeable standard and only allowing minimum comment period. While this is a good standard that has clearly taken many hours to develop, we are primarily voting "NO" because of the hurried fashion it is being commented, voted, and reviewed.
Response: **Thank you for your comments. Because of the urgent priority placed on this Standard by NERC, this Standard was posted for a 30-day formal comment period with a concurrent 10-day ballot period at the conclusion of that comment period, even though the Standard Development Process allows for a maximum 45-day formal comment period.**				
Brandy A Dunn	Western Area Power Administration	1	Negative	1) Western disagrees with the requirement R1, Part 1.5 that requires identifying "calibration tolerances or equivalent parameters for each Protection System component~" This requirement will add a burdensome, manual documentation of thousands of tolerances and parameters that are now part of multiple automated software programs and routines. These programs were purchased and developed over numerous years of testing experience by Western and testing equipment manufacturers. The fact that these tolerance and parameters are automated to Pass/Fail program notifications, gives our Maintenance Divisions repeatable testing programs that are not dependent on personnel interpretations. Extracting all these tolerances and parameters from these programs provides no benefit for our PSMP. 2) Western disagrees with the wording of the R4.2 requirement referencing the Part 1.5 of R1. The requirements of R4 are that you are to perform the appropriate maintenance activity and the associated testing. The fact that the testing was done and the equipment passed the testing meets the compliance for R4. If the equipment fails the testing, it then becomes a maintenance correctable issue, that requires adjustment or replacing, with further testing until the equipment passes the required testing. Documenting thousands of tolerances and parameters, for possibly thousands of components, serves no useful purpose for our PSMP or compliance documentation.
Response: **Thank you for your comments. The SDT has determined that the fundamental concerns of Requirement R1, Part 1.5 and the associated changes are addressed within the PSMP definition, and that Requirement R1, Part 1.5 is not necessary; therefore, it has been removed. Requirement R4 has also been re-drafted to address various related concerns noted within comments. The associated VSL has also been revised. Please see Supplementary Reference Document, Section 8 for a discussion of this.**				
Gregory L Pieper	Xcel Energy, Inc.	1	Negative	"We feel that several improvements were made since the last draft. However, we feel that some gaps exist that should be addressed before moving this project forward. We have detailed our issues in our formal comments."
Response: **Thank you for your comments. Please see our responses to your comments from the formal comment period.**				

Voter	Entity	Segment	Vote	Comment
Kim Warren	Independent Electricity System Operator	2	Negative	1. Requirement R1, Part 1.5 is vague and needs clarification. It is not clear what "Identify calibration tolerances or other equivalent parameters" means and this may be subject to different interpretations by entities and compliance enforcement personnel. 2. Additionally, in the Implementation plan for Requirement R1, we recommend changing "six" to "fifteen" to restore the 3-month time difference between the durations of the implementation periods for jurisdictions that do and don't require regulatory approval, which existed in the previous draft. This change will ensure equity for those entities located in jurisdictions that do not require regulatory approval as is the case here in Ontario. More importantly it supports the IESO's strong belief in the principle that reliability standards should be implemented in an orderly and coordinated fashion across regions to ensure system reliability is not compromised.
Response: **Thank you for your comments.** **1. The SDT has determined that the fundamental concerns of Requirement R1, Part 1.5 and the associated changes are addressed within the PSMP definition, and that Requirement R1, Part 1.5 is not necessary; therefore, it has been removed. Requirement R4 has also been re-drafted to address various related concerns noted within comments. The associated VSL has also been revised. Please see Supplementary Reference Document, Section 8 for a discussion of this.** **2. In consideration of your comment, "six" has been modified to "twelve" in the Implementation Plan for Requirement R1, making it consistent with the remainder of the Implementation Plan**				
Richard J. Mandes	Alabama Power Company	3	Negative	Reference the new Requirements R.1.5 and R.4.2 which are new to this posting: R.1.5 requires the Owners to "identify calibration tolerances or other equivalent parameters for each Protection System component type" is too intrusive and divisive for what it brings to the reliability of the BES. The entire SDT needs to thoroughly discuss these new requirements and modify or delete them. Note: We have also made various requests for clarification to the FAQ and Supplemental Reference document in our Response to Comments which we are not including here.
Response: **Thank you for your comments. The SDT has determined that the fundamental concerns of Requirement R1, Part 1.5 and the associated changes are addressed within the PSMP definition, and that Requirement R1, Part 1.5 is not necessary; therefore, it has been removed. Requirement R4 has also been re-drafted to address various related concerns noted within comments. The associated VSL has also been revised. Please see Supplementary Reference Document, Section 8 for a discussion of this.**				
Bob Reeping	Allegheny Power	3	Negative	Allegheny Power applauds the hard work that the Standards Draft Team has exhibited in producing a clear and enforceable standard that will increase the reliability of the Bulk Electric System. However, the addition of requirement 1.5 is such a significant change in scope from the last draft that a further review of the potential impact and any implementation concerns is required by AP and the industry in general before we can consider voting in-favor of this standard.

Voter	Entity	Segment	Vote	Comment
Response: **Thank you for your comments. The SDT has determined that the fundamental concerns of Requirement R1, Part 1.5 and the associated changes are addressed within the PSMP definition, and that Requirement R1, Part 1.5 is not necessary; therefore, it has been removed. Requirement R4 has also been re-drafted to address various related concerns noted within comments. The associated VSL has also been revised. Please see Supplementary Reference Document, Section 8 for a discussion of this.**				
Raj Rana	American Electric Power	3	Negative	Restructured Tables: 1. Table 1.5 (Control Circuitry), row 4, indicates a maximum interval of 12 years for unmonitored control circuitry, yet other portions of control circuitry have a maximum interval of 6 years. AEP does not understand the rationale for the difference in intervals, when in most cases, one verifies the other. Also, unmonitored control circuitry is capitalized in row 4 such that it infers a defined term. 2. In the first row of table 1-4 on page 16, it is difficult to determine if it is a cell that wraps from the previous page or is a unique row. This is important because the Maximum Maintenance Intervals are different (i.e. 18 months vs 6 years). It is difficult to determine to which elements the 6 year Maximum Maintenance Interval applies. AEP suggests repeating the heading "Monitored Station dc supply (excluding UFLS and UVLS) with: Monitor and alarm for variations from defined levels (See Table 2):" for the bullet points on this page. VSLs, VRFs and Time Horizons: 3. The VSL table should be revised to remove the reference to the Standard Requirement 1.5 in the R1 "High" VSL. 4. All four levels of the VSL for R2 make reference to a "condition-based PSMP." However, nowhere in the standard is the term "condition-based" used in reference to defining ones PSMP. The VSL for R2 should be revised to remove reference to a condition-based PSMP; alternatively the Standard could be revised to include the term "condition-based" within the Standard Requirements and Table 1. 5. In multiple instances, Table 1 uses the phrase "No periodic maintenance specified" for the Maximum Maintenance Interval. Is this intended to imply that a component with the designated attributes is not required to have any periodic maintenance? If so, the wording should more clearly state "No periodic maintenance required" or perhaps "Maintain per manufacturers recommendations." Failure to clearly state the maintenance requirement for these components leaves room for interpretation on whether a Registered Entity has a maintenance and testing program for devices where the Standard has not specified a periodic maintenance interval and the manufacturer states that no maintenance is required. FAQ and Supplementary Reference:

Voter	Entity	Segment	Vote	Comment
				6. With such a complex standard as this, the FAQ and Supplementary Reference documents do aid the Protection System owner in demystifying the requirements. But AEP holds strong doubt on how much weight the documents carry during audits. It would be better to include them as an appendix in the actual standard, but in a more compact version with the following modifications: a. Section 5 of the Supplementary Reference, refers to "condition-based" maintenance programs. However, nowhere in the standard is the term "condition-based" used in reference to defining ones PSMP. The Supplementary Reference should be revised to remove reference to a condition-based PSMP; alternatively the Standard could be revised to include the term "condition-based" within the Standard Requirements and Table 1. b. Section 15.7, page 26, appears to have a typographical error "...can all be used as the primary action is the maintenance activity..." c. Figure 2 is difficult to read. The figure is grainy and the colors representing the groups are similar enough that it is hard to distinguish between groups. "Frequently-Asked Questions": 7. With such a complex standard as this, the FAQ and Supplementary Reference documents do aid the Protection System owner in demystifying the requirements. But AEP holds strong doubt on how much weight the documents carry during audits. It would be better to include them as an appendix in the actual standard, but in a more compact version with the following modifications: a. The section "Terms Used in PRC-005-2" is blank and should be removed as it adds no value. b. Section I.1 and Section IV.3.G reference "condition-based" maintenance programs. However, nowhere in the standard is the term "condition-based" used in reference to defining ones PSMP. The FAQ should be revised to remove reference to a condition-based PSMP; alternatively the Standard could be revised to include the term "condition-based" within the Standard Requirements and Table 1. c. The second sentence to the response in Section I.1 appears to have a typographical error "... an entity needs to and perform ONLY time-based...". General:

Voter	Entity	Segment	Vote	Comment
				8. Standards Requirement 1.5 and the reference to R1.5 in Requirement 4.2 should be removed. Specifying calibration tolerances for every protection system component type, while a seemingly good idea, represents a substantial change in the direction of the standard. It would be very onerous for companies to maintain a list of calibration tolerances for every protection system component type and show evidence of such at an audit. AEP believes entities need the flexibility to determine what acceptance criteria is warranted and need discretion to apply real-time engineering/technician judgment where appropriate. 9. Three different types of maintenance programs (time-based, performance-based and condition-based) are referenced in the standard or VSLs, yet the time-based and condition-based programs are neither defined nor described. Certain terms defined within the definition section (such as Countable Event or Segment) only make sense knowing what those three programs entail. These programs should be described within the standard itself and not assume a knowledge of material in the Supplementary Reference or FAQ. 10. "Protective relay" should be a defined term that lists relay function for applicability. There are numerous 'relays' used in protection and control schemes that could be lumped in and be erroneously included as part of a Protection System. For example, reclosing or synchronizing relays respond to voltage and hence could be viewed by an auditor as protective relays, but they in fact perform traditional control functions versus traditional protective functions. 11. The Data Retention requirement of keeping maintenance records for the two most recent maintenance performances is a significant hurdle for any owners to abide by during the initial implementation period. The implementation plan needs to account for this such that Registered Entities do not have to provide retroactive testing information that was not explicitly required in the past.

Response: **Thank you for your comments.**

1. **The 6-year activities are all related to components with "moving parts", and the 12-year activities are related to the other portions of the control circuitry. The capitalized term has been corrected and additional changes have been made.**
2. **Table 1-4 has been modified in consideration of your comments.**
3. **The SDT has determined that the fundamental concerns of Requirement R1, Part 1.5 and the associated changes are addressed within the PSMP definition, and that Requirement R1, Part 1.5 is not necessary; therefore, it has been removed. The associated VSL has also been revised.**

Voter	Entity	Segment	Vote	Comment
				4. The SDT concluded that Requirement R2 is redundant to Requirement R1, Part 1.4 and has deleted Requirement R2 (together with the Measures and & VSL). 5. If the indicated monitoring attributes are present, no "hands-on" periodic maintenance is required, as the monitoring of the component is providing a continuing indication of its functionality. 6. The discussion within the Supplementary Reference and FAQ are informative, not normative, and thus do not belong as part of the standard. D. The Supplementary Reference Document discusses condition-based maintenance in a conceptual manner, as a generally-recognized term. The SDT did make some changes within the Supplementary Reference document to clarify the manner in which condition-based maintenance is discussed. The SDT decided to eliminate the FAQ document and incorporate the FAQ's contents into the Supplementary Reference Document as appropriate. The SDT considered your comments during this activity. E. This clause has been corrected. 7. The discussion within the Supplementary Reference and FAQ are informative, not normative, and thus do not belong as part of the standard. b) The SDT decided to eliminate the FAQ document and incorporate the FAQ's contents into the Supplementary Reference Document as appropriate. The SDT considered your comments during this activity. c) The SDT decided to eliminate the FAQ document and incorporate the FAQ's contents into the Supplementary Reference Document as appropriate. The SDT considered your comments during this activity. d) The SDT decided to eliminate the FAQ document and incorporate the FAQ's contents into the Supplementary Reference Document as appropriate. The SDT considered your comments during this activity. 8. The SDT has determined that the fundamental concerns of Requirement R1, Part 1.5 and the associated changes are addressed within the PSMP definition, and that Requirement R1, Part 1.5 is not necessary; therefore, it has been removed. Requirement R4 has also been re-drafted to address various related concerns noted within comments. The associated VSL has also been revised. Please see Supplementary Reference Document, Section 8 for a discussion of this. 9. The term, "condition-based" has been removed from the draft standard. The other terms are used, but are clear in the context in which they are used. 10. "Protective relay" is defined by IEEE, and the SDT sees no need to either change the definition or to repeat the definition with PRC-005. Further, the applicability of generically-described protective relays is defined by the Applicability clause of PRC-005-2. 11. In order that a Compliance Monitor can be assured of compliance, the SDT believes that the Compliance Monitor will need the data of the most recent performance of the maintenance, as well as the data of the preceding one to validate that entities have been in compliance since the last audit (or currently, since the beginning of mandatory compliance). The SDT has specified the data retention in the posted standard to establish this level of documentation. This seems to be consistent with the current practices of several Regional Entities.

Voter	Entity	Segment	Vote	Comment
Rebecca Berdahl	Bonneville Power Administration	3	Negative	Please refer to BPA's submitted comments on 12/16/10.
Response: **Thank you for your comments. Please see our responses to your comments from the formal comment period.**				
Steve Alexanderson	Central Lincoln PUD	3	Affirmative	WECC does not use the definition of the BES that NERC supplied to FERC via http://www.nerc.com/docs/docs/ferc/RM06-16-6-14-07CompFilingPar77ofOrder693FINAL.pdf, so the answer to FAQ III.1.3 (page 19-20) is not accurate.
Response: **Thank you for your comments. The SDT decided to eliminate the FAQ document and incorporate the FAQ's contents into the Supplementary Reference Document as appropriate. The SDT considered your comments during this activity.**				
Gregg R Griffin	City of Green Cove Springs	3	Negative	1. UFLS and UVLS maintenance and testing is greatly expanded, e.g., we interpreted PRC-008/011 as being only the UFLS/UVLS equipment. The new PRC-005 sweeps in other protection system components, e.g., communications (probably not applicable), voltage and current sensing devices (e.g., instrument transformers), Station DC supply, control circuitry. What's key about this is that these components are all part of distribution system protection, so, these activities would not be covered by other BES protection system maintenance and testing. I'm sure we are testing batteries and the like, but, we are probably not testing battery chargers and control circuitry, and, in many cases distribution circuits are such that it is very difficult, if not impossible, to test control circuitry to the trip coil of the breaker without causing an outage of the customers on that distribution circuit. There is no real reliability need for this either. Unlike Transmission and Generation Protection Systems which are needed to clear a fault and may only have one or two back-up systems, there are thousands and thousands of UFLS relays and if one fails to operate, it will not be noticeable to the event. It does make sense to test the relays themselves in part to ensure that the regio0nsl UFLS program is being met, but, to test the other protection system components is not worthwhile. Note that DC Supplies and most of the control circuitry of distribution lines are "tested" frequently by distribution circuits clearing faults such as animals, vegetation blow-ins, lightning, etc., on distribution circuits, reducing the value of testing to just about null. However, this version is better than prior versions because it essentially requires the entity to determine it's own period of maintenance and testing for UFLS/UVLS for DC Supply and control circuitry.

Voter	Entity	Segment	Vote	Comment
				2. Applicability, 4.2.1, should reflect the Y&W and Tri-State interpretation (Project 2009-17) of "transmission Protection System" and should state: "Protection Systems applied on, or designed to provide protection for a BES Facility and that trips a BES Facility" 3. Applicability, 4.2. - does not reflect the interpretation of Project 20009-10 that excludes non-electrical protection (e.g., sudden pressure relays) and auxiliary relays. Because the definition of Protection System (recently approved) does not clearly exclude "non-electrical" protection,the Applicability section should. For instance,, a vibration monitor, steam pressure, etc. protection of generators, sudden pressure protection of transformers, etc. should not be included in the standard. An alternative is to change the definition of Protection System to make sure it only includes electrical 4. the VRF of R1 should be Low since the attached tables are essentially the PSMP.
Response: **Thank you for your comments.** **1. For UFLS and UVLS, the maintenance activities related to station dc supply and control circuitry are somewhat constrained relative to similar activities for Protection Systems in general. Regardless, without proper functioning of these component types, UFLS and UVLS will not respond as expected, and will therefore degrade BES system reliability, particularly during the stressed system conditions for which UFLS and UVLS are installed. Relative to control circuitry, Table 1-5 specifically excludes UFLS and UVLS from maintenance activities related to the interrupting device trip coil.** **2. This interpretation is not yet approved by FERC. When this interpretation is approved, the SDT will incorporate it within PRC-005-2. However, the SDT has made changes to Applicability 4.2.1 in consideration of your comments.** **3. The recently-balloted revision of the definition of Protection System, which has been approved by the NERC Board of Trustees and will soon be filed with FERC for approval, clearly includes only protective relays that respond to electrical quantities. As for auxiliary relays, the interpretation to which you refer states that they are not explicitly included, but are included to the degree that an entity's Protection System control circuitry addresses them(which has been identified as a reliability gap), and are being added to PRC-005-2 to resolve the gap.** **4. The SDT disagrees; the Tables establish the intervals and activities, and Requirement R1 addresses the establishment of an entity's individual PSMP.**				
Bruce Krawczyk	ComEd	3	Negative	The addition of the requirement R1.5 and associated wording has resulted in Exelon to vote No on the standard. While Exelon does specify Protection System tolerances and parameters in many maintenance documents; attempting to establish documented requirements for each component type is not practical. Additionally, this can leave much to the discretion of an auditor as to how in-depth tolerances need to be. There are many equipment and applications variations, many of which can utilize generic values while others require very specific value

Voter	Entity	Segment	Vote	Comment
				ranges. There are many instances where a very specific component tolerance is required for one application, but the same component doesn't require a tolerance in a different application. This could lead to entities having to justify why one application with a common component requires a narrow range versus the same component in another application can use a generic value or no tolerance. The last part of the requirement is also not clear. If a parameter is established, the R1.5 requirement is inferring component must meet an acceptable parameter to conclude the maintenance activity. There are many instances when a component is found out of a tolerance, but the level does not require immediate action and can even be scheduled for remediation at the next maintenance cycle. The wording in R1.5 appears to conflict with the R4.2 which indicates maintenance activities can be conclude as long as corrective maintenance is initiated as a result of identifying the condition.
Response: **Thank you for your comments. The SDT has determined that the fundamental concerns of Requirement R1, Part 1.5 and the associated changes are addressed within the PSMP definition, and that Requirement R1, Part 1.5 is not necessary; therefore, it has been removed. Requirement R4 has also been re-drafted to address various related concerns noted within comments. The associated VSL has also been revised. Please see Supplementary Reference Document, Section 8 for a discussion of this.**				
Peter T Yost	Consolidated Edison Co. of New York	3	Negative	The Tables - 1. The wording "Component Type" is not necessary in each title. Just the equipment category should be listed--what is now shown as "Component Type - Protective Relay", should be Protective Relay. However, Protective Relay is too general a category. Electromechanical relays, solid state relays, and microprocessor based relays should have their own separate tables. So instead of reading Protective Relay in the title, it should read Electromechanical Relays, etc. This will lengthen the standard, but will simplify reading and referring to the tables, and eliminate confusion when looking for information. 2. The "Note" included in the heading is also not necessary. "Attributes" is also not necessary in the column heading, "Component" suffices. Other Comments – 3. In general, the standard is overly prescriptive and complex. It should not be necessary for a standard at this level to be as detailed and complex as this standard is. Entities working with manufacturers, and knowledge gained from experience can develop adequate maintenance and testing programs. 4. Why are "Relays that respond to non-electrical inputs or impulses (such as, but not limited to, vibration, pressure, seismic, thermal or gas accumulation)…" not included? The output contacts from these devices

Voter	Entity	Segment	Vote	Comment
				are oftentimes connected in tripping or control circuits to isolate problem equipment. 5. Due to the critical nature of the trip coil, it must be maintained more frequently if it is not monitored. Trip coils are also considered in the standard as being part of the control circuitry. Table 1-5 has a row labeled "Unmonitored Control circuitry associated with protective functions", which would include trip coils, has a "Maximum Maintenance Interval" of "12 Calendar Years". Any control circuit could fail at any time, but an unmonitored control circuit could fail, and remain undetected for years with the times specified in the Table (it might only be 6 years if I understand that as being the trip test interval specified in the table). Regardless, if a breaker is unable to trip because of control circuit failure, then the system must be operated in real time assuming that that breaker will not trip for a fault or an event, and backup facilities would be called upon to operate. Thus, for a line fault with a "stuck" breaker (a breaker unable to trip), instead of one line tripping, you might have many more lines deloaded or tripped because of a bus having to be cleared because of a breaker failure initiation. The bulk electric system would have to be operated to handle this contingency. 6. In reference to the FAQ document, Section 5 on Station dc Supply, Question K, clarification is needed with respect to dc supplies for communication within the substation. For example, if the communication systems were run off a separate battery in separate area in a substation, would the standard apply to these batteries or not? 7. To define terms only as they are used in PRC-005-2 is inviting confusion. Although they may be unique to PRC-005-2, some or all of them may be used in future standards, some already may be used in existing standards, and may or may not be deliberately defined. Consistency must be maintained, not only for administrative purposes, but for effective technical communications as well. 8. What is the definition of "Maintenance" as used in the table column "Maximum Maintenance Interval"? Maintenance can range from cleaning a relay cover to a full calibration of a relay. 9. A control circuit is not a component, it is made up of components. 10. Sub-requirement 1.5 needs to be clarified. It is not clear what "Identify calibration tolerances or other equivalent parameters…" means, and may be subject to different interpretations by entities and compliance enforcement personnel. 11. In the Implementation plan for Requirement R1, recommend changing

Voter	Entity	Segment	Vote	Comment
				"six" to fifteen. This change would restore the 3-month time difference that existed in the previous draft, between the durations of the implementation periods for jurisdictions that do and do not require regulatory approval. It will ensure equity for those entities located in jurisdictions that do not require regulatory approval, as is the case in Ontario. 12. The 'box' for "Monitored Station dc supply..." in Table 1-4 is not clear. It seems to continue to the next page to a new box. There are multiple activities without clear delineation. 13. Regarding station service transformers, Item 4.2.5.5 under Applicability should be deleted. The purpose of this standard is to protect the BES by clearing generator, generator bus faults (or other electrical anomalies associated with the generator) from the BES. Having this standard apply to generator station service transformers, that have no direct connection to the BES, does meet this criteria. The FAQs (III.2.A) discuss how the loss of a station service transformer could cause the loss of a generating unit, but this is not the purpose of PRC-005. Using this logic than any system or device in the power plant that could cause a loss of generation should also be included. This is beyond the scope of the NERC standards.

Response: **Thank you for your comments.**

1. The SDT believes that the table headings are appropriate as reflected in the draft standard.

2. The SDT believes that the table headings are appropriate as reflected in the draft standard.

3. The intervals and activities specified are believed by the SDT to be technically effective, in a fashion that may be consistently monitored for compliance. Further, FERC Order 693 directs NERC to establish maximum allowable intervals, which implies that minimum activities also need to be prescribed. If an entities' experience is that components require less-frequent maintenance, a performance-based program in accordance with R3 and Attachment A is an option.

4. The SDT concentrated their efforts on protective relays which use the entire group of component types within the Protection System definition. Also, there is currently no technical basis for the maintenance of the devices which respond to non-electrical quantities on which to base mandatory standards related either to activities or intervals. Absent such a technical basis, we are currently unable to establish mandatory requirements, but may do so in the future if such a technical basis becomes available.

5. According to Table 1-5, trip coils of interrupting devices must be verified to operate every 6 years, rather than the 12-year interval. You can maintain these devices more frequently if you desire

6. With respect to dc supply associated only with communication systems, we prescribe, within Table 1-2, that the communications system must be verified as functional every 3 months, unless the functionality is verified by monitoring. The

Voter	Entity	Segment	Vote	Comment
				specific station dc supply requirements (Table 1-4) do not apply to the dc supply associated only with communications systems. The SDT decided to eliminate the FAQ document and incorporate the FAQ's contents into the Supplementary Reference Document as appropriate. The SDT considered your comments during this activity. **7. The SDT has proposed these terms for use only within PRC-005-2 because we are concerned that other uses of these terms, either now or in the future, may not be consistent with the terms used here. They are defined only for clarify within this standard.** **8. As used in the "Maximum Maintenance Interval" column title of the table, maintenance refers to whatever activities are specified in the Activities column. The term is capitalized in the column title in conformance with normal editorial practice as a title, rather than as a definition.** **9. For purposes of this standard, the control circuit IS defined as one component type.** **10. The SDT has determined that the fundamental concerns of Requirement R1, Part 1.5 and the associated changes are addressed within the PSMP definition, and that Requirement R1, Part 1.5 is not necessary; therefore, it has been removed. Requirement R4 has also been re-drafted to address various related concerns noted within comments. The associated VSL has also been revised. Please see Supplementary Reference Document, Section 8 for a discussion of this.** **11. In consideration of your comment, "six" has been modified to "twelve" in the Implementation Plan for R1, making it consistent with the remainder of the Implementation Plan.** **12. Table 1-4 has been further modified for clarity.** **13. In response to many comments, including yours, the SDT has removed 4.2.5.5 from the Applicability of the standard.**
David A. Lapinski	Consumers Energy	3	Negative	We have the following comment on the revisions, specifically sub-requirement R1.12a, which states, "Set the maximum torque angle (MTA) to 90 degrees or the highest supported by the manufacturer.". We have no issue with this requirement on transmission lines that are 200 kV or greater. However, we do have a concern with applying requirement R1.12a on lower voltage lines now that the Transmission Relay Loadability Standard is being revised to included selected equipment 200 kV and below. The positive-sequence line angle on lower voltage lines, such as 69 kV or 46 kV, is significantly lower than 90 degrees. The positive-sequence line angle for 3/0 ACSR, for example, is only 55 degrees. Setting a 90 degree MTA on these lines would require a much larger reach setting to provide adequate line protection. In some cases, especially for lines with long spurs and poor line conductor, the increased reach setting may actually provide less loadability than a reach setting based on an MTA set at the positive-sequence line angle. A 90 degree MTA also dramatically reduces the resistive fault coverage for these lines. For these reasons, we would propose a modification to sub-

Voter	Entity	Segment	Vote	Comment
				requirement R1.12a as follows: Set the maximum torque angle (MTA) to 90 degrees or the highest supported by the manufacturer on 200 kV or greater transmission lines. Set the maximum torque angle (MTA) to the positive-sequence line angle on transmission lines less than 200 kV.
Response: **Thank you for your comments. This comment appears to apply to PRC-023-2 (Project 2010-17), which is a separate activity, and is not apparently relevant to PRC-005-2.**				
Michael F Gildea	Dominion Resources Services	3	Negative	Dominion is opposed to this version because Requirement R1.5 is overly prescriptive, requiring an extraordinary level of documentation, with little anticipated improvement in reliability.
Response: **Thank you for your comments. The SDT has determined that the fundamental concerns of Requirement R1, Part 1.5 and the associated changes are addressed within the PSMP definition, and that Requirement R1, Part 1.5 is not necessary; therefore, it has been removed. Requirement R4 has also been re-drafted to address various related concerns noted within comments. The associated VSL has also been revised. Please see Supplementary Reference Document, Section 8 for a discussion of this.**				
Henry Ernst-Jr	Duke Energy Carolina	3	Negative	1. R1.4 and R1.5 need more information to provide clarity for compliance. It's unclear to us what the expectation is for compliance documentation for "monitoring attributes and related maintenance activities" in R1.4 and "calibration tolerances or other equivalent parameters" in R1.5. This is fairly straightforward for relays, but not for other component types. Either provide clarity or delete these requirements. 2. R4.2 - it is critical that more clarity be provided for R1.5 so that we can also understand what the compliance expectation is for R4.2 3. M4 - Need to clarify that these pieces of evidence are all "or", not "and" (i.e. any of the listed examples are sufficient for compliance). We reiterate the need for additional clarity on R1.5 and R4.2 such that compliance can be demonstrated for all component types. 4. Table 2 - We are fairly clear on the expectation for relays, but need more clarity on the expectation for other component types. Also, need to change the phrase "corrective action can be taken" to "corrective action can be initiated", consistent with the Supplementary Reference document. 5. VSL for R1 - Sub-requirement R1.3 appears to be missing. 6. Also, it's unclear to us what the expectation is for compliance documentation for "monitoring attributes and related maintenance activities" in R1.4 and "calibration tolerances or other equivalent parameters" in R1.5. This is fairly straightforward for relays, but not for other component types. 7. VSL for R4 - More clarity must be provided on the expectation for compliance documentation. This is a High VRF requirement, and there may only be a small number of maintenance-correctable items, hence a significant exposure to an extreme penalty. 8. There are typographical errors on the FAQ Requirements Flowchart (should

Voter	Entity	Segment	Vote	Comment
				be R4.1.1 and R4.1.2 instead of R4.4.1 and R4.4.2). 9. We have previously commented that the FAQ and Supplementary Reference documents should be made part of this standard. If that cannot be done, then more of the information in those documents needs to be included in the requirements in the standard to provide clarity. Compliance will only be measured against what is in the standard, and we need more clarity.

Response: **Thank you for your comments.**

1. **The SDT has determined that the fundamental concerns of Requirement R1, Part 1.5 and the associated changes are addressed within the PSMP definition, and that Requirement R1, Part 1.5 is not necessary; therefore, it has been removed. Requirement R4 has also been re-drafted to address various related concerns noted within comments. The associated VSL has also been revised. Please see Supplementary Reference Document, Section 8 for a discussion of this.**

2. **Requirement R4 has also been re-drafted to address various related concerns noted within comments. The associated VSL has also been revised. Please see Supplementary Reference Document, Section 8 for a discussion of this.**

3. **The SDT has provided examples of the sort of evidence that may serve to demonstrate compliance. The degree to which any single evidence type is sufficient is dependent on the completeness of the evidence itself. The Measure has been modified to clarify this point.**

4. **Table 2 has been modified to be clearer. "Taken" has been replaced with "Initiation" in consideration of your comment.**

5. **The High VSL for Requirement R1 has been revised in consideration of your comment.**

6. **The issues of "monitoring attributes" are discussed within Section 15.7 of the Supplementary Reference Document. As for Requirement R1, Part 1.5, the SDT has determined that the fundamental concerns of Requirement R1, Part 1.5 and the associated changes are addressed within the PSMP definition, and that Requirement R1, Part 1.5 is not necessary; therefore, it has been removed. Requirement R4 has also been re-drafted to address various related concerns noted within comments. The associated VSL has also been revised. Please see Supplementary Reference Document, Section 8 for a discussion of this.**

7. **Examples of compliance documentation are included within Measure M4 and discussed within various clauses of the FAQ and within Section 15.7 of the Supplementary Reference Document.**

8. **The SDT decided to eliminate the FAQ document and incorporate the FAQ's contents into the Supplementary Reference Document as appropriate. The SDT considered your comments during this activity.**

9. **The SDT decided to eliminate the FAQ document and incorporate the FAQ's contents into the Supplementary Reference Document as appropriate. The SDT believes the entities should be able to implement the standard without the Supplementary Reference. However, the SDT is also convinced that many entities may find the supporting discussion rationale etc useful particularly to assist them in implementing the standard in an efficient manner.**

Voter	Entity	Segment	Vote	Comment
Joel T Plessinger	Entergy	3	Negative	The restructured tables are generally much clearer and the SDT is to be commended on their efforts. 1. However, we believe the Alarming Point Table needs additional clarification with regard to the Maximum Maintenance Interval. If an "alarm producing device" is considered to be a device such as an SCADA RTU, individual entity intervals for such a device would differ, and there isn't necessarily a maximum interval established as there is for Protection System components. Also, if an entity's alarm producing device maintenance is performed in sections and triggered by segment or component maintenance, there would essentially be multiple maximum intervals for the alarm producing device of that entity. On that basis, we suggest the interval verbiage be revised to "When alarm producing device or system is verified, or by sections as per the monitored component/protection system specified maximum interval as applicable". Alternately, if the intention is to establish maximum intervals as simply being no longer than the individual component maintenance intervals as we suggest for inclusion above, then the verbiage should be revised to "When alarm producing component/protection system segment is verified". In either case are we to interpret monitored components with attributes which allow for no periodic maintenance specified as not requiring periodic alarm verification? 2. R1.5 calls for "identification of calibration tolerances or equivalent parameters..." whereas the associated VSL references "failure to establish calibration criteria...." and is listed as high. If R1.5 is to be included in this standard, then we suggest the severity level of a failure to simply "identify" or document such calibration tolerances would be analogous to the severity level(s) of a "failure to specify one (or the severity level should be consistent with the other elements of R1. Both cases appear to be more of a documentation issue as opposed to a failure to implement. Shouldn't a failure to implement any necessary calibration tolerance be accounted for in R4? R1.5 calls for "identification of calibration tolerances or equivalent parameters for each Protection System Component Type....". 3. We believe the Supplementary Reference document should provide additional information and examples of calibration tolerances or equivalent parameters which would be expected for the various component types. Especially for any "equivalent" parameters which would be required for compliance for a component type besides protective relays. Adding Requirement 1.5 is a significant revision and raises questions as to how broadly an accuracy or equivalent parameter requirement and associated

Voter	Entity	Segment	Vote	Comment
				documentation would need to be addressed by entities and/or will be measured for compliance. Discussion on this new requirement does not seem to be addressed anywhere in the FAQ or Supplementary Reference documents. Additionally, to the best of our knowledge, the need for such a requirement was not brought up as a concern or comment on the prior draft version of this standard, and in the context of a requirement need, we don't believe it has been attributed to or actually poses any significant reliability risk. We do not believe this requirement is justified.
Response: **Thank you for your comments.** **1. The Maximum Maintenance Interval column entry in Table 2 has been revised to state, "When alarm producing Protection System component is verified" to clarify this.** **2. The SDT has determined that the fundamental concerns of Requirement R1, Part 1.5 and the associated changes are addressed within the PSMP definition, and that Requirement R1, Part 1.5 is not necessary; therefore, it has been removed. Requirement R4 has also been re-drafted to address various related concerns noted within comments. The associated VSL has also been revised. Please see Supplementary Reference Document, Section 8 for a discussion of this.** **3. The SDT has determined that the fundamental concerns of Requirement R1, Part 1.5 and the associated changes are addressed within the PSMP definition, and that Requirement R1, Part 1.5 is not necessary; therefore, it has been removed. Requirement R4 has also been re-drafted to address various related concerns noted within comments. The associated VSL has also been revised. Please see Supplementary Reference Document, Section 8 for a discussion of this.**				
Kevin Querry	FirstEnergy Solutions	3	Negative	Please see FirstEnergy's comments submitted separately through the comment period posting.
Response: **Thank you for your comments. Please see our responses to your comments from the formal comment period.**				
Lee Schuster	Florida Power Corporation	3	Negative	Implementation Plan for PRC-005-2 1. Since R2, R3, and R4 requirements would be performed after establishment of the program documentation, an additional year should be added to all implementation dates for Requirements R2, R3, and R4 as shown below: • Maintenance on components with intervals less than one year must be completed within two years after applicable regulatory approval (within one year of completion of R1 Program Documentation). • Maintenance on components with intervals between one year and two years must be completed within three years after applicable regulatory approval (within two years of completion of R1 Program Documentation). • Maintenance on components with intervals of six years must be completed within three-, five-, and seven-year milestones after

Voter	Entity	Segment	Vote	Comment
				applicable regulatory approval (within two, four, and six years of completion of R1 Program Documentation). • Maintenance on components with intervals of twelve years must be completed within five-, nine-, and thirteen-year milestones after applicable regulatory approval (within four, eight, and twelve years of completion of R1 Program Documentation). Standard PRC-005-02 1. 2. Table 1-2: Rows 1 and 2 require different intervals for the activity "Verify essential signals to and from Protection System components." Unless these inputs and outputs are monitored for Row 2, it would seem that they should be performed at the same interval for both Rows 1 and 2. Therefore, EITHER: • Row 1 should be broken into the following three activities: • 3 months - Verify communications system is functional • 6 years - Verify channel meets performance criteria • 12 years - Verify essential signals to and from other Protection System components OR: • Row 2 should be broken into the following two activities: • 12 years - Verify channel meets performance criteria • 6 years - Verify essential signals to and from other Protection System components 3. Table 1-4: Only Row 1 addresses dc supplies associated with UFLS or UVLS systems. All other rows state that UFLS or UVLS systems are excluded. What is required to "Verify dc supply voltage" for the UFLS/UVLS systems? Does it require that the overall station battery voltage be checked or just the dc voltage available to the UFLS/UVLS circuit of interest? If a voltage measurement is taken at the UFLS/UVLS circuit (e.g., in distribution breaker cabinet), can the batteries/chargers at these facilities be excluded from the PRC-005-2 scope as long as they do not also supply transmission-related protection? 4. PRC-005-2 FAQ's Document Section V.1.A, Example #2: The instrument transformer should be classified as "unmonitored" not "monitored."

Response: **Thank you for your comments.**

1. **The Implementation Plan for Requirement R1 has been changed from 12 months to 15 months in consideration of your comment. The Implementation Plan for Requirement R4 has been revised to add one year to all established dates.**
2. **The first and second rows differ in that the first row is for unmonitored communications systems, and the second row is for monitored communications systems. The activities in both rows are appropriate and correct.**
3. **Table 1-4 has been completely re-structured. For station dc supply for only UFLS/UVLS, the only activity is to verify the dc**

Voter	Entity	Segment	Vote	Comment
voltage. 4. **The SDT decided to eliminate the FAQ document and incorporate the FAQ's contents into the Supplementary Reference Document as appropriate. The SDT considered your comments during this activity.**				
Anthony L Wilson	Georgia Power Company	3	Negative	Reference the new Requirements R.1.5 and R.4.2 which are new to this posting: R.1.5 requires the Owners to "identify calibration tolerances or other equivalent parameters for each Protection System component type" is too intrusive and divisive for what it brings to the reliability of the BES. The entire SDT needs to thoroughly discuss these new requirements and modify or delete them. Note: We have also made various requests for clarification to the FAQ and Supplemental Reference document in our Response to Comments which we are not including here.
Response: **Thank you for your comments. The SDT has determined that the fundamental concerns of Requirement R1, Part 1.5 and the associated changes are addressed within the PSMP definition, and that Requirement R1, Part 1.5 is not necessary; therefore, it has been removed. Requirement R4 has also been re-drafted to address various related concerns noted within comments. The associated VSL has also been revised. Please see Supplementary Reference Document, Section 8 for a discussion of this.**				
Michael D. Penstone	Hydro One Networks, Inc.	3	Negative	1. The added requirement R1, Part 1.5 is vague and needs clarification. It is not clear what "Identify calibration tolerances or other equivalent parameters" means and as written will be subject to different interpretations by entities and compliance enforcement personnel. The addition of this new part of Requirement R1 that requires the Owners to "identify calibration tolerances or other equivalent parameters for each Protection System component type" is onerous and contributes little to the reliability of the BES. 2. Changes introduced to the Implementation Plan since the last posting are not consistent with respect to jurisdictions where no regulatory approval is required. The previously posted implementation for Requirement R1 required entities to be 100% compliant on the first day of the first calendar quarter three months following applicable regulatory approvals, or in those jurisdictions where no regulatory approval is required, on the first day of the first calendar quarter six months following Board of Trustees adoption. The amended implementation plan changed the three-month time to twelve months in jurisdictions with regulatory approval required but left the same six-month time for the others. For consistency, the six months timeframe should be changed to fifteen months.
Response: **Thank you for your comments.** 1. **The SDT has determined that the fundamental concerns of Requirement R1, Part 1.5 and the associated changes are addressed within the PSMP definition, and that Requirement R1, Part 1.5 is not necessary; therefore, it has been removed. Requirement R4 has also been re-drafted to address various related concerns noted within comments. The associated VSL has also been revised. Please see Supplementary Reference Document, Section 8 for a discussion of this.**				

Voter	Entity	Segment	Vote	Comment
2. In consideration of your comment, "six" has been modified to "twelve" in the Implementation Plan for Requirement R1, making it consistent with the remainder of the Implementation Plan.				
Garry Baker	JEA	3	Negative	JEA will be voting no on PRC-005-2 because of the following: 1. In Table 1-1 for electromechanical trip or auxiliary devices requires verification of operation as opposed to verify ability to operate that was specified on trip coils. I believe it should be ability to operate in each case. 2. Between Table 1-1 and Tables 1-5 essentially would require full functional test of each station every 12 years.
Response: **Thank you for your comments.** **1. The distinction in Table 1-5 is correct and as intended by the SDT.** **2. A full functional test is one means of completing the required activities, but other methods are also acceptable. See Sections 8 and 15.3 of the Supplementary Reference Document for additional discussion.**				
Mace Hunter	Lakeland Electric	3	Negative	1. Table 1-4 requires a comparison of measured battery internal ohmic value to battery baseline. Since battery manufacturers do not provide this value, it is unclear what the "baseline" values ought to be if an entity recently began performing this test (assuming it's several years after the commissioning of the battery.) Would it be acceptable for an entity to establish baseline values based on statistical analysis of multiple test results specific to a given battery manufacturer and design? 2. Lakeland feels that the SDT should have taken into consideration numerous comments previously made regarding general concerns with testing Control Circuitry in energized substations. We agree that this can negatively impact reliability and would like to emphasize the following: • Small entities with only one or two BES substations may not have enough components to take advantage of the expanded maintenance intervals afforded by a performance-based maintenance program. Aggregating these components across different entities doesn't seem too logical considering the variations at the sub-component level (wire gauge, installation conditions, etc.) • Trip circuits are interconnected to perform various functions. Testing a trip path may involve disabling other features (i.e. breaker failure or reclosing) not directly a part of the test being performed. Temporary modifications made for testing introduce a chance to unknowingly leave functions disabled, contacts shorted, jumpers lifted, etc. after testing has been completed. Trip coils and cable runs from panels to breaker can be made to meet the requirements for monitored components. The only portions of the circuitry where this may not be the case is in the inter and intra-panel

Voter	Entity	Segment	Vote	Comment
				wiring. Because such portions of the circuitry have no moving parts and are located inside a control house, the exposure is negligible and should not be covered by the requirements. Entities will be at increased compliance risk as they struggle to properly document the testing of all parallel tripping paths. 3. Applicability, 4.2.1, should reflect the Y&W and Tri-State interpretation (Project 2009-17) of "transmission Protection System" and should state: "Protection Systems applied on, or designed to provide protection for a BES Facility and that trips a BES Facility" 4. Applicability, 4.2. - does not reflect the interpretation of Project 20009-10 that excludes non-electrical protection (e.g., sudden pressure relays) and auxiliary relays. Because the definition of Protection System (recently approved) does not clearly exclude "non-electrical" protection,the Applicability section should. For instance,, a vibration monitor, steam pressure, etc. protection of generators, sudden pressure protection of transformers, etc. should not be included in the standard. An alternative is to change the definition of Protection System to make sure it only includes electrical 5. the VRF of R1 should be Low since the attached tables are essentially the PSMP.

Response: **Thank you for your comments.**

1. **Typical baseline values for various types of lead-acid batteries can be obtained from the test equipment manufacturer, perhaps the battery vendor, and perhaps other sources for batteries that are already in service. For new batteries, the initial battery baseline ohmic values should be measured upon installation and used for trending.**
2. **A) Entities are not required to use performance-based maintenance programs. Requirement R3 and Attachment A are provided for the use of entities that can (and desire to) avail themselves of this approach.**

   B) The requirement relative to control circuitry does not explicitly require trip or functional testing of the entire path; it requires that entities verify all paths without specifying the method of doing so. Please see Section 15.5 of the Supplementary Reference Document for detailed discussion.
3. **This interpretation is not yet approved by FERC. When this interpretation is approved, the SDT will incorporate it within PRC-005-2. However, the SDT has made changes to Applicability 4.2.1 in consideration of your comments.**
4. **The recently-balloted revision of the definition of Protection System, which has been approved by the NERC Board of Trustees and will soon be filed with FERC for approval, clearly includes only protective relays that respond to electrical quantities. As for auxiliary relays, the interpretation to which you refer states that they are not explicitly included, but are included to the degree that an entity's Protection System control circuitry addresses them(which has been identified as a reliability gap), and are being added to PRC-005-2 to resolve the gap.**

Voter	Entity	Segment	Vote	Comment
5. The SDT disagrees; the Tables establish the intervals and activities, and R1 addresses the establishment of an entities' individual PSMP.				
Bruce Merrill	Lincoln Electric System	3	Affirmative	While the proposed draft of the standard is acceptable as currently written, LES would like the drafting team to consider the following comments. (1) Table 1-1 should state "Test and calibrate (if necessary)" in the first section under activities. If a relay passes the test, there is no need to calibrate it. Therefore, not all relays will require calibration. (2) Please explain the drafting team's reason for not checking the trip coils of breakers in the UFLS/UVLS schemes but ensuring that all others are operated every six years. It would appear that they can all be lumped into the same group one way or another. (3) In regards to Specific Gravity Testing, many people do not perform the specific gravity test routinely if they perform the individual cell internal ohmic test routinely. LES asks the drafting team to consider allowing the internal cell ohmic test as a substitute for the specific gravity test.
Response: **Thank you for your comments.** **1. Table 1-1 has been modified as you suggest.** **2. This is an intentional difference between UFLS/UVLS and the remainder of the Protection Systems addressed within the Standard, because of the distributed nature of UFLS/UVLS and because these devices are usually tripping distribution system elements.** **3. Table 1-4 does not specify specific gravity testing.**				
Charles A. Freibert	Louisville Gas and Electric Co.	3	Negative	LG&E and KU Energy LLC appreciate the hard work and efforts of the Standards Drafting Team in reaching this point in the standards development process. The basis for the negative vote is the addition of Requirement R1.5 (calibration tolerances) and R4.2 to the standard. This requirement will provide the opportunity for auditors to decide if the testing criteria for whether a relay passes a test or not is acceptable. LG&E and KU Energy recommend that Requirement R1.5 be deleted from the standard.
Response: **Thank you for your comments. The SDT has determined that the fundamental concerns of Requirement R1, Part 1.5 and the associated changes are addressed within the PSMP definition, and that Requirement R1, Part 1.5 is not necessary; therefore, it has been removed. Requirement R4 has also been re-drafted to address various related concerns noted within comments. The associated VSL has also been revised. Please see Supplementary Reference Document, Section 8 for a discussion of this.**				
Greg C. Parent	Manitoba Hydro	3	Negative	1. -Implementation Plan (Timeline) for R1: In areas not requiring regulatory approval, the 6 month time frame proposed for R1 is not achievable and is not consistent with areas requiring regulatory approval. To be consistent, the effective date for R1 in jurisdictions where no regulatory approval is required should be the first day of the first calendar quarter 12 months after BOT approval.

Voter	Entity	Segment	Vote	Comment
				2. - VSLs: The high VSL for R1 "Failed to include all maintenance activities relevant for the identified monitoring attributes specified in Tables 1-1 through 1-5" may be interpreted in different ways and should be further clarified. 3. -Table 1-4: The requirements for batteries listed in Table 1-4 do not appear to be consistent with the comments in the FAQ Section (V 1A Example 1). Please see comments submitted during the formal comment period for further detail. 4. -Table 1-4: The requirement for a 3 month check on electrolyte level seems too frequent based on our experience. We would like to point out that although IEEE std 450 (which seems to be the basis for table 1-4) does recommend intervals it also states that users should evaluate these recommendations against their own operating experience.
Response: **Thank you for your comments.** **1. In consideration of your comment, "six" has been modified to "twelve" in the Implementation Plan for Requirement R1, making it consistent with the remainder of the Implementation Plan.** **2. The SDT does not understand your concern; further details are needed.** **3. The SDT decided to eliminate the FAQ document and incorporate the FAQ's contents into the Supplementary Reference Document as appropriate. The SDT considered your comments during this activity.** **4. The SDT believes that the 3-month interval specified in the Standard is appropriate.**				
Don Horsley	Mississippi Power	3	Negative	Reference the new Requirements R.1.5 and R.4.2 which are new to this posting: R.1.5 requires the Owners to "identify calibration tolerances or other equivalent parameters for each Protection System component type" is too intrusive and divisive for what it brings to the reliability of the BES. The entire SDT needs to thoroughly discuss these new requirements and modify or delete them. Note: We have also made various requests for clarification to the FAQ and Supplemental Reference document in our Response to Comments which we are not including here.
Response: **Thank you for your comments. The SDT has determined that the fundamental concerns of Requirement R1, Part 1.5 and the associated changes are addressed within the PSMP definition, and that Requirement R1, Part 1.5 is not necessary; therefore, it has been removed. Requirement R4 has also been re-drafted to address various related concerns noted within comments. The associated VSL has also been revised. Please see Supplementary Reference Document, Section 8 for a discussion of this.**				
Michael Schiavone	Niagara Mohawk (National Grid Company)	3	Negative	This new Requirement as written subjects the Transmission Owner, Generation Owner or Distribution Provider to vague interpretations of what the requirement means by compliance officials. The addition of the new part of Requirement R1 that requires the Owners to "identify calibration tolerances or other equivalent parameters for each Protection System component type" is too intrusive and divisive for what it brings to the reliability of the BES.

Voter	Entity	Segment	Vote	Comment
Response: **Thank you for your comments. The SDT has determined that the fundamental concerns of Requirement R1, Part 1.5 and the associated changes are addressed within the PSMP definition, and that Requirement R1, Part 1.5 is not necessary; therefore, it has been removed. Requirement R4 has also been re-drafted to address various related concerns noted within comments. The associated VSL has also been revised. Please see Supplementary Reference Document, Section 8 for a discussion of this.**				
Sam Waters	Progress Energy Carolinas	3	Negative	4. Implementation Plan for PRC-005-2 Since R2, R3, and R4 requirements would be performed after establishment of the program documentation, an additional year should be added to all implementation dates for Requirements R2, R3, and R4 as shown below: • Maintenance on components with intervals less than one year must be completed within two years after applicable regulatory approval (within one year of completion of R1 Program Documentation). • Maintenance on components with intervals between one year and two years must be completed within three years after applicable regulatory approval (within two years of completion of R1 Program Documentation). • Maintenance on components with intervals of six years must be completed within three-, five-, and seven-year milestones after applicable regulatory approval (within two, four, and six years of completion of R1 Program Documentation). o Maintenance on components with intervals of twelve years must be completed within five-, nine-, and thirteen-year milestones after applicable regulatory approval (within four, eight, and twelve years of completion of R1 Program Documentation). Standard PRC-005-02 1. 5. Table 1-2: 1. Rows 1 and 2 require different intervals for the activity "Verify essential signals to and from Protection System components." Unless these inputs and outputs are monitored for Row 2, it would seem that they should be performed at the same interval for both Rows 1 and 2. Therefore, EITHER: • Row 1 should be broken into the following three activities: • 3 months - Verify communications system is functional • 6 years - Verify channel meets performance criteria • 12 years - Verify essential signals to and from other Protection System components OR: • Row 2 should be broken into the following two activities: • 12 years - Verify channel meets performance criteria • 6 years - Verify essential signals to and from other Protection System components. 6. Table 1-4: Only Row 1 addresses dc supplies associated with UFLS or UVLS systems. All other rows state that UFLS or UVLS systems are excluded. What

Voter	Entity	Segment	Vote	Comment
				is required to "Verify dc supply voltage" for the UFLS/UVLS systems? Does it require that the overall station battery voltage be checked or just the dc voltage available to the UFLS/UVLS circuit of interest? If a voltage measurement is taken at the UFLS/UVLS circuit (e.g., in distribution breaker cabinet), can the batteries/chargers at these facilities be excluded from the PRC-005-2 scope as long as they do not also supply transmission-related protection? 7. PRC-005-2 FAQ's Document Section V.1.A, Example #2: The instrument transformer should be classified as "unmonitored" not "monitored."
Response: **Thank you for your comments.** **4. The Implementation Plan for Requirement R1 has been changed from 12 months to 15 months in consideration of your comment. The Implementation Plan for Requirement R4 has been revised to add one year to all established dates.** **5. The first and second rows differ in that the first row is for unmonitored communications systems, and the second row is for monitored communications systems. The activities in both rows are appropriate and correct.** **6. Table 1-4 has been completely re-structured. For station dc supply for only UFLS/UVLS, the only activity is to verify the dc voltage.** **7. The SDT decided to eliminate the FAQ document and incorporate the FAQ's contents into the Supplementary Reference Document as appropriate. The SDT considered your comments during this activity.**				
Jeffrey Mueller	Public Service Electric and Gas Co.	3	Negative	The PSEG Companies do not agree with the Facilities as currently described in section 4.2.5.5. Please refer to detailed comments provided in our formal Comment Form.
Response: **Thank you for your comments. In response to many comments, including yours, the SDT has removed 4.2.5.5 from the Applicability of the standard.**				
Anthony Schacher	Salem Electric	3	Negative	Battery testing methodologies are too specific and don't allow for different substation battery configurations.
Response: **Thank you for your comments. The SDT disagrees; the requirements within Table 1-4 establish the minimum maintenance activities required to assure that station dc supply of various technologies and configurations will perform as intended without unnecessarily prescribing specific methodologies.**				
Dana Wheelock	Seattle City Light	3	Negative	Comment: The proposed Standard PRC-005-2 is an improvement over the previous draft in that it provides more consistency in maintenance and testing duration internals. Notwithstanding, two issues are of concern to Seattle City Light such that it is compelled to vote no: 1) the establishment of bookends for standard verification and 2) the implementation timelines for entities with systems where electro-mechanical

Voter	Entity	Segment	Vote	Comment
				relays still compose a significant number of components in their protection systems. Bookends: Proposed Standard PRC-005-2 specifies long inspection and maintenance intervals, up to 12 years, which correspondingly exacerbates the so-called "bookend" issue. To demonstrate that interval-based requirements have been met, two dates are needed - bookends. Evidencing an initial date can be problematic for cases where the initial date would occur prior to the effective date of a standard. NERC has provided no guidance on this issue, and the Regions approach it differently. Some, such as Texas Regional Entity, require initial dates beginning on or after the effective date of a Standard. Compliance with intervals is assessed only once two dates are available that occur on or after a standard took effect. Other regions, such as Western Electricity Coordinating Council (WECC), require that entities evidence an initial date prior to the effective date of a standard. For WECC, compliance with intervals is assessed as soon as a standard takes effect. Such variation makes application of standards involving bookends uncertain, arbitrary, capricious, and in the case of WECC, possibly illegal. Proposed Standard PRC-005-2 will be another such standard. Indeed this Standard will involve by far the largest number of bookends of any NERC standard - many thousands for a typical entity. Furthermore, the long inspection and maintenance intervals introduced in the draft will require entities in WECC, for instance, to evidence initial bookend dates prior to the date original PRC-005-1 took effect. For the 12-year intervals for CTs and VTs in proposed Standard PRC-005-2, many initial dates will occur prior to the 2005 Federal Power Act that authorized Mandatory Reliability Standards and even reach back before the 2003 blackout that catalyzed the effort to pass the Federal Power Act. As a result, many entities in WECC maybe at risk of being found in violation of proposed Standard PRC-005-2 immediately upon its implementation. Seattle City Light requests that NERC address the bookends issue, either within proposed Standard PRC-005-2 or in a separate, concurrent document. 2) Legacy Systems: Many entities still have legacy protection systems that rely upon electro-mechanical relays. Effective testing approaches differ between electro-mechanical and digital relay systems. Thus, although the proposed standard rightly looks to the future of digital relays by specifying testing and maintenance focused on protection systems as a whole, the proposed implementation timelines create a level of hardship for those utilities with legacy systems. In example, auxiliary relay and trip coil testing may be essential to prove the correct operation of complex, multi-function digital protection systems. However, for legacy systems with single-function

Voter	Entity	Segment	Vote	Comment
				electro-mechanical components, the considerable documentation and operational testing needed to implement and track such testing is not necessarily proportional to the relative risk posed by the equipment to the bulk electric system. Performance testing of electro-mechanical systems, particularly regarding control circuits, will require extensive disconnection and reconnection of portions of the circuits. Such activities will likely cause far more problems on restoration-to-service than they will locate and correct. As such, to assist entities in their implementation efforts, we believe provision of alternatives are necessary, such as additional implementation time through phasing and/or through technical feasibility exceptions.
Response: **Thank you for your comments.** **1. This issue has been addressed by NERC in Compliance Application Notice CAN-008 "PRC-005 R2 Pre-June 18 Evidence". Please see Sections 8 and 15.3 of the Supplementary Reference Document for a discussion on this topic.** **2. FERC Order 693 directs that NERC establish requirements for the maintenance of the Protection System and control circuitry is a portion thereof. Therefore, requirements for the maintenance of the control circuitry are necessary and the SDT has developed those requirements in a fashion that affords entities with the opportunity to best meet those requirements.**				
James R. Keller	Wisconsin Electric Power Marketing	3	Negative	Q4: Table 1-4 requires an activity to verify the state of charge of battery cells. There are no possible options for meeting this requirement listed in the FAQ document. Unlike other terms used in the standard, this term is not mentioned or defined in the FAQ. To comply with this standard, the SDT needs to provide more guidance. For example, for VLA batteries the measured specific gravity could indicate state of charge. For VRLA batteries, it is not as clear how to determine state of charge, but possibly this can be determined by monitoring the float current.
Response: **Thank you for your comments. The SDT decided to eliminate the FAQ document and incorporate the FAQ's contents into the Supplementary Reference Document as appropriate. The SDT considered your comments during this activity. Table 1-4 has been revised to remove "state of charge" from the activities.**				
Michael Ibold	Xcel Energy, Inc.	3	Negative	See comments under the Transmission segment.
Response: **Thank you for your comments. Please see our responses to your comments from the Transmission segment.**				
Kenneth Goldsmith	Alliant Energy Corp. Services, Inc.	4	Negative	We are concerned with this paragraph being interpreted differently by the various regions and thereby causing a large increase in scope for Distribution Provider protection systems beyond the reach of UFLS or UVLS. i. Protection Systems applied on, or designed to provide protection for, the BES. The description is vague and open for different interpretations for what is "applied

Voter	Entity	Segment	Vote	Comment
				on" or "designed to provide protection". According to the November 17, 2010 Draft Supplementary Reference page 4, the Standard will not apply to sub-transmission and distribution circuits, but will apply to any Protection System that is designed to detect a fault on the BES and take action in response to the fault. The Standard Drafting Team does not feel that Protection Systems designed to protect distribution substation equipment are included in the scope of this standard; however, this will be impacted by the Regional Entity interpretations of 'protecting" the BES. Most distribution protection systems will not react to a fault on the BES, but are caught up in the interpretation due to tripping a breaker(s) on the BES.
Response: **Thank you for your comments. Applicability 4.2.1 has been revised to remove "applied on". The SDT believes that this addresses your concern. Applicability 4.2.2 and 4.2.3, respectively, address UFLS and UVLS specifically, and are not related to 4.2.1. The Supplementary Reference Documentation has been revised to clarify.**				
David Frank Ronk	Consumers Energy	4	Negative	1. Table 1-3 states, "are received by the protective relays". Does this require that the inputs to each individual relay must be checked, or is it sufficient to verify that acceptable signals are received at the relay panel, etc? 2. Relative to Table 1-5, the activities will likely require that system components be removed from service to complete those activities. If the changes to the BES definition (per the FERC Order) causes system elements such as 138 kV connected distribution transformers to be considered as BES, these components can not be removed from service for maintenance without outaging customers. The standard must exempt these components from the activities of Table 1-5 if the activity would result in deenergizing customers. 3. For the component types addressed in Tables 1-3 and 1-5, the requirements may cause entities to identify components very differently than they are currently doing, and doing so may take several years to complete. The Implementation Plan for R1 and R4 is too aggressive in that it may not permit entities to complete the identification of discrete components and the associated maintenance and implement their program as currently proposed. We propose that the Implementation Plan specifically address the components in Table 1-3 and 1-5 with a minimum of 3 calendar years for R1 and 12 calendar years after that for R4. 4. As for the interval in Table 1-4 regarding the battery terminal connection resistance, we believe that an 18-month interval is excessively frequent for this

Voter	Entity	Segment	Vote	Comment
				activity, and suggest that it be moved to the 6-calendar-year interval. 5. In Table 1-4, we currently re-torque all of the battery terminal connections every 4-years, rather than measuring the terminal connection resistance to determine if the connections are sound. Disregarding the interval, would this activity satisfy the "verify the battery terminal connection resistance" activity?
Response: **Thank you for your comments.** 1. **The SDT intends that the voltage and current signals properly reach each individual relay, but there may be several methods of accomplishing this activity.** 2. **This concern seems more properly to be one to be addressed during the activities to develop the new BES definition, rather than within PRC-005-2.** 3. **The Implementation Plan for Requirement R1 has been modified from "six" months to "twelve" months. The standard has also been modified (Requirement R1, Part 1.1) to not specifically require identification of all Individual Protection System components. The Implementation Plan for Requirement R4 has been revised to add one year to all established dates.** 4. **IEEE 450, 1188, and 1106 all recommend this activity at a 12-month interval. Please see Clause 15.4.1 of the Supplementary Reference Document for a discussion of this activity.** 5. **Re-torqueing the battery terminals would not meeting this requirement.**				
Frank Gaffney	Florida Municipal Power Agency	4	Negative	1. UFLS and UVLS maintenance and testing is greatly expanded, e.g., we interpreted PRC-008/011 as being only the UFLS/UVLS equipment. The new PRC-005 sweeps in other protection system components, e.g., communications (probably not applicable), voltage and current sensing devices (e.g., instrument transformers), Station DC supply, control circuitry. What's key about this is that these components are all part of distribution system protection, so, these activities would not be covered by other BES protection system maintenance and testing. I'm sure we are testing batteries and the like, but, we are probably not testing battery chargers and control circuity, and, in many cases distribution circuits are such that it is very difficult, if not impossible, to test control circuitry to the trip coil of the breaker without causing an outage of the customers on that distribution circuit. There is no real reliability need for this either. Unlike Transmission and Generation Protection Systems which are needed to clear a fault and may only have one or two back-up systems, there are thousands and thousands of UFLS relays and if one fails to operate, it will not be noticeable to the event. It does make sense to test the relays themselves in part to

Voter	Entity	Segment	Vote	Comment
				ensure that the regionsl UFLS program is being met, but, to test the other protection system components is not worthwhile. Note that DC Supplies and most of the control circuitry of distribution lines are "tested" frequently by distribution circuits clearing faults such as animals, vegetation blow-ins, lightning, etc., on distribution circuits, reducing the value of testing to just about null. However, this version is better than prior versions because it essentially requires the entity to determine it's own period of maintenance and testing for UFLS/UVLS for DC Supply and control circuitry. 2. Applicability, 4.2.1, should reflect the Y&W and Tri-State interpretation (Project 2009-17) of "transmission Protection System" and should state: "Protection Systems applied on, or designed to provide protection for a BES Facility and that trips a BES Facility" 3. Applicability, 4.2. - does not reflect the interpretation of Project 20009-10 that excludes non-electrical protection (e.g., sudden pressure relays) and auxiliary relays. Because the definition of Protection System (recently approved) does not clearly exclude "non-electrical" protection,the Applicability section should. For instance,, a vibration monitor, steam pressure, etc. protection of generators, sudden pressure protection of transformers, etc. should not be included in the standard. An alternative is to change the definition of Protection System to make sure it only includes electrical the VRF of R1 should be Low since the attached tables are essentially the PSMP.

Response: **Thank you for your comments.**

1. **For UFLS and UVLS, the maintenance activities related to station dc supply and control circuitry are somewhat constrained relative to similar activities for Protection Systems in general. Regardless, without proper functioning of these component types, UFLS and UVLS will not respond as expected, and will therefore degrade BES system reliability, particularly during the stressed system conditions for which UFLS and UVLS are installed. Relative to control circuitry, Table 1-5 specifically excludes UFLS and UVLS from maintenance activities related to the interrupting device trip coil.**
2. **This interpretation is not yet approved by FERC. When this interpretation is approved, the SDT will incorporate it within PRC-005-2. However, the SDT has made changes to Applicability 4.2.1 in consideration of your comments.**
3. **The recently-balloted revision of the definition of Protection System, which has been approved by the NERC Board of Trustees and will soon be filed with FERC for approval, clearly includes only protective relays that respond to electrical quantities. As for auxiliary relays, the interpretation to which you refer states that they are not explicitly included, but are included to the degree that an entity's Protection System control circuitry addresses them(which has been identified as a reliability gap), and are being added to PRC-005-2 to resolve the gap.**

Voter	Entity	Segment	Vote	Comment
Thomas W. Richards	Fort Pierce Utilities Authority	4	Negative	1. UFLS and UVLS maintenance and testing is greatly expanded, e.g., we interpreted PRC-008/011 as being only the UFLS/UVLS equipment. The new PRC-005 sweeps in other protection system components, e.g., communications (probably not applicable), voltage and current sensing devices (e.g., instrument transformers), Station DC supply, control circuitry. What's key about this is that these components are all part of distribution system protection, so, these activities would not be covered by other BES protection system maintenance and testing. I'm sure we are testing batteries and the like, but, we are probably not testing battery chargers and control circuitry, and, in many cases distribution circuits are such that it is very difficult, if not impossible, to test control circuitry to the trip coil of the breaker without causing an outage of the customers on that distribution circuit. There is no real reliability need for this either. Unlike Transmission and Generation Protection Systems which are needed to clear a fault and may only have one or two back-up systems, there are thousands and thousands of UFLS relays and if one fails to operate, it will not be noticeable to the event. It does make sense to test the relays themselves in part to ensure that the regio0nsl UFLS program is being met, but, to test the other protection system components is not worthwhile. Note that DC Supplies and most of the control circuitry of distribution lines are "tested" frequently by distribution circuits clearing faults such as animals, vegetation blow-ins, lightning, etc., on distribution circuits, reducing the value of testing to just about null. However, this version is better than prior versions because it essentially requires the entity to determine it's own period of maintenance and testing for UFLS/UVLS for DC Supply and control circuitry. 2. Applicability, 4.2.1, should reflect the Y&W and Tri-State interpretation (Project 2009-17) of "transmission Protection System" and should state: "Protection Systems applied on, or designed to provide protection for a BES Facility and that trips a BES Facility" 3. Applicability, 4.2. - does not reflect the interpretation of Project 2009-10 that excludes non-electrical protection (e.g., sudden pressure relays) and auxiliary relays. Because the definition of Protection System (recently approved) does not clearly exclude "non-electrical" protection, the Applicability section should. For instance, a vibration monitor, steam pressure, etc. protection of generators, sudden pressure protection of transformers, etc. should not be included in the standard. An alternative is to change the definition of Protection System to make sure it only includes electrical 4. Table 1-4 requires a comparison of measured battery internal ohmic value to battery baseline. Battery manufacturers typically do not provide this value

Voter	Entity	Segment	Vote	Comment
				and one manufacturer states that the baseline test are to be performed after the battery has been in regular float service for 90 days. It is unclear how to comply with the requirement for the initial 90 days. Additionally, we would recommend that this requirement be modified to permit an entity to establish a "baseline" value based on statistical analysis of multiple test results specific to a given battery manufacturer/model. Several commenters previously expressed their concerns with performing capacity tests. While this may just be an entity's preference, allowing an entity to establish a baseline at some point beyond the initial installation period would give entities the option of using the internal resistance test in lieu of a capacity test. 5. Small entities with only one or two BES substations may not have enough components to take advantage of the expanded maintenance intervals afforded by a performance-based maintenance program. Aggregating these components across different entities doesn't seem too logical considering the variations at the sub-component level (wire gauge, installation conditions, etc.) 6. Trip circuits are interconnected to perform various functions. Testing a trip path may involve disabling other features (i.e. breaker failure or reclosing) not directly a part of the test being performed. Temporary modifications made for testing introduce a chance to accidentally leave functions disabled, contacts shorted, jumpers lifted, etc. after testing has been completed. Trip coils and cable runs from panels to breaker can be made to meet the requirements for monitored components. The only portions of the circuitry where this may not be the case is in the inter- and intra-panel wiring. Because such portions of the circuitry have no moving parts and are located inside a control house, the exposure is negligible and should not be covered by the requirements. Entities will be at increased compliance risk as they struggle to properly document the testing of all parallel tripping paths. The interconnected nature of tripping circuits will make it difficult to count the number of circuits consistently for the purpose of calculating a VSL.

Response: **Thank you for your comments.**

1. **For UFLS and UVLS, the maintenance activities related to station dc supply and control circuitry are somewhat constrained relative to similar activities for Protection Systems in general. Regardless, without proper functioning of these component types, UFLS and UVLS will not respond as expected, and will therefore degrade BES system reliability, particularly during the stressed system conditions for which UFLS and UVLS are installed. Relative to control circuitry, Table 1-5 specifically excludes UFLS and UVLS from maintenance activities related to the interrupting device trip coil.**
2. **This interpretation is not yet approved by FERC. When this interpretation is approved, the SDT will incorporate it within PRC-005-2. However, the SDT has made changes to Applicability 4.2.1 in consideration of your comments.**

Voter	Entity	Segment	Vote	Comment
3. The recently-balloted revision of the definition of Protection System, which has been approved by the NERC Board of Trustees and will soon be filed with FERC for approval, clearly includes only protective relays that respond to electrical quantities. As for auxiliary relays, the interpretation to which you refer states that they are not explicitly included, but are included to the degree that an entity's Protection System control circuitry addresses them(which has been identified as a reliability gap), and are being added to PRC-005-2 to resolve the gap. **4. Typical baseline values for various types of lead-acid batteries can be obtained from the test equipment manufacturer, perhaps the battery vendor, and perhaps other sources for batteries that are already in service. For new batteries, the initial battery baseline ohmic values should be measured upon installation and used for trending.** **5. Entities are not required to use performance-based maintenance programs. Requirement R3 and Attachment A are provided for the use of entities that can (and desire to) avail themselves of this approach.** **6. The requirement relative to control circuitry does not explicitly require trip or functional testing of the entire path; it requires that entities verify all paths without specifying the method of doing so. Please see Section 15.5 of the Supplementary Reference Document for detailed discussion.**				
Bob C. Thomas	Illinois Municipal Electric Agency	4	Negative	It is IMEA's understanding from interaction with other entities that Draft 3 provides significant improvement, but that key concerns raised by many entities on Draft 2 were not addressed. IMEA supports comments submitted by Florida Municipal Power Agency.
Response: **Thank you for your comments. Please see our responses to your comments submitted during the Formal Comment period..**				
Christopher Plante	Integrys Energy Group, Inc.	4	Negative	Reason for No Vote: 1. Implementation plan is too aggressive given the drastic changes from PRC-005-1 to PRC-005-2 2. The drastic changes don't appear to provide an incremental increase in the reliability of the BES 3. We support the MRO NSRS comments
Response: **Thank you for your comments.** **1. The SDT has carefully considered the changes that entities will be expected to make to their program in response to PRC-005-2 and provided an Implementation Plan that should be sufficient and provided a phase-in approach to permit entities to systemically implement the revised standard. The Implementation Plan for Requirement R4 has been revised to add one year to all established dates.** **2. FERC Order 693 and the approved SAR assign the SDT to develop a standard with maximum allowable intervals and minimum maintenance activities. The intervals and activities specified are believed by the SDT to be technically effective, in a fashion that benefits reliability and that may be consistently monitored for compliance.** **3. Please see our responses to MRO's NSRS comments on the Standard Comments.**				
Joseph G. DePoorter	Madison Gas and Electric Co.	4	Negative	The SDT has made great improvements with this Standard but please consider the following items. 1. Replace "affecting" with "protecting" in the purpose statement.

Voter	Entity	Segment	Vote	Comment
				2. 4.2.1 under Facilities, The description is vague and open for different interpretations for what is “applied on” or “designed to provide protection”. According to the November 17, 2010 Draft Supplementary Reference page 4, the Standard will not apply to sub-transmission and distribution circuits, but will apply to any Protection System that is designed to detect a fault on the BES and take action in response to the fault. The Standard Drafting Team does not feel that Protection Systems designed to protect distribution substation equipment are included in the scope of this standard; however, this will be impacted by the Regional Entity interpretations of ‘protecting” the BES. Most distribution protection systems will not react to a fault on the BES, but are caught up in the interpretation due to tripping a breaker(s) on the BES. Clarification is needed by the SDT that this does not include distribution assets (notwithstanding UFLS and UVLS). 3. Upon review, R1.4, R1.5, and R4.2 were added since the last posting. These are not needed and must of been added to the Standard from an outside sorce. The SDT was on the proper track to finalize this Standard. These requirements need to be left to the individual entities to determine the depth and breath of thier PMSP.
Response: **Thank you for your comments.** **1. The “Purpose” is defined by the SAR.** **2. Applicability 4.2.1 has been revised to remove “applied on”. The SDT believes that this addresses your concern. Applicability 4.2.2 and 4.2.3, respectively, address UFLS and UVLS specifically, and are not related to Applicability 4.2.1. The Supplementary Reference Documentation has been revised to clarify.** **3. The SDT has determined that the fundamental concerns of Requirement R1, Part 1.5 and the associated changes are addressed within the PSMP definition, and that Requirement R1, Part 1.5 is not necessary; therefore, it has been removed. Requirement R4 has also been re-drafted to address various related concerns noted within comments. The associated VSL has also been revised. Please see Supplementary Reference Document, Section 8 for a discussion of this.**				
Douglas Hohlbaugh	Ohio Edison Company	4	Negative	Please see FirstEnergy's comments submitted separately through the comment period posting.
Response: **Thank you for your comments. Please see our responses to your comments submitted during the Formal Comment period.**				
John D. Martinsen	Public Utility District No. 1 of Snohomish	4	Affirmative	The overly prescriptive nature of the PRC-005-2 provides greater implementation clarity. However it may be too onerous for Local Network that have demonstrated through studies that delayed clearing (that could be attributed to protection

Voter	Entity	Segment	Vote	Comment
	County			system maintenance and testing) events do not create reliability or cascading concerns.
Response: **Thank you for your comments. PRC-005-2 is applicable to Protection Systems that are designed to provide protection for BES elements, and uses the Compliance Registry to determine applicable entities. Contributions of BES elements to cascading, etc, are immaterial in this Applicability.**				
Hao Li	Seattle City Light	4	Negative	Comment: The proposed Standard PRC-005-2 is an improvement over the previous draft in that it provides more consistency in maintenance and testing duration internals. Notwithstanding, two issues are of concern to Seattle City Light such that it is compelled to vote no: 1) the establishment of bookends for standard verification and 2) the implementation timelines for entities with systems where electro-mechanical relays still compose a significant number of components in their protection systems. Bookends: Proposed Standard PRC-005-2 specifies long inspection and maintenance intervals, up to 12 years, which correspondingly exacerbates the so-called "bookend" issue. To demonstrate that interval-based requirements have been met, two dates are needed - bookends. Evidencing an initial date can be problematic for cases where the initial date would occur prior to the effective date of a standard. NERC has provided no guidance on this issue, and the Regions approach it differently. Some, such as Texas Regional Entity, require initial dates beginning on or after the effective date of a Standard. Compliance with intervals is assessed only once two dates are available that occur on or after a standard took effect. Other regions, such as Western Electricity Coordinating Council (WECC), require that entities evidence an initial date prior to the effective date of a standard. For WECC, compliance with intervals is assessed as soon as a standard takes effect. Such variation makes application of standards involving bookends uncertain, arbitrary, capricious, and in the case of WECC, possibly illegal. Proposed Standard PRC-005-2 will be another such standard. Indeed this Standard will involve by far the largest number of bookends of any NERC standard - many thousands for a typical entity. Furthermore, the long inspection and maintenance intervals introduced in the draft will require entities in WECC, for instance, to evidence initial bookend dates prior to the date original PRC-005-1 took effect. For the 12-year intervals for CTs and VTs in proposed Standard PRC-005-2, many initial dates will occur prior to the 2005 Federal Power Act that authorized Mandatory Reliability Standards and even reach back before the 2003 blackout that catalyzed the effort to pass the Federal Power Act. As a result, many entities in WECC maybe at

Voter	Entity	Segment	Vote	Comment
				risk of being found in violation of proposed Standard PRC-005-2 immediately upon its implementation. Seattle City Light requests that NERC address the bookends issue, either within proposed Standard PRC-005-2 or in a separate, concurrent document. 2) Legacy Systems: Many entities still have legacy protection systems that rely upon electro-mechanical relays. Effective testing approaches differ between electro-mechanical and digital relay systems. Thus, although the proposed standard rightly looks to the future of digital relays by specifying testing and maintenance focused on protection systems as a whole, the proposed implementation timelines create a level of hardship for those utilities with legacy systems. In example, auxiliary relay and trip coil testing may be essential to prove the correct operation of complex, multi-function digital protection systems. However, for legacy systems with single-function electro-mechanical components, the considerable documentation and operational testing needed to implement and track such testing is not necessarily proportional to the relative risk posed by the equipment to the bulk electric system. Performance testing of electro-mechanical systems, particularly regarding control circuits, will require extensive disconnection and reconnection of portions of the circuits. Such activities will likely cause far more problems on restoration-to-service than they will locate and correct. As such, to assist entities in their implementation efforts, we believe provision of alternatives are necessary, such as additional implementation time through phasing and/or through technical feasibility exceptions.
Response: **Thank you for your comments.** **1. This issue has been addressed by NERC in Compliance Application Notice CAN-008 "PRC-005 R2 Pre-June 18 Evidence". Please see Sections 8 and 15.3 of the Supplementary Reference Document for a discussion on this topic.** **2. FERC Order 693 directs that NERC establish requirements for the maintenance of the Protection System and control circuitry is a portion thereof. Therefore, requirements for the maintenance of the control circuitry are necessary and the SDT has developed those requirements in a fashion that affords entities with the opportunity to best meet those requirements.**				
James A Ziebarth	Y-W Electric Association, Inc.	4	Negative	Y-WEA appreciates the significant amount of work that the SDT has put into this revision of the standard. It is clear that the SDT is making a sincere effort to address comments and concerns from previous revisions of this standard, and that is a good thing. While Y-WEA thanks the SDT for the straightforward honesty of disagreeing with our previous comments on the battery testing interval of 3 months for VRLA batteries, we still feel that this mandatory maximum testing interval is unreasonably short, based on IEEE 1188-2005.

Voter	Entity	Segment	Vote	Comment
				The recommended testing intervals contained in that IEEE standard should be targeted as reasonable testing intervals, with some degree of leeway allowed before any mandatory maximum interval is defined. A mandatory maximum interval of four calendar months would be much more appropriate here. This would allow a reasonable testing and maintenance program to define a standard testing interval of three months (in line with the IEEE standard) and still be able to allow a one month buffer or grace period to account for unexpected delays in testing due to extreme storms or other unanticipated heavy workloads. With the draft standard as written, a company must use an unreasonably short preferred maintenance interval if any grace period is to be built in and still remain under the mandatory maximum interval of the NERC standard. In particular, this could have a substantial impact on small companies that are distributed over a large area but have limited resources to deal with such stringent testing requirements. Because this standard will ultimately have to comply with the Regulatory Flexibility Act, it would be worthwhile for the SDT to consider the potential impacts of essentially forcing entities into much more stringent testing programs than recommended by current technically-derived and peer reviewed and approved standards such as IEEE 1188-2005. Other than that, Y-WEA sincerely appreciates the clarity that has been added to this standard over that contained in previous versions of the testing and maintenance standards. This will give registered entities much more guidance as to what NERC's and the regional entities' expectations are when it comes to protection system testing and maintenance programs.
Response: **Thank you for your comments. The SDT has revised the 3-month interval specified for VRLA batteries for some activities to 6 months.**				
Francis J. Halpin	Bonneville Power Administration	5	Negative	Please see BPA's comments submitted seperately
Response: **Thank you for your comments. Please see our responses to your comments submitted during the Formal Comment period.**				
Wilket (Jack) Ng	Consolidated Edison Co. of New York	5	Negative	The Tables – 1. The wording “Component Type” is not necessary in each title. Just the equipment category should be listed--what is now shown as “Component Type - Protective Relay”, should be Protective Relay. However, Protective Relay is too general a category. Electromechanical relays, solid state relays, and microprocessor based relays should have their own separate tables. So instead of reading Protective Relay in the title, it should read

Voter	Entity	Segment	Vote	Comment
				Electromechanical Relays, etc. This will lengthen the standard, but will simplify reading and referring to the tables, and eliminate confusion when looking for information. 2. The “Note” included in the heading is also not necessary. “Attributes” is also not necessary in the column heading, “Component” suffices. Other Comments - In general, the standard is overly prescriptive and complex. It should not be necessary for a standard at this level to be as detailed and complex as this standard is. Entities working with manufacturers, and knowledge gained from experience can develop adequate maintenance and testing programs. 3. Why are “Relays that respond to non-electrical inputs or impulses (such as, but not limited to, vibration, pressure, seismic, thermal or gas accumulation)…” not included? The output contacts from these devices are oftentimes connected in tripping or control circuits to isolate problem equipment. 4. Due to the critical nature of the trip coil, it must be maintained more frequently if it is not monitored. Trip coils are also considered in the standard as being part of the control circuitry. Table 1-5 has a row labeled “Unmonitored Control circuitry associated with protective functions”, which would include trip coils, has a “Maximum Maintenance Interval” of “12 Calendar Years”. Any control circuit could fail at any time, but an unmonitored control circuit could fail, and remain undetected for years with the times specified in the Table (it might only be 6 years if I understand that as being the trip test interval specified in the table). Regardless, if a breaker is unable to trip because of control circuit failure, then the system must be operated in real time assuming that that breaker will not trip for a fault or an event, and backup facilities would be called upon to operate. Thus, for a line fault with a “stuck” breaker (a breaker unable to trip), instead of one line tripping, you might have many more lines deloaded or tripped because of a bus having to be cleared because of a breaker failure initiation. The bulk electric system would have to be operated to handle this contingency. 5. In reference to the FAQ document, Section 5 on Station dc Supply, Question K, clarification is needed with respect to dc supplies for communication within the substation. For example, if the communication systems were run off a separate battery in separate area in a substation, would the standard apply to these batteries or not? 6. To define terms only as they are used in PRC-005-2 is inviting confusion. Although they may be unique to PRC-005-2, some or all of them may be

Voter	Entity	Segment	Vote	Comment
				used in future standards, some already may be used in existing standards, and may or may not be deliberately defined. Consistency must be maintained, not only for administrative purposes, but for effective technical communications as well. 7. What is the definition of "Maintenance" as used in the table column "Maximum Maintenance Interval"? Maintenance can range from cleaning a relay cover to a full calibration of a relay. 8. A control circuit is not a component, it is made up of components. 9. Sub-requirement 1.5 needs to be clarified. It is not clear what "Identify calibration tolerances or other equivalent parameters…" means, and may be subject to different interpretations by entities and compliance enforcement personnel. 10. In the Implementation plan for Requirement R1, recommend changing "six" to fifteen. This change would restore the 3-month time difference that existed in the previous draft, between the durations of the implementation periods for jurisdictions that do and do not require regulatory approval. It will ensure equity for those entities located in jurisdictions that do not require regulatory approval, as is the case in Ontario. 11. The 'box' for "Monitored Station dc supply…" in Table 1-4 is not clear. It seems to continue to the next page to a new box. There are multiple activities without clear delineation. 12. Regarding station service transformers, Item 4.2.5.5 under Applicability should be deleted. The purpose of this standard is to protect the BES by clearing generator, generator bus faults (or other electrical anomalies associated with the generator) from the BES. Having this standard apply to generator station service transformers, that have no direct connection to the BES, does meet this criteria. The FAQs (III.2.A) discuss how the loss of a station service transformer could cause the loss of a generating unit, but this is not the purpose of PRC-005. Using this logic than any system or device in the power plant that could cause a loss of generation should also be included. This is beyond the scope of the NERC standards.

Response: **Thank you for your comments.**

1. **The SDT believes that the table headings are appropriate as reflected in the draft standard.**

2. **The intervals and activities specified are believed by the SDT to be technically effective, in a fashion that may be consistently monitored for compliance. Further, FERC Order 693 directs NERC to establish maximum allowable intervals, which implies that minimum activities also need to be prescribed. If an entities' experience is that components require less-frequent maintenance, a performance-based program in accordance with R3 and Attachment A is an option.**

Voter	Entity	Segment	Vote	Comment
				3. The SDT concentrated their efforts on protective relays which use the entire group of component types within the Protection System definition. Also, there is currently no technical basis for the maintenance of the devices which respond to non-electrical quantities on which to base mandatory standards related either to activities or intervals. Absent such a technical basis, we are currently unable to establish mandatory requirements, but may do so in the future if such a technical basis becomes available. **4. According to Table 1-5, trip coils of interrupting devices must be verified to operate every 6 years, rather than the 12-year interval. You can maintain these devices more frequently if you desire.** **5. With respect to dc supply associated only with communication systems, we prescribe, within Table 1-2, that the communications system must be verified as functional every 3 months, unless the functionality is verified by monitoring. The specific station dc supply requirements (Table 1-4) do not apply to the dc supply associated only with communications systems. The SDT has decided to eliminate the FAQ and incorporate topics and discussion from the FAQ within the Supplementary Reference document. Your comments have been considered within that activity.** **6. The SDT has proposed these terms for use only within PRC-005-2 because we are concerned that other uses of these terms, either now or in the future, may not be consistent with the terms used here. They are defined only for clarify within this standard.** **7. As used in the "Maximum Maintenance Interval" column title of the table, maintenance refers to whatever activities are specified in the Activities column. The term is capitalized in the column title in conformance with normal editorial practice as a title, rather than as a definition.** **8. For purposes of this standard, the control circuit is defined as one component type.** **9. The SDT has determined that the fundamental concerns of Requirement R1, Part 1.5 and the associated changes are addressed within the PSMP definition, and that Requirement R1, Part 1.5 is not necessary; therefore, it has been removed. Requirement R4 has also been re-drafted to address various related concerns noted within comments. The associated VSL has also been revised. Please see Supplementary Reference Document, Section 8 for a discussion of this.** **10. In consideration of your comment, "six" has been modified to "twelve" in the Implementation Plan for Requirement R1,making it consistent with the remainder of the Implementation Plan.** **11. Table 1-4 has been further modified for clarity.** **12. In response to many comments, including yours, the SDT has removed 4.2.5.5 from the Applicability of the standard.**
Amir Y Hammad	Constellation Power Source Generation, Inc.	5	Negative	Constellation Power Generation is voting against this standard for the following reasons: 1. The applicability has included more generation protective components. The current PRC-005 guidance states that only Station Service transformers for plants 75 MVA and up should be included. The proposed

Voter	Entity	Segment	Vote	Comment
				standard includes all station service transformers, regardless of plant size or connection (via generator or system). Constellation Power Generation does not see the reliability benefits of this increased scope. 2. R1.4 states that all monitoring attributes of all components must be listed and identified. For most generation facilities, it is more efficient to calibrate/check the entire protective system while the plant is in an outage, regardless of a component's monitoring capabilities. This requirement would require those facilities to maintain a list of attributes that won't ever be used, and would not alter their testing frequency. What if an entity were found non-compliant in the situation that was just described? It does not affect the reliability of the BES and therefore R1.4 should be removed. 3. M1 doesn't include a measure for R1.4. It just implies that a facility must maintain a list. 4. The battery listing in the attached table is still too prescriptive. If unmonitored, there should be a quarterly and yearly check, which is implied, but it is then broken out by battery type to be more prescriptive. 5. PTs and CTs are mentioned, but it seems as though the drafting team wants a facility to only test the outputs to ensure they are working properly. To clarify this, Constellation Power Generation suggests rewording the testing verbiage for PTs and CTs.
Response: **1. Section 4.2.5 of "Applicability" specifies that only Generation Facilities that are part of the BES are included.** **2. The SDT disagrees; Requirement R1, Part 1.4 supports Requirement R1, Part 1.2, and seems necessary to assure that entities have appropriately applied the longer intervals associated with monitored components. However, in consideration to your comment the SDT has revised Requirement R1, Part 1.4 and has also removed Requirement R2 because of redundancy to Requirement R1, Part 1.4.** **3. Measure M1 has been revised in consideration of your comment.** **4. The activities for different battery types are addressed separately because the relevant activities differ.** **5. The SDT intends that the instrument transformer and associated circuitry be verified to be functional, but believes that customary apparatus maintenance (dielectric, infrared, etc) are not relevant to PRC-005-2.**				
James B Lewis	Consumers Energy	5	Negative	1. Table 1-3 states, "are received by the protective relays". Does this require that the inputs to each individual relay must be checked, or is it sufficient to verify that acceptable signals are received at the relay panel, etc? 2. Relative to Table 1-5, the activities will likely require that system components be removed from service to complete those activities. If the changes to the BES definition (per the FERC Order) causes system elements such as 138 kV connected distribution transformers to be considered as BES, these components can not be removed from service for maintenance without tripping customers. The standard

Voter	Entity	Segment	Vote	Comment
				must exempt these components from the activities of Table 1-5 if the activity would result in deenergizing customers. 3. For the component types addressed in Tables 1-3 and 1-5, the requirements may cause entities to identify components very differently than they are currently doing, and doing so may take several years to complete. The Implementation Plan for R1 and R4 is too aggressive in that it may not permit entities to complete the identification of discrete components and the associated maintenance and implement their program as currently proposed. We propose that the Implementation Plan specifically address the components in Table 1-3 and 1-5 with a minimum of 3 calendar years for R1 and 12 calendar years after that for R4. 4. As for the interval in Table 1-4 regarding the battery terminal connection resistance, we believe that an 18-month interval is excessively frequent for this activity, and suggest that it be moved to the 6-calendar-year interval. 5. In Table 1-4, we currently re-torque all of the battery terminal connections every 4-years, rather than measuring the terminal connection resistance to determine if the connections are sound. Disregarding the interval, would this activity satisfy the "verify the battery terminal connection resistance" activity?
Response: **Thank you for your comments.** **1. The SDT intends that the voltage and current signals properly reach each individual relay, but there may be several methods of accomplishing this activity.** **2. This concern seems more properly to be one to be addressed during the activities to develop the new BES definition, rather than within PRC-005-2.** **3. The Implementation Plan for Requirement R1 has been modified from 6 months to 12 months. The Standard has also been modified (Requirement R1, Part 1.1) to not specifically require identification of all individual Protection System components. The Implementation Plan for Requirement R4 has been revised to add one year to all established dates.** **4. IEEE 450, 1188, 1106 all recommend this activity at a 12-month interval. Please see Clause 15.4.1 of the Supplementary Reference Document for a discussion of this activity.** **5. Re-torqueing the battery terminals would not meet this requirement.**				
Mike Garton	Dominion Resources, Inc.	5	Negative	Dominion is opposed to this version because Requirement R1.5 is overly prescriptive, requiring an extraordinary level of documentation, with little anticipated improvement in reliability.
Response: **Thank you for your comments. The SDT has determined that the fundamental concerns of Requirement R1, Part 1.5 and the associated changes are addressed within the PSMP definition, and that Requirement R1, Part 1.5 is not necessary; therefore, it has been removed. Requirement R4 has also been re-drafted to address various related concerns noted within comments. The associated VSL has also been revised. Please see Supplementary Reference Document, Section 8 for a discussion of this.**				

Voter	Entity	Segment	Vote	Comment
Stanley M Jaskot	Entergy Corporation	5	Negative	The restructured tables are generally much clearer and the SDT is to be commended on their efforts. 1. However, we believe the Alarming Point Table needs additional clarification with regard to the Maximum Maintenance Interval. If an "alarm producing device" is considered to be a device such as an SCADA RTU, individual entity intervals for such a device would differ, and there isn't necessarily a maximum interval established as there is for Protection System components. Also, if an entity's alarm producing device maintenance is performed in sections and triggered by segment or component maintenance, there would essentially be multiple maximum intervals for the alarm producing device of that entity. On that basis, we suggest the interval verbiage be revised to "When alarm producing device or system is verified, or by sections as per the monitored component/protection system specified maximum interval as applicable". Alternately, if the intention is to establish maximum intervals as simply being no longer than the individual component maintenance intervals as we suggest for inclusion above, then the verbiage should be revised to "When alarm producing component/protection system segment is verified". In either case are we to interpret monitored components with attributes which allow for no periodic maintenance specified as not requiring periodic alarm verification? 2. R1.5 calls for "identification of calibration tolerances or equivalent parameters..." whereas the associated VSL references "failure to establish calibration criteria...." and is listed as high. If R1.5 is to be included in this standard, then we suggest the severity level of a failure to simply "identify" or document such calibration tolerances would be analogous to the severity level(s) of a "failure to specify one (or the severity level should be consistent with the other elements of R1. Both cases appear to be more of a documentation issue as opposed to a failure to implement. Shouldn't a failure to implement any necessary calibration tolerance be accounted for in R4? 3. R1.5 calls for "identification of calibration tolerances or equivalent parameters for each Protection System Component Type....". We believe the Supplementary Reference document should provide additional information and examples of calibration tolerances or equivalent parameters which would be expected for the various component types. Especially for any "equivalent" parameters which would be required for compliance for a component type besides protective relays. Adding Requirement 1.5 is a significant revision and raises questions as to how

Voter	Entity	Segment	Vote	Comment
				broadly an accuracy or equivalent parameter requirement and associated documentation would need to be addressed by entities and/or will be measured for compliance. Discussion on this new requirement does not seem to be addressed anywhere in the FAQ or Supplementary Reference documents. Additionally, to the best of our knowledge, the need for such a requirement was not brought up as a concern or comment on the prior draft version of this standard, and in the context of a requirement need, we don't believe it has been attributed to or actually poses any significant reliability risk. We do not believe this requirement is justified.
Response: **Thank you for your comments.** **1. The Maximum Maintenance Interval column entry in Table 2 has been revised to state, "When alarm producing Protection System component is verified" to clarify this.** **2. The SDT has determined that the fundamental concerns of Requirement R1, Part 1.5 and the associated changes are addressed within the PSMP definition, and that Requirement R1, Part 1.5 is not necessary; therefore, it has been removed. Requirement R4 has also been re-drafted to address various related concerns noted within comments. The associated VSL has also been revised. Please see Supplementary Reference Document, Section 8 for a discussion of this.** **3. The SDT has determined that the fundamental concerns of Requirement R1, Part 1.5 and the associated changes are addressed within the PSMP definition, and that Requirement R1, Part 1.5 is not necessary; therefore, it has been removed. Requirement R4 has also been re-drafted to address various related concerns noted within comments. The associated VSL has also been revised. Please see Supplementary Reference Document, Section 8 for a discussion of this.**				
Kenneth Dresner	FirstEnergy Solutions	5	Negative	Please see FirstEnergy's comments submitted separately through the comment period posting
Response: **Thank you for your comments. Please see our responses to your comments submitted during the formal comment period.**				
David Schumann	Florida Municipal Power Agency	5	Negative	1. UFLS and UVLS maintenance and testing is greatly expanded, e.g., we interpreted PRC-008/011 as being only the UFLS/UVLS equipment. The new PRC-005 sweeps in other protection system components, e.g., communications (probably not applicable), voltage and current sensing devices (e.g., instrument transformers), Station DC supply, control circuitry. What's key about this is that these components are all part of distribution system protection, so, these activities would not be covered by other BES protection system maintenance and testing. I'm sure we are testing batteries and the like, but, we are probably not testing battery chargers and control circuity, and, in many cases distribution circuits are such that it is very difficult, if not impossible, to test control circuitry to the trip coil of the breaker without causing an outage of the customers on that distribution circuit. There is no real reliability need for this either.

Voter	Entity	Segment	Vote	Comment
				Unlike Transmission and Generation Protection Systems which are needed to clear a fault and may only have one or two back-up systems, there are thousands and thousands of UFLS relays and if one fails to operate, it will not be noticeable to the event. It does make sense to test the relays themselves in part to ensure that the regio0nsl UFLS program is being met, but, to test the other protection system components is not worthwhile. Note that DC Supplies and most of the control circuitry of distribution lines are "tested" frequently by distribution circuits clearing faults such as animals, vegetation blow-ins, lightning, etc., on distribution circuits, reducing the value of testing to just about null. However, this version is better than prior versions because it essentially requires the entity to determine it's own period of maintenance and testing for UFLS/UVLS for DC Supply and control circuitry. 2. Applicability, 4.2.1, should reflect the Y&W and Tri-State interpretation (Project 2009-17) of "transmission Protection System" and should state: "Protection Systems applied on, or designed to provide protection for a BES Facility and that trips a BES Facility" 3. Applicability, 4.2. - does not reflect the interpretation of Project 20009-10 that excludes non-electrical protection (e.g., sudden pressure relays) and auxiliary relays. Because the definition of Protection System (recently approved) does not clearly exclude "non-electrical" protection,the Applicability section should. For instance,, a vibration monitor, steam pressure, etc. protection of generators, sudden pressure protection of transformers, etc. should not be included in the standard. An alternative is to change the definition of Protection System to make sure it only includes electrical the VRF of R1 should be Low since the attached tables are essentially the PSMP.

Response: **Thank you for your comments.**

1. **For UFLS and UVLS, the maintenance activities related to station dc supply and control circuitry are somewhat constrained relative to similar activities for Protection Systems in general. Regardless, without proper functioning of these component types, UFLS and UVLS will not respond as expected, and will therefore degrade BES system reliability, particularly during the stressed system conditions for which UFLS and UVLS are installed. Relative to control circuitry, Table 1-5 specifically excludes UFLS and UVLS from maintenance activities related to the interrupting device trip coil.**
2. **This interpretation is not yet approved by FERC. When this interpretation is approved, the SDT will incorporate it within PRC-005-2. However, the SDT has made modifications to Applicability 4.2.1.**
3. **The recently-balloted revision of the definition of Protection System, which has been approved by the NERC Board of Trustees and will soon be filed with FERC for approval, clearly includes only protective relays that respond to electrical quantities. As for auxiliary relays, the interpretation to which you refer states that they are not explicitly included, but are included to the**

Voter	Entity	Segment	Vote	Comment
degree that an entity's Protection System control circuitry addresses them(which has been identified as a reliability gap), and are being added to PRC-005-2 to resolve the gap.				
Rex A Roehl	Indeck Energy Services, Inc.	5	Negative	The level of detail for every conceivable component of every conceivable protective system does not relate to improving reliability. For some protective systems on some equipment, following these requirements, which is undoubtedly already done, will result in good reliability, but probably not improve reliability. Applying those same requirements to the thousands, if not millions, of other protective systems with generate significant costs, generate significant numbers of violations and not have any significant impact on reliability. The costs of this type of program cannot be justified unless there is an NRC mandate or a pass through to ratepayers. Most of the industry will take the cost of this program directly from the bottom line. For minimal reliability improvement, that is not appropriate under the FPA Section 215.
Response: **Thank you for your comments. FERC Order 693 and the approved SAR assign the SDT to develop a standard with maximum allowable intervals and minimum maintenance activities. The intervals and activities specified are believed by the SDT to be technically effective, in a fashion that benefits reliability and that may be consistently monitored for compliance.**				
Dennis Florom	Lincoln Electric System	5	Affirmative	While the proposed draft of the standard is acceptable as currently written, LES would like the drafting team to consider the following comments. (1) Table 1-1 should state "Test and calibrate (if necessary)" in the first section under activities. If a relay passes the test, there is no need to calibrate it. Therefore, not all relays will require calibration. (2) Please explain the drafting team's reason for not checking the trip coils of breakers in the UFLS/UVLS schemes but ensuring that all others are operated every six years. It would appear that they can all be lumped into the same group one way or another. (3) In regards to Specific Gravity Testing, many people do not perform the specific gravity test routinely if they perform the individual cell internal ohmic test routinely. LES asks the drafting team to consider allowing the internal cell ohmic test as a substitute for the specific gravity test.
Response: **Thank you for your comments.** 1. **Table 1-1 has been modified as you suggest.** 2. **This is an intentional difference between UFLS/UVLS and the remainder of the Protection Systems addressed within the Standard, because of the distributed nature of UFLS/UVLS and because these devices are usually tripping distribution system elements.** 3. **Table 1-4 does not specify specific gravity testing.**				
Mike Laney	Luminant Generation	5	Negative	Luminant commends the PRC-005-2 Standard Drafting Team for its quality efforts in producing this version of the Standard however; Luminant must cast a negative

Voter	Entity	Segment	Vote	Comment
	Company LLC			ballot vote for this present version of the Standard. The negative vote against the present version of PRC-005-2 is solely based on the addition of Requirement R1 Part 1.5 with its associated reference to it in Requirement R4 Part 4.2 and the VSL table. It is Luminant's opinion that this new Requirement as written subjects all Transmission Owners, Generation Owners and Distribution Providers to vague interpretations of a requirement that cannot be complied with because it is impossible for any of them to draft the necessary documentation to be compliant with the Standard. As stated in the High VSL associated with Part 1.5 of Requirement R1 all owners will fail "to establish calibration tolerance or equivalent parameters to determine if every individual discrete piece of equipment in a Protection System is within acceptable parameters." It is Luminant's opinion that the measurement of acceptable performance during maintenance and testing activities can be accomplished with a Pass/Fail type of documentation on a test form. No company can effectively establish calibration tolerance parameters for an entire "component type" of the Protection System. Doing so could be detrimental to the reliability of the grid. Parameters are dependent on the location, application and situation specific to each Protection System device. The inclusion of Part 1.5 of Requirement R1 is a significant addition to the standard, and by NERC Rules of Procedure requires the input and consideration of the full Standard Drafting Team.
Response: **Thank you for your comments. The SDT has determined that the fundamental concerns of Requirement R1, Part 1.5 and the associated changes are addressed within the PSMP definition, and that Requirement R1, Part 1.5 is not necessary; therefore, it has been removed. Requirement R4 has also been re-drafted to address various related concerns noted within comments. The associated VSL has also been revised. Please see Supplementary Reference Document, Section 8 for a discussion of this.**				
Wayne Lewis	Progress Energy Carolinas	5	Negative	1. Implementation Plan for PRC-005-2 Since R2, R3, and R4 requirements would be performed after establishment of the program documentation, an additional year should be added to all implementation dates for Requirements R2, R3, and R4 as shown below: • Maintenance on components with intervals less than one year must be completed within two years after applicable regulatory approval (within one year of completion of R1 Program Documentation). • Maintenance on components with intervals between one year and two years must be completed within three years after applicable regulatory approval (within two years of completion of R1 Program

Voter	Entity	Segment	Vote	Comment
				Documentation). • Maintenance on components with intervals of six years must be completed within three-, five-, and seven-year milestones after applicable regulatory approval (within two, four, and six years of completion of R1 Program Documentation). • Maintenance on components with intervals of twelve years must be completed within five-, nine-, and thirteen-year milestones after applicable regulatory approval (within four, eight, and twelve years of completion of R1 Program Documentation). 2. Standard PRC-005-02 1. Table 1-2: Rows 1 and 2 require different intervals for the activity "Verify essential signals to and from Protection System components." Unless these inputs and outputs are monitored for Row 2, it would seem that they should be performed at the same interval for both Rows 1 and 2. Therefore, EITHER: 1. Row 1 should be broken into the following three activities: • 3 months - Verify communications system is functional • 6 years - Verify channel meets performance criteria • 12 years - Verify essential signals to and from other Protection System components OR: 2. Row 2 should be broken into the following two activities: 1. 12 years - Verify channel meets performance criteria 2. 6 years - Verify essential signals to and from other Protection System components 2. 3. Table 1-4: Only Row 1 addresses dc supplies associated with UFLS or UVLS systems. All other rows state that UFLS or UVLS systems are excluded. What is required to "Verify dc supply voltage" for the UFLS/UVLS systems? Does it require that the overall station battery voltage be checked or just the dc voltage available to the UFLS/UVLS circuit of interest? If a voltage measurement is taken at the UFLS/UVLS circuit (e.g., in distribution breaker cabinet), can the batteries/chargers at these facilities be excluded from the PRC-005-2 scope as long as they do not also supply transmission-related protection? 4. PRC-005-2 FAQ's Document Section V.1.A, Example #2: The instrument transformer should be classified as "unmonitored" not "monitored."
Response: **Thank you for your comments.** **1. The Implementation Plan for Requirement R1 has been changed from 12 months to 15 months in consideration of your comment. The Implementation Plan for Requirement R4 has been revised to add one year to all established dates.** **2. The first and second rows differ in that the first row is for unmonitored communications systems, and the second row is for monitored communications systems. The activities in both rows are appropriate and correct.**				

Voter	Entity	Segment	Vote	Comment
3. Table 1-4 has been completely re-structured. For station dc supply for only UFLS/UVLS, the only activity is to verify the dc voltage. **4. The SDT decided to eliminate the FAQ document and incorporate the FAQ's contents into the Supplementary Reference Document as appropriate. The SDT considered your comments during this activity.**				
Jerzy A Slusarz	PSEG Power LLC	5	Negative	The PSEG Companies do not agree with the Facilities as currently described in section 4.2.5.5. Please refer to detailed comments provided in the formal Comment Form.
Response: **Thank you for your comments. Please see our response to your detailed comments from the formal comment period.**				
Steven Grega	Public Utility District No. 1 of Lewis County	5	Negative	Do not like the word "all" in the proposed standard. Does all components mean each piece of wire is included? Engineers are conservative in their protection system designs and have redundant relays and protection paths. Even with half the relays out of service, protection is normally retained. Would want to have 80% a compliance level with a year to test & maintenance any component testing founded to be non-compliant. This proposed standard will ensure many more violations.
Response: **Thank you for your comments. The approved PRC-005-1 already requires that entities have a program to maintain their Protection System and implement that program. This already implies, "all", therefore PRC-005-2 should not have the impact suggested by your comment.**				
Michael J. Haynes	Seattle City Light	5	Negative	The proposed Standard PRC-005-2 is an improvement over the previous draft in that it provides more consistency in maintenance and testing duration internals. Notwithstanding, two issues are of concern to Seattle City Light such that it is compelled to vote no: 1. the establishment of bookends for standard verification and 2) the implementation timelines for entities with systems where electro-mechanical relays still compose a significant number of components in their protection systems. Bookends: Proposed Standard PRC-005-2 specifies long inspection and maintenance intervals, up to 12 years, which correspondingly exacerbates the so-called "bookend" issue. To demonstrate that interval-based requirements have been met, two dates are needed - bookends. Evidencing an initial date can be problematic for cases where the initial date would occur prior to the effective date of a standard. NERC has provided no guidance on this issue, and the Regions approach it differently. Some, such as Texas Regional Entity, require initial dates beginning on or after the effective date of a Standard. Compliance with intervals is assessed only once two dates are available that occur on or after a standard took effect. Other regions, such as Western Electricity Coordinating Council (WECC), require

Voter	Entity	Segment	Vote	Comment
				that entities evidence an initial date prior to the effective date of a standard. For WECC, compliance with intervals is assessed as soon as a standard takes effect. Such variation makes application of standards involving bookends uncertain, arbitrary, capricious, and in the case of WECC, possibly illegal. Proposed Standard PRC-005-2 will be another such standard. Indeed this Standard will involve by far the largest number of bookends of any NERC standard - many thousands for a typical entity. Furthermore, the long inspection and maintenance intervals introduced in the draft will require entities in WECC, for instance, to evidence initial bookend dates prior to the date original PRC-005-1 took effect. For the 12-year intervals for CTs and VTs in proposed Standard PRC-005-2, many initial dates will occur prior to the 2005 Federal Power Act that authorized Mandatory Reliability Standards and even reach back before the 2003 blackout that catalyzed the effort to pass the Federal Power Act. As a result, many entities in WECC maybe at risk of being found in violation of proposed Standard PRC-005-2 immediately upon its implementation. Seattle City Light requests that NERC address the bookends issue, either within proposed Standard PRC-005-2 or in a separate, concurrent document. 2. Legacy Systems: Many entities still have legacy protection systems that rely upon electro-mechanical relays. Effective testing approaches differ between electro-mechanical and digital relay systems. Thus, although the proposed standard rightly looks to the future of digital relays by specifying testing and maintenance focused on protection systems as a whole, the proposed implementation timelines create a level of hardship for those utilities with legacy systems. In example, auxilary relay and trip coil testing may be essential to prove the correct operation of complex, multi-function digital protection systems. However, for legacy systems with single-function electro-mechnical compenents, the considerable documentation and operational testing needed to implement and track such testing is not necessarily proporational to the relative risk posed by the equipment to the bulk electric system. Performance testing of electro-mechanical systems, particularly regarding control circuits, will require extensive disconnection and reconnection of portions of the circuits. Such activities will likely cause far more problems on restoration-to-service than they will locate and correct. As such, to assist entities in their implementation efforts, we believe provision of alternatives are necessary, such as additional implementation time through phasing and/or through technical feasability exceptions.

Voter	Entity	Segment	Vote	Comment
Response: **Thank you for your comments.** **1. This issue has been addressed by NERC in Compliance Application Notice CAN-008 "PRC-005 R2 Pre-June 18 Evidence".** **2. Please see Sections 8 and 15.3 of the Supplementary Reference Document for a discussion on this topic. FERC Order 693 directs that NERC establish requirements for the maintenance of the Protection System and control circuitry is a portion thereof. Therefore, requirements for the maintenance of the control circuitry are necessary and the SDT has developed those requirements in a fashion that affords entities with the opportunity to best meet those requirements.**				
William D Shultz	Southern Company Generation	5	Negative	Please see comments submitted via the electronic comment form.
Response: **Thank you for your comments. Please see our responses to your comments from the formal comment period.**				
George T. Ballew	Tennessee Valley Authority	5	Negative	Project 2007-17 Protection System Maintenance for Standard PRC-005-2 Draft - NERC is recommending significant changes to this sizeable standard and only allowing minimum comment period. While this is a good standard that has clearly taken many hours to develop, we are primarily voting NO because of the hurried fashion it is being commented, voted, and reviewed. Official comments to the document were entered on the NERC Portal.
Response: **Thank you for your comments. Please see our responses to your comments from the formal comment period.**				
Melissa Kurtz	U.S. Army Corps of Engineers	5	Negative	Paragraph 4.2.5.4 - The standard should be changed to require station service transformers only if they will cause a loss of the generator tied to the BES. Also recommend a definition of station service - we have station service that if lost would not negatively effect the BES.
Response: **Thank you for your comments. Clause 4.2.5.5 has been removed. Generator-connected station service transformers are essential to the continuing operation of the generation plant; therefore, protection on these system components is included within PRC-005-2 if the generation plant is a BES facility.**				
Martin Bauer P.E.	U.S. Bureau of Reclamation	5	Negative	1.The tables rely on a reference document which is not a part of the standard and as such may be altered without due process. Either the relevant text from the reference needs to be inserted into the standard or the reference itself incorporated into the standard. 2.The supplemental reference provides significant clarity to the intent of standard; however, in doing so, it reveals conflicts and ambiguity in the text of the standard. It is suggested that some of the clarifying language be inserted

Voter	Entity	Segment	Vote	Comment
				into the text of the standard. 3.The concept of including definitions in this standard that are not a part of the Glossary of Terms will create a conflict with other standards that choose to use the term with a different meaning. This practice should be disallowed. If a definition is be introduced it should be added to the Glossary of Terms. This concept was not provided to industry for comment when the modifications to the Definition of Protection System was introduced. Additional related to this practice are included later on. 4. The Term "Protective Relays" is overly broad as it is not limited to those devices which are used to protect the BES. In the reference provided to the standard, the SDT defined "Protective Relays" as "These relays are defined as the devices that receive the input signal from the current and voltage sensing devices and are used to isolate a faulted portion of the BES. " The Definition for "Protective Relays' as well as the components associated with the them should be associated with the protection of the BES in the definition. 5. The Section 2.4 of the attached reference and the recent FERC NOPR are in conflict with the definition of "Protective Relays" which include lockout relays and transfer trip relays "The relays to which this standard applies are those relays that use measurements of voltage, current, frequency and/or phase angle and provide a trip output to trip coils, dc control circuitry or associated communications equipment. 6. This Draft 2: April3: November 17, 2010 Page 5 definition extends to IEEE device # 86 (lockout relay) and IEEE device # 94 (tripping or trip-free relay) as these devices are tripping relays that respond to the trip signal of the protective relay that processed the signals from the current and voltage sensing devices." The definition should be revised to reflect that is really intended. The SDT as created an implied definition by specifically defining DC circuits associated with the trip function of a "Protective Relay" but failing to specifically define voltage and current sensing circuits providing inputs to "Protective Relays". The team clearly intended the circuits to be included but the definition does not since it only refers the the "voltage and current sensing devices". 7.Starting with the Definitions and continuing through the end of the document, terms that have been defined are not capitalized. This leaves it ambiguous as to whether the defined term is to be applied or it is a generic reference. Only defined terms "Protection System Maintenance Program" and "Protection System" are consistently capitalized. 8. Protection System Maintenance Program (PSMP) definition: The Restore bullet should be revised to read as follows: "Return malfunctioning components to

Voter	Entity	Segment	Vote	Comment
				proper operation by repair or calibration during performance of the initial on-site activity." Add the following at the end of the PSMP definition: “NOTE: Repair or replacement of malfunctioning Components that require follow-up action fall outside of the PSMP, and are considered Maintenance Correctable Issues.” 9.Protection System (modification) definition: The term "protective functions" that is used herein should be changed to "protective relay functions" or what is meant by the phrase should become a defined term, as it is being used as if it is a well known well defined, and agreed upon term. a. The first bullet text should be revised to read as follows: "Protective relays that monitor BES electrical quantities and respond when those quantities exceed established parameters," the last two bullets should be reversed in order and modified to read as follows: o control circuitry associated with protective relay functions through the trip coil(s) of the circuit breakers or other interrupting devices, and o station dc supply (including station batteries, battery chargers, and non-battery-based dc supply) associated with the preceding four bullets. 10. Statement between the Protection System (modification) definition and the Maintenance Correctable Issue definition; Is this a NERC accepted practice? There does not appear to be a location in the standard for defining terms. Having terms that are not contained in the "Glossary of Terms used in NERC Reliability Standards," and are outside of the terms of the standards, and yet are necessary to understand the terms of the Requirements is not acceptable. They would become similar to the reference documents, and could be changed without notice. 11. Maintenance Correctable Issue definition: The last sentence should be modified to read as follows: "Therefore this issue requires follow-up corrective action which is outside the scope of the Protection System Maintenance Program and the Standard PRC-005-2 defined Maximum Maintenance Intervals." The definition could also be easily clarified to read "Maintenance Correctable Issue - Failure of a component to operate within design parameters such that it cannot be restored to functional order by repair or calibration; therefore requires replacement." This ensures that any action to restore the equipment, short of replacement, is still considered maintenance. Otherwise ambiguity is introduced as what "maintenance" is. 12. Countable Event definition: An explanation should be made that this is a part of the technical justification for the ongoing use of a performance-based Protection System Maintenance Program for PRC-005. 13. Insert the phrase "Standard PRC-005-2" before the term "Tables 1-1..."

Voter	Entity	Segment	Vote	Comment
				14. Applicability: 4.2. Facilities: 4.2.5.4 and 4.2.5.5: Delete these two parts of the applicability. Station service transformer protection systems are not designed to provide protection for the BES. Per PRC-005-2 Protection System Maintenance Draft Supplementary Reference, Nov. 17 2010, Section 2.3 - Applicability of New Protection System Maintenance Standards: "The BES purpose is to transfer bulk power. The applicability language has been changed from the original PRC-005: "...affecting the reliability of the Bulk Electric System (BES)..." To the present language: "... and that are applied on, or are designed to provide protection for the BES." The drafting team intends that this Standard will not apply to "merely possible" parallel paths, (sub-transmission and distribution circuits), but rather the standard applies to any Protection System that is designed to detect a fault on the BES and take action in response to that fault." Station Service transformer protection is designed to detect a fault on equipment internal to a powerplant and not directly related to the BES. In addition, many Station Service protection ensures fail over to a second source in case of a problem. Thus station service transformer protection system is a powerplant reliability issue and not a BES reliability issue. As such station service transformer protection should not be included in PRC 005 2. In addition, the SDT appears to have targeted generation station service without regard to transmission systems. If generating station service transformers are that important, then why are substation/switchyard station service transformers not also important? 15. Requirements Should the sub requirements have the "R" prefix? 16. R4. Change the phrase "... PSMP, including identification of the resolution of all ..." to read "...PSMP including identification, but not the resolution, of all ...". 17.General comment PRC005-2 is very specific in listing the

Response: **Thank you for your comments.**

1. **The Tables do not provide a reference to either the Supplementary Reference Document or the FAQ. An entity must comply with the standard when approved. The reference documents provide additional explanation, discussion, and rationale, but are not part of the mandatory standard. Since the reference documents are developed in accordance with the standard and will be posted with the standard, the NERC Standard Development Procedure does require that they undergo industry review before being initially posted, and upon any revision.**

2. **The clarifying language is exactly that – clarifying language, and is not essential to application of the Standard. He NERC Standards Development Procedure establishes that the standard shall not include explanatory text.**

3. **If the terms were placed in the Glossary of Terms, the SDT is concerned that some future SDT, in order to utilize these terms, may change them in a fashion inconsistent with the intended usage within PRC-005-2.**

Voter	Entity	Segment	Vote	Comment
				4. "Protective relay" is defined by IEEE, and the SDT sees no need to either change the definition or to repeat the definition with PRC-005. Further, the applicability of generically-described protective relays is defined by the Applicability clause of PRC-005-2. 5. The issues raised by the FERC NOPR will be addressed as part of the response to the NOPR (and, ultimately, the Order). The extension of auxiliary and lockout relays is not part of the protective relay (addressed within Table 1-1), but instead as part of the control circuitry (Table 1-5). 6. The extension of auxiliary and lockout relays is not part of the protective relay (addressed within Table 1-1), but instead as part of the control circuitry (Table 1-5). 7. Definition from the NERC Glossary of Terms (or those intended for the Glossary) are consistently capitalized (Protection System and Protection System Maintenance Program fall within this category). As for terms defined only for use within this standard, these terms are NOT capitalized, since they are not in the Glossary of Terms. 8. The "restore" portion of PSMP specifically addresses returning malfunctioning components to your proper operation. The requirements regarding maintenance correctable issues are further addressed within that definition (for use only within PRC-005-2). 9. The SDT is currently not planning on further modifying the most recent NERC BOT-approved definition of Protection System. 10. If the terms were placed in the Glossary of Terms, the SDT is concerned that some future SDT, in order to utilize these terms, may change them in a fashion inconsistent with the intended usage within PRC-005-2. 11. Identifying problems, but not fixing them, does not constitute an effective program. In deference to the time that may be necessary to repair / replace defective components, the SDT has decided to require only initiation of resolution of maintenance correctable issues, not to demonstration completion of them. 12. Since this term is used only in Attachment A, it seems unnecessary to provide the explanation requested. 13. The SDT has elected not to change the reference to the Tables throughout the Standard. 14. Thank you for your comments. Clause 4.2.5.5 has been removed. Generator-connected station service transformers are essential to the continuing operation of the generation plant; therefore, protection on these system components is included within PRC-005-2 if the generation plant is a BES facility. 15. The current style guide for NERC Standards does not preface the Parts with an "R". 16. Identifying problems, but not fixing them, does not constitute an effective program. In deference to the time that may be

Voter	Entity	Segment	Vote	Comment
necessary to repair / replace defective components, the SDT has decided to require only initiation of resolution of maintenance correctable issues, not to demonstration completion of them. **17. It appears the remainder of your comment was truncated and cannot be ascertained.**				
Linda Horn	Wisconsin Electric Power Co.	5	Negative	Q4: Table 1-4 requires an activity to verify the state of charge of battery cells. There are no possible options for meeting this requirement listed in the FAQ document. Unlike other terms used in the standard, this term is not mentioned or defined in the FAQ. To comply with this standard, the SDT needs to provide more guidance. For example, for VLA batteries the measured specific gravity could indicate state of charge. For VRLA batteries, it is not as clear how to determine state of charge, but possibly this can be determined by monitoring the float current.
Response: **Thank you for your comments. The SDT decided to eliminate the FAQ document and incorporate the FAQ's contents into the Supplementary Reference Document as appropriate. The SDT considered your comments during this activity. Table 1-4 has been revised to remove "state of charge" from the activities.**				
Leonard Rentmeester	Wisconsin Public Service Corp.	5	Negative	1. Implementation plan is too aggressive given the drastic changes from PRC-005-1 to PRC-005-2 2. The drastic changes don't appear to provide an incremental increase in the reliability of the BES 3. We support the MRO NSRS comments
Response: **Thank you for your comments.** **1. The SDT has carefully considered the changes that entities will be expected to make to their program in response to PRC-005-2 and provided an Implementation Plan that should be sufficient and provided a phase-in approach to permit entities to systemically implement the revised standard. The Implementation Plan for Requirement R4 has been revised to add one year to all established dates.** **2. FERC Order 693 and the approved SAR assign the SDT to develop a standard with maximum allowable intervals and minimum maintenance activities. The intervals and activities specified are believed by the SDT to be technically effective, in a fashion that benefits reliability and that may be consistently monitored for compliance.** **3. Please see our responses to MRO's NSRS formal comments in the Consideration of Comments document.**				
Liam Noailles	Xcel Energy, Inc.	5	Negative	We feel that several improvements were made since the last draft. However, we feel that some gaps exist that should be addressed before moving this project forward. We have detailed our issues in our formal comments
Response: **Thank you for your comments. Please see our response to your formal comments.**				
Edward P. Cox	AEP Marketing	6	Negative	Restructured Tables: 1. Table 1.5 (Control Circuitry), row 4, indicates a maximum interval of 12 years for unmonitored control circuitry, yet other portions of control circuitry have a

Voter	Entity	Segment	Vote	Comment
				maximum interval of 6 years. AEP does not understand the rationale for the difference in intervals, when in most cases, one verifies the other. Also, unmonitored control circuitry is capitalized in row 4 such that it infers a defined term. 2. In the first row of table 1-4 on page 16, it is difficult to determine if it is a cell that wraps from the previous page or is a unique row. This is important because the Maximum Maintenance Intervals are different (i.e. 18 months vs 6 years). It is difficult to determine to which elements the 6 year Maximum Maintenance Interval applies. AEP suggests repeating the heading "Monitored Station dc supply (excluding UFLS and UVLS) with: Monitor and alarm for variations from defined levels (See Table 2):" for the bullet points on this page. VSLs, VRFs and Time Horizons: 3. The VSL table should be revised to remove the reference to the Standard Requirement 1.5 in the R1 "High" VSL. 4. All four levels of the VSL for R2 make reference to a "condition-based PSMP." However, nowhere in the standard is the term "condition-based" used in reference to defining ones PSMP. The VSL for R2 should be revised to remove reference to a condition-based PSMP; alternatively the Standard could be revised to include the term "condition-based" within the Standard Requirements and Table 1. 5. In multiple instances, Table 1 uses the phrase "No periodic maintenance specified" for the Maximum Maintenance Interval. Is this intended to imply that a component with the designated attributes is not required to have any periodic maintenance? If so, the wording should more clearly state "No periodic maintenance required" or perhaps "Maintain per manufacturers recommendations." Failure to clearly state the maintenance requirement for these components leaves room for interpretation on whether a Registered Entity has a maintenance and testing program for devices where the Standard has not specified a periodic maintenance interval and the manufacturer states that no maintenance is required. FAQ and Supplementary Reference: 6. With such a complex standard as this, the FAQ and Supplementary Reference documents do aid the Protection System owner in demystifying the requirements. But AEP holds strong doubt on how much weight the documents carry during audits. It would be better to include them as an appendix in the actual standard, but in a more compact version with the following modifications: a. Section 5 of the Supplementary Reference, refers to "condition-based"

Voter	Entity	Segment	Vote	Comment
				maintenance programs. However, nowhere in the standard is the term "condition-based" used in reference to defining ones PSMP. The Supplementary Reference should be revised to remove reference to a condition-based PSMP; alternatively the Standard could be revised to include the term "condition-based" within the Standard Requirements and Table 1. b. Section 15.7, page 26, appears to have a typographical error "...can all be used as the primary action is the maintenance activity..." c. Figure 2 is difficult to read. The figure is grainy and the colors representing the groups are similar enough that it is hard to distinguish between groups. "Frequently-Asked Questions": 7. With such a complex standard as this, the FAQ and Supplementary Reference documents do aid the Protection System owner in demystifying the requirements. But AEP holds strong doubt on how much weight the documents carry during audits. It would be better to include them as an appendix in the actual standard, but in a more compact version with the following modifications: a. The section "Terms Used in PRC-005-2" is blank and should be removed as it adds no value. Section I.1 and Section IV.3.G reference "condition-based" maintenance programs. However, nowhere in the standard is the term "condition-based" used in reference to defining ones PSMP. b. The FAQ should be revised to remove reference to a condition-based PSMP; alternatively the Standard could be revised to include the term "condition-based" within the Standard Requirements and Table 1. c. The second sentence to the response in Section I.1 appears to have a typographical error "... an entity needs to and perform ONLY time-based...". General: 8. Standards Requirement 1.5 and the reference to R1.5 in Requirement 4.2 should be removed. Specifying calibration tolerances for every protection system component type, while a seemingly good idea, represents a substantial change in the direction of the standard. It would be very onerous for companies to maintain a list of calibration tolerances for every protection system component type and show evidence of such at an audit. AEP believes entities need the flexibility to determine what acceptance criteria is warranted and need discretion to apply real-time engineering/technician judgment where appropriate.

Voter	Entity	Segment	Vote	Comment
				9. Three different types of maintenance programs (time-based, performance-based and condition-based) are referenced in the standard or VSLs, yet the time-based and condition-based programs are neither defined nor described. Certain terms defined within the definition section (such as Countable Event or Segment) only make sense knowing what those three programs entail. These programs should be described within the standard itself and not assume a knowledge of material in the Supplementary Reference or FAQ. 10. "Protective relay" should be a defined term that lists relay function for applicability. There are numerous 'relays' used in protection and control schemes that could be lumped in and be erroneously included as part of a Protection System. For example, reclosing or synchronizing relays respond to voltage and hence could be viewed by an auditor as protective relays, but they in fact perform traditional control functions versus traditional protective functions. 11. The Data Retention requirement of keeping maintenance records for the two most recent maintenance performances is a significant hurdle for any owners to abide by during the initial implementation period. The implementation plan needs to account for this such that Registered Entities do not have to provide retroactive testing information that was not explicitly required in the past.

Response: **Thank you for your comments.**

1. **The 6-year activities are all related to components with "moving parts", and the 12-year activities are related to the other portions of the control circuitry. The capitalized term has been corrected.**
2. **Table 1-4 has been modified in consideration of your comments.**
3. **The SDT has determined that the fundamental concerns of Requirement R1, Part 1.5 and the associated changes are addressed within the PSMP definition, and that Requirement R1, Part 1.5 is not necessary; therefore, it has been removed. The associated VSL has also been revised.**
4. **The SDT concluded that Requirement R2 is redundant to Requirement R1, Part 1.4 and has deleted Requirement R2 (together with the Measures and & VSL).**
5. **If the indicated monitoring attributes are present, no "hands-on" periodic maintenance is required, as the monitoring of the component is providing a continuing indication of its functionality.**
6. **The discussion within the Supplementary Reference Document and FAQ are informative, not normative, and thus do not belong as part of the standard.**
   a) **The Supplementary Reference Document discusses condition-based maintenance in a conceptual manner, as a generally-recognized term. The SDT did make some changes within the Supplementary Reference document to clarify the manner in which condition-based maintenance is discussed.**

Voter	Entity	Segment	Vote	Comment
b) This clause has been corrected. **c) A higher-quality version of Figure 2 has been substituted.** **7. The discussion within the Supplementary Reference Document and FAQ are informative, not normative, and thus do not belong as part of the standard.** **a) The SDT decided to eliminate the FAQ document and incorporate the FAQ's contents into the Supplementary Reference Document as appropriate. The SDT considered your comments during this activity.** **b) The SDT decided to eliminate the FAQ document and incorporate the FAQ's contents into the Supplementary Reference Document as appropriate. The SDT considered your comments during this activity.** **c) The SDT decided to eliminate the FAQ document and incorporate the FAQ's contents into the Supplementary Reference Document as appropriate. The SDT considered your comments during this activity.** **8. The SDT has determined that the fundamental concerns of Requirement R1, Part 1.5 and the associated changes are addressed within the PSMP definition, and that Requirement R1, Part 1.5 is not necessary; therefore, it has been removed. Requirement R4 has also been re-drafted to address various related concerns noted within comments. The associated VSL has also been revised. Please see Supplementary Reference Document, Section 8 for a discussion of this.** **9. The term, "condition-based" has been removed from the draft standard. The other terms are used, but are clear in the context in which they are used.** **10. "Protective relay" is defined by IEEE, and the SDT sees no need to either change the definition or to repeat the definition with PRC-005. Further, the applicability of generically-described protective relays is defined by the Applicability clause of PRC-005-2.** **11. In order that a Compliance Monitor can be assured of compliance, the SDT believes that the Compliance Monitor will need the data of the most recent performance of the maintenance, as well as the data of the preceding one to validate that entities have been in compliance since the last audit (or currently, since the beginning of mandatory compliance). The SDT has specified the data retention in the posted standard to establish this level of documentation. This seems to be consistent with the current practices of several Regional Entities.**				
Brenda S. Anderson	Bonneville Power Administration	6	Negative	Refer to BPA comments
Response: **Thank you for your comments. Please see our response to the BPA comments.**				
Matthew D Cripps	Cleco Power LLC	6	Negative	Cleco applies its' UFLS on the distribution grid with each UF relay individually tripping a relatively low value of load thru breakers and reclosers. Since our program is implemented via a large number of individual components, breakers, reclosers, and individual batteries, the failure of any one component will have a minimal impact on the effectiveness of the overall UFLS program within our region. Therefore, the verification of sensing devices, dc supply voltages, and the

Voter	Entity	Segment	Vote	Comment
				paths of the control circuit and trip circuits on the UFLS systems implemented on the distribution grid is unnecessary.
Response: **Thank you for your comments. The SDT disagrees; the sensing devices, control circuitry and dc supply related to UFLS has an effect on the performance of the UFLS. The SDT has, however, respected the overall impact on the control circuitry of individual UFLS on BES reliability by requiring that UFLS be subjected to a subset of the overall sensing devices, control circuitry and dc supply maintenance activities.**				
Nickesha P Carrol	Consolidated Edison Co. of New York	6	Negative	The Tables 1. The wording "Component Type" is not necessary in each title. Just the equipment category should be listed--what is now shown as "Component Type - Protective Relay", should be Protective Relay. However, Protective Relay is too general a category. Electromechanical relays, solid state relays, and microprocessor based relays should have their own separate tables. So instead of reading Protective Relay in the title, it should read Electromechanical Relays, etc. This will lengthen the standard, but will simplify reading and referring to the tables, and eliminate confusion when looking for information. The "Note" included in the heading is also not necessary. 2. "Attributes" is also not necessary in the column heading, "Component" suffices. Other Comments – 3. In general, the standard is overly prescriptive and complex. It should not be necessary for a standard at this level to be as detailed and complex as this standard is. Entities working with manufacturers, and knowledge gained from experience can develop adequate maintenance and testing programs. 4. Why are "Relays that respond to non-electrical inputs or impulses (such as, but not limited to, vibration, pressure, seismic, thermal or gas accumulation)..." not included? The output contacts from these devices are oftentimes connected in tripping or control circuits to isolate problem equipment. 5. Due to the critical nature of the trip coil, it must be maintained more frequently if it is not monitored. Trip coils are also considered in the standard as being part of the control circuitry. Table 1-5 has a row labeled "Unmonitored Control circuitry associated with protective functions", which would include trip coils, has a "Maximum Maintenance Interval" of "12 Calendar Years". Any control circuit could fail at any time, but an unmonitored control circuit could fail, and remain undetected for years with the times specified in the Table (it might only be 6 years if I understand that as being the trip test interval specified in the table). Regardless, if a breaker is unable to trip because of control circuit failure, then the system must be operated in

Voter	Entity	Segment	Vote	Comment
				real time assuming that that breaker will not trip for a fault or an event, and backup facilities would be called upon to operate. Thus, for a line fault with a "stuck" breaker (a breaker unable to trip), instead of one line tripping, you might have many more lines deloaded or tripped because of a bus having to be cleared because of a breaker failure initiation. The bulk electric system would have to be operated to handle this contingency. 6. In reference to the FAQ document, Section 5 on Station dc Supply, Question K, clarification is needed with respect to dc supplies for communication within the substation. For example, if the communication systems were run off a separate battery in separate area in a substation, would the standard apply to these batteries or not? 7. To define terms only as they are used in PRC-005-2 is inviting confusion. Although they may be unique to PRC-005-2, some or all of them may be used in future standards, some already may be used in existing standards, and may or may not be deliberately defined. Consistency must be maintained, not only for administrative purposes, but for effective technical communications as well. 8. What is the definition of "Maintenance" as used in the table column "Maximum Maintenance Interval"? Maintenance can range from cleaning a relay cover to a full calibration of a relay. 9. A control circuit is not a component, it is made up of components. 10. Sub-requirement 1.5 needs to be clarified. It is not clear what "Identify calibration tolerances or other equivalent parameters..." means, and may be subject to different interpretations by entities and compliance enforcement personnel. 11. In the Implementation plan for Requirement R1, recommend changing "six" to fifteen. This change would restore the 3-month time difference that existed in the previous draft, between the durations of the implementation periods for jurisdictions that do and do not require regulatory approval. It will ensure equity for those entities located in jurisdictions that do not require regulatory approval, as is the case in Ontario. 12. The 'box' for "Monitored Station dc supply..." in Table 1-4 is not clear. It seems to continue to the next page to a new box. There are multiple activities without clear delineation. Regarding station service transformers, 13. Item 4.2.5.5 under Applicability should be deleted. The purpose of this standard is to protect the BES by clearing generator, generator bus faults (or other electrical anomalies associated with the generator) from the BES. Having this standard apply to generator station service transformers, that have no direct connection to the BES, does meet this criteria. The FAQs

Voter	Entity	Segment	Vote	Comment
				(III.2.A) discuss how the loss of a station service transformer could cause the loss of a generating unit, but this is not the purpose of PRC-005. Using this logic than any system or device in the power plant that could cause a loss of generation should also be included. This is beyond the scope of the NERC standards.

Response: **Thank you for your comments.**

1. The SDT believes that the table headings are appropriate as reflected in the draft standard.

2. Please see the SDT's response to ISO New England Inc. in the formal Standard Comments

3. The intervals and activities specified are believed by the SDT to be technically effective, in a fashion that may be consistently monitored for compliance. Further, FERC Order 693 directs NERC to establish maximum allowable intervals, which implies that minimum activities also need to be prescribed. If an entities' experience is that components require less-frequent maintenance, a performance-based program in accordance with R3 and Attachment A is an option.

4. The SDT concentrated their efforts on protective relays which use the entire group of component types within the Protection System definition. Also, there is currently no technical basis for the maintenance of the devices which respond to non-electrical quantities on which to base mandatory standards related either to activities or intervals. Absent such a technical basis, we are currently unable to establish mandatory requirements, but may do so in the future if such a technical basis becomes available.

5. According to Table 1-5, trip coils of interrupting devices must be verified to operate every 6 years, rather than the 12-year interval. You can maintain these devices more frequently if you desire

6. With respect to dc supply associated only with communication systems, we prescribe, within Table 1-2, that the communications system must be verified as functional every 3 months, unless the functionality is verified by monitoring. The specific station dc supply requirements (Table 1-4) do not apply to the dc supply associated only with communications systems. The SDT decided to eliminate the FAQ document and incorporate the FAQ's contents into the Supplementary Reference Document as appropriate. The SDT considered your comments during this activity.

7. The SDT has proposed these terms for use only within PRC-005-2 because we are concerned that other uses of these terms, either now or in the future, may not be consistent with the terms used here. They are defined only for clarify within this standard. The SDT will confirm with NERC staff that this approach is acceptable.

8. As used in the "Maximum Maintenance Interval" column title of the table, maintenance refers to whatever activities are specified in the Activities column. The term is capitalized in the column title in conformance with normal editorial practice as a title, rather than as a definition.

9. For purposes of this standard, the control circuit is defined as one component type.

Voter	Entity	Segment	Vote	Comment
10. The SDT has determined that the fundamental concerns of Requirement R1, Part 1.5 and the associated changes are addressed within the PSMP definition, and that Requirement R1, Part 1.5 is not necessary; therefore, it has been removed. Requirement R4 has also been re-drafted to address various related concerns noted within comments. The associated VSL has also been revised. Please see Supplementary Reference Document, Section 8 for a discussion of this. **11. In consideration of your comment, "six" has been modified to "twelve" in the Implementation Plan for Requirement R1, making it consistent with the remainder of the Implementation Plan Please see the SDT's response to NPPC in the formal Standard Comments.** **12. Table 1-4 has been further modified for clarity.** **13. In response to many comments, including yours, the SDT has removed 4.2.5.5 from the Applicability of the standard.**				
Brenda Powell	Constellation Energy Commodities Group	6	Negative	1. The applicability has included more generation protective components. The current PRC-005 guidance states that only Station Service transformers for plants 75 MVA and up should be included. The proposed standard includes all station service transformers, regardless of plant size or connection (via generator or system). Constellation Energy Commodities Group does not see the reliability benefits of this increased scope. 2. R1.4 states that all monitoring attributes of all components must be listed and identified. For most generation facilities, it is more efficient to calibrate/check the entire protective system while the plant is in an outage, regardless of a component's monitoring capabilities. This requirement would require those facilities to maintain a list of attributes that won't ever be used, and would not alter their testing frequency. What if an entity were found non-compliant in the situation that was just described? It does not affect the reliability of the BES and therefore R1.4 should be removed. 3. M1 doesn't include a measure for R1.4. It just implies that a facility must maintain a list. 4. The battery listing in the attached table is still too prescriptive. If unmonitored, there should be a quarterly and yearly check, which is implied, but it is then broken out by battery type to be more prescriptive. 5. PTs and CTs are mentioned, but it seems as though the drafting team wants a facility to only test the outputs to ensure they are working properly. To clarify this, Constellation Energy Commodities Group suggests rewording the testing verbiage for PTs and CTs.
Response: **Thank you for your comments.** **1. Section 4.2.5 of "Applicability" specifies that only Generation Facilities that are part of the BES are included.** **2. The SDT disagrees; Requirement R1, Part 1.4 supports Requirement R1, Part 1.2, and seems necessary to assure that entities have appropriately applied the longer intervals associated with monitored components. However, in consideration to your comment the**				

Voter	Entity	Segment	Vote	Comment
SDT has revised Requirement R1, Part 1.4 and has also removed Requirement R2 because of redundancy to Requirement R1, Part 1.4. 3. Measure M1 has been revised in consideration of your comment. 4. The activities for different battery types are addressed separately because the relevant activities differ. 5. The SDT intends that the instrument transformer and associated circuitry be verified to be functional, but believes that customary apparatus maintenance (dielectric, infrared, etc) are not relevant to PRC-005-2.				
Louis S Slade	Dominion Resources, Inc.	6	Negative	Dominion is opposed to this version because Requirement R1.5 is overly prescriptive, requiring an extraordinary level of documentation, with little anticipated improvement in reliability.
Response: Thank you for your comments. The SDT has determined that the fundamental concerns of Requirement R1, Part 1.5 and the associated changes are addressed within the PSMP definition, and that Requirement R1, Part 1.5 is not necessary; therefore, it has been removed. Requirement R4 has also been re-drafted to address various related concerns noted within comments. The associated VSL has also been revised. Please see Supplementary Reference Document, Section 8 for a discussion of this.				
Terri F Benoit	Entergy Services, Inc.	6	Negative	The restructured tables are generally much clearer and the SDT is to be commended on their efforts. 1. However, we believe the Alarming Point Table needs additional clarification with regard to the Maximum Maintenance Interval. If an "alarm producing device" is considered to be a device such as an SCADA RTU, individual entity intervals for such a device would differ, and there isn't necessarily a maximum interval established as there is for Protection System components. Also, if an entity's alarm producing device maintenance is performed in sections and triggered by segment or component maintenance, there would essentially be multiple maximum intervals for the alarm producing device of that entity. On that basis, we suggest the interval verbiage be revised to "When alarm producing device or system is verified, or by sections as per the monitored component/protection system specified maximum interval as applicable". Alternately, if the intention is to establish maximum intervals as simply being no longer than the individual component maintenance intervals as we suggest for inclusion above, then the verbiage should be revised to "When alarm producing component/protection system segment is verified". In either case are we to interpret monitored components with attributes which allow for no periodic maintenance specified as not requiring periodic alarm verification? 2. R1.5 calls for "identification of calibration tolerances or equivalent parameters..." whereas the associated VSL references "failure to establish calibration criteria...." and is listed as high. If R1.5 is to be included in this standard, then we suggest the severity level of a failure to simply "identify" or document such calibration tolerances would be analogous to

Voter	Entity	Segment	Vote	Comment
				the severity level(s) of a "failure to specify one (or Cthe severity level should be consistent with the other elements of R1. Both cases appear to be more of a documentation issue as opposed to a failure to implement. Shouldn't a failure to implement any necessary calibration tolerance be accounted for in R4? R1.5 calls for "identification of calibration tolerances or equivalent parameters for each Protection System Component Type....". We believe the Supplementary Reference document should provide additional information and examples of calibration tolerances or equivalent parameters which would be expected for the various component types. Especially for any "equivalent" parameters which would be required for compliance for a component type besides protective relays. Adding Requirement 1.5 is a significant revision and raises questions as to how broadly an accuracy or equivalent parameter requirement and associated documentation would need to be addressed by entities and/or will be measured for compliance. Discussion on this new requirement does not seem to be addressed anywhere in the FAQ or Supplementary Reference documents. Additionally, to the best of our knowledge, the need for such a requirement was not brought up as a concern or comment on the prior draft version of this standard, and in the context of a requirement need, we don't believe it has been attributed to or actually poses any significant reliability risk. We do not believe this requirement is justified.
Response: **Thank you for your comments.** **1. The Maximum Maintenance Interval column entry in Table 2 has been revised to state, "When alarm producing Protection System component is verified" to clarify this.** **2. The SDT has determined that the fundamental concerns of Requirement R1, Part 1.5 and the associated changes are addressed within the PSMP definition, and that Requirement R1, Part 1.5 is not necessary; therefore, it has been removed. Requirement R4 has also been re-drafted to address various related concerns noted within comments. The associated VSL has also been revised. Please see Supplementary Reference Document, Section 8 for a discussion of this.**				
Mark S Travaglianti	FirstEnergy Solutions	6	Negative	Please see FirstEnergy's comments submitted separately through the comment period posting.
Response: **Thank you for your comments. Please see our response to your comments submitted separately through the formal comment period.**				
Richard L. Montgomery	Florida Municipal Power Agency	6	Negative	1. UFLS and UVLS maintenance and testing is greatly expanded, e.g., we interpreted PRC-008/011 as being only the UFLS/UVLS equipment. The new PRC-005 sweeps in other protection system components, e.g., communications (probably not applicable), voltage and current sensing devices (e.g., instrument transformers), Station DC supply, control circuitry.

Voter	Entity	Segment	Vote	Comment
				What's key about this is that these components are all part of distribution system protection, so, these activities would not be covered by other BES protection system maintenance and testing. I'm sure we are testing batteries and the like, but, we are probably not testing battery chargers and control circuity, and, in many cases distribution circuits are such that it is very difficult, if not impossible, to test control circuitry to the trip coil of the breaker without causing an outage of the customers on that distribution circuit. There is no real reliability need for this either. Unlike Transmission and Generation Protection Systems which are needed to clear a fault and may only have one or two back-up systems, there are thousands and thousands of UFLS relays and if one fails to operate, it will not be noticeable to the event. It does make sense to test the relays themselves in part to ensure that the regio0nsl UFLS program is being met, but, to test the other protection system components is not worthwhile. Note that DC Supplies and most of the control circuitry of distribution lines are "tested" frequently by distribution circuits clearing faults such as animals, vegetation blow-ins, lightning, etc., on distribution circuits, reducing the value of testing to just about null. However, this version is better than prior versions because it essentially requires the entity to determine it's own period of maintenance and testing for UFLS/UVLS for DC Supply and control circuitry. 2. Applicability, 4.2.1, should reflect the Y&W and Tri-State interpretation (Project 2009-17) of "transmission Protection System" and should state: "Protection Systems applied on, or designed to provide protection for a BES Facility and that trips a BES Facility" 3. Applicability, 4.2. - does not reflect the interpretation of Project 20009-10 that excludes non-electrical protection (e.g., sudden pressure relays) and auxiliary relays. Because the definition of Protection System (recently approved) does not clearly exclude "non-electrical" protection, the Applicability section should. For instance,, a vibration monitor, steam pressure, etc. protection of generators, sudden pressure protection of transformers, etc. should not be included in the standard. An alternative is to change the definition of Protection System to make sure it only includes electrical the VRF of R1 should be Low since the attached tables are essentially the PSMP.

Response: **Thank you for your comments.**

1. **For UFLS and UVLS, the maintenance activities related to station dc supply and control circuitry are somewhat constrained relative to similar activities for Protection Systems in general. Regardless, without proper functioning of these component types, UFLS and UVLS will not respond as expected, and will therefore degrade BES system reliability, particularly during the stressed system conditions for which UFLS and UVLS are installed. Relative to control circuitry, Table 1-5 specifically**

Voter	Entity	Segment	Vote	Comment
				excludes UFLS and UVLS from maintenance activities related to the interrupting device trip coil. **2. This interpretation is not yet approved by FERC. When this interpretation is approved, the SDT will incorporate it within PRC-005-2. However, the SDT has made changes to Applicability 4.2.1.** **3. The recently-balloted revision of the definition of Protection System, which has been approved by the NERC Board of Trustees and will soon be filed with FERC for approval, clearly includes only protective relays that respond to electrical quantities. As for auxiliary relays, the interpretation to which you refer states that they are not explicitly included, but are included to the degree that an entity's Protection System control circuitry addresses them(which has been identified as a reliability gap), and are being added to PRC-005-2 to resolve the gap.**
Thomas E Washburn	Florida Municipal Power Pool	6	Negative	1. UFLS and UVLS maintenance and testing is greatly expanded, e.g., we interpreted PRC-008/011 as being only the UFLS/UVLS equipment. The new PRC-005 sweeps in other protection system components, e.g., communications (probably not applicable), voltage and current sensing devices (e.g., instrument transformers), Station DC supply, control circuitry. What's key about this is that these components are all part of distribution system protection, so, these activities would not be covered by other BES protection system maintenance and testing. I'm sure we are testing batteries and the like, but, we are probably not testing battery chargers and control circuity, and, in many cases distribution circuits are such that it is very difficult, if not impossible, to test control circuitry to the trip coil of the breaker without causing an outage of the customers on that distribution circuit. There is no real reliability need for this either. Unlike Transmission and Generation Protection Systems which are needed to clear a fault and may only have one or two back-up systems, there are thousands and thousands of UFLS relays and if one fails to operate, it will not be noticeable to the event. It does make sense to test the relays themselves in part to ensure that the regio0nsl UFLS program is being met, but, to test the other protection system components is not worthwhile. Note that DC Supplies and most of the control circuitry of distribution lines are "tested" frequently by distribution circuits clearing faults such as animals, vegetation blow-ins, lightning, etc., on distribution circuits, reducing the value of testing to just about null. However, this version is better than prior versions because it essentially requires the entity to determine it's own period of maintenance and testing for UFLS/UVLS for DC Supply and control circuitry. 2. Applicability, should reflect the Y&W and Tri-State interpretation (Project 2009-17) of "transmission Protection System" and should state: "Protection Systems applied on, or designed to provide protection for a BES Facility and that trips a BES Facility" 3. Applicability, 4.2. - does not reflect the interpretation of Project 20009-10 that

Voter	Entity	Segment	Vote	Comment
				excludes non-electrical protection (e.g., sudden pressure relays) and auxiliary relays. Because the definition of Protection System (recently approved) does not clearly exclude "non-electrical" protection,the Applicability section should. For instance,, a vibration monitor, steam pressure, etc. protection of generators, sudden pressure protection of transformers, etc. should not be included in the standard. An alternative is to change the definition of Protection System to make sure it only includes electrical the VRF of R1 should be Low since the attached tables are essentially the PSMP.
Response: **Thank you for your comments.** **1. For UFLS and UVLS, the maintenance activities related to station dc supply and control circuitry are somewhat constrained relative to similar activities for Protection Systems in general. Regardless, without proper functioning of these component types, UFLS and UVLS will not respond as expected, and will therefore degrade BES system reliability, particularly during the stressed system conditions for which UFLS and UVLS are installed. Relative to control circuitry, Table 1-5 specifically excludes UFLS and UVLS from maintenance activities related to the interrupting device trip coil.** **2. This interpretation is not yet approved by FERC. When this interpretation is approved, the SDT will incorporate it within PRC-005-2. However, the SDT has made changes to Applicability 4.2.1.** **3. The recently-balloted revision of the definition of Protection System, which has been approved by the NERC Board of Trustees and will soon be filed with FERC for approval, clearly includes only protective relays that respond to electrical quantities. As for auxiliary relays, the interpretation to which you refer states that they are not explicitly included, but are included to the degree that an entity's Protection System control circuitry addresses them(which has been identified as a reliability gap), and are being added to PRC-005-2 to resolve the gap.**				
Silvia P Mitchell	Florida Power & Light Co.	6	Negative	This draft standard is too perscriptive. 1. Requirement R1, Part 1.5 would be overwhelming if approved. Requirement R1, Part 1.5 should be deleted. 2. Requirement R4, Part 4.2 phrase "established in accordance with Requirement R1, Part 1.5" should be deleted. The standard without these additional requirements would be sufficient to establish that the Protection System is maintained and protects the BES. 3. Table 1-2 Component Type Communications Systems Maximum Maintenance Interval of 3 Calendar Months to verify that the communications system is functional for any unmonitored communications system is unyielding. Most communication failures are caused by power supply failures which Next Era does monitor. Based on experience and monitoring of communication power supplies, 12 calendar months would be adequate. The maximum maintenance interval should be changed from 3 calendar months to 12 calendar months. 4. Table 1-4, Component Type Station dc Supply Maximum Maintenance Interval of 3 Calendar Months to inspect electrolyte levels on "Any unmonitored station

Voter	Entity	Segment	Vote	Comment
				dc supply not having the monitoring attributes of a category below. (Excluding UFLS and UVLS)" is too stringent. Verifying battery charger float voltage every 18 calendar months is sufficient to prevent excessive gassing and water loss of battery cells. The maximum maintenance interval should be changed from 3 calendar months to 6 calendar months. 5. Table 1-4, Component Type Station dc Supply Maximum Maintenance Interval of 3 Calendar Months to measure the internal ohmic values on "Unmonitored Station dc supply with Valve Regulated Lead-Acid (VRLA) batteries that does not have the monitoring attributes of a category below. (excluding UFLS and UVLS)" is too stringent. With the standard's requirement to verify the float voltage every 18 calendar months, measuring the internal ohmic values every 6 calendar months would be adequate. The maximum maintenance interval should be changed from 3 calendar months to 6 calendar months.
Response: **Thank you for your comments.** **1. The SDT has determined that the fundamental concerns of Requirement R1, Part 1.5 and the associated changes are addressed within the PSMP definition and that Requirement R1, Part 1.5 is not necessary; therefore, it has been removed.** **2. Requirement R4 has also been re-drafted to address various related concerns noted within comments. Please see Supplementary Reference Document, Section 8 for a discussion of this. The associated VSL has also been revised.** **3. The activity to which you refer is an inspection-based activity based on overall functionality, and addresses functionality of various communications technologies. If an entity monitors the power supply (as suggested), doing so addresses one portion of the functionality, but does not address channel integrity, etc.** **4. The SDT disagrees, and believes that the specified activities, at the specified intervals, are appropriate.** **5. The standard has been revised as you suggested.**				
Paul Shipps	Lakeland Electric	6	Negative	Small entities with only one or two BES substations may not have enough components to take advantage of the expanded maintenance intervals afforded by a performance-based maintenance program. Aggregating these components across different entities doesn't seem too logical considering the variations at the sub-component level (wire gauge, installation conditions, etc.)
Response: **Thank you for your comments. Entities are not required to use performance-based maintenance programs. Requirement R3 and Attachment A are provided for the use of entities that can (and desire to) avail themselves of this approach.**				
Eric Ruskamp	Lincoln Electric System	6	Affirmative	While the proposed draft of the standard is acceptable as currently written, LES would like the drafting team to consider the following comments. (1) Table 1-1 should state "Test and calibrate (if necessary)" in the first section under activities. If a relay passes the test, there is no need to calibrate it.

Voter	Entity	Segment	Vote	Comment
				Therefore, not all relays will require calibration. (2) Please explain the drafting team's reason for not checking the trip coils of breakers in the UFLS/UVLS schemes but ensuring that all others are operated every six years. It would appear that they can all be lumped into the same group one way or another. (3) In regards to Specific Gravity Testing, many people do not perform the specific gravity test routinely if they perform the individual cell internal ohmic test routinely. LES asks the drafting team to consider allowing the internal cell ohmic test as a substitute for the specific gravity test.
Response: **Thank you for your comments.** **1. Table 1-1 has been modified as you suggest.** **2. This is an intentional difference between UFLS/UVLS and the remainder of the Protection Systems addressed within the Standard, because of the distributed nature of UFLS/UVLS and because these devices are usually tripping distribution system elements.** **3. Table 1-4 does not specify specific gravity testing.**				
Brad Jones	Luminant Energy	6	Negative	Luminant commends the PRC-005-2 Standard Drafting Team for its quality efforts in producing this version of the Standard however; Luminant must cast a negative ballot vote for this present version of the Standard. The negative vote against the present version of PRC-005-2 is solely based on the addition of Requirement R1 Part 1.5 with its associated reference to it in Requirement R4 Part 4.2 and the VSL table. It is Luminant's opinion that this new Requirement as written subjects all Transmission Owners, Generation Owners and Distribution Providers to vague interpretations of a requirement that cannot be complied with because it is impossible for any of them to draft the necessary documentation to be compliant with the Standard. As stated in the High VSL associated with Part 1.5 of Requirement R1 all owners will fail "to establish calibration tolerance or equivalent parameters to determine if every individual discrete piece of equipment in a Protection System is within acceptable parameters." It is Luminant's opinion that the measurement of acceptable performance during maintenance and testing activities can be accomplished with a Pass/Fail type of documentation on a test form. No company can effectively establish calibration tolerance parameters for an entire "component type" of the Protection System. Doing so could be detrimental to the reliability of the grid. Parameters are dependent on the location, application and situation specific to each Protection System device.

Voter	Entity	Segment	Vote	Comment
				The inclusion of Part 1.5 of Requirement R1 is a significant addition to the standard, and by NERC Rules of Procedure requires the input and consideration of the full Standard Drafting Team.
Response: **Thank you for your comments. The SDT has determined that the fundamental concerns of Requirement R1, Part 1.5 and the associated changes are addressed within the PSMP definition, and that Requirement R1, Part 1.5 is not necessary; therefore, it has been removed. Requirement R4 has also been re-drafted to address various related concerns noted within comments. The associated VSL has also been revised. Please see Supplementary Reference Document, Section 8 for a discussion of this.**				
Daniel Prowse	Manitoba Hydro	6	Negative	1. Implementation Plan (Timeline) for R1: In areas not requiring regulatory approval, the 6 month time frame proposed for R1 is not achievable and is not consistent with areas requiring regulatory approval. To be consistent, the effective date for R1 in jurisdictions where no regulatory approval is required should be the first day of the first calendar quarter 12 months after BOT approval. 2. VSLs: The high VSL for R1 "Failed to include all maintenance activities relevant for the identified monitoring attributes specified in Tables 1-1 through 1-5" may be interpreted in different ways and should be further clarified. 3. Table 1-4: The requirements for batteries listed in Table 1-4 do not appear to be consistent with the comments in the FAQ Section (V 1A Example 1). Please see comments submitted during the formal comment period for further detail. 4. Table 1-4: The requirement for a 3 month check on electrolyte level seems too frequent based on our experience. We would like to point out that although IEEE std 450 (which seems to be the basis for table 1-4) does recommend intervals it also states that users should evaluate these recommendations against their own operating experience.
Response: **Thank you for your comments.** **1. In consideration of your comment, "six" has been modified to "twelve" in the Implementation Plan for R1, making it consistent with the remainder of the Implementation Plan.** **2. The SDT does not understand your concern; further details are needed.** **3. The SDT decided to eliminate the FAQ document and incorporate the FAQ's contents into the Supplementary Reference Document as appropriate. The SDT considered your comments during this activity.** **4. The SDT believes that the 3-month interval specified in the Standard is appropriate.**				
Joseph O'Brien	Northern Indiana Public Service Co.	6	Negative	We disagree with the practice of performing calibration checks on non microprocessor relays every 6 years.
Response: **Thank you for your comments. The SDT considers it important that calibration checks be performed on non microprocessor relays no less frequently than every 6 years.**				

Voter	Entity	Segment	Vote	Comment
James D. Hebson	PSEG Energy Resources & Trade LLC	6	Negative	The PSEG Companies do not agree with the Facilities as currently described in section 4.2.5.5. Please refer to detailed comments provided in the formal Comment Form.
Response: **Thank you for your comments. Please see our response to your comments from the formal comment period.**				
Dennis Sismaet	Seattle City Light	6	Negative	The proposed Standard PRC-005-2 is an improvement over the previous draft in that it provides more consistency in maintenance and testing duration internals. Notwithstanding, two issues are of concern to Seattle City Light such that it is compelled to vote no: 1) the establishment of bookends for standard verification and 2) the implementation timelines for entities with systems where electro-mechanical relays still compose a significant number of components in their protection systems. 1. Bookends: Proposed Standard PRC-005-2 specifies long inspection and maintenance intervals, up to 12 years, which correspondingly exacerbates the so-called “bookend” issue. To demonstrate that interval-based requirements have been met, two dates are needed - bookends. Evidencing an initial date can be problematic for cases where the initial date would occur prior to the effective date of a standard. NERC has provided no guidance on this issue, and the Regions approach it differently. Some, such as Texas Regional Entity, require initial dates beginning on or after the effective date of a Standard. Compliance with intervals is assessed only once two dates are available that occur on or after a standard took effect. Other regions, such as Western Electricity Coordinating Council (WECC), require that entities evidence an initial date prior to the effective date of a standard. For WECC, compliance with intervals is assessed as soon as a standard takes effect. Such variation makes application of standards involving bookends uncertain, arbitrary, capricious, and in the case of WECC, possibly illegal. Proposed Standard PRC-005-2 will be another such standard. Indeed this Standard will involve by far the largest number of bookends of any NERC standard - many thousands for a typical entity. Furthermore, the long inspection and maintenance intervals introduced in the draft will require entities in WECC, for instance, to evidence initial bookend dates prior to the date original PRC-005-1 took effect. For the 12-year intervals for CTs and VTs in proposed Standard PRC-005-2, many initial dates will occur prior to the 2005 Federal Power Act that authorized Mandatory Reliability Standards and even reach back before the 2003 blackout that catalyzed the effort to pass the Federal Power Act. As a result, many entities

Voter	Entity	Segment	Vote	Comment
				in WECC maybe at risk of being found in violation of proposed Standard PRC-005-2 immediately upon its implementation. Seattle City Light requests that NERC address the bookends issue, either within proposed Standard PRC-005-2 or in a separate, concurrent document. 2. Legacy Systems: Many entities still have legacy protection systems that rely upon electro-mechanical relays. Effective testing approaches differ between electro-mechanical and digital relay systems. Thus, although the proposed standard rightly looks to the future of digital relays by specifying testing and maintenance focused on protection systems as a whole, the proposed implementation timelines create a level of hardship for those utilities with legacy systems. In example, auxilary relay and trip coil testing may be essential to prove the correct operation of complex, multi-function digital protection systems. However, for legacy systems with single-function electro-mechanical components, the considerable documentation and operational testing needed to implement and track such testing is not necessarily proportional to the relative risk posed by the equipment to the bulk electric system. Performance testing of electro-mechanical systems, particularly regarding control circuits, will require extensive disconnection and reconnection of portions of the circuits. Such activities will likely cause far more problems on restoration-to-service than they will locate and correct. As such, to assist entities in their implementation efforts, we believe provision of alternatives are necessary, such as additional implementation time through phasing and/or through technical feasibility exceptions.
Response: Thank you for your comments. 1. This issue has been addressed by NERC in Compliance Application Notice CAN-008 "PRC-005 R2 Pre-June 18 Evidence". 2. Please see Sections 8 and 15.3 of the Supplementary Reference Document for a discussion on this topic. FERC Order 693 directs that NERC establish requirements for the maintenance of the Protection System and control circuitry is a portion thereof. Therefore, requirements for the maintenance of the control circuitry are necessary and the SDT has developed those requirements in a fashion that affords entities with the opportunity to best meet those requirements.				
David F. Lemmons	Xcel Energy, Inc.	6	Negative	We feel that several improvements were made since the last draft. However, we feel that some gaps exist that should be addressed before moving this project forward. We have detailed our issues in our formal comments.
Response: Thank you for your comments. Please see our responses to your formal comments.				
Jim R Stanton	SPS Consulting Group Inc.	8	Negative	1. The standard as written is wildly prescriptive and violates the concept of "what and not how." The standard and its Tables seek to prescribe in detail maintenance and testing processes which should be left up to the owners and operators of the protection systems.

Voter	Entity	Segment	Vote	Comment
				2. References to Tables 1-5 should be deleted from the standard itself and moved to a reference section.
Response: **Thank you for your comments.** **1. The intervals and activities specified are believed by the SDT to be technically effective, in a fashion that may be consistently monitored for compliance. Further, FERC Order 693 directs NERC to establish maximum allowable intervals, which implies that minimum activities also need to be prescribed. If an entities' experience is that components require less-frequent maintenance, a performance-based program in accordance with Requirement R3 and Attachment A is an option.** 2. **Tables 1-1 through 1-5 are considered by the SDT to be an integral part of the requirements of the standard and thus belong within the Standard.**				
Louise McCarren	Western Electricity Coordinating Council	10	Affirmative	Our affirmative vote reflects our belief that the proposed PRC-005-2 is an overall improvement to the four standards that it would replace. We also believe that it is appropriate to address maintenance and testing of all protection systems in one standard rather than in four individual standards.
Response: **Thank you for your comments and support.**				

END OF REPORT

Consideration of Comments on the 4th Draft of Protection System Maintenance and Testing — Project 2007-17

The Protection System Maintenance and Testing Drafting Team thanks all commenters who submitted comments on the 4th draft of the Protection System Maintenance standard, its implementation plan, and the associated reference document. The standard and associated documents were posted for a 30-day public comment period from April 13, 2011 through May 13, 2011. Stakeholders were asked to provide feedback on the standard and associated documents through a special electronic comment form. There were 55 sets of comments, including comments from more than 176 people from approximately 103 companies representing 10 of the 10 Industry Segments as shown in the table on the following pages.

All comments submitted may be reviewed in their original format on the standard's project page:

http://www.nerc.com/filez/standards/Protection_System_Maintenance_Project_2007-17.html

In addition, a successive ballot of the standard was conducted from May 3-13, 2011, and a non-binding poll of the Violation Risk Factors and Violation Severity Levels was conducted from May 3-16, 2011 and comments from the ballot and poll have been included in this report.

If you feel that your comment has been overlooked, please let us know immediately. Our goal is to give every comment serious consideration in this process! If you feel there has been an error or omission, you can contact the Vice President and Director of Standards, Herb Schrayshuen, at 609-452-8060 or at herb.schrayshuen@nerc.net. In addition, there is a NERC Reliability Standards Appeals Process.[1]

Summary Consideration of all Comments Received:

Purpose:

The SDT modified the Purpose to state, "To document and implement programs for the maintenance of all Protection Systems affecting the reliability of the Bulk Electric System (BES) so that these Protection Systems are kept in working order" in response to previous Quality Review comments.

Applicability:

Several comments were offered, suggesting that PRC-005-2 needs to be consistent with the interpretation in Project 2009-17, now implemented as PRC-005-1a, and the SDT modified Applicability 4.2.1 for better consistency with the interpretation 4.2.1 as shown below:

> 4.2.1. Protection Systems that are installed for the purpose of detecting faults on BES Elements (lines, buses, transformers, etc.).

Requirement R1:

[1] The appeals process is in the Reliability Standards Development Procedures: http://www.nerc.com/standards/newstandardsprocess.html.

Requirement R1 was modified as shown below for improved specificity, based on stakeholder comments:

> R1. Each Transmission Owner, Generator Owner, and Distribution Provider shall establish a Protection System Maintenance Program (PSMP) for its Protection Systems identified in Section 4.2.

Tables

Most commenters seemed to agree in general that the restructured tables added clarity, and some commenters offered assorted suggestions for further improvement. Minor clarifying changes were made to the Tables themselves, and additional discussion was added to the "Supplementary Reference and FAQ" to address various comments.

Implementation Plan

Some commenters noted that for entities not subject to regulatory approvals, the implementation plan should be longer so that all entities have sufficient time for implementation. The team did modify the Implementation Plan to provide for a lengthened implementation period for R1 and the less-than-1-calendar-year activities in R2 and R3 to allow entities not subject to regulatory approvals of 9 additional months following BOT approvals, and, for the remaining activities, of 12 additional months following BOT approvals, to be more consistent with the expected Regulatory Approval timelines. Additionally, all "calendar year" implementation periods were revised to "months" for additional clarity.

VLSs:

VSLs for Requirement R1

- Phased VSLs were added to address R1 Part 1.1, which was previously addressed only as a "Severe" VSL.
- A reference was added within the R1 VSL to Part 1.3.
- R1 High VSL was revised to add a reference to Table 2.

VSLs for Requirement R2

- One element of the R2 VSL was made binary (Severe), rather than "phased" (in two steps), in response to several comments.
- Many commenters pointed out an error (which was corrected by the SDT) within the VSL for R2, where the Lower and High VSLs contained identical text.

VSLs for Requirement R3

- The R3 VSLs were revised to replace "complete" with "implement and follow" for consistency with the Requirement.
- Other minor editorial changes were made throughout the VSLs in response to comments.

Supplementary Reference and FAQ

- The commenters were generally supportive of the reference document.

- Several questions regarding the enforceability of this document were posed, and the SDT explained that the document is a supporting reference and not enforceable – only standard requirements are enforceable.
- A variety of suggestions were offered regarding additional information for the document, which largely resulted in modifications to the Supplementary Reference document. One specific suggestion of note (resulting in additional discussion within the document) requested a FAQ regarding "Calendar Year".
- Several commenters posed questions regarding "grace periods" and "PSMPs established by entities that are more stringent than the requirements within the standard". No additional changes were made due to these questions. If an entity develops a PSMP that includes time intervals that are more stringent than those in the standard, the entity will be audited against the intervals in its PSMP.

Definitions:

- Several comments were offered regarding Maintenance Correctable Issues, and resulted in modifying this definition to be "…such that the deficiency cannot be corrected during the performance of the maintenance activity …"

Unresolved Minority Views:

- Many comments were offered objecting to the 3-calendar-month intervals for station dc supply and communications systems, and suggesting that a 3-calendar-month interval requires entities to schedule these activities for 2-calendar-months in order to assure compliance. The SDT did not modify the standard in response to these comments, and responded that the intervals were appropriate, and that entities should be able to assure compliance on a 3-calendar-month schedule by using program oversight. The "Supplementary Reference and FAQ" document was augmented with additional explanatory text.

- Several commenters were concerned that an entity has to be "perfect" in order to be compliant; the SDT responded that NERC Standards currently allow no provision for any degree of non-performance relative to the requirements.

- Several commenters continued to insist that "grace periods" should be allowed. The SDT continued to respond that grace periods would not be measurable.

- Several comments were offered questioning various aspects of Applicability 4.2.5.4 (generation auxiliary transformers). No changes were made in response to these comments, and responses were offered illustrating why these transformers are included.

- Many comments were offered, questioning the propriety of including distribution system Protection Systems, almost all related to UFLS/UVLS. The SDT explained that these Protection Systems are appropriate to be included for consistency with legacy standards PRC-008, PRC-011, and PRC-017, and noted that their inclusion is consistent with Section 202 of the NERC Rules of Procedure.

- Several comments were offered, objecting to the 6-calendar-year interval for lockout and auxiliary relays. The SDT declined to adopt the requested changes, and noted that these "electromechanical" devices with "moving parts" share failure mechanisms with electromechanical protective relays and that the intervals should be identical.

Index to Questions, Comments, and Responses

1. The SDT has restructured the Table for Station DC Supply, separating it into six sub-tables individually addressing the various different technologies. Do you agree that the restructured tables provide more clarity? If not, please provide specific suggestions for improvement. 18

2. The SDT has modified the Implementation Periods within the Implementation Plan. Do you agree with the changes? If not, please provide specific suggestions for improvement. 39

3. The SDT has modified the VSLs, VRFs and Time Horizons with this posting. Do you agree with the changes? If not, please provide specific suggestions for improvement. 47

4. The SDT has incorporated the FAQ document into the "Supplementary Reference" document and has provided the combined document as support for the Requirements within the standard. Do you have any specific suggestions for further improvements? 53

5. If you have any other comments on this Standard that you have not already provided in response to the prior questions, please provide them here. 64

The Industry Segments are:

1 — Transmission Owners
2 — RTOs, ISOs
3 — Load-serving Entities
4 — Transmission-dependent Utilities
5 — Electric Generators
6 — Electricity Brokers, Aggregators, and Marketers
7 — Large Electricity End Users
8 — Small Electricity End Users
9 — Federal, State, Provincial Regulatory or other Government Entities
10 — Regional Reliability Organizations, Regional Entities

Group/Individual		Commenter	Organization	Registered Ballot Body Segment									
				1	2	3	4	5	6	7	8	9	10
1.	Group	Guy Zito	Northeast Power Coordinating Council										X

	Additional Member	Additional Organization	Region	Segment Selection
1.	Alan Adamson	New York State Reliablity Council, LLC	NPCC	10
2.	Gregory Campoli	New York Independent System Operator	NPCC	2
3.	Kurtis Chong	Independent Electricity System Operator	NPCC	2
4.	Sylvain Clermont	Hydro-Quebec TransEnergie	NPCC	1
5.	Chris de Graffenried	Consolidated Edison Co. of New York, Inc.	NPCC	1
6.	Gerry Dunbar	Northeast Power Coordinating Council	NPCC	10
7.	Brian Evans-Mongeon	Utility Services	NPCC	8
8.	Mike Garton	Dominion Resources Services, Inc.	NPCC	5
9.	Brian L. Gooder	Ontario Power Generation Incorporated	NPCC	5
10.	Kathleen Goodman	ISO - New England	NPCC	2
11.	Chantel Haswell	FPL Group, Inc.	NPCC	5
12.	David Kiguel	Hydro One Networks Inc.	NPCC	1
13.	Michael R. Lombardi	Northeast Utilities	NPCC	1
14.	Randy MacDonald	New Brunswick Power Transmission	NPCC	1

Group/Individual		Commenter	Organization		Registered Ballot Body Segment									
					1	2	3	4	5	6	7	8	9	10
15.	Bruce Metruck	New York Power Authority	NPCC	6										
16.	Lee Pedowicz	Northeast Power Coordinating Council	NPCC	10										
17.	Robert Pellegrini	The United Illuminating Company	NPCC	1										
18.	Si Truc Phan	Hydro-Quebec TransEnergie	NPCC	1										
19.	Saurabh Saksena	National Grid	NPCC	1										
20.	Michael Schiavone	National Grid	NPCC	1										
21.	Wayne Sipperly	New York Power Authority	NPCC	5										
22.	Donald Weaver	New Brunswick System Operator	NPCC	1										
23.	Ben Wu	Orange and Rockland Utilities	NPCC	1										
24.	Peter Yost	Consolidated Edison Co. of New York, Inc.	NPCC	3										
2.	Group	Marie Knox	MISO Standards Collaborators			X								
	Additional Member	Additional Organization	Region	Segment Selection										
1.	Joe O'Brien	NIPSCO	RFC	6										
2.	Gary Carlson	Michigan Public Power Agency	RFC	3										
3.	Group	Mike Garton	Electric Market Policy		X		X		X	X				
	Additional Member	Additional Organization	Region	Segment Selection										
1.	Michael Gildea	Dominion Resources Services, Inc.	SERC	3										
2.	Michael Crowley	Dominion Virginia Power	SERC	1										
3.	Louis Slade	Dominion Resources Services, Inc.	RFC	6										
4.	Group	Terry L. Blackwell	Santee Cooper		X		X		X	X				
	Additional Member	Additional Organization	Region	Segment Selection										
1.	S. T. Abrams	Santee Cooper	SERC	1										
2.	Glenn Stephens	Santee Cooper	SERC	1										
3.	Rene Free	Santee Cooper	SERC	1										
4.	Kevin Bevins	Santee Cooper	SERC	1										
5.	Bridgett Coffman	Santee Cooper	SERC	1										

Group/Individual		Commenter	Organization	Registered Ballot Body Segment									
				1	2	3	4	5	6	7	8	9	10
5.	Group	Denise Koehn	Bonneville Power Administration	X		X		X	X				

	Additional Member	Additional Organization	Region	Segment Selection
1.	Dean Bender	BPA, Transmission, SPC Technical Svcs	WECC	1
2.	Jason Burt	BPA, Transmission, RAS and Data Systems	WECC	1
3.	Robert France	BPA, Transmission, PSC Technical Svcs	WECC	1
4.	Mason Bibles	BPA, Transmission, Sub Maint and HV Engineering	WECC	1
5.	Deanna Phillips	BPA, Transmission, FERC Compliance	WECC	1

6.	Group	Jonathan Hayes	SPP reliability standard development Team		X								

	Additional Member	Additional Organization	Region	Segment Selection
1.	David Reilly	Oklahoma Gas and Electric	SPP	1, 3, 5
2.	Edwin Averill	Grand Rvier Dam Authority	SPP	1, 3, 5
3.	James Hutchinson	Oklahoma Gas and Electric	SPP	1, 3, 5
4.	Mahmood Safi	Omaha Public Power District	MRO	1, 3, 5
5.	Rick Bartlett	Independence Power & Light	SPP	1, 3, 5
6.	Sean Simpson	Board of Public Utilities, City of McPherson	SPP	1, 3, 5
7.	Mark Wurm	Board of Public Utilities, City of McPherson	SPP	1, 3, 5
8.	Joe Border	Board of Public Utilities, City of McPherson	SPP	1, 3, 5
9.	Michelle Corley	CLECO	SPP	1, 3, 5, 6

7.	Group	David Thorne	Pepco Holdings Inc	X		X							

	Additional Member	Additional Organization	Region	Segment Selection
1.	Carlton Bradshaw	Atlantic Electric		1

8.	Group	Dave Davidson	Tennessee Valley Authority	X				X					

	Additional Member	Additional Organization	Region	Segment Selection
1.	David Thompson	River Operations Engineering	SERC	NA
2.	Frank Cuzzort	Nuclear Power Engineering	SERC	NA

Group/Individual		Commenter	Organization		Registered Ballot Body Segment									
					1	2	3	4	5	6	7	8	9	10
3.	Robert Brown	Nuclear Power Engineering	SERC	NA										
4.	Robert Mares	Fossil Power Engineering	SERC	NA										
5.	Paul Barlett	Transmission O&M Support	SERC	NA										
6.	Pat Caldwell	Transmission O&M Support	SERC	NA										
7.	Rusty Hardison	Transmission O&M Support	SERC	NA										
8.	Jerry Findley	Communications/SCADA	SERC	NA										
9.	Group	Jose Landeros	Imperial Irrigation District		X		X	X		X				
	Additional Member	**Additional Organization**	**Region**	**Segment Selection**										
1.	Epifanio Martinez		WECC											
2.	Fernando Gutierrez		WECC											
3.	Gerardo Landeros		WECC											
4.	Tony Allegranza		WECC											
10.	Group	Ron Sporseen	PNGC Comment Group		X		X					X		
	Additional Member	**Additional Organization**	**Region**	**Segment Selection**										
1.	Bud Tracy	Blachly-Lane Electric Cooperative	WECC	3										
2.	Dave Markham	Central Electric Cooperative	WECC	3										
3.	Roman Gillen	Consumer's Power Inc.	WECC	3										
4.	Roger Meader	Coos-Curry Electric Cooperative	WECC	3										
5.	Dave Hagen	Clearwater Electric Cooperative	WECC	3										
6.	Dave Sabala	Douglas Electric Cooperative	WECC	3										
7.	Bryan Case	Fall River Electric Cooperative	WECC	3										
8.	Rick Crinklaw	Lane Electric Cooperative	WECC	3										
9.	Michael Henry	Lincoln Electric Cooperative	WECC	3										
10.	Richard Reynolds	Lost River Electric Cooperative	WECC	3										
11.	Jon Shelby	Northern Lights Electric Cooperative	WECC	3										
12.	Ray Ellis	Okanogan Electric Cooperative	WECC	3										
13.	Aleka Scott	PNGC Power	WECC	4										

Group/Individual		Commenter	Organization		Registered Ballot Body Segment									
					1	2	3	4	5	6	7	8	9	10
14.	Heber Carpenter	Raft River Electric Cooperative	WECC	3										
15.	Ken Dizes	Salmon River Electric Cooperative	WECC	3										
16.	Steve Eldrige	Umatilla Electric Cooperative	WECC	3										
17.	Marc Farmer	West Oregon Electric Cooperative	WECC	3										
18.	Margaret Ryan	PNGC Power	WECC	8										
19.	Stuart Sloan	Consumer's Power Inc.	WECC	1										
20.	Rick Paschal	PNGC Power	WECC	3										
11.	Group	Carol Gerou	MRO's NERC Standards Review Subcommittee											X
	Additional Member	**Additional Organization**	**Region**	**Segment Selection**										
1.	Mahmood Safi	Omaha Public Utility District	MRO	1, 3, 5, 6										
2.	Chuck Lawrence	American Transmission Company	MRO	1										
3.	Tom Webb	Wisconsin Public Service Corporation	MRO	3, 4, 5, 6										
4.	Jodi Jenson	Western Area Power Administration	MRO	1, 6										
5.	Ken Goldsmith	Alliant Energy	MRO	4										
6.	Alice Ireland	Xcel Energy	MRO	1, 3, 5, 6										
7.	Dave Rudolph	Basin Electric Power Cooperative	MRO	1, 3, 5, 6										
8.	Eric Ruskamp	Lincoln Electric System	MRO	1, 3, 5, 6										
9.	Joseph Knight	Great River Energy	MRO	1, 3, 5, 6										
10.	Joe DePoorter	Madison Gas & Electric	MRO	3, 4, 5, 6										
11.	Scott Nickels	Rochester Public Utilties	MRO	4										
12.	Terry Harbour	MidAmerican Energy Company	MRO	1, 3, 5, 6										
13.	Richard Burt	Minnkota Power Cooperative, Inc.	MRO	1, 3, 5, 6										
12.	Group	Daniel Herring	The Detroit Edison Company				X	X	X					
	Additional Member	**Additional Organization**	**Region**	**Segment Selection**										
1.	David A Szulczewski	Engineering	RFC	3, 4, 5										
2.	Steven P Kerkmaz	Engineering	RFC	3, 4, 5										

Group/Individual		Commenter	Organization		Registered Ballot Body Segment									
					1	2	3	4	5	6	7	8	9	10
3.	Nicole M Syc	Engineering	RFC	3, 4, 5										
13.	Group	Albert DiCaprio	ISO/RTO Standards Review Committee			X								
	Additional Member	**Additional Organization**	**Region**	**Segment Selection**										
1.	Terry Bilke	MISO	RFC	2										
2.	Patrick Brown	PJM	RFC	2										
3.	Greg Campoli	ISO-NY	NPCC	2										
4.	Mike Falvo	IESO	NPCC	2										
5.	Matt Goldberg	ISO-NE	NPCC	2										
6.	Kathleen Goodman	ISO-NE	NPCC	2										
7.	Ben Li	IESO	NPCC	2										
8.	Steve Myers	ERCOT	ERCOT	2										
9.	Bill Phillips	MISO	RFC	2										
10.	Mark Thompson	AESO	WECC	2										
11.	Don Weaver	NBSO	NPCC	2										
12.	Mark Westendorf	MISO	RFC	2										
13.	Charles Yeung	SPP	SPP	2										
14.	Group	Sam Ciccone	FirstEnergy		X		X	X	X	X				
	Additional Member	**Additional Organization**	**Region**	**Segment Selection**										
1.	Doug Hohlbaugh	FE	RFC	1, 3, 4, 5, 6										
2.	Jim Kinney	FE	RFC	1										
3.	Brian Orians	FE	RFC	5										
4.	Ken Dresner	FE	RFC	5										
5.	Bill Duge	FE	RFC	5										
6.	Craig Boyle	FE	RFC	1										
7.	Mark Pavlick	FE	RFC	1, 3, 4, 5, 6										
8.	Lenny Lee	FE	RFC	1										
9.	J. Chmura	FE	RFC	1										

Group/Individual		Commenter	Organization	Registered Ballot Body Segment									
				1	2	3	4	5	6	7	8	9	10
10.	Rusty Loy	FE	RFC 5										
11.	Hugh Conley	FE	RFC 1										
12.	Frank Hartley	FE	RFC 1										
15.	Individual	Cynthia S. Bogorad	Transmission Access Policy Study Group	X		X	X	X	X				
16.	Individual	Brandy A. Dunn	Western Area Power Administration	X									
17.	Individual	David Youngblood	Luminant						X				
18.	Individual	Silvia Parada Mitchell	NextEra Energy	X		X		X	X				
19.	Individual	David Youngblood	Luminant					X					
20.	Individual	Jim Eckelkamp	Progress Energy	X		X		X	X				
21.	Individual	Steve Rueckert	Western Electricity Coordinating Council										X
22.	Individual	Janet Smith, Regulatory Affairs Supervisor	Arizona Public Service Company	X		X		X	X				
23.	Individual	Robert W. Kenyon	NERC - EA & I										
24.	Individual	Daniel Duff	Liberty Electric Power LLC					X					
25.	Individual	Russ Schneider	FHEC			X							
26.	Individual	Michelle D'Antuono	Ingleside Cogeneration LP					X					
27.	Individual	Beth Young	Tampa Electric Company	X									

Group/Individual		Commenter	Organization	Registered Ballot Body Segment									
				1	2	3	4	5	6	7	8	9	10
28.	Individual	Joe O'Brien	NIPSCO	X		X		X	X				
29.	Individual	Linda Jacobson	Farmington Electric Utility System			X							
30.	Individual	Greg Rowland	Duke Energy	X		X		X	X				
31.	Individual	Steve Alexanderson	Central Lincoln			X	X					X	
32.	Individual	Bob Thomas	Illinois Municipal Electric Agency				X						
33.	Individual	Joe Petaski	Manitoba Hydro	X		X		X	X				
34.	Individual	Mike Hancock	Shermco Industries										
35.	Individual	Michael Crowley	Dominion Virginia Power	X									
36.	Individual	Edward J Davis	Entergy Services	X		X		X	X				
37.	Individual	Thad Ness	American Electric Power	X		X		X	X				
38.	Individual	Jose H Escamilla	CPS Energy	X									
39.	Individual	Melissa Kurtz	US Army Corps of Engineers	X				X					
40.	Individual	Kenneth A. Goldsmith	Alliant Energy				X						
41.	Individual	Kirit Shah	Ameren	X		X		X	X				
42.	Individual	Rex Roehl	Indeck Energy Services					X					
43.	Individual	Kevin Luke	Georgia Transmission Corporation	X									

Group/Individual		Commenter	Organization	Registered Ballot Body Segment									
				1	2	3	4	5	6	7	8	9	10
44.	Individual	Andrew Z Pusztai	American Transmission Company, LLC	X									
45.	Individual	John Bee	Exelon	X		X		X					
46.	Individual	Glen Sutton	AtCO Electric ltd	X									
47.	Individual	Claudiu Cadar	GDS Associates	X									
48.	Individual	Gerry Schmitt	BGE	X									
49.	Individual	Michael Moltane	ITC	X									
50.	Individual	Bill Middaugh	Tri-State G&T	X									
51.	Individual	Don Schmit	Nebraska Public Power District	X		X		X					
52.	Individual	Michael Falvo	Independent Electricity System Operator		X								
53.	Individual	Martin Kaufman	ExxonMobil Research and Engineering	X				X		X			
54.	Individual	Gary Kruempel	MidAmerican Energy Company	X		X		X					
55.	Individual	Alice Ireland	Xcel Energy	X		X		X	X				

The following balloters submitted comments either with a comment form or with their ballot:

1	Edward P. Cox	AEP Marketing	6
2	Brock Ondayko	AEP Service Corp.	5
3	Kenneth Goldsmith	Alliant Energy Corp. Services, Inc.	4
4	Kirit S. Shah	Ameren Services	1
5	Paul B. Johnson	American Electric Power	1
6	Jason Shaver	American Transmission Company, LLC	1
7	Robert D Smith	Arizona Public Service Co.	1
8	John Bussman	Associated Electric Cooperative, Inc.	1
9	Joseph S. Stonecipher	Beaches Energy Services	1
10	Donald S. Watkins	Bonneville Power Administration	1
11	Francis J. Halpin	Bonneville Power Administration	5
12	William Mitchell Chamberlain	California Energy Commission	9
13	Steve Alexanderson	Central Lincoln PUD	3
14	Matt Culverhouse	City of Bartow, Florida	3
15	Linda R. Jacobson	City of Farmington	3
16	Gregg R Griffin	City of Green Cove Springs	3
17	Paul Morland	Colorado Springs Utilities	1
18	Christopher L de Graffenried	Consolidated Edison Co. of New York	1
19	Peter T Yost	Consolidated Edison Co. of New York	3
20	Wilket (Jack) Ng	Consolidated Edison Co. of New York	5
21	Nickesha P Carrol	Consolidated Edison Co. of New York	6
22	Brenda Powell	Constellation Energy Commodities Group	6
23	Amir Y Hammad	Constellation Power Source Generation, Inc.	5
24	David A. Lapinski	Consumers Energy	3
25	David Frank Ronk	Consumers Energy	4
26	James B Lewis	Consumers Energy	5

27	Kenneth Parker	Entegra Power Group, LLC	5
28	Joel T Plessinger	Entergy	3
29	Terri F Benoit	Entergy Services, Inc.	6
30	Robert Martinko	FirstEnergy Energy Delivery	1
31	Kevin Querry	FirstEnergy Solutions	3
32	Kenneth Dresner	FirstEnergy Solutions	5
33	Mark S Travaglianti	FirstEnergy Solutions	6
34	Dennis Minton	Florida Keys Electric Cooperative Assoc.	1
35	Frank Gaffney	Florida Municipal Power Agency	4
36	David Schumann	Florida Municipal Power Agency	5
37	Richard L. Montgomery	Florida Municipal Power Agency	6
38	Thomas E Washburn	Florida Municipal Power Pool	6
39	Luther E. Fair	Gainesville Regional Utilities	1
40	Claudiu Cadar	GDS Associates, Inc.	1
41	Guy Andrews	Georgia System Operations Corporation	4
42	Gordon Pietsch	Great River Energy	1
43	Gwen Frazier	Gulf Power	3
44	Ronald D. Schellberg	Idaho Power Company	1
45	Bob C. Thomas	Illinois Municipal Electric Agency	4
46	Rex A Roehl	Indeck Energy Services, Inc.	5
47	Michael Moltane	International Transmission Company Holdings Corp	1
48	Garry Baker	JEA	3
49	Stan T. Rzad	Keys Energy Services	1
50	Larry E Watt	Lakeland Electric	1
51	Mace Hunter	Lakeland Electric	3
52	Paul Shipps	Lakeland Electric	6
53	Daniel Duff	Liberty Electric Power LLC	5
54	Brad Jones	Luminant Energy	6
55	Mike Laney	Luminant Generation Company LLC	5
56	Joseph G. DePoorter	Madison Gas and Electric Co.	4

57	Joe D Petaski	Manitoba Hydro	1
58	Greg C. Parent	Manitoba Hydro	3
59	Mark Aikens	Manitoba Hydro	5
60	Daniel Prowse	Manitoba Hydro	6
61	Jason L. Marshall	Midwest ISO, Inc.	2
62	John S Bos	Muscatine Power & Water	3
63	Saurabh Saksena	National Grid	1
64	Arnold J. Schuff	New York Power Authority	1
65	Gerald Mannarino	New York Power Authority	5
66	Guy V. Zito	Northeast Power Coordinating Council, Inc.	10
67	William SeDoris	Northern Indiana Public Service Co.	3
68	Joseph O'Brien	Northern Indiana Public Service Co.	6
69	John Canavan	NorthWestern Energy	1
70	Douglas Hohlbaugh	Ohio Edison Company	4
71	Mark Ringhausen	Old Dominion Electric Coop.	4
72	Margaret Ryan	Pacific Northwest Generating Cooperative	8
73	Sandra L. Shaffer	PacifiCorp	5
74	Tom Bowe	PJM Interconnection, L.L.C.	2
75	John C. Collins	Platte River Power Authority	1
76	Terry L Baker	Platte River Power Authority	3
77	Carol Ballantine	Platte River Power Authority	6
78	David Thorne	Potomac Electric Power Co.	1
79	Jerzy A Slusarz	PSEG Power LLC	5
80	Henry E. LuBean	Public Utility District No. 1 of Douglas County	4
81	Steven Grega	Public Utility District No. 1 of Lewis County	5
82	Greg Lange	Public Utility District No. 2 of Grant County	3
83	Terry L. Blackwell	Santee Cooper	1
84	Lewis P Pierce	Santee Cooper	5
85	Suzanne Ritter	Santee Cooper	6
86	Pawel Krupa	Seattle City Light	1

87	Dana Wheelock	Seattle City Light	3
88	Hao Li	Seattle City Light	4
89	Michael J. Haynes	Seattle City Light	5
90	Dennis Sismaet	Seattle City Light	6
91	Horace Williamson	Southern Company	1
92	William D Shultz	Southern Company Generation	5
93	Scott M. Helyer	Tenaska, Inc.	5
94	Larry Akens	Tennessee Valley Authority	1
95	George T. Ballew	Tennessee Valley Authority	5
96	Marjorie S. Parsons	Tennessee Valley Authority	6
97	Keith V Carman	Tri-State G & T Association, Inc.	1
98	Janelle Marriott	Tri-State G & T Association, Inc.	3
99	Barry Ingold	Tri-State G & T Association, Inc.	5
100	John Tolo	Tucson Electric Power Co.	1
101	Melissa Kurtz	U.S. Army Corps of Engineers	5
102	Martin Bauer P.E.	U.S. Bureau of Reclamation	5
103	Ric Campbell	Utah Public Service Commission	9
104	Louise McCarren	Western Electricity Coordinating Council	10
105	Linda Horn	Wisconsin Electric Power Co.	5
106	James R. Keller	Wisconsin Electric Power Marketing	3
107	Anthony Jankowski	Wisconsin Energy Corp.	4
108	James A Ziebarth	Y-W Electric Association, Inc.	4
109	Kristina M. Loudermilk		8

1. The SDT has restructured the Table for Station DC Supply, separating it into six sub-tables individually addressing the various different technologies. Do you agree that the restructured tables provide more clarity? If not, please provide specific suggestions for improvement.

Summary Consideration: Most commenters seemed to agree in general that the restructured tables added clarity, and some commenters offered assorted suggestions for further improvement. Minor clarifying changes were made to the Tables themselves, and additional discussion was added to the "Supplementary Reference and FAQ" to address various comments.

A number of commenters continued to object to the "3 Calendar Month" maintenance intervals, and the SDT chose not to modify the standard. The activities involved in the 3-calendar-month maintenance intervals all relate to inspection-type activities of unmonitored battery systems and suggestions to extend the maintenance intervals to 6 or 18 months were not adopted.

Some comments suggested extending the interval to 4 months. Additional discussion (including an example) regarding this item was added to Section 7.1 of the "Supplementary Reference and FAQ". As explained in the reference, a calendar month begins on the first day of a new month following the month in which the activity was performed. Thus every "3 Calendar Months" means to add 3 months from the last time the activity was performed.

Specific changes made to the tables in response to comments:

Tables 1-1 and 1-3 – References to Table 2 were corrected.

Table 1-4(a) and Table 1-4(d) – Modified header to clarify, "Protection System Station dc supply"

Table 1-4(b) and Table 1-4(c) - Modified header and component attributes to clarify, "Protection System Station dc supply"

Table 1-4(e) - Modified header and component attributes to clarify, "Protection System Station dc supply" and replaced, "distribution breakers" with "non-BES interrupting devices".

Table 1-4(f) - Modified header to clarify, "Protection System Station dc supply", modified the seventh table entry for clarity, and added eighth table entry.

Table 1-5 – Added "Associated with Protective Functions" to header

Organization	Yes or No	Question 1 Comment
Tri-State G & T Association, Inc.	Ballot	On Table 1-2, page 11: The standard describes the following component attributes, "Any unmonitored

Organization	Yes or No	Question 1 Comment
(3) (5)	Comment – Affirmative	communications system necessary for correct operation of protective functions, and not having all the monitoring attributes of a category below." How does this apply to redundant communication systems? If the primary communications channel fails the protective relay automatically fails over to the back-up channel and continues to function properly. Are redundant communication channels excluded from this component attribute and associated interval? Also, if a relay is set to operate in a manner typical when communication is not used for protection (i.e. defaulting to step-distance functions with a loss of communication), is the defaulted operation of the relay considered "correct operation" thereby excluding the communication as necessary for its correct operation? Please clarify the term correct operation and how it applies to redundant communication systems and/or the performance of the relay in the absence of communication.
Response: Thank you for your comments. If communication-assisted protection is provided as described in the Applicability of PRC-005-2, it must be tested in accordance with the intervals and activities described in the standard. Redundant equipment and/or channels do not relieve the entity of the responsibility to maintain all equipment as required. An entity is entitled to use any monitoring present on the communications system to adjust its maintenance as established within Table 1-2, and, if sufficient component populations are present and the entity wishes to address the additional included requirements, performance-based maintenance is also available. Correct operation of the protective function means that if the communications system is part of the protection system and loss of it causes the system to fail to meet the schemes protection requirements it has failed. In the example you provide, loss of communications would result in time delay clearing depending on location of the fault. If time delay clearing will be sufficient for your system clearing time requirements, then high speed clearing is not required and the Comm. System would not need to be installed. If it is installed, you must meet the PRC-005 requirements. Redundant communications schemes are installed where high speed clearing is required to meet planning criteria. The second scheme is in place to prevent the line from being removed from service if the primary scheme must be maintained or fails. If redundant schemes are in place, both must meet the PRC-005 standard.		
Tri-State G&T		On Table 1-2, page 11: The standard describes the following component attributes, "Any unmonitored communications system necessary for correct operation of protective functions, and not having all the monitoring attributes of a category below." How does this apply to redundant communication systems? If the primary communications channel fails the protective relay automatically fails over to the back-up channel and continues to function properly. Are redundant communication channels excluded from this component attribute and associated interval? Please clarify the term correct operation and how it applies to redundant communication systems.
Response: Thank you for your comments. If communication-assisted protection is provided as described in the Applicability of PRC-005-2, it must be tested in accordance with the intervals and activities described in the standard. Redundant equipment and/or channels do not relieve the entity of the responsibility to maintain all equipment as required. An entity is entitled to use any monitoring present on the communications system to adjust its maintenance as established		

Organization	Yes or No	Question 1 Comment
within Table 1-2, and, if sufficient component populations are present and the entity wishes to address the additional included requirements, performance-based maintenance is also available. Correct operation of the protective function means that if the communications system is part of the protection system and loss of it causes the system to fail to meet the schemes protection requirements it has failed. In the example you provide, loss of communications would result in time delay clearing depending on location of the fault. If time delay clearing will be sufficient for your system clearing time requirements, then high speed clearing is not required and the Comm. System would not need to be installed. If it is installed, you must meet the PRC-005 requirements. Redundant communications schemes are installed where high speed clearing is required to meet planning criteria. The second scheme is in place to prevent the line from being removed from service if the primary scheme must be maintained or fails. If redundant schemes are in place, both must meet the PRC-005 standard.		
Consumers Energy (4)	Ballot Comment - Negative	Relating to Table 1-3, The SDT has advised that the voltage and current inputs must be checked at each individual relay. This may not be difficult if the relays are microprocessor relays (where internal metering may be used), but for the predominant population of electromechanical relays (particularly for current signals), this requirement will necessitate repeated operation of test switches and associated insertion of meters. Such activities will not only be very difficult and time consuming, but will actually be dangerous because of the dangers of accidentally opening current circuits during testing. It should be sufficient to verify the integrity of the series string of protective relays, etc during maintenance activities, as all devices within the series string will be receiving the same values.
Response: Thank you for your comments. Entities can choose how to best manage their risk. If online testing is deemed too risky, offline tests such as, but not limited to, secondary injection, CT excitation test and PT turns ratio tests can be compared to baseline data and be used in conjunction with CT and PT secondary wiring insulation verification tests to adequately “verify the current and voltage circuit inputs from the voltage and current sensing devices to the protective relays”.		
Tri-State G & T Association, Inc. (3) (5)	Ballot Comment - Affirmative	The draft standard requires the PSMP to include maintenance and testing intervals for Station DC supply associated with protective functions (including batteries, battery chargers, and non-battery-based dc supply). Does this requirement include DC systems (batteries not included in station batteries) used by communication systems necessary for the correct operation of protective functions?
Response: Thank you for your comments. No, an independent DC Supply related only to communication equipment is not considered to be “station dc supply”. The periodic functional observation and testing of the communications equipment is included, but there are no requirements for the independent dc supply.		
Wisconsin Electric Power Co. (5) Wisconsin Electric Power	Ballot Comment - Negative	(1) The maximum maintenance intervals listed in various PRC-005-2 tables are described as “calendar years” which is an undefined term. Since maintenance intervals are critical to this standard, this term should be either clearly defined or explained in the standard. For example, if a component was last tested on 6/1/2005; does that component need to be tested by 6/1/2011 or 12/31/2011 to satisfy its 6 calendar year

Organization	Yes or No	Question 1 Comment
Marketing (3) Wisconsin Energy Corp. (4)		maximum maintenance interval? 2) Clarification and/or direction is desired on the testing of protection systems that contain components owned by various entities. For example, in the instance of non-vertical integrated utilities where a distribution provider has a Protection System that directly trips a transmission owner's circuit breaker(s), how would the distribution provider verify that the trip coil is able to operate the circuit breaker? (3) Maximum testing intervals are defined. Does this imply that there are no minimum testing intervals? In other words, is the maintenance cycle reset anytime maintenance is performed? (4) Requirement R1.1.2 states that" "All batteries associated with the station dc supply component type of a Protection System shall be included in a time-based program as described in Table 1-4." Yet, in Table 1-4 under Component Attributes it refers to "…not having monitoring attributes of Table 1-4(f)." Suggest this statement be made more clear by adding "All batteries associated with the station dc supply component type of a Protection System shall be included in a time-based program as described in Table 1-4., unless the dc supply has the monitoring attributes listed in Table 1-4(f)." (5) Suggest the inspection Maximum Maintenance Interval for inspection of batteries be 4 months instead of 3 months to allow for workforce constraints that may preclude an inspection being performed within a 3 month window. Every 3 months has been found to be more than adequate to observe changing conditions that affect batteries, therefore we feel 4 months would still be sufficient. (6) In Tables 1-4 (a), (b), (c) – What is your interpretation of battery continuity? In other words, what measurements or indications would be acceptable to affirm an acceptable condition? Table 1-4(b) VRLA batteries, Maximum Maintenance Interval 18 Calendar Months, Maintenance Activities, Verify: Battery terminal connection resistance, Verify: Battery intercell or unit-to-unit connection resistance - comment: Add the following qualifier to these resistance checks: "If battery posts are not readily accessible or too small to allow a good connection, follow the manufacturer's recommendation(s)."

Response: Thank you for your comments.

1. A "calendar year" refers to the years on the Julian calendar commonly used, and should be regarded as referring to a numbered year, comprising the months of January through December. For example, 2010 is one calendar year; 2011 is another. A component, with a 6-year interval, which was last tested in 2005, would next have to be tested by the end of 2011.

2. The standard does not prescribe "how" an entity must meet the requirements, only that the requirements must be met. However, all entities listed in the Applicability are "owner entities", and the SDT believes that the owner of the component should be responsible for its maintenance. However, it may be necessary to have records relating to specific activities from the associated entity in order to demonstrate compliance to an auditor.

3. No minimum intervals are provided. To the degree that any maintenance includes all required activities, that maintenance can be recorded as addressing the

Organization	Yes or No	Question 1 Comment
standard and re-setting the interval. 4. A "time-based" program includes extended intervals for those activities that can be effectively performed by condition monitoring. However, this requirement excludes an entity from utilizing performance-based maintenance per R3 and Attachment A. 5. The activities involved in the 3-calendar-month maintenance intervals all relate to inspection-type activities. The SDT believes that an entity may schedule activities for a 3-calendar-month interval without a "grace period" if adequate program oversight is exercised, and disagrees that the intervals should be extended. The activities involved in the 3-calendar-month maintenance intervals all relate to inspection-type activities of unmonitored battery systems. See Section 7.1 of the "PRC-005-2 Protection System Maintenance Supplementary Reference & FAQ" for a discussion about "calendar month" 6. In Section 15.4 of "PRC-005-2 Protection System Maintenance Supplementary Reference & FAQ" the SDT gives its interpretation of battery continuity and lists several examples of measurements or indications that would be acceptable to affirm an acceptable condition and contains a discussion of connection resistance. Your comment concerning the inaccessibility of posts or being too small would fit more appropriately as a qualifier there than in the in the standard itself.		
Tennessee Valley Authority (1) (5) (6)	Ballot Comment - Negative	In Table 1-4(a), the requirement to perform battery cell internal ohmic measurements every 18 months for vented lead-acid batteries is excessive, and no technical justification is provided for an 18-month interval. A 3-year internal ohmic test frequency is adequate to prove battery integrity. IEEE 450 does not provide a recommended interval for internal ohmic measurements. For standard capacity testing, the recommended interval is no greater than 25% of expected battery life. Our normal battery life is 20+ years, so the recommended capacity test interval would be about 5 years. EPRI also recommends capacity testing at 5 year intervals. There is no justification for performing internal ohmic measurements every 18 months (which equals every 7.5% interval of the expected battery life). We feel the standard should set the interval for battery internal cell ohmic testing at 3 years.
Response: Thank you for your comments. The Maintenance Activity of evaluating the measured cell/unit internal ohmic values to station battery baseline is an optional activity to verify that the station battery can perform as designed. An owner who desires not to take internal ohmic measurements on a Vented Lead-Acid (VLA) battery can elect to verify that the station battery can perform as designed by conducting a performance, service, or modified performance capacity test of the entire battery bank without ever having to perform any internal ohmic measurement on the battery. The maximum maintenance interval for performing this capacity test on a VLA battery bank is 6 Calendar Years. In section 15.4 of "PRC-005-2 Protection System Maintenance Supplementary Reference & FAQ" - that was posted for review with PRC-005-2 - the SDT answered several Frequently Asked Questions which explain why the 18 month Maximum Maintenance Interval is justified rather than the 3 year frequency that is assumed by some to be adequate.		
Great River Energy (1)	Ballot Comment - Affirmative	1. Table 1-4(b) VRLA Batteries---both" 6 Calendar Months" in the table should be changed to 12 months. This would avoid being in violation if we miss a bank during a "6 month maintenance cycle" 2. Table 1-4(c) Nickel-Cadmium Batteries under the Maintenance Activities column for the 6 Calendar Years--- This maintenance activity should be optional if 18 Calendar Month Activities are completed. Or increase load test to 10 years.

Organization	Yes or No	Question 1 Comment
Response: Thank you for your comments. 1. In the IEEE recommended Practice for Maintenance, Testing and Replacement of VRLA batteries (IEEE SDT 1188) a quarterly inspection should include "Cell/unit internal ohmic values." Based on this recommendation the SDT believes that extending the Maximum Maintenance Interval of 6 Calendar Months in Table 1-4(b) to 12 months as suggested would be too excessive. The 6 Calendar Months for this maintenance activity will allow an entity to avoid being in violation if they miss a bank by a few days during the quarterly maintenance cycle. 2. In section 15.4 of "PRC-005-2 Protection System Maintenance Supplementary Reference & FAQ" the SDT answered a Frequently Asked Question explaining why the 6 Calendar Year maintenance activity cannot be optional if the 18 Calendar Month Activity of Table 1-4(c) is performed. The SDT also in the Supplemental Reference & FAQ document justifies why the 6 Calendar Year Maximum Maintenance interval for performing the Maintenance Activity in Table 1-4(c) can not be extended to 10 years as suggested.		
AtCO Electric ltd		Table 1-4: ATCO Electric has a number of remote substations that are difficult to access. 1. The requirement for a 3 calendar month inspection for electrolyte level is too frequent. The requirement would become achievable if electrolyte level inspections were moved to the 18 calendar months category, or if the 3 calendar months frequency were increased to 8 calendar months. 2. Table 1-4(b): for the same reasons, the requirement of a 6 calendar month inspection of individual battery cell/unit internal ohmic values is too frequent. The requirement would become achievable if battery cell/unit internal ohmic value inspections were moved to the 18 calendar months category, or if the 6 calendar months frequency were increased to 14 calendar months. 3. Table 1-4(c): the requirement of a 6 calendar year performance service or modified performance capacity test should be removed. From our experience, there is no benefit in doing battery load tests. Instead, we apply verification of battery intercell resistance as a more efficient method of monitoring battery condition, which provides an 8 to 14 month lead time to replace a battery unit/cell before it goes dead.
Response: Thank you for your comments. 1. The activities involved in the 3-calendar-month maintenance intervals all relate to inspection-type activities of unmonitored battery systems. The SDT believes that an entity may schedule activities for a 3-calendar-month interval. If adequate program oversight is exercised, and disagrees that the intervals should be extended. See Section 7.1 of the "PRC-005-2 Protection System Maintenance Supplementary Reference & FAQ" for a discussion about "calendar month". 2. In the IEEE recommended Practice for Maintenance, Testing and Replacement of VRLA batteries (IEEE SDT 1188) a quarterly inspection should include "Cell/unit internal ohmic values." Based on this recommendation the SDT believes that extending the Maximum Maintenance Interval of 6 Calendar Months in Table 1-4(b) to the 18 calendar months category as suggested would be excessive and the SDT notes that this verification may be possible via monitoring methods."(See Table 1-4(f), component attribute row "Any lead acid battery based …"). The 6 Calendar Months for this maintenance activity will allow an entity to avoid being in violation if they miss a bank by a few days during the quarterly maintenance cycle.		

Organization	Yes or No	Question 1 Comment
3. In section 15.4 of "PRC-005-2 Protection System Maintenance Supplementary Reference & FAQ" the SDT answered a Frequently Asked Question explaining why the 6 Calendar Year maintenance activity cannot be optional if the 18 Calendar Month Activity of Table 1-4(c) is performed. The SDT also in the Supplemental Reference & FAQ document justifies why the 6 Calendar Year Maximum Maintenance interval for performing the Maintenance Activity in Table 1-4(c) can not be removed as suggested.		
Kristina M. Loudermilk (8)	Ballot Comment - Affirmative	1) In Table 1-4(b) under the Component Attributes, the sentence begins with Station dc supply; while the other 1-4 tables begin with Protection System Station dc. I propose to make it consistent with the other tables. 2) Table 1-4(e) mentions Maximum intervals and references another table. Is there an easier way in the Standard to send the same information without having them flip pages? As another example in every Component Attribute in Table 1-4(f) we mention (See Table 2). Could it be possible to make that a note, instead of placing it under each attribute? It seems overwhelming when looking at these and for each one that is read, flip over to Table 2. I feel like some of these references give the feel of a scavenger hunt. I am not sure if anything can be done, but thought I would mention it.
Response: Thank you for your comments. 1.The Tables have been modified to use "Protection System Station dc supply" 2. In this regard, the SDT has tried several methods of presentation for this information. Of all methods reviewed, including the one you suggest, the SDT has determined that the method currently represented in the Tables represents the best compromise.		
Consumers Energy (4)	Ballot Comment - Negative	Relative to the 18-month activity to measure battery terminal connection resistance in Table 1-4, measuring the battery terminal connection resistance for all terminals of the battery is an involved process that may force the battery (and thus the system) out-of-service, or alternatively the use of a temporary battery, for the duration of the activity. We suggest that a 6-year interval for this involved and invasive activity is appropriate and adequate. We also suggest that it should alternatively be sufficient to instead re-torque all battery terminal connections at the same interval.
Response: Thank you for your comments. In IEEE Standards 450, 1188, and 1106 for vented lead-acid (VLA), valve-regulated lead-acid (VRLA) and nickel-cadmium (NiCd) batteries respectively state that a "yearly inspection" should include "Cell-to-cell and terminal connection resistance", "Cell-to-cell and detail resistance of entire battery", and "Condition and resistance of cable connections." Based on these IEEE recommendations the SDT believes that the Maximum Maintenance Interval of 18 Calendar Months for this Maintenance activity will allow an entity to avoid being in violation if they miss a bank by a few weeks during the yearly maintenance cycle. In section 15.4 of "PRC-005-2 Protection System Maintenance Supplementary Reference & FAQ" - that was posted for review with PRC-005-2 - the SDT explains what hazards can result from high connection resistance. Also in the Supplementary Reference the SDT references where in the IEEE Standards entities can find excellent information and examples of performing this non-intrusive Maintenance Activity. The SDT respectively disagrees with the premise that the activity to		

Organization	Yes or No	Question 1 Comment
measure battery terminal connection resistance in Table 1-4 is "an involved process that may force the battery (and thus the system) out-of-service, or alternatively the use of a temporary battery, for the duration of the activity." Members of the SDT are familiar with numerous Transmission Owners, Generator Owners and Distribution Providers in NERC who yearly perform this benign maintenance activity on their battery systems while the Protection Systems that the station batteries support are in service.		
Ameren Services (1)	Ballot Comment - Affirmative	Clarify p17 Table 1-4(e) interval meaning. We think this means we need to verify the Station dc supply voltage on 12 calendar year interval if unmonitored, or no periodic maintenance if monitored as stated.
Response: Thank you for your comments. You are correct in your interpretation for Protection System dc supply used only for distribution breakers that are associated with UFLS, UVLS, or SPS, as stated in Table 1-4(e).		
Old Dominion Electric Coop. (4)	Ballot Comment - Affirmative	ODEC believes the standard is very close to being ready for approval. 1. In the Attachment A for the battery testing, you exempt the UFLS and UVLS equipment in tables and then include SPS batteries in the table with UFLS and UVLS. Either SPS should be associated with UFLS and UVLS and you need to add it to the previous tables or fix table 1(f). 2. Also, consider going to 4 calendar months instead of 3 calendar months for the battery maintenance requirements.
Response: Thank you for your comments. 1. Special Protection Systems are often a far more complex system which may comprise a combination of "transmission", distribution, and generation components, and are often installed to prevent serious system problems. Therefore, the requirements for SPS equipment maintenance align with that for other generic Protection Systems. It is also notable that the legacy PRC-017-1 includes batteries within the list of components to be addressed. However, if the breaker is a distribution breaker that is associated with SPS but is not otherwise associated with generic Protection Systems, the extended interval in Table 1.4(e) applies. 2. The activities involved in the 3-calendar-month maintenance intervals all relate to inspection-type activities of unmonitored battery systems. The SDT believes that an entity may schedule activities for a 3-calendar-month interval without a "grace period" if adequate program oversight is exercised, and disagrees that the intervals should be extended. See Section 7.1 of the "PRC-005-2 Protection System Maintenance Supplementary Reference & FAQ" for a discussion about "calendar month."		
Associated Electric Cooperative, Inc. (1)	Ballot Comment - Negative	AECI appreciates the effort by the drafting team. However, the 90 day inspections for batteries and communications circuits should be extended to 120 days to allow for a 30 grace period. Schedules would be set for every 90 days as what is required in this revision.
Response: Thank you for your comments. The activities involved in the 3-calendar-month maintenance intervals all relate to inspection-type activities of		

Organization	Yes or No	Question 1 Comment
unmonitored components. The SDT believes that an entity may schedule activities for a 3-calendar-month interval without a "grace period" if adequate program oversight is exercised, and disagrees that the intervals should be extended. See Section 7.1 of the "PRC-005-2 Protection System Maintenance Supplementary Reference & FAQ" for a discussion about "calendar month"		
Manitoba Hydro (1) (3) (5) (6)	Ballot Comment - Negative	1. Battery Check Interval Manitoba Hydro maintains our position that the 3 month battery check interval should be extended to 6 months. The 3 month interval is too frequent based on our experience and while IEEE SDT 450 (which seems to be the basis for table 1-4) does recommend intervals, it also states that users should evaluate these recommendations against their own operating experience. With the 3 month battery check frequency and no allowance for a grace period, there may be a negative impact on reliability caused by diverting resources away from projects that are critical to reliability to meet this maintenance interval. 2. Conductance Measurements Conductance measurement should be listed in Table 1-4 as an acceptable measurement method.
Response: Thank you for your comments. 1. The activities involved in the 3-calendar-month maintenance intervals all relate to inspection-type activities of unmonitored battery systems. The SDT believes that an entity may schedule activities for a 3-calendar-month interval if adequate program oversight is exercised, and disagrees that the intervals should be extended. See Section 7.1 of the "PRC-005-2 Protection System Maintenance Supplementary Reference & FAQ" for a discussion about "calendar month". 2. In section 15.4 of "PRC-005-2 Protection System Maintenance Supplementary Reference & FAQ" the SDT answered a Frequently Asked Question explaining what cell/unit internal ohmic measurements are. Conductance by definition is an ohmic measurement and although not spelled out in the standard is listed in Table 1-4 because it is an ohmic measurement.		
Georgia Transmission Corporation	No	We need clarification on the UFLS or UVLS system Station DC Supply test. We trip the high side device (non-BES asset) for each of our distribution stations UFLS or UVLS schemes, not the individual distribution breakers. It is hard to distinguish what maintenance interval and maintenance activities we should engage for Station DC Supply test. Since the device is not a distribution breaker as mentioned in the Table 1-4 (a-f) we would be conservative and choose to perform maintenance at all our distribution stations with UFLS or UVLS schemes as per Table 1-4(a). Reading the statements in the Supplementary Reference and FAQ, we notice our devices perform similar functions as the distribution breakers. Reference pg 60 of Supp. Ref. and FAQ paragraph 4. Since tripping the high side device of a distribution transformer still constitutes a distributed system would our system meat the exclusion criteria although it is not a distribution breaker, would this meet the same requirements and exempt the station from Table 1-4(a) and require only maintenance for DC systems as per Table 1-4(e)? Please clarify. We recommend changing the term distribution breaker to distribution asset interruption device or non-BES equipment interruption device.

Organization	Yes or No	Question 1 Comment
Response: Thank you for your comments. Table 1-4 (e) has been modified in consideration of your comment to improve clarity ("non-BES interrupting devices "). If the cited distribution transformer is not a BES element, the Protection Systems for that distribution transformer are not included per the Applicability (4.2.1) as modified.		
PNGC Comment Group	No	We agree the changes to the tables have added clarity, but disagree with the maintenance intervals for DC supply. Comments: PNGC's comment group views the Maximum Maintenance Interval for station DC Power Supply (Table - 14a/b/c/d) to be unnecessarily onerous and restrictive to many smaller-rural entities, in the west and probably throughout the US, and this prevents us from being able to support PRC-005-2 as written. We make these comments with the understanding that others have made similar comments in the past but we feel strongly that this is an important issue worthy of further review by the SDT. We believe a quarterly inspection schedule can be met while at the same time allowing entities the flexibility they need. IEEE 1188-2005 suggests a quarterly inspection schedule for lead acid batteries and we believe the standard interval for verifying and inspecting dc supply should be 3 months with a maximum interval of 6 months. This meets the quarterly threshold and gives some flexibility to account for unusual conditions. There are substations in Pacific Northwest rural areas that can be inaccessible during long periods of time during the winter, potentially exposing an entity to sanction if weather conditions prevent access to equipment for an extended period of time. Additionally, due to a smaller workforces and greater distances between equipment subject to PRC-005, small-rural entities face obstacles that large entities may not have. The three month maximum interval assumes ideal conditions and resource access and is not realistic. We thank the SDT for considering our comments.
Response: Thank you for your comments. The activities involved in the 3-calendar-month maintenance intervals all relate to inspection-type activities of unmonitored battery systems. The SDT believes that an entity may schedule activities for a 3-calendar-month interval without a "grace period" if adequate program oversight is exercised, and disagrees that the intervals should be extended.		
Arizona Public Service Company	No	Although considerable clarity was achieved in the structuring of the table for the different types of technologies associated with the DC supply, there is issue on the maximum allowable intervals. The standard remains too prescriptive in the intervals and maintenance activities. As an example it is believed the intent of the interval for verifying voltages and inspecting electrolyte levels and unintentional grounds level would be every 3 months. However, for the entity to ensure compliance and not incur a violation it would have to have a shorter interval, probably every 2 months just to ensure compliance and not incur a violation. The 3 month interval is in question based on programs that have been in service for many years where four months have been proven as reliable for operation, an even shorter period than 3 or 4 months is not only a burden but an unnecessary expense without a benefit of increase reliability of the Bulk Electric System.

Organization	Yes or No	Question 1 Comment
Response: Thank you for your comments. The activities involved in the 3-calendar-month maintenance intervals all relate to inspection-type activities of unmonitored battery systems. The SDT believes that an entity may schedule activities for a 3-calendar-month interval without a "grace period" if adequate program oversight is exercised, and disagrees that the intervals should be extended. See Section 7.1 of the "PRC-005-2 Protection System Maintenance Supplementary Reference & FAQ" for a discussion about "calendar month".		
Southern Company Generation (5)	Ballot Comment - Affirmative	The restructured Table for Station DC supply does clarify what is being required for each type of dc system, yet the Station DC Supply requirements, however, are excessively prescriptive in comparison to the other Protection System component types.
Response: Thank you for your comments. The SDT recognizes that Table 1-4 with its tables a through f is considerably larger than any of the tables for the other four Protection System components. However the SDT does not agree that the maintenance activities of Tables 1-4 (a –f) for the station dc supply are "excessively prescriptive." As pointed out in Section 15.4 of "PRC-005-2 Protection System Maintenance Supplementary Reference & FAQ" the station battery which is part of the station dc supply is unique from any other Protection System component in that it is a perishable product which requires several prescribed maintenance activities to monitor and maintain its ability to perform as designed for its life cycle.		
Indeck Energy Services	No	The tables are limited to a few battery technologies and will be out of date in short order with the many types of advanced batteries already on the market. The testing requirements should be performance based as opposed to prescriptive.
Response: Thank you for your comments. While the SDT agrees that there are a few advanced batteries and new station dc supplies which have non battery based energy storage devices in them on the market, the SDT disagrees that the testing requirements for batteries used in station dc supplies should be performance based as opposed to prescriptive. FERC Order 693 and the approved SAR assign the SDT to develop a standard with maximum allowable intervals and minimum maintenance activities. Please note that the Standard specifically addresses requirements for non-battery based energy storage devices within Table 1-4(d). According to the NERC Reliability Standard Development Process, NERC Reliability Standards must be reviewed at least once every five years, and any changes related to new technologies can be addressed within that process.		
Tampa Electric Company	No	If during a UF operation there were ever any breakers that did not trip properly, there may be enough that do trip to return things to balance. There is more room for error with UFLS than with BES. The standard does make some allowance for differences between UFLS equipment and BES equipment. For example the DC source testing requirement for UFLS is to just test the battery voltage when the control circuit is tested. It is not necessary that the breaker be tripped for UFLS testing every six years as is the case for BES. However, every 12 years all unmonitored control circuitry must be tested, which may include tripping the breaker.
Response: Thank you for your comments. Table 1-5 does not require tripping of the breaker for UFLS/UVLS.		
Tri-State G & T Association, Inc.	Ballot	On Page 19, Table 1-5, the standard requires that electromechanical lockout control circuits be maintained

Organization	Yes or No	Question 1 Comment
(3) (5)	Comment - Affirmative	every 6 years and protective function unmonitored control circuits be maintained every 12 years. Why is there inconsistency in the interval between the electromechanical lockout and protective function control circuits?
Response: Thank you for your comments. The circuit itself is 12-years, but the interval for electromechanical devices such as auxiliary or lockout relays remains at 6 years, as these devices contain “moving parts” which must be periodically exercised to remain reliable.		
Constellation Energy Commodities Group (6)	Ballot Comment - Negative	As with previous revisions of this standard, the maintenance intervals and activities described in Table 1-1 through Table 1-5 are too prescriptive.
Constellation Power Source Generation, Inc. (5)	Ballot Comment - Negative	CPG believes, as with previous revisions of this standard, that the maintenance intervals and activities described in Table 1-1 through Table 1-5 are too prescriptive.
Response: Thank you for your comments. The SDT is not prescribing or suggesting what methods an entity employs within their program. The intervals remain as prescribed within the standard and are designed to be clear and effective to support reliability of the BES.		
Alliant Energy Corp. Services, Inc. (4)	Ballot Comment - Negative	Table 1-5 (Component Type – Control Circuitry) Item 4 – “Unmonitored control circuitry associated with protective functions” require a 12 calendar year maximum maintenance interval. We believe UFLS and UVLS control circuitry should be exempted from this requirement. It would take multiple failures to have any impact, and the impact on the BES would be minimal.
Response: Thank you for your comments. The SDT disagrees; however, the requirements related to interrupting devices used only for UFLS/UVLS are less detailed than those for other Protection Systems because of the reason cited in your comment.		
Consumers Energy (4)	Ballot Comment - Negative	Relative to Table 1-5, the activities will likely require that system components be removed from service to complete those activities. In the case of system elements that do not have redundant protection systems (such as those related to lower-voltage systems within the BES), it may not be possible to do so with outaging customers for the duration of the maintenance activity. The standard must exempt these components from the activities of Table 1-5 if the activity would result in deenergizing customers.
Response: Thank you for your comments. The intervals and activities specified are believed by the SDT to be technically effective. It is left to the entity to determine how to align these requirements with requirements of other regulations and with operational concerns. Entities should be able to complete the activities within the shorter intervals without outages.		
American Transmission	Ballot	1. ATC recognizes the substantial efforts and improvements to PRC-005-2 that have been made and

Organization	Yes or No	Question 1 Comment
Company, LLC (1)	Comment - Negative	appreciate the dedicated work of the SDT. ATC appreciates the removal of Requirement R1.5 and R4 and other clarifications from draft 3. 2. ATC's remaining concerns to PRC-005-2 are with the definition and timelines established in Table 1-5. ATC is recommending a negative ballot since, as written, the testing of "each" trip coil and the proposed maintenance interval for lockout testing will result in the increased amount of time that the BES is in a less intact system configuration. Note: Additional Comments to overall Standard also submitted.
Response: Thank you for your comments. 1. Thank you for your support. 2. The lockout relays and trip coils contain "moving parts" which must be periodically exercised to remain reliable. Operational results, if desired by an entity, MAY be used to meet maintenance requirements to the degree that they verify, etc, the relevant performance. Whether their use is effective for a specific entity is left to the entity to determine.		
Wisconsin Electric Power Co. (5) Wisconsin Electric Power Marketing (3) Wisconsin Energy Corp. (4)	Ballot Comment - Negative	Clarification is required in Table 1-5 as to what trip and control paths should be tested. Specifically, should non-protection paths, such as local control switches, that are not part of the Protection System, but operate Protection System Component, be tested? In Table 1-5, the maintenance activity for unmonitored control circuitry associated with protective functions is to "verify all paths of the control and trip circuits". We recommend that only the protection system paths of the control and trip circuits require verification by PRC-005-2.
Response: Thank you for your comments. The SDT believes that Protection Systems that protect BES elements should be included. This position is consistent with the currently-approved PRC-005-1 and consistent with the SAR for Project 2007-17. The header section of Table 1-5 has been modified to clarify that only the control circuitry associated with protective functions is being addressed.		
Kristina M. Loudermilk (8)	Ballot Comment - Affirmative	In table 1-5 is it necessary to mention the second and last item in the table. If there is nothing to do, then why have it as an attribute making it mandatory to keep track of, well, nothing. If those items do need to stay, then could we reorganize the table so where it is in ascending order from Maximum maintenance intervals, like the other tables?
Response: Thank you for your comments. The SDT believes that inclusion of these two items add clarity. The Table entry for trip coils associated only with UVLS/UVLS has been left in the original position to relate it directly to the companion activities for other applications.		

Organization	Yes or No	Question 1 Comment
Nebraska Public Power District	No	The restructured tables are indeed an improvement; however the tables still need some work for clarity: 1. Table 1-5: Unmonitored control circuitry has a maintenance activity of "Verify all paths of the control and trip circuits." The wording of "control and trip circuits" leads to circuit verification of more than just trip circuits. In fact multiple circuits would have to verified, such as station house load transfer schemes. Providing documentation to an auditor to prove all paths have been tested will be difficult and is considered excessive. The paperwork required to prove compliance is extremely excessive for this requirement and doesn't provide a benefit to reliability. 2. Table 1-5: Table 1-5 requires trip checking every six calendar years for trip coils and electromechanical lockout and/or tripping auxiliary devices. Every six years is excessive, when suitable monitoring is used. We recommend verification of these components be completed at the same frequency as the associated relay testing when monitoring is used. For electromechanical, no more than every 6 calendar years, for microprocessor, no more than 12 calendar years.
Response: Thank you for your comments. 1. The header section of Table 1-5 has been revised to clarify that it applies to "Control Circuitry Associated with Protective Functions", and the SDT believes that this revision addresses your concerns. 2. The electromechanical devices such as auxiliary or lockout relays remains at 6 years, as these devices contain "moving parts" which must be periodically exercised to remain reliable.		
Consolidated Edison Co. of New York (1) (3) (5)	Ballot Comment - Affirmative	1. We recommend increasing the Table 2 reporting window from 24-hours to 72-hours for facilities not continuously manned in order to accommodate discovery and reporting of failed alarms at these facilities which may occur over a long (3-day) holiday weekend.
Consolidated Edison Co. of New York (6)	Ballot Comment - Affirmative	1. We recommend increasing the Table 2 reporting window from 24-hours to 72-hours for facilities not continuously manned in order to accommodate discovery and reporting of failed alarms at these facilities which may occur over a long (3-day) holiday weekend. 2. We recommend that the drafting team recognize that a "fail safe" or "self-reporting" alarm design serves as an acceptable alternative to periodic testing. This "fail safe" or "self-reporting" alarm design is equivalent to continuous testing the alarm. When the alarm circuit fails the alarm is set to "alarm on" and automatically notifies the control center, initiating a corrective action.
Response: Thank you for your comments.		

Organization	Yes or No	Question 1 Comment
1. The SDT believes that the monitoring and reporting will be generally done by automatic reporting methods such as SCADA and previously removed a reference to "automatic reporting" specifically to address those cases where the facility is manned. 2. The application discussed seems to the SDT to be an effective method of "monitoring the monitoring circuit". (See Table 2, last row with heading "Alarm Path with monitoring.")		
Nebraska Public Power District	No	1. Table 2: The interrelationship between Tables 1-1 through 1-5 and Table 2 is ambiguous. Tables 1-1 through 1-5 "component attributes" columns references Table 2 in many cases as the criteria for maximum interval. However, each table entry has a maximum maintenance interval listed as well. There are a few instances where the "trump" interval is not clear. Table 1-5 is a good example. 2. Table 2 states that monitored devices (1-1 through 1-5) not having monitored alarm paths shall be tested every 12 years. However, Table 1-5 states that DC circuits with monitored continuity shall have no periodic maintenance. We suspect that Table 2 attributes needs further clarification to eliminate the confusion, both Table 2 attributes at first glance appear to say the same thing. However, after study it appears to address "detection" monitoring versus continuous (control center type) monitoring. We believe further distinguishing clarifications are needed to make it evident and clear.
Response: Thank you for your comments. 1. The SDT believes that the activities and intervals, as they relate to whatever monitoring attributes are present, are clear. Table 2 is specifically labeled to address whatever maintenance is necessary to the monitoring and alarming equipment itself. The references to Table 2 have been corrected where necessary. 2. Table 1 is related to the component itself, and Table 2 relates to maintenance of the monitoring and alarming if relevant. If the monitoring specified is present, no periodic maintenance of the control circuitry itself is needed. However, as indicated in Table 2, maintenance (or monitoring) is required to assure that the monitoring on the control circuitry is operational.		
ExxonMobil Research and Engineering	No	
Ameren	Yes	Please carry the grid across in Table 1-4(f) to show the Maintenance Activities that go with the Component Attribute.
Response: Thank you for your comments. The grid in Table 1-4(f) is drawn as the SDT intended, to show "No periodic maintenance specified" for all table entries. The activity listed is the activity that is being accomplished by the monitoring mechanism.		
Tennessee Valley Authority	Yes	However, The requirement to perform battery cell internal ohmic measurements every 18 months for vented lead-acid batteries is excessive, and no technical justification is provided for an 18-month interval. A 3-year

Organization	Yes or No	Question 1 Comment
		internal ohmic test frequency is adequate to prove battery integrity. EEE 450 does not provide a recommended interval for internal ohmic measurements. For standard capacity testing, the recommended interval is no greater than 25% of expected battery life. Our normal battery life is 20+ years, so the recommended capacity test interval would be about 5 years. EPRI also recommends capacity testing at 5 year intervals. There is no justification for performing internal ohmic measurements every 18 months (which equals every 7.5% interval of the expected battery life). Recommendation: Set the interval for battery internal cell ohmic testing at 3 years.
Response: Thank you for your comments. The Maintenance Activity of evaluating the measured cell/unit internal ohmic values to station battery baseline is an optional activity to verify that the station battery can perform as designed. An owner who desires not to take internal ohmic measurements on a Vented Lead-Acid (VLA) battery can elect to verify that the station battery can perform as designed by conducting a performance, service, or modified performance capacity test of the entire battery bank without ever having to perform any internal ohmic measurement on the battery. The maximum maintenance interval for performing this capacity test on a VLA battery bank is 6 Calendar Years. In section 15.4 of "PRC-005-2 Protection System Maintenance Supplementary Reference & FAQ" - that was posted for review with PRC-005-2 - the SDT answered several Frequently Asked Questions which explain why the 18 month Maximum Maintenance Interval is justified rather than the 3 year frequency that is assumed by some to be adequate.		
Exelon	Yes	What kind of component we are talking about in table 1.4(d) "Station DC Supply using Non Battery Based Energy Storage" for switchyard in nuclear plants?
Response: Thank you for your comments. An example of a "station dc supply" component of this nature would be fuel cells. The SDT is aware that some entities are beginning to apply non-battery-based dc supplies, but we are unaware whether anyone is using these in switchyards for nuclear plants.		
Xcel Energy	Yes	Regarding the last row of Table 1-4(f): it seems very inconsistent to require a formal trending program for a manual 6 month (VRLA)/18 month (VLA) internal ohmic reading but to require no gathering and analysis of data as an alarm for a ohmic value for each cell/unit is available. If just a raw ohmic value is an adequate predictor of cell life, than why require a trending program for the manual reading if all that is needed to determine adequacy of remaining cell life is just a simple acceptance criteria (i.e. - alarm set point) against which you need to compare your measured data? In theory these are very gradual and predictable changes in ohmic readings over the entire life of the battery, such that the benefit of real time knowledge of exactly when a threshold is reached via alarm is minimal rather than having to wait until the next manual reading to ascertain that the threshold limit has been reached.
Response: Thank you for your comments. Your comment concerning the last row of Table 1-4(f) being inconsistent with the two distinct maintenance activities for internal ohmic value measurement found in the unmonitored station dc supply tables 1-4(a) and 1-4(b) was very incisive. As pointed out in section 15.4 of "PRC-005-2 Protection System Maintenance Supplementary Reference & FAQ" the SDT recognized that there are two maintenance activities in Table 1-4(b) which appear to be the same, but require a different method of interpretation to complete the required maintenance activity. The Drafting Team has considered your comment in light of its own discussion in the Supplementary Reference & FAQ document and has divided the last row of Table 1-4(f) into two rows to reflect the		

Organization	Yes or No	Question 1 Comment
two distinct maintenance activities required in the unmonitored tables (inspection of the condition of individual VRLA cell/units, and evaluating internal ohmic measurements to a baseline to verify the station battery can perform as designed).		
Duke Energy	Yes	We believe the table could be improved further to aid compliance by adding a footnote to the term "baseline" in the sub-tables 1-4(a), 1-4(b) and 1-4(f). The following proposed footnote text is taken from page 65 of the Supplementary and FAQ Reference Document: "Often for older VLRA batteries the owners of the station batteries have not established a baseline at installation. Also for owners of VLA batteries who want to establish a maintenance activity which requires trending of measured ohmic values to a baseline, there was typically no baseline established at installation of the station battery to trend to. To resolve the problem of the unavailability of baseline internal ohmic measurements for the individual cell/unit of a station battery, all manufacturers of internal ohmic measurement devices have established libraries of baseline values for VRLA and VLA batteries using their testing device. Also several of the battery manufacturers have libraries of baselines for their products that can be used to trend to."
Response: Thank you for your comments. The addition that you suggest is properly considered application guidance; the SDT has been advised that such information is not to be included within the standard, and that it is appropriately included in separate reference materials.		
Ingleside Cogeneration LP	Yes	1. Ingleside Cogeneration, LP, continues to believe that the six year requirement to verify channel performance on associated communications equipment will prove to be more detrimental than beneficial on older relays. Clearly newer technology relays which provide read-outs of signal level or data-error rates will easily verified, but the tools which measure power levels and error rates on non-monitored communication links are far more intrusive. After the technician uncouples and re-attaches a fiber optic connection, the communications channel may be left in worse shape after verification than it was prior to the start of the test. 2. However, we have found that the remainder of the items in the Tables are logically organized and correspond effectively with the five components of a Protection System. The maintenance activities and intervals are technically solid and reasonable. In our opinion, the benefits to proceed outweigh our one concern with the validation of communications channel performance.
Response: Thank you for your comments. 1. We agree that it is not good practice to disturb fiber connections as you indicate. Draft 4 does not require that. The Entity must perform the activities in the "Maintenance Activities" column. The SDT does not interpret this as taking anything apart. 2. Thank you.		
Manitoba Hydro	Yes	The restructured tables are an improvement, but we suggest that conductance (siemens) should be listed as

Organization	Yes or No	Question 1 Comment
		an acceptable measurement in addition to the resistance measurements already included in the tables.
Response: Thank you for your comments. In section 15.4 of "PRC-005-2 Protection System Maintenance Supplementary Reference & FAQ" the SDT answered a Frequently Asked Question explaining what cell/unit internal ohmic measurements are. Conductance is an ohmic measurement and although not spelled out in the standard is listed in Table 1-4 because it is an ohmic measurement.		
NIPSCO	Yes	Sub-tables are good. A related question: Some devices such as reclosers and circuit breakers may include batteries within the device itself. Does Table 1-4 apply to such batteries and DC supply? Recloser batteries do not provide access to intercell connections.
Response: Thank you for your comments. In most instances Table 1-4 does not apply to recloser batteries or batteries within the device because they are not generally used to provide dc power to Protection Systems designed to provide protection for BES elements. However, these types of devices with self contained batteries may be used at the distribution level to provide Protection Systems used for underfrequency and undervoltage load-shedding. Maintenance activities and maximum maintenance intervals for such batteries are found in Table 1-4(e) of the Standard.		
MISO Standards Collaborators American Transmission Company, LLC	Yes	1. Yes, however, in the "Supplemental reference and FAQ" document on page 65 there are two areas of concern. Page 65, paragraph 4:" the type of test equipment used to establish the baseline must be used for any future trending of the cells internal ohmic measurements because of variances in test equipment and the type of ohmic measurement used by different manufacturer's equipment." While we understand the importance of creating a baseline, it is not feasible to expect the test equipment be the same as the manufacturer's test equipment or even the same test equipment over the life of the battery. The expected life of a battery may be in excess of 20 years and it is not feasible to expect that the type of equipment will not change during this period. 2. On Page 65, paragraph 6, it states:"all manufacturers of internal ohmic measurement devices have established libraries of baseline values." We question the availability of baseline libraries for all manufacturers considering the variety and longevity of installations.
Response: Thank you for your comments. 1. The "Supplementary Reference and FAQ" concerning types of equipment have been changed per your suggestion to reflect consistent test data as opposed to exactly the same piece of test equipment. 2. Many manufacturers of "Ohmic" test equipment have established libraries of baseline data. You are correct that test equipment manufacturers may not have data on every battery in service today. Several manufacturers of batteries (not all) have libraries for some (but perhaps not all) of their products. To achieve significant results from a trending program one needs to have good baseline data. The "Supplementary Reference and FAQ" document has been revised to reflect your concern – the word, "all" was changed to "many".		

Organization	Yes or No	Question 1 Comment
MRO's NERC Standards Review Subcommittee	Yes	Yes, however, in the "Supplemental reference and FAQ" document on page 65 this is one area of concern. Page 65, paragraph 4 "the type of test equipment used to establish the baseline must be used for any future trending of the cells internal ohmic measurements because of variances in test equipment and the type of ohmic measurement used by different manufacturer's equipment" While we understand the importance of creating a baseline, it's not feasible to expect the test equipment to be the same as the manufacturer's test equipment or even the same test equipment over the life of the battery. The expected life of a battery may be in excess of 15 years and it is not feasible to expect that the type of test equipment will not change during this period. We suggest changing the wording to read that consistent test equipment should be used to provide consistent/comparable results.
Response: Thank you for your comments. The statements concerning types of equipment have been changed per your suggestion to reflect consistent test data as opposed to exactly the same piece of test equipment.		
The Detroit Edison Company	Yes	Yes, the tables do provide more clarity. It is much easier to understand the requirements now that they are broken down by technology, and the exclusion of intervals on certain activities based on the individual monitoring attributes is helpful. I appreciate the thought that went into revising this.
Response: Thank you for your comments.		
New York Power Authority (1)	Yes	No comments.
ITC	Yes	The re-structured tables are easier to use.
Response: Thank you for your comments.		
Luminant	Yes	No comments.
BGE	Yes	No comments.
Luminant	Yes	No comments
Northeast Power Coordinating Council	Yes	

Organization	Yes or No	Question 1 Comment
Electric Market Policy	Yes	
Santee Cooper	Yes	
Bonneville Power Administration	Yes	
SPP reliability standard development Team	Yes	
Pepco Holdings Inc	Yes	
Imperial Irrigation District	Yes	
FirstEnergy	Yes	
Western Area Power Administration	Yes	
NextEra Energy	Yes	
Liberty Electric Power LLC	Yes	
FHEC	Yes	
Farmington Electric Utility System	Yes	
Central Lincoln	Yes	
Illinois Municipal Electric Agency	Yes	
Shermco Industries	Yes	
Dominion Virginia Power	Yes	

Organization	Yes or No	Question 1 Comment
American Electric Power	Yes	
CPS Energy	Yes	
US Army Corps of Engineers	Yes	
Alliant Energy	Yes	
GDS Associates	Yes	
Independent Electricity System Operator	Yes	
MidAmerican Energy Company	Yes	

2. The SDT has modified the Implementation Periods within the Implementation Plan. Do you agree with the changes? If not, please provide specific suggestions for improvement.

Summary Consideration: Most commenters who responded to this question agreed with the proposed Implementation Plan. There was no predominant theme in the comments. A few commenters focused on the perceived short time period allowed for the initial conversion and development of their maintenance program while and other commenters suggested specifying Jan. 1 as an interval marker to ease in calendar year interval determination.

The SDT believes that the time frames in the proposed Implementation Plan are adequate for conversion when considering the complete time frame that is likely to occur between industry approval vote and regulatory approvals.

The Implementation Plan was modified to provide for a lengthened implementation period for R1 and the less-than-1-calendar-year activities in R2 and R3 to allow entities not subject to regulatory approvals of 9 additional months following BOT approvals, and, for the remaining activities, of 12 additional months following BOT approvals, to be more consistent with the expected Regulatory Approval timelines. Additionally, all "calendar year" implementation periods were revised to "months" for additional clarity.

The team also clarified that during the phase-in of the requirements in PRC-005-2, entities must be prepared to identify whether each component is being maintained according to PRC-005-2, or according to PRC-005-1, PRC-008-0, PRC-011-0, and PRC-017-0.

Under Item 4a, the team corrected the reference to generating plant outages to change "two years" to "three years" to align with the time allocated for becoming 30% compliant (3 years) with maintenance of components subject to a 6 year interval.

Organization	Yes or No	Question 2 Comment
Tri-State G&T		The draft standard requires the PSMP to include maintenance and testing intervals for Station DC supply associated with protective functions (including batteries, battery chargers, and non-battery-based dc supply). Does this requirement include DC systems (batteries not included in station batteries) used by communication systems necessary for the correct operation of protective functions?
Response: Thank you for your comments. This comment does not apply to the Implementation Plan.		
Consumers Energy (4)	Ballot Comment - Negative	The implementation period for R1 and R3 for the component types addressed in Tables 1-3 and 1-5 is not adequate. The requirements may cause entities to identify components very differently than they are currently doing, and doing so may take several years to complete. The Implementation Plan for R1 and R3 is too aggressive in that it may not permit entities to complete the identification of discrete components and the associated maintenance and implement their program as currently proposed. We propose that the Implementation Plan specifically address the components in Table 1-3 and 1-5 with a minimum of 3 calendar

Organization	Yes or No	Question 2 Comment
		years for R1 and 12 calendar years after that for R4.
Response: Thank you for your comments. The SDT believes that the degree of flexibility written in the standard for categorizing (and subcategorizing) is sufficient for accomplishing the requirements within the time frames given in the Implementation Plan. For example, the voltage and current sensing devices may be individually identified or identified by group (associated with a relay). Examples of different ways to group the dc control circuitry discrete components include individual circuits, individual lockout devices, component protected, by control panel, or by station. The method chosen for the representation will impact the amount of time required to transform a maintenance program.		
Ameren Services (1)	Ballot Comment - Affirmative	PSMP Implement Date should commence at the beginning of a Calendar year (i.e., January 1st). This is the most practical way to transition assets from our existing PRC-005-1 plans
Response: Thank you for your comments. The SDT believes that the proposed Implementation Plan intervals are long enough to provide an entity the amount of time it will take to transition to the new intervals. Considering the additional time between an approved ballot by the industry through the NERC BOT approval and regulatory agency approval, it is very likely that an entity may have an additional 6-9 months to transition to the new program. The guidance provided to drafting teams by NERC suggests that standards should be effective at the beginning of a calendar quarter, rather than a calendar year.		
Independent Electricity System Operator	No	We commented on this before and we will comment again. The time periods for FERC-jurisdictional entities and non-jurisdictional entities should have at least a 3-month difference to allow some time for FERC approval after BoT adoption in an attempt to more or less put the effective dates of the two groups of entities in the same general time frame. The implementation plan as presented will always result in an effective date for the non-jurisdictional entities to be at least some months (the time between BoT adoption and FERC approval) earlier than their jurisdictional counterparts.
Response: Thank you for your comments. The Implementation Plan was modified to provide for a lengthened implementation period for R1 and the less-than-1-calendar-year activities in R2 and R3 to allow entities not subject to regulatory approvals of 9 additional months following BOT approvals, and, for the remaining activities, of 12 additional months following BOT approvals, to be more consistent with the expected Regulatory Approval timelines.		
NIPSCO	No	This new standard's calibration intervals outlined here will require additional staff at our organization. In order to get people hired and trained the implementation plan should allow more time for the phase-in period. From experience, calibration should have been de-emphasized since more concerns are discovered during full tests.
Response: Thank you for your comments. The SDT believes that the proposed Implementation Plan intervals are long enough to provide an entity the amount of time it will take to transition to the new intervals. Considering the additional time between an approved ballot by the industry through the NERC BOT approval and regulatory agency approval, it is very likely that an entity may have an additional 6-9 months to transition to the new program.		

Organization	Yes or No	Question 2 Comment
Tampa Electric Company	No	The new maintenance plan has to be completed in 1 year. 1. Would that mean it is required to identify and list every element that requires testing in a database within the first year? This will be a time intensive effort that probably that would be difficult to complete in a year with current personnel. 2. After 1 year, would entities be required to start implementing the plan depending on the maintenance intervals of the equipment? Qualified people would have to be in place to start the work, again this would be difficult to accomplish with current personnel.
Response: Thank you for your comments. 1. No. Please read R1 carefully to determine what's necessary to be implemented. There is no requirement to have a database – just to have a PSMP that identifies the component "types" and for each component type, the associated type of maintenance program, associated maintenance activities, maintenance intervals, and, for component types that use monitoring to extend the intervals, the appropriate monitoring attributes. There is no requirement to identify and list every element. 2. Yes. The implementation of the plan must proceed as indicated.		
Indeck Energy Services	No	The last part of the implementation plan is vague, if not undefined. The implementation should "follow the previous maintenance intervals until all maintenance is transitioned to the new intervals."
Response: Thank you for your comments. The SDT presumes that your comment is related to the last paragraph of the General Consideration section of the proposed Implementation Plan. The entity should follow the previous maintenance intervals for any specific components until that component is addressed by PRC-005-2. As the transition is occurring, the entity should adjust its maintenance and testing schedule so that it is able to demonstrate that the required % of components meet the maintenance intervals given in the PRC-005-2 tables at each of the % compliant milestones given in this Implementation Plan.		
American Electric Power	No	On page 2 of the implementation plan, it is indicated that PRC-005-1, PRC-008-0, PRC-011-0 and PRC-017-0 shall be retired and that entities will be required to identify which components will be addressed under PRC-005-1 or PRC-005-2. There is no wording to cover those components that are still being addressed under PRC-008-0, PRC-011-0 or PRC-017-0 during the implementation period.
Response: Thank you for your comments. As noted in the "General Considerations", the entity should follow the previous maintenance intervals for any specific components until that component is addressed by PRC-005-2. As the transition is occurring, the entity should adjust its maintenance and testing schedule so that they are able to demonstrate that the required % of components meet the maintenance intervals given in the PRC-005-2 tables at each of the % compliant milestones given in this Implementation Plan. The team also clarified that during the phase-in of the requirements in PRC-005-2, entities must be prepared to identify whether each component is being maintained according to PRC-005-2 or according to PRC-005-1, PRC-008-0, PRC-011-0, or PRC-017-0.		

Organization	Yes or No	Question 2 Comment
Bonneville Power Administration	No	Many of the maintenance intervals in the standard are given in the terms calendar years or calendar months. There is no description of these terms in the NERC Glossary. My Webster's dictionary defines calendar year as the period that begins on January 1 and ends on December 31. There is no definition in my dictionary of calendar month. Is the intent of the term calendar year in the standard that maintenance intervals start on January 1 and end on December 31? This would make all maintenance due on December 31, and December would be a very busy time. Does this mean that if I do maintenance on something with a maximum interval of six calendar years in June of 2011 that it will be due again on January 1 of 2017 instead of June 1 of 2017? We believe that the drafting team intends for maintenance to be due after a given number of years that begins to elapse immediately after the previous maintenance is completed so that in the previous example the maintenance would be due on June 1, 2017. Please remove the word calendar from the maximum maintenance intervals to remove this confusion.
Response: Thank you for your comments. The intent of the term calendar year is to indicate that the maintenance is due sometime during a particular calendar year (Jan-Dec). If you perform maintenance in June 2011 and have a 6 calendar year interval, then the same maintenance is again due sometime in 2017 (2011 + 6). The NERC Compliance Application Notice CAN-0010, posted 19 Apr 2011, supports this compliance guideline. An interval of one calendar year means that the activity or event must be conducted at least once within each calendar year.		
FHEC	No	Can't locate the implementation plan in the posted materials.
Response: Thank you for your comments. The implementation plan was provided as a separate document within the posting and is available in the Standards Under Development section of the NERC website under Project 2007-17: http://www.nerc.com/filez/standards/Protection_System_Maintenance_Project_2007-17.html		
FirstEnergy	No	Although we agree with the timeframes being afforded to achieve compliance, we suggest the following changes: 1. During the last comment period, we suggested changes to the wording regarding retirement of existing standards on page 2. We do no see a response to these comments. Therefore, we would like to reiterate that the four existing standards are to be retired upon the effective date of the new standard and not upon regulatory approval. 2. In 4a of the plan, since the timeframe for 30% completion is 3 calendar years, we suggest a change to three calendar years for the parenthetical phrase “(or, for generating plants with scheduled outage intervals exceeding two calendar years, at the conclusion of the first succeeding maintenance outage)”. Change ”two” to “three” 3. We suggest the implementation plan be included within the body of the standard. It is very burdensome for

Organization	Yes or No	Question 2 Comment
		entities to have to look for the implementation plan and we believe that a "one-stop shopping" approach would alleviate this burden.
Response: Thank you for your comments. 1. The Effective Date within the Standard was stated as it is based on verbal advice of NERC Compliance – several drafts ago. 2. The Implementation Plan has been modified as you suggested. 3. The Implementation Plan is provided separately in accordance with instructions from the NERC Standards Department and Standards Committee. Further, at the end of all transition periods, it is not needed in the standard.		
ExxonMobil Research and Engineering	No	
Ameren	Yes	While we agree with the Implementation Periods, it would be best to alter R2 and R3 implementation such that components with maximum allowable intervals of 1 year or longer align with a true calendar year (i.e. begin with January 1).
Response: Thank you for your comments. The SDT believes that the proposed Implementation Plan intervals are long enough to provide an entity the amount of time it will take to transition to the new intervals. Considering the additional time between an approved ballot by the industry through the NERC BOT approval and regulatory agency approval, it is very likely that an entity may have an additional 6-9 months to transition to the new program. The guidance provided to drafting teams by NERC suggests that standards should be effective at the beginning of a calendar quarter, rather than a calendar year.		
MidAmerican Energy Company	Yes	1. In the background section of the implementation plan in item two it states "...it is unrealistic for those entities to be immediately in compliance with the new intervals." Recent compliance application notices indicate that auditors are requiring entities to include proof of compliance to maintenance intervals by providing the most recent and prior maintenance dates. The implementation document could be improved by providing clarity to what is expected with regard to when an entity is expected to provide evidence of maintenance interval compliance given the quoted item above. As an example in the section the implementation plan for a 6 year interval item it states: "The entity shall be at least 30% compliant on the first day of the first calendar quarter 3 years following applicable regulatory approval.." In keeping with the previously quoted "reasonableness" criteria it would seem that 30% compliant would mean only one test action would be needed to be completed by the indicated deadline and the next one would be required no later than 6 years from that first test. It is recommended that the implementation plan document be improved to clarify this issue. 2. In addition, it would seem appropriate to allow entities that decide to implement PRC-005-2 requirements

Organization	Yes or No	Question 2 Comment
		before the standard becomes effective to count the maintenance they do before the effective date in the implementation plan schedule and in the testing interval compliance.
Response: Thank you for your comments. 1. The Implementation Plan establishes that an entity must follow its current plan until the new standard is implemented for any specific component. Therefore, an entity should have documentation that it has maintained any given component according to its current program until it is addressed in the revised program (including all relevant activities addressed in PRC-005-2). An entity should adjust it's maintenance and testing schedule so that it is able to demonstrate that the required % of components meet the maintenance intervals given in the PRC-005-2 tables at each of the % compliant milestones given in the Implementation Plan. The team also clarified that during the phase-in of the requirements in PRC-005-2, entities must be prepared to identify whether each component is being maintained according to PRC-005-2 or according to PRC-005-1, PRC-008-0, PRC-011-0, or PRC-017-0. 2. If entities begin to implement the PRC-005-2 activities before the effective date, it seems to the SDT that this entity will find that they it has fully implemented PRC-005-2 sooner, and will thus have attained a stable sustainable program that much sooner.		
New York Power Authority (1)	Ballot Comment - Affirmative	2. The SDT has modified the Implementation Periods within the Implementation Plan.. Do you agree with the changes? If not, please provide specific suggestions for improvement. X0 Yes 0 No Comments:
Luminant	Yes	No comments.
BGE	Yes	No comments.
Luminant	Yes	No comments
Northeast Power Coordinating Council	Yes	
MISO Standards Collaborators	Yes	
Electric Market Policy	Yes	
Santee Cooper	Yes	

Organization	Yes or No	Question 2 Comment
SPP reliability standard development Team	Yes	
Pepco Holdings Inc	Yes	
Tennessee Valley Authority	Yes	
Imperial Irrigation District	Yes	
PNGC Comment Group	Yes	
MRO's NERC Standards Review Subcommittee	Yes	
The Detroit Edison Company	Yes	
Western Area Power Administration	Yes	
NextEra Energy	Yes	
Arizona Public Service Company	Yes	
Liberty Electric Power LLC	Yes	
Ingleside Cogeneration LP	Yes	
Farmington Electric Utility System	Yes	
Duke Energy	Yes	
Central Lincoln	Yes	
Illinois Municipal Electric Agency	Yes	

Organization	Yes or No	Question 2 Comment
Manitoba Hydro	Yes	
Shermco Industries	Yes	
Dominion Virginia Power	Yes	
CPS Energy	Yes	
US Army Corps of Engineers	Yes	
Alliant Energy	Yes	
Georgia Transmission Corporation	Yes	
American Transmission Company, LLC	Yes	
GDS Associates	Yes	
ITC	Yes	
Xcel Energy	Yes	

3. The SDT has modified the VSLs, VRFs and Time Horizons with this posting. Do you agree with the changes? If not, please provide specific suggestions for improvement.

Summary Consideration: Many commenters pointed out an error (which was corrected by the SDT) within the VSL for R2, where the Lower and High VSLs contained identical text.

Many comments were offered on the VRFs that demonstrated unfamiliarity with the relationship between VSLs and VRFs. Violation Risk Factors identify the reliability-related risk associated with non-compliance; VSLs are applied after a finding of non-compliance to identify the degree of non-compliance.

Many duplicate comments were offered on the content of the standard which were not relevant to the VRFs, VSLs, or Time Horizons and these were answered elsewhere in this document

VSLs for R1:

- Phased VSLs were added to address R1 Part 1.1, which was previously addressed only as a "Severe" VSL.
- A reference was added within the R1 VSL to Part 1.3.
- R1 High VSL was revised to add a reference to Table 2.

VSLs for R2:

- One element of the R2 VSL was made binary (Severe), rather than "phased" (in two steps), in response to several comments.

VSLs for R3:

- The R3 VSLs were revised to replace "complete" with "implement and follow" for consistency with the Requirement.

Other minor editorial changes were made throughout the VSLs in response to comments.

Organization	Yes or No	Question 3 Comment
Tri-State G&T		On Page 19, Table 1-5, the standard requires that monitored electromechanical lockouts be maintained every 6 years. Why is there inconsistency in the interval between the monitored lockouts and monitored relays?
Response: Thank you for your comments. These comments are not relative to the non-binding poll of the VRFs and VSLs for PRC-005. Please see our response to your comments on the standard provided elsewhere in this report.		

Organization	Yes or No	Question 3 Comment
SPP reliability standard development Team	No	1. If the maintenance is done prior to the maximum interval would it then reset the clock. Or should it read that maintenance and testing should be done at least once per quarter etc. 2. We would like to see the plan split up into generation time horizons and transmission time horizons, these can be significantly different.
Response: Thank you for your comments. 1. Provided that all required maintenance activities are done, the activity for that interval is taken care of, and the clock is reset. 2. The options for the Time Horizons are "Long-term Planning" (a planning horizon of one year or longer), "Operations Planning" (operating and resource plans from day-ahead up to and including seasonal), "Same Day Operations" (actions required within the timeframe of a day, but not real-time), "Real-time Operations" (actions required within one hour or less to preserve the reliability of the bulk electric system), and "Operations Assessment" (follow-up evaluations and reporting of real time operations). All of the requirements are properly assigned a Time Horizon of "Long Term Planning". There is no provision for different Time Horizon between entity types.		
Indeck Energy Services	No	1. The VSL's for R1 should combine the ones for Lower, Moderate and High VSL into Lower VSL. The Severe VSL should be moved to the Moderate VSL. Because R1 is administrative, it shouldn't have High or Severe VSL's. 2. The R2 High VSL (3 yrs) is more stringent than the Severe VSL (5 yrs). 3. The R3 VSL's need to have combined numbers of components or percentages because small generators may only have 25 relays or 1 battery and would be categorized as High or Severe VSL with a few components affected. The percentage could apply to RE's with more than 250 components included in the PSMP. 4. The Medium VRF for R1 should be Low VRF because R1 is administrative. Only the performance of the maintenance has anything more than Low VRF. 5. The Medium VRF for R2 is OK. 6. Having a High VRF for R3 is without basis. R3 should have Medium VRF.
Response: Thank you for your comments. 1. R1 is not administrative – it is foundational to developing the program. The VSLs as established conform to the NERC Violation Severity Level Guidelines. 2. The SDT disagrees. R2 "High" reflects a failure to return the "Countable Events" to an acceptable level in three years. R2 "Severe" reflects even worse performance, in that the entity has failed to return the "Countable Events" to an acceptable level in an even longer period – five years.		

Organization	Yes or No	Question 3 Comment
3. The SDT disagrees. A smaller entity will have less to maintain in accordance with the standard, and thus the percentages are still appropriate. 4. R1 is not administrative – it is foundational to developing the program, and not having a program could "directly and adversely affect the electrical state or capability of the bulk electric system, or the ability to effectively monitor, control, or restore the bulk electric system" as established in the criteria for a Medium VRF, even if the devices are being maintained to some degree. Without having an established program, the remaining requirements are far less meaningful. 5. Thank you. 6. The SDT believes that failure to maintain Protection Systems could "place the bulk electric system at an unacceptable risk of instability, separation, or cascading failures" as established in the criteria for a High VRF. This concern is borne out by observations relating to several disturbances over the last several years. Also, a High VRF for R3 is consistent with the PRC-005-1 VRF for the corresponding requirement (R2).		
FRCC (10)	Non-binding Poll Comment	The VSL's need additional work. Here are some of the issues I see: 1. For R1, the High VSL has a condition that states "Failed to include all maintenance activities or intervals relevant for the identified monitoring attributes specified in Tables 1-1 through 1-5. (Part 1.4)" This condition is really a combination of what is required in Part 1.3 AND Part 1.4. How would the compliance enforcement determine an appropriate VSL if the registered entity only did not do Part 1.3 (maintenance activities)? These should be separated. 2. Also the Severe VSL is also identified for failure to specify three or more component types. I believe it is more appropriate to have three in High VSL and leave the Severe VSL for 4 or more. 3. For R2, the Lower VSL lists item 1) as "Failed to reduce countable events to less than 4% within three years." This is also the same condition that is identified for the High VSL. It is also the same condition that is listed as item 2) for the Severe VSL. In Lower and Severe, the items are separated by OR so they are each distinct. So, which VSL should the compliance enforcement authority use? 4. Also for R2, Lower VSL is indicated for failure to document for countable events for 5% or less of components. Then you jump to Severe VSL for over 5%. That seems like a very huge jump. The Moderate and High VSLs should be used to make a more gradual difference. 5. Finally, for R2, the Lower VSL is indicated if a segment has 54-59 components and a Severe is more than 54 components. In reading Attachment A, it states that a segment MUST contain at least sixty (60) individual components. This would appear to me to be all or nothing. I would suggest that the only VSL for this would be a Severe if it did not have 60 or more.
Response: Thank you for your comments.		

Organization	Yes or No	Question 3 Comment
1. The SDT disagrees. For the assessment of compliance to R1, Part 1.3 and Part 1.4 work together in the fashion identified in the VSL. 2. The SDT disagrees, and believes that failure to address three or more component types (out of a total of five) indeed reflects a Severe violation of the requirement. 3. Thank you for catching this. The High VSL has been modified from three years to four years. Where elements of the VSL are separated by "or", the compliance enforcement authority should use each of them as appropriate. 4. The SDT disagrees. The documentation of countable events is so fundamental to a performance-based maintenance program that the SDT has assigned a Lower VSL to minor transgressions, with all other transgressions being regarded as a Severe VSL. 5. The SDT has modified the R2 VSL for the segment population to be binary as you suggested.		
Tri-State G & T Association, Inc. (3) (5)	Ballot Comment	1. On Page 7, R2 Violation Severity Levels, "Entity has Protection System elements in a performance-based PSMP but has failed to reduce countable events to less than 4% within three years" is shown as both a Lower VSL and a High VSL. What differentiates the two VSLs? 2. R1 VSL - Second item in Severe VSL is not addressed in any lower VSL. Should there also be a comparable violation in Lower and Moderate?
Response: Thank you for your comments. 1. Thank you for catching this. The High VSL has been modified from three years to four years. 2. VSLs have been added to Moderate and High to address lesser violations.		
Tri-State G & T Association Inc. (3)	Non-binding Poll Comment	1. Comment 1: On Page 7, R2 Violation Severity Levels, "Entity has Protection System elements in a performance-based PSMP but has failed to reduce countable events to less than 4% within three years" is shown as both a Lower VSL and a High VSL. What differentiates the two VSLs? 2. Comment 2: R1 VSL - Second item in Severe VSL is not addressed in any lower VSL. Should there also be a comparable violation in Lower and Moderate?
Response: Thank you for your comments. 1. Thank you for catching this. The High VSL has been modified from three years to four years. 2. VSLs have been added to Moderate and High to address lesser violations.		
Tri-State G & T Association Inc. (5)	Non-binding Poll	1: On Table 1-2, page 11: The standard describes the following component attributes, "Any unmonitored communications system necessary for correct operation of protective functions, and

Organization	Yes or No	Question 3 Comment
	Comment	not having all the monitoring attributes of a category below." How does this apply to redundant communication systems? If the primary communications channel fails the protective relay automatically fails over to the back-up channel and continues to function properly. Are redundant communication channels excluded from this component attribute and associated interval? Also, if a relay is set to operate in a manner typical when communication is not used for protection (i.e. defaulting to step-distance functions with a loss of communication), is the defaulted operation of the relay considered "correct operation" thereby excluding the communication as necessary for its correct operation? Please clarify the term correct operation and how it applies to redundant communication systems and/or the performance of the relay in the absence of communication. 2: The draft standard requires the PSMP to include maintenance and testing intervals for Station DC supply associated with protective functions (including batteries, battery chargers, and non-battery-based dc supply). Does this requirement include DC systems (batteries not included in station batteries) used by communication systems necessary for the correct operation of protective functions? 3: On Page 19, Table 1-5, the standard requires that electromechanical lockout control circuits be maintained every 6 years and protective function unmonitored control circuits be maintained every 12 years. Why is there inconsistency in the interval between the electromechanical lockout and protective function control circuits? 4: On Page 7, R2 Violation Severity Levels, "Entity has Protection System elements in a performance-based PSMP but has failed to reduce countable events to less than 4% within three years" is shown as both a Lower VSL and a High VSL. What differentiates the two VSLs?
Response: Thank you for your comments. 1. These comments are not relative to the non-binding poll of the VRFs and VSLs for PRC-005. Please see our response to your comments on the standard provided elsewhere in this report. 2. These comments are not relative to the non-binding poll of the VRFs and VSLs for PRC-005. Please see our response to your comments on the standard provided elsewhere in this report. 3. These comments are not relative to the non-binding poll of the VRFs and VSLs for PRC-005. Please see our response to your comments on the standard provided elsewhere in this report. 4. Thank you for catching this. The High VSL has been modified from three years to four years.		
Farmington Electric Utility System	No	VSL on R2: Lower criteria item 1; the wording is identical High VSL. FEUS recommends keeping the criteria in the Lower VSL.

Organization	Yes or No	Question 3 Comment
City of Farmington (3)		
Response: Thank you for your comments. Thank you for catching this. The High VSL has been modified from three years to four years.		
Alliant Energy Corp. Services, Inc. (4)	Non-binding Poll Comment	The Lower and High VSL for Requirement 2 have the same description. The Lower VSL has other possible items, but there is a conflict where an entity could argue for both a Lower and High VSL. That needs to be clarified.
Response: Thank you for your comments. Thank you for catching this. The High VSL has been modified from three years to four years.		
GDS Associates	No	1. Suggest clarification of the VSL for R2. It appears that R2 Lower VSL is also contained in the R2 High VSL. 2. If the maintenance is completed prior to the maximum interval, would it then reset the clock? Or should it read that maintenance should be done at least once per quarter? 3. The plan should split into generation time horizons and transmission time horizons since these can be significantly different
Response: Thank you for your comments. 1. Thank you for catching this. The High VSL has been modified from three years to four years. 2. Yes – it would reset the clock, provided that all required activities are completed during the performance of the maintenance. 3. The SDT disagrees. The options for the Time Horizons are "Long-term Planning" (a planning horizon of one year or longer), "Operations Planning" (operating and resource plans from day-ahead up to and including seasonal), "Same Day Operations" (actions required within the timeframe of a day, but not real-time), "Real-time Operations" (actions required within one hour or less to preserve the reliability of the bulk electric system), and "Operations Assessment" (follow-up evaluations and reporting of real time operations). All of the requirements are properly assigned a Time Horizon of "Long Term Planning". There is no provision for different Time Horizon between entity types.		
Alabama Power Company (3) Georgia Power Company (3) Gulf Power (3) Mississippi Power (3)	Non-binding Poll Comment	But only if the clean version on Page 7 under Violation Severity Levels R2/High VSL match the redline dated 4/12/2011. Entity has Protection System elements in a performance-based PSMP but has failed to reduce countable events to less than 4% within four years.
Response: Thank you for your comments. The clean version represents the content desired for the Standard. The red-line is affected by peculiarities of		

Organization	Yes or No	Question 3 Comment
the red-lining tool within Microsoft Word.		
Tampa Electric Company	No	VSL is severe for more than 4% Countable Events on R2. It does not seem feasible.
Response: Thank you for your comments. R2, by reference to Attachment A, requires that entities using performance-based maintenance reduce Countable Events to less than 4% within three years. The R2 Severe VSL reflects failure to do so within five years.		
Manitoba Hydro	No	1. VSL for Requirement 2:-Needs to use consistent terminology. The standard requirements refer to components and component types, not elements. 2. The violation "Entity has Protection System elements in a performance-based PSMP but has failed to reduce countable events to less than 4% within three years" appears in both the Lower VSL column and the High VSL column. The violation cannot be both Lower and High. VSL for Requirement R3: -Suggested wording "completed its scheduled program".
Manitoba Hydro (1) (3) (5) (6)	Non-binding Poll Comment	Manitoba Hydro is voting negative for the following reasons: 1. VSL for Requirement 2: -Needs to use consistent terminology. The standard requirements refer to components and component types, not elements. 2. The violation "Entity has Protection System elements in a performance-based PSMP but has failed to reduce countable events to less than 4% within three years" appears in both the Lower VSL column and the High VSL column. The violation cannot be both Lower and High. 3. VSL for Requirement R3: -Suggested wording "completed its scheduled program".
Response: Thank you for your comments. The term, "element" is not used in any of the VSLs. 2. Thank you for catching this. The High VSL has been modified from three years to four years. 3. The SDT disagrees; the VSL address failure to complete the scheduled program. The suggested change does not reflect this.		
Duke Energy	No	Typographical error - the High VSL for R2 has been incorrectly changed to "within three years" from "within four years". This is now the same as the Lower VSL.
Duke Energy	Non-binding Poll	There is a typographical error on the High VSL for R2. It has been incorrectly changed to "within three years" from "within four years". This is now the same as the Lower VSL.

Organization	Yes or No	Question 3 Comment
	Comment	
Response: Thank you for your comments. Thank you for catching this. The High VSL has been modified from three years to four years.		
Kristina M. Loudermilk	Non-binding Poll Comment	1. In VSL R2 I find it confusing for the Lower VSL and High VSL. In the Lower VSL for R2 #1 is mentioned, but again mentioned in High VSL. IS there an easier way to make that flow? 2. Also I found that I have forgotten a comment for the Standard itself.... In Attachment A, #5 is mentioned twice. I understand as to why, so I think, but in the "To Maintain" #5 says that one has to use the prior year's data. It matches the exact form of "how to establish the performance based PSMP". I find this confusing. So does this mean that testing will be once a year for parts of the segment. I did not get that same understanding from the support documents. Is there way to reword one of the #5's to show case a difference. Or is this on purpose? I just found it confusing.
Response: Thank you for your comments. 1. The High VSL has been modified from three years to four years. 2. The “first” #5 applies to establishing the performance-based program; the “second” one – now modified to be #4 in the second section, applies to maintaining the performance-based program on a continuing basis.		
Alliant Energy	No	The LOW and HIGH VSL for R2 are the same. There are additional possibilities for the LOW, but it is possible to be in both the LOW and HIGH VSL at the same time. We recommend removing #1 in the LOW VSL category to resolve the issue.
Response: Thank you for your comments. Thank you for catching this. The High VSL has been modified from three years to four years.		
The Detroit Edison Company	No	R2 - It appears that the Lower VSL point 1) and High VSL are identical.
Response: Thank you for your comments. Thank you for catching this. The High VSL has been modified from three years to four years.		
Consolidated Edison Co. of New York (1) (3) (5) (6)	Ballot Comment - Affirmative	Clarification is needed to assure that the industry more fully understands how the percentage of “maintenance correctable issues” will be computed in the R3 VSL.
Consolidated Edison Co. of New York (1) (5) (6)	Non-binding Poll	1: Clarification is needed to assure that the industry more fully understands how the percentage of “maintenance correctable issues” will be computed in the R3 VSL.

Organization	Yes or No	Question 3 Comment
	Comment	2: We recommend increasing the Table 2 reporting window from 24-hours to 72-hours for facilities not continuously manned in order to accommodate discovery and reporting of failed alarms at these facilities which may occur over a long (3-day) holiday weekend. 3: We recommend that the drafting team recognize that a “fail safe” or “self-reporting” alarm design serves as an acceptable alternative to periodic testing. This “fail safe” or “self-reporting” alarm design is equivalent to continuous testing the alarm. When the alarm circuit fails the alarm is set to “alarm on” and automatically notifies the control center, initiating a corrective action.
Response: Thank you for your comments. 1. The SDT believes that this is clear; if an entity has 20 maintenance-correctable issues and has failed to initiate resolution of one, it has failed to initiate resolution of 5% of the maintenance-correctable issues. 2. These comments are not relative to the non-binding poll of the VRFs and VSLs for PRC-005. Please see our response to your comments on the standard provided elsewhere in this report. 3. These comments are not relative to the non-binding poll of the VRFs and VSLs for PRC-005. Please see our response to your comments on the standard provided elsewhere in this report.		
Independent Electricity System Operator Independent Electricity System Operator (2)	No Non-binding Poll Comment	(1) We do not agree with the High VRF for R3 which asks for implementing the maintenance plan (and initiate corrective measures) whose development and content requirements (R1 and R2) themselves have a Medium VRF. Failure to develop a maintenance program with the attributes specified in R1, and stipulation of the maintenance intervals or performance criteria as required in R2, will render R3 not executable. Hence, we suggest that the VRF for R3 be changed to Medium. (2) The Severe VSL for R2 is improper. First, the reference to R3 is incorrect. Second, the first condition that says: “Failed to establish the entire technical justification described within R3 for the initial use of the performance-based PSMP” introduces a requirement not stipulated in R2 itself. We suggest to remove this condition. If the SDT feels strongly that the technical justification (we’re not sure what exactly it is) needs to be established for the initial use of the performance-based PSMP, then R2 should be revised to capture this requirement.
Response: Thank you for your comments. 1. The SDT believes that failure to maintain Protection Systems could “place the bulk electric system at an unacceptable risk of instability, separation, or cascading failures” as established in the criteria for a High VRF. This concern is borne out by observations relating to several disturbances over the last several years. However, even if the program is not fully documented per R1 and R2, devices may still be maintained; thus the reduced VRF for these requirements. Also, the R3 “High” VRF is consistent with the VRF assigned to the similar PRC-005-1 requirement (R2).		

Organization	Yes or No	Question 3 Comment
2. The Severe VSL for R2 has been corrected to refer to R2. The remainder of the Severe VSL for R2 is correct, in that R2 itself specifies that the procedure in Attachment A must be used, both to establish and maintain a performance-based maintenance program. The definition of maintenance correctable issue has been revised to be clearer.		
Tennessee Valley Authority	No	TVA has 590 Pilot Relay (Carrier Blocking) Terminals that are tested twice a year. After an extensive study of carrier failures over a 5-year period, it was determined that we were not having any failures that could have been prevented by a functional test. In January 2008, we reduced our frequency from 4 times per year to 2 times per year. The failure rate has remained about the same since that change. As PRC 005-2 currently states, the PM frequency would be 3 months. Allowing for a one-month grace period would actually require the interval to be set at 2 months. Therefore, the interval we used prior to 2008 (4 times per year) still would not make TVA compliant with the stated 3 month interval.TVA Power Control Systems is in the process of developing extensive PM tests for carrier terminals to complement the existing PM program. This PM would record signal levels, reflected power, line losses, and other pertinent data. It is my position that this PM will improve reliability more than increasing the frequency of the functional test.
Response: Thank you for your comments. These comments are not relative to the non-binding poll of the VRFs and VSLs for PRC-005. Please see our response to your comments on the standard provided elsewhere in this report.		
American Electric Power	No	This standard encompasses a very broad range of component types and functionality. It also encompasses broad segments of the BES. The proposed VSLs and VRFs place the same level of severity or priority on facilities that serve local load with that of an EHV facility. The percentages indicated in the VSLs seem to be too strict based upon the vast quantity of elements in scope and broad range of application.
Response: Thank you for your comments. The NERC criteria for VSLs do not currently permit them to allow some level of non-performance without being in violation. The NERC VRF Guidelines establish the criteria for assigning VRFs and do not provide for multiple VRFs for a single requirement, and the percentages (where used) assigned within the VSLs conform to the criteria established within the NERC VSL guidelines.		
FHEC	No	For Distribution Provider level equipment there should be no High or Severe VSLs
Response: Thank you for your comments. The SDT disagrees; the VSLs are intended to address the degree to which an entity fails to comply with each requirement, and the nature of the entity has no bearing on this determination.		

Organization	Yes or No	Question 3 Comment
Pepco Holdings Inc	No	1. Are the bullet items listed for the R2 Severe Violation Severity Level , Item 5 an "and" or an "or"? 5) Failed to: • Annually update the list of components, • Perform maintenance on the greater of 5% of the segment population or 3 components, • Annually analyze the program activities and results for each segment. 2. The wording of the R3 Lower Violation Severity Level seems to imply that an entity that fails to complete 0% (i.e., completes 100%) of its maintenance correctable issues is non-compliant. Entity has failed to complete scheduled program on 5% or less of total Protection System components. OR Entity has failed to initiate resolution on 5% or less of identified maintenance correctable issues. The following re-phrasing is suggested: Entity has failed to complete scheduled program on greater than 0%, but no more than 5% of total Protection System components. OR Entity has failed to initiate resolution on greater than 0%, but less than or equal to 5% of identified maintenance correctable issues.
Response: Thank you for your comments. 1. The VSL has been modified to separate these items with “or”. 2. The SDT disagrees; this description conforms to the guidance in the NERC VSL Guidelines, and VSLs only apply if there is a failure to comply with the relevant requirement.		
Liberty Electric Power LLC (5)	Non-binding Poll Comment	The use of percentages, without accounting for the size of the entity, unfairly burdens small IPPs.
Response: Thank you for your comments. The SDT disagrees. A smaller entity will have less to maintain in accordance with the standard, and thus the percentages are still appropriate.		
Liberty Electric Power LLC	No	See comments at end.
Response: Thank you for your comments. Please see our response to your other comments.		

Organization	Yes or No	Question 3 Comment
ExxonMobil Research and Engineering	No	
Consumers Energy (5)	Non-binding Poll Comment	see comment on R3
Response: Thank you for your comments. These comments are not relative to the non-binding poll of the VRFs and VSLs for PRC-005. Please see our response to your comments on the standard provided elsewhere in this report.		
New York Power Authority (1)	Yes	No comments.
Luminant	Yes	No comments.
BGE	Yes	No comments.
Luminant	Yes	No comments
Northeast Power Coordinating Council	Yes	
MISO Standards Collaborators	Yes	
Santee Cooper	Yes	
Imperial Irrigation District	Yes	
PNGC Comment Group	Yes	
MRO's NERC Standards Review Subcommittee	Yes	
FirstEnergy	Yes	

Organization	Yes or No	Question 3 Comment
Western Area Power Administration	Yes	
NextEra Energy	Yes	
Ingleside Cogeneration LP	Yes	
Central Lincoln	Yes	
Shermco Industries	Yes	
CPS Energy	Yes	
US Army Corps of Engineers	Yes	
Ameren	Yes	
Georgia Transmission Corporation	Yes	
ITC	Yes	
MidAmerican Energy Company	Yes	
Xcel Energy	Yes	
NIPSCO		no comments at this time
Northern Indiana Public Service Co. (3)	Non-binding Poll Comment	One of our concerns is that, while the present standard is 2 pages and is the most highly violated and fined standard, the new proposed standard is 22 pages, the implementation plan is 4 pages and the Supplemental FAQ document is 87 pages.
Response: Thank you for your comments. These comments are not relative to the non-binding poll of the VRFs and VSLs for PRC-005. Please see our		

Organization	Yes or No	Question 3 Comment
response to NIPSC's comments on the standard provided elsewhere in this report.		
Public Utility District No. 2 of Grant County	Non-binding Poll Comment	GCPD has made it a practical practice of not voting affirmative for VRF and VSL until the standard is edited to our satisfaction and can vote affirmative on the standard.
Response: Thank you for your comments. Please see the revisions made to the standard and the drafting team's responses to the comments.		
Florida Municipal Power Agency (4) (5) FMPP (6)	Non-binding Poll Comment	· Section 4.2.1 states that the Standard is applicable to "Protections Systems designed to provide protection BES Elements." Section 15.1 of the Supplementary Reference Document defines the scope as those "devices that receive the input signal from the current and voltage sensing devices and are used to isolate a faulted element of the BES." These two statements are not exactly equivalent, and in fact, are in conflict with the Interpretation of PRC-004-1 and PRC-005-1 for Y-W Electric and Tri-State, Approved by the Board of Trustees on February 17, 2011. Section 4.2.1 should be changed to "Any Protection System that is installed for the purpose of detecting faults on transmission elements (lines, buses, transformers, etc.) identified as being included in the Bulk Electric System (BES) and trips an interrupting device that interrupts current supplied directly from the BES." · Examples #1, #2 and #3 in Section 7.1 of the Supplementary Reference all indicate that it is a requirement to "verify all paths of control and trip circuits" every 12 years. As stated, there would be circuits included in the testing requirement that the SDT did not mean to include in the scope of the Standard (e.g., SCADA closing circuit.) The statements in the illustrative examples should be changed to "verify all paths in the control circuitry associated with protective functions through the trip coil(s) of the circuit breakers or other interrupting devices" to be in line with the definition of a Protection System. · Section 15.5 of the Supplementary Reference Document states: "It was the intent of this Standard to require that a test be made of any communications-assisted trip scheme regardless of the vintage of the technology. The essential element is that the tripping (or blocking) occurs locally when the remote action has been asserted; or that the tripping (or blocking) occurs remotely when the local action is asserted". The SDT should reword this statement recognizing that tests performed on communication systems may not be performed at the same time an entity chooses to perform trip tests on the associated breaker(s). The notion of "overlapping" can be applied, for instance, by taking an outage on one relay set in a fully redundant system, initiating a trip signal from the remote end and observing

Organization	Yes or No	Question 3 Comment
		the trip signal locally. All remaining portions in the local communication-assisted trip paths can then be tested when the local line panel is taken out of service for maintenance.
Response: Thank you for your comments. These comments are not relative to the non-binding poll of the VRFs and VSLs for PRC-005. Please see our response to the same comments on the proposed standard provided elsewhere in this report.		
Seattle City Light (5)	Non-binding Poll Comment	Pursuant to the negative ballot relating to the Standard. Both votes will be affirmed if the comments are addressed.
Response: Thank you for your comments. Please see the drafting team's responses to the comments offered by Seattle on the proposed standard.		
Seattle City Light (6)	Non-binding Poll Comment	Seattle City Light (SCL) commends the Standard Drafting Team (SDT) for the many improvements in the latest draft of proposed standard PRC-005-2. The proposed PRC-005-2 standard is an improvement over the four standards that it will replace. Each draft has been better than that preceding, and the supporting material is very helpful in understanding the impact and implementation of the proposed Standard. However, SCL votes NO for this draft because of 1) the inclusion and treatment of electromechanical lockout relays within the scope of draft Standard and 2) confusion about language between section 4.2 and Requirement 1. Regarding electromechanical lockout relays, SCL is highly concerned about the reliability risks and logistical difficulties associated with meeting the requirements proposed for these relays. Lockout relays operate rarely and are known for reliable service. For many such relays, the proposed maintenance would require clearance of entire bus sections or even multiple bus sections (such as for a bus differential lockout relay). In SCL's opinion, the reliability risks posed by such switching and outages to the Bulk Electric System outweigh the reliability benefits of including lockout relays in the scope of PRC-005-2. If the SDT deems it necessary to include electromechnical lockout relays within PRC-005-2, SCL recommends that a difference be made between the maintenance activities specified for monitored and unmonitored types. The draft Standard describes the requirements for "electromechanical lockout and/or tripping auxiliary devices" in Table 1-5 (p.19) and assigns a 6-year maximum maintenance interval, the same as for other unmonitored relays. Modern electromechanical lockout relays may be specified with a built-in self-monitoring trip-coil alarm. SCL believes the maintenance requirements for electromechanical lockout relays with such an alarm should be similar to those for other alarmed or monitored relays. As such we recommend that a new entry be added to Table 1-5 for monitored electromechanical

Organization	Yes or No	Question 3 Comment
		lockout relays, as follows: • Component Attributes: Electromechanical lockout and/or tripping auxiliary devices which are directly in a trip path from the protective relay to the interrupting device trip coil AND include built-in self-monitoring trip-coil alarm • Maximum Maintenance Interval: 12 calendar years • Maintenance Activities: Verify electrical operation of electromechanical trip and auxiliary devices. Verify that the alarm path conveys alarm signals to a location where corrective action can be initiated. Regarding confusion over language, section 4.2 section identifies five types of Facilities that the standard is applicable to, whereas Requirement 1 indicates that applicable entities need to establish a Protection System Maintenance Program (PSMP) for the Protection Systems designed to provide protection for BES Element(s) (Part 4.2.1 of Section 4.2). As such, it is not clear if PRC-005-2 applies to five Facilities or to certain Protection Systems. SCL believes the intent is to have a PSMP for all Protection Systems identified in "Part A, Section 4.2 - Facilities" and that the language of Requirement 1 may cause confusion or be misleading. We suggest changing the language of Requirement 1 from: • Each Transmission Owner, Generator Owner, and Distribution Provider shall establish a Protection System Maintenance Program (PSMP) for its Protection Systems designed to provide protection for BES Element(s). to: • Each Transmission Owner, Generator Owner, and Distribution Provider shall establish a Protection System Maintenance Program (PSMP) for its Facilities identified in Part A, Section 4.2.
Response: Thank you for your comments. These comments are not relative to the non-binding poll of the VRFs and VSLs for PRC-005. Please see our response to the same comments on the proposed standard provided elsewhere in this report.		
Beaches Energy Services (1)	Non-binding Poll Comment	We believe that there is an unnecessary expansion of the scope of equipment covered by this standard into the distribution system related to UVLS and UFLS. Currently, PRC-005-1 includes batteries, instrument transformers, DC control circuitry and communications in addition to the relays for BES protection systems. PRC-008 (UFLS) and PRC-011 (UVLS) are ambiguous as to whether non-relay components are included in those standards. The new PRC-005-2 includes these non-relay components into UFLS and UVLS. The problem is, for UFLS and UVLS, these non-relay components are mostly distribution class equipment; hence, the result of this version 2 standard will be inclusion of most distribution class protection system components into PRC-005-2. This is a huge expansion of the scope of equipment covered by the standard with negligible benefit to BES reliability. We agree wholeheartedly with the inclusion of non-relay components for BES Protection Systems. It is critical

Organization	Yes or No	Question 3 Comment
		that BES Protection Systems work and clear the fault (e.g., on > 100 kV Facilities). However, UFLS and UVLS are quite different. For an event requiring UFLS and UVLS operation, there are many, e.g., hundreds and possibly thousands of relays, that operate to shed load automatically and if a small percentage of those do not operate as expected, the impact is minimal. So, it is not important for BES reliability to include non-relay components of UFLS and UVLS in the PRC-005-2 standard. In addition, testing of protection systems on distribution circuits is difficult for distribution circuits that are radial in nature. For instance, testing trip coils of distribution breakers will likely result in service interruption to customers on that distribution circuit in order to test the breaker or to perform break-before-make switching on the distribution system often required to manage maximum available fault current on the distribution system for worker safety, etc.. Hence, the standard would be sacrificing customer service quality for an infinitesimal increase in BES reliability. In addition, non-relay protection components operate much more frequently on distribution circuits than on Transmission Facilities due to more frequent failures due to trees, animals
Response: Thank you for your comments. These comments are not relative to the non-binding poll of the VRFs and VSLs for PRC-005. Please see our response to the same comments on the proposed standard provided elsewhere in this report.		
City of Green Cove Springs (3)	Non-binding Poll Comment	GCS believes that there is an unnecessary expansion of the scope of equipment covered by this standard into the distribution system related to UVLS and UFLS. Currently, PRC-005-1 includes batteries, instrument transformers, DC control circuitry and communications in addition to the relays for BES protection systems. PRC-008 (UFLS) and PRC-011 (UVLS) are ambiguous as to whether non-relay components are included in those standards. The new PRC-005-2 includes these non-relay components into UFLS and UVLS. The problem is, for UFLS and UVLS, these non-relay components are mostly distribution class equipment; hence, the result of this version 2 standard will be inclusion of most distribution class protection system components into PRC-005-2. This is a huge expansion of the scope of equipment covered by the standard with negligible benefit to BES reliability. GCS agrees wholeheartedly with the inclusion of non-relay components for BES Protection Systems. It is critical that BES Protection Systems work and clear the fault (e.g., on > 100 kV Facilities). However, UFLS and UVLS are quite different. For an event requiring UFLS and UVLS operation, there are many, e.g., hundreds and possibly thousands of relays, that operate to shed load automatically and if a small percentage of those do not operate as expected, the impact is minimal. So, it is not important for BES reliability to include non-relay components of UFLS and UVLS in the PRC-005-2 standard. In addition, testing of protection systems on distribution circuits is difficult for distribution circuits that are radial in nature. For instance, testing trip coils of a distribution breakers will likely results in service interruption to customers on that distribution circuit in order to test the breaker or to perform break-

Organization	Yes or No	Question 3 Comment
		before-make switching on the distribution system often required to manage maximum available fault current on the distribution system for worker safety, etc.. Hence, the standard would be sacrificing customer service quality for an infinitesimal increase in BES reliability. In addition, non-relay protection components operate much more frequently on distribution circuits than on transmission Facilities due to more frequent failures due to trees, animals, lightning, traffic accidents, etc., and have much less of a need for testing since they are operationally tested. As another comment, station service transformers are not BES Elements and should not be part of the Applicability - they are radial serving only load.
Response: Thank you for your comments. These comments are not relative to the non-binding poll of the VRFs and VSLs for PRC-005. Please see our response to the same comments on the proposed standard provided elsewhere in this report.		
ReliabilityFirst	Non-binding Poll Comment	ReliabilityFirst agrees with the VRFs but votes negative on the VSLs for the following reasons: 1. VSL for R1 a. Part 1.3 is not mentioned in the VSLs b. The VSLs should start off with the phrase “The responsible entities PSMP…” c. For the VSLs dealing with Part 1.2, the term “or a combination” should be added as one of the methods for maintenance. d. The last VSL under the Severe category should reference Part 1.2 e. The VSLs for Part 1.1 should be gradated similar to Part 1.2 (e.g. what VSL does an entity fall under if they failed to address two component types included in the definition of ‘Protection System’?) 2. VSL for R2 a. To be consistent with Requirement 2, the VSLs should start off with the phrase “The responsible entity uses performance-based maintenance intervals in its PSMP, but…” b. The first VSL under the “Lower” category is a duplicate of the VSL under the “High” category c. The third VSL under the “Lower” category has language stating “or containing different manufacturers.” Neither R2 nor Attachment A mentions this language. This is a violation of the FERC Guideline 3: “Violation Severity Level Assignment Should Be Consistent with the Corresponding Requirement” d. Recommend that the VSL regarding entities that “maintained a segment with less than X amount of components” should be a binary “Severe” VSL 3. VSL for R3 a. The VSLs should start off with the phrase “The responsible entity…”

Organization	Yes or No	Question 3 Comment
		b. R3 does not require an entity to "…complete scheduled program…" This is a violation of the FERC Guideline 3: "Violation Severity Level Assignment Should Be Consistent with the Corresponding Requirement" c. The "implement and follow its PSMP" language in R3 is not mentioned in the VSLs for R3. Recommend including this language in the VSLs for R3

Response: Thank you for your comments.

1.

a. Part 1.3 has been added to the R1 High VSL.

b. The R1 Lower, Medium, and Higher VSLs have been modified as you suggest.

c. The R1 Lower, Medium, and Severe VSLs have been modified as you suggest.

d. The R1 Severe VSL has been modified as you suggest

e. The R1 Moderate and High VSLs have been modified to add graduated VSLs for part 1.1.

2.

a. The R2 VSLs have been modified as you suggest.

b. Thank you for catching this. The High VSL has been modified from three years to four years.

c. This portion of the R2 Lower VSL has been removed, making the VSL for this portion of R2 binary (with only a Severe VSL).

d. The VSL for R2 has been modified as you suggest.

3.

a. The R3 VSLs have been modified as you suggest.

b. The R3 VSLs have been modified by replacing "complete" with "implement and follow" in consideration of your comment.

c. The R3 VSLs have been modified by replacing "complete" with "implement and follow" in consideration of your comment.

4. The SDT has incorporated the FAQ document into the "Supplementary Reference" document and has provided the combined document as support for the Requirements within the standard. Do you have any specific suggestions for further improvements?

Summary Consideration: The commenters were generally supportive of the combination of documents.

Several comments were offered, repeating previous questions regarding the enforceability of this document, and the SDT repeated previous responses explaining the status of this document as a supporting reference – reference documents have no enforceability.

A variety of suggestions were offered regarding additional information for the document, which largely resulted in modifications to the Supplementary Reference document. One specific suggestion of note (resulting in additional discussion within the document) requested a FAQ regarding "Calendar Year".

Several commenters posed questions regarding "grace periods" and "PSMPs established by entities that are more stringent than the requirements within the standard". No additional changes were made due to these questions, but the SDT further explained previous guidance on these issues within the responses. Entities are always allowed to implement practices that are more stringent than those identified in a standard.

Organization	Yes or No	Question 4 Comment
Manitoba Hydro		A red line was not provided making this document difficult to review. We suggest that a redline of this document be posted.
Response: Thank you for your comments. A red-line was not provided because of overall extensive changes, resulting from merging of the previous Supplementary Reference Document and FAQ; the entire document would have been red-line. The next posting will include a red-lined document, as well as the "clean" document.		
U.S. Bureau of Reclamation (5)	Ballot Comment - Affirmative	1. The reference material provides a significant insight into the intent of the proposed changes to the standard. In some cases an interpretation is provided which is not supported by the explicit interpretation of the standard text. The SDT is encouraged to either attach the reference material to the standard or add relevant sections to standard as Background. The Background section could reference the Supplemental Reference & FAQ. 2. The reference material provides more detail indicating that "Voltage & Current Sensing Device circuit input

Organization	Yes or No	Question 4 Comment
		connections to the protection system relays can be verified by (but not limited to) comparison of measured values on live circuits or by using test currents and voltages on equipment out of service for maintenance. . . . . The values should be verified to be as expected, (phase value and phase relationships are both equally important to verify).” This interpretation is not consistent with the text of the standard and would suggest that it be incorporated into Table 1-3. 3. When protective equipment is replaced, the reference information indicates that the information associated with the original equipment must be retained to show compliance with the standard until the performance with the new equipment can be established. This is not stated in the Measurements and should be added if the expectation exists.
Response: Thank you for your comments. 1. This standard is not being developed in a “results-based” format. Attaching the extra document as you suggest would make the supporting information within the FAQ and Supplementary Reference part of the standard, and this would add extensive and unnecessary prescription to the standard. As you suggest the reference material is listed within the Standard (Section F – Supplemental Reference Document). The next revision will likely resemble your suggestion. 2. Details within the Supplemental Reference Document are provided as examples and should not be construed as limitations or additional requirements. The intent of the supplementary information is to spur insight into possible means of satisfying requirements and is not intended to promote a single technical method of accomplishing tasks. 3. M1 states “Each Transmission Owner, Generator Owner, and Distribution Provider shall have evidence that it has implemented the Protection System Maintenance Program and…” Documenting the implementation of the PSMP certainly requires evidence that maintenance was performed at the prescribed intervals and the data retention requirements state that evidence of the two most recent performances of each distinct maintenance activity be retained. Also, please see the NERC Compliance Process Bulletin #2011-001 (“Data Retention Requirements”) for similar guidance.		
Ameren Services (1)	Ballot Comment – Affirmative	1. Omit retention of maintenance records for replaced equipment. Supplement FAQ 12.1 on page 51 final sentence states that documentation for replaced equipment must be retained to prove the interval of its maintenance. We oppose this because: the replaced equipment is gone and has no impact on BES reliability; and such retention clutters the data base and could cause confusion. For example, it could result in saving lead acid battery load test data beyond the life of its replacement. Since BES Element protection is the objective, we suggest a compromise of keeping the evidences of last test for the removed equipment and using that with the equivalent function replacement equipment commissioning or in-service date to prove interval. 2. In Supplement examples on pp 22-23, replace “Instrumentation transformers” with “Verify that current and voltage signal values are provided to the protective relays” to be consistent with Table 1-3. 3. Remove “Reverse power relays” from the sample list of generator devices in Supplement p31 because reverse power relays are applied for mechanical protection of the prime mover, not electrical protection of the

Organization	Yes or No	Question 4 Comment
		generator. 4. Revise Supplement Figure 1 & 2 Legend p83 to align with Draft 4 (a) state "Protective relays designed to provide protection for BES Element(s)" (b) state "Current and voltage signals provided to the protective relays". 5. Please add a Performance-Based maintenance example for control circuitry, and /or voltage and current sensing.
Response: Thank you for your comments. 1. This cited reference in the Supplementary Reference Document is present to maintain consistent evidence that maintenance was performed within prescribed intervals. Please see the NERC Compliance Process Bulletin #2011-001 ("Data Retention Requirements") for similar guidance. 2. Thank you, the change has been made. 3. The commenter is correct that it is the prime mover that is protected by the Reverse Power relay; however the Standard considers relays (such as Reverse Power relays) that sense voltage and current are within the scope. Furthermore, Part 4.2.5.1 (Applicability) of the Standard includes Protection Systems for generator Facilities that are part of the BES including Protection Systems that act to trip the generator either directly or via generator lockout or auxiliary tripping relays. 4. The column marked Component of Protection System closely aligns with the definition of Protection System as approved by the NERC Board of Trustees and is included within the Standard itself. The next column ("Includes") is more explanatory in nature and is intended to give insight on the SDT's intent. 5. Thank you, the requested changes have been made. Additional Q&A (including one for control circuitry and one for voltage and current sensing devices) have been added to Section 9.2.		
National Grid (1)	Ballot Comment - Affirmative	National Grid suggests that FAQ be added: 1. Regarding Table 2 in the standard, Does a fail-safe "form b" contact that is alarmed to a 24/7 operation center classify as an alarm path with monitoring? 2. Please add a clarification as part of the FAQ document that defines whether the control circuitry and trip coil of a non-BES breaker, tripped via a BES protection component, must be tested per Table 1.5.
Response: Thank you for your comments. 1. Thank you, the change has been made. An additional Q&A has been added to Section 15.6.1. 2. Thank you, the change has been made. An additional Q&A has been added to Section 15.3.1.		

Organization	Yes or No	Question 4 Comment
New York Power Authority (1)	Ballot Comment - Affirmative	Comments: We suggest that FAQ be added: 1. Regarding Table 2 in the standard, Does a fail-safe "form b" contact that is alarmed to a 24/7 operation center classify as an alarm path with monitoring? 2. Please add a clarification as part of the FAQ document that defines whether the control circuitry and trip coil of a non-BES breaker, tripped via a BES protection component, must be tested per Table 1.5.
Response: Thank you for your comments. 1. Thank you, the change has been made. An additional Q&A has been added to Section 15.6.1. 2. Thank you, the change has been made. An additional Q&A has been added to Section 15.3.1.		
Muscatine Power & Water (3)	Ballot Comment - Affirmative	In the "Supplemental Reference and FAQ" document on page 65 there is one area of concern. In paragraph 4 "…the type of test equipment used to establish the baseline must be used for any future trending of the cells internal ohmic measurements because of variances in test equipment and the type of ohmic measurement used by different manufacturer's equipment." While MP&W understands the importance of creating a valid baseline, it is disingenuous to expect the test equipment to be the same as the manufacturer's test equipment. For that matter, it would be highly unlikely the same test equipment would be used over the life of the battery. The expected life of a battery may be in excess of 15 years in most cases and it would not be probable to expect that the type of test equipment is not going to change during this period. MP&W suggests changing the wording to read that CONSISTENT test equipment should be used to provide consistent/comparable results.
Response: Thank you for your comments, the change has been made. The statements concerning types of equipment have been changed per your suggestion to reflect consistent test data as opposed to exactly the same piece of test equipment.		
Florida Municipal Power Agency (4) (5) (6) Florida Municipal Power Pool (6)	Ballot Comment - Negative	1. Examples #1, #2 and #3 in Section 7.1 of the Supplementary Reference all indicate that it is a requirement to "verify all paths of control and trip circuits" every 12 years. As stated, there would be circuits included in the testing requirement that the SDT did not mean to include in the scope of the Standard (e.g., SCADA closing circuit.) The statements in the illustrative examples should be changed to "verify all paths in the control circuitry associated with protective functions through the trip coil(s) of the circuit breakers or other interrupting devices" to be in line with the definition of a Protection System. 2. Section 15.5 of the Supplementary Reference Document states: "It was the intent of this Standard to require that a test be made of any communications-assisted trip scheme regardless of the vintage of the technology. The essential element is that the tripping (or blocking) occurs locally when the remote action

Organization	Yes or No	Question 4 Comment
		has been asserted; or that the tripping (or blocking) occurs remotely when the local action is asserted". The SDT should reword this statement recognizing that tests performed on communication systems may not be performed at the same time an entity chooses to perform trip tests on the associated breaker(s). The notion of "overlapping" can be applied, for instance, by taking an outage on one relay set in a fully redundant system, initiating a trip signal from the remote end and observing the trip signal locally. All remaining portions in the local communication-assisted trip paths can then be tested when the local line panel is taken out of service for maintenance.
Response: Thank you for your comments. 1. Thank you, the change has been made. 2. Thank you, the change has been made.		
ITC	No	We agree with the combination of the two. One document with the FAQ's grouped with the supplemental topics makes it easier to review the whole topic.
Response: Thank you for your comments.		
Central Lincoln	No	The first FAQ under 2.3.1 is incorrect, referencing a FERC informational filing. Included in the filing was a WECC test that was never approved by the WECC board and is not being used. Using this document as suggested will get WECC entities into trouble.
Response: Thank you for your comments. There are presently regional differences allowed that may cease to exist once the BES is redefined. The SDT for the BES Definition (Project 2010-17) is charged with developing a continent-wide BES definition; however, this FERC informational filing is on the public record, and was part of the basis for FERC Order 743.		
Tampa Electric Company	No	Tampa Electric requests further differentiation between BES protection elements and UFLS equipment.
Response: Thank you for your comments. UFLS equipment is presently covered under PRC-008. PRC-005-2 will cover all Protection Systems components including components used for UFLS. The Standard addresses UFLS and UVLS to the degree that they are installed per NERC Standards, even though entities may choose to install them on distribution systems. This is an intentional difference between UFLS/UVLS and the remainder of the Protection Systems addressed within the Standard, because of the distributed nature of UFLS/UVLS and because these devices are usually tripping non-BES system elements.		
Electric Market Policy	No	
Santee Cooper	No	

Organization	Yes or No	Question 4 Comment
SPP reliability standard development Team	No	
Tennessee Valley Authority	No	
Imperial Irrigation District	No	
MRO's NERC Standards Review Subcommittee	No	
The Detroit Edison Company	No	
NextEra Energy	No	
Western Electricity Coordinating Council	No	
Ingleside Cogeneration LP	No	
Farmington Electric Utility System	No	
Illinois Municipal Electric Agency	No	
Shermco Industries	No	
Dominion Virginia Power	No	
American Electric Power	No	
CPS Energy	No	
Indeck Energy Services	No	
MidAmerican Energy Company	No	

Organization	Yes or No	Question 4 Comment
NIPSCO	Yes	We used the FAQ Supplemental Reference while reviewing this draft standard and found it useful.
Response: Thank you for your comments.		
FirstEnergy	Yes	1. We do not agree with the following wording on page 37 of the reference document: (1) "If your PSMP (plan) requires more activities then you must perform and document to this higher standard." and (2) "If your PSMP (plan) requires activities more often than the Tables maximum then you must perform and document those activities to your more stringent standard." 2. We continue to believe that the auditor is required to audit to the standard. If the standard requires maintenance intervals every 6 years, this is what the auditor should verify. This was also verified in the recent NERC Workshop at which it was confirmed that "auditors must audit to the standard". To this end, we also suggest changes to Requirement R3 as explained in our comments in Question 5.
Response: Thank you for your comments. 1. The SDT respectfully disagrees with the commenter. R1 of the Standard states that "… shall establish a Protection System Maintenance Program (PSMP)…, and R3 states that "… shall implement and follow its (PSMP)…" Therefore, if an entity has a more stringent PSMP then they must follow their own PSMP. An example of this might be a case that has an entity with Performance Based Maintenance; this entity could find time intervals between maintenance activities that are more frequent than are laid out in the Tables. This entity must follow their PSMP. Another example might be an entity that requires CT Saturation tests every 10 years; this is a more stringent requirement than is contained within the minimum maintenance activities of the Standard. Neither the SDT nor any auditor has any idea why an entity may require more stringent requirements of themselves than the Standard requirements. Even under the present PRC-005-1 an auditor audits to the entity's PSMP; a case in point is if an entity PSMP requires relay testing with simulated fault values of voltage and current every year then they are audited to that requirement (even though PRC-005-1 specifically does not require any particular relay testing and certainly has no time intervals stated). Please note that FERC Order 693 directs NERC to establish maximum allowable intervals not minimum intervals, and the entity's program must, at a minimum, conform to those intervals. 2. The SDT has set no requirements that an entity have a more stringent PSMP than the minimum requirements set out in the Standard, only that any PSMP meet the minimums laid out within the Standard. But, should an entity have a PSMP that is more stringent then, according to R3, they must maintain to their own more stringent PSMP.		
BGE	Yes	1. The supplementary reference on page 30, under the question beginning "Our maintenance plan requires" states that an entity is "out of compliance" if maintenance occurs at a time longer than that specified in the entity's plan, even if that maintenance occurred at less than the maximum interval in PRC-005-2. But then on page 35, under the question, "How do I achieve a grace period without being out of compliance" provides an example of scheduling maintenance at four year intervals in order to manage scheduling complexities and assure completion in less in less than the maximum time of six calendar years. This is

Organization	Yes or No	Question 4 Comment
		conflicting advice. The FAQ /supplementary reference should be revised so that it does imply that an entity is out-of-compliance by performing maintenance more frequently than required. Avoiding compliance risk is one reason to do this, but there are other valid motives not directly related to reliable protection system performance. 2. Testing of PT's and CT's (12 year max) is non invasive and convenient to schedule at the same time as relays (6 year max) just to keep procedures consistent and reduce program administration. Testing of ties to other TOs or GOs may have to be scheduled more frequently than preferred in order to synchronize schedules.
Response: Thank you for your comments. 1. There is no conflict, the first commenter-cited PSMP example has language that has no grace-period built in, and the second commenter-cited PSMP example has language with a built-in grace period. Both cited examples are measurable to a time limit between testing activities. 2. Your observations are correct; an entity may choose to perform activities more often than is specified in the Standard. For that matter, an entity may choose to perform activities more often than their own PSMP; the entity simply cannot exceed their own PSMP intervals which in turn cannot exceed the intervals in the Standard.		
Pepco Holdings Inc	Yes	The Supplementary Reference and FAQ should be an attachment to the standard (Appendix A) and not just referenced. If not attached it will not be readily accessible to those that will be using the standard.
Response: Thank you for your comments. The Supplementary Reference and FAQ is referenced in Section F of the standard (which was on Page 9 of the clean version of the recent posting), in accordance with the Standards Development Process, and will be posted with the standard as "Reference Materials".		
GDS Associates	Yes	The standard should include a footnote indicating this document as reference
Response: Thank you for your comments. This document is addressed within the Standard as a reference document by listing it in Section F (which was on Page 9 of the clean version of the recent posting), in accordance with the Standards Development Process.		
ExxonMobil Research and Engineering	Yes	The SDT should provide notes that reference the sources used for developing the maximum maintenance intervals utilized in the time-based program, and provide a technical explanation as to why they have not provided a tolerance band for use with the time-based program. What is the increase in risk owned by an entity when a protective device is tested at the 6 year and 30 day mark instead of the 6 year mark?
Response: Thank you for your comments. The SDT was tasked to create a standard with maximum time intervals between maintenance activities. Thus the task, in and of itself, sets the limit as absolute. Where the intervals were set at six years (or any interval for that matter), there was no assessment of risk beyond the time interval chosen as the absolute. The question always would arise as "Why not an additional thirty days after that?" The reference material cites methodology		

Organization	Yes or No	Question 4 Comment
to determine initial time intervals. The SDT took further care to try to align the initial maintenance intervals with common maintenance schedules like plant outages and other published guidelines. Please note that the Tables refer to "Calendar Year" for the intervals referenced in the comment; the noted concern would only be relevant if the entity actually completes the activity at the very end of the calendar year.		
US Army Corps of Engineers	Yes	1. The reference material provides a significant insight into the intent of the proposed changes to the standard. In some cases an interpretation is provided which is not supported by the explicit interpretation of the standard text. The SDT is encouraged to either attach the reference material to the standard or add relevant sections to standard as Background. The Background section could reference the Supplemental Reference & FAQ. 2. The reference material provides more detail indicating that "Voltage & Current Sensing Device circuit input connections to the protection system relays can be verified by (but not limited to) comparison of measured values on live circuits or by using test currents and voltages on equipment out of service for maintenance. . . . . The values should be verified to be as expected, (phase value and phase relationships are both equally important to verify)." This interpretation is not consistent with the text of the standard and would suggest that it be incorporated into Table 1-3.
Response: Thank you for your comments. 1. This standard is not being developed in a "results-based" format. As you suggest the reference material is listed within the Standard (Section F – Supplemental Reference Document). The next revision will likely resemble your suggestion. 2. Details within the Supplemental Reference Document are provided as examples and should not be construed as limitations or additional requirements. The intent of the supplementary information is to spur insight into possible means of satisfying requirements and is not intended to promote a single technical method of accomplishing tasks.		
Luminant	Yes	The document was valuable in understanding PRC-005-2 by providing clarification using practical protective relay system examples. Below are two comments for further improvement. 1. It would be beneficial if the document could provide additional information for relaying in the high-voltage switchyard (transmission owned) - power plant (generation owned) interface. While Figures 1 and 2 are typical generation and transmission relay diagrams, it would be helpful if protective relays typically used in the interface also be included. For example, a transmission bus differential would remove a generator from service by tripping the generator lockout. 2. Figures 1 and 2 refer to a "Figure 1 and 2 Legend" table which provides additional information on qualifications for relay components. Should a footnote be used to point toward Reference 1 (Protective

Organization	Yes or No	Question 4 Comment
		System Maintenance: A Technical Reference) located in Section 16?
Response: Thank you for your comments. 1. There are so many variations possible that it is impractical to try to capture all configurations on a single picture or in a single document. However, for the cited example - a transmission bus Protection System would be included. All five of the Protection System component types would fall within the Standard including the trip paths and the electrical test requirements of the generator lockout device. 2. Thank you, a link has been provided to the references.		
MISO Standards Collaborators	Yes	The additional documentation seems to be quite large, and the additional content seems to go far beyond what is necessary for the PRC-005-2 standard. We recommend the SDT lessen the amount of content provided in the "Supplementary Reference" document.
Response: Thank you for your comments. Details within the Supplemental Reference Document are provided as examples and should not be construed as limitations or additional requirements. The intent of the supplementary information is to spur insight into possible means of satisfying requirements and is not intended to promote a single technical method of accomplishing tasks.		
Northeast Power Coordinating Council	Yes	Suggest that to FAQ be added: 1. Regarding Table 2 in the standard, does a fail-safe "form" contact that is alarmed to a 24/7 operation center qualify as an alarm path with monitoring? 2. Add a clarification as part of the FAQ document that defines whether the control circuitry and trip coil of a non-BES breaker, tripped via a BES protection component, must be tested as per Table 1.5.
Response: Thank you for your comments. 1. Thank you, the change has been made. An additional Q&A has been added to Section 15.6.1. 2. Thank you, the change has been made. An additional Q&A has been added to Section 15.3.1.		
Georgia Transmission Corporation	Yes	See comments for item 1 and continue clarification where we could include high side or distributed interrupting devices, exchange nomenclature removing distribution breaker and adding distributed interrupting device or non-BES equipment.
Response: Thank you for your comments. Circuit interrupting devices that only participate in a UFLS or UVLS scheme are excluded from the tripping requirement, but not from the circuit test requirements. The "non-BES equipment interruption device" phrase has been inserted as suggested.		

Organization	Yes or No	Question 4 Comment
PNGC Comment Group	Yes	Section 9.2 (copied below) indicates that small entities can utilize Performance-Based PSMP if they aggregate with other entities. Does this section indicate that only a parent entity with individually owned components can aggregate, or can independent entities under a G&T aggregate? In other words, individual DP/LSE/TOs with different audits. Can they aggregate under a common PSMP for performance based maintenance? 9.2 Frequently Asked Questions: I'm a small entity and cannot aggregate a population of Protection System components to establish a segment required for a Performance-Based Protection System Maintenance Program. How can I utilize that opportunity? Multiple asset owning entities may aggregate their individually owned populations of individual Protection System components to create a segment that crosses ownership boundaries. All entities participating in a joint program should have a single documented joint management process, with consistent Protection System Maintenance Programs (practices, maintenance intervals and criteria), for which the multiple owners are individually responsible with respect to the requirements of the Standard. The requirements established for performance-based maintenance must be met for the overall aggregated program on an ongoing basis. The aggregated population should reflect all factors that affect consistent performance across the population, including any relevant environmental factors such as geography, power-plant vs. substation, and weather conditions.
Response: Thank you for your comments. Two entities in such a shared program must have populations of components that can be aggregated and the PSMP for those components are the same between the two entities. Thus the combined entities can show total populations, total numbers of components tested and total failures found. The combined entities would thus be forced to follow the same intervals, test procedures and statistical analysis. There would have to be cooperation between entities but in the end the outcome would be the same as if the PBM process were applied to a single entity. There is no inherent advantage or disadvantage to multiple entities cooperating in such a manner. The SDT intends that small entities with small populations of equipment have the same access to PBM as the larger entities.		
FHEC	Yes	It is unclear what compliance obligations may be created or clarified with the FAQ. It is a good explanatory document and a helpful reference, but the Standard should speak for itself as it relates to what it takes to achieve compliance.
Response: Thank you for your comments. The Standard is the only "mandatory and enforceable" document. Details within the Supplemental Reference Document are provided as examples and should not be construed as limitations or additional requirements. The SDT intends that it be posted as a Reference Document, accompanying the standard. As established in SDT Guidelines, the Standard is to be a terse statement of requirements, etc, and is not to include explanatory information like that included in the Supplementary Reference Document. The Supplementary Reference FAQ will be revised in the course of the revision process of the standard.		
Western Area Power	Yes	Can the SDT add a better definition or clarification of "Calendar Year" as it pertains to PRC-005-2 and provide

Organization	Yes or No	Question 4 Comment
Administration		examples or parameters of Compliance with the Standard requirements and tables? Calendar Year is explained in various details within Pages 35-Pages 37 of the Supplementary Reference and FAQ. This important attribute of a TBM or TBM/CBM combination program is not easily found in the Table of Contents or section sub-headings.
Response: Thank you for your comments. Per your suggestion, a "What is a Calendar Year?" Q&A has been added to the front end of Section 7.1.		
Duke Energy	Yes	Along the lines of what we have suggested in our comment to Question #1 above, we believe it would make compliance more certain if selected language from the Supplementary reference could be incorporated into the standard, either directly in requirements, or in footnotes.
Response: Thank you for your comments. The addition that you suggest is properly considered application guidance; the SDT has been advised that this information is not to be included within the standard, and that it is appropriately included in separate reference materials.		
Ameren	Yes	1. Comments: Supplement FAQ 12.1 on page 51 final sentence states that documentation for replaced equipment must be retained to prove the interval of its maintenance. We oppose this because: the replaced equipment is gone and has no impact on BES reliability; and such retention clutters the data base and could cause confusion. For example, it could result in saving lead acid battery load test data beyond the life of its replacement. Since BES Element protection is the objective, we suggest a compromise of keeping the evidences of last test for the removed equipment and using that with the equivalent function replacement equipment commissioning or in-service date to prove interval. 2. Clarify p17 Table 1-4(e) interval meaning. We think this means we need to verify the Station dc supply voltage on 12 calendar year interval if unmonitored, or no periodic maintenance if monitored as stated. 3. In Supplement examples on pp 22-23, replace "Instrumentation transformers" with "Verify that current and voltage signal values are provided to the protective relays" to be consistent with Table 1-3. 4. Remove "Reverse power relays" from the sample list of generator devices in Supplement p31 because reverse power relays are applied for mechanical protection of the prime mover, not electrical protection of the generator. 5. Revise Supplement Figure 1 & 2 Legend p83 to align with Draft 4 (a) state "Protective relays designed to provide protection for BES Element(s)". (b) state "Current and voltage signals provided to the protective relays" 6. Please add a Performance-Based maintenance example for control circuitry, and /or voltage and current sensing.

Organization	Yes or No	Question 4 Comment
Response: Thank you for your comments. 1. This cited reference in the proposed Standard is present to maintain consistent evidence that maintenance was performed within prescribed intervals. 2. The SDT agrees. 3. Thank you, the change has been made 4. The commenter is correct that it is the prime mover that is protected by the Reverse Power relay, however the Standard considers relays (such as Reverse Power relays) that sense voltage and current as within the scope. Furthermore, Part 4.2.5.1 of the Standard states that Protection Systems for generator Facilities that are part of the BES including Protection Systems that act to trip the generator either directly or via generator lockout or auxiliary tripping relays 5. The column marked Component of Protection System closely aligns with the definition of Protection System as approved by the NERC Board of Trustees and is included within the Standard itself. The next column ("Includes") is more explanatory in nature and is intended to give insight on the SDT intent 6. Thank you, the changes have been made. Additional Q&A have been added to Section 9.2.		
Xcel Energy	Yes	1) On page 65, paragraph 4, of the "Supplemental reference and FAQ" document, it states:"the type of test equipment used to establish the baseline must be used for any future trending of the cells internal ohmic measurements because of variances in test equipment and the type of ohmic measurement used by different manufacturer's equipment." While we understand the importance of creating a baseline, it is not feasible to expect the test equipment be the same as the manufacturer's test equipment or even the same test equipment over the life of the battery. The expected life of a battery may be in excess of 20 years and it is not feasible to expect that the type of test equipment will not change during this period.2) A FAQ to clarify in scope protection systems for variable energy resource facilities (wind, solar, etc) would be very helpful. 2) Does paragraph 4.2.5.3 "Facilities" imply that the only protection system associated with a wind farm that is considered in scope for PRC-005-2 is that for the aggregating transformer? If other protection systems associated with a wind farm are in scope, please clarify which systems would be in scope for PRC-005-2. For example, a typical wind farm in our system might have 30-33, 1.5MVA windmills connected to one 34.5 KV collecting feeder circuit for a total of roughly 50 MVA per collecting feeder. 4 of these 50 MVA collecting feeders are tied via circuit breakers to a low side 34.5 KV bus which in turn is connected via a low side breaker to aggregating step up transformer which then connects to the BES transmission system. Obviously per paragraph 4.2.5.3, the protection system for the aggregating step up transformer is in scope. What about the protection system for the transformer low side 34.5 KV breaker - serving 200 MVA of aggregate generation? What about the protection system of each individual 34.5 KV aggregating

Organization	Yes or No	Question 4 Comment
		feeder - 50 MVA of aggregate generation? What about the"protection system" for each individual 1.5 MVA windmill? An FAQ on this topic would be very helpful.
Response: Thank you for your comments. 1. Thank you for your suggestion; the paragraph cited has been changed. 2. Clause 4.2.5.3 states specifically that the Protection Systems on the aggregating transformer are included. The SDT has not specifically included other equipment, but, depending on what, specifically, is defined to be BES for these facilities, either within current Regional definitions or within the emerging NERC definition, other equipment may be drawn in.		
Alliant Energy	Yes	

5. If you have any other comments on this Standard that you have not already provided in response to the prior questions, please provide them here.

Summary Consideration: Several commenters were concerned that an entity has to be "perfect" in order to be compliant; the SDT responded that NERC Standards currently allow no provision for any degree of non-performance relative to the requirements.

Several commenters continued to insist that "grace periods" should be allowed. The SDT continued to respond that grace periods would not be measurable.

Several comments were offered, suggesting that PRC-005-2 needs to be consistent with the interpretation in Project 2009-17, now implemented as PRC-005-1a, and the SDT modified Applicability 4.2.1 for better consistency with the interpretation 4.2.1 (Protection Systems that are installed for the purpose of detecting faults on BES Elements (lines, buses, transformers, etc).

Many comments were offered objecting to the 3-calendar-month intervals for station dc supply and communications systems, and suggesting that a 3-calendar-month interval requires entities to schedule these activities for 2-calendar-months in order to assure compliance. The SDT did not modify the standard in response to these comments, and responded that the intervals were appropriate, and that entities should be able to assure compliance on a 3-calendar-month schedule by using program oversight. The "Supplementary Reference and FAQ" document was augmented with additional explanatory text.

Several comments were offered questioning various aspects of Applicability 4.2.5.4 (generation auxiliary transformers). No changes were made in response to these comments, and responses were offered illustrating why these transformers are included.

Many (essentially identical) comments were offered, questioning the propriety of including distribution system Protection Systems, almost all related to UFLS/UVLS. The SDT explained that these Protection Systems are appropriate to be included for consistency with legacy standards PRC-008, PRC-011, and PRC-017, and noted that their inclusion is consistent with Section 202 of the NERC Rules of Procedure.

Several comments were offered, objecting to the 6-calendar-year interval for lockout and auxiliary relays. The SDT declined to adopt the requested changes, and noted that these "electromechanical" devices with "moving parts" share failure mechanisms with electromechanical protective relays and that the intervals should be identical.

Several comments were offered regarding Maintenance Correctable Issues, and resulted in modifying this definition to be "…such that the deficiency cannot be corrected during the performance of the maintenance activity …"

Assorted additional comments were offered by individual commenters (most of them similar to comments on previous postings), which resulted in responses similar to those offered during previous posting periods.

Organization	Yes or No	Question 5 Comment
Consolidated Edison Co. of New York (1) (3) (5)	Ballot Comment - Affirmative	We recommend that the drafting team recognize that a "fail safe" or "self-reporting" alarm design serves as an acceptable alternative to periodic testing. This "fail safe" or "self-reporting" alarm design is equivalent to continuous testing the alarm. When the alarm circuit fails the alarm is set to "alarm on" and automatically notifies the control center, initiating a corrective action.
Response: Thank you for your comments. The application discussed seems to the SDT to be an effective method of "monitoring the monitoring circuit". (See Table 2, last row with heading "Alarm Path with monitoring.")		
Ameren Services (1)	Ballot Comment - Affirmative	(1) Need some tolerance – require 99% of components to meet R3. Measure M3 on page 5 should apply to 99% of the components. "Each … shall have evidence that it has implemented the Protection System Maintenance Program for 99% of its components and initiated…." PRC-005-2 unrealistically mandates perfection without providing technical justification. A basic premise of engineering is to allow for reasonable tolerances, even Six Sigma allows for defects. Requiring perfection may well harm reliability in that valuable resources will be distracted from other duties. (2) Define BES perimeter in accordance with Project 2009-17 Interpretation. Facilities Section 4.2.1 "or designed to provide protection for the BES" needs to be clarified so that it incorporates the latest Project 2009-17 interpretation. The industry has deliberated and reached a conclusion that provides a meaningful and appropriate border for the transmission Protection System; this needs to be acknowledged in PRC-005-2 and carried forward. The BOT adopted this 2/17/2011. (3) Battery inspection every 4 months is sufficient. IEEE battery maintenance standards call for quarterly inspections. These are targets, though, not maximums. An entity wishing to avoid non-compliance for an interval that might extend past three calendar months due to storms and outages must set a target interval of two months thereby increasing the number of inspections each year by half again. This is unnecessarily frequent. We suggest changing the maximum interval for battery inspections to 4 calendar months. For consistency, we also suggest that all intervals expressed as 3 calendar months be changed to 4 calendar months.
Response: Thank you for your comments. 1. The NERC criteria for VSLs do not currently permit them to allow some level of non-performance without being in violation. 2. The referenced interpretation relates to a quasi-definition of "transmission Protection System", and in the context of the approved PRC-004-1 and PRC-005-1, presents a consistent context for this term. However, the interpretation was constrained to not introducing any requirements or applicability not already included within the approved standards. PRC-005-2 does not use this term, and expands upon the applicability in the interpretation to address what seems to the SDT to be an appropriate applicability for PRC-005-2. The applicability of the interpretation to PRC-004-1 is not affected by PRC-005-2. 3. The activities involved in the 3-calendar-month maintenance intervals all relate to inspection-type activities of unmonitored battery systems. The SDT believes		

Organization	Yes or No	Question 5 Comment
that an entity may schedule activities for a 3-calendar-month interval without a "grace period" if adequate program oversight is exercised, and disagrees that the intervals should be extended. See Section 7.1 of the "PRC-005-2 Protection System Maintenance Supplementary Reference & FAQ" for a discussion about "calendar month". Basically every "3 Calendar Months" means to add 3 months from the last time the activity was performed.		
Xcel Energy		1) Regarding "Facilities" paragraph 4.2.5, we are in agreement with the elimination from scope of system connected station service transformers for those plants that are normally fed from a generator connected station service transformers. However, in the cases where a plant does not have a generator connected station service transformer such that it is normally fed from a system connected station service transformer, is it still the drafting team's intent to exclude the protection systems for these system connected auxiliary transformers from scope even when the loss of the normal (system connected) station service transformer will result in a trip of a BES generating facility? If the end result of the trip of the primary station service transformer is a trip of a BES generating facility, it would be more consistent to include the protection system for that transformer as in scope - whether it be connected to the system or to the generator. 2) We recommend the SDT consider an interval of 12 calendar years for the component in row 3, of Table 1-5 on page 19 of the standard. The maximum maintenance interval for "Electromechanical lockout and/or tripping devices which are directly in a trip path from the protective relay to the interrupting device trip coil" should be consistent with the "Unmonitored control circuit" interval which is 12 calendar years. In order to test the lockout relays, it may be necessary to take a bus outage (due to lack of redundancy and associated stability issues with delayed clearing). Increasing the frequency of bus outages (with associated lines or transformers) will also increase the amount of time that the BES is in a less intact system configuration. Increasing the time the BES is in a less intact system configuration also increases the probability of a low frequency, high impact event occurring. Therefore, the Maximum Maintenance Interval should be 12 years for lockout relays. We believe that, as written, the testing of "each" trip coil and the proposed maintenance interval for lockout testing will result in the increased amount of time that the BES is in a less intact system configuration. We hope that the SDT will consider these changes.
Response: Thank you for your comments. 1. The SDT does not intend that the system-connected station auxiliary transformers be included in the Applicability. The generator-connected station service transformers are often connected to the generator bus directly without an interposing breaker; thus, the Protection Systems on these transformers will trip the generator as discussed in 4.2.5.1. 2. The SDT believes that electromechanical devices share performance attributes (and failure modes) with electromechanical relays and need to be tested at similar intervals. Performance-Based maintenance is an option to increase the intervals if the performance of these devices supports those intervals.		
Northeast Power Coordinating Council, Inc. (10)	Ballot Comment -	A concern exists that an entity with a very strict PSMP with intervals that are much shorter than neighboring entities or the standard will rewrite their PSMP and loosen their requirements to allow postponed maintenance

Organization	Yes or No	Question 5 Comment
	Affirmative	up the maximum specified in the standard. This standard, as written penalizes non-adherence to more stringent and better PSMPs and may inadvertently driving entities to the least common denominator. I am hopeful that Phase 2 will address this issue.
Response: Thank you for your comments. The Standard is defining maximum allowable intervals and minimum acceptable activities for a PSMP. Entities are empowered to develop PSMPs that exceed these requirements if they determine such a PSMP to be necessary.		
GDS Associates		Requirement R1 1. Suggest changing the language in R1.2 to read "Identify which maintenance method such as the time-based, performance-based (detailed in PRC-005 Attachment A), or a combination of the two would be appropriate to be used for each type of Protection System component. Based upon their own constructive type, all batteries associated with the station DC supply shall be included in a time-based maintenance program consistent with Table 1-4(a) through Table 1-4(f)" 2. Suggest changing the language for the first paragraph in R1.3 to read "Establish the occurrences associated with the time-based maintenance programs up to but no less than the time intervals specified in Table 1-1 through Table 1-5, and Table 2. Consequently, include all applicable monitoring attributes and related maintenance activities characteristic to each type of Protection System component specified in Table 1-1 through Table 1-5, and Table 2" 3. Suggest adding a sub-requirement such as R1.5 to read "Include documentation of maintenance, testing interval and their basis and a summary of testing procedures" Requirement R3 4. The redline version of the standard is misleading. Requirement R3 is crossed out and then replacing requirement R7 which is also crossed out. 5. The wording "initiates resolution of any identified maintenance correctable issues" it is vague. What a responsible entity should do to become compliant with this requirement? We also believe that is not sufficient to just "initiate resolution"; the standard should call for corrective actions to be performed within the maintenance time interval. 6. The "identified maintenance correctable issues" may not be a proper choice. The name of the new term suggests that is about issues that can be corrected during maintenance, while the definition from the clean version explains otherwise?

Organization	Yes or No	Question 5 Comment
		Additional requirement 7. Suggest adding a requirement to read "The Transmission Owner, Generator Owner, and Distribution Provider shall provide documentation of its PSMP and implementation to the appropriate Regional Reliability Organizations on request (within 45 calendar days)." 8. Add measure for the evidence on documenting the PSMP from the additional requirement General comments and notes 9. If you own electro-mechanical relays and microprocessor based relays is there a need to keep two different logs for these? 10. On table 1-4 the generator CTs should be tested earlier than the suggested 12 years due to exposure of continuous mechanical stress 11. Clarify table 1-5 to address verification tests on different circuits. Suggest that the Table 1-5 to read "Complete a terminal test of unmonitored circuitry" instead of the "Unmonitored control circuitry associated with protective functions" 12. In what instances (what extent) would the standard allow using the real time breaker operation to be considered maintenance as applicable to different types of relays involved in the real time event? This is briefly emphasized under TBM at paragraph 5.1 from the supplementary reference document?

Response: Thank you for your comments.

1. It is not enough for an entity to determine if time-based, performance-based, or a combination of the two would be "appropriate"; the entity must specify which method is being used, so that it is clear to both the entity and an auditor if R2 and Attachment A apply.

2. The SDT has considered your comment and has determined that the text currently within the requirement is appropriate.

3. The requirement that you suggest is identical to one of the most troublesome requirements from the approved PRC-005-1. By providing Tables 1-1 through 1-5, as well as Table 2, the SDT is establishing maximum allowable intervals as well as minimum required activities, and thus replacing this PRC-005-1 requirement with a more prescriptive one. If an entity chooses to extend the intervals and alter the activities by using monitoring, or to apply performance-based maintenance per R2 and Attachment A, the additional requirements related to those choices effectively establish a requirement such as you suggest.

4. The red-lining tools in Microsoft Word can sometimes be misleading, but the red-line is provided in an effort to illustrate the changes made to the document. We recommend that the entity use the "clean" version in order to see the final resulting text.

5. The SDT has considered that, while some maintenance correctable issues may be completed very quickly, others may take an extended period (perhaps even several years) to complete effectively, during which time the degraded system must be reported and reflected within the operation of the BES in accordance with

Organization	Yes or No	Question 5 Comment
other standards. The SDT is concerned that the entity will not be able to record the maintenance activity as “complete” during the scheduled interval for these more extended activities to “correct the maintenance correctable issue”; therefore, the SDT has opted to require only that the entity initiate correction of maintenance correctable issues within PRC-005-2 and rely on the operating focus on the degraded system to ensure that they are completed. The associated measure provides examples of relevant documentation. The definition of maintenance correctable issue has been revised to be clearer. 6. The phrase from the entire sentence states “initiate resolution of any identified maintenance correctable issues”. This is to ensure follow-up for items which cannot be corrected during maintenance. The definition of maintenance correctable issue has been revised to be clearer. 7. No direct BES reliability purpose is supported by “on request documentation of a program”; this has value only for monitoring compliance. Additionally, Compliance Enforcement Authorities are empowered by the NERC Rules of Procedure to request information demonstrating compliance at any time. 8. No additional measure is necessary, as the suggested requirement is unnecessary. 9. The SDT is not specifying how the maintenance records are maintained relative to the Standard. It is up to the entity to determine how to best document the detailed implementation of their program. 10. Instrument transformers are addressed in Table 1-3, not Table 1-4. Entities are allowed to maintain components more frequently than required within the Standard if they feel it necessary. 11. The SDT does not believe that the suggested text adds clarity to the standard. Please see Section 15.3 of the Supplementary Reference Document for additional discussion. 12. The SDT suggests that observed in-service performance may be usable for any activities that are clearly verified by the in-service performance.		
Liberty Electric Power LLC		Apologies to the drafting team for submitting this with the ballot, repeated here to insure the comments are captured and addressed. While the SDT has done a very good job at responding to the most objectionable parts of the previous version, there are still a number of issues which makes the standard problematic. 1. The standard introduces the term "initiate resolution". This is an interpretable term, and has the potential for an auditor and an entity to disagree on an action. Would issuing a work order be considered "initiating resolution"? What if the WO had a completion date many years into the future? I would suggest adding the term to the list of definitions which will remain with the standard, and defining it as "performing any task associated with conducting maintenance activities, including but not limited to issuing purchase orders, soliciting bids, scheduling tasks, issuing work requests, and performing studies". 2. Some clarity is needed to differentiate system connected and generator connected station service transformers. A statement that a station service transformer connected radially to the generator bus is considered a system connected transformer if the transformer cannot be used for service unless connected to the BES. 3. The "bookends" issue, brought up in the prior round of comments, still exists. Although the SDT rightly notes a CAN has been issued regarding bookends, the CAN covers the documentation for system

Organization	Yes or No	Question 5 Comment
		components that entities were required to self-certify to on June 18, 2007. PRC-005-2 adds additional components to the protection system scheme which were not part of that certification, and has the potential to put entities into violation space due to a lack of records for those components. The SDT should add to M3 a statement that entities may demonstrate compliance with the standard by demonstrating that required activities took place twice within the maximum maintenance interval -starting from the effective date of the standard - for all components not listed in PRC-005-1.
Response: Thank you for your comments. 1. The SDT believes that issuing a work order would satisfy this requirement. M3 presents several examples of relevant evidence. The SDT has considered that, while some maintenance correctable issues may be completed very quickly, others may take an extended period (perhaps even several years) to complete effectively, during which time the degraded system must be reported and reflected within the operation of the BES in accordance with other standards. The SDT is concerned that the entity will not be able to record the maintenance activity as "complete" during the scheduled interval for these more extended activities to "correct the maintenance correctable issue"; therefore, the SDT has opted to require only that the entity initiate correction of maintenance correctable issues and rely on the operating focus on the degraded system to ensure that they are completed. The definition of maintenance correctable issue has been revised to be clearer. 2. The generator-connected station service transformers are often connected to the generator bus directly without an interposing breaker; thus, the Protection Systems on these transformers will trip the generator as discussed in 4.2.5.1. System connected station service transformers were removed from the Applicability in a previous draft. 3. The Implementation Plan specifies that entities may implement PRC-005-2 incrementally throughout the intervals specified, and that they shall follow their existing program for components not yet implemented. The SDT believes that the "bookends" issue to which you refer is therefore addressed. Also, please see Compliance Process Bulletin 2011-001 for a discussion about data retention.		
Central Lincoln		As we stated two ballots ago, we continue to believe that IEEE battery standard quarterly maintenance was never intended to be performed at a maximum interval of three months. Instead, three months is a target value that might be extended due to emergency. We continue to support a maximum interval of four months for these activities.
Response: Thank you for your comments. The activities involved in the 3-calendar-month maintenance intervals all relate to inspection-type activities of unmonitored battery systems. The SDT believes that an entity may schedule activities for a 3-calendar-month interval without a "grace period" if adequate program oversight is exercised, and disagrees that the intervals should be extended. See Section 7.1 of the "PRC-005-2 Protection System Maintenance Supplementary Reference & FAQ" for a discussion about "calendar month". Basically every "3 Calendar Months" means to add 3 months from the last time the activity was performed.		
Tampa Electric Company		1. As written PRC-005-2 would have a very significant impact on Tampa Electric Company with very little reliability benefit. For the testing of the DC control circuits Tampa Electric would need to remove from

Organization	Yes or No	Question 5 Comment
		service each BES element (circuit, bus, transformer, breaker) and perform an R&C checkout somewhat equivalent to what Tampa Electric does for new construction. That process would have to be repeated no less often than every six years. The testing of DC control circuits to the level described / required in the proposed standard in an energized station is a very risky proposition. Even though an element can be taken out of service for testing, the DC control circuits are often interconnected for functions such as breaker failure, bus and transformer lockouts etc. It is very easy to accidentally trip other in service equipment while doing this testing. Another concern is getting outages on equipment to perform the proposed testing. 2. Tampa Electric believes that there is an unnecessary expansion of the scope of equipment covered by the proposed PRC-005-2 standard into the distribution system related to UVLS and UFLS. Currently, PRC-005-1 includes batteries, instrument transformers, DC control circuitry and communications in addition to the relays for BES protection systems. PRC-008 (UFLS) and PRC-011 (UVLS) are ambiguous as to whether non-relay components are included in those standards. The proposed PRC-005-2 includes the non-relay components into UFLS and UVLS. The problem is, for UFLS and UVLS, the non-relay components are mostly distribution class equipment; hence, the result of this version 2 standard will be inclusion of most distribution class protection system components into PRC-005-2. This is a huge expansion of the scope of equipment covered by the proposed standard with negligible benefit to BES reliability. 3. In addition, testing of protection systems on distribution circuits is difficult for distribution circuits that are radial in nature. In addition, non-relay protection components operate much more frequently on distribution circuits than on transmission Facilities due to more frequent failures due to trees, animals, lightning, traffic accidents, etc., and have much less of a need for testing since they are operationally tested. 4. As another comment, station service transformers are not BES Elements and should not be part of the Applicability - they are radial serving only load. 5. Tampa Electric's Energy Supply Department has the following comment / question regarding Data Retention: For Requirement R3 R2 and Requirement R4R3, the Transmission Owner, Generator Owner, and Distribution Provider shall each keep documentation of the two most recent performances of each distinct maintenance activity for the Protection System components, or all performances of each distinct maintenance activity for the Protection System component since or to the previous scheduled audit date, whichever is longer. If all of the data which the proposed PRC-005-2 standard requires to be collected is not be available or kept for the prescribed period of time, how does a registered entity comply with the required data retention?
Response: Thank you for your comments. 1. Entities must employ processes and training on how to best manage risk . Not performing DC control circuit verification of protection functions is a risk to the		

Organization	Yes or No	Question 5 Comment
reliability of the BES. 2. Section 202 of the NERC Rules of Procedure define "Reliability standard" as "a requirement to provide for reliable operation of the bulk power system …" The requirements regarding maintenance of Protection Systems for UFLS and UVLS directly support this definition. The SDT notes that several Table entries for components that are used only for UFLS or UVLS involve fewer activities and/or longer intervals than for other similar components for generic Protection Systems. 3. The requirements related to UFLS and UVLS, which are commonly applied on non-BES equipment, are less involved than those for other Protection System equipment in recognition of the observations by the commenter. 4. The generator-connected station service transformers are often connected to the generator bus directly without an interposing breaker; thus, the Protection Systems on these transformers will trip the generator as discussed in 4.2.5.1. System connected station service transformers were removed from the Applicability in a previous draft. 5. The stated data retention period is consistent with what auditors are expecting (per the SDT's experience), and is also consistent with Compliance Process Bulletins 2011-001 and 2009-05. The entity is urged to assure that data is retained as specified within the Standard.		
American Transmission Company, LLC		1. Change the text of Standard PRC-005-2 - Protection System Maintenance Table 1-5 on page 19, Row 1, Column 3 to: "Verify that a trip coil is able to operate the circuit breaker, interrupting device, or mitigating device." Or alternately, "Electrically operate each interrupting device every 6 years" Trip coils are designed to be energized no longer than the breaker opening time (3-5 cycles). They are robust devices that will successfully operate the breaker for 5,000-10,000 electrical operations. The most likely source of trip coil failure is the breaker operating mechanism binding, thereby preventing the breaker auxiliary stack from opening and keeping the trip coil energized for too long of a time period. Therefore, trip coil failure is a function of the breaker mechanism failure. Exercising the breakers and circuit switchers is an excellent practice. We would encourage language that would suggest this task be done every 2 years, not to exceed 3 years. Exercising the interrupting devices would help eliminate mechanism binding, reducing the chance that the trip coils are energized too long. The language as currently written in table 1-5 row 1 will also have the unintentional effect of changing an entities existing interrupting device maintenance interval (essentially driving interrupting device testing to a less than 6 year cycle). 2. Change the text of Standard PRC-005-2 -Protection System Maintenance Table 1-5 on page 19, Row 3, Column 2 to: "12 calendar years" The maximum maintenance interval for "Electromechanical lockout and/or tripping devices which are directly in a trip path from the protective relay to the interrupting device trip coil" should be consistent with the "Unmonitored control circuit" interval which is 12 calendar years. In order to test the lockout relays, it

Organization	Yes or No	Question 5 Comment
		may be necessary to take a bus outage (due to lack of redundancy and associated stability issues with delayed clearing). Increasing the frequency of bus outages (with associated lines or transformers) will also increase the amount of time that the BES is in a less intact system configuration. Increasing the time the BES is in a less intact system configuration also increases the probability of a low frequency, high impact event occurring. Therefore, the Maximum Maintenance Interval should be 12 years for lockout relays.ATC recognizes the substantial efforts and improvements to PRC-005-2 that have been made and appreciate the dedicated work of the SDT. We appreciate the removal of Requirement R1.5 and R4 and other clarifications from draft 3. 3. ATC's remaining concern for PRC-005-2 is with definition and timelines established in Table 1-5. ATC believes that, as written, the testing of "each" trip coil and the proposed maintenance interval for lockout testing will result in the increased amount of time that the BES is in a less intact system configuration. ATC hopes that the SDT will consider these changes.
Response: Thank you for your comments. 1. The SDT considers it important to verify that each breaker trip coil has indeed operated within the established intervals. While breakers may be operated much more frequently at times (and allow the entity to document these operations to address this activity), other breakers may not be called on to operate for many years. 2. The SDT believes that electromechanical devices share performance attributes (and failure modes) with electromechanical relays and need to be tested at similar intervals. Performance-Based maintenance is an option to increase the intervals if the performance of these devices supports those intervals. 3. The SDT believes that performing these maintenance activities will benefit the reliability of the BES.		
Tri-State G & T Association, Inc. (3)	Ballot Comment - Affirmative	1: Section A.4.2. They are referencing Protection Systems as if they are Facilities in the Applicability section. Facilities are BES Elements, but Protection Systems are not. That needs to be modified somehow. Perhaps the drafting team needs to add another category under Applicability entitled "Protection Systems" and then list which types are included. 2: Maintenance Correctable Issue - This definition seems to be more of a Maintenance Non-Correctable Issue since it can only be resolved by follow-up corrective action. Suggest changing the term. 3: Change Definitions as indicated below: Segment - Protection System components that are identical or share common elements. Consistent performance is expected across the entire population of a Segment. A Segment must contain at least sixty (60) individual components in order to be considered for inclusion in a performance-based PSMP Component -An individual piece of equipment included in the definition of a Protection System., Entities are allowed some latitude to designate their own definitions of a Component. An example of where the entity

Organization	Yes or No	Question 5 Comment
		has some discretion on determining what constitutes a single Component is the voltage and current sensing devices, where the entity may choose either to designate a full three-phase set of such devices or a single device as a single Component. 4: M1 - Why is the document necessary to be "current or updated?" Eliminate "or updated." 5: The Applicability section needs to be changed, regardless of whether it has been discussed before. Protection Systems are not Facilities.
Response: Thank you for your comments. 1. The standard template allows for two separate sections within Applicability, "Entities" and "Facilities". The listing under Facilities is describing the applicable facilities to which the Protection Systems are applied, clarified further to indicate that only the Protection Systems on those Facilities are relevant. 2. The definition of maintenance correctable issue has been revised to be clearer. Please see Section 4.1 of the Supplementary Reference Document for additional discussion. The revised definition is: **Maintenance Correctable Issue** – Failure of a component to operate within design parameters such that the deficiency cannot be corrected during the performance of the maintenance activity. Therefore this issue requires follow-up corrective action. 3. The SDT does not believe that your suggested changes add clarity. 4. M1 has been modified as you suggest. 5. The standard template allows for two separate sections within Applicability, "Entities" and "Facilities". The listing under Facilities is describing the applicable Facilities to which the Protection Systems are applied, clarified further to indicate that only the Protection Systems on those Facilities are relevant.		
Progress Energy		Comments on Draft Standard 1. Table 1-1, 2nd row, 2nd bullet: The comment "(see Table 2)" does not apply to this bullet, but applies to the first bullet. 2. Table 1-3, 2nd row: Need to add "(See Table 2)." Comments on Implementation Plan 1. Section 3a states that "The entity shall be at least 30% compliant on the first day of the first calendar quarter 2 calendar years following applicable regulatory approval" If regulatory approval occurs on January 31, 2012, does this mean that the entity has until December 31, 2014 to be 30% compliant? It might be beneficial to provide an example explaining "calendar year." Comments on Supplementary Reference

Organization	Yes or No	Question 5 Comment
		1. Table of Contents does not list Section 15.4 2. Page 54, last paragraph, last sentence: “advances that are may be coming” 3. Page 65, 5th paragraph: VLRA should be VRLA 4. Page 67, 4th paragraph, 4th sentence: “typically looking for on the plates” 5. Page 69, 4th paragraph, last sentence: “Grounds because to of the possible” 6. Page 69, 5th paragraph, 2nd sentence: “For example, to do I need” 7. Page 70 5th paragraph, 5th sentence: “A manufacturer of” 8. Page 70 5th paragraph, 6th sentence: “by a third manufacturer’s equipment” 9. Page 71, first line: “(impedance, conductance, and resistance)”

Response: Thank you for your comments.

Draft Standard Comments

1. The Table has been modified as you suggest.

2. The Table has been modified as you suggest.

Implementation Plan Comments

1. The Implementation Plan has been modified for clarity. For the cited example with regulatory approval on January 31, 2012, the entity must be 30% compliant on the first day of the first calendar quarter 24 months following regulatory approvals. Hence, the entity must be 30% compliant on April 1, 2014.

Supplemental Reference Document Comments

1. Changed per your suggestion.

2. Changed per your suggestion.

3. Changed per your suggestion.

4. Changed per your suggestion.

5. Changed per your suggestion.

6. Changed per your suggestion.

7. Changed per your suggestion.

Organization	Yes or No	Question 5 Comment
8. Changed per your suggestion. 9 Changed per your suggestion.		
Dominion Virginia Power		Comments: IEEE battery maintenance standards call for quarterly inspections. These are targets, though, not maximums. An entity wishing to avoid non-compliance for an interval that might extend past three calendar months must implement a policy of two months with one month of grace period thereby increasing the number of inspections each year by half again. This is unnecessarily frequent. We suggest changing the maximum interval for battery inspections to 4 calendar months. For consistency, Dominion suggests that all battery maintenance intervals expressed as 3 calendar months be changed to 4 calendar months.
Response: Thank you for your comments. The activities involved in the 3-calendar-month maintenance intervals all relate to inspection-type activities of unmonitored battery systems. The SDT believes that an entity may schedule activities for a 3-calendar-month interval without a "grace period" if adequate program oversight is exercised, and disagrees that the intervals should be extended. See Section 7.1 of the "PRC-005-2 Protection System Maintenance Supplementary Reference & FAQ" for a discussion about "calendar month". Basically every "3 Calendar Months" means to add 3 months from the last time the activity was performed.		
Santee Cooper		Comments: 1. Santee Cooper does not agree with the expansion of the UFLS and UVLS requirements to include the dc supply. We understand that, in the previous consideration of comments, it is stated that "For UFLS and UVLS, the maintenance activities related to station dc supply and control circuitry are somewhat constrained relative to similar activities for Protection Systems in general." In the table, the requirement for dc supply for UFLS is to verify the station dc supply voltage when the control circuits are verified, which could be 6 or 12 years. It seems like the restraint shown in the requirement, if an indication of the level of need for the verification, is of a much longer timeframe than what would actually happen in the typical operation of a distribution system. Therefore, proof of this verification seems to be of minimal value compared to the extra documentation required due to this now being an auditable maintenance activity. 2. We also agree that maintenance activities with fast intervals, especially the 3 month ones, should be adjusted to 4 months to allow for the actual interval the entities use to be 3 months. Having the requirement at 3 months forces the utilities to schedule even faster (such as every month or 2 months) to ensure compliance.
Response: Thank you for your comments. 1. Section 202 of the NERC Rules of Procedure define "Reliability Standard" as "a requirement to provide for reliable operation of the bulk power system …" The requirements regarding maintenance of Protection Systems for UFLS and UVLS directly support this definition.		

Organization	Yes or No	Question 5 Comment
2. The activities involved in the 3-calendar-month maintenance intervals all relate to inspection-type activities of unmonitored battery systems. The SDT believes that an entity may schedule activities for a 3-calendar-month interval without a "grace period" if adequate program oversight is exercised, and disagrees that the intervals should be extended. See Section 7.1 of the "PRC-005-2 Protection System Maintenance Supplementary Reference & FAQ" for a discussion about "calendar month". Basically every "3 Calendar Months" means to add 3 months from the last time the activity was performed.		
The Detroit Edison Company		1. Countable Event - This definition should be clarified. As it stands, it appears that if a technician were to adjust the settings on an electromechanical relay - even if it were not outside of the entity's acceptable tolerance - it would need to be classified as a countable event. I would recommend that the definition be limited to repairing or replacing a failed component during the maintenance activity. These activities would address conditions that would potentially cause a Protection System misoperation (either a failure to trip or an unintentional trip). Routine maintenance activities to bring component test values back within tolerance should be excluded from the definition of a Countable Event. These activities are performed to keep the protection systems performance at its most ideal state. In addition, the definition as stated appears to classify battery maintenance activities such as cleaning corrosion, adding water, or applying an equalize charge, as countable events. If this is the intent, I disagree. These are activities that are expected to occur on a regular, routine basis due to the chemical properties of the battery (as described at length in the Supplementary Reference). As such, they should also not be classified as countable events. 2. Table 1-1 and Table 1-5 Based on experience with DECo equipment, a 6 year interval for testing monitored relays and performing tests on the breaker trip coil is substantially shorter than required. Currently, the interval for both is 10 years. This interval lines up both with the Transmission Owner's interval for relay maintenance as well as the maintenance interval for the associated current interrupting devices. I would recommend that these intervals be extended, at minimum, back to the 7 year interval proposed in Draft 2 - if not longer. 3. Table 1-4 (a, b, c, e) - Station dc supply using any type of battery recommend that the maintenance activity to "Verify: Station dc supply voltage" be clarified to state that the voltage should be measured at the positive and negative battery terminals. Until you get to page 72 of the Supplementary Reference, you do not know if this means to check the battery voltage or the bus voltage. The "Station dc supply" could refer to the entire dc system. It needs to be made clear in the table that you are referring to the battery. 4. Also, I noticed that there is no longer a requirement to measure individual cell voltages. I was wondering if you could explain the rationale behind that. Checking for voltages that are out of specification in individual cells helps to identify weak cells that may need to be replaced, if corrective action taken on them does not improve their condition. Individual cell voltage readings, along with ohmic readings, have been an industry standard that I believe many, if not most, companies adhere to. 5. Table 1-4 (a, b, c, d)I recommend eliminating the 3 month requirement. We have found annual inspections to be sufficient in catching problems early enough to take corrective action. Page 30 of the Supplementary

Organization	Yes or No	Question 5 Comment
		Reference states that the SDT believes that routine monthly inspections are the norm. While this may be the case at manned stations, it is not at unmanned stations. The amount of paperwork that would be required to demonstrate compliance is overwhelming and would be an immense burden. I have seen your suggestion in past draft comments of the same nature that if we don't want to do the 3 month inspections, then we should utilize more advanced monitoring. This is not something that can be implemented in a short time frame. It would take years to put all of that technology in place, and is rather cost prohibitive. Furthermore, some of the monitoring technologies that would enable you to forgo the 3 month requirement do not exist yet (to my knowledge). I recommend keeping with the 18 month requirement. If that seems too long, based on past experience I think a 12 month requirement would suffice. 6. Table 1-4 (c) I propose keeping the option to evaluate ohmic values to baseline. 7. Table 1-4 (a, b) For the requirement to evaluate the ohmic values to baseline, is a checkbox stating that you did this sufficient, or would a report/graph/etc listing the actual baseline and current value be required? 8. Table 1-4 (f) The first attribute is regarding high and low voltage monitoring and alarming of the battery charger voltage to detect charger overvoltage and charger failure. Would a low voltage alarm combined with high voltage shutdown (but not a high voltage alarm) meet this requirement? The high voltage shutdown will shut the charger down in a high voltage condition, and therefore result in a low voltage alarm, so the outcome is the same.

Response: Thank you for your comments.

1."Tweaking the settings" on a component that is not outside tolerances is not a Countable Event, which is partially defined as "A component which has failed and requires repair or replacement, any condition discovered during the verification maintenance activities in Tables 1-1 through 1-5 which requires corrective action …". However, as described in Clause 9.2 (Question 4) of the Supplementary Reference Document, a device which is outside tolerances should be considered to have experienced a "calibration failure" and thus has experienced a countable event.

2. If an entity's experience is that these components require less-frequent maintenance, a performance-based program in accordance with R2 and Attachment A is an option. The intervals were revised after Draft 3 such that the various intervals are multiples of each other, such that entities may establish a systematic PSMP.

3. Your observation that in section 15.4 of "PRC-005-2 Protection System Maintenance Supplementary Reference & FAQ" the SDT stated that "verification of dc supply voltage is simply an observation of battery voltage" is correct, but the SDT does not agree that the location where voltage should be measured (verified) be contained in PRC-005-2 or the Supplementary Reference document. Due to the variances in topography of dc control circuitry for Protection Systems, a single location for verification of dc supply voltage cannot be specified and must be determined by the Protection System owner.

4. As you correctly stated taking Individual cell voltage readings has been a standard that many companies adhere to. However, this maintenance activity was removed from the standard because it was a "how to requirement".

5. The activities involved in the 3-calendar-month maintenance intervals all relate to inspection-type activities of unmonitored battery systems. The SDT believes that an entity may schedule activities for a 3-calendar-month interval without a "grace period" if adequate program oversight is exercised, and disagrees that the

Organization	Yes or No	Question 5 Comment
intervals should be extended. See Section 7.1 of the "PRC-005-2 Protection System Maintenance Supplementary Reference & FAQ" for a discussion about "calendar month". Basically every "3 Calendar Months" means to add 3 months from the last time the activity was performed. 6. In section 15.4 of "PRC-005-2 Protection System Maintenance Supplementary Reference & FAQ" the SDT explains why in Table 1-4 (c) (Station dc supply using NiCad batteries) the option to evaluate ohmic values to baseline is not available. 7. The SDT believes that just providing "a checkbox stating that you did this" is sufficient proof. Section 15.4 of "PRC-005-2 Protection System Maintenance Supplementary Reference & FAQ" provides additional discussion on this topic. However, the SDT is unable to fully predict what evidence may be required by the Compliance Enforcement Authority to demonstrate compliance. 8. "A low voltage alarm combined with high voltage shutdown (but not a high voltage alarm)" would only partially meet the requirement. To ensure that the automatic shutdown of the battery charger for high voltage conditions is achieved, a high voltage alarm must be a component attribute of the monitoring system in order.		
Florida Keys Electric Cooperative Assoc. (1)	Ballot Comment - Negative	Extreme unreasonableness and undue hardships on entities, specifically smaller entities. Just one example is "battery inspections". What is an inspection - simply visual or cell readings? Some entities may have to assign full time battery maintenance duties. Can SCADA monitor DC voltage trends?
Response: Thank you for your comments. In section 15.4 of "PRC-005-2 Protection System Maintenance Supplementary Reference & FAQ" – that was provided for review and comment with PRC-005-2 – details what should be inspected for visual battery cells. The SDT disagrees that the PRC-005-2 with its accompanying Table 1 imposes "extreme unreasonableness and undue hardships on entities, specifically smaller entities" to maintain a reliable Protection Systems. Monitoring the dc voltages via SCADA is an option.		
FirstEnergy		FE offers the following additional comments and suggestions: We do not agree with the wording of requirement R3. The entity is only required to meet the minimum maintenance intervals of the standard as outlined in Tables 1 and 2. We offer a scenario where an entity states that they will go above the standard and maintain relays on a 4 year cycle. The standard, in meeting an adequate level of reliability, sates that this activity must be performed every 6 years. If the entity happened to miss the 4 year timeframe, deciding from a business standpoint to delay the maintenance to the 5th year, an auditor can find the entity non-compliant per the guidance and wording of the requirements in this standard. However, the entity still exceeded an adequate level of reliability by performing the maintenance within 5 years. This scenario would be very unfortunate to the entity that has essentially done their part in providing reliability to the bulk power system, yet they would be punished for not meeting their more stringent timeframes. This standard's guidance and requirements sends an adverse message to industry. It essentially punishes an entity for going above and beyond the standard except on a few rare occasions. If this were to happen, that entity, and possibly others, would not see the value in going above a standard. It would make entities meet the bare minimum requirements, essentially reducing overall system reliability. Therefore, we

Organization	Yes or No	Question 5 Comment
		suggest the following wording for requirement R3: "R3. Each Transmission Owner, Generator Owner, and Distribution Provider shall implement its PSMP to ensure adherence to the minimum requirements as outlined in Tables 1 and 2, and initiate resolution of any identified maintenance correctable issues."
Response: Thank you for your comments. The Standard requires an entity to implement a PSMP that meets the minimum requirements to the standard. An entity may choose to implement a program that exceeds the requirements.		
City of Farmington (3)	Ballot Comment - Affirmative	FEUS would like to thank the Drafting Team. The proposed PRC-005-2 standard is an improvement over the four standards that it will replace. However, section 4.2 identifies five types of protection systems that the standard is applicable to, but the language of Requirement 1 indicates that applicable entities need to establish a Protection System Maintenance Program (PSMP) for the Protection Systems designed to provide protection for BES Element(s) (Part 4.2.1 of Section 4.2). We believe the intent is to have a PSMP for all Protection Systems identified in Section 4.2 and that the language of Requirement 1 may cause confusion or be misleading. We suggest changing the language of Requirement 1 from: Each Transmission Owner, Generator Owner, and Distribution Provider shall establish a Protection System Maintenance Program (PSMP) for its Protection Systems designed to provide protection for BES Element(s). to: Each Transmission Owner, Generator Owner, and Distribution Provider shall establish a Protection System Maintenance Program (PSMP) for its Protection Systems identified in Section 4.2.
Response: Thank you for your comments. R1 has been modified as you suggest.		
FirstEnergy Energy Delivery FirstEnergy Solutions Ohio Edison Company (1) (3) (4) (5) (6)	Ballot Comment - Affirmative	FirstEnergy appreciates the efforts of the drafting team and supports PRC-005-2. We would also like the team to address our comments and suggestions submitted through the separate comment period.
Response: Thank you for your comments. Please see our responses to your comments submitted with the Formal Comments.		
ITC		1. For Battery System:- Table 1-4(a)o The maximum maintenance interval for the majority of the battery maintenance is listed at "18 calendar months". The current ITC Standard is"once per calendar year and a calendar year is defined as a twelve-month period beginning January 1st and ending December 31st ".

Organization	Yes or No	Question 5 Comment
		ITC would like the maximum maintenance interval at “once per calendar year” 2. Table 1-4(b) o VRLA (Valve Regulated Lead Acid) batteries have an additional inspection at 6 calendar months that includes inspecting the condition of all individual units by measuring the battery cell/unit internal ohmic values. This is in addition to the “18 calendar months” inspection. ITC would like to be consistent with the VLA (Vented Lead Acid) batteries and have only one internal ohmic value inspection once per calendar year. 3. For Battery System:- Table 1-4(a) o The maximum maintenance interval for the majority of the battery maintenance is listed at “18 calendar months”. The current ITC Standard is “once per calendar year and a calendar year is defined as a twelve-month period beginning January 1st and ending December 31st “. ITC would like the maximum maintenance interval at “once per calendar year” 4. Table 1-4(b) VRLA (Valve Regulated Lead Acid) batteries have an additional inspection at 6 calendar months that includes inspecting the condition of all individual units by measuring the battery cell/unit internal ohmic values. This is in addition to the ”18 calendar months” inspection. ITC would like to be consistent with the VLA (Vented Lead Acid) batteries and have only one internal ohmic value inspection once per calendar year. 5. Auxiliary Relays: ITC does not agree with the 6 year interval for Aux relays in the trip circuit. Although they are EM relays they are simple and have very few moving parts. We believe the maintenance period for auxiliary relays should be 12 years and they should be in conjunction with the control circuit. We recognize that Draft 4 only includes auxiliary relays that are directly in the trip path. That is an improvement in Draft 4. In general, auxiliary relays are very reliable; only certain relay types have been proven to be problematic. A known relay type (HEA) has been proven to be problematic if not exercised frequently. The standard should not require a 6 year interval period for all other auxiliary relays. We believe problematic relays should be addressed through use of a NERC Alert process. Don’t cut down the tree for a bad apple.

Response: Thank you for your comments.

1. In choosing the 18 calendar month interval for the maximum maintenance interval for the maintenance activities of table 1-4(a) the SDT was aware that the majority of these activities are recommended to be performed in IEEE 450 “Recommended Practice for Maintenance, Testing, and Replacement of Vented Lead-Acid Batteries for Stationary Applications “at the Yearly inspection. The SDT does not agree that “once per calendar year” would be a more appropriate interval for these activities but notes that entities may choose to perform required activities more frequently than the maximum intervals expressed in the Tables.

Organization	Yes or No	Question 5 Comment
2. In section 15.4 of "PRC-005-2 Protection System Maintenance Supplementary Reference & FAQ" – that was provided for review and comment with PRC-005-2 explaining why the for VRLA battery systems (Table 1-4(b)) the maximum maintenance intervals and maintenance activities cannot be consistent with the intervals and activities of VLA battery systems (Table 1-4(a)). 3. In choosing the 18 calendar month interval for the maximum maintenance interval for the maintenance activities of table 1-4(a) the SDT was aware that the majority of these activities are recommended to be performed in IEEE 450 "Recommended Practice for Maintenance, Testing, and Replacement of Vented Lead-Acid Batteries for Stationary Applications "at the Yearly inspection. However, the SDT has considered that IEEE 450 presents these activities as recommended activities in a vacuum, without considering other activities that are being performed at the 3-calendar-month interval and has established the 18-calendar-month interval to comport to the most aggressive intervals being used in common practice. The SDT does not agree that "once per calendar year" would be a more appropriate interval for these activities but notes that entities may choose to perform required activities more frequently than the maximum intervals expressed in the Tables. 4. Section 15.4 of "PRC-005-2 Protection System Maintenance Supplementary Reference & FAQ" (question – "What are cell/unit internal ohmic measurements "– that was provided for review and comment with PRC-005-2 – explains why the for VRLA battery systems (Table 1-4(b)) the maximum maintenance intervals and maintenance activities cannot be consistent with the intervals and activities of VLA battery systems (Table 1-4(a)). 5. The SDT believes that electromechanical devices share performance attributes (and failure modes) with electromechanical relays and need to be tested at similar intervals. Performance-Based maintenance is an option to increase the intervals if the performance of these devices supports those intervals. If an entities' experience is that these components require less-frequent maintenance, a performance-based program in accordance with R3 and Attachment A is an option.		
Manitoba Hydro		-Grace periods Grace periods should be permitted on the maintenance time intervals. While we understand that grace periods can be built into a PSMP, maintenance decisions that compromise reliability may still have to be made just to meet the specified time
Manitoba Hydro (1) (3) (5) (6)	Ballot Comment - Negative	Manitoba Hydro is voting negative for the following reasons: -Grace periods Grace periods should be permitted on the maintenance time intervals. While we understand that grace periods can be built into a PSMP, maintenance decisions that compromise reliability may still have to be made just to meet the specified time intervals and avoid penalty. An example of this would be removing a hydraulic generator from service at a time of low reserve to meet a maintenance interval and avoid non-compliance (removing an asset in a time of constraint). Grace periods are also required in the case of extreme weather conditions. Such conditions may make it unsafe to perform maintenance within the maintenance interval or may create a risk to reliability if the equipment being maintained is removed from service during these conditions. Utilities need to retain a reasonable amount of discretion and flexibility to make maintenance decisions that are best for reliability without risking non-compliance.
Response: Thank you for your comments. "Grace Periods" within the standard are not measurable, and would probably lead to persistently increasing intervals. However, an entity may establish an internal program with grace-period allowance, as long as the entire program (including grace periods) does not exceed the		

Organization	Yes or No	Question 5 Comment
intervals within the standard.		
Georgia System Operations Corporation (3)	Ballot Comment	GSOC supports comments submitted by Georgia Transmission Corporation
Response: Thank you for your comments. Please see the SDT response to the comments submitted by Georgia Transmission Corporation.		
Electric Market Policy		IEEE battery maintenance standards call for quarterly inspections. These are targets, though, not maximums. An entity wishing to avoid non-compliance for an interval that might extend past three calendar months must implement a policy of two months with one month of grace period thereby increasing the number of inspections each year by half again. This is unnecessarily frequent. We suggest changing the maximum interval for battery inspections to 4 calendar months. For consistency, Dominion suggests that all battery maintenance intervals expressed as 3 calendar months be changed to 4 calendar months.
Response: Thank you for your comments. The activities involved in the 3-calendar-month maintenance intervals all relate to inspection-type activities of unmonitored battery systems. The SDT believes that an entity may schedule activities for a 3-calendar-month interval without a "grace period" if adequate program oversight is exercised, and disagrees that the intervals should be extended. See Section 7.1 of the "PRC-005-2 Protection System Maintenance Supplementary Reference & FAQ" for a discussion about "calendar month". Basically every "3 Calendar Months" means to add 3 months from the last time the activity was performed.		
Alliant Energy Corp. Services, Inc. (4)	Ballot Comment - Negative	1. If PRC-005-2 is going to incorporate PRC-008 (UFLS) and PRC-011 (UVLS) the Purpose needs to be revised to include Distribution Protection Systems designed to protect the BES. 2. We do not believe a distribution relaying system, designed to protect the distribution assets, that may open a transmission element (ie; breaker failure) should be considered part of the BES Protection System. R1 should add the following sentence "Distribution Protection Systems intended solely for the protection of distribution assets are not included as a BES Protection System, even if they may open a BES Element."
Response: Thank you for your comments. 1. Section 202 of the NERC Rules of Procedure define "Reliability standard" as "a requirement to provide for reliable operation of the bulk power system …" The requirements regarding maintenance of Protection Systems for UFLS and UVLS directly support this definition. UFLS and UVLS are described in the Applicability as being included within the Protection System addressed within the standard if they are applied per other NERC Standards. 2. Section 202 of the NERC Rules of Procedure define "Reliability standard" as "a requirement to provide for reliable operation of the bulk power system …" The requirement, as written, supports this.		

Organization	Yes or No	Question 5 Comment
Exelon		1. In response to Exelon's comments provided to drafts 1, 2, and 3 of PRC-005, the SDT did not explain why a conflict with an existing regulatory requirement is acceptable. The SDT previously responded that a conflict does not exist and that the removal of grace periods simply is there to comply with FERC Order directive 693. In response to draft 3 of PRC-005, the SDT stated that "If several different regulatory agencies have differing requirements for similar equipment, it seems that the entity must be compliant with the most stringent of the varying requirements. In the cited case, an entity may need to perform maintenance more frequently than specified within the requirements to assure that they are compliant." Again this does not explain why a conflict with an existing regulatory requirement is acceptable. This response does not answer or address dual regulation by the NRC and by the FERC. Specifically, the request has not been adequately considered for an allowance for NRC-licensed generating units to default to existing Operating License Technical Specification Surveillance Requirements if there is a maintenance interval that would force shutting down a unit prematurely or become non-compliant with PRC-005. Therefore, Exelon again requests that the SDT communicate with the NRC and with the FERC to ensure a conflict of dual regulation is not imposed on a nuclear generating unit without the necessary evaluation. In addition, the SDT still did not fully evaluate or address the concern related to the uniqueness of nuclear generating unit refueling outage schedules. 2. Although Exelon Nuclear agrees with the SDT that the maximum allowed battery capacity testing intervals of not to exceed 6 calendar years for vented lead acid or NiCad batteries (not to exceed 3 calendar years for VRLA batteries) could be integrated within the plant's routine 18 month to 2 year interval refueling outage schedule, the SDT has not considered that nuclear refueling outages may be extended past the 18 month to 2 year "normal" periodicity. There are some unique factors related to nuclear generating units that the SDT has not taken into consideration in that these units are typically online continuously between refueling outages without shutting down for any other required maintenance. Historically, generating units have at times extended planned refueling outage shutdown dates days and even weeks due to requests from transmission operations, fuel issues and electrical demand. Without the grace period exclusion currently allowed by existing maintenance programs, a nuclear plant will be forced to either extend outage duration to include testing on an every other refueling outage (i.e., every four years to ensure compliance for a typical boiling water reactor) or leave the testing on a six year periodicity with the vulnerability of a forced shut down simply to perform maintenance to meet the six year periodicity or a self report of non-compliance. To ensure compliance, the nuclear industry will be forced to schedule battery testing on a four year periodicity to ensure the six year periodicity is met, thus imposing a requirement on nuclear generating units that would not apply to other types of generating units. The SDT response to this question in draft 3 is that "(t)he 18-month (and shorter) interval activities are activities that can be completed without outages - primarily inspection-related activities. An entity may need to perform maintenance more frequently than specified within the requirements to assure that they are compliant." Respectfully Exelon requests that the SDT review and evaluate the concern.

Organization	Yes or No	Question 5 Comment
Response: Thank you for your comments. 1. It appears that the SDT's response was mis-understood. The SDT intended that the response be understood as" in order to be compliant with all requirements, regardless of the different agencies imposing those requirements, the entity will likely have to be compliant with the most stringent of the requirements". Regarding PRC-005-2, an entity must be compliant with the included requirements, even if they are more stringent than other regulatory requirements. 2. The SDT believes that the activities addressed in the comment can be integrated with the 18-24 month plant refueling outage. This may result in the activities being performed more frequently than specified.		
Entergy (3) Entergy Services, Inc. (6)	Ballot Comment - Negative	In Section 4.2, 'Facilities' add the following subsection 4.2.6: Protection Systems for generating units in extended forced outage or in inactive reserve status are excluded from the requirements of this standard. However, the required maintenance and testing of the Protection Systems at these units must be completed prior to connecting the units to the Bulk Electric System (BES). Reason for the above comment: The above units are not connected to the BES and therefore do not affect the reliability of the BES. However, to ensure the reliability of the BES, required maintenance and testing of the Protection Systems at these units must be completed prior to connecting them to the BES.
Response: Thank you for your comments. Please refer to Compliance Application Notice CAN-0011, footnote 5, which states, "The registered entity's Protection System maintenance and testing program is only applicable for Protection System devices in service …" The SDT believes that this guidance will remain durable for PRC-005-2.		
Entergy Services		In Section 4.2, "Facilities" add the following subsection 4.2.6: Protection Systems for generating units in extended forced outage or in inactive reserve status are excluded from the requirements of this standard. However, the required maintenance and testing of the Protection Systems at these units must be completed prior to connecting the units to the Bulk Electric System (BES). Reason for the above comment: The above units are not connected to the BES and therefore do not affect the reliability of the BES. However, to ensure the reliability of the BES, required maintenance and testing of the Protection Systems at these units must be completed prior to connecting them to the BES.
Response: Thank you for your comments. Please refer to Compliance Application Notice CAN-0011, footnote 5, which states, "The registered entity's Protection System maintenance and testing program is only applicable for Protection System devices in service …" The SDT believes that this guidance will remain durable for PRC-005-2.		
MRO's NERC Standards Review Subcommittee		In the checkbox for Requirement R3 please change the wording to read, "Maintenance Correctable Issue - Failure of a component to operate within design parameters such that it cannot be restored to functional order by repair or calibration during performance of the initiating on-site activity. Therefore this issue requires follow-

Organization	Yes or No	Question 5 Comment
		up corrective action."
Response: Thank you for your comments. The definition of maintenance correctable issue has been revised to be clearer: Maintenance Correctable Issue – Failure of a component to operate within design parameters such that the deficiency cannot be corrected during the performance of the maintenance activity. Therefore this issue requires follow-up corrective action.		
Bonneville Power Administration		1. In the header of Tables 1-1, 1-2, 1-3, and 1-5 there is a note that says "Table requirements apply to all components of Protection Systems except as noted." Since each table only applies to the specific component type shown in the header, we do not understand what this note means. The definition given for component only makes the note more confusing. Please clarify the note. 2. Additionally, BPA is voting no during this round due to an issue with the Applicability Section and Section 4.2. Once this issue is clarified, BPA would be in support of a yes vote. Issue: Section 4.2 Facilities lists 5 separate items that the standard is applicable for (4.2.1. - 4.2.5). However Requirement 1 uses language that only addresses one of the items (4.2.1). There is no language contained anywhere within any of the requirements in PRC-005-2 that apply to the types of protection systems described in Applicability Sections 4.2.2 - 4.2.5. Therefore, it could be argued that this leaves it open to interpretation as to whether UFLS/UVLS/SPS are addressed by R1.In the NOPR (Â¶ 105), FERC states that "the Requirements within a standard define what an entity must do to be compliant" Further, in Order 693 (Â¶ 253) FERC explicitly states that "compliance will in all cases be measured by determining whether a party met or failed to meet the Requirement". Given this, then from a compliance perspective, the actual applicability of the standard appears to not be as broad as intended. We ask that this issue be resolved by modifying the language in R1 in a manner that explicitly encompasses all types of protection systems to which it is intended to be applied.
Response: Thank you for your comments. 1. In Table 1-1, for example, this note means that all activities apply to all protective relay components unless specifically differentiated within individual table entries. Because Tables 1-1, 1-2, and 1-3 do not include any additional differentiation within the table, the note was removed from these tables in consideration of your comment. 2. The R1 requirement has been revised in consideration of your comments.		
JEA (3)	Ballot Comment - Negative	JEA maintains testing of lockout relays will have major reliability impact to the JEA system.

Organization	Yes or No	Question 5 Comment
Response: Thank you for your comments. The SDT believes that electromechanical devices share performance attributes (and failure modes) with electromechanical relays and need to be tested at similar intervals. Performance-Based maintenance is an option to increase the intervals if the performance of these devices supports those intervals.		
Tri-State G&T		1. M1 - Why is the document necessary to be "current or updated?" Eliminate "or updated." 2. R1 VSL - Second item in Severe VSL is not addressed in any lower VSL. Should there also be a comparable violation in Lower and Moderate? 3. R2 VSL - Keep the comment about the redundancy in Lower VSL and High VSL for clarifying the difference between the two.
Response: Thank you for your comments. 1. M1 has been revised as suggested and the phrase, "or updated" has been removed 2. The VSL for R1 has been revised to add phased VSLs for Moderate and High related to this item. 3. The High VSL has been modified from three years to four years.		
Ameren		1. Measure M3 on page 5 should apply to 99% of the components. "Each __shall have evidence that it has implemented the Protection System Maintenance Program for 99% of its components and initiate" PRC-005-2 unrealistically mandates perfection without providing technical justification. A basic premise of engineering is to allow for reasonable tolerances, even Six Sigma allows for defects. Requiring perfection may well harm reliability in that valuable resources will be distracted from other duties. 2. Define BES perimeter in accordance with Project 2009-17 Interpretation. Facilities Section 4.2.1 "or designed to provide protection for the BES" needs to be clarified so that it incorporates the latest Project 2009-17 interpretation. The industry has deliberated and reached a conclusion that provides a meaningful and appropriate border for the transmission Protection System; this needs to be acknowledged in PRC-005-2 and carried forward. The BOT adopted this 2/17/2011. 3. Battery inspection every 4 months is sufficient. IEEE battery maintenance standards call for quarterly inspections. These are targets, though, not maximums. An entity wishing to avoid non-compliance for an interval that might extend past three calendar months due to storms and outages must set a target interval of two months thereby increasing the number of inspections each year by half again. This is unnecessarily frequent. We suggest changing the maximum interval for battery inspections to 4 calendar months. For consistency, we also suggest that all intervals expressed as 3 calendar months be changed to 4 calendar months.

Organization	Yes or No	Question 5 Comment
Response: Thank you for your comments. 1. The NERC criteria for VSLs do not currently permit them to allow some level of non-performance without being in violation. 2. The referenced interpretation relates to a quasi-definition of "transmission Protection System", and in the context of the approved PRC-004-1 and PRC-005-1, presents a consistent context for this term. However, the interpretation was constrained to not introduce any requirements or applicability not already included within the approved standards. PRC-005-2 does not use this term, and expands upon the applicability in the interpretation to address what seems to the SDT to be an appropriate applicability for PRC-005-2. The applicability of the interpretation to PRC-004 is not affected by PRC-005-2. 3. The activities involved in the 3-calendar-month maintenance intervals all relate to inspection-type activities of unmonitored battery systems. The SDT believes that an entity may schedule activities for a 3-calendar-month interval without a "grace period" if adequate program oversight is exercised, and disagrees that the intervals should be extended. See Section 7.1 of the "PRC-005-2 Protection System Maintenance Supplementary Reference & FAQ" for a discussion about "calendar month". Basically every "3 Calendar Months" means to add 3 months from the last time the activity was performed.		
Madison Gas and Electric Co. (4)	Ballot Comment - Affirmative	MGE is voting affirmative with the following recommendation to the definition of Maintenance Correctable Issue. Maintenance Correctable Issue - Failure of a component to operate within design parameters such that it cannot be restored to functional order by repair or calibration during performance of the "initiating" on-site activity. Therefore this issue requires follow-up corrective action. The removal of the word "initial" will cause less confusion because the industry does not understand if this is initial (commissioning) or is initial used as when a component requires repair. Recommend "initiating" replace "initial".
Response: Thank you for your comments. The definition of maintenance correctable issue has been revised to be clearer: Maintenance Correctable Issue – Failure of a component to operate within design parameters such that the deficiency cannot be corrected during the performance of the maintenance activity. Therefore this issue requires follow-up corrective action.		
Arizona Public Service Company		NERC continues to be too prescriptive in the standard. For example, Table 1-4(a) requires battery verifications and inspection every three months. We have been performing similar tests every four months for over a decade, with no adverse consequences. Although FERC Order 693 directs NERC to establish maximum allowable intervals, the maximum interval must be "appropriate to the type of protection system and its impact on the reliability of the Bulk-Power System." (Order 693 at 1475)The Standard Drafting Team (SDT) has not demonstrated a mechanism that connects the maximum maintenance interval with its impact on the reliability of the Bulk-Power System. An example can be found on the bottom of page 18 and the top of page 19 of the Consideration of Comments on Protection System Maintenance [Project 2007-17] for draft 3. Although the commenting organization provided a concrete example of successful maintenance under a longer interval, the Standards Drafting Team commented that it "believes that 18-months is the proper interval for this activity." (Emphasis added) An organization cannot challenge the SDT's beliefs, only facts. The basis for each maximum maintenance interval, with appropriate linkage to its impact on the reliability of the Bulk-

Organization	Yes or No	Question 5 Comment
		Power System, needs to be published and voted upon so that factual based proposals to modify the maximum interval can be rationally challenged.
Response: Thank you for your comments. The basis for the intervals established within the standard is described throughout the Supplementary Reference document.		
Northern Indiana Public Service Co. (3)	Ballot Comment - Negative	One of our concerns is that, while the present standard is 2 pages and is the most highly violated and fined standard, the new proposed standard is 22 pages, the implementation plan is 4 pages and the Supplemental FAQ document is 87 pages.
Response: Thank you for your comments. The SDT has established maximum allowable intervals in accordance with FERC Order 693. Additionally, the SDT has addressed many of the common program-related causes of observed violations, and has provided the Supplementary Reference and FAQ to assist entities in implementing their program.		
PJM Interconnection, L.L.C. (2)	Ballot Comment - Negative	PJM has a general problem with how this current draft defines "protection system". The issue is that PJM believes the standard should only apply to Protection relays that are designed to protect the BES. It should not apply to relays that protect the asset itself.
Response: Thank you for your comments. Section 202 of the NERC Rules of Procedure defines “Reliability Standard” as “a requirement to provide for reliable operation of the bulk power system …” The requirements as written directly support this definition.		
Western Area Power Administration		Please explain or clarify the term “mitigating devices” used in Table 1-5 Control Circuitry, Page 19. This term is not well defined in the industry and not easily understood as “interrupting device” or “circuit breaker.”
Response: Thank you for your comments. This term is primarily focused on Special Protection Systems, where they may perform some activity other than “interrupt” to address their design objectives.		
Shermco Industries		1. Please provide clarification on "Communications" in regards to the following: If our customers are utilizing Schweitzer SEL311 relays and utilizing the fiber for transfer trip, is this considered a communications circuit? Our experiences in regards to testing these devices that have transfer trips out into a main substation that could affect a main ring tie or open a major 138kV loop, are that the T&D utilities will not allow us to perform these tests and trip their breakers. Therefore, what is required to satisfy testing? 2. In regards to Function / Trip testing, if we have a sudden pressure device, this is considered an auxiliary relay and the sudden pressure relay itself is not required to be tested. However, the trip path is required to be tested for DC tripping, if it directly trips the breaker feeding the BES, on the DC Control verification

Organization	Yes or No	Question 5 Comment
		testing. Please clarify if this is correct.
Response: Thank you for your comments. 1. The fiber you indicate is a relay communications circuit. The SEL311 monitors the condition of the fiber. It will provide an alarm on loss of communications. If this alarm is not monitored then the entity will be required to check it every 3 months and verify it is still operational. If the communications alarm is brought back to the control center, and the error rate or pilot signal is verified continuously, the interval will be 12 years. 2. Yes, this is correct.		
ExxonMobil Research and Engineering		1. PRC-005-2 is a highly prescriptive standard that prevents small entities from establishing a risk-based approach to protective system maintenance that is commonly used in other industry sectors and forces the small entity to utilize the time-based program. Many registered entities do not have a population size of 60 for each type of protective device. However, they do possess historical records that can be used to calculate the mean time between failures for each equipment type that adequately reflects the service conditions in which the equipment is installed. The SDT should consider allowing registered entities to utilize historical records in their supporting documentation for defining a performance based program. 2. Additionally, by restricting populations by manufacturer model, as referenced in PRC-005-2 Attachment A, the Standard Drafting Team is bordering on anti-competitive behavior as those entities that utilize performance-based programs may be discouraged to utilize alternative suppliers because utilization of a time-based maintenance program on the alternative supplier's equipment may present a cost-benefit analysis hurdle that the supplier of the equipment is not able to overcome. 3. Lastly, the SDT has chosen not to provide a tolerance band for the maximum maintenance intervals it defines in its time-base program. Given that the SDT has not provided sound technical justification (i.e. a study, industry recommended practice, etc.), the SDT should reconsider its stance on providing a tolerance band on the time intervals specified in the time-based program. What is the increase in risk owned by an entity when a protective device is tested at the 6 year and 30 day mark instead of the 6 year mark?
Response: Thank you for your comments. 1. If the historical records fully address the criteria in Attachment A, they would be useful in establishing the basis for a performance-based maintenance program. If the population is not in accordance with the definition of segment in Attachment A, the SDT does not believe that the entity has a statistically-significant sample on which to base a PBM. 2. In order to properly apply a performance-based maintenance program, the components within a segment must be such that they will exhibit similar behavior. Similarly-functioning components from different manufacturers will likely not satisfy this criterion. If an entity does not have sufficient component populations to apply performance-based maintenance, they must revert to time-based maintenance per the Tables or find another entity with whom they can aggregate		

Organization	Yes or No	Question 5 Comment
components within a performance-based maintenance program. Please see Section 9 of the Supplementary Reference Document for a discussion regarding aggregating components between entities within a performance-based maintenance program. 3. There may be minimal additional risk for missing the required interval by only a small amount. However, “grace periods” within the standard are not measurable, and would probably lead to persistently increasing intervals. However, an entity may establish an internal program with grace-period allowance, as long as the entire program (including grace periods) does not exceed the intervals within the standard. Also, this concern is only a practical one if an entity is persistently maintaining its Protection System components at the very end of each maximum allowable interval.		
Luminant		The red-lined version did not appear to agree with the clean copy. In reading the "red lined" document it appears that R3 was intended to be "Each Transmission Owner, Generation Owner, and distribution Provider shall implement and follow its PSPM and initiate resolution of any identified maintenance correctable issues."
Response: Thank you for your comments. The red-lining tools in Microsoft Word can sometimes be misleading, but the red-line is provided in an effort to illustrate the changes made to the document. We recommend that the entity use the “clean” version in order to see the final resulting text.		
MidAmerican Energy Company		Requirement R3 of the standard discusses resolution of “identified maintenance correctable issues”. M3 requires evidence of “resolution of Maintenance Correctable Issues”. The definition of Maintenance Correctable Issue in the standard includes “during performance of the initial on-site activity”. The “initial on-site activity” seems to imply that the corrective steps that need to be tracked are those resulting from the periodic testing that is done for compliance with the standard. It is not clear if the SDT meant to require that records be kept of any required maintenance that is done as a result of a discovered problem or failure that is not identified during the periodic testing.
Response: Thank you for your comments. The SDT has considered that, while some maintenance correctable issues may be completed very quickly, others may take an extended period (perhaps even several years) to complete effectively, during which time the degraded system must be reported and reflected within the operation of the BES in accordance with other standards. The SDT is concerned that the entity will not be able to record the maintenance activity as “complete” during the scheduled interval for these more extended activities to “correct”; therefore, the SDT has opted to require only that the entity initiate correction of maintenance correctable issues and rely on the operating focus on the degraded system to ensure that they are completed. The definition of maintenance correctable issue has been revised, though, to be clearer. Maintenance Correctable Issue – Failure of a component to operate within design parameters such that the deficiency cannot be corrected during the performance of the maintenance activity. Therefore this issue requires follow-up corrective action.		
Consumers Energy (5)	Ballot Comment - Negative	While most of the changes are quite good, I believe R3 may not be what was intended. R3 concludes with "initiate resolution of any identified maintenance correctable issues." My copy of Webster's Dictonary defines initiate as "to set going : start". Thus to meet R3, I need never order a replacement component I just need to write a purchase order (it's the start of the process). If rewiring is needed, I only need to write a maintenance order, rather than sending out an electrician with tools and wire. I believe reliability would be better served to

Organization	Yes or No	Question 5 Comment
		require resolution of the problem rather than just starting a process to begin work.
Response: Thank you for your comments. The SDT has considered that, while some maintenance correctable issues may be completed very quickly, others may take an extended period (perhaps even several years) to complete effectively, during which time the degraded system must be reported and reflected within the operation of the BES in accordance with other standards. The SDT is concerned that the entity will not be able to record the maintenance activity as "complete" during the scheduled interval for these more extended activities to "correct"; therefore, the SDT has opted to require only that the entity initiate correction of maintenance correctable issues and rely on the operating focus on the degraded system to ensure that they are completed.		
Constellation Energy Commodities Group (6) Constellation Power Source Generation, Inc. (5)	Ballot Comment - Negative	1. R3 is vague and can be easily interpreted in a variety of ways. For example, "initiate resolution" may mean closing a work order on a correctable issue or it may mean simply to create a work order with the intent of closing it out. The difference is not just in compliance evidence but it potentially allows an auditor to interpret the requirement to state that closed work orders should be completed in a timely manner. 2. Lastly, the technical man power and compliance documentation needed to implement a performance based protection system maintenance program are so onerous that it is highly unlikely that any entity would use it."
Response: Thank you for your comments. 1. The SDT has considered that, while some maintenance correctable issues may be completed very quickly, others may take an extended period (perhaps even several years) to complete effectively, during which time the degraded system must be reported and reflected within the operation of the BES in accordance with other standards. The SDT is concerned that the entity will not be able to record the maintenance activity as "complete" during the scheduled interval for these more extended activities to "correct"; therefore, the SDT has opted to require only that the entity initiate correction of maintenance correctable issues and rely on the operating focus on the degraded system to ensure that they are completed. The definition of maintenance correctable issue has been revised to be clearer. Maintenance Correctable Issue – Failure of a component to operate within design parameters such that the deficiency cannot be corrected during the performance of the maintenance activity. Therefore this issue requires follow-up corrective action. 2. The SDT understands that the requirements to establish and operate a performance-based PSMP may be beyond what many entities will wish to pursue. However, these are provided for the use of those entities who wish to make use of the analytical resources to optimize their field maintenance.		
MISO Standards Collaborators		1. R3 speaks of a Maintenance Correctable Issue and implementing your Protection System Maintenance Program (PSMP). In the definition of Maintenance Correctable Issue, it states "...of the initial on-site activity". The intent seems to be that during any maintenance activity, and something is found not working properly, you should repair it. Some may look at the word "initial" as during the commissioning of a facility. We recommend the SDT delete the word "initial" to cause less confusion. 2. We recommend the SDT change the text of Standard PRC-005-2 - Protection System Maintenance Table

Organization	Yes or No	Question 5 Comment
		1-5 on page 19, Row 1, Column 3 to "Verify that each a trip coil is able to operate the circuit breaker, interrupting device, or mitigating device." Or alternately, "Electrically operate each interrupting device every 6 years." Trip coils are designed to be energized no longer than the breaker opening time (3-5 cycles). They are robust devices that will successfully operate the breaker for 5,000-10,000 electrical operations. The most likely source of trip coil failure is the breaker operating mechanism binding, thereby preventing the breaker auxiliary stack from opening and keeping the trip coil energized for too long of a time period. Therefore, trip coil failure is a function of the breaker mechanism failure. Exercising the breakers and circuit switchers is an excellent practice. We would encourage language that would suggest this task be done every 2 years, not to exceed 3 years. Exercising the interrupting devices would help eliminate mechanism binding, reducing the chance that the trip coils are energized too long. The language as currently written in Table 1-5, Row 1, will also have the unintentional effect of changing an entities existing interrupting device maintenance interval (essentially driving interrupting device testing to a less than 6 year cycle). 3. We recommend the SDT change the text of Standard PRC-005-2 - Protection System Maintenance Table 1-5 on page 19, Row 3, Column 2 to "12 calendar years". The maximum maintenance interval for "Electromechanical lockout and/or tripping devices which are directly in a trip path from the protective relay to the interrupting device trip coil" should be consistent with the "Unmonitored control circuit" interval which is 12 calendar years. 4. In order to test the lockout relays, it may be necessary to take a bus outage (due to lack of redundancy and associated stability issues with delayed clearing). Increasing the frequency of bus outages (with associated lines or transformers) will also increase the amount of time that the BES is in a less intact system configuration. Increasing the time the BES is in a less intact system configuration also increases the probability of a low frequency, high impact event occurring. Therefore, the Maximum Maintenance Interval should be 12 years for lockout relays. 5. We recognize the substantial efforts and improvements to PRC-005-2 that have been made and appreciate the dedicated work of the SDT. We appreciate the removal of Requirement R1.5 and R4 and other clarifications from draft 3. 6. Our remaining concern for PRC-005-2 is with definition and timelines established in Table 1-5. We believe that, as written, the testing of "each" trip coil and the proposed maintenance interval for lockout testing will result in the increased amount of time that the BES is in a less intact system configuration. We hope that

Organization	Yes or No	Question 5 Comment
		the SDT will consider these changes.
Response: Thank you for your comments. 1. The word, "initial" is intended to emphasize that an identified concern becomes a Maintenance Correctable Issue when the entity is not able to immediately resolve it, and must return to correct the problem. The definition of maintenance correctable issue has been revised to be clearer. Maintenance Correctable Issue – Failure of a component to operate within design parameters such that the deficiency cannot be corrected during the performance of the maintenance activity. Therefore this issue requires follow-up corrective action. 2. The SDT considers it important to verify each breaker trip coil will indeed operate within the established intervals. While breakers may be operated much more frequently at times (and allow the entity to document these operation to address this activity), other breakers may not be called on to operate for many years. 3. The SDT believes that electromechanical devices contain moving parts and share performance attributes (and failure modes) with electromechanical relays and need to be tested at similar intervals. Performance-Based maintenance is an option to increase the intervals if the performance of these devices supports those intervals. 4. The SDT believes that performing these maintenance activities will benefit the reliability of the BES. 5. Thank you. 6. The SDT believes that performing these maintenance activities will benefit the reliability of the BES.		
NERC - EA & I		Recommend entities be explicitly required to document the Relay Maintenance Program in one document. Many entities presently maintain their Protection Maintenance Program in several documents, such as one for relays, one for batteries, etc. This complicates compliance review and contributes to non-compliance since personnel in different departments writing these have different levels of understanding of NERC standards. Separate documents also allow inconsistencies to slip in. Recommend Requirement 1 to changed to the following to address this problem. "Each Transmission Owner, Generator Owner, and Distribution Provider shall establish a Protection System Maintenance Program (PSMP), RECORDED AND UPDATED AS A SINGLE DOCUMNET for its Protection Systems designed to provide protection for BES Element(s). "
Response: Thank you for your comments. The SDT believes that, because of the diversity of different entities and their business arrangements that such a requirement could serve to decrease the quality of an entity's PSMP, particularly for a vertically-integrated entity that includes several of the specified Applicable Entities. For example, the Generator Owner and Transmission Owner are likely to have significant differences for very good reasons.		
Florida Municipal Power Agency (4) (5) (6)	Ballot Comment - Negative	1. Section 4.2.1 states that the Standard is applicable to "Protections Systems designed to provide protection BES Elements." Section 15.1 of the Supplementary Reference Document defines the scope as those "devices that receive the input signal from the current and voltage sensing devices and are used to isolate a faulted element of the BES." These two statements are not exactly equivalent, and in fact, are in conflict

Organization	Yes or No	Question 5 Comment
Florida Municipal Power Pool (6)		with the Interpretation of PRC-004-1 and PRC-005-1 for Y-W Electric and Tri-State, Approved by the Board of Trustees on February 17, 2011. 2. Section 4.2.1 should be changed to "Any Protection System that is installed for the purpose of detecting faults on transmission elements (lines, buses, transformers, etc.) identified as being included in the Bulk Electric System (BES) and trips an interrupting device that interrupts current supplied directly from the BES."
Response: Thank you for your comments. 1. The referenced interpretation relates to a quasi-definition of "transmission Protection System", and in the context of the approved PRC-004-1 and PRC-005-1, presents a consistent context for this term. However, the interpretation was constrained to not introduce any requirements or applicability not already included within the approved standards. PRC-005-2 does not use this term, and expands upon the applicability in the interpretation to address what seems to the SDT to be an appropriate applicability for PRC-005-2. The applicability of the interpretation to PRC-004 is not affected by PRC-005-2. 2. Section 202 of the NERC Rules of Procedure defines "Reliability Standard" as "a requirement to provide for reliable operation of the bulk power system …" The requirements as written directly support this definition.		
US Army Corps of Engineers		1. Section 4.2.5.4 - please clarify generator connected station service transformer. We believe this to mean a station service transformer with no breaker between the transformer and the generator bus. 2. R3 - the term 'initiate resolution' is vague and needs to be further defined. Does this mean putting in a work order or is further action required. 3. Data Retention: The proposed standard clarifies that two of the most recent records of maintenance are to be retained to demonstrate compliance with the prescribed maintenance intervals. When equipment is replaced, the reference information indicates that the information associated with the original equipment must be retained to show compliance with the standard until the performance with the new equipment can be established. This is not explicitly stated in the requirements and warrants a comment.
Response: Thank you for your comments. 1. The commenter is correct. 2. The SDT has considered that, while some maintenance correctable issues may be completed very quickly, others may take an extended period (perhaps even several years) to complete effectively, during which time the degraded system must be reported and reflected within the operation of the BES in accordance with other standards. The SDT is concerned that the entity will not be able to record the maintenance activity as "complete" during the scheduled interval for these more extended activities to "correct"; therefore, the SDT has opted to require only that the entity initiate correction of maintenance correctable issues and rely on the operating focus on the degraded system to ensure that they are completed. The definition of maintenance correctable issue has been revised to be clearer. Maintenance Correctable Issue – Failure of a component to operate within design parameters such that the deficiency cannot be corrected during the		

Organization	Yes or No	Question 5 Comment
performance of the maintenance activity. Therefore this issue requires follow-up corrective action. 3. The data retention section is stated to describe what an entity must do to demonstrate compliance to an auditor on a persistent basis. The additional clarification in the Supplemental Reference Document is provided to share the experiences of SDT members with other entities, and to suggest a possible effective practice.		
Public Utility District No. 1 of Lewis County (5)	Ballot Comment - Negative	Standard does not recognize the affects and great burdens to smaller utilities that have limited staff and great distance to travel out west. Generally, our facilities to not affect the BES. We believe that the battery testing requirements are overkill. The intervals for testing should be placed at minimum of 2 or 3 years
Response: Thank you for your comments. The activities involved in the 3-calendar-month maintenance intervals all relate to inspection-type activities of unmonitored battery systems. The SDT believes that an entity may schedule activities for a 3-calendar-month interval without a "grace period" if adequate program oversight is exercised, and disagrees that the intervals should be extended. See Section 7.1 of the "PRC-005-2 Protection System Maintenance Supplementary Reference & FAQ" for a discussion about "calendar month". Basically every "3 Calendar Months" means to add 3 months from the last time the activity was performed. As for the other shorter-duration activities, the SDT believes that all of these activities, at the specified intervals, are necessary to assure reliability. From the experience of the SDT members, and as supported by various IEEE Standards, it seems clear that delaying the battery maintenance activities to 2-3 years would be detrimental to the reliability of the BES.		
AtCO Electric ltd		1. Table 1-2: the requirement for 12 calendar year verification for the channel and essential signals' performance should be removed. We do not see benefit in the maintenance activities under level 2 (the 12 calendar year requirement) and suggest merging it with level 3 (the "no periodic maintenance specified" requirement). The "loss of function" alarm, will be considered as a countable event to fall under requirement R3 and dealt as maintenance correctable issue. 2. Table 1-5: the requirement of 6 calendar year verification for electrical operation of electromechanical lockout and/or tripping auxiliary devices should be revisited, considering that: " It is not feasible to exercise a lockout relay during maintenance due to high risk to the in-service facility, as well as the complexity of lockout relay connections and protection schemes. Instead, we propose a DC ring test, which verifies the continuity of control circuitry and eliminates the risk impact of lockout or auxiliary tripping device operations." The interval is too frequent. The requirement would become achievable if the 6 calendar year frequency were increased to 12 calendar years, to be in line with microprocessor relay maintenance frequency
Response: Thank you for your comments. 1. Though a channel with continuous alarming may not be in an alarm state during a quiescent state, the alarm function alone does not identify if the channel will fail during fault conditions. Fault noise level and, fault location impact a channels' noise immunity margin. The activities are specified are to ensure reliable		

Organization	Yes or No	Question 5 Comment
performance of the communication channel. 2. The SDT believes that performing these maintenance activities will benefit the reliability of the BES.The SDT believes that electromechanical devices with moving parts share performance attributes (and failure modes) with electromechanical relays and need to be tested at similar intervals. Performance-Based maintenance is an option to increase the intervals if the performance of these devices supports those intervals.		
CPS Energy		1. Table 1-5 The new standard requires that every 6 years it is verified that "each trip coil is able to operate the breaker,". The supplementary reference states that this requirement can be met by tracking real-time fault-clearing operations on the circuit breakers. With transmission breakers typically having dual trip coils, how can tracking real-time operations meet this requirement? Would a breaker operations where relays in both the primary and secondary trip coils indicated operation be sufficient or would some type of trip coil monitoring that showed coil energization be needed? 2. Additionally, regarding the verification of all trip paths of the trip circuit. If a microprocessor relay is used to trip a breaker, and two contacts are paralleled on the relay through a single test switch for breaker tripping, would it be necessary to verify each contact independently or could an assertion of both contacts through the test switch be adequate? In this instance, the functionality of each contact would be fully identical. 3. Table 1-2A 3-month inspection is required for communications equipment that does not have "continuous monitoring or periodic automated testing for the presence of the channel function, and alarming for loss of function" has to be verified that the communication equipment is "functional" with a 3-month site visit. Would a carrier on-off system, that did not perform periodic check back testing, but did have an alarm contact (loss of power, failure, etc.) that was monitored through SCADA would need to have a 3-month inspection? According to the supplemental reference, this inspection should be to verify that the equipment is "operable through a cursory inspection and site visit". It sounds as if this cursory inspection and site visit would accomplish the same as the alarm contact. It does not appear that end-end functional testing of the blocking signal is required by what is provided in the supplemental reference. Is this correct? 4. Table 1-3 - The maintenance activity for the 12 calendar year testing should include a little more specificity. It should have something stating the values provided to the relay are accurate. I know that this discussed in the supplemental reference, but requirement in Table1-3 sounds as if any relay that measured for loss of signal, such as a loss-of-potential function, would be sufficient when the purpose to verify that the signal not only gets to the relay but also has some accuracy as needed by the application of the relay.
Response: Thank you for your comments. 1. If you are able to independently track both trip coils via real-time operations tracking, you could use this tracking to address this activity. If not, you will likely need to perform focused maintenance activities.		

Organization	Yes or No	Question 5 Comment
2. This would be adequate. 3. This is not correct. As you indicate, the 3 month check for unmonitored relay channels is to verify that the channel is functional. For a guard signal, a visual inspection will indicate if a guard or pilot signal is being received. A blocking channel can only be verified by either a checkback test or an end to end signal check. A visual check that the equipment is not failed does not indicate that the channel medium or auxiliary devices are still intact. We will revise the supplementary reference to clear this up (See Section 15.5.1, question "What is needed for the 3-month inspection of communications-assisted trip scheme equipment?"). 4. If the voltage and current signals are measured by the relay and verified to be correct, this would satisfy the required activity in the Table. Please note that, in the definition of Protection System Maintenance Program, "verify" means, "determine that the component is functioning correctly".		
NextEra Energy		Thank you for your diligent efforts in writing the draft standard. The draft standard and associated documents are well written and we believe, after approval, will be instrumental to improving the reliability of the BES. We have the following specific comments: a. The maximum maintenance interval of unmonitored Vented Lead-Acid (VLA) batteries should be changed from 3 calendar months to 12 calendar months. Today's lead-calcium and lead-selenium-low antimony batteries do not have rapid water loss as compared to the legacy lead-antimony batteries. FPL's operating experience has shown that electrolyte in today's VLA cells do not require watering within a 12-month interval. In fact, battery manufacturers now recommend watering intervals of 2 to 3 years for some new batteries. b. The maximum maintenance interval to verify that unmonitored communications systems are functional should be changed from 3 calendar months to 12 calendar months. FPL's operating experience has shown that power line carrier (PLC) failures are primarily due to PLC protective devices (MOVs, gas tubes & spark gaps). Automated testing such as PLC check-back schemes cannot test for failed PLC protective devices. We believe a 12 calendar month functional test is sufficient because of FPL's operating experience. FPL's operating experience has shown that power line carrier (PLC) failures are primarily due to PLC protective devices (MOVs, gas tubes & spark gaps). c. We believe the data retention requirements for R2 and R3 should be documentation for the two most recent maintenance activities. d. Regarding Maintenance Correctable Issue (page2) where it states: ".such that it cannot be restored to functional order during performance of the initial on-site activity". This terminology is vague: Particularly "initial on-site activity". Not sure what "functional order" means? The suggestion is to change to "..such that the deficiency cannot be restored to meet applicable acceptance criteria during the performance of the scheduled maintenance activity". e. Regarding Maintenance Correctable Issue (page 2) and R4 on Page 5, the suggestion is an entirely new "Maintenance Correctable" definition especially: "Therefore this issue requires followup corrective action".

Organization	Yes or No	Question 5 Comment
		Regarding this new definition: Why is it here? Is its purpose to ask us to do something with these issues if we discover them? Do issues identified as "Maint. Correctable" need to be tracked and reported in some manner? The referenced term "Maint. Correctable" is only used in PRC-005-2 in R4 (page 5). The suggestion is to provide clarification. Is this maintenance correctable terminology implying that NERC PRC005-2 is opening up a new requirement for tracking and reporting resolution of "Maint Correctable" issues? The suggestion is to change to: This issue includes any activity requiring further follow-up corrective action to restore operability outside of the applicable maint activity f. Regarding Countable Event (Page 3), the suggestion is an entirely new "Countable Event" definition. Why is this new term and definition "countable event" included in PRC-005-2 ? Note: In the PRC005-2 text "countable event" is actually only referred to in PRC-005-2 in Attachment A under "Performance Based Programs" (not referred to in time based programs section). The recommendation is that the PRC-005-2 version explicitly clarify the definition of â "countable event" to clearly indicate that this term is applicable ONLY to "Performance Based Programs". g. Regarding Countable Event (page 3), where the text says "Any failure of a component which requires repair or replacement, any condition discovered during the verification activities in Tables 1-1/1-5 which requires corrective action..", in the definition for "countable event" what does "corrective action" mean? PRC005-2 is unclear. Does the term "countable event" have any ties to"Maint Correctable" issues. The suggestion is to Consider changing wording from "corrective action" to "which requires > 7 days to correct" and clarify whether or not "countable event" has any correlation to "Maint Correctable" events as discussed on page 2 and in R4? If so please provide language clarifying this correlation.

Response: Thank you for your comments.

a. This activity is primarily inspection-related, and addresses an inspection of electrolyte levels, dc grounds, and station dc supply voltages. Good practice is that entities will conduct a visual inspection of the overall battery condition during these activities, although the Standard does not require it. Also, please note that, while some batteries may reliably go longer between "watering", this activity is to detect gross failures, rather than specifically to address "watering". Please see Section 15.4 of the Supplementary Reference Document for further discussion.

b. A relay communications channel and equipment provide logic for a pilot protective relay system to operate correctly to clear faults instantaneously. Channel failure would cause the protective system to not operate or to operate incorrectly. An unmonitored channel failure will decrease reliability of that protective system until its failure is discovered. One year is too long to risk BES protective systems out of service. The three month interval is devised to maintain BES system reliability. If an entity's experience suggests that longer intervals are appropriate, they may employ performance-based maintenance per R2 and Attachment A. The definition of maintenance correctable issue has been revised to be clearer.

c. From SDT members' experiences, it is clear that auditors will generally wish to monitor compliance all the way back to the previous audit. Please see

Organization	Yes or No	Question 5 Comment
Compliance Application Notice CAN-008 for a discussion about pre-2007 data. d. The definition has been modified in consideration of your comment. Maintenance Correctable Issue – Failure of a component to operate within design parameters such that the deficiency cannot be corrected during the performance of the maintenance activity. Therefore this issue requires follow-up corrective action. e. Yes – the entity is expected to do something in response to an identified Maintenance Correctable Issue, but it is left to the entity to determine the best method for them to track the initiation of resolution of Maintenance Correctable issues. The definition of maintenance correctable issue has been revised to be clearer.. Please refer to M3 for some sample types of evidence. f. Countable events are used only within Attachment A. g. “Countable Event” applies only to performance-based maintenance, and is used solely to determine and evaluate the PBM maintenance intervals. A countable event may (or may not) be a maintenance correctable issue, depending on whether the deficiency is corrected while performing the maintenance activity or requires additional follow-up.		
U.S. Bureau of Reclamation (5)	Ballot Comment - Affirmative	The application of the PSMP should be explicitly defined in the standard. Currently the PSMP is required to protect rather than a PSMP to identify the components defined by the standard. The language should be altered to ensure the PSMP is developed for the component types specified in the standard. The following language should be considered: "Each Transmission Owner, Generator Owner, and Distribution Provider shall establish a Protection System Maintenance Program (PSMP) for its Protection Systems identified in Section 4.2".
Response: Thank you for your comments. R1 has been modified as you suggest.		
NIPSCO		1. The present PRC-005 standard is 2 pages while the proposed PRC-005-2 is 22 pages, with an implementation plan of 4 pages and a supplemental document of 87 pages. The review process appears to be somewhat daunting especially considering that NERC is trying to simply things with such concepts as the “traffic ticket” approach. 2. In R3 we’re not sure if there is a time requirement regarding the completion of the resolution process. We like the use of "calendar year" in requirements which should provide flexibility in getting the work completed. 3. Another comment for our response concerns Table 1-2, Communications Systems (page 11):The first maintenance interval is 3 calendar months. Does this mean the same as 1 calendar quarter?1. Example for 3 calendar months: Maintenance performed on 1/4/11. Next maint due by 4/30/11. Maintenance performed on 4/12/11. Next maint due by 7/31/11. Maintenance performed on 7/30/11. Next maint due by

Organization	Yes or No	Question 5 Comment
		10/31/11. This would yield 3 inspections for 2011. Maintenance performed on 10/12/11. Next maint due by 1/31/12.2. Example for 1 calendar quarter: Maintenance performed on 1/4/11. Next maint due by 6/30/11. This would yield 4 inspections for 2011 (1 per quarter).
Response: Thank you for your comments. 1. The SDT has established maximum allowable intervals in accordance with FERC Order 693. Additionally, the SDT has addressed many of the common program-related causes of observed violations, and has provided the Supplementary Reference and FAQ to assist entities in implementing their program. The "traffic ticket" approach is focused on how the compliance monitor will assess violations, and has no bearing on the Standard itself. 2. The SDT has considered that, while some maintenance correctable issues may be completed very quickly, others may take an extended period (perhaps even several years) to complete effectively, during which time the degraded system must be reported and reflected within the operation of the BES in accordance with other standards. The SDT is concerned that the entity will not be able to record the maintenance activity as "complete" during the scheduled interval for these more extended activities to "correct"; therefore, the SDT has opted to require only that the entity initiate correction of maintenance correctable issues and rely on the operating focus on the degraded system to ensure that they are completed. 3. The intervals, "3 calendar months" and "once per calendar quarter" are not synonymous. "Once per calendar quarter" would effectively permit entities to have six months (less two days) between successive activities, while a "3 calendar month" interval limits an entity to four months (less two days) between activities. See Section 7.1 of the "PRC-005-2 Protection System Maintenance Supplementary Reference & FAQ" for a discussion about "calendar month" Basically every "3 Calendar Months" means to add 3 months from the last time the activity was performed.		
Tenaska, Inc. (5)	Ballot Comment - Negative	1. The biggest concern we have with the proposed standard is the inclusion of 4.2.5.4. As written it is not clear, but more importantly it is overly broad and provides little, if any, increase to reliability. It needs to be deleted. 2. In Section 4.2, five types of protection systems are identified as being applicable, but the language of Requirement 1 indicates that applicable entities need to establish a Protection System Maintenance Program (PSMP) for the Protection Systems designed to provide protection for BES Element(s) (Part 4.2.1 of Section 4.2). We believe the intent is to have a PSMP for all Protection Systems identified in Section 4.2 and that the language of Requirement 1 may cause confusion or be misleading. We suggest changing the language of Requirement 1 from: • Each Transmission Owner, Generator Owner, and Distribution Provider shall establish a Protection System Maintenance Program (PSMP) for its Protection Systems designed to provide protection for BES Element(s). to: • Each Transmission Owner, Generator Owner, and Distribution Provider shall establish a Protection

Organization	Yes or No	Question 5 Comment
		System Maintenance Program (PSMP) for its Protection Systems identified in Section 4.2.
Response: Thank you for your comments. 1. The generator-connected station service transformers are often connected to the generator bus directly without an interposing breaker; thus, the Protection Systems on these transformers will trip the generator as discussed in 4.2.5.1. 2. R1 of the standard has been modified as you suggest.		
Seattle City Light (1) (3) (4)	Ballot Comment - Negative	Seattle City Light (SCL) commends the Standard Drafting Team (SDT) for the many improvements in the latest draft of proposed standard PRC-005-2. The proposed PRC-005-2 standard is an improvement over the four standards that it will replace. Each draft has been better than that preceding, and the supporting material is very helpful in understanding the impact and implementation of the proposed Standard. However, SCL votes NO for this draft because of 1) the inclusion and treatment of electromechanical lockout relays within the scope of draft Standard and 2) 2) confusion about language between section 4.2 and Requirement 1. 1. Regarding electromechanical lockout relays, SCL is highly concerned about the reliability risks and logistical difficulties associated with meeting the requirements proposed for these relays. Lockout relays operate rarely and are known for reliable service. For many such relays, the proposed maintenance would require clearance of entire bus sections or even multiple bus sections (such as for a bus differential lockout relay). In SCL's opinion, the reliability risks posed by such switching and outages to the Bulk Electric System outweigh the reliability benefits of including lockout relays in the scope of PRC-005-2. If the SDT deems it necessary to include electromechanical lockout relays within PRC-005-2, SCL recommends that a difference be made between the maintenance activities specified for monitored and unmonitored types. The draft Standard describes the requirements for "electromechanical lockout and/or tripping auxiliary devices" in Table 1-5 (p.19) and assigns a 6-year maximum maintenance interval, the same as for other unmonitored relays. Modern electromechanical lockout relays may be specified with a built-in self-monitoring trip-coil alarm. SCL believes the maintenance requirements for electromechanical lockout relays with such an alarm should be similar to those for other alarmed or monitored relays. As such we recommend that a new entry be added to Table 1-5 for monitored electromechanical lockout relays, as follows:

Organization	Yes or No	Question 5 Comment
		• Component Attributes: Electromechanical lockout and/or tripping auxiliary devices which are directly in a trip path from the protective relay to the interrupting device trip coil AND include built-in self-monitoring trip-coil alarm • Maximum Maintenance Interval: 12 calendar years • Maintenance Activities: Verify electrical operation of electromechanical trip and auxiliary devices. Verify that the alarm path conveys alarm signals to a location where corrective action can be initiated. 2. We also would like to comment regarding confusion over language in section 4.2.This section identifies five types of Facilities that the standard is applicable to, whereas Requirement 1 indicates that applicable entities need to establish a Protection System Maintenance Program (PSMP) for the Protection Systems designed to provide protection for BES Element(s) (Part 4.2.1 of Section 4.2). As such, it is not clear if PRC-005-2 applies to five Facilities or to certain Protection Systems. SCL believes the intent is to have a PSMP for all Protection Systems identified in "Part A, Section 4.2 - Facilities" and that the language of Requirement 1 may cause confusion or be misleading. We suggest changing the language of Requirement 1 from: • Each Transmission Owner, Generator Owner, and Distribution Provider shall establish a Protection System Maintenance Program (PSMP) for its Protection Systems designed to provide protection for BES Element(s). to: • Each Transmission Owner, Generator Owner, and Distribution Provider shall establish a Protection System Maintenance Program (PSMP) for its Facilities identified in Part A, Section 4.2.
Response: Thank you for your comments. 1. The SDT believes that performing these maintenance activities will benefit the reliability of the BES. The SDT believes that electromechanical devices having moving parts share performance attributes (and failure modes) with electromechanical relays and need to be tested at similar intervals. Performance-Based maintenance is an option to increase the intervals if the performance of these devices supports those intervals. 2. R1 has been modified as you suggest.		
Seattle City Light (5) (6)	Ballot Comment - Negative	Seattle City Light (SCL) commends the Standard Drafting Team (SDT) for the many improvements in the latest draft of proposed standard PRC-005-2. The proposed PRC-005-2 standard is an improvement over the four standards that it will replace. Each draft has been better than that preceding, and the supporting material is very helpful in understanding the impact and implementation of the proposed Standard. However, SCL votes NO for this draft because of

Organization	Yes or No	Question 5 Comment
		1) the inclusion and treatment of electromechanical lockout relays within the scope of draft Standard and 2) confusion about language between section 4.2 and Requirement 1. 1. Regarding electromechanical lockout relays, SCL is highly concerned about the reliability risks and logistical difficulties associated with meeting the requirements proposed for these relays. Lockout relays operate rarely and are known for reliable service. For many such relays, the proposed maintenance would require clearance of entire bus sections or even multiple bus sections (such as for a bus differential lockout relay). In SCL's opinion, the reliability risks posed by such switching and outages to the Bulk Electric System outweigh the reliability benefits of including lockout relays in the scope of PRC-005-2. If the SDT deems it necessary to include electromechanical lockout relays within PRC-005-2, SCL recommends that a difference be made between the maintenance activities specified for monitored and unmonitored types. The draft Standard describes the requirements for "electromechanical lockout and/or tripping auxiliary devices" in Table 1-5 (p.19) and assigns a 6-year maximum maintenance interval, the same as for other unmonitored relays. Modern electromechanical lockout relays may be specified with a built-in self-monitoring trip-coil alarm. SCL believes the maintenance requirements for electromechanical lockout relays with such an alarm should be similar to those for other alarmed or monitored relays. As such we recommend that a new entry be added to Table 1-5 for monitored electromechanical lockout relays, as follows: • Component Attributes: Electromechanical lockout and/or tripping auxiliary devices which are directly in a trip path from the protective relay to the interrupting device trip coil AND include built-in self-monitoring trip-coil alarm o Maximum Maintenance Interval: 12 calendar years • Maintenance Activities: Verify electrical operation of electromechanical trip and auxiliary devices. Verify that the alarm path conveys alarm signals to a location where corrective action can be initiated. 2. Regarding confusion over language, section 4.2 section identifies five types of Facilities that the standard is applicable to, whereas Requirement 1 indicates that applicable entities need to establish a Protection System Maintenance Program (PSMP) for the Protection Systems designed to provide protection for BES Element(s) (Part 4.2.1 of Section 4.2). As such, it is not clear if PRC-005-2 applies to five Facilities or to certain Protection Systems. SCL believes the intent is to have a PSMP for all Protection Systems identified in "Part A, Section 4.2 - Facilities" and that the language of Requirement 1 may cause confusion or be misleading. We suggest changing the language of Requirement 1 from: • Each Transmission Owner, Generator Owner, and Distribution Provider shall establish a Protection

Organization	Yes or No	Question 5 Comment
		System Maintenance Program (PSMP) for its Protection Systems designed to provide protection for BES Element(s). to: • Each Transmission Owner, Generator Owner, and Distribution Provider shall establish a Protection System Maintenance Program (PSMP) for its Facilities identified in Part A, Section 4.2.
Response: Thank you for your comments. 1. The SDT believes that performing these maintenance activities will benefit the reliability of the BES. The SDT believes that electromechanical devices having moving parts share performance attributes (and failure modes) with electromechanical relays and need to be tested at similar intervals. Performance-Based maintenance is an option to increase the intervals if the performance of these devices supports those intervals. 2. R1 has been modified as you suggest.		
Colorado Springs Utilities (1)	Ballot Comment - Negative	The proposed PRC-005-2 standard is an improvement over the four standards that it will replace. However, section 4.2 identifies five types of protection systems that the standard is applicable to, but the language of Requirement 1 indicates that applicable entities need to establish a Protection System Maintenance Program (PSMP) for the Protection Systems designed to provide protection for BES Element(s) (Part 4.2.1 of Section 4.2). We believe the intent is to have a PSMP for all Protection Systems identified in Section 4.2 and that the language of Requirement 1 may cause confusion or be misleading. We suggest changing the language of Requirement 1 from: • Each Transmission Owner, Generator Owner, and Distribution Provider shall establish a Protection System Maintenance Program (PSMP) for its Protection Systems designed to provide protection for BES Element(s). to: • Each Transmission Owner, Generator Owner, and Distribution Provider shall establish a Protection System Maintenance Program (PSMP) for its Protection Systems identified in Section 4.2. Even with this change, the standard is still vague given the fact that there is no clear definition of "BES" or "Protective relay".
Response: Thank you for your comments. R1 has been modified as you suggest.		
Western Electricity Coordinating Council (10)	Ballot Comment - Affirmative	The proposed PRC-005-2 standard is an improvement over the four standards that it will replace. However, section 4.2 identifies five types of protection systems that the standard is applicable to, but the language of Requirement 1 indicates that applicable entities need to establish a Protection System Maintenance Program (PSMP) for the Protection Systems designed to provide protection for BES Element(s) (Part 4.2.1 of Section 4.2). We believe the intent is to have a PSMP for all Protection Systems identified in Section 4.2 and that the language of Requirement 1 may cause confusion or be misleading. To address the potential for confusion we

Organization	Yes or No	Question 5 Comment
		suggest changing the language of Requirement 1 from: • Each Transmission Owner, Generator Owner, and Distribution Provider shall establish a Protection System Maintenance Program (PSMP) for its Protection Systems designed to provide protection for BES Element(s). to: • Each Transmission Owner, Generator Owner, and Distribution Provider shall establish a Protection System Maintenance Program (PSMP) for its Protection Systems identified in Section 4.2.
Western Electricity Coordinating Council		The proposed PRC-005-2 standard is an improvement over the four standards that it will replace. However, section 4.2 identifies five types of protection systems that the standard is applicable to, but the language of Requirement 1 indicates that applicable entities need to establish a Protection System Maintenance Program (PSMP) for the Protection Systems designed to provide protection for BES Element(s) (Part 4.2.1 of Section 4.2). We believe the intent is to have a PSMP for all Protection Systems identified in Section 4.2 and that the language of Requirement 1 may cause confusion or be misleading. We suggest changing the language of Requirement 1 from: • Each Transmission Owner, Generator Owner, and Distribution Provider shall establish a Protection System Maintenance Program (PSMP) for its Protection Systems designed to provide protection for BES Element(s). to: • Each Transmission Owner, Generator Owner, and Distribution Provider shall establish a Protection System Maintenance Program (PSMP) for its Protection Systems identified in Section 4.2.
Response: Thank you for your comments. R1 has been modified as you suggest.		
California Energy Commission (9) Entegra Power Group, LLC (5)Idaho Power Company (1) NorthWestern Energy (1) Platte River Power Authority (1)	Ballot Comment – Affirmative (except for PUD of Grant County - Negative	The proposed PRC-005-2 standard is an improvement over the four standards that it will replace. However, section 4.2 identifies five types of protection systems that the standard is applicable to, but the language of Requirement 1 indicates that applicable entities need to establish a Protection System Maintenance Program (PSMP) for the Protection Systems designed to provide protection for BES Element(s) (Part 4.2.1 of Section 4.2). We believe the intent is to have a PSMP for all Protection Systems identified in Section 4.2 and that the language of Requirement 1 may cause confusion or be misleading. We suggest changing the language of Requirement 1 from: • Each Transmission Owner, Generator Owner, and Distribution Provider shall establish a Protection System Maintenance Program (PSMP) for its Protection Systems designed to provide protection for BES Element(s). to:

Organization	Yes or No	Question 5 Comment
(3) (6) Public Utility District No. 1 of Douglas County (4) Public Utility District No. 2 of Grant County (3) Utah Public Service Commission (9)		• Each Transmission Owner, Generator Owner, and Distribution Provider shall establish a Protection System Maintenance Program (PSMP) for its Protection Systems identified in Section 4.2.
Response: Thank you for your comments. The Standard has been modified as you suggest.		
Tucson Electric Power Co. (1)	Ballot Comment - Negative	The proposed PRC-005-2 standard is an improvement over the four standards that it will replace. However, section 4.2 identifies five types of protection systems that the standard is applicable to, but the language of Requirement 1 indicates that applicable entities need to establish a Protection System Maintenance Program (PSMP) for the Protection Systems designed to provide protection for BES Element(s) (Part 4.2.1 of Section 4.2). I believe the intent is to have a PSMP for all Protection Systems identified in Section 4.2 and that the language of Requirement 1 may cause confusion or be misleading. Suggest changing the language of Requirement 1 to: • Each Transmission Owner, Generator Owner, and Distribution Provider shall establish a Protection System Maintenance Program (PSMP) for its Protection Systems identified in Section 4.2.
Response: Thank you for your comments. The Standard has been modified as you suggest.		
Ingleside Cogeneration LP		The removal of R1.5 and R7 which required Protection System owners to identify and verify calibration tolerances or equivalent parameters upon conclusion of a maintenance activity was fundamental to Ingleside Cogeneration's yes vote. The amount of ambiguity introduced by the requirements and associated documentation did not serve to improve BES reliability in our view.
Response: Thank you for your comments.		
Transmission Access Policy		The scope of the equipment to which the draft standard applies is over-broad.

Organization	Yes or No	Question 5 Comment
Study Group		Specifically, PRC-005-2 should not apply to non-relay equipment for UFLS and UVLS systems. Subjecting UFLS and UVLS batteries, instrument transformers, DC control circuitry, and communications to the requirements of PRC-005-2 would drastically increase the scope of equipment covered by the standard, with no corresponding benefit to reliability, for the following reasons. In contrast to transmission and generation protection systems and SPSs, for which there are typically two protection systems per facility and therefore per fault, UFLS and UVLS deal with widespread events. For any under-voltage or under-frequency event, there are literally hundreds of UFLS/UVLS relays to respond. It is therefore far less critical if one UFLS or UVLS relay fails to operate properly. Furthermore, transmission is typically not radial (in fact, radials to load are excluded from the BES). But distribution circuits, where UFLS and UVLS systems are located, are usually radial. Testing some of the non-relay equipment to which the draft standard applies would require blacking out the customers served by that radial. In other words, the draft standard would require entities to definitely cause blackouts in an attempt to prevent very unlikely potential blackouts. This is plainly not justified from a harm/benefit perspective. Finally, many of the types of non-relay equipment to which the standard would apply are in effect tested by faults. Specifically, faults happen on distribution circuits (where UFLS and UVLS systems are located) more frequently than on transmission circuits, due to such things as animal contacts and car accidents. Any such fault is in fact a test of the all the equipment that is involved in clearing the fault. There is no need to require separate tests of that equipment, any more than we would require tests of a phone line that is used on an everyday basis; you already know that the phone works.
Response: Thank you for your comments. Section 202 of the NERC Rules of Procedure defines “Reliability Standard” as “a requirement to provide for reliable operation of the bulk power system …” The requirements regarding maintenance of Protection Systems for UFLS and UVLS directly support this definition.		
Illinois Municipal Electric Agency		The scope of the equipment to which the draft standard applies is still overly broad. Specifically, PRC-005-2 should not apply to non-relay equipment for UFLS and UVLS systems. Subjecting UFLS and UVLS batteries, instrument transformers, DC control circuitry, and communications to the requirements of PRC-005-2 would drastically increase the scope of equipment covered by the standard, with no corresponding benefit to reliability of the BES. This comment/recommendation is provided to address the resource and customer service interests of a TO and/or DP systems serving distribution load. Illinois Municipal Electric Agency supports comments submitted by the Transmission Access Policy Study Group.
Response: Thank you for your comments. Section 202 of the NERC Rules of Procedure define “Reliability standard” as “a requirement to provide for reliable operation of the bulk power system …” The requirements regarding maintenance of Protection Systems for UFLS and UVLS directly support this definition.		
ISO/RTO Standards Review		The SRC disagrees with the change to the term under 4.2.1. “Protection Systems designed to provide protection for BES elements.” We support keeping the previous version’s wording of 4.2.1. “Protection

Organization	Yes or No	Question 5 Comment
Committee		Systems applied on, or designed to provide protection for the BES." The revised wording expands the fundamental purpose of the NERC PRC-005 standard from being focused on ensuring relays intended to protect the reliability of the BES are maintained to a standard whose intent is to ensure all BES facilities have relay maintenance programs. Although we do not disagree with maintaining all relays, regardless of what their intended purposes are, it should not be the purpose of a NERC standard to police all protection schemes beyond those needed for interconnected reliability. There are numerous protective relays employed on facilities interconnected to the BES but their purpose may be for operating preference or service/equipment quality purposes such as reclosing schemes and transformer sudden pressure relays. We believe the NERC PRC-005 standard should be focused on maintenance of those protective relays which are needed to ensure that the loss of a single element does not cause cascading effects on the bulk power system.
Response: Thank you for your comments. Clause 4.2.1 has been modified to improve consistency with the Interpretation that has become part of PRC-005-1a.		
Duke Energy		The Standard Drafting Team has done an outstanding job on this standard. We are voting "Affirmative" but note that implementation questions remain, particularly with regards to classifying component attributes as "monitored," "unmonitored," "internal self diagnosis," "alarming," "alarming for excessive error" and "alarming for excessive performance degradation". The sheer size of the population of protective relays, communications systems, voltage and current sensing devices, batteries, and dc supply components means that the size of the effort required to categorize each individual component could drive us to test and maintain on the more frequent unmonitored time intervals, simply because of the difficulty in assembling "monitored" compliance documentation.
Response: Thank you for your comments. The opportunity to use "monitoring" to extend the intervals and reduce the activities, as well as the opportunity to use performance-based maintenance, is provided for those entities who wish to apply the administrative resources in order to minimize the field maintenance. If entities choose not to use those opportunities, the SDT believes that the un-monitored intervals and activities will establish an effective PSMP.		
Pepco Holdings Inc		There were numerous comments submitted for each of the previous drafts indicating that the 3 month interval for verifying unmonitored communication systems was much too short. The SDT declined to change the interval and in their response stated: "The 3 month intervals are for unmonitored equipment and are based on experience of the relaying industry represented by the SDT, the SPCTF and review of IEEE PSRC work. Relay communications using power line carrier or leased audio tone circuits are prone to channel failures and are proven to be less reliable than protective relays." Statistics on the causes of BES protective system misoperations, however, do not support this assertion. The PJM Relay Subcommittee has been tracking 230kV and above protective system misoperations on the PJM system for many years. For the six year period from 2002 to 2007, the number of protective system misoperations due to communication system problems was lower (and in many cases significantly lower) than those caused by defective relays, in every year but one. Similarly, RFC has conducted an analysis of BES protection system misoperations for 2008

Organization	Yes or No	Question 5 Comment
		and 2009, and found the number of misoperations caused by communication system problems to be in line with the number attributed to relay related problems. If unmonitored protective relays have a 6 year maximum maintenance/inspection interval, it does not seem reasonable to require the associated communication system to be inspected 24 times more frequently, particularly when relay failures are statistically more likely to cause protective system misoperations. As such, a 12 or 18 calendar month interval for inspection of unmonitored communication systems would seem to be more appropriate. FAQ II 6 B states that the concept should be that the entity verify that the communication equipment...is operable through a cursory inspection and site visit. However, unlike FSK schemes where channel integrity can easily be verified by the presence of a guard signal, ON-OFF carrier schemes would require a check-back or loop-back test be initiated to verify channel integrity. If the carrier set was not equipped with this feature, verification would require personnel to be dispatched to each terminal to perform these manual checks. The SDT responded that they still felt the 3 month interval as stated in the standard was appropriate. PHI respectfully requests that the SDT reconsider this issue and also cite what "specific statistical data" they used to validate that unmonitored communication systems are 24 times more prone to failure than unmonitored protective relays.
Response: Thank you for your comments. The SDT believes that relay communications channels are more susceptible to failure from an outside influence than a protective relay. Leased circuits from communications providers and carrier channels are highly exposed to lightning, automobiles, backhoes, etc. We believe the existing statistics from PJM and RFC on relay communications system based misoperation causes is due to the present practice of periodic channel verifications being performed. Many utilities presently use channel monitoring and carrier checkbacks to ensure reliable operation.		
Liberty Electric Power LLC (5)	Ballot Comment - Negative	While the SDT has done a very good job at responding to the most objectionable parts of the previous version, there are still a number of issues which makes the standard problematic. 1. The standard introduces the term "initiate resolution". This is an interpretable term, and has the potential for an auditor and an entity to disagree on an action. Would issuing a work order be considered "initiating resolution"? What if the WO had a completion date many years into the future? I would suggest adding the term to the list of definitions which will remain with the standard, and defining it as "performing any task associated with conducting maintenance activities, including but not limited to issuing purchase orders, soliciting bids, scheduling tasks, issuing work requests, and performing studies". 2. Some clarity is needed to differentiate system connected and generator connected station service transformers. A statement that a station service transformer connected radially to the generator bus is considered a system connected transformer if the transformer cannot be used for service unless connected to the BES. 3. The "bookends" issue, brought up in the prior round of comments, still exists. Although the SDT rightly notes a CAN has been issued regarding bookends, the CAN covers the documentation for system

Organization	Yes or No	Question 5 Comment
		components that entities were required to self-certify to on June 18, 2007. PRC-005-2 adds additional components to the protection system scheme which were not part of that certification, and has the potential to put entities into violation space due to a lack of records for those components. 4. The SDT should add to M3 a statement that entities may demonstrate compliance with the standard by demonstrating that required activities took place twice within the maximum maintenance interval -starting from the effective date of the standard - for all components not listed in PRC-005-1.
Response: Thank you for your comments. 1. The SDT believes that issuing a work order would satisfy this requirement. M3 presents several examples of relevant evidence. The SDT has considered that, while some maintenance correctable issues may be completed very quickly, others may take an extended period (perhaps even several years) to complete effectively, during which time the degraded system must be reported and reflected within the operation of the BES in accordance with other standards. The SDT is concerned that the entity will not be able to record the maintenance activity as "complete" during the scheduled interval for these more extended activities to "correct the maintenance correctable issue"; therefore, the SDT has opted to require only that the entity initiate correction of maintenance correctable issues and rely on the operating focus on the degraded system to ensure that they are completed. 2. The generator-connected station service transformers are often connected to the generator bus directly without an interposing breaker; thus, the Protection Systems on these transformers will trip the generator as discussed in 4.2.5.1. System connected station service transformers were removed from the Applicability in a previous draft. 3. The Implementation Plan specifies that entities may implement PRC-005-2 incrementally throughout the intervals specified, and that they shall follow their existing program for components not yet implemented. The SDT believes that the "bookends" issue to which you refer is therefore addressed. 4. The Standard requires that activities only take place once within the established interval.		
SPP reliability standard development Team		Would like more clarification in table 1-5 to address verification tests on different circuits. Is this an end to end test or partial test can you test one part of the circuit one way and another a different way? Should table 1-5 read Complete a terminal test of unmonitored circuitry?
Response: Thank you for your comments. The SDT does not believe that the suggested text adds clarity to the standard. Please see Section 15.3 of the Supplementary Reference Document for additional discussion.		
Lakeland Electric (1)	Ballot Comment - Negative	The new PRC-005-2 includes non-relay components into UFLS and UVLS. The problem is, for UFLS and UVLS, these non-relay components are mostly distribution class equipment; hence, the result of this version 2 standard will be inclusion of most distribution class protection system components into PRC-005-2. This is a huge expansion of the scope of equipment covered by the standard with negligible benefit to BES reliability. While Lakeland Electric agrees wholeheartedly with the inclusion of non-relay components for BES Protection Systems. It is critical that BES Protection Systems work and clear the fault (e.g., on > 100 kV Facilities).

Organization	Yes or No	Question 5 Comment
		However, UFLS and UVLS are quite different. For an event requiring UFLS and UVLS operation, there are many, e.g., hundreds and possibly thousands of relays, that operate to shed load automatically and if a small percentage of those do not operate as expected, the impact is minimal. So, it is not important for BES reliability to include non-relay components of UFLS and UVLS in the PRC-005-2 standard.
Response: Thank you for your comments. Section 202 of the NERC Rules of Procedure defines "Reliability Standard" as "a requirement to provide for reliable operation of the bulk power system …" The requirements regarding maintenance of Protection Systems for UFLS and UVLS directly support this definition.		
City of Bartow, Florida (3)	Ballot Comment - Negative	There is an unnecessary expansion of the scope of equipment covered by this standard into the distribution system related to UVLS and UFLS. Currently, PRC-005-1 includes batteries, instrument transformers, DC control circuitry and communications in addition to the relays for BES protection systems. PRC-008 (UFLS) and PRC-011 (UVLS) are ambiguous as to whether non-relay components are included in those standards. The new PRC-005-2 includes these non-relay components into UFLS and UVLS. The problem is, for UFLS and UVLS, these non-relay components are mostly distribution class equipment; hence, the result of this version 2 standard will be inclusion of most distribution class protection system components into PRC-005-2. This is a huge expansion of the scope of equipment covered by the standard with negligible benefit to BES reliability. We agree wholeheartedly with the inclusion of non-relay components for BES Protection Systems. It is critical that BES Protection Systems work and clear the fault (e.g., on > 100 kV Facilities). However, UFLS and UVLS are quite different. For an event requiring UFLS and UVLS operation, there are many, e.g., hundreds and possibly thousands of relays, that operate to shed load automatically and if a small percentage of those do not operate as expected, the impact is minimal. So, it is not important for BES reliability to include non-relay components of UFLS and UVLS in the PRC-005-2 standard. In addition, testing of protection systems on distribution circuits is difficult for distribution circuits that are radial in nature. For instance, testing trip coils of a distribution breakers will likely results in service interruption to customers on that distribution circuit in order to test the breaker or to perform break-before-make switching on the distribution system often required to manage maximum available fault current on the distribution system for worker safety, etc.. Hence, the standard would be sacrificing customer service quality for an infinitesimal increase in BES reliability. In addition, non-relay protection components operate much more frequently on distribution circuits than on transmission Facilities due to more frequent failures due to trees, animals, lightning, traffic accidents, etc., and have much less of a need for testing since they are operationally tested.
Response: Thank you for your comments. Section 202 of the NERC Rules of Procedure defines "Reliability Standard" as "a requirement to provide for reliable operation of the bulk power system …" The requirements regarding maintenance of Protection Systems for UFLS and UVLS directly support this definition.		
Lakeland Electric (6)	Ballot Comment -	Unnecessary expansion of the scope of equipment covered by this standard into the distribution system related to UVLS and UFLS. Currently, PRC-005-1 includes batteries, instrument transformers, DC control circuitry and communications in addition to the relays for BES protection systems. PRC-008 (UFLS) and

Organization	Yes or No	Question 5 Comment
	Negative	PRC-011 (UVLS) are ambiguous as to whether non-relay components are included in those standards. The new PRC-005-2 includes these non-relay components into UFLS and UVLS. The problem is, for UFLS and UVLS, these non-relay components are mostly distribution class equipment; hence, the result of this version 2 standard will be inclusion of most distribution class protection system components into PRC-005-2. This is a huge expansion of the scope of equipment covered by the standard with negligible benefit to BES reliability.
Response: Thank you for your comments. Section 202 of the NERC Rules of Procedure defines "Reliability Standard" as "a requirement to provide for reliable operation of the bulk power system …" The requirements regarding maintenance of Protection Systems for UFLS and UVLS directly support this definition.		
Beaches Energy Services (1)	Ballot Comment - Negative	We believe that there is an unnecessary expansion of the scope of equipment covered by this standard into the distribution system related to UVLS and UFLS. Currently, PRC-005-1 includes batteries, instrument transformers, DC control circuitry and communications in addition to the relays for BES protection systems. PRC-008 (UFLS) and PRC-011 (UVLS) are ambiguous as to whether non-relay components are included in those standards. The new PRC-005-2 includes these non-relay components into UFLS and UVLS. The problem is, for UFLS and UVLS, these non-relay components are mostly distribution class equipment; hence, the result of this version 2 standard will be inclusion of most distribution class protection system components into PRC-005-2. This is a huge expansion of the scope of equipment covered by the standard with negligible benefit to BES reliability. We agree wholeheartedly with the inclusion of non-relay components for BES Protection Systems. It is critical that BES Protection Systems work and clear the fault (e.g., on > 100 kV Facilities). However, UFLS and UVLS are quite different. For an event requiring UFLS and UVLS operation, there are many, e.g., hundreds and possibly thousands of relays, that operate to shed load automatically and if a small percentage of those do not operate as expected, the impact is minimal. So, it is not important for BES reliability to include non-relay components of UFLS and UVLS in the PRC-005-2 standard. In addition, testing of protection systems on distribution circuits is difficult for distribution circuits that are radial in nature. For instance, testing trip coils of distribution breakers will likely result in service interruption to customers on that distribution circuit in order to test the breaker or to perform break-before-make switching on the distribution system often required to manage maximum available fault current on the distribution system for worker safety, etc.. Hence, the standard would be sacrificing customer service quality for an infinitesimal increase in BES reliability. In addition, non-relay protection components operate much more frequently on distribution circuits than on Transmission Facilities due to more frequent failures due to trees, animals, lightning, traffic accidents, etc., and have much less of a need for testing since they are operationally tested.
Response: Thank you for your comments. Section 202 of the NERC Rules of Procedure defines "Reliability Standard" as "a requirement to provide for reliable operation of the bulk power system …" The requirements regarding maintenance of Protection Systems for UFLS and UVLS directly support this definition.		
Keys Energy Services (1)	Ballot Comment -	1. KEYS believes that there is an unnecessary expansion of the scope of equipment covered by this standard into the distribution system related to UVLS and UFLS. Currently, PRC-005-1 includes batteries, instrument

Organization	Yes or No	Question 5 Comment
	Negative	transformers, DC control circuitry and communications in addition to the relays for BES protection systems. PRC-008 (UFLS) and PRC-011 (UVLS) are ambiguous as to whether non-relay components are included in those standards. The new PRC-005-2 includes these non-relay components into UFLS and UVLS. The problem is, for UFLS and UVLS, these non-relay components are mostly distribution class equipment; hence, the result of this version 2 standard will be inclusion of most distribution class protection system components into PRC-005-2. This is a huge expansion of the scope of equipment covered by the standard with negligible benefit to BES reliability. KEYS agrees wholeheartedly with the inclusion of non-relay components for BES Protection Systems. It is critical that BES Protection Systems work and clear the fault (e.g., on > 100 kV Facilities). However, UFLS and UVLS are quite different. For an event requiring UFLS and UVLS operation, there are many, e.g., hundreds and possibly thousands of relays, that operate to shed load automatically and if a small percentage of those do not operate as expected, the impact is minimal. So, it is not important for BES reliability to include non-relay components of UFLS and UVLS in the PRC-005-2 standard. In addition, testing of protection systems on distribution circuits is difficult for distribution circuits that are radial in nature. For instance, testing trip coils of a distribution breakers will likely results in service interruption to customers on that distribution circuit in order to test the breaker or to perform break-before-make switching on the distribution system often required to manage maximum available fault current on the distribution system for worker safety, etc.. Hence, the standard would be sacrificing customer service quality for an infinitesimal increase in BES reliability. In addition, non-relay protection components operate much more frequently on distribution circuits than on transmission Facilities due to more frequent failures due to trees, animals, lightning, traffic accidents, etc., and have much less of a need for testing since they are operationally tested. 2. As another comment, station service transformers are not BES Elements and should not be part of the Applicability - they are radial serving only load.
Response: Thank you for your comments. 1. Section 202 of the NERC Rules of Procedure defines “Reliability Standard” as “a requirement to provide for reliable operation of the bulk power system …” The requirements regarding maintenance of Protection Systems for UFLS and UVLS directly support this definition. 2. The generator-connected station service transformers are often connected to the generator bus directly without an interposing breaker; thus, the Protection Systems on these transformers will trip the generator as discussed in 4.2.5.1. System connected station service transformers were removed from the Applicability in a previous draft.		
Lakeland Electric (3)	Ballot Comment - Negative	1. LAK believes that there is an unnecessary expansion of the scope of equipment covered by this standard into the distribution system related to UVLS and UFLS. Currently, PRC-005-1 includes batteries, instrument transformers, DC control circuitry and communications in addition to the relays for BES protection systems. PRC-008 (UFLS) and PRC-011 (UVLS) are ambiguous as to whether non-relay components are included

Organization	Yes or No	Question 5 Comment
		in those standards. The new PRC-005-2 includes these non-relay components into UFLS and UVLS. The problem is, for UFLS and UVLS, these non-relay components are mostly distribution class equipment; hence, the result of this version 2 standard will be inclusion of most distribution class protection system components into PRC-005-2. This is a huge expansion of the scope of equipment covered by the standard with negligible benefit to BES reliability. LAK agrees wholeheartedly with the inclusion of non-relay components for BES Protection Systems. It is critical that BES Protection Systems work and clear the fault (e.g., on > 100 kV Facilities). However, UFLS and UVLS are quite different. For an event requiring UFLS and UVLS operation, there are many, e.g., hundreds and possibly thousands of relays, that operate to shed load automatically and if a small percentage of those do not operate as expected, the impact is minimal. So, it is not important for BES reliability to include non-relay components of UFLS and UVLS in the PRC-005-2 standard. In addition, testing of protection systems on distribution circuits is difficult for distribution circuits that are radial in nature. For instance, testing trip coils of a distribution breakers will likely results in service interruption to customers on that distribution circuit in order to test the breaker or to perform break-before-make switching on the distribution system often required to manage maximum available fault current on the distribution system for worker safety, etc.. Hence, the standard would be sacrificing customer service quality for an infinitesimal increase in BES reliability. In addition, non-relay protection components operate much more frequently on distribution circuits than on transmission Facilities due to more frequent failures due to trees, animals, lightning, traffic accidents, etc., and have much less of a need for testing since they are operationally tested. 2. As another comment, station service transformers are not BES Elements and should not be part of the Applicability - they are radial serving only load.
Response: Thank you for your comments. 1. Section 202 of the NERC Rules of Procedure defines “Reliability Standard” as “a requirement to provide for reliable operation of the bulk power system …” The requirements regarding maintenance of Protection Systems for UFLS and UVLS directly support this definition. 2. The generator-connected station service transformers are often connected to the generator bus directly without an interposing breaker; thus, the Protection Systems on these transformers will trip the generator as discussed in 4.2.5.1. System connected station service transformers were removed from the Applicability in a previous draft.		
City of Green Cove Springs (3)	Ballot Comment - Negative	1. GCS believes that there is an unnecessary expansion of the scope of equipment covered by this standard into the distribution system related to UVLS and UFLS. Currently, PRC-005-1 includes batteries, instrument transformers, DC control circuitry and communications in addition to the relays for BES protection systems. PRC-008 (UFLS) and PRC-011 (UVLS) are ambiguous as to whether non-relay components are included in those standards. The new PRC-005-2 includes these non-relay components into UFLS and UVLS. The problem is, for UFLS and UVLS, these non-relay components are mostly distribution class equipment;

Organization	Yes or No	Question 5 Comment
		hence, the result of this version 2 standard will be inclusion of most distribution class protection system components into PRC-005-2. This is a huge expansion of the scope of equipment covered by the standard with negligible benefit to BES reliability. GCS agrees wholeheartedly with the inclusion of non-relay components for BES Protection Systems. It is critical that BES Protection Systems work and clear the fault (e.g., on > 100 kV Facilities). However, UFLS and UVLS are quite different. For an event requiring UFLS and UVLS operation, there are many, e.g., hundreds and possibly thousands of relays, that operate to shed load automatically and if a small percentage of those do not operate as expected, the impact is minimal. So, it is not important for BES reliability to include non-relay components of UFLS and UVLS in the PRC-005-2 standard. In addition, testing of protection systems on distribution circuits is difficult for distribution circuits that are radial in nature. For instance, testing trip coils of a distribution breakers will likely results in service interruption to customers on that distribution circuit in order to test the breaker or to perform break-before-make switching on the distribution system often required to manage maximum available fault current on the distribution system for worker safety, etc.. Hence, the standard would be sacrificing customer service quality for an infinitesimal increase in BES reliability. In addition, non-relay protection components operate much more frequently on distribution circuits than on transmission Facilities due to more frequent failures due to trees, animals, lightning, traffic accidents, etc., and have much less of a need for testing since they are operationally tested. 2. As another comment, station service transformers are not BES Elements and should not be part of the Applicability - they are radial serving only load.
Response: Thank you for your comments. 1. Section 202 of the NERC Rules of Procedure defines “Reliability Standard” as “a requirement to provide for reliable operation of the bulk power system …” The requirements regarding maintenance of Protection Systems for UFLS and UVLS directly support this definition. 2. The generator-connected station service transformers are often connected to the generator bus directly without an interposing breaker; thus, the Protection Systems on these transformers will trip the generator as discussed in 4.2.5.1. System connected station service transformers were removed from the Applicability in a previous draft.		
Gainesville Regional Utilities (1)	Ballot Comment - Negative	GRU (GVL) agrees with the following comments provided by the FMPA: 1. FMPA believes that there is an unnecessary expansion of the scope of equipment covered by this standard into the distribution system related to UVLS and UFLS. Currently, PRC-005-1 includes batteries, instrument transformers, DC control circuitry and communications in addition to the relays for BES protection systems. PRC-008 (UFLS) and PRC-011 (UVLS) are ambiguous as to whether non-relay components are included in those standards. The new PRC-005-2 includes these non-relay components into UFLS and UVLS. The problem is, for UFLS and UVLS, these non-relay components are mostly distribution class equipment; hence, the result of this version 2 standard will be inclusion of most distribution class protection system

Organization	Yes or No	Question 5 Comment
		components into PRC-005-2. This is a huge expansion of the scope of equipment covered by the standard with negligible benefit to BES reliability. FMPA agrees wholeheartedly with the inclusion of non-relay components for BES Protection Systems. It is critical that BES Protection Systems work and clear the fault (e.g., on > 100 kV Facilities). However, UFLS and UVLS are quite different. For an event requiring UFLS and UVLS operation, there are many, e.g., hundreds and possibly thousands of relays, that operate to shed load automatically and if a small percentage of those do not operate as expected, the impact is minimal. So, it is not important for BES reliability to include non-relay components of UFLS and UVLS in the PRC-005-2 standard. In addition, testing of protection systems on distribution circuits is difficult for distribution circuits that are radial in nature. For instance, testing trip coils of a distribution breakers will likely results in service interruption to customers on that distribution circuit in order to test the breaker or to perform break-before-make switching on the distribution system often required to manage maximum available fault current on the distribution system for worker safety, etc.. Hence, the standard would be sacrificing customer service quality for an infinitesimal increase in BES reliability. In addition, non-relay protection components operate much more frequently on distribution circuits than on transmission Facilities due to more frequent failures due to trees, animals, lightning, traffic accidents, etc., and have much less of a need for testing since they are operationally tested. 2. As another comment, station service transformers are not BES Elements and should not be part of the Applicability - they are radial serving only load.
Response: Thank you for your comments. 1. Section 202 of the NERC Rules of Procedure defines “Reliability Standard” as “a requirement to provide for reliable operation of the bulk power system …” The requirements regarding maintenance of Protection Systems for UFLS and UVLS directly support this definition. 2. The generator-connected station service transformers are often connected to the generator bus directly without an interposing breaker; thus, the Protection Systems on these transformers will trip the generator as discussed in 4.2.5.1. System connected station service transformers were removed from the Applicability in a previous draft.		
Alliant Energy		1. If PRC-005-2 is going to incorporate PRC-008 (UFLS) and PRC-011 (UVLS) the Purpose needs to be revised to include Distribution Protection Systems designed to protect the BES. 2. We do not believe a distribution relaying system, designed to protect the distribution assets, that may open a transmission element (ie; breaker failure) should be considered part of the BES Protection System. R1 should add the following sentence “Distribution Protection Systems intended solely for the protection of distribution assets are not included as a BES Protection System, even if they may open a BES Element.” 3. Table 1-5 (Component Type - Control Circuitry) Item 4 “Unmonitored control circuitry associated with protective functions” require a 12 calendar year maximum maintenance interval. We believe UFLS and

Organization	Yes or No	Question 5 Comment
		UVLS control circuitry should be exempted from this requirement. It would take multiple failures to have any impact, and the impact on the BES would be minimal.
Response: Thank you for your comments. 1. There is no distinction in the purpose between "Distribution Protection Systems" and "Transmission Protection Systems". The SDT believes that the Applicability appropriately describes both the entities and the facilities. 2. The SDT modified Applicability 4.2.1 for better consistency with the interpretation that is reflected in PRC-005-1a, and believes that this change may address your concern. 3. The Table 1-5 activities for UFLS/UVLS are constrained to those activities that the SDT considers to be appropriate relative to the reliability impact of these applications. Please see Section 15.3 of the Supplemental Reference Document for additional discussion on this topic.		
Y-W Electric Association, Inc. (4)	Ballot Comment - Affirmative	Y-WEA thanks the SDT for its long, hard work on this standard and for its consideration of previous comments.
Response: Thank you for your comments.		
BGE		No comments.
PNGC Power		Thank you for the opportunity to comment on the draft Standard PRC-005-2 – Protection System Maintenance. We appreciate the work that NERC has put into a new standard to encapsulate and replace the current PRC-005, PRC-008, PRC-011 and PRC-017. But, we believe that the draft Standard needs one important revision before the NERC Board of Trustees should approve it. Specifically, NERC should revise the draft version of PRC-005-2 so that the beginning of Section 4.2 reads as follows: *"4.2. Facilities:* *Protection Systems that (1) are not facilities used in the local distribution of electricity, (2) are facilities and control systems necessary for operating an interconnected electric energy transmission network, and (3) are any of the following:"* This revision is necessary to capture the limits that Congress placed on FERC, NERC, and the Regional Entities in developing and enforcing mandatory reliability standards. Specifically, Section 215(i) of the Federal Power Act provides that the Electric Reliability Organization (ERO) "shall have authority to develop and enforce compliance

Organization	Yes or No	Question 5 Comment
		with reliability standards *for only* the Bulk-Power System." And, Section 215(a)(1) of the statute defines the term "Bulk-Power System" or "BPS" as: (A) facilities and control systems *necessary* for operating an interconnected electric energy transmission network (or any portion thereof); and (B) electric energy from generation facilities needed to maintain transmission system reliability. *The term does not include facilities used in the local distribution of electric energy*." With this language, Congress expressly limited FERC, NERC, and the Regional Entities' jurisdiction with regard to local distribution facilities as well as those facilities not necessary for operating a transmission network. Given that these facilities are statutorily excluded from the definition of the BPS, reliability standards may not be developed or enforced for facilities used in local distribution. In Order No. 672, FERC adopted the statutory definition of the BPS. In Order No. 743-A, issued earlier this year, the Commission acknowledged that "Congress has specifically exempted 'facilities used in the local distribution of electric energy'" from the BPS definition. FERC also held that to the extent *any* facility is a facility used in the local distribution of electric energy, it is exempted from the requirements of Section 215. In Order No. 743-A, FERC delegated to NERC the task of proposing for FERC approval criteria and a process to identify the facilities used in local distribution that will be excluded from NERC and FERC regulation. The critical first step in this process is for NERC to propose criteria for approval by FERC to determine which facilities are used in local distribution, and are therefore <u>not</u> BPS facilities. The criteria to be developed by NERC must exclude any facilities that are used in the local distribution of electric energy, because all such facilities are beyond the scope of the statutory definition of the BPS, which establishes the limit of FERC and NERC jurisdiction. Accordingly, it is critical that NERC draft the new PRC-005-2 standard to expressly exclude facilities used in local distribution. NERC must also expressly exclude from PRC-005-2 those facilities "not necessary for operating an interconnected electric energy transmission network (or any portion thereof)". Similar to the local distribution exclusion, the facilities not necessary for operating a transmission network are not part of the BPS and therefore must be expressly excluded from the standard. We understand, but disagree with, the argument that, because the FPA clearly excludes local distribution facilities and facilities necessary for operating an interconnected electric transmission network from FERC, NERC, and Regional Entity jurisdiction, it is not necessary to expressly exclude these facilities again in reliability standards. This approach might be legally accurate, but could lead to significant confusion for entities attempting to implement the new PRC-005-2 standard. There are numerous examples of Regional Entities, particularly WECC, attempting to assert jurisdiction over such facilities, and regulated entities face significant uncertainty as to which facilities they should consider as within jurisdiction. Clarifying FERC, NERC, and Regional Entity

Organization	Yes or No	Question 5 Comment
		jurisdiction in the BES definition, even if such clarification is already provided in the FPA, would avoid such problems under the new PRC-005-2 standard. Again, we appreciate the work NERC has put in so far on a new Standard. We look forward to working within the drafting process to help implement our recommended revision.
Response: Thank you for your comments. The SDT has revised R1 to refer to Applicability 4.2. The SDT believes that your comments are otherwise already reflected in the Standard, and that no further changes are necessary. The Standard currently addresses maintenance of all Protection Systems that are applied on or to protect BES elements, as well as maintenance of UFLS installed for the BES per PRC-007, UVLS installed on or for the BES per PRC-010, and Special Protection Systems installed on or for the BES per PRC-012, PRC-013, PRC-014, and PRC-015. Therefore, the Standard is already constrained as you suggest. Additionally, Section 202 of the NERC Rules of Procedure defines "Reliability Standard" as "a requirement to provide for reliable operation of the bulk power system …" The requirements regarding maintenance of Protection Systems for UFLS and UVLS directly support this definition.		
ReliabilityFirst	Ballot Comment - Affirmative	ReliabilityFirst votes affirmative but offers the following suggestions/comments: 1. R3 should be split into two separate requirements since there are two distinct actions being requested (e.g. "…shall implement and follow its PSMP" is one requirement and "… shall initiate resolution of any identified maintenance correctable issues" is the second requirement. 2. There are a number of terms which are defined only for the use of the PRC-005-2 standard which will not be moved to the Glossary of Terms., and even though I completely agree with this concept, I believe this concept is not mentioned nor is it allowed per the NERC Standard Processes Manual.
Response: Thank you for your comments. 1. The SDT believes that the two activities are intertwined and should remain within a single requirement. 2. The SDT has been advised by NERC Standards staff that this is acceptable, and has adopted the methodology for doing so as suggested by staff.		

Consideration of Comments

Protection System Maintenance and Testing – Project 2007-17

The Protection System Maintenance and Testing Drafting Team would like to thank all commenters who submitted comments on the first draft of the PRC-005-2 standard for Protection System Maintenance and Testing (Project 2007-17). This standard and its associated documents were posted for a 45-day public comment period from August 15, 2011 through September 29, 2011. Stakeholders were asked to provide feedback on the standard and associated documents through a special electronic comment form. There were 48 sets of comments, including comments from approximately 147 different people and approximately 98 companies representing 9 of the 10 Industry Segments as shown in the table on the following pages.

All comments submitted may be reviewed in their original format on the standard's project page:

http://www.nerc.com/filez/standards/Protection_System_Maintenance_Project_2007-17.html

If you feel that your comment has been overlooked, please let us know immediately. Our goal is to give every comment serious consideration in this process! If you feel there has been an error or omission, you can contact the Vice President and Director of Standards and Training, Herb Schrayshuen, at 404-446-2560 or at herb.schrayshuen@nerc.net. In addition, there is a NERC Reliability Standards Appeals Process.[1]

Summary Consideration of all Comments Received:

SAR:

The SDT made several changes to the SAR. The proposed title of the standard was changed to 'Protection System Maintenance'; Reliability Principle item #4 was removed as it does not apply to the standard; and the 'Transmission and Generation' descriptor of Protection Systems was removed from the Detailed Description area of the SAR.

Applicability:

The SDT revised Applicability 4.2.5.4 to indicate that, for generator-connected station service transformers, only the Protection Systems that trip the generator, either directly or via a lockout relay, are included in the standard.

Requirements:

Requirement R1 part 1.3 has been removed.

[1] The appeals process is in the Standard Processes Manual: http://www.nerc.com/files/Appendix_3A_Standard_Processes_Manual_20110825.pdf.

The SDT split Requirement R3 into three separate requirements for better clarity.

Requirement R3 has been revised so that, for time-based programs, entities must comply with the standard's tables rather than their PSMP. Requirement R3 now reads:

> **R3.** Each Transmission Owner, Generator Owner, and Distribution Provider that utilizes time-based maintenance program(s) shall maintain its Protection System components that are included within the time-based maintenance program in accordance with the minimum maintenance activities and maximum maintenance intervals prescribed within Tables 1-1 through 1-5, Table 2, and Table 3.

Requirement R4 has been added to address performance-based maintenance. The new Requirement R4 is as follows:

> **R4.** Each Transmission Owner, Generator Owner, and Distribution Provider that utilizes performance-based maintenance program(s) in accordance with Requirement R2 shall implement and follow its PSMP for its Protection System components that are included within the performance-based program.

Requirement R5 has been added to address Unresolved Maintenance Issues. The definition of the term 'Unresolved Maintenance Issues' has been enhanced for additional clarity, and now reads:

> ***Unresolved Maintenance Issue*** *- A deficiency identified during a maintenance activity that causes the component to not meet the intended performance and requires follow-up corrective action.*

The new Requirement R5 is as follows:

> **R5**. Each Transmission Owner, Generator Owner, and Distribution Provider shall demonstrate efforts to correct identified Unresolved Maintenance Issues.

Measures

The SDT revised and drafted new measures to comport with the requirements.

Tables

Most commenters seemed to agree in general that the restructured Tables added clarity and some commenters offered suggestions for further improvement. Minor clarifying changes were made to the Tables themselves, and additional discussion was added to the "Supplementary Reference and FAQ" document to address various comments.

In Table 1-5 (Component Type - Control Circuitry Associated With Protective Functions), the SDT removed the auxiliary relays from the 6 year periodic maintenance associated with electromechanical lockout devices, and included them in the 12 year periodic maintenance associated with the unmonitored control circuitry associated with protective functions.

Table 1-4(f) was modified to more accurately represent the monitoring attributes and related activities for monitored Vented Lead-Acid and Valve-Regulated Lead-Acid batteries.

Implementation Plan

Minor clarifying changes were made to the Implementation Plan.

VLSs:

Changes were made to the make the VSLs conform to the new and changed requirements.

Supplementary Reference Document

Changes were made to the "Supplementary Reference and FAQ" document, corresponding to all changes to the standard.

Unresolved Minority Views:

- A few commenters continued to object to the establishment of maximum allowable intervals for the maintenance of various Protection System component types. The SDT continued to respond that FERC Order 693 and the approved SAR direct the SDT to develop a standard with maximum allowable intervals and minimum maintenance activities. The SDT believes that the intervals established within the Tables are appropriate as continent-wide maximum allowable intervals.

- Several commenters were concerned that an entity has to be "perfect" in order to be compliant; the SDT responded that NERC Standards currently allow no provision for any degree of non-performance relative to the requirements.

- Several commenters continued to insist that "grace periods" should be allowed. The SDT continued to respond that grace periods would not be measurable.

- Several commenters continued to question the propriety of including distribution system Protection Systems, almost all related to UFLS/UVLS. The SDT obtained a position from NERC legal staff, and cited this position in responding that these devices are indeed within NERC's authority because they are installed for the reliability of the BES.

- A few commenters questioned the inclusion of the direct current (dc) control circuitry for sudden pressure relays even though the relays themselves are excluded from the definition of "Protection System"; the SDT reiterated its position that this dc control circuitry is included because the dc control circuitry is associated with protective functions.

- A few commenters objected to the language in the Data Retention section regarding the retention of the maintenance records for two full intervals. The SDT explained that this expectation is consistent with the Compliance Monitoring and Enforcement Program.

Index to Questions, Comments, and Responses

1. Do you have any comments regarding the existing SAR for this project? 11
2. In response to comments, the term "Maintenance Correctable Issue" was revised to "Unresolved Maintenance Issue". Do you agree with this change? If you do not agree, please provide specific suggestions for improvement.....19
3. In response to comments, the SDT revised the previous "3 calendar months" interval to "4 calendar months" for communications systems and station dc supply. Do you agree with this change? If you do not agree, please provide specific suggestions for improvement. 29
4. The SDT extracted the maintenance activities and intervals for distributed UFLS and UVLS systems from Table 1-1 through 1-5 and placed them into a new Table 3 to more clearly illustrate the requirements related to these systems. Do you agree with this change? If you do not agree, please provide specific suggestions for improvement.....39
5. The SDT has revised the "Supplementary Reference and FAQ" document which is supplied to provide supporting discussion for the Requirements within the standard. Do you agree with the changes? If not, please provide specific suggestions for change.....55
6. If you have any other comments on this Standard that you have not already provided in response to the prior questions, please provide them in the comment section. 79

The Industry Segments are:

1 — Transmission Owners
2 — RTOs, ISOs
3 — Load-serving Entities
4 — Transmission-dependent Utilities
5 — Electric Generators
6 — Electricity Brokers, Aggregators, and Marketers
7 — Large Electricity End Users
8 — Small Electricity End Users
9 — Federal, State, Provincial Regulatory or other Government Entities
10 — Regional Reliability Organizations, Regional Entities

Group/Individual		Commenter	Organization	Registered Ballot Body Segment									
				1	2	3	4	5	6	7	8	9	10
1.	Group	Guy Zito	Northeast Power Coordinating Council										X

	Additional Member	Additional Organization	Region	Segment Selection
1.	Alan Adamson	New York State Reliability Council, LLC	NPCC	10
2.	Gregory Campoli	New York Independent System Operator	NPCC	2
3.	Kurtis Chong	Independent Electricity System Operator	NPCC	2
4.	Sylvain Clermont	Hydro-Quebec TransEnergie	NPCC	1
5.	Michael Schiavone	National Grid	NPCC	1
6.	Gerry Dunbar	Northeast Power Coordinating Council	NPCC	10
7.	Brian Evans-Mongeon	Utility Services	NPCC	8
8.	Mike Garton	Dominion Resources Services, Inc.	NPCC	5
9.	Kathleen Goodman	ISO - New England	NPCC	2
10.	Chantel Haswell	FPL Group, Inc.	NPCC	5

Group/Individual	Commenter	Organization	Registered Ballot Body Segment									
			1	2	3	4	5	6	7	8	9	10
11. David Kiguel	Hydro One Networks Inc.	NPCC 1										
12. Michael Lombardi	Northeast Utilities	NPCC 1										
13. Randy MacDonald	New Brunswick Power Transmission	NPCC 9										
14. Bruce Metruck	New York Power Authority	NPCC 6										
15. Lee Pedowicz	Northeast Power Coordinating Council	NPCC 10										
16. Robert Pellegrini	The United Illuminating Company	NPCC 1										
17. Si Truc Phan	Hydro-Quebec TransEnergie	NPCC 1										
18. David Ramkalawan	Ontario Power Generation, Inc.	NPCC 5										
19. Saurabh Saksena	National Grid	NPCC 1										
20. Wayne Sipperly	New York Power Authority	NPCC 5										
21. Donald Weaver	New Brunswick System Operator	NPCC 2										
22. Ben Wu	Orange and Rockland Utilities	NPCC 1										
2. Group	Dave Davidson	Tennessee Valley Authority	X				X					

	Additional Member	Additional Organization	Region	Segment Selection
1.	Rusty Harison	TOM Support	SERC	1
2.	Pat Caldwell	TOM Support	SERC	1
3.	Paul Barnett	Tom Support	SERC	1
4.	David Thompson	TVA Compliance	SERC	5
5.	Jerry Finley	Power Control Systems	SERC	1
6.	Frank Cuzzort	TVA Generation - Nuclear	SERC	5
7.	Robert Brown	TVA Generation - Nuclear	SERC	5
8.	Roberts Mares	TVA Generation - Fossil	SERC	5
9.	Annette Dudley	TVA Generation - Hydro	SERC	5

3. Group	Ron Sporseen	PNGC Comment Group	X		X	X				X		

	Additional Member	Additional Organization	Region	Segment Selection
1.	Bud Tracy	Blachly-Lane Electric Cooperative	WECC	3
2.	Dave Markham	Central Electric Cooperative	WECC	3
3.	Dave Hagen	Clearwater Power	WECC	3
4.	Roman Gillen	Consumer's Power	WECC	1, 3
5.	Roger Meader	Coos-Curry Electric Cooperative	WECC	3
6.	Dave Sabala	Douglas Electric Cooperative	WECC	3

Group/Individual	Commenter	Organization	Registered Ballot Body Segment									
			1	2	3	4	5	6	7	8	9	10
7. Bryan Case	Fall River Electric Cooperative	WECC 3										
8. Rick Crinklaw	Lane Electric Cooperative	WECC 3										
9. Michael Henry	Lincoln Electric Cooperative	WECC 3										
10. Richard Reynolds	Lost River	WECC 3										
11. Jon Shelby	Northern Lights	WECC 3										
12. Ray Ellis	Okanogan Electric Cooperative	WECC 3										
13. Aleka Scott	PNGC Power	WECC 4										
14. Heber Carpenter	Raft River Electric Cooperative	WECC 3										
15. Ken Dizes	Salmon River Electric Cooperative	WECC 1, 3										
16. Steve Eldrige	Umatilla Electric Cooperative	WECC 3, 1										
17. Marc Farmer	West Oregon Electric Cooperative	WECC 3										
18. Margaret Ryan	PNGC Power	WECC 8										
19. Stuart Sloan	Consumer's Power	WECC 1										
4. Group	Chris Higgins	Bonneville Power Administration	X		X		X	X				
Additional Member	**Additional Organization**	**Region** **Segment Selection**										
1. Dean Bender	SPC Technical Svcs	WECC 1										
2. John Kerr	Technical Operations	WECC 1										
3. Lorissa Jones	Transmission Internal Ops	WECC 1										
4. Greg Vassallo	Customer Service Engineering	WECC 1										
5. Mason Bibles	Sub Maint and HV Engineering	WECC 1										
6. Deanna Phillips	FERC Compliance	WECC 1, 3, 5										
5. Group	Mike Garton	Dominion	X		X		X	X				
Additional Member	**Additional Organization**	**Region** **Segment Selection**										
1. Michael Crowley	Virginia Electric and Power Company	SERC 1, 3										
2. Michael Gildea	Dominion Resources Services, Inc.	MRO 5										
3. Louis Slade	Dominion Resources Services, Inc.	RFC 5										
6. Group	Sam Ciccone	FirstEnergy	X		X	X	X	X				
Additional Member	**Additional Organization**	**Region** **Segment Selection**										
1. Jim Kinney	FE	RFC 1										
2. Craig Boyle	FE	RFC 1										
3. Frank Hartley	FE	RFC 1										

Group/Individual		Commenter	Organization	Registered Ballot Body Segment									
				1	2	3	4	5	6	7	8	9	10
4. Bill Duge		FE	RFC 5										
5. Doug Hohlbaugh		FE	RFC 1, 3, 4, 5, 6										
7.	Group	Robert Rhodes	Southwest Power Pool Standards Review Group		X								

Additional Member	Additional Organization	Region	Segment Selection
1. John Allen	City Utilities of Springfield, Missouri	SPP	1, 4
2. Forrest Brock	Western Farmers Electric Cooperative	SPP	1, 3, 5
3. Anthony Cassmeyer	Western Farmers Electric Cooperative	SPP	1, 3, 5
4. Tony Eddleman	Nebraska Public Power District	MRO	1, 3, 5
5. Louis Guidry	CLECO Power	SPP	1, 3, 5
6. Jonathan Hayes	Southwest Power Pool	SPP	2
7. Terri Pyle	Oklahoma Gas & Electric	SPP	1, 3, 5
8. Ashley Stringer	Oklahoma Municipal Power Authority	SPP	4

8.	Group	Frank Gaffney	Florida Municipal Power Agency	X		X	X	X	X				

Additional Member	Additional Organization	Region	Segment Selection
1. Timothy Beyrle	City of New Smyrna Beach	FRCC	4
2. Greg Woessner	Kissimmee Utility Authority	FRCC	3
3. Jim Howard	Lakeland Electric	FRCC	3
4. Lynne Mila	City of Clewiston	FRCC	3
5. Joe Stonecipher	Beaches Energy Services	FRCC	1
6. Cairo Vanegas	Fort Pierce Utility Authority	FRCC	4
7. Randy Hahn	Ocala Utility Services	FRCC	3

9.	Group	Mallory Huggins	NERC Staff Technical Review										

No additional members listed.

10.	Group	David Thorne	Pepco Holdings Inc & Affiliates	X		X							

Additional Member	Additional Organization	Region	Segment Selection
1. Carlton Bradshaw	Delmarva Power and Light	RFC	1

11.	Group	Carol Gerou	MRO's NERC Standards Review Forum										X

Additional Member	Additional Organization	Region	Segment Selection
1. Mahmood Safi	Omaha Public Utility District	MRO	1, 3, 5, 6
2. Chuck Lawrence	American Transmission Company	MRO	1

Group/Individual		Commenter	Organization	Registered Ballot Body Segment									
				1	2	3	4	5	6	7	8	9	10
3. Tom Webb		Wisconsin Public Service Corporation	MRO 3, 4, 5, 6										
4. Jodi Jenson		Western Area Power Administration	MRO 1, 6										
5. Ken Goldsmith		Alliant Energy	MRO 4										
6. Alice Ireland		Xcel Energy	MRO 1, 3, 5, 6										
7. Dave Rudolph		Basin Electric Power Cooperative	MRO 1, 3, 5, 6										
8. Eric Ruskamp		Lincoln Electric System	MRO 1, 3, 5, 6										
9. Joe DePoorter		Madison Gas & Electric	MRO 3, 4, 5, 6										
10. Scott Nickels		Rochester Public Utilties	MRO 4										
11. Terry Harbour		MidAmerican Energy Company	MRO 1, 3, 5, 6										
12. Marie Knox		Midwest ISO Inc.	MRO 2										
13. Lee Kittelson		Otter Tail Power Company	MRO 1, 3, 4, 5										
14. Scott Bos		Muscatine Power and Water	MRO 1, 3, 5, 6										
15. Tony Eddleman		Nebraska Public Power District	MRO 1, 3, 5										
16. Mike Brytowski		Great River Energy	MRO 1, 3, 5, 6										
12.	Group	Jason Marshall	ACES Power Collaborators						X				
Additional Member		Additional Organization	Region Segment Selection										
1. James Jones		AEPCO/SWTC	WECC 1, 3, 5										
2. Lindsay Shepard		Sunflower Electric Power Corporation	SPP 1, 3, 5										
13.	Individual	Janet Smith, Regulaory Compliance Supervisor	Arizona Public Service Company	X		X		X	X				
14.	Individual	Bill Shultz	Southern Company Generation					X				X	
15.	Individual	Bo Jones	Westar Energy	X		X		X	X				
16.	Individual	Max Emrick	Tacoma Power	X		X	X	X	X				
17.	Individual	Jim Eckelkamp	Progress Energy	X		X		X	X				
18.	Individual	Brandy A. Dunn	Western Area Power Administration	X					X				
19.	Individual	Sandra Shaffer	PacifiCorp	X		X		X	X				
20.	Individual	Mary Jo Cooper	ZGlobal Engineering and Energy Solutions								X		
21.	Individual	Nicholas R. Finney	Saft America, Inc.								X		
22.	Individual	Tony Eddleman	Nebraska Public Power District	X		X		X				X	

Group/Individual		Commenter	Organization	Registered Ballot Body Segment									
				1	2	3	4	5	6	7	8	9	10
23.	Individual	John Bee	Exelon	X		X		X					
24.	Individual	Don Jones	Texas Reliability Entity										X
25.	Individual	Steve Alexanderson	Central Lincoln			X	X					X	
26.	Individual	Dan Roethemeyer	Dynegy Inc.					X					
27.	Individual	Thad Ness	American Electric Power	X		X		X	X				
28.	Individual	Eric Ruskamp	Lincoln Electric System	X		X		X	X				
29.	Individual	Joe O'Brien	NIPSCO	X		X		X	X				
30.	Individual	Edward Davis	Entergy Services	X		X		X	X				
31.	Individual	Michael Falvo	Independent Electricity System Operator		X								
32.	Individual	Daniel Duff	Liberty Electric Power LLC					X					
33.	Individual	Kirit Shah	Ameren	X		X		X	X				
34.	Individual	Michael Lombardi	Northeast Utilities	X		X		X					
35.	Individual	Gary Kruempel	MidAmerican Energy Company	X		X		X					
36.	Individual	Joe Petaski	Manitoba Hydro	X		X		X	X				
37.	Individual	Andrew Z. Pusztai	American Transmission Company	X									
38.	Individual	Antonio Grayson	Southern Company Transmission	X		X		X					
39.	Individual	Brian Evans-Mongeon	Utility Services, Inc								X		
40.	Individual	Michael Moltane	ITC Holdings	X									
41.	Individual	Michelle D'Antuono	Igleside Cogeneration LP					X					
42.	Individual	Armin Klusman	CenterPoint Energy	X									
43.	Individual	Darryl Curtis	Oncor Electric Delivery Company LLC	X									
44.	Individual	Tracy Richardson	Springfield Utility Board			X							
45.	Individual	Andrew Gallo	City of Austin dba Austin Energy	X		X	X	X	X				
46.	Individual	Gerry Schmitt	BGE	X									
47.	Individual	Amir Hammad	Constellation Power Generation					X					
48.	Individual	Brenda Powell	Constellation Energy Commodities Group						X				

1. **Do you have any comments regarding the existing SAR for this project?**

Summary Consideration: In response to the comments, the SDT made several changes to the SAR.

1. The proposed title of the standard was changed to 'Protection System Maintenance.'

2 Reliability Principle item #4 was removed as it does not apply to the standard.

3 The 'Transmission and Generation' descriptor of Protection Systems was removed from the Detailed Description area of the SAR.

Several comments were offered, suggesting that the SAR address validating the accuracy of settings calculations provided to the field test personnel. The SDT declined to modify the SAR because they believe validating the accuracy of settings as provided to testing personnel is an internal management issue that should be addressed by the entity, and is beyond the scope of a 'maintenance and testing' standard.

Several comments were offered, suggesting that "the requirements should reflect the inherent differences between various protection system technologies," however the requirements should not mandate different testing methods and testing intervals based on that technology." The SDT declined to modify the SAR because they believe the current PRC-005-2 draft does not mandate specific testing methods; the responsible entity has latitude in establishing its PSMP. Specific activities (such as those for various technologies of "station dc supply") are prescribed, but the entity still has discretion in determining the most appropriate method of conducting those activities.

Organization	Yes or No	Question 1 Comment
Northeast Power Coordinating Council	Yes	Maintenance and testing of protection systems is the final step in the process that begins with the calculation of settings. The calculation of settings is followed by the application of those settings to the equipment. Maintenance and testing ensures that the settings given to testing personnel have been applied as given. This Standard addresses the Maintenance and Testing of protection systems. It should also address the need to validate the accuracy of the settings given to the field. A statement should be added to the SAR to address this need.
Response: Thank you for your comment. You are correct in your observation that the standard, as established in the project scope, addresses the maintenance and testing of Protection Systems. The SDT believes validating the accuracy of settings as		

Organization	Yes or No	Question 1 Comment
provided to testing personnel is an internal management issue that should be addressed by the entity, and is beyond the scope of a 'maintenance and testing' standard. Thus, the SDT does not believe that the SAR should be modified.		
ZGlobal Engineering and Energy Solutions	Yes	Table 1-4(a-c) excludes distributed UFLS and UVLS for batteries but references Table 3. Table 3 does not mention an interval for batteries. Is this an error?
Response: Thank you for your comment. In Table 3 we address the dc supply for tripping only non-BES interrupting devices as part of the UFLS and UVLS system. Table 3 explicitly limits the activities and intervals for station dc supply (relative to distributed UVLS/UFLS) to verifying the Protection System dc supply voltage every 12 calendar years, and requires nothing beyond that for station batteries in this application. This is not an error within the standard.		
Utility Services, Inc	Yes	We would urge that the SAR be modified to include Validation of Protection System settings. Presently, the standard does not provide for the explicit validation of the settings and it is possible that such mis-settings could be the reason for a misoperation. If a validation of the settings was explicitly called for in the standard, then the misoperation would be less likely to occur for that reason.
Response: Thank you for your comment. The SDT believes validating the accuracy of settings as provided to testing personnel is an internal management issue that should be addressed by the entity, and is beyond the scope of a 'maintenance and testing' standard. Thus, the SDT does not believe that the SAR should be modified. If this becomes a "Misoperation" problem for the entity, NERC Reliability Standard PRC-004-2 requires the entity to develop and implement a Corrective Action Plan to address the cause of the Misoperation.		
Constellation Power Generation	Yes	Although Constellation Power Generation agrees with some of the refinements prescribed in the SAR, there are a few items of concern. Constellation Power Generation agrees that "the requirements should reflect the inherent differences between various protection system technologies," however the requirements should not mandate different testing methods and testing intervals based on that technology. The Registered Entity should be given the latitude to address different technologies through its PSMP, and the requirements should reflect that.

Organization	Yes or No	Question 1 Comment
Response: Thank you for your comment. The SDT believes the current PRC-005-2 draft does not mandate specific testing methods; the responsible entity has latitude in establishing its PSMP. Specific activities (such as those for various technologies of "station dc supply") are prescribed, but the entity still has discretion in determining the most appropriate method of conducting those activities.		
Constellation Energy Commodities Group	Yes	Although Constellation Energy Commodities Group agrees with some of the refinements prescribed in the SAR, there are a few items of concern. Constellation Energy Commodities Group agrees that "the requirements should reflect the inherent differences between various protection system technologies," however the requirements should not mandate different testing methods and testing intervals based on that technology. The Registered Entity should be given the latitude to address different technologies through its PSMP, and the requirements should reflect that.
Response: Thank you for your comment. The SDT believes the current PRC-005-2 draft does not mandate specific testing methods; the responsible entity has latitude in establishing its PSMP. Specific activities (such as those for various technologies of "station dc supply") are prescribed, but the entity still has discretion in determining the most appropriate method of conducting those activities.		
Saft America, Inc.	Yes	
Manitoba Hydro	No	**1.** Detailed Description: The phrase "Transmission & Generation Protection Systems" used in paragraph 1 should be "Transmission and generation Protection Systems". "Transmission" and "Protection System" are defined words in the NERC Glossary of Terms; "Generation" is not a defined term and should not be capitalized. **2.** Applicable Reliability Principles: Is item 4 [Plans for emergency operation and system restoration of interconnected bulk electric systems shall be developed, coordinated, maintained and implemented.] applicable to Protection System Maintenance?
Response: Thank you for your comment.		

Organization	Yes or No	Question 1 Comment
1. The SAR has been modified in consideration of your comment. The SDT removed the "Transmission & Generation" descriptors from the sentence. 2. The SAR has been modified in consideration of your comment. The Applicable Reliability Principle 4 has been unchecked as it is not applicable to this standard.		
Tennessee Valley Authority	No	
PNGC Comment Group	No	
Bonneville Power Administration	No	
Dominion	No	
FirstEnergy	No	
Southwest Power Pool Standards Review Group	No	
Florida Municipal Power Agency	No	
NERC Staff	No	

Organization	Yes or No	Question 1 Comment
Technical Review		
Pepco Holdings Inc & Affiliates	No	
MRO's NERC Standards Review Forum	No	
ACES Power Collaborators	No	
Arizona Public Service Company	No	
Southern Company Generation	No	
Westar Energy	No	
Tacoma Power	No	
Progress Energy	No	
Western Area Power Administration	No	

Organization	Yes or No	Question 1 Comment
PacifiCorp	No	
Nebraska Public Power District	No	
Exelon	No	
Texas Reliability Entity	No	
Central Lincoln	No	
Dynegy Inc.	No	
Lincoln Electric System	No	
NIPSCO	No	
Entergy Services	No	
Independent Electricity System Operator	No	
Liberty Electric Power LLC	No	

Organization	Yes or No	Question 1 Comment
Ameren	No	
Northeast Utilities	No	
MidAmerican Energy Company	No	
American Transmission Company	No	
Southern Company Transmission	No	
ITC Holdings	No	
Igleside Cogeneration LP	No	
Oncor Electric Delivery Company LLC	No	
Springfield Utility Board	No	
City of Austin	No	

Organization	Yes or No	Question 1 Comment
dba Austin Energy		
BGE	No	No comment.
Response: Thank you for your comment.		

2. In response to comments, the term "Maintenance Correctable Issue" was revised to "Unresolved Maintenance Issue". Do you agree with this change? If you do not agree, please provide specific suggestions for improvement.

Summary Consideration: Most commenters agreed with the change in the term from "Maintenance Correctable Issue" to "Unresolved Maintenance Issue", with some offering further suggestion for improvement and clarification. Several commenters expressed concern that, without further clarity, auditors may confuse initiation of resolution for an issue with completion of the activities necessary to ultimately resolve the issue, but the SDT believes that this term (and its use within the Standard) is unequivocal. In response to comments, the SDT has clarified the intent of the requirement to initiate resolution of Unresolved Maintenance Issues by including it separately as Requirement R5 (shown below) and revising the language such that the responsible entity must demonstrate its efforts to correct Unresolved Maintenance Issues. Demonstrating the entity has initiated resolution can include such things as documentation of a work order, replacement component order, invoice, or purchase order, etc… Producing evidence of this nature would then indicate adherence to the requirement.

Requirement R5 now reads:

R5. Each Transmission Owner, Generator Owner, and Distribution Provider shall demonstrate efforts to correct identified Unresolved Maintenance Issues.

Organization	Yes or No	Question 2 Comment
Occidental Chemical	Affirmative Ballot	In response to comments, the term "Maintenance Correctable Issue" was revised to "Unresolved Maintenance Issue". Do you agree with this change? If you do not agree, please provide specific suggestions for improvement. Yes. The original term inferred that the problem detected was correctible through follow-up maintenance – which is not always the case. The term "Unresolved Maintenance Issue" is more appropriate.
Response: Thank you for your comment and your Affirmative Ballot.		
Independent Electricity System	Yes	The IESO agrees with the revision to the term. However, we observed the inconsistent format of this defined term used throughout the draft standard and would like to point it out to the Drafting Team. The capitalized term "Unresolved Maintenance Issue" is defined on Page 2 and used as a capitalized term in the blue box on Page 5. The defined term was made

Organization	Yes or No	Question 2 Comment
Operator		lowercase and used in other areas of the document as "unresolved maintenance issues" (eg. Page 5 and Page 8). We recommend that the format of this defined term be consistent throughout the draft standard.
Response: Thank you for your comment. The SDT has capitalized the term throughout the standard for consistency.		
MidAmerican Energy Company	Yes	1. Requirement R3 includes the following: "and initiate resolution of any unresolved maintenance issues". For clarification it is recommended that the following change be made to this phrase: "initiate resolution of any unresolved Protection System maintenance issues". 2. Also it is recommended that the following be added to the list in M3: "work management system information".
Response: Thank you for your comment. **1. The SDT observes that your concern is addressed by the Applicability of the standard (specifically addressing Protection Systems), and that the change you suggest is unnecessary.** **2. The language of Measure M3 specifies "*may include but is not limited to dated maintenance records …*" and could include records and information from a work management system without excluding other maintenance records an entity might have outside a work management system.**		
Utility Services, Inc	Yes	While this helps, we are concerned that during the term of the Unresolved Maintenance Issue is being resolved, a question of compliance to the standard might be pending out. It should be clarified that during this term, compliance to the standard is being satisfied and not deemed to be non-compliant.
Response: Thank you for your comment. The SDT has clarified the intent of the requirement to initiate resolution of Unresolved Maintenance Issues by including it separately as Requirement R5 and revising the language such that the responsible entity must demonstrate its efforts to correct Unresolved Maintenance Issues.		
Igleside	Yes	The original term inferred that the problem detected was correctible through follow-up

Organization	Yes or No	Question 2 Comment
Cogeneration LP		maintenance -which is not always the case. The term “Unresolved Maintenance Issue” is more appropriate.
Response: Thank you for your comment.		
Springfield Utility Board	Yes	This change has no impact on how Springfield Utility Board currently operates.
Response: Thank you for your comment.		
Dominion	Yes	
FirstEnergy	Yes	
Southwest Power Pool Standards Review Group	Yes	
Florida Municipal Power Agency	Yes	
NERC Staff Technical Review	Yes	
Pepco Holdings Inc & Affiliates	Yes	
ACES Power	Yes	

Organization	Yes or No	Question 2 Comment
Collaborators		
Arizona Public Service Company	Yes	
Westar Energy	Yes	
Tacoma Power	Yes	
Western Area Power Administration	Yes	
PacifiCorp	Yes	
Saft America, Inc.	Yes	
Nebraska Public Power District	Yes	
Exelon	Yes	
Dynegy Inc.	Yes	
Lincoln Electric System	Yes	
Entergy Services	Yes	

Organization	Yes or No	Question 2 Comment
Liberty Electric Power LLC	Yes	
Ameren	Yes	
Northeast Utilities	Yes	
Manitoba Hydro	Yes	
American Transmission Company	Yes	
ITC Holdings	Yes	
Oncor Electric Delivery Company LLC	Yes	
City of Austin dba Austin Energy	Yes	
Bonneville Power Administration	No	BPA agrees that the term “Maintenance Correctable Issue” is an improvement over “Unresolved Maintenance Issue”, however, BPA feels that the idea of a “Maintenance Correctable Issue” is very vague, and would perhaps be better left out of the standard. As written, it is unclear when an issue is a “Maintenance Correctable Issue” and exactly how it has to be dealt with. R3 requires the initiation of resolution of any unresolved

Organization	Yes or No	Question 2 Comment
		maintenance issues.
Response: Thank you for your comment. **The SDT has clarified the intent of the requirement to initiate resolution of Unresolved Maintenance Issues by including it separately as Requirement R5 and revising the language such that the responsible entity must demonstrate its efforts to correct Unresolved Maintenance Issues.**		
MRO's NERC Standards Review Forum	No	Requirement R3 includes the following: "and initiate resolution of any unresolved maintenance issues". The addition of unresolved maintenance issues to the standard is not included in the SAR and has the potential to cause confusion and misinterpretation. It is suggested that this phrase be removed.
Response: Thank you for your comment. The SAR was developed and submitted by the NERC System Protection and Control Task Force (SPCTF) who later prepared and submitted the Technical Reference "Protection System Maintenance" as a guide for the SDT to use in developing PRC-005-2. In crafting the elements of PRC-005-2, the SDT has endeavored to follow the SAR, which directs addressing FERC Order 693 directives; recommendations from the SPCTF Assessment of Standards PRC-005-1, PRC-008-0, PRC-011-0, PRC-017-0; and consideration of stakeholder comments received during the development of the Version 0 and Phase III & IV standards. **In the Detailed Description section of the SAR, bullet point four recommends the SDT define the terms "maintenance programs" and "testing programs" while recognizing other terms may be necessary for clarity. The SPCTF Assessment further recommends that PRC-005-2 "…should clarify that two goals are being covered: The maintenance portion should have requirements that keep the protection system equipment operating within manufacturers' design specifications throughout the service life" and the "testing portion should… verify the functional performance of protection systems". Additionally, in the SPCTF Technical Reference "Protection System Maintenance", the term "maintenance" is defined as "An ongoing program by which Protection System function is proved, and restored if needed."** **The SDT developed and defined the term "Protection System Maintenance Program" (PSMP) and its elements (which includes the testing portion) to achieve the goal of the recommendations of the SAR, SPCTF Assessment, and guidance given in the SPCTF Technical Reference. Consistent with this guidance, a PSMP is defined in PRC-005-2 as "An ongoing program by which Protection System components are kept in working order and proper operation of malfunctioning components is restored." The term "Unresolved Maintenance Issue" defines those things identified as needing follow-up action in order to restore them to proper**		

Organization	Yes or No	Question 2 Comment
operation. This may include repair or replacement activities that cannot be performed during the periodic PSMP activity through which the deficiency was discovered. Demonstrating the entity has initiated resolution of these issues might then include such things as documentation of a work order, replacement component order, invoice, or purchase order, etc… For clarity, the SDT has included these examples in the associated Measure for this requirement in the current draft. **The SDT has clarified the intent of the requirement to initiate resolution of Unresolved Maintenance Issues by including it separately as Requirement R5 and revising the language such that the responsible entity must demonstrate its efforts to correct Unresolved Maintenance Issues.**		
Southern Company Generation	No	The measure associated with the requirement that includes this term is non-specific with regards to what an auditor will require as proof of the initiation of resolving the issue. It is suggested that one of these two courses be followed: either a) eliminate the requirement to initiate resolution, or b) fully describe what evidence is expected for this part.
Response: Thank you for your comment. The SDT believes that an effective PSMP must include correction of deficiencies, but management of completion of any Unresolved Maintenance Issues is a complex topic which may involve a wide variety of activities (with varying completion timelines). The associated Measure lists examples of what may be effective evidence (more examples have been added); specific evidence, for any specific situation, will vary based on the particulars of that situation. The SDT has clarified the intent of the requirement to initiate resolution of Unresolved Maintenance Issues by including it separately as Requirement R5 and revising the language such that the responsible entity must demonstrate its efforts to correct Unresolved Maintenance Issues.		
American Electric Power	No	The definition's wording is satisfactory, and we agree with the removal of "failure of a component to operate within design parameters". However, we do not agree with the use of the word "unresolved" within the term itself, as we believe this word may convey that the issue was not known or identified. We suggest replacing "Unresolved Maintenance Issue" with "Corrective Maintenance Issue".
Response: Thank you for your comment. The SDT has clarified the intent of the requirement to initiate resolution of Unresolved Maintenance Issues by including it separately as Requirement R5 and revising the language such that the responsible entity must demonstrate its efforts to correct Unresolved Maintenance Issues.		

Organization	Yes or No	Question 2 Comment
Southern Company Transmission	No	The measure associated with the requirement that includes this term is non-specific with regards to what an auditor will require as proof of the initiation of resolving the issue. It is suggested that one of these two courses be followed: either a) eliminate the requirement to initiate resolution, or b) fully describe what evidence is expected for this part.
Response: Thank you for your comment. **The SDT believes that an effective PSMP must include correction of deficiencies, but management of completion of any Unresolved Maintenance Issues is a complex topic which may involve a wide variety of activities (with varying completion timelines). The associated Measure lists examples of what may be effective evidence (more examples have been added); specific evidence, for any specific situation, will vary based on the particulars of that situation. The SDT has clarified the intent of the requirement to initiate resolution of Unresolved Maintenance Issues by including it separately as Requirement R5 and revising the language such that the responsible entity must demonstrate its efforts to correct Unresolved Maintenance Issues.**		
BGE	No	No comment about the change itself, but the terms were not consistently applied in the Supplemental Reference Manual (see last comment).
Response: Thank you for your comment. The SDT has further reviewed and revised the Supplementary Reference and FAQ document to facilitate consistent use of the terms.		
Constellation Power Generation	No	As R3 is currently written, Constellation Power Generation is concerned that this requirement may decrease the reliability of the BES under certain circumstances. The severity of the "deficiency" found will dictate the method and timing of a "follow up correction action". For a generator, the corrective action may not be "initiated" until the next planned outage, which may be a few years. However, R3 suggests that to comply, a generation site may have to extend an outage or take a forced and unplanned outage, to perform the corrective action. This would decrease the available resources in a given BA's footprint and potentially decrease the reliability of the BES.
Response: Thank you for your comment. **PRC-005-2 only requires the entity "… *initiate resolution*" of the issue found. The SDT recognizes that performance of the activities**		

Organization	Yes or No	Question 2 Comment
necessary to resolve an issue are entirely dependent upon the circumstances surrounding that issue and, consequently, will require varying amounts of resources and time to complete the process. The SDT has clarified the intent of the requirement to initiate resolution of Unresolved Maintenance Issues by including it separately as Requirement R5 and revising the language such that the responsible entity must demonstrate its efforts to correct Unresolved Maintenance Issues. Demonstrating the entity has initiated resolution can include such things as documentation of a work order, replacement component order, invoice, or purchase order, etc… Producing evidence of this nature would then indicate adherence to the requirement.		
Constellation Energy Commodities Group	No	As R3 is currently written, Constellation Energy Commodities Group is concerned that this requirement may decrease the reliability of the BES under certain circumstances. The severity of the "deficiency" found will dictate the method and timing of a "follow up correction action". For a generator, the corrective action may not be "initiated" until the next planned outage, which may be a few years. However, R3 suggests that to comply, a generation site may have to extend an outage or take a forced and unplanned outage, to perform the corrective action. This would decrease the available resources in a given BA's footprint and potentially decrease the reliability of the BES.
Response: Thank you for your comment. **PRC-005-2 only requires the entity "… *initiate resolution*" of the issue found. The SDT recognizes that performance of the activities necessary to resolve an issue are entirely dependent upon the circumstances surrounding that issue and, consequently, will require varying amounts of resources and time to complete the process. The SDT has clarified the intent of the requirement to initiate resolution of Unresolved Maintenance Issues by including it separately as Requirement R5 and revising the language such that the responsible entity must demonstrate its efforts to correct Unresolved Maintenance Issues. Demonstrating the entity has initiated resolution can include such things as documentation of a work order, replacement component order, invoice, or purchase order, etc… Producing evidence of this nature would then indicate adherence to the requirement.**		
PNGC Comment Group	No	
Central Lincoln		Either term works if defined properly.

Organization	Yes or No	Question 2 Comment
Response: Thank you for your comment.		

3. In response to comments, the SDT revised the previous "3 calendar months" interval to "4 calendar months" for communications systems and station dc supply. Do you agree with this change? If you do not agree, please provide specific suggestions for improvement.

Summary Consideration: Most commenters agreed with the change; however, several commenters suggested further extension of these intervals. The SDT did not make any further changes to those intervals, explaining their belief that the established intervals are appropriate maximum intervals for this continent-wide standard. A few commenters continued to object to the establishment of maximum allowable intervals as specified in FERC Order 693; the SDT did not adopt any related suggestions, and instead reminded the commenters of FERC's directives.

Organization	Yes or No	Question 3 Comment
CPS Energy	Affirmative Ballot	The 4 month maintenance and testing interval for station DC supply is too short based on programs that have been in service for many years where twelve months have been proven as reliable for operation.
Response: Thank you for your comments **This 4 month interval is an "inspect and verify" activity not testing. FERC Order 693 and the approved SAR direct the SDT to develop a standard with maximum allowable intervals and minimum maintenance activities. The SDT believes that the intervals established within the Tables are appropriate as continent-wide maximum allowable intervals, with due consideration for any monitoring functionality that may be present (per Table 1-4f).**		
Occidental Chemical	Affirmative Ballot	In response to comments, the SDT revised the previous "3 calendar months" interval to "4 calendar months" for communications systems and station dc supply. Do you agree with this change? If you do not agree, please provide specific suggestions for improvement. Yes. Ingleside Cogeneration LP agrees that the intervals on the activities in question should be extended to 4 calendar months. However on Page 20 of the Supplementary Reference document, the calculation of the next due date using units of "calendar months" is inconsistent with the calculation using a "calendar year". In the case of "calendar years", an activity must take place somewhere between Jan 1 and Dec 31. For "four calendar months", a follow-up activity must be performed within four months from the completion of the prior one. We believe that "four

Organization	Yes or No	Question 3 Comment
		calendar months" should be calculated in the same manner as a "calendar year". This means that an activity should take place at least once between January 1 and April 30; and repeated once during May 1 through August 31, and again between September 1 and December 31. The pattern would continue in ongoing years. Not only is this method consistent with the "calendar year" derivation, it allows the most flexibility in scheduling – especially if an unexpected event causes a delay. The vast majority of the maintenance activities will still take place at four months plus or minus a week or two; with an occasional outlier that adds minimal risk to reliability.
Response: Thank you for your comments. **Section 7.1 of the Supplementary Reference and FAQ document has been modified in consideration of your comment.**		
Wisconsin Electric Power Co. Wisconsin Electric Power Marketing	Affirmative Ballot	Focusing on batteries which are required to be done on a time-based maintenance program: 1. The big picture is that it is not just testing anymore - there are many more mandated tasks to be performed - Table 1-4(a). - Verifications & inspections are now part of the plan criteria, and have been moved from 3 months to a 4 month maximum interval. 2. We would like to see clarification on what is meant by the extent of 4 months. Is it by the end of the same calendar day or the previous calendar day, four months later; or is it 120 days or what? Could plan to manage to every 3 months, but not greater than 4 months. Same for Battery testing - manage to 1 year, but not greater than 18 months. 3. What is meant by battery continuity? Is battery float current an acceptable test methodology? It is not defined as clearly as an "impedance" or "resistance" test.
Response: Thank you for your comments. **1. The SDT believes that all of the maintenance activities within the "definition" of PSMP and as listed in the Tables are necessary components of an effective PSMP. Testing alone cannot assure that the Protection System components are in good working order.** **2. Section 7.1 of the Supplementary Reference and FAQ document provides an expanded discussion of this topic, and has been revised to add further clarity.**		

Organization	Yes or No	Question 3 Comment
3. "Continuity" can be tested via several methods, and is described in detail in Section 15.4 of the Supplementary Reference and FAQ document. Battery float current is one of the many methods discussed within the Supplementary Reference Document.		
PNGC Comment Group	Yes	We agree with this change. Smaller utilities, especially in the WECC region, in many cases have large territories to cover with limited resources. In many instances sub-stations are inaccessible during the winter and the 4 month interval will assist these smaller entities in getting the work done.
Response: Thank you for your comment		
MRO's NERC Standards Review Forum	Yes	We agree 4 calendar months is better than 3 Calendar months. The 4 month activities should be removed from Tables 1-4(a, b, c, d). These requirements are blurring the distinction between a best practice and functionally verifying the component. IEEE already sets the industries best practices, if a Reliability Standard includes best maintenance practices it is encroaching on IEEE's ability to keep the industry informed and optimized. The Standard Drafting Team should restrain itself to only making requirements that functionally verify components and initiate corrective action wherever possible. We recommend that this time frame be a maximum of 6 Calendar Months which will allow entities to establish their own time frame based on the seasonal changes that occur where the batteries are located.
Response: Thank you for your comments. **Station dc supply (including station batteries) must perform properly for the Protection System to function correctly. In order to establish that station batteries are functioning properly, the SDT believes that all of the listed maintenance activities must be performed, within the specified maximum intervals, with due consideration for any monitoring functionality that may be present. The SDT has drawn from the relevant IEEE standards (and other sources) to determine those activities that it has deemed appropriate to assure proper performance of the station battery. The SDT specifically believes that the 4-month maximum interval is proper for these activities for unmonitored DC supply systems and is consistent with the prevailing industry practice.**		
Tacoma Power	Yes	A similar change in interval should be applied to intervals of "6 calendar months".

Organization	Yes or No	Question 3 Comment
Response: Thank you for your comments **The SDT believes that the six-month interval is appropriate.**		
Nebraska Public Power District	Yes	We agree 4 calendar months is better than 3 Calendar months. The 4 month activities should be removed from Tables 1-4 (a, b, c, d). These requirements are blurring the distinction between a best practice and functionally verifying the component. IEEE already sets the industries best practices, if a Reliability Standard includes best maintenance practices it is encroaching on IEEE's ability to keep the industry informed and optimized. The Standard Drafting Team should restrain itself to only making requirements that functionally verify components and initiate corrective action wherever possible.
Response: Thank you for your comments. **Station dc supply (including station batteries) must perform properly for the Protection System to function correctly. In order to establish that station batteries are functioning properly, the SDT believes that all of the listed maintenance activities must be performed, within the specified maximum intervals. The SDT has drawn from the relevant IEEE standards (and other sources) to determine those activities that it has deemed appropriate to assure proper performance of station batteries. The SDT specifically believes that the 4-month maximum interval is proper for these activities for unmonitored DC supply systems and is consistent with the prevailing industry practice.**		
Central Lincoln	Yes	Thank you for making this change. As we pointed out in draft 2, a three month maximum would require a bi-monthly target to allow for contingencies; increasing maintenance from four times a year (per the IEEE battery standards) to six.
Response: Thank you for your comment.		
Ameren	Yes	Our experience with a very large number of communication systems and station dc supplies substantiates an even longer interval as sufficient for reliable Protection Systems.
Response: Thank you for your comment. If your experience suggests that longer intervals for communications systems will produce appropriate performance, you may employ performance-based maintenance (per the draft standard). However, SDT		

Organization	Yes or No	Question 3 Comment
believes that all of the listed maintenance activities for station dc supply must be performed, within the specified maximum intervals, with due consideration for any monitoring functionality that may be present.		
Ingleside Cogeneration LP	Yes	Ingleside Cogeneration LP agrees that the intervals on the activities in question should be extended to 4 calendar months. However on Page 20 of the Supplementary Reference document, the calculation of the next due date using units of "calendar months" is inconsistent with the calculation using a "calendar year". In the case of "calendar years", an activity must take place somewhere between Jan 1 and Dec 31. For "four calendar months", a follow-up activity must be performed within four months from the completion of the prior one. We believe that "four calendar months" should be calculated in the same manner as a "calendar year". This means that an activity should take place at least once between January 1 and April 30; and repeated once during May 1 through August 31, and again between September 1 and December 31. The pattern would continue in ongoing years. Not only is this method consistent with the "calendar year" derivation, it allows the most flexibility in scheduling - especially if an unexpected event causes a delay. The vast majority of the maintenance activities will still take place at four months plus or minus a week or two; with an occasional outlier that adds minimal risk to reliability.
Response: Thank you for your comments. Section 7.1 of the Supplementary Reference and FAQ document provides an expanded discussion of this topic, and has been revised to add further clarity.		
BGE	Yes	BGE appreciates the SDT demonstrating flexibility by extending these maintenance intervals.
Response: Thank you for your comment.		
Springfield Utility Board	Yes	This change has no impact on how Springfield Utility Board currently operates.
Response: Thank you for your comment.		
MidAmerican Energy	Yes	None

Organization	Yes or No	Question 3 Comment
Company		
Bonneville Power Administration	Yes	
Dominion	Yes	
FirstEnergy	Yes	
Southwest Power Pool Standards Review Group	Yes	
Florida Municipal Power Agency	Yes	
Pepco Holdings Inc & Affiliates	Yes	
ACES Power Collaborators	Yes	
Southern Company Generation	Yes	
Westar Energy	Yes	

Organization	Yes or No	Question 3 Comment
Progress Energy	Yes	
Western Area Power Administration	Yes	
PacifiCorp	Yes	
Saft America, Inc.	Yes	
Exelon	Yes	
Dynegy Inc.	Yes	
Lincoln Electric System	Yes	
Entergy Services	Yes	
Independent Electricity System Operator	Yes	
Liberty Electric Power LLC	Yes	
American Transmission	Yes	

Organization	Yes or No	Question 3 Comment
Company		
Southern Company Transmission	Yes	
ITC Holdings	Yes	
Oncor Electric Delivery Company LLC	Yes	
City of Austin dba Austin Energy	Yes	
Northeast Utilities	Yes	
Manitoba Hydro	No	Manitoba Hydro maintains that the battery inspection interval should be extended to 6 months. The 4 month interval is too frequent based on our experience and while IEEE std 450 (which seems to be the basis for table 1-4) does recommend intervals, it also states that users should evaluate these recommendations against their own operating experience. Our experience shows that 6 month battery inspections are more than adequate to maintain system reliability.Manitoba Hydro has more than ten years of experience using its existing battery inspection intervals, and Manitoba Hydro's reliability data has proven that the 6 month inspection interval is suitable for Manitoba Hydro. Manitoba Hydro's battery maintenance tasks were derived from a reliability study of Manitoba Hydro stationary batteries, and the tasks and intervals are suitable given Manitoba Hydro's installed plant, design criteria, climate, and reliability performance. A more frequent inspection interval might be more suitable to specific utilities with material differences in climate, design, installed apparatus, and performance, but it is not suitable for Manitoba Hydro

Organization	Yes or No	Question 3 Comment
		and may be more than is required for many other utilities. To use a more frequent inspection interval would significantly penalize Manitoba Hydro which has been diligently performing battery inspections for many years, with no resulting increase in reliability. With the 4 month battery check frequency and no allowance for a grace period, there may be a negative impact on reliability caused by diverting resources away from projects that are critical to reliability to meet this maintenance interval.
Response: Thank you for your comments. **This 4 month interval is an "inspect and verify" activity not testing. FERC Order 693 and the approved SAR direct the SDT to develop a standard with maximum allowable intervals and minimum maintenance activities. The SDT believes that the intervals established within the Tables are appropriate as continent-wide maximum allowable intervals, with due consideration for any monitoring functionality that may be present (per Table 1-4f).**		
Arizona Public Service Company	No	APS has been testing batteries nominally every 4 months plus 25% for over 20 years with no adverse consequences. Requiring a maximum of testing every 4 months doesn't allow for any flexibility, would require an additional 400 tests per year and APS does not consider the 4 months a maximum time limit for battery testing.
Response: Thank you for your comments. **This 4 month interval is an "inspect and verify" activity not testing. FERC Order 693 and the approved SAR direct the SDT to develop a standard with maximum allowable intervals and minimum maintenance activities. The SDT believes that the intervals established within the Tables are appropriate as continent-wide maximum allowable intervals, with due consideration for any monitoring functionality that may be present (per Table 1-4f).**		
Utility Services, Inc	No	The standard should provide guidance what tasks need to be accomplished for compliance and not mandates on specifics like this. Registered Entities should be left to determine the appropriate intervals based upon their experience and good utility practices.
Response: Thank you for your comments **FERC Order 693 and the approved SAR direct the SDT to develop a standard with maximum allowable intervals and minimum**		

Organization	Yes or No	Question 3 Comment
maintenance activities. The SDT believes that the intervals established within the Tables are appropriate as continent-wide maximum allowable intervals, with due consideration for any monitoring functionality that may be present. If an entity's experience is that some components require less-frequent maintenance than specified in the Tables, a performance-based program in accordance with Requirement R2 and Attachment A is an option unless specifically precluded.		
American Electric Power	No	Though we agree with extending the interval from what it was previously, AEP recommends that the interval in Table 1-2 for Communications Systems be increased to 6 months.
Response: Thank you for your comments **The SDT believes that the revised 4-month maximum interval is proper for unmonitored communications systems.**		
Tennessee Valley Authority	No	

4. The SDT extracted the maintenance activities and intervals for distributed UFLS and UVLS systems from Table 1-1 through 1-5 and placed them into a new Table 3 to more clearly illustrate the requirements related to these systems. Do you agree with this change? If you do not agree, please provide specific suggestions for improvement.

Summary Consideration: Most commenters appreciated the break-out of distributed UFLS/UVLS maintenance activities into Table 3. Several commenters, however, continued to object to inclusion of this maintenance within the standard, and some questioned NERC's jurisdiction to address devices installed on the distribution system. The SDT consulted with NERC legal staff on the jurisdiction question, and cited the position from NERC Legal in responding that these devices are indeed within NERC's authority because they are installed for the reliability of the BES. Several commenters also objected to the requirements relating to periodic operation of electromechanical devices, maintenance of voltage and current sensing devices, and/or maintenance of the dc supply within the new Table 3, and the SDT provided responses supporting the SDT's belief that all of these activities are relevant and necessary for inclusion within the standard. Several other commenters suggested formatting changes, most of which were adopted. While considering these comments, the SDT also made assorted clarifying changes to Table 3.

Organization	Yes or No	Question 4 Comment
Occidental Chemical	Affirmative Ballot	The SDT extracted the maintenance activities and intervals for distributed UFLS and UVLS systems from Table 1-1 through 1-5 and placed them into a new Table 3 to more clearly illustrate the requirements related to these systems. Do you agree with this change? If you do not agree, please provide specific suggestions for improvement. Yes. We believe that distributed UFLS and UVLS relay systems have a very different operating purpose than those that are not distributed. It is appropriate to separate the maintenance activities and intervals for these relay systems.
Response: Thank you for your support.		
Southern Company Generation	Yes	1. Separating this classification of equipment into its own table is a good idea to make it easier for the owners of this equipment to figure out what they must do. 2. Consider also moving the UVLS note (found in column 1 of Tables 1-4a-d) into the header with

Organization	Yes or No	Question 4 Comment
		the other "UFLS and UVLS note" to simplify the table. The header note could read "Excludes UFLS and UVLS systems - see Table 1-4e for non-distributed UFLS and UVLS systems and see Table 3 for distributed UFLS and UVLS systems"). 3. Table 1-5: Need clarification on "continuity and energization or ability to operate". What does this mean? 4. For UF and UV schemes, Table 3 does not specifically state to check the alarm(s) to a control center (for monitored components). There are some references to Table 2 (i.e. See Table 2), but does that mean that you have to verify the alarm(s)? We think that the Table 2 details need to be included specifically in Table 3. Or, make it very clear that this test is required for UF and UV schemes.
Response: **1. Thank you for your support.** **2. Thank you for your comment, Table 1-4 (a, b, c, d) has been revised accordingly.** **3. This entry in Table 1-5 has been modified to "Control circuitry whose integrity is monitored and alarmed". Section 15.3 of the Supplementary Reference and FAQ document provides additional discussion on this topic.** **4. The SDT has revised the Table 2 for clarity.**		
Ameren	Yes	Please consistently state UFLS before UVLS; Table 1-4(e) differs from other parts of the standard.
Response: Thank you for your suggestion; the SDT has revised the standard.		
Northeast Utilities	Yes	The migration of the UFLS and UVLS requirements to Table 3 is appreciated. The Table 3 Component Attributes in rows 6 and 7 ("Control circuitry between the UFLS or UVLS relays and electromechanical lockout and/or tripping auxiliary devices" and Electromechanical lockout and/or tripping auxiliary devices associated only with UFLS or UVLS systems" respectively) do not identify that the trip coils are excluded. Although row 9 states "Trip coils of non-BES interrupting devices in UFLS or UVLS systems" do not have any period maintenance specified, our recommendation is to

Organization	Yes or No	Question 4 Comment
		annotate rows 6 and 7 to explicitly indicate the trip coils are excluded.
Response: Thank you for support. The SDT has revised Table 3 accordingly.		
MidAmerican Energy Company	Yes	None
Southern Company Transmission	Yes	For UF and UV schemes, Table 3 does not specifically state to check the alarm(s) to a control center (for monitored components). There are some references to Table 2 (i.e. See Table 2), but does that mean that you have to verify the alarm(s)? I think Table 2 details need to be included specifically in Table 3. Or make it very clear that this test is required for UF and UV schemes.
Response: Thank you for your comment. The SDT has revised Table 2 for clarity.		
Ingleside Cogeneration LP	Yes	We believe that distributed UFLS and UVLS relay systems have a very different operating purpose than those that are not distributed. It is appropriate to separate the maintenance activities and intervals for these relay systems.
Response: Thank you for your support.		
Springfield Utility Board	Yes	Although numerous tables can become overwhelming to navigate, it is far less ambiguous if specific systems are spelled out in separate and distinct tables.
Response: Thank you for your support.		
Ameren	Yes	Please consistently state UFLS before UVLS; Table 1-4(e) differs from other parts of the standard.
Response: Thank you for your suggestion. The SDT has revised the standard.		
Oncor Electric Delivery	Yes	

Organization	Yes or No	Question 4 Comment
Company LLC		
City of Austin dba Austin Energy	Yes	
PNGC Comment Group	Yes	
Bonneville Power Administration	Yes	
Dominion	Yes	
FirstEnergy	Yes	
Southwest Power Pool Standards Review Group	Yes	
City of Austin dba Austin Energy	Yes	
Pepco Holdings Inc & Affiliates	Yes	
MRO's NERC Standards	Yes	

Organization	Yes or No	Question 4 Comment
Review Forum		
ACES Power Collaborators	Yes	
Arizona Public Service Company	Yes	
Westar Energy	Yes	
Tacoma Power	Yes	
Progress Energy	Yes	
Western Area Power Administration	Yes	
PacifiCorp	Yes	
Saft America, Inc.	Yes	
Nebraska Public Power District	Yes	
Exelon	Yes	
Texas Reliability Entity	Yes	

Organization	Yes or No	Question 4 Comment
Central Lincoln	Yes	
Dynegy Inc.	Yes	
American Electric Power	Yes	
Lincoln Electric System	Yes	
Entergy Services	Yes	
Independent Electricity System Operator	Yes	
Liberty Electric Power LLC	Yes	
Manitoba Hydro	Yes	
American Transmission Company	Yes	
Utility Services, Inc	Yes	

Organization	Yes or No	Question 4 Comment
ITC Holdings	Yes	
Flathead Electric Cooperative	Negative Ballot	I appreciate the drafting team's effort to separate requirements for distributed UFLS, however fundamentally it is unclear how mandatory and enforceable requirements can be applied to non-BES elements as there is no statutory authority over local distribution networks.
Response: Thank you for comment. In regards to your concern, the SDT received the following position from NERC Legal: **"While UFLS and UVLS equipment are located on the distribution network, their job is to protect the Bulk Electric System. This is not beyond the scope of NERC's 215 authority.** **FPA section 215(a) definitions section defines "bulk-power system as (A) facilities and control systems necessary for operating an interconnected electric energy transmission network (or any portion thereof)." That definition then is limited by a later statement which adds the term bulk-power system "does not include facilities used in the local distribution of electric energy." Also, section 215 also covers users, owners, and operators of bulk-power facilities.** **UFLS and UVLS (when the UVLS is installed to prevent system voltage collapse or voltage instability for BES reliability) are not "used in the local distribution of electric energy" despite their location on local distribution networks. Further, if UFLS/UVLS facilities were not covered by the Reliability Standards, then in order to protect the integrity of the BES during under-frequency or under-voltage events, that load would have to be shed at the transmission bus to ensure the load-generation balance and voltage stability is maintained on the BES."**		
Lakeland Electric	Negative Ballot	The standard reaches further into the distribution system for UFLS and UVLS. It will be burdensome to present all the evidence of distribution class protection system maintenance and testing at audits.
Response: The existing standards (PRC-008 & PRC-011) already require maintenance and testing of components of UFLS and UVLS protection systems, including those installed to operate distribution-level interrupting devices.		
Beaches Energy	Negative	The standard reaches further into the distribution system than we would like for UFLS and UVLS

Organization	Yes or No	Question 4 Comment
Services	Ballot	(Table 3). We have two parts to this concern. First, it will be somewhat onerous to present all the evidence of distribution class protection system maintenance and testing at audits. And second, our biggest concern is in the testing required to "exercise" a lockout or tripping relay. This may require installation of test blocks to allow such exercising of the lockout or tripping relay without tripping the distribution circuit, and such a test could be difficult to perform without impacting customer continuity of service if the lockout/tripping relay for the UFLS is the same as the lockout/tripping relay for distribution fault protection.
Response: Thank you for your comment. **First, the existing standards (PRC-008 & PRC-011) already require maintenance and testing of components of UFLS and UVLS protection systems, including those installed to operate distribution-level interrupting devices.** **Second, the UVLS and UFLS systems are included as part of the Project 2007-17 Standard Authorization Request (SAR). The SDT believes that electromechanical devices, such as auxiliary or lockout relays which contain “moving parts”, need periodic operation in order to remain reliable. As such, these devices are required to be exercised at the 12 year interval for UVLS and UFLS systems. The SDT recognizes the risk of human error trips when working with testing of lockout devices but believes these risks can be managed.**		

Organization	Yes or No	Question 4 Comment
Florida Keys Electric Cooperative Assoc.	Negative Ballot	The standard reaches further into the distribution system than we would like for UFLS and UVLS (Table 3). We have two parts to this concern. First, it will be somewhat onerous to present all the evidence of distribution class protection system maintenance and testing at audits. And second, our biggest concern is in the testing required to "exercise" a lockout or tripping relay. This may require installation of test blocks to allow such exercising of the lockout or tripping relay without tripping the distribution circuit, and such a test could be difficult to preform without impacting customer continuity of service if the lockout/tripping relay for the UFLS is the same as the lockout/tripping relay for distribution fault protection. However, most of FMPA's members have microprocessor-based relays for distribution circuits with the UFLS / UVLS embedded within the microprocessor based relay where the path from the UFLS / UVLS relay to the lockout / tripping relay is internal to the micro-processor based relay, so, testing the UFLS/UVLS relay will at the same time test the internal lockout / switching relay. However, for older electro-mechanical UFLS schemes, this type of testing could be problematic.
Response: Thank you for your comment. **First, the existing standards (PRC-008 & PRC-011) already require maintenance and testing of components of UFLS and UVLS protection systems, including those installed to operate distribution-level interrupting devices.** **Second, the UVLS and UFLS systems are included as part of the Project 2007-17 Standard Authorization Request (SAR). The SDT believes that electromechanical devices, such as auxiliary or lockout relays which contain “moving parts”, need periodic operation in order to remain reliable. As such, these devices are required to be exercised at the 12 year interval for UVLS and UFLS systems. The SDT recognizes the risk of human error trips when working with testing of lockout devices but believes these risks can be managed.**		

Organization	Yes or No	Question 4 Comment
Florida Municipal Power Agency	Negative Ballot Negative Poll	The standard reaches further into the distribution system than we would like for UFLS and UVLS (Table 3). We have two parts to this concern. First, it will be somewhat onerous to present all the evidence of distribution class protection system maintenance and testing at audits. And second, our biggest concern is in the testing required to "exercise" a lockout or tripping relay. This may require installation of test blocks to allow such exercising of the lockout or tripping relay without tripping the distribution circuit, and such a test could be difficult to preform without impacting customer continuity of service if the lockout/tripping relay for the UFLS is the same as the lockout/tripping relay for distribution fault protection. However, most of FMPA's members have microprocessor-based relays for distribution circuits with the UFLS / UVLS embedded within the microprocessor based relay where the path from the UFLS / UVLS relay to the lockout / tripping relay is internal to the micro-processor based relay, so, testing the UFLS/UVLS relay will at the same time test the internal lockout / switching relay. However, for older electro-mechanical UFLS schemes, this type of testing could be problematic. Borderline concerning whether this causes us to vote Negative or not. As a result, FMPA recommends a Negative vote with the second and third comments, emphasizing that it is the second comment that causes us to vote negative but we also would like the 3rd comment addressed. Feedback appreciated. Vote and comments are due next Wednesday, 9/28.

Response: Thank you for your comment.

First, the existing standards (PRC-008 & PRC-011) already require maintenance and testing of components of UFLS and UVLS protection systems, including those installed to operate distribution-level interrupting devices.

Second, the UVLS and UFLS systems are included as part of the Project 2007-17 Standard Authorization Request (SAR). The SDT believes that electromechanical devices, such as auxiliary or lockout relays which contain “moving parts”, need periodic operation in order to remain reliable. As such, these devices are required to be exercised at the 12 year interval for UVLS and UFLS systems. The SDT recognizes the risk of human error trips when working with testing of lockout devices but believes these risks can be managed.

Organization	Yes or No	Question 4 Comment
Florida Municipal Power Pool	Negative Ballot Negative Poll	The standard reaches further into the distribution system than we would like for UFLS and UVLS (Table 3). We have two parts to this concern. First, it will be somewhat onerous to present all the evidence of distribution class protection system maintenance and testing at audits. And second, our biggest concern is in the testing required to "exercise" a lockout or tripping relay. This may require installation of test blocks to allow such exercising of the lockout or tripping relay without tripping the distribution circuit, and such a test could be difficult to preform without impacting customer continuity of service if the lockout/tripping relay for the UFLS is the same as the lockout/tripping relay for distribution fault protection. However, most of FMPA's members have microprocessor-based relays for distribution circuits with the UFLS / UVLS embedded within the microprocessor based relay where the path from the UFLS / UVLS relay to the lockout / tripping relay is internal to the micro-processor based relay, so, testing the UFLS/UVLS relay will at the same time test the internal lockout / switching relay. However, for older electro-mechanical UFLS schemes, this type of testing could be problematic. Borderline concerning whether this causes us to vote Negative or not.
Response: Thank you for your comment. **First, the existing standards (PRC-008 & PRC-011) already require maintenance and testing of components of UFLS and UVLS protection systems, including those installed to operate distribution-level interrupting devices.** **Second, the UVLS and UFLS systems are included as part of the Project 2007-17 Standard Authorization Request (SAR). The SDT believes that electromechanical devices, such as auxiliary or lockout relays which contain “moving parts”, need periodic operation in order to remain reliable. As such, these devices are required to be exercised at the 12 year interval for UVLS and UFLS systems. The SDT recognizes the risk of human error trips when working with testing of lockout devices but believes these risks can be manageds.**		
Lincoln Electric System	Negative Ballot	Please see comments submitted in addition to the following comment. LES recommends the standard drafting team clarify the expected maintenance activities for BES related batteries that also serve UFLS systems. In particular, what would be the required maintenance activities for a battery bank serving both BES transmission elements and UFLS elements? Table 1.4 clearly

Organization	Yes or No	Question 4 Comment
		excludes UFLS elements and Table 3 indicates it only applies to "non-BES interrupting devices". As such, if a joint use battery is excluded from Table 1.4 because of its association with UFLS, BES related batteries would have no place in any of the tables.
Response: Thank you for your comment. **The SDT responded to your other comments in the sections where they were submitted.** **A battery bank serving both BES and UFLS/UVLS protection systems would be maintained per table 1-4. A battery bank that serves only distributed UFLS or UVLS system would be maintained per table 3.** **The headers of the various sections of Table 1-4 now exclude station dc supply that is used <u>only</u> for UFLS/UVLS from Table 1-4.**		
CenterPoint Energy	No	1. For the "Control circuitry between the UFLS or UVLS relays and electromechanical lockout and/or tripping auxiliary devices", the Table 3 requirement is to "Verify the path from the relay to the lockout and/or tripping auxiliary relay (including essential supervisory logic)" every 12 calendar years. CenterPoint Energy recommends this requirement be revised to "No periodic maintenance specified". CenterPoint Energy believes that wire checking a panel is a commissioning task, not a preventive maintenance task. CenterPoint Energy performs such checks on new stations and whenever expansion or modification of existing stations dictates such testing. 2. In addition, CenterPoint Energy recommends the requirement in Table 3 to "Verify that current and/or voltage signal values are provided to the protective relays" every 12 years be revised to "No periodic maintenance specified". 3. Likewise, we recommend the requirement in Table 3 to "Verify Protection System dc supply voltage" every 12 years be revised to "No periodic maintenance specified". Preventive maintenance tasks such as the three above are unnecessary for distributed UFLS and UVLS system components. The overriding performance, or "risk-based", NERC Reliability Standards for UFLS are PRC-006 and PRC-007 where an entity is required to shed their obligated firm load amount.

Organization	Yes or No	Question 4 Comment
Response: Thank you for your comment. **1. While much of the control circuitry associated with a distribution device is regularly exercised, the SDT believes that the control circuitry associated directly with UFLS/UVLS that are applied for BES reliability need be periodically verified to assure that these components will function properly when called upon to do so.** **2. The SDT believes that the voltage/current signals that support proper operation of UFLS/UVLS that are applied for BES reliability need be periodically verified to assure that these components will function properly when called upon to do so. The specific degree of this verification is constrained within Table 3 to those activities necessary to assure proper operation of the UFLS/UVLS.** 3. **The SDT believes that the station dc supply that supports only proper operation of UFLS/UVLS that are applied for BES reliability need be periodically verified to assure that these components will function properly when called upon to do so. The specific degree of this verification is constrained within Table 3 to only periodic measurement of the dc voltage.**		
BGE	No	Although BGE does not disagree with moving the distributed UFLS/UVLS maintenance activities and intervals into the new Table-3, BGE requests further clarification from the SDT on how to correctly interpret the headings and content of this table.
Response: Thank you for your support. Table 3 has been modified since it was last released for comment. Table 3 should be used to determine maintenance activities and intervals for distributed UFLS and UVLS systems. Distributed systems are further elaborated upon in the Supplementary Reference and FAQ document, Section 15.7.		
Constellation Power Generation	No	Moving the UFLS and UVLS systems from Tables 1-1 through 1-5 into a separate Table 3 is a useful improvement in illustrating the requirements. However, our objection is not really with the format, it is will the content of the Tables. From a generation perspective, the maintenance intervals and activities described in all of the Tables are too prescriptive and we are concerned that they may conflict with the existing PSMPs built by Registered Entities based on years of operational experience with the testing methods and testing frequencies that work best for the specific asset. In the worst case, the specifics dictated in the Tables may move Entities away from more stringent PSMPs that are currently in practice. For this reason, Constellation suggests that the drafting team revisit the concept of the Tables to better balance to convey useful guidance without creating a

Organization	Yes or No	Question 4 Comment
		compliance requirement that may be contrary to improved reliability. The Registered Entity should be given more flexibility to dictate how a protection system component should be tested, and at what frequency. Lastly, the technical manpower and compliance documentation demands to implement a performance based protection system maintenance program are so onerous that it is highly unlikely that any small generation entity would use it.
Response: Thank you for your comment. **FERC Order 693 and the approved SAR assign the SDT to develop a standard with maximum allowable intervals and minimum maintenance activities. The SDT believes that the intervals established within the Tables are appropriate as continent-wide maximum allowable intervals, with due consideration for any monitoring functionality that may be present. The ability to utilize performance-based maintenance is provided for those entities who wish to pursue it; it is understood that many entities may instead choose to simply implement a PSMP based on the Tables.**		
Constellation Energy Commodities Group	No	Moving the UFLS and UVLS systems from Tables 1-1 through 1-5 into a separate Table 3 is a useful improvement in illustrating the requirements. However, our objection is not really with the format, it is will the content of the Tables. From a generation perspective, the maintenance intervals and activities described in all of the Tables are too prescriptive and we are concerned that they may conflict with the existing PSMPs built by Registered Entities based on years of operational experience with the testing methods and testing frequencies that work best for the specific asset. In the worst case, the specifics dictated in the Tables may move Entities away from more stringent PSMPs that are currently in practice. For this reason, Constellation suggests that the drafting team revisit the concept of the Tables to better balance to convey useful guidance without creating a compliance requirement that may be contrary to improved reliability. The Registered Entity should be given more flexibility to dictate how a protection system component should be tested, and at what frequency. Lastly, the technical manpower and compliance documentation demands to implement a performance based protection system maintenance program are so onerous that it is highly unlikely that any small generation entity would use it.
Response: Thank you for your comment. **FERC Order 693 and the approved SAR assign the SDT to develop a standard with maximum allowable intervals and minimum**		

Organization	Yes or No	Question 4 Comment
maintenance activities. The SDT believes that the intervals established within the Tables are appropriate as continent-wide maximum allowable intervals, with due consideration for any monitoring functionality that may be present. The ability to utilize performance-based maintenance is provided for those entities who wish to pursue it; it is understood that many entities may instead choose to simply implement a PSMP based on the Tables.		
Florida Municipal Power Agency	No	We like the new Table 3, but, have remaining concerns. The standard reaches further into the distribution system than we would like for UFLS and UVLS. We have two parts to this concern. First, it will be somewhat onerous to present all the evidence of distribution class protection system maintenance and testing at audits. And second, our biggest concern is in the testing required to "exercise" a lockout or tripping relay. This may require installation of test blocks to allow such exercising of the lockout or tripping relay without tripping the distribution circuit, and such a test could be difficult to perform without impacting customer continuity of service if the lockout/tripping relay for the UFLS is the same as the lockout/tripping relay for distribution fault protection. However, most of FMPA's members have microprocessor-based relays for distribution circuits with the UFLS / UVLS embedded within the microprocessor based relay where the path from the UFLS / UVLS relay to the lockout / tripping relay is internal to the micro-processor based relay, so, testing the UFLS/UVLS relay will at the same time test the internal lockout / switching relay. However, for older electro-mechanical UFLS schemes, this type of testing could be problematic.
Response: Thank you for your comment. **First, the existing standards (PRC-008 & PRC-011) already require maintenance and testing of components of UFLS and UVLS protection systems, including those installed to operate distribution-level interrupting devices.** **Second, the UVLS and UFLS systems are included as part of the Project 2007-17 Standard Authorization Request (SAR). The SDT believes that electromechanical devices, such as auxiliary or lockout relays which contain "moving parts", need periodic operation in order to remain reliable. As such, these devices are required to be exercised at the 12 year interval for UVLS and UFLS systems. The SDT recognizes the risk of human error trips when working with testing of lockout devices but believes these risks can be managed.**		

Organization	Yes or No	Question 4 Comment
NERC Staff Technical Review	No	We agree in principle with the change; however, we have identified discrepancies among these tables with respect to the reference to UFLS and UVLS systems. The headings in Tables 1-1 through 1-4(b) and Table 1-5 refer to “Excluding distributed UFLS and UVLS”; Table 1-4(c) refers to “Excluding UFLS and non-distributed UVLS”; while Table 1-4(d) refers to “Excluding UFLS and distributed UVLS.” We believe the drafting team intended for consistency among these tables and that the intent is to exclude distributed UFLS and distributed UVLS schemes as opposed to distributed UFLS and all UVLS schemes. To make this clear we recommend changing the second line in the heading of each of these tables to “Excluding distributed UFLS and distributed UVLS.” Corresponding changes should be made in the “Component Attributes” sections of Tables 1-4(a) through 1-4(e) and to the title of Table 3.
Response: Thank you for your comment. The standard has been modified as you suggest.		
Tennessee Valley Authority	No	

5. The SDT has revised the "Supplementary Reference and FAQ" document which is supplied to provide supporting discussion for the Requirements within the standard. Do you agree with the changes? If not, please provide specific suggestions for change.

Summary Consideration: Many commenters objected to Requirement R3 and to the explanation that entities would be held to compliance on "either the Tables or their PSMP, whichever is more stringent". In response to these comments, the SDT modified the standard to remove Requirement R1 part 1.3, and revised Requirement R3 so that, for time-based programs, entities shall comply with the Tables rather than their PSMP. The SDT added Requirement R4 to address performance-based maintenance, and added Requirement R5 to address Unresolved Maintenance Issues. The Supplementary Reference and FAQ document was updated to reflect these changes.

Several commenters questioned the inclusion of the dc control circuitry for sudden pressure relays even though the relays themselves are excluded from the definition of "Protection System"; the SDT reiterated its position that this dc control circuitry is indeed included because the dc control circuitry is associated with protective functions. No change was made to the standard based on these comments.

Numerous commenters suggested minor revisions or clarifying text for the Supplementary Reference and FAQ document. These changes were generally adopted.

Organization	Yes or No	Question 5 Comment
Ameren Services	Affirmative Ballot	1. Although the explanation of 'Restore' is enlightening on page 12, 'Restore' no longer appears in the PS Maintenance definition in the last few drafts. 2. We disagree with the added burden of retaining maintenance records for removed or replaced equipment. This will actually reduce reliability because of the confusion it can cause as to what

Organization	Yes or No	Question 5 Comment
		equipment is providing BES protection. At most, only the last maintenance date of the removed or replaced component should be retained if there's really a need to prove that the interval was met regarding the BES protection. 3. Remove 'Reverse power relays' from the list on page 32. They provide thermal of the steam turbine, not electrical protection of the generator. 4. Now that FERC has approved the Project 2009-17 Interpretation, please acknowledge more directly in the Supplement that the 'transmission Protection System' that is now approved. NERC interprets "transmission Protection System," as it appears in Requirements R1 and R3 of PRC-004-1 and Requirements R1 and R2 of PRC-005-1, to mean "any Protection System that is installed for the purpose of detecting faults on transmission elements (lines, buses, transformers, etc.) identified as being included in the Bulk Electric System (BES) and trips an interrupting device that interrupts current supplied directly from the BES". 5. Please consistently state UFLS before UVLS; Table 1-4(e) differs from other parts of the standard.

Response:

1. **Thank you for your suggestion; the SDT has revised the Supplementary Reference and FAQ document to remove the "restore" reference from the definition.**
2. **The records for removed/replaced equipment need to be retained to provide documentation that you were in compliance for the entire compliance monitoring period.**
3. **The SDT agrees that for many steam units, reverse power relays provide alarm only of a condition which could result in eventual overheating of steam turbine components. However, for many combustion turbine generators, a reverse power condition can lead to imminent failure of teeth on the speed reduction gear and thus, reverse power relays on combustion turbine generators are frequently wired as a direct trip to the generator breaker to immediately remove the motoring condition. Furthermore, in the Supplementary Reference document, the preface to the list of relays to which you refer is as follows: "Examples of typical devices and systems that may directly trip the generator, or trip through a lockout relay may include but are not necessarily limited to:". The SDT was attempting to provide a list of possible relays that might need to be included. The list is not meant to be all inclusive nor do all relays of the types on the list necessarily need to be included in an**

Organization	Yes or No	Question 5 Comment
entity's PSMP. **4. The SDT believes that the Applicability as stated in PRC-005-2 is correct and that it supports the reliability of the BES. The SDT observes that the approved Interpretation addresses the term, "transmission Protection System", and notes that this term is not used within PRC-005-2; thus the interpretation does not apply to PRC-005-2. PRC-005-2 specifically addresses "Protection Systems that are installed for the purpose of detecting faults on BES Elements." Please see Section 2.3 of the Supplementary Reference and FAQ document for additional discussion.** **5. Thank you for your suggestion; the SDT has revised the standard.**		
Madison Gas and Electric Co.	Affirmative Ballot	Note that the Guidance document over states that an entity will be held accountable for have a more restrictive PMSP than the maximum intervals in attachment 1. Please review FERC Order 693, section 278 which states: "While we appreciate that many entities may perform at a higher level than that required by the Reliability Standards, and commend them for doing so, the Commission is focused on what is required under the Reliability Standards, and we do not require that they exceed the Reliability Standards".
Response: Thank you for your comment. The standard and the Supplementary Reference and FAQ document have been changed to address your concerns. Specifically, Requirement R1 part 1.3 has been removed; Requirement R3 has been revised so that, for time-based programs, entities shall comply with the tables; Requirement R4 has been added to address performance-based maintenance, and Requirement R5 has been added to address Unresolved Maintenance Issues.		
Northeast Power Coordinating Council, Inc.	Affirmative Ballot	An issue was raised here in the Northeast regarding requiring an entity to adhere to their protection system maintenance program, PSMP. If an entity has a maintenance program in place that has shorter intervals, i.e. more stringent than those in the appendix of the standard, and the entity misses completing his maintenance, the entity will be found non-compliant irrespective of the entity to demonstrate they still were within the longer intervals listed in the actual standard. NPCC would suggest that the SDT consider revising this to only result in a non-compliance assessment result if an entity missed the intervals in the appendix of the standard not those specified in their PSMP. The concern is that some entities will forego more stringent programs and revise their documents "downward" in order to ensure compliance at the potential for a reduction in reliability. There is no mechanism currently in place to preclude entities from doing this.

Organization	Yes or No	Question 5 Comment
Response: Thank you for your comment. The standard and the Supplementary Reference and FAQ document have been changed to address your concerns. Specifically, Requirement R1 part 1.3 has been removed; Requirement R3 has been revised so that, for time-based programs, entities shall comply with the tables; Requirement R4 has been added to address performance-based maintenance, and Requirement R5 has been added to address Unresolved Maintenance Issues.		
Occidental Chemical	Affirmative Ballot	The SDT has revised the "Supplementary Reference" document which is supplied to provide supporting discussion for the Requirements within the standard. Do you agree with the changes? If not, please provide specific suggestions for change. Yes. Ingleside Cogeneration LP found the Supplementary Reference document to be helpful, thorough, and technically accurate. The only suggestion we have is that demonstrated adherence to the Reference should be admissible of evidence of compliance at an audit or spot check. Today, all References have no official regulatory standing – which seems to defeat the purpose of developing them to begin with.
Response: Thank you for your comment. The document is explanatory but also illustrates the intent of the SDT. The rationale and methods explained within the Supplementary Reference and FAQ document represent the thoughts of the SDT regarding approaches to application of the standard, but may (or may not) be of use to demonstrate compliance. FERC approves standards as mandatory and enforceable; FERC does not approve reference documents.		
Occidental Chemical	Affirmative Ballot	We need to clarify the following: A transmission owner has established a maintenance cycle which is more stringent (less time between maintenance or test cycles) than the NERC Standard requires. The transmission owner fails to comply fully with the transmission owner's maintenance and testing schedule; however, the maintenance and/or testing is performed within the time frame mandated by the NERC Standard. Must the transmission owner report his failure to comply with his own maintenance/testing program even though the maintenance or testing was completed well within the time frame or interval required by the applicable NERC Standard? Must he transmission owner report such a failure of his own maintenance procedures which are more stringent than the NERC maintenance/testing standard? Will such a self report be considered a non-compliance?
Response: Thank you for your comment. The standard and the Supplementary Reference and FAQ document have been changed to address your concerns. Specifically, Requirement R1 part 1.3 has been removed; Requirement R3 has been revised so that, for		

Organization	Yes or No	Question 5 Comment
time-based programs, entities shall comply with the tables; Requirement R4 has been added to address performance-based maintenance, and Requirement R5 has been added to address Unresolved Maintenance Issues.		
Oncor Electric Delivery Company LLC	Yes	Oncor would like to see the "Supplementary Reference & FAQ" expanded to provide examples of what documentation would satisfy that the entity is compliant with initiating "resolution of any Unresolved Maintenance Issues." Also it would be helpful to all entities if the Drafting Team would expand on what, if any, tracking of the resolution of an unresolved maintenance issue is required. Oncor believes that keeping track of the initiation of "resolution of any unresolved maintenance issues" is necessary but that the standard does not currently address retention requirements related to this compliance obligation.
Response: Thank you for your comment. The measure related to this requirement has been expanded to include additional suggestions of relevant documentation. There is no tracking requirement listed for the resolution of unresolved maintenance issue, only the initiation of a resolution. The SDT recognizes that performance of the activities necessary to resolve an issue are entirely dependent upon the circumstances surrounding that issue and, consequently, will require varying amounts of resources and time to complete the process. Requiring tracking and deadlines is not within the scope of this standard. The SDT has clarified the intent of the requirement to initiate resolution of Unresolved Maintenance Issues by including it separately as Requirement R5 and revising the language such that the responsible entity must demonstrate its efforts to correct Unresolved Maintenance Issues.		
Springfield Utility Board	Yes	Because Springfield Utility Board's (SUB) current maintenance and testing program is time-based, the revised "Supplementary Reference" document does not impact SUB operations. SUB agrees with the document changes because the changes result in alternatives for entities, rather than being prescriptive.
Response: Thank you for your comment.		
Ingleside Cogeneration LP	Yes	Ingleside Cogeneration LP found the Supplementary Reference document to be helpful, thorough, and technically accurate. The only suggestion we have is that demonstrated adherence to the Reference should be admissible of evidence of compliance at an audit or spot check. Today, all References have no official regulatory standing - which seems to defeat the purpose of developing them to begin with.

Organization	Yes or No	Question 5 Comment
Response: Thank you for your comment. The document is explanatory but also illustrates the intent of the SDT. The rationale and methods explained within the Supplementary Reference and FAQ document represent the thoughts of the SDT regarding approaches to application of the standard, but may (or may not) be of use to demonstrate compliance. FERC approves standards as mandatory and enforceable; FERC does not approve reference documents.		
MidAmerican Energy Company	Yes	The changes to the "Supplementary Reference" document appear to be acceptable, but the following are suggested as changes to enhance clarity. 1. On page 9 of the Supplementary Reference and FAQ draft the following statement is included: "Relays that respond to non-electrical inputs or impulses (such as, but not limited to, vibration, pressure, seismic, thermal or gas accumulation) are not included." On page 67, the third sentence of Section 15.3 states: "It includes [referring to control circuitry] the wiring from every trip output to every trip coil." Later in that section the following is included: "...from a protective relay that are necessary for the correct operation of the protective functions." While this later statement may be interpreted to exclude circuitry associated with relays that do not respond to non-electrical inputs or impulses it would be better to make this more explicit. It would seem illogical to require testing of circuitry that is not needed for the protective functions covered by the standard. It is suggested that a sentence like the following be added to the first paragraph of Section 15.3: "Control circuitry associated with relays that respond to non-electrical inputs or impulses is not covered by this standard and need not be tested." 2. On page 31 of the Supplementary Reference it indicates that a procedure that includes intervals less than the standard could result in a noncompliance finding even if the maximum intervals in the standard are complied with. This is contrary to previous Commission rulings on what is mandatory and enforceable (i.e. only the standard itself Ref. Order 733 p105). This FAQ response should be changed to reflect those rulings.
Response: Thank you for your comment. **1. The trip path from a sudden pressure device is a part of the Protection System control circuitry. The sensing element is omitted from PRC-005-2 testing requirements because the SDT is unaware of industry recognized testing protocol for the sensing elements. The SDT believes that Protection Systems that trip (or can trip) the BES should be included. This position is**		

Organization	Yes or No	Question 5 Comment
		consistent with the currently-approved PRC-005-1, consistent with the SAR for Project 2007-17, and the SDT understands this to be consistent with the position of FERC staff. **2. The standard and the Supplementary Reference and FAQ document have been changed to address your concerns. Specifically, Requirement R1 part 1.3 has been removed; Requirement R3 has been revised so that, for time-based programs, entities shall comply with the tables; Requirement R4 has been added to address performance-based maintenance, and Requirement R5 has been added to address Unresolved Maintenance Issues.**
Ameren	Yes	1. Although the explanation of 'Restore' is enlightening on page 12, 'Restore' no longer appears in the PS Maintenance definition in the last few drafts. 2. We disagree with the added burden of retaining maintenance records for removed or replaced equipment. This will actually reduce reliability because of the confusion it can cause as to what equipment is providing BES protection. At most, only the last maintenance date of the removed or replaced component should be retained if there's really a need to prove that the interval was met regarding the BES protection. 3) Remove 'Reverse power relays' from the list on page 32. They provide thermal of the steam turbine, not electrical protection of the generator.
Response: **1. Thank you for your suggestion; the SDT has revised the Supplementary Reference and FAQ document to remove the "restore" reference from the definition.** **2. The records for removed/replaced equipment need to be retained to provide documentation that you were in compliance for the entire compliance monitoring period.** **3. The SDT agrees that for many steam units, reverse power relays provide alarm only of a condition which could result in eventual overheating of steam turbine components. However, for many combustion turbine generators, a reverse power condition can lead to imminent failure of teeth on the speed reduction gear and thus, reverse power relays on combustion turbine generators are frequently wired as a direct trip to the generator breaker to immediately remove the motoring condition. Furthermore, in the Supplementary Reference and FAQ document, the preface to the list of relays to which you refer is as follows: "Examples of typical devices and systems that may directly trip the generator, or trip through a lockout relay may include but are not**		

Organization	Yes or No	Question 5 Comment
necessarily limited to:". The SDT was attempting to provide a list of possible relays that might need to be included. The list is not meant to be all inclusive nor do all relays of the types on the list necessarily need to be included in an entity's PSMP.		
Tacoma Power	Yes	It is not clear to what extent can an entity (or auditor) can rely on information contained within the Supplementary Reference to support their position during an audit. There is a disclaimer at the beginning of the Supplementary Reference stating that "this supplementary reference to PRC-005-2 is neither mandatory nor enforceable." It seems that interpretation of the draft standard depends heavily upon this Supplementary Reference. At the same time, the Supplementary Reference does not rise to the level of a standard.
Response: Thank you for your comment. The document is explanatory but also illustrates the intent of the SDT. The rationale and methods explained within the Supplementary Reference and FAQ document represent the thoughts of the SDT regarding approaches to application of the standard, but may (or may not) be of use to demonstrate compliance. FERC approves standards as mandatory and enforceable; FERC does not approve reference documents.		
Bonneville Power Administration	Yes	
Dominion	Yes	
Entergy Services	Yes	
Independent Electricity System Operator	Yes	
City of Austin dba Austin Energy	Yes	

Organization	Yes or No	Question 5 Comment
ITC Holdings	Yes	
Dominion	Yes	
Southwest Power Pool Standards Review Group	Yes	
Pepco Holdings Inc & Affiliates	Yes	
Independent Electricity System Operator	Yes	
Northeast Utilities	Yes	
Westar Energy	Yes	
Progress Energy	Yes	
PacifiCorp	Yes	
Saft America, Inc.	Yes	
Exelon	Yes	

Organization	Yes or No	Question 5 Comment
Central Lincoln	Yes	
Dynegy Inc.	Yes	
Baltimore Gas & Electric Company	Negative Ballot	BGE's negative ballot is based on our response to Q5: While we do not disagree with the revisions to the Supplemental Reference, there remains an important item to correct. The supplementary reference on page 31, under the question beginning "Our maintenance plan calls…" states that an entity is "out of compliance" if maintenance occurs at a time longer than that specified in the entity's plan, even if that maintenance occurred at less than the maximum interval in PRC-005-2. But then on page 35-36, under the question, "How do I achieve a grace period without being out of compliance?" the response provides a presumably compliant example of scheduling maintenance at four year intervals in order to manage scheduling complexities and assure completion in less than the maximum time of six calendar years. This advice conflicts with the previous guidance. The FAQ /supplementary reference should be revised so that it does not imply that an entity is out of compliance by performing maintenance more frequently than required than the bright-line maxima in the tables. Entities may opt to test more frequently than dictated in the tables for a variety of reasons that may or may not be related to reliable protection system performance – compliance management, scheduling, operational preference, etc.
Response: The standard and the Supplementary Reference and FAQ document have been changed to address your concerns. Specifically, Requirement R1 part 1.3 has been removed; Requirement R3 has been revised so that, for time-based programs, entities shall comply with the tables; Requirement R4 has been added to address performance-based maintenance, and Requirement R5 has been added to address Unresolved Maintenance Issues.		
AEP	Negative Ballot	This negative vote is driven primarily by the concerns AEP has regarding the proposed supplementary reference documentation. If an entity adopts a more stringent maintenance program but fails to meet it, that entity could be found non-compliant despite continuing to abide by the minimum requirements of the standard itself. Entities should have the ability, if they so choose, to include additional maintenance activities or more stringent intervals than specified

Organization	Yes or No	Question 5 Comment
		within the standard without concern of penalty in the event they are unable to accomplish them. In addition, AEP is concerned by the volume of information provided in the supplementation documentation, and is uncertain how much weight that documentation might carry during audits. Note: Additional comments are being submitted via electronic form by Thad Ness on behalf of American Electric Power.
Response: Thank you for your comments. **The standard and the Supplementary Reference and FAQ document have been changed to address your concerns. Specifically, Requirement R1 part 1.3 has been removed; Requirement R3 has been revised so that, for time-based programs, entities shall comply with the tables; Requirement R4 has been added to address performance-based maintenance, and Requirement R5 has been added to address Unresolved Maintenance Issues.** **The document is explanatory but also illustrates the intent of the SDT. The rationale and methods explained within the Supplementary Reference and FAQ document represent the thoughts of the SDT regarding approaches to application of the standard, but may (or may not) be of use to demonstrate compliance. FERC approves standards as mandatory and enforceable; FERC does not approve reference documents.**		
Manitoba Hydro	Negative Ballot	Maintenance Activities Exceeding NERC Requirements In both the industry webinar discussion and the supplementary reference document, it was indicated that if an entity had more maintenance activities in its plan than the minimum required by PRC-005-2, then an entity would be audited to the "higher standard". We understand that an entity could write some flexibility in its program, as long as the NERC minimums were met. We are concerned that auditing to the "higher standard" could discourage entities from performing maintenance tasks beyond the NERC minimum criteria.
Response: Thank you for your comments. The standard and the Supplementary Reference and FAQ document have been changed to address your concerns. Specifically, Requirement R1 part 1.3 has been removed; Requirement R3 has been revised so that, for time-based programs, entities shall comply with the tables; Requirement R4 has been added to address performance-based maintenance, and Requirement R5 has been added to address Unresolved Maintenance Issues.		
PJM Interconnection,	Negative	PJM remains concerned with a position taken by the SDT related to statements found within their Supplementary Reference & FAQ as well as the manner in which Requirement R3 has been

Organization	Yes or No	Question 5 Comment
L.L.C.	Ballot Negative Poll	drafted. The SDT's position sends industry the wrong message; a message that entities should not go beyond what is in the text of the standards and that in some cases they can even be found non-compliant by merely failing to meet their own more stringent internal practice. Therefore, PJM is voting NEGATIVE at this time. The NERC reliability standards aim to ensure an Adequate Level of Reliability (ALR). If NERC's reliability standard establishes that an ALR is achieved by a maximum allowable relay maintenance period of every 6 years in a time-based Protection System Maintenance Program (PSMP), then an entity striving to complete its maintenance every 4 years should not be found non-compliant for completing it in 5 years. We have heard NERC say in CAN Webinars and NERC Workshops that "auditors must audit to the standard", however, the position taken by the SDT within their Supplementary Reference and FAQ document and the wording of Requirement R3 is contrary to this position.
Response: Thank you for your comments. The standard and the Supplementary Reference and FAQ document have been changed to address your concerns. Specifically, Requirement R1 part 1.3 has been removed; Requirement R3 has been revised so that, for time-based programs, entities shall comply with the tables; Requirement R4 has been added to address performance-based maintenance, and Requirement R5 has been added to address Unresolved Maintenance Issues.		
FirstEnergy	No	We do not agree with aspects of the Supplementary Reference document as discussed in Question 6.
Response: Thank you for your comments. Please see our response to your comments in Question 6.		
NERC Staff Technical Review	No	We recommend changes to Supplementary Reference. It appears the 3 calendar month interval referenced in the second FAQ in section 7.1 on page 20, Example 1 on page 21, Example 2 on page 22, and on page 23 should be updated to 4 calendar months consistent with the changes to the standard for verification of station dc supply voltage and inspection of electrolyte level and unintentional grounds. We recommend modifying references to UFLS and UVLS to clarify the intervals for distributed systems applies to both UFLS and UVLS similar to the recommended change to the standard in our comment on question 4. See pp. 26, 30, 33, 86, and 87 of the supplementary reference.

Organization	Yes or No	Question 5 Comment
Response: Thank you for your comment. **1. Thank you for comment; the Supplementary Reference and FAQ document has been changed.** **2. Changes have been made to the standard and its Supplementary Reference and FAQ document.**		
MRO's NERC Standards Review Forum	No	a. Page 9, "Is a Sudden Pressure Relay an auxiliary tripping relay? "1) During the webinar on Thursday, September 15th it was asked whether the trip path for a sudden pressure relay needed to be confirmed. Based on this question, we believe that the FAQ should be modified as follows:i. Is a Sudden Pressure Relay an auxiliary tripping relay? No. IEEE C37.2-2008 assigns the device number 94 to auxiliary tripping relays. Sudden pressure relays are assigned device number 63. Sudden pressure relays are excluded from the Standard because it does not utilize voltage and/or current measurements to determine anomalies. Since the sudden pressure relay is not included, it also follows that trip path testing for this relay type is also excluded. b. On page 26 of the Supplementary Reference document, it states, "If your PSMP (plan) requires more activities than you must perform and document to this higher standard." This penalizes utilities from including best practices in their PSMP, and encourages utilities to implement the standard maintenance practice instead of a higher maintenance practice. Why would a utility accept the additional risk of a NERC penalty or sanction when they can stay in compliance by accepting the minimum requirements of the standard? By stating this, the PSMP will include only those required items at the minimum frequency to avoid a compliance violation. For the reliability of the BES, recommend the wording be changed to, "If your PSMP (plan) requires more activities than required by PRC-005-2, you will be held accountable only to the minimum requirements in the standard. NERC encourages utilities to implement best practices to improve the reliability of the BES, so utilities will not be penalized for exceeding the standards." In FERC Order 693, section 278 FERC states: While we appreciate that many entities may perform at a higher level than that required by the Reliability Standards, and commend them for doing so, the Commission is focused on what is required under the Reliability Standards, we do not require that they exceed the Reliability Standards". c. Page 78, last paragraph: If the same type of ohmic testing is done (impedance, conductance or

Organization	Yes or No	Question 5 Comment
		resistance), may a different manufacturer's test equipment be used for this testing? d. Page 79, second paragraph of "Why verify voltage?": 1) "The verification of the dc supply voltage is simply an observation of battery voltage to prove that the charger has not been lost or is not malfunctioning." i. Is it the intent of the PSMT SDT that this measurement is taken at the battery terminals, or will a reading taken from the battery charger panel meter meet this requirement? 2) "The maintenance activity of verifying the float voltage of the battery charger is not to prove that a charger is lost or producing high voltages on the station dc supply, but rather to prove that the charger is properly floating the battery within the proper voltage limits." i. Is it the intent of the PSMT SDT that this measurement is taken at the battery terminals, or will a reading taken from the battery charger panel meter meet this requirement? e. Except as noted above, the changes to the "Supplementary Reference" document appear to be acceptable, but the following are suggested as changes to enhance clarity. 1) On page 9 of the Supplementary Reference and FAQ draft the following statement is included: "Relays that respond to non-electrical inputs or impulses (such as, but not limited to, vibration, pressure, seismic, thermal or gas accumulation) are not included." On page 67, the third sentence of Section 15.3 states: "It includes [referring to control circuitry] the wiring from every trip output to every trip coil." Later in that section the following is included: "...from a protective relay that are necessary for the correct operation of the protective functions." While this later statement may be interpreted to exclude circuitry associated with relays that do not respond to non-electrical inputs or impulses it would be better to make this more explicit. It would seem illogical to require testing of circuitry that is not needed for the protective functions covered by the standard. It is suggested that a sentence like the following be added to the first paragraph of Section 15.3: "Control circuitry associated with relays that respond to non-electrical inputs or impulses is not covered by this standard and need not be tested." 2) On page 31 of the Supplementary Reference it indicates that a procedure that includes intervals less than the standard could result in a noncompliance finding even if the maximum

Organization	Yes or No	Question 5 Comment
		intervals in the standard are complied with. This is contrary to previous Commission rulings on what is mandatory and enforceable (i.e. only the standard itself Ref. Order 733 p105). This FAQ response should be changed to reflect those rulings.
Response: Thank you for your comment. **1. The trip path from a sudden pressure device is a part of the Protection System control circuitry. The sensing element is omitted from PRC-005-2 testing requirements because the SDT is unaware of industry recognized testing protocol for the sensing elements. The SDT believes that Protection Systems that trip (or can trip) the BES should be included. This position is consistent with the currently-approved PRC-005-1, consistent with the SAR for Project 2007-17, and the SDT understands this to be consistent with the position of FERC staff.** **2. The standard and the Supplementary Reference and FAQ document have been changed to address your concerns. Specifically, Requirement R1 part 1.3 has been removed; Requirement R3 has been revised so that, for time-based programs, entities shall comply with the tables; Requirement R4 has been added to address performance-based maintenance, and Requirement R5 has been added to address Unresolved Maintenance Issues.** **3. Yes. Your concern, of course should be that your results can be trended from test to test. The Supplementary Reference and FAQ document has been changed.** **4. The Supplementary Reference and FAQ document has been changed to add clarity.** **5. The trip path from a sudden pressure device is a part of the Protection System control circuitry. The sensing element is omitted from PRC-005-2 testing requirements because the SDT is unaware of industry recognized testing protocol for the sensing elements. The SDT believes that Protection Systems that trip (or can trip) the BES should be included. This position is consistent with the currently-approved PRC-005-1, consistent with the SAR for Project 2007-17, and the SDT understands this to be consistent with the position of FERC staff. As to part 2, The standard and the Supplementary Reference and FAQ document have been changed to address your concerns. Specifically, R1 part 1.3 has been removed; R3 has been revised so that, for time-based programs, entities shall comply with the tables; R4 has been added to address performance-based maintenance, and R5 has been added to address Unresolved Maintenance Issues.**		
ACES Power Collaborators	No	There are some changes that are needed to the document. 1. On Page 19, the second question refers to R1.4. There is no R1.4 in the standard. We assume

Organization	Yes or No	Question 5 Comment
		that document is intended to refer to part 1.4 under R1. This needs to be clarified and corrected. 2. The reference document creates an improper incentive to eliminate best practices and utilize the maximum time intervals established in the standard. The document states that an entity will be subject to compliance violations if it has a maintenance and testing program with time intervals that are more stringent than the maximum time intervals in the standard and it does not meet its more stringent intervals. This would hold true even if the registered entity meets the maximum intervals established in the standard. To reduce compliance risk, registered entities will be incented to increase its time intervals to the maximum allowed by the standard. This is contrary to supporting reliability. Penalizing entities for failing to meet their more stringent plan requirements is also contrary to guidance provided by the Commission. Doug Curry, General Counsel of Lincoln Electric System, spoke to the Commission at the November 18, 2010 FERC technical conference on reliability monitoring, enforcement and compliance about his company's experience with the vegetation management standard. They exceeded the requirements for annual inspections by including six aerial patrols each year but were found in violation of the standard and paid penalties when they did not complete but one aerial patrol in the first five months of the year. The auditors concluded that the company's ground patrol fully satisfied the minimum requirements of the standard. In the end, LES removed the aerial inspections from the vegetation management plan. The Commissioners acknowledged that this was contrary to their goal of an adequate level of reliability and agreed that an entity should not be penalized for failing to meet their more stringent requirements when they meet the standard requirements. 3. On Page 34, the FAQ about commissioning does not appear to be consistent with CAN-0011. While we believe the reference document is more correct, the drafting team should compare the advice given in the reference document to that in the CAN to ensure that it is not conflicting. Given that NERC is in the process of revising all of the CANs, the best approach may simply be to add a statement referencing the CAN-0011 for further information. 4. Comments about "gaming the PBM system" regarding restoring segment performance should be removed from the reference document. Comments like these indicate intent by a

Organization	Yes or No	Question 5 Comment
		registered entity to manipulate the compliance process. Only after a thorough investigation can such intent be determined. Thus, there shouldn't be a presumption that registered entities will attempt this. Better comments would be to focus on the consistency that the three year period provides in determining segment performance. 5. In section 12.1 on page 58, the reference document discusses out of service equipment. NERC recently issued a lesson learned on removing unused relaying equipment on August 10, 2011. The drafting team may wish to reference that lesson learned in the reference document.
Response: Thank you for your comment. **1. The Supplementary Reference and FAQ document has been changed.** **2. The standard and the Supplementary Reference and FAQ document have been changed to address your concerns. Specifically, Requirement R1 part 1.3 has been removed; Requirement R3 has been revised so that, for time-based programs, entities shall comply with the tables; Requirement R4 has been added to address performance-based maintenance, and Requirement R5 has been added to address Unresolved Maintenance Issues.** **3. The Supplementary Reference and FAQ document has been changed.** **4. The Supplementary Reference and FAQ document has been changed.** **5. The Supplementary Reference and FAQ document has been changed to incorporate a discussion of the cited Lessons Learned.**		
Southern Company Generation	No	Several additional edits are needed so that the document matches the proposed standard: 1) In Section 5.1.1, page 16, add "and Table 3" in the Figure and at the end of FAQ after figure in that section. 2) In Section 7.1, example #1, a 3 month battery interval is shown 3) In Section 8.1.1, a 3 month interval is shown for communication circuit 4) In Section 15.5.1, several references to "3 month" and "three month" intervals are shown for communication circuits. 5) In Appendix B, the formatting is incorrect for Al McMeekin's company name.

Organization	Yes or No	Question 5 Comment
Response: Thank you for your comment. The Supplementary Reference and FAQ document has been changed to address each of your suggestions.		
Nebraska Public Power District	No	a. On page 26 of the Supplementary Reference document, it states, "If your PSMP (plan) requires more activities than you must perform and document to this higher standard." This penalizes utilities from including best practices in their PSMP, and encourages utilities to implement the standard maintenance practice instead of a higher maintenance practice. Why would a utility accept the additional risk of a NERC penalty or sanction when they can stay in compliance by accepting the minimum requirements of the standard? By stating this, the PSMP will include only those required items at the minimum frequency to avoid a compliance violation. For the reliability of the BES, recommend the wording be changed to, "If your PSMP (plan) requires more activities than required by PRC-005-2, you will be held accountable only to the minimum requirements in the standard. NERC encourages utilities to implement best practices to improve the reliability of the BES, so utilities will not be penalized for exceeding the standards." In FERC Order 693, section 278 FERC states: While we appreciate that many entities may perform at a higher level than that required by the Reliability Standards, and commend them for doing so, the Commission is focused on what is required under the Reliability Standards, we do not require that they exceed the Reliability Standards".
Response: The standard and the Supplementary Reference and FAQ document have been changed to address your concerns. Specifically, Requirement R1 part 1.3 has been removed; Requirement R3 has been revised so that, for time-based programs, entities shall comply with the tables; Requirement R4 has been added to address performance-based maintenance, and Requirement R5 has been added to address Unresolved Maintenance Issues.		
American Electric Power	No	With such a complex standard as this, the FAQ and Supplementary Reference documents do aid the Protection System owner in demystifying the requirements. However, AEP is uncertain how much weight the documents might carry during audits. We recommend that this additional information be included within the actual standard (for example in an appendix) but in a more compact version. Section 15.7 of the supplementary reference includes the bullet point "No verification of trip path

Organization	Yes or No	Question 5 Comment
		required between the lock-out and/or auxiliary tripping device(s).” This appears to contradict the other bullet points within Section 15.7.
Response: Thank you for your comment. **1. Doing as you suggest would make the supporting information within the Supplementary Reference and FAQ document part of the standard and this would add extensive and unnecessary prescription to the standard.** **2. The Supplementary Reference and FAQ document has been changed.**		
Lincoln Electric System	No	Please see the comments submitted by the MRO NSRF.
Response: Please see our response to the comments submitted by the MRO NSRF.		
Liberty Electric Power LLC	No	The reference contains language which makes it a violation should an entity choose a cycle time less than the maximum from the table, and then fails to meet that cycle. (See page 27, "If your PSMP (plan) requires activities more often than the Tables maximum then you must perform and document those activities to your more stringent standard.") There is no reason to hold a RE in violation if all work is performed within the maximum time from the table - either there was no reliability risk, or the table is incorrect and a reliability risk in itself.
Response: The standard and the Supplementary Reference and FAQ document have been changed to address your concerns. Specifically, Requirement R1 part 1.3 has been removed; Requirement R3 has been revised so that, for time-based programs, entities shall comply with the tables; Requirement R4 has been added to address performance-based maintenance, and Requirement R5 has been added to address Unresolved Maintenance Issues.		
Manitoba Hydro	No	1. Page 26: In both the industry webinar discussion and the supplementary reference document, it was indicated that if an entity had more maintenance activities in its plan than the minimum required by PRC-005-2, then an entity would be audited to the "higher standard". We understand that an entity could write some flexibility in its program, as long as the NERC minimums were met. We are concerned that auditing to the "higher standard" could

Organization	Yes or No	Question 5 Comment
		discourage entities from performing maintenance tasks beyond the NERC minimum criteria. 2. The discussion on page 9 indicates that although the relays which respond to mechanical parameters are not included in the scope of PRC-005-2, the associated trip circuits are included. We suggest that neither the relays which respond to mechanical parameters nor their associated trip circuits are within the scope of this standard 3. References to the tables should be consistently updated to include the new Table 3. "Every 3 calendar months" should be updated throughout the document to "Every 4 calendar months". For example, Page 23: Example #3 should be revised. 4. In addition, there are a number of grammatical errors in the document, particularly capitalization and punctuation, which make it difficult to read. There are terms which are improperly capitalized implying that they are approved NERC Glossary of Terms definitions when they are not.
Response Thank you for your comment. **1. The standard and the Supplementary Reference and FAQ document have been changed to address your concerns. Specifically, Requirement R1 part 1.3 has been removed; Requirement R3 has been revised so that, for time-based programs, entities shall comply with the tables; Requirement R4 has been added to address performance-based maintenance, and Requirement R5 has been added to address Unresolved Maintenance Issues.** **2. The trip path from a sudden pressure device is a part of the Protection System control circuitry. The sensing element is omitted from PRC-005-2 testing requirements because the SDT is unaware of industry recognized testing protocol for the sensing elements. The SDT believes that Protection Systems that trip (or can trip) the BES should be included. This position is consistent with the currently-approved PRC-005-1, consistent with the SAR for Project 2007-17, and the SDT understands this to be consistent with the position of FERC staff.** **3. The Supplementary Reference and FAQ document has been changed.** **4. The Supplementary Reference and FAQ document has had identified errors corrected.**		
American Transmission	No	ATC provides the following suggestions for change:

Organization	Yes or No	Question 5 Comment
Company		1. Page 9, "Is a Sudden Pressure Relay an auxiliary tripping relay? "During the webinar on Thursday, September 15th it was asked whether the trip path for a sudden pressure relay needed to be confirmed. Based on this question, we believe that the FAQ should be modified as follows: Is a Sudden Pressure Relay an auxiliary tripping relay?No. IEEE C37.2-2008 assigns the device number 94 to auxiliary tripping relays. Sudden pressure relays are assigned device number 63. Sudden pressure relays are excluded from the Standard because it does not utilize voltage and/or current measurements to determine anomalies. Since the sudden pressure relay is not included, it also follows that trip path testing for this relay type is also excluded. 2. Page 78, last paragraph:If the same type of ohmic testing is done (impedance, conductance or resistance), modify the FAQ to allow the use of a different manufacturer's test equipment to conduct the testing. 3. Page 80, second paragraph: "The verification of the dc supply voltage is simply an observation of battery voltage to prove that the charger has not been lost or is not malfunctioning." Insert the following: "A reading taken from the battery charger panel meter will meet this requirement." "The maintenance activity of verifying the float voltage of the battery charger is not to prove that a charger is lost or producing high voltages on the station dc supply, but rather to prove that the charger is properly floating the battery within the proper voltage limits." Insert the following." A reading taken from the battery charger panel meter will meet this requirement."

Response: Thank you for your comments.

1. **The trip path from a sudden pressure device is a part of the Protection System control circuitry. The sensing element is omitted from PRC-005-2 testing requirements because the SDT is unaware of industry recognized testing protocol for the sensing elements. The SDT believes that Protection Systems that trip (or can trip) the BES should be included. This position is consistent with the currently-approved PRC-005-1, consistent with the SAR for Project 2007-17, and the SDT understands this to be consistent with the position of FERC staff.**
2. **In the Supplementary Reference and FAQ document, the SDT is discussing methods of performing ohmic testing but is not specifying any particular test or test equipment.**
3. **The Supplementary Reference and FAQ document has been changed.**

Organization	Yes or No	Question 5 Comment
Southern Company Transmission	No	1. Page 16: 'Add and Table 3' in Figure and end of FAQ after figure 2. Page 20: change reference from 3 to 4 months. This applies throughout document.
Response: Thank you for your comments. **1. The Supplementary Reference and FAQ document has been changed.** **2. The Supplementary Reference and FAQ document has been changed.**		
CenterPoint Energy	No	CenterPoint Energy appreciates that there is now only one document, instead of the two originally proposed. However, we question the name of the document which shows "Supplemental Reference and FAQ". The use of "Supplemental Reference" could infer it contains requirements not found in the PRC-005-2 standard. Also, we suggest that NERC standardize on the names of documents associated with standards and other NERC initiatives. CenterPoint Energy recommends the name of the document be "Technical Reference".
Response: Thank you for your comment. The Supplementary Reference and FAQ document is explanatory in nature.		
BGE	No	While we do not disagree with the revisions to the Supplemental Reference, there remains an important item to correct. The supplementary reference on page 31, under the question beginning "Our maintenance plan calls..." states that an entity is "out of compliance" if maintenance occurs at a time longer than that specified in the entity's plan, even if that maintenance occurred at less than the maximum interval in PRC-005-2. But then on page 35-36, under the question, "How do I achieve a grace period without being out of compliance?" the response provides a presumably compliant example of scheduling maintenance at four year intervals in order to manage scheduling complexities and assure completion in less than the maximum time of six calendar years. This advice conflicts with the previous guidance. The FAQ /supplementary reference should be revised so that it does not imply that an entity is out-of-compliance by performing maintenance more frequently than required than the bright-line maxima in the tables. Entities may opt to test more frequently than dictated in the tables for a variety of reasons that may or may not be related to reliable protection system performance - compliance management, scheduling, operational

Organization	Yes or No	Question 5 Comment
		preference, etc.
Response: The standard and the Supplementary Reference and FAQ document have been changed to address your concerns. Specifically, Requirement R1 part 1.3 has been removed; Requirement R3 has been revised so that, for time-based programs, entities shall comply with the tables; Requirement R4 has been added to address performance-based maintenance, and Requirement R5 has been added to address Unresolved Maintenance Issues.		
Constellation Power Generation	No	While we do not disagree with the revisions to the Supplemental Reference, there remains an important item to correct. The supplementary reference on page 31, under the question beginning "Our maintenance plan calls..." states that an entity is "out of compliance" if maintenance occurs at a time longer than that specified in the entity's plan, even if that maintenance occurred at less than the maximum interval in PRC-005-2. But then on page 35-36, under the question, "How do I achieve a grace period without being out of compliance?" the response provides a presumably compliant example of scheduling maintenance at four year intervals in order to manage scheduling complexities and assure completion in less than the maximum time of six calendar years. This advice conflicts with the previous guidance. The FAQ /supplementary reference should be revised so that it does not imply that an entity is out-of-compliance by performing maintenance more frequently than required than the bright-line maxima in the tables. Entities may opt to test more frequently than dictated in the tables for a variety of reasons that may or may not be related to reliable protection system performance - compliance management, scheduling, operational preference, etc. The discussion of "grace period" may be best clarified as a term to include in an entity's PSMP that grants entities the flexibility to maintain compliance if testing occurs between an entity's plan interval and the bright-line interval.
Response: The standard and the Supplementary Reference and FAQ document have been changed to address your concerns. Specifically, Requirement R1 part 1.3 has been removed; Requirement R3 has been revised so that, for time-based programs, entities shall comply with the tables; Requirement R4 has been added to address performance-based maintenance, and Requirement R5 has been added to address Unresolved Maintenance Issues.		
Constellation Energy	No	While we do not disagree with the revisions to the Supplemental Reference, there remains an important item to correct. The supplementary reference on page 31, under the question beginning

Organization	Yes or No	Question 5 Comment
Commodities Group		"Our maintenance plan calls..." states that an entity is "out of compliance" if maintenance occurs at a time longer than that specified in the entity's plan, even if that maintenance occurred at less than the maximum interval in PRC-005-2. But then on page 35-36, under the question, "How do I achieve a grace period without being out of compliance?" the response provides a presumably compliant example of scheduling maintenance at four year intervals in order to manage scheduling complexities and assure completion in less than the maximum time of six calendar years. This advice conflicts with the previous guidance. The FAQ /supplementary reference should be revised so that it does not imply that an entity is out-of-compliance by performing maintenance more frequently than required than the bright-line maxima in the tables. Entities may opt to test more frequently than dictated in the tables for a variety of reasons that may or may not be related to reliable protection system performance - compliance management, scheduling, operational preference, etc. The discussion of "grace period" may be best clarified as a term to include in an entity's PSMP that grants entities the flexibility to maintain compliance if testing occurs between an entity's plan interval and the bright-line interval.
Response: The standard and the Supplementary Reference and FAQ document have been changed to address your concerns. Specifically, Requirement R1 part 1.3 has been removed; Requirement R3 has been revised so that, for time-based programs, entities shall comply with the tables; Requirement R4 has been added to address performance-based maintenance, and Requirement R5 has been added to address Unresolved Maintenance Issues.		
Western Area Power Administration	No	See comments under question 6
Response: Please see our response to your comments in Question 6.		
Tennessee Valley Authority	No	

6. **If you have any other comments on this Standard that you have not already provided in response to the prior questions, please provide them in the comment section.**

Summary Consideration:

Many commenters objected to Requirement R3 and to the explanation that entities would be held to compliance on "either the Tables or their PSMP, whichever is more stringent". In response to these comments, the SDT modified the standard to remove Requirement R1 part 1.3, and revised Requirement R3 so that, for time-based programs, entities shall comply with the Tables rather than their PSMP. The SDT added Requirement R4 to address performance-based maintenance, and added Requirement R5 to address Unresolved Maintenance Issues. The Supplementary Reference and FAQ document was updated to reflect these changes.

Several commenters questioned the inclusion of the dc control circuitry for sudden pressure relays even though the relays themselves are excluded from the definition of "Protection System"; the SDT reiterated its position that this dc control circuitry is indeed included because the dc control circuitry is associated with protective functions.

Several comments were offered objecting that the VSLs establish that any non-compliance is a violation, and that "perfection is unrealistic". The SDT responded that the VSL Guidelines do not provide for an entity to be out of performance to some degree without incurring a violation.

Several comments were offered regarding "Unresolved Maintenance Issues". Some of these comments suggested that the entity should be required to resolve such issues, rather than initiating resolution. Others offered concerns regarding the definition of this term itself or the related VSLs. The SDT revised the definition to: "A deficiency identified during a maintenance activity that causes the component to not meet the intended performance, and requires follow-up corrective action." The VSLs for the old Requirement R3 (new Requirement R5) were revised from graduated "%" to graduated "hard counts" of violations. The SDT also clarified the intent of the requirement to initiate resolution of Unresolved Maintenance Issues by including it separately as Requirement R5 and revising the language such that the responsible entity must demonstrate its efforts to correct Unresolved Maintenance Issues.

Other comments were offered regarding Data Retention, generally objecting to retaining the maintenance records for two full intervals. The SDT explained that this expectation is consistent with the Compliance Monitoring and Enforcement Program.

Several commenters questioned the verification of lockout and auxiliary relays every 6 years. The SDT explained their rationale for this requirement relative to lockout relays, and did move the auxiliary relays to the 12-year control circuitry verification.

Several comments were offered on the Implementation plan, resulting in several clarifying changes.

Many comments were offered, questioning the Applicability of the standard relative to the recently-approved Interpretation of "transmission Protection System". The SDT explained that PRC-005-2 does not use this term; thus the interpretation does not apply. The SDT also explained that the Applicability in PRC-005 is correct and that it supports the reliability of the BES.

In response to comments, the SDT revised Applicability 4.2.5.4 to indicate that, for generator-connected station service transformers, only the Protection Systems that trip the generator, either directly or via a lockout relay are included in the standard.

In response to comments, Table 1-4(f) was modified to more accurately represent the monitoring attributes and related activities for monitored Vented Lead-Acid and Valve-Regulated Lead-Acid batteries.

Organization	Yes or No	Question 6 Comment
City of Austin dba Austin Energy	Affirmative Ballot	(1) The following language should be clarified to make it clear that a Registered Entity does not have to include its detailed maintenance procedures in its PSMP: 1.4. Include all applicable monitoring attributes and related maintenance activities applied to each Protection System component type consistent with the maintenance intervals specified in Tables 1-1 through 1-5, Table 2, and Table 3.
	Affirmative Poll	(2) For a modern digital relay panel, designed with monitored components and electromechanical lockouts, the maintenance interval would otherwise be a maximum of 12 years except that the lockout must be electrically operated every 6 years. We cannot see justification for a separate maintenance activity to just test the lockouts, due to the increased human error associated with testing lockouts and the low likelihood of a lockout failure. We recommend that the lockouts be tested on a 12 year basis, perhaps in association with the "Unmonitored control circuitry associated with protective functions" as found in Table 1-5. By doing so, we feel that the risk of an undesired operation due to human error can be minimized and not degrade system reliability.
		(3) If sudden pressure relays are exempt from the Standard, the DC circuitry for those relays should also be exempt.
		(4) If a Registered Entity has a PSMP that is more stringent than the intervals in PRC-005-2, the Registered Entity should not be considered out of compliance if it fails to meet its internal interval but remains within the interval set forth in PRC-005-2.

Response: Thank you for your comments.

1. **The SDT's intent with the R1.4 wording is to convey that the entity's PSMP must document that the monitoring attributes of any given component type meet the Table-specified monitoring attributes in order to justify exclusion of the maintenance activities and/or the lengthening of maintenance intervals as provided for in the Tables. PRC-005-2 does not have requirements for inclusion of detailed maintenance procedures in an entity's PSMP as the tables within the standard have taken the place of the "summary of maintenance and testing procedures" required by R1.2 of PRC-005-1.**
2. **The SDT believes that electromechanical lockout relays need periodic operation in order to remain reliable. As such, these devices are required to be exercised at the same 6 year interval required for electromechanical relays. The SDT recognizes the risk of human error trips when working with testing of lockout devices but believes these risks can be managed. Performance-based maintenance is an option if you want to extend your intervals beyond 6 years. The SDT, however, has modified Table 1-5 to remove other auxiliary relays, etc, from this activity, and clarified that the verification of such devices is included within the 12-year unmonitored control circuitry verification.**
3. **The trip path from a sudden pressure device is a part of the Protection System control circuitry. The sensing element is omitted from PRC-005-2 testing requirements because the SDT is unaware of industry recognized testing protocol for the sensing elements. The SDT believes that Protection Systems that trip (or can trip) the BES should be included. This position is consistent with the currently-approved PRC-005-1, consistent with the SAR for Project 2007-17, and the SDT understands this to be consistent with the position of FERC staff.**
4. **The standard and the Supplementary Reference and FAQ document have been changed to address your concerns. Specifically, Requirement R1 part 1.3 has been removed; Requirement R3 has been revised so that, for time-based programs, entities shall comply with the tables; Requirement R4 has been added to address performance-based maintenance, and Requirement R5 has been added to address Unresolved Maintenance Issues.**

City of Tacoma, Department of Public Utilities, Light Division, dba Tacoma Power	Affirmative Ballot	1. The implementation plan for R2 and R3 is unclear on whether each maintenance activity has its own implementation schedule. The implementation plan can also be interpreted to mean that the implementation schedule for a given protection system component is driven by the smallest maximum maintenance (allowable) interval. For example, for unmonitored communications systems, it is unclear whether all maintenance activities indicated in Table 1-2, including those corresponding to 6 calendar years, must be completed on all unmonitored communications systems by the first calendar quarter 15 months following applicable regulatory approval, or if this timeline only applies to the maintenance activity specified in Table 1-2 corresponding to a maximum maintenance interval of 4 calendar months.
		2. Assuming that there is a different implementation schedule for different maintenance activities for some protection system component types (namely station DC supply and communication systems), the middle bullet on page 1 of the implementation plan does not seem to consider that it may not be possible to identify whether some protection system components are completely being addressed by PRC-005-2 or the Program developed for the previous standards. In other words, during implementation, some maintenance activities for the same protection system component may be addressed by PRC-005-2, while other maintenance activities may be addressed by the Program developed for the previous standards.
		3. It is unclear whether control circuitry (trip paths) from protective relays that respond to mechanical quantities is included. This issue is addressed in the supplementary reference but is vague in the draft standard itself.
		4. This draft of PRC-005-2 requires the Protection System Maintenance Program (PSMP) to “include all applicable monitoring attributes and related maintenance activities” per the Tables and requires an entity to “implement and follow its PSMP.” Under the draft standard, it is unclear whether an entity has to document in the PSMP and/or maintenance records how they accomplish(ed) the maintenance activities or simply to indicate that the maintenance activities are included and have been completed within the defined intervals. It is clear that entities are afforded some latitude in how they conduct the required maintenance activities. However, the level of detail required to document (1) how an entity chooses to perform the maintenance activities and (2) that applicable maintenance activities have been completed is not clear.

		5. In Table 1-2, there is a maintenance activity related to communication systems to “verify essential signals to and from other Protection System components.” It is unclear if this statement is referring to control circuitry associated with the communication system end devices, end device input and output operation (as in Table 1-1 for protective relays), or something else. It is recommended that the requirement be to “verify operation of communication system inputs and outputs that are essential to proper functioning of the Protection System.” This language is consistent with that used for protective relays in Table 1-1.
		6. Referring to Table 1-2, it is unclear whether an entity has the sole authority decide which ‘performance criteria’ are ‘pertinent.’ Additionally, it is unclear if an entity must document the ‘communications technology applied’ and the associated ‘performance criteria’ in its PSMP.
		7. In Table 1-4, it is unclear if there is a distinction between the terms ‘resistance’ and ‘ohmic values.’ If there is a distinction, then this distinction should be clarified.
		8. In Table 1-4, it is unclear if there is a distinction between the terms ‘battery terminal connection resistance’ and ‘unit-to-unit connection resistance.’ If there is a distinction, then this distinction should be clarified.
		9. In Table 1-4, replace the term ‘resistance’ with ‘impedance.’
		10. Recommend that the 6 calendar month interval in Table 1-4(b) be lengthened to 18 calendar months to be more consistent with similar maintenance activities for other battery types. At minimum, lengthen the interval to at least 7 calendar months in a similar way that 3 calendar months was lengthened to 4 calendar months for other maintenance activities.

		11. Referring to Table 1-5, no periodic maintenance is required for “control circuitry whose continuity and energization or ability to operate are monitored and alarmed.” It is unclear whether or not it is acceptable to verify DC voltage at the actuating device trip terminals at least once every 12 calendar years for “unmonitored control circuitry associated with protective functions.” It is recommended that periodically verifying DC voltage in this manner be an acceptable means of accomplishing the maintenance activity identified in Table 1-5 for unmonitored control circuitry associated with protective functions.
		12. Referring to 4.2. Facilities of the draft standard, it is unclear whether protection systems for transformers that step down from over 100kV to below 15kV are applicable to the standard. Even if there are normally-open distribution feeder ties for purposes of transferring load in a make-before-break fashion, these transformers are generally not considered BES elements.
		13. Referring to 4.2.5 of the draft standard, it is unclear whether protection for generator excitation systems are applicable to the standard.
		14. It is unclear whether external timing relays (e.g., Zone 2) are considered control circuitry components (like lockout and auxiliary relays) or protective relay components.
Response:	**Thank you for your comments.**	
	1. The SDT agrees with your observation and has changed the relevant parts of the implementation plan to clarify that they apply to the maintenance activities for the relevant maintenance intervals.	
	2. The SDT agrees with your observation and has revised the Implementation plan to clarify.	

	3. The trip paths from protective relays that respond to mechanical quantities and are intended to detect faults are a part of the Protection System control circuitry. The sensing elements are omitted from PRC-005-2 testing requirements because the SDT is unaware of industry recognized testing protocols for these sensing elements. The SDT believes that Protection Systems that trip (or can trip) the BES should be included. This position is consistent with the currently-approved PRC-005-1, consistent with the SAR for Project 2007-17, and the SDT understands this to be consistent with the position of FERC staff. Note that trip signals from devices sensing mechanical parameters not directly indicative of an electrical fault need not be tested per this standard.
	4. The SDT has removed parts 1.1 and 1.3 from Requirement R1, addressing part of your comment. The SDT agrees that PRC-005-2 allows some leeway in how an entity fulfills the testing requirements of the standard. Section 15 of the Supplementary Reference and FAQ document provides numerous examples of possible testing techniques for the various component types making up a Protection System. An entity's PSMP should clearly define how the testing requirements of the standard are fulfilled. The Measures for each requirement, as well as Section 15.8 of the Supplementary Reference and FAQ document, provide some examples of possible compliance documentation for completion of testing.
	5. The SDT agrees with your suggestion and has changed the standard accordingly.
	6. The entity has the authority to establish its own acceptable performance criteria. This criteria does not need to be in the PSMP, but should reside somewhere within the maintenance documentation.
	7. As utilized on Table 1-4, the term "ohmic value" is a generic reference to the measurement of a battery cell or units ability to pass current flow. This may be done using conductance, resistance or impedance measurements; the various battery test equipment manufacturers use different measurement methods and the term "ohmic value" is meant to be technology neutral. See FAQ on page 78 of the Supplementary Reference and FAQ document. The term "resistance" as used in Table 1-4 refers specifically to the dc resistance of the battery terminal connections and the battery intercell/inter-unit physical connectors. See related FAQ on pages 74-75 of the Supplementary Reference and FAQ document.

	8. Battery terminal connection resistance is a measurement of the resistance of a connection at a battery terminal. Battery intercell or unit-to-unit connection resistance is a measurement of the resistance of the external conductor interconnecting two adjacent battery cells or two adjacent multi-cell battery units. The SDT believes these are common battery maintenance terms used throughout the industry.
	9. The SDT disagrees and believes that resistance as used in Table 1-4 is the appropriate term for the parameters to be measured and is consistent with standard battery system maintenance terminology.
	10. The SDT disagrees with your recommendation to standardize maintenance intervals between different battery types that have distinctly different failure mechanisms. See related FAQ on pages 80-81 of the Supplementary Reference and FAQ document for further discussion of requirements for ohmic measurements of VRLA batteries. Concerning your recommendation to allow for 7 calendar months, the SDT believes that the six-month interval specified is appropriate.
	11. The SDT has modified this specific portion of the Table, and believes that the modifications address your concern. Please see Section 15.3 of the Supplementary Reference and FAQ document for a discussion of this topic.
	12. The standard does not include the Protection Systems for transformers that step down from over 100kV to below 15kV if these transformers are not BES elements. If Protection Systems are installed for purposes of detecting Faults on BES elements, these Protection Systems are included.
	13. Paragraph 4.2.5.1 indicates that the excitation system protection system would only be in scope if the excitation system generates signals that trip the generator output breaker either directly or via lockout or auxiliary tripping relays.
	14. As timing is critical to proper Protection System function, timers are considered protective relays.

Ameren Services	Affirmative Ballot	Measure M3 on page 5 should only apply to 99.5% of the components. Please revise to state: "Each … shall have evidence that it has implemented the Protection System Maintenance Program for 99.5% of its components and initiated…." PRC-005-2 unrealistically mandates perfection without providing technical justification. A basic premise of engineering is to allow for reasonable tolerances, even Six Sigma allows for defects. Requiring perfection may well harm reliability by distracting valuable resources from higher priority duties concerning the Protection System. We are not asking for the VSL to be changed. No one is perfect and it is impractical to imply perfection is achievable. The consequence of a very small number of components having a missed or late maintenance activity is insignificant to BES reliability. Our proposed reasonable tolerance sets an appropriate level of performance expectation. We disagree with the notion that this is "non-performance". An alternate approach regarding the unrealistic perfection of M3 is to correctly recognize that the protection of the primary BES is the objective. Most Protection Systems are redundant by design and the entity needs to be afforded the opportunity to show that a redundant component met the PSMP thereby providing the required protection. The entity should be allowed a reasonable time frame of one calendar increment to maintain the component in question. Our concern stems from the tens of thousands of components in a PSMP, and the reality that rarely but occasionally a data base error or outage scheduling issue may result in a very small number component exceeding their maximum interval. As long as the entity can show that BES protection was sustained and maintains the component quickly (e.g. within one calendar month of discovery), BES reliability has been maintained.
Response: Thank you for comment. **The NERC criteria for VSLs do not currently permit them to allow some level of non-performance without being in violation. The graded approach of the VSL for Requirement R3 allows the RRO to provide discretion when assessing severity of the violation when only a relatively small number of maintenance activities have been missed.**		

City of Austin dba Austin Energy	Affirmative Ballot	1. The following language should be clarified to make it clear that a Registered Entity does not have to include its detailed maintenance procedures in its PSMP: "all applicable monitoring attributes and related maintenance activities ". Reference: R1.4. Include all applicable monitoring attributes and related maintenance activities applied to each Protection System component type consistent with the maintenance intervals specified in Tables 1-1 through 1-5, Table 2, and Table 3. 2. For a modern digital relay panel, designed with monitored components and electromechanical lockouts, the maintenance interval would otherwise be a maximum of 12 years except that the lockout must be electrically operated every 6 years. We cannot see justification for a separate maintenance activity to just test the lockouts, due to the increased human error associated with testing lockouts and the low likelihood of a lockout failure. We recommend that the lockouts be tested on a 12 year basis, perhaps in association with the "Unmonitored control circuitry associated with protective functions" as found in Table 1-5. By doing so, we feel that the risk of an undesired operation due to human error can be minimized and not degrade system reliability. 3. If sudden pressure relays are exempt from the Standard, the DC circuitry for those relays should also be exempt.

Response: Thank you for your comments.

1. **The SDT's intent with the Requirement R1.4 (new Requirement R1.2) wording is to convey that the entity's PSMP must document that the monitoring attributes of any given component type meet the Table-specified monitoring attributes in order to justify exclusion of the maintenance activities and/or the lengthening of maintenance intervals as provided for in the Tables. PRC-005-2 does not have requirements for inclusion of detailed maintenance procedures in an entity's PSMP as the tables within the standard have taken the place of the "summary of maintenance and testing procedures" required by R1.2 of PRC-005-1.**
2. **The SDT believes that electromechanical lockout relays need periodic operation in order to remain reliable. As such, these devices are required to be exercised at the same 6 year interval required for electromechanical relays. The SDT recognizes the risk of human error trips when working with testing of lockout devices but believes these risks can be managed. Performance-based maintenance is an option if you want to extend your intervals beyond 6 years. The SDT, however, has modified Table 1-5 to remove other auxiliary relays, etc, from this activity, and clarified that the verification of such devices is included within the 12-year unmonitored control circuitry verification.**
3. **The trip path from a sudden pressure device is a part of the Protection System control circuitry. The sensing element is**

omitted from PRC-005-2 testing requirements because the SDT is unaware of industry recognized testing protocol for the sensing elements. The SDT believes that Protection Systems that trip (or can trip) the BES should be included. This position is consistent with the currently-approved PRC-005-1, consistent with the SAR for Project 2007-17, and the SDT understands this to be consistent with the position of FERC staff.		
International Transmission Company Holdings Corp	Affirmative Ballot	While voting "Affirmative" on this ballot, ITC continues to have concerns with testing intervals. These comments have been submitted via the Comment Form associated with this project.
Response: Thank you for your affirmative vote. Please see our responses to our comments elsewhere in this report.		
Occidental Chemical	Affirmative Ballot	If you have any other comments on this Standard that you have not already provided in response to the prior questions, please provide them here. Ingleside Cogeneration, LP, continues to believe that the six year requirement to verify channel performance on associated communications equipment will prove to be more detrimental than beneficial on older relays. Clearly newer technology relays which provide read-outs of signal level or data-error rates will easily verified, but the tools which measure power levels and error rates on non-monitored communication links are far more intrusive. After the technician uncouples and re-attaches a fiber optic connection, the communications channel may be left in worse shape after verification than it was prior to the start of the test.
Response: Thank you for your comment and affirmative vote. **There are less intrusive ways to verify channel performance that do not require disconnecting communication terminations. It is up to the entity to determine specific maintenance techniques.**		

Oncor Electric Delivery	Affirmative Ballot	PRC-005-2 is a vast improvement over the vagueness of the existing standard (PRC-005-1), that the new standard makes compliance much easier than the present standard. The new standard recognizes the advances in relay technology and reliability, particularly the benefits of microprocessor based relays. The standard also provides greater flexibility on its implementation while recognizing the benefits of a performance based methodology, particularly as it relates to battery testing. The revised standard eliminates the requirement for a "summary of maintenance and testing procedures" which was vague and provided no real value to the registered entities. Operational and administrative efficiencies can be realized by consolidating the relay testing and maintenance requirements into one standard (PRC-005-1, PRC-008-0, PRC-011-0, PRC-017-0)
Response: Thank you for your comment and affirmative vote.		
Public Utility District No. 2 of Grant County	Affirmative Ballot	We are ok with this standard, however, we would like to see some recognition of the use of non-calendar based maintenance practices such as predictive maintenance practices or condition based maintenance practices. When you use one of those methodologies for the basis for your plant maintenance it is very labor intensive to interpret those results to a calendar based requirement.
Response: Thank you for your comment and affirmative vote. **Please see Sections 5, 6, and 7 of the Supplementary Reference and FAQ for a discussion of how the SDT has attempted to incorporate condition-based maintenance practices (utilizing installed monitoring capabilities) and performance-based maintenance practices within PRC-005-2.**		
Tacoma Public Utilities	Affirmative Ballot	1. The implementation plan for R2 and R3 is unclear on whether each maintenance activity has its own implementation schedule. The implementation plan can also be interpreted to mean that the implementation schedule for a given protection system component is driven by the smallest maximum maintenance (allowable) interval. For example, for unmonitored communications systems, it is unclear whether all maintenance activities indicated in Table 1-2, including those corresponding to 6 calendar years, must be completed on all unmonitored communications systems by the first calendar quarter 15 months following applicable regulatory approval, or if this timeline only applies to the maintenance activity specified in Table 1-2 corresponding to a maximum maintenance interval of 4 calendar months.

		2. Assuming that there is a different implementation schedule for different maintenance activities for some protection system component types (namely station dc supply and communication systems), the middle bullet on page 1 of the implementation plan does not seem to consider that it may not be possible to identify whether some protection system components are completely being addressed by PRC-005-2 or the Program developed for the previous standards. In other words, during implementation, some maintenance activities for the same protection system component may be addressed by PRC-005-2, while other maintenance activities may be addressed by the Program develoepd for the previous standards.
		3. It is unclear whether control circuitry (trip paths) from protective relays that respond to mechanical quantities is included. This issue is addressed in the supplementary reference but is vague in the draft standard itself.
		4. This draft of PRC-005-2 requires the Protection System Maintenance Program (PSMP) to “include all applicable monitoring attributes and related maintenance activities” per the Tables and requires an entity to “implement and follow its PSMP.” Under the draft standard, it is unclear whether an entity has to document in the PSMP and/or maintenance records how they accomplish(ed) the maintenance activities or simply to indicate that the maintenance activities are included and have been completed within the defined intervals. It is clear that entities are afforded some latitude in how they conduct the required maintenance activities. However, the level of detail required to document (1) how an entity chooses to perform the maintenance activities and (2) that applicable maintenance activities have been completed is not clear.
		5. In Table 1-2, there is a maintenance activity related to communication systems to “verify essential signals to and from other Protection System components.” It is unclear if this statement is referring to control circuitry associated with the communication system end devices, end device input and output operation (as in Table 1-1 for protective relays), or something else. It is recommended that the requirement be to “verify operation of communication system inputs and outputs that are essential to proper functioning of the Protection System.” This language is consistent with that used for protective relays in Table 1-1.

		6. Referring to Table 1-2, it is unclear whether an entity has the sole authority decide which 'performance criteria' are 'pertinent.' Additionally, it is unclear if an entity must document the 'communications technology applied' and the associated 'performance criteria' in its PSMP.
		7. In Table 1-4, it is unclear if there is a distinction between the terms 'resistance' and 'ohmic values.' If there is a distinction, then this distinction should be clarified.
		8. In Table 1-4, it is unclear if there is a distinction between the terms 'battery terminal connection resistance' and 'unit-to-unit connection resistance.' If there is a distinction, then this distinction should be clarified.
		9. In Table 1-4, replace the term 'resistance' with 'impedance.'
		10. Recommend that the 6 calendar month interval in Table 1-4(b) be lengthened to 18 calendar months to be more consistent with similar maintenance activities for other battery types. At minimum, lengthen the interval to at least 7 calendar months in a similar way that 3 calendar months was lengthened to 4 calendar months for other maintenance activities.
		11. Referring to Table 1-5, no periodic maintenance is required for "control circuitry whose continuity and energization or ability to operate are monitored and alarmed." It is unclear whether or not it is acceptable to verify DC voltage at the actuating device trip terminals at least once every 12 calendar years for "unmonitored control circuitry associated with protective functions." It is recommended that periodically verifying DC voltage in this manner be an acceptable means of accomplishing the maintenance activity identified in Table 1-5 for unmonitored control circuitry associated with protective functions.
		12. Referring to 4.2. Facilities of the draft standard, it is unclear whether protection systems for transformers that step down from over 100kV to below 15kV are applicable to the standard. Even if there are normally-open distribution feeder ties for purposes of transferring load in a make-before-break fashion, these transformers are generally not considered BES elements.
		13. Referring to 4.2.5 of the draft standard, it is unclear whether protection for generator excitation systems are applicable to the standard.

		14. It is unclear whether external timing relays (e.g., Zone 2) are considered control circuitry components (like lockout and auxiliary relays) or protective relay components.
Response:	**Thank you for your comments.**	
	1. The SDT agrees with your observation and has changed the relevant parts of the implementation plan to clarify that they apply to the maintenance activities for the relevant maintenance intervals	
	2. The SDT agrees with your observation and has revised the Implementation plan to clarify.	
	3. The trip paths from protective relays that respond to mechanical quantities and are intended to detect faults are a part of the Protection System control circuitry. The sensing elements are omitted from PRC-005-2 testing requirements because the SDT is unaware of industry recognized testing protocols for these sensing elements. The SDT believes that Protection Systems that trip (or can trip) the BES should be included. This position is consistent with the currently-approved PRC-005-1, consistent with the SAR for Project 2007-17, and the SDT understands this to be consistent with the position of FERC staff. Note that trip signals from devices sensing mechanical parameters not directly indicative of an electrical fault need not be tested per this standard.	
	4. The SDT has removed parts 1.1 and 1.3 from Requirement R1, addressing part of your comment. The SDT agrees that PRC-005-2 allows some leeway in how an entity fulfills the testing requirements of the standard. Section 15 of the Supplementary Reference and FAQ document provides numerous examples of possible testing techniques for the various component types making up a Protection System. An entity's PSMP should clearly define how the testing requirements of the standard are fulfilled. The Measures for each requirement, as well as Section 15.8 of the Supplementary Reference and FAQ document, provide some examples of possible compliance documentation for completion of testing.	
	5. The SDT agrees with your suggestion and has changed the standard accordingly.	
	6. The entity has the authority to establish its own acceptable performance criteria. This criteria does not need to be in the PSMP, but should reside somewhere within the maintenance documentation.	

	7. As utilized on Table 1-4, the term "ohmic value" is a generic reference to the measurement of a battery cell or units ability to pass current flow. This may be done using conductance, resistance or impedance measurements; the various battery test equipment manufacturers use different measurement methods and the term "ohmic value" is meant to be technology neutral. See FAQ on page 78 of the Supplementary Reference and FAQ document. The term "resistance" as used in Table 1-4 refers specifically to the dc resistance of the battery terminal connections and the battery intercell/inter-unit physical connectors. See related FAQ on pages 74-75 of the Supplementary Reference and FAQ document.
	8. Battery terminal connection resistance is a measurement of the resistance of a connection at a battery terminal. Battery intercell or unit-to-unit connection resistance is a measurement of the resistance of the external conductor interconnecting two adjacent battery cells or two adjacent multi-cell battery units. The SDT believes these are common battery maintenance terms used throughout the industry.
	9. The SDT disagrees and believes that resistance as used in Table 1-4 is the appropriate term for the parameters to be measured and is consistent with standard battery system maintenance terminology.
	10. The SDT disagrees with your recommendation to standardize maintenance intervals between different battery types that have distinctly different failure mechanisms. See related FAQ on pages 80-81 of the Supplementary Reference and FAQ document for further discussion of requirements for ohmic measurements of VRLA batteries. Concerning your recommendation to allow for 7 calendar months, the SDT believes that the six-month interval specified is appropriate.
	11. The SDT has modified this specific portion of the Table, and believes that the modifications address your concern. Please see Section 15.3 of the Supplementary Reference and FAQ document for a discussion of this topic.
	12. The standard does not include the Protection Systems for transformers that step down from over 100kV to below 15kV if these transformers are not BES elements. If Protection Systems are installed for purposes of detecting Faults on BES elements, these Protection Systems are included.
	13. Paragraph 4.2.5.1 indicates that the excitation system protection system would only be in scope if the excitation system generates signals that trip the generator output breaker either directly or via lockout or auxiliary tripping relays.

	14. As timing is critical to proper Protection System function, timers are considered protective relays.	
Wisconsin Electric Power Co. Wisconsin Electric Power Marketing	Affirmative Ballot	Do we need to track the maintenance of another owner's Protection System Component which is part of my Protection System? For example, if our Protection System includes and trips another owner's circuit breaker, do we need to track maintenance and testing for that circuit breaker?
Response: Thank you for your comment and affirmative ballots. **The owner is responsible for the maintenance of Protection System Components. You do not need to track the maintenance of other owner's Protection System Components.**		
Beaches Energy Services	Negative Ballot	1. Standard requires 100% perfection, e.g., missing any one interval for any one piece of equipment leads to a violation. This is; however, mitigated by the fact that the intervals are long enough to allow implementation of business practices with shorter intervals to add some "buffer".

		2. The "Applicability" section is not consistent with the recent Y-W and Tri-State PRC-005 interpretation (Project 2009-17). The Applicability 4.2.1 states that the standard includes: "Protection Systems that are installed for the purpose of detecting faults on BES Elements (lines, buses, transformers, etc.)" whereas the Y-W and Tri-State interpretation basically says that "transmission Protection Systems" both detect AND trip BES Elements; Hence, the new standard alters the existing "and" statement in the Y-W and tri-State interpretation and eliminates the consideration of tripping BES Elements from applicability. This will have the consequence of including Protection Systems on step-down transformers that "look backwards" into the BES system as applicable to the standard. For instance, a distribution network fed from multiple transmission interconnections will have protective relaying (directional overcurrent most likely) to look backwards into the transmission system to trip the step-down transformer to prevent back-feed from the distribution network). This step-down transformer protection would be included in the new standard because it's purpose to the detect faults on the BES (event though the purpose of the protection is actually to protect overloading of the distribution and for worker safety on the BES); whereas the Y-W and Tri-State interpretation excludes that protection from the existing PRC-005-1 standard.

Response: Thank you for your comments.

1. **The NERC criteria for VSLs do not currently permit them to allow some level of non-performance without being in violation. The graded approach of the VSL for Requirement R3 allows the RE to provide discretion when assessing severity of the violation when only a relatively small number of maintenance activities have been missed.**
2. **The SDT believes that the Applicability as stated in PRC-005-2 is correct and that it supports the reliability of the BES. The SDT observes that the approved Interpretation addresses the term, “transmission Protection System”, and notes that this term is not used within PRC-005-2; thus the interpretation does not apply to PRC-005-2. PRC-005-2 specifically addresses “Protection Systems that are installed for the purpose of detecting faults on BES Elements.” Please see Section 2.3 of the Supplementary Reference and FAQ document for additional discussion. If, as in your example, a protective relay is installed to prevent back feeding (rather than for detecting BES faults), it would not be applicable even if it has a secondary result of incidentally detecting faults on the BES.**

Florida Municipal Power Pool	Negative Ballot	1. Standard requires 100% perfection, e.g., missing any one interval for any one piece of equipment leads to a violation. This is; however, mitigated by the fact that the intervals are long enough to allow implementation of business practices with shorter intervals to add some "buffer", e.g., if the standard says an interval is 6 years, then, through business practice we can shorten actual maintenance and testing intervals to something like 4 years to allow ourselves a 2 year buffer to catch equipment that may have been missed due to difficulty in scheduling outages and the like. Does not cause us to vote negative.
	Negative Poll	2. The "Applicability" section is not consistent with the recent Y-W and Tri-State PRC-005 interpretation (Project 2009-17). The Applicability 4.2.1 states that the standard includes: "Protection Systems that are installed for the purpose of detecting faults on BES Elements (lines, buses, transformers, etc.)" whereas the Y-W and Tri-State interpretation basically says that "transmission Protection Systems" both detect AND trip BES Elements; Hence, the new standard alters the existing "and" statement in the Y-W and tri-State interpretation and eliminates the consideration of tripping BES Elements from applicability. This will have the consequence of including Protection Systems on step-down transformers that "look backwards" into the BES system as applicable to the standard. For instance, a distribution network fed from multiple transmission interconnections will have protective relaying (directional overcurrent most likely) to look backwards into the transmission system to trip the step-down transformer to prevent back-feed from the distribution network). This step-down transformer protection would be included in the new standard because it's purpose to the detect faults on the BES (event though the purpose of the protection is actually to protect overloading of the distribution and for worker safety on the BES); whereas the Y-W and Tri-State interpretation excludes that protection from the existing PRC-005-1 standard. Causes us to vote Negative.

Response: Thank you for your comments.

1. **The NERC criteria for VSLs do not currently permit them to allow some level of non-performance without being in violation. The graded approach of the VSL for Requirement R3 allows the RE to provide discretion when assessing severity of the violation when only a relatively small number of maintenance activities have been missed.**
2. **The SDT believes that the Applicability as stated in PRC-005-2 is correct and that it supports the reliability of the BES. The SDT observes that the approved Interpretation addresses the term, "transmission Protection System", and notes that this term is not used within PRC-005-2; thus the interpretation does not apply to PRC-005-2. PRC-005-2 specifically addresses "Protection Systems that are installed for the purpose of detecting faults on BES Elements." Please see Section 2.3 of the Supplementary Reference and FAQ document for additional discussion. If, as in your example, a protective relay is installed to prevent back feeding (rather than for detecting BES faults), it would not be applicable even if it has a secondary result of incidentally detecting faults on the BES.**

Constellation Power Source Generation, Inc.	Negative Ballot Negative Poll	Constellation Power Generation is voting against the approval of this standard because, from a generation perspective, the maintenance intervals and activities described in all of the Tables are too prescriptive. Constellation Power Generation is concerned that the Tables may conflict with the existing PSMPs built by Registered Entities based on years of operational experience with the testing methods and testing frequencies that work best for the specific asset. In the worst case, the specifics dictated in the Tables may move Entities away from more stringent PSMPs that are currently in practice. For this reason, Constellation Power Generation suggests that the drafting team revisit the concept of the Tables to better convey useful guidance without creating a compliance requirement that may be contrary to improved reliability. The Registered Entity should be given more flexibility to dictate how a protection system component should be tested, and at what frequency. Furthermore, the technical manpower and compliance documentation demands to implement a performance based protection system maintenance program are so onerous that it is highly unlikely that any small generation entity would use it. Please refer to Constellation Power Generation's submitted comments for other issues identified with this standard.

Response: Thank you for your comment.

FERC Order 693 and the approved SAR assign the SDT to develop a standard with maximum allowable intervals and minimum maintenance activities. The intervals and activities specified are believed by the SDT to be technically effective, in a fashion that may be consistently monitored for compliance.

Duke Energy/ Fort Pierce Utilities Authority	Negative Ballot	Duke Energy disagrees with the wording in the Applicability section 4.2.1. The wording change from PRC-005-2 draft 4 to PRC-005-2 draft 5 expands the reach of the standard to relaying schemes that detect faults on the BES but are not intended to provide protection for the BES. Duke Energy's standard protection scheme for dispersed generation at retail stations would be subject to the standard due to the changes in section 4.2.1. These protection schemes are design to detect faults on the BES, but do not operate BES elements nor do they interrupt network current flow from the BES. In the most recent draft the relays, current transformers, potential transformers, trip paths, auxiliary relays, batteries, and communication equipment associated with the dispersed generation protection scheme would be subject to the requirements in PRC-005-2. Previous drafts of the standard would not have required Duke Energy to maintain the protection system components associated with dispersed generation schemes at retail stations in accordance to the requirements in PRC-005-2. The new wording in section 4.2.1 would add significant O&M costs and resource constraints due to the inclusion of protection system devices at retail stations without increasing the reliability of the BES. Duke Energy does not believe it was the intent of the standard to include elements that did not have an impact on the reliability of the BES. Duke Energy would prefer the definition used in PRC-005-1A Appendix 1 "any Protection System that is installed for the purpose of detecting faults on transmission elements (lines, buses, transformers, etc.) identified as being included in the Bulk Electric System (BES) and trips an interrupting device that interrupts current supplied directly from the BES."

Response: Thank you for your comment.

The SDT believes that the Applicability as stated in PRC-005-2 is correct and that it supports the reliability of the BES. The SDT observes that the approved Interpretation addresses the term, "transmission Protection System", and notes that this term is not used within PRC-005-2; thus the interpretation does not apply to PRC-005-2. PRC-005-2 specifically addresses "Protection Systems that are installed for the purpose of detecting faults on BES Elements." Please see Section 2.3 of the Supplementary Reference and FAQ document for additional discussion.

Lakeland Electric	Negative Ballot	First Concern is that evidence of maintenance and testing at this level will be very difficult to obtain, track and report. Second is the word exercise - what is really meant by this. This may be difficult or impossible to do without impacting or tripping the circuit. The "Applicability" section is not consistent with the recent Y-W and Tri-State PRC-005 interpretation (Project 2009-17).
Response: Thank you for your comments 1. **FERC Order 693 and the approved SAR assign the SDT to develop a standard with maximum allowable intervals and minimum maintenance activities. The intervals and activities specified are believed by the SDT to be technically effective, in a fashion that may be consistently monitored for compliance. Nonetheless, the SDT agrees that significant effort will be necessary to implement these requirements and to prove compliance.** 2. **The SDT is unsure to which utilization of the word "exercise" you refer.** 3. **The SDT believes that the Applicability as stated in PRC-005-2 is correct and that it supports the reliability of the BES. The SDT observes that the approved Interpretation addresses the term, "transmission Protection System", and notes that this term is not used within PRC-005-2; thus the interpretation does not apply to PRC-005-2. PRC-005-2 specifically addresses "Protection Systems that are installed for the purpose of detecting faults on BES Elements." Please see Section 2.3 of the Supplementary Reference and FAQ document for additional discussion.**		
Illinois Municipal Electric Agency	Negative Ballot	IMEA greatly appreciates SDT efforts to address/resolve issues, improve PRC-005, and consolidate various PRC Reliability Standards. However, IMEA is voting Negative based on the inconsistency between the current Applicability language and the PRC-004 and PRC-005 interpreation (Project 2009-17) recently approved by FERC. IMEA supports comments submitted by Florida Municipal Power Agency which address this inconsistency, and encourages the SDT to address this issue which is important to municipal entities.

Response: Thank you for your comment. **The SDT believes that the Applicability as stated in PRC-005-2 is correct and that it supports the reliability of the BES. The SDT observes that the approved Interpretation addresses the term, "transmission Protection System", and notes that this term is not used within PRC-005-2; thus the interpretation does not apply to PRC-005-2. PRC-005-2 specifically addresses "Protection Systems that are installed for the purpose of detecting faults on BES Elements." Please see Section 2.3 of the Supplementary Reference and FAQ document for additional discussion. If, as in your example, a protective relay is installed to prevent back feeding (rather than for detecting BES faults), it would not be applicable even if it has a secondary result of incidentally detecting faults on the BES.**		
Consumers Energy	Negative Ballot	R3 continues to have "...initiate resolution of unresolved maintenance issues." Initiate means to start or set going, it does not mean closure of the item. If a remediation project is initiated and not closed out in a timely manner an auditor could penalize an entity based on what the auditor considers timely. We suggest definitive language indicating closure of the unresolved maintenance issue. Also, it would be beneficial to specify time frame for closing the issue.
Response: Thank you for your comment. **PRC-005-2 only requires the entity "… initiate resolution" of the issue found. The SDT recognizes that performance of the activities necessary to resolve an issue are entirely dependent upon the circumstances surrounding that issue and, consequently, will require varying amounts of resources and time to complete the process. The SDT has clarified the intent of the requirement to initiate resolution of Unresolved Maintenance Issues by including it separately as Requirement R5 and revising the language such that the responsible entity must demonstrate its efforts to correct Unresolved Maintenance Issues. Demonstrating the entity has initiated resolution can include such things as documentation of a work order, replacement component order, invoice, or purchase order, etc… Producing evidence of this nature would then indicate adherence to the requirement.**		

Florida Keys Electric Cooperative Assoc.	Negative Ballot	The "Applicability" section is not consistent with the recent Y-W and Tri-State PRC-005 interpretation (Project 2009-17). The Applicability 4.2.1 states that the standard includes: "Protection Systems that are installed for the purpose of detecting faults on BES Elements (lines, buses, transformers, etc.)" whereas the Y-W and Tri-State interpretation basically says that "transmission Protection Systems" both detect AND trip BES Elements; Hence, the new standard alters the existing "and" statement in the Y-W and tri-State interpretation and eliminates the consideration of tripping BES Elements from applicability. This will have the consequence of including Protection Systems on step-down transformers that "look backwards" into the BES system as applicable to the standard. For instance, a distribution network fed from multiple transmission interconnections will have protective relaying (directional overcurrent most likely) to look backwards into the transmission system to trip the step-down transformer to prevent back-feed from the distribution network). This step-down transformer protection would be included in the new standard because it's purpose to the detect faults on the BES (event though the purpose of the protection is actually to protect overloading of the distribution and for worker safety on the BES); whereas the Y-W and Tri-State interpretation excludes that protection from the existing PRC-005-1 standard.
Response: Thank you for your comment. **The SDT believes that the Applicability as stated in PRC-005-2 is correct and that it supports the reliability of the BES. The SDT observes that the approved Interpretation addresses the term, “transmission Protection System”, and notes that this term is not used within PRC-005-2; thus the interpretation does not apply to PRC-005-2. PRC-005-2 specifically addresses “Protection Systems that are installed for the purpose of detecting faults on BES Elements.” Please see Section 2.3 of the Supplementary Reference and FAQ document for additional discussion.**		

Independent Electricity System Operator	Negative Ballot	The IESO disagrees with the concept that auditors use the standards as minimum requirements and evaluate compliance based on a registered entity's own governance. We believe that the entity could be found non-compliant with Requirement R3 if they fail to follow the internal maintenance intervals established in their PSMP, even though actual maintenance intervals are no less frequent than the prescribed maximum intervals established in the draft standard. The potential for such a finding will discourage conscientious entities from setting higher internal targets for their planned maintenance and promote compliance with only the minimum requirements of the standard. We therefore propose the following revision to Requirement R3: R3. Each Transmission Owner, Generator Owner, and Distribution Provider shall implement and follow its PSMP and initiate resolution of any unresolved maintenance issues. In the case of time-based maintenance programs, each Transmission Owner, Generator Owner, and Distribution Provider is permitted to deviate from its PSMP provided that actual maintenance intervals do not exceed those specified in Tables 1-1 through 1-5, Table 2 and Table 3. [Violation Risk Factor: High] [Time Horizon: Operations Planning]
Response: The standard and the Supplementary Reference and FAQ document have been changed to address your concerns. Specifically, Requirement R1 part 1.3 has been removed; Requirement R3 has been revised so that, for time-based programs, entities shall comply with the tables; Requirement R4 has been added to address performance-based maintenance, and Requirement R5 has been added to address Unresolved Maintenance Issues.		
Florida Municipal Power Agency	Negative Ballot	We have three remaining concerns. The second concern leads us to recommend a negative vote.

	Negative Poll	1. Standard requires 100% perfection, e.g., missing any one interval for any one piece of equipment leads to a violation. This is; however, mitigated by the fact that the intervals are long enough to allow implementation of business practices with shorter intervals to add some "buffer", e.g., if the standard says an interval is 6 years, then, through business practice we can shorten actual maintenance and testing intervals to something like 4 years to allow ourselves a 2 year buffer to catch equipment that may have been missed due to difficulty in scheduling outages and the like. Does not cause us to vote negative.
		2. The "Applicability" section is not consistent with the recent Y-W and Tri-State PRC-005 interpretation (Project 2009-17). The Applicability 4.2.1 states that the standard includes: "Protection Systems that are installed for the purpose of detecting faults on BES Elements (lines, buses, transformers, etc.)" whereas the Y-W and Tri-State interpretation basically says that "transmission Protection Systems" both detect AND trip BES Elements; Hence, the new standard alters the existing "and" statement in the Y-W and tri-State interpretation and eliminates the consideration of tripping BES Elements from applicability. This will have the consequence of including Protection Systems on step-down transformers that "look backwards" into the BES system as applicable to the standard. For instance, a distribution network fed from multiple transmission interconnections will have protective relaying (directional overcurrent most likely) to look backwards into the transmission system to trip the step-down transformer to prevent back-feed from the distribution network). This step-down transformer protection would be included in the new standard because it's purpose to the detect faults on the BES (event though the purpose of the protection is actually to protect overloading of the distribution and for worker safety on the BES); whereas the Y-W and Tri-State interpretation excludes that protection from the existing PRC-005-1 standard. Causes us to vote Negative.

		3. The standard reaches further into the distribution system than we would like for UFLS and UVLS (Table 3). We have two parts to this concern. First, it will be somewhat onerous to present all the evidence of distribution class protection system maintenance and testing at audits. And second, our biggest concern is in the testing required to "exercise" a lockout or tripping relay. This may require installation of test blocks to allow such exercising of the lockout or tripping relay without tripping the distribution circuit, and such a test could be difficult to perform without impacting customer continuity of service if the lockout/tripping relay for the UFLS is the same as the lockout/tripping relay for distribution fault protection. However, most of FMPA's members have microprocessor-based relays for distribution circuits with the UFLS / UVLS embedded within the microprocessor based relay where the path from the UFLS / UVLS relay to the lockout / tripping relay is internal to the micro-processor based relay, so, testing the UFLS/UVLS relay will at the same time test the internal lockout / switching relay. However, for older electro-mechanical UFLS schemes, this type of testing could be problematic. Borderline concerning whether this causes us to vote Negative or not. As a result, FMPA recommends a Negative vote with the second and third comments, emphasizing that it is the second comment that causes us to vote negative but we also would like the 3rd comment addressed. Feedback appreciated. Vote and comments are due next Wednesday, 9/28.

Response: Thank you for your comments

1. **The NERC criteria for VSLs do not currently permit them to allow some level of non-performance without being in violation. The graded approach of the VSL for Requirement R3 allows the RE to provide discretion when assessing severity of the violation when only a relatively small number of maintenance activities have been missed.**
2. **The SDT believes that the Applicability as stated in PRC-005-2 is correct and that it supports the reliability of the BES. The SDT observes that the approved Interpretation addresses the term, "transmission Protection System", and notes that this term is not used within PRC-005-2; thus the interpretation does not apply to PRC-005-2. PRC-005-2 specifically addresses "Protection Systems that are installed for the purpose of detecting faults on BES Elements." Please see Section 2.3 of the Supplementary Reference and FAQ Document for additional discussion. If, as in your example, a protective relay is installed to prevent back feeding (rather than for detecting BES faults), it would not be applicable even if it has a secondary result of incidentally detecting faults on the BES.**
3. **UVLS and UFLS systems are required to be included as part of the Project 2007-17 Standard Authorization Request (SAR). The SDT believes that electromechanical lockout relays require periodic operation. As such, these devices are required to be exercised at the 12 year interval for UVLS and UFLS systems. The SDT recognizes the risk of human error trips when working with testing of lockout devices but believes these risks can be managed.**

Lakeland Electric	Negative Poll	The "Applicability" section is not consistent with Tri-State PRC-005 interpretation.

Response: Thank you for your comments

The SDT believes that the Applicability as stated in PRC-005-2 is correct and that it supports the reliability of the BES. The SDT observes that the approved Interpretation addresses the term, "transmission Protection System", and notes that this term is not used within PRC-005-2; thus the interpretation does not apply to PRC-005-2. PRC-005-2 specifically addresses "Protection Systems that are installed for the purpose of detecting faults on BES Elements." Please see Section 2.3 of the Supplementary Reference and FAQ document for additional discussion.

Liberty Electric Power LLC	Negative Ballot	With the development and publication of maximum maintenance and testing intervals (the Tables), there is no longer a reliability need for a RE to identify the associated time-based maintenance intervals for Protection System Components. Further, REs who wish to perform these activities in shorter intervals than those allowed by the standard risk non-compliance (See Supplementary Reference, page 27,"If your PSMP (plan) requires activities more often than the Tables maximum then you must perform and document those activities to your more stringent standard.")If the entity completes all activities within the maximum interval allowed by the standard, there can be no reliability concern; if there is a reliability issue, then the table interval is incorrect. I would suggest the following changes.
		1. Change R1.2 to read "Identify any Protection System component where the RE is using a performance based maintenance interval. No batteries associated with the station DC supply component type of Protection System shall be included in a performance based system"
		2. Change R1.3 to read "The intervals for time-based programs are established in Table 1-1 through 1-5, Table 2, and Table 3".
		3. Change M1 to add the phrase "for performance-based components" after the words "maintenance intervals".
		4. In M1, replace the words "the type of maintenance program applied (time-based, performance based, or a combination of these maintenance methods") with the words "the identification of any protection system components using performance based intervals".
Response: The standard and the Supplementary Reference and FAQ document have been changed to address your concerns. Specifically, Requirement R1 part 1.3 has been removed; Requirement R3 has been revised so that, for time-based programs, entities shall comply with the tables; Requirement R4 has been added to address performance-based maintenance, and Requirement R5 has been added to address Unresolved Maintenance Issues. The Measures have also been revised.		
Manitoba Hydro	Negative Ballot	Manitoba Hydro is voting negative for the following reasons:

		1. Grace Periods Grace periods should be permitted on the maintenance time intervals. While we understand that grace periods can be built into a PSMP, maintenance decisions that compromise reliability may still have to be made just to meet the specified time intervals and avoid penalty. An example of this would be removing a hydraulic generator from service at a time of low reserve to meet a maintenance interval and avoid non-compliance. Grace periods are also required in the case of extreme weather conditions. Such conditions may make it unsafe to perform maintenance within the maintenance interval (for example, performing a battery inspection at a remote station during severe winter weather) or may create a risk to reliability if the equipment being maintained is removed from service during these conditions. Utilities need to retain a reasonable amount of discretion and flexibility to make maintenance decisions that are best for safety and reliability without risking non-compliance. In addition, we disagree with the basis that the Drafting Team has established that grace periods are not permitted because of FERC Order 693 which requires that 'maximum' time intervals are established within PRC-005-2. With grace periods, a maximum time interval obviously becomes the required maintenance interval plus the maximum permitted grace period. So we strongly feel that grace periods can be added to the standard while adhering to the FERC Order. We also disagree with the line of reasoning that the Drafting Team used to establish the maximum maintenance intervals for relays as outlined on page 38 of the Supplementary Reference and FAQ document. To our knowledge, no document has been produced which provides evidence of maximum time intervals that work well for 'maintenance cycles that have been in use in generator plants for decades'. Our Protection Systems Maintenance experience indicates that the proposed intervals are acceptable as nominal time intervals with grace periods, but not as maximum time intervals without grace periods. Without a grace period, the bulk of protection maintenance on a six year maintenance cycle will have to be done one year earlier than previously required, in order to allow for the last year of the maximum interval to be used as the grace period. Manitoba Hydro considers this an unnecessary burden on resources with no benefit to reliability. Manitoba Hydro recommends that grace periods be permitted within PRC-005-2 if an entity can demonstrate a reliability or safety related need for using a grace period. This would require the Drafting Team to develop reliability-related criteria for using a grace period.

		2. Phased Implementation Plan Manitoba Hydro does not agree with the prescribed phased implementation plan. Entities should be given a single compliance date for each of the maintenance intervals, and be allowed the flexibility to schedule and complete their maintenance as required while transitioning to the defined time intervals in PRC-005-2. For example, if a maximum maintenance interval is 6 calendar years, the implementation plan should only require that "The entity shall be 100% compliant on the first day of the first calendar quarter 84 months following applicable regulatory approval, or in those jurisdictions where no regulatory approval is required, on the first day of the first calendar quarter 96 months following Board of Trustees adoption." (item 4c.). The existing standard PRC-005-1 already requires protection systems to be maintained as part of a program. Prescribing how an entity must reach full compliance will provide a negligible improvement in reliability, while significantly increasing the compliance burden. PRC-005-2 affects a large number of assets, and proving compliance for prescribed percentages of assets during the transition period creates unnecessary overhead with no added value. We suggest that items 3a., 3b., 4a., 4b., 5a. and 5b be removed from the implementation plan and that NERC measure progress on reaching PRC-005-2 intervals using means other than Compliance measures such as industry surveys.

Response: Thank you for your comments.

1. **FERC Order 693 directs NERC to establish maximum allowable intervals. The SDT believes a "grace period" process as you describe would not satisfy this directive. In essence, by specifying maximum allowable intervals the SDT is leaving the establishment of normal maintenance intervals and grace periods to the entities discretion and to what works best for their scheduling needs and program flexibility. Alternatively, if the SDT believes that 6 calendar years is the maximum allowable interval for a given maintenance activity, it could have done as you suggested and defined a 4 year "normal" interval with a 2 year grace period for a maximum allowable interval of 6 years. The SDT believes the management of normal maintenance intervals and grace periods is best left to the entity's PSMP and thus chose only to specify the maximum allowed interval within which entities must comply. Note that if data is available to prove reliability is maintained, performance-based maintenance is available to achieve longer maintenance intervals.**
2. **The SDT believes that it is not practical for all entities to rapidly transition all of their Protection Systems to the new program, especially with some component types on maintenance intervals of up to 12 years. Nonetheless, all in-scope Protection Systems must be maintained by either a PRC-005-1 program or a PRC-005-2 program. The SDT believes the phased approach mapped out in the Implementation plan is practical. If an entity wishes to implement PRC-005-2 on a more rapid rate than laid out in the Implementation plan to lessen the complexity of documentation requirements, they are free to do so.**

Muscatine Power & Water	Negative Ballot	1. Section D.1.3, in Data Retention, requires an entity to retain the two most recent performances of each distinct maintenance activity. This is an unreasonable and problematic requirement and does not enhance reliability. Recommend the data retention be changed to require only the most recent test record. A compliance audit should be focused on the present day and not in the past. PRC-005-2 allows testing intervals of up to 12 calendar years. If we are required to have the two most recent test results, we could conceivably have to retain a relay test record for up to 24 years! Hypothetically, if we have a test record from ten years ago, but we do not have the record from 12 years before that, how does that adversely affect the reliability of the BES today? The standard should focus on – Is the Entity compliant TODAY?
		2. Table 1-5 requires a maintenance activity to, “Verify that each trip coil is able to operate the circuit breaker, interrupting device, or mitigating device.” Recommend this be changed to, “Verify that a trip coil is able to operate the circuit breaker, interrupting device, or mitigating device.” Alternately, change the wording to, “Electrically operate each interrupting device every 6 years.” While requiring each trip coil to operate the breaker sounds good in theory, however, it creates issues in the field and may create more problems than it solves. The trip coils are located in the panel at the breaker and are not configured to test independently. Isolating one trip coil from the other may include “lifting a wire” that may not get landed properly when the test is complete. Using an actual event only tests one coil and we may not know which coil tripped the device. The current language is a recipe for a compliance violation. The standard should focus on ensuring the control circuitry is intact and trips the breaker without injecting additional, unneeded risk to the BES.
		3. In the tables for dc Supply the term “unit-to-unit” is used along with “intercell” when referring to measurement of connection resistance. From the applicable IEEE standards (e.g. IEEE 450), the standard terminology seems to be “intercell”. It is recommended that the “unit-to-unit” term be removed to avoid confusion regarding what is to be verified.

Response: Thank you for your comments. **1. In order that a Compliance Monitor can be assured of compliance, the SDT believes that the Compliance Monitor will need the data of the most recent performance of the maintenance, as well as the data of the preceding one to validate that entities have been in compliance since the last audit (or currently, since the beginning of mandatory compliance). The SDT has specified the data retention in the posted standard to establish this level of documentation. This seems to be consistent with the current practices of several Regional Entities. Obviously, Compliance Monitors should not expect entities to be able produce records for maintenance performed prior to there being requirements for that maintenance to be performed.** **2. The description of the configuration of the second trip coil on circuit breakers you have provided is not typical of the redundant approach taken by most entities. Typically, second trip coils are electrically isolated from the first trip coil and are often fed by a separately fused dc control circuit with different relay trip output, lockout and auxiliary tripping contacts utilized in each circuit. The SDT believes that it is important that redundant trip paths be maintained within the indicated interval, and the prescribed interval already considers the reliability benefits of redundant equipment.** **3. The term "unit-to-unit" is used for the conductor utilized to connect one multi-celled battery jar to an adjacent multi-celled battery jar.**		
NorthWestern Energy	Negative Ballot	I recommend a no vote please see my comments below. 1. For Table 1-5 Trip coils or actuators of circuit breakers, interrupting devices, or mitigating devices 6 calendar years Verify that each trip coil is able to operate the circuit breaker, interrupting device, or mitigating device. Provisions need to be added to allow non-tripping checks of coils on the BES element that will Trip load. If I am reading the purposed correct the circuit switcher feeding distribution banks at or above 100kV will need to be tripped taking out load. 2. It was my understanding the IEEE standard 450 allowed for 7 year load test interval for VLA and NiCad batteries the standard calls out for 6 years. It appears that the standard has been recently updated and should be verified. My last objection is Table 1-2 3. Any unmonitored communications system necessary for correct operation of protective functions, and not having all the monitoring attributes of a category below. 4 calendar months Verify that the communications system is functional. 4 calendar months is excessive on annual maint and will discourage communications assisted tripping when not absolutely needed. 1 year is a more reasonable and doable timeline.

Response: Thank you for your comments.

1. **PRC-005-2 specifically addresses "Protection Systems that are installed for the purpose of detecting faults on BES Elements." If the Protection System in question is not protecting a BES component, it is not applicable to this standard. Please see Section 2.3 of the Supplementary Reference and FAQ document for additional discussion.**
2. **IEEE 450 only pertains to VLA batteries. IEEE 1106 pertains to NiCad batteries. The SDT believes that the 6 calendar year interval specified in PRC-005-2 is appropriate.**
3. **The SDT believes that performing this maintenance activity at 4 month intervals is proper for unmonitored communications systems.**

Seattle City Light	Negative Ballot	Regarding Voltage and Current Sensing Device Maintenance & Testing Activities: Table 1-3 of the standard lists the minimum required maintenance activities for voltage and current sensing devices as "Verify that current and voltage signal values are provided to the protective relay." Consistent with Table 1-3, Section 15.2.1 of the Supplementary Reference states that an entity "...must verify that the protective relay is receiving the expected values from the voltage and current sensing devices..." The Supplementary Reference further offers examples of how this requirement may be satisfied with most of the examples reference the need to verify the signal at each relay in the circuit. We recognize the need to verify a voltage signal at each protective relay, as these devices are wired in parallel and an open circuit at one location may not impact the other devices on the circuit. However, we do not agree that there is a need to verify a current signal at each protective relay. Current devices are wired in series; an open circuit at any location will impact all other devices on the circuit. For this reason, a single measurement of the current circuit is sufficient. We recommend updating Table 1-3 and the supplementary reference to account for the different physical characteristics of voltage and current circuits.

Response: Thank you for your comment.

An open circuit is not the only failure mechanism for a CT secondary circuit. Grounded CT secondary wiring can result in situations where accurate current is present in the part of the secondary circuit upstream of the ground but current would be shunted to ground and might not pass through devices downstream of the ground. Entities should not interpret PRC-005-2 as specifying "how" to test but rather that PRC-005-2 only specifies "what" to test.

Seminole Electric Cooperative, Inc.	Negative Ballot	We recommend the SDT consider an interval of 12 calendar years for the component in row 3, of Table 1-5 on page 19 of the standard. The maximum maintenance interval for "Electromechanical lockout and/or tripping devices which are directly in a trip path from the protective relay to the interrupting device trip coil" should be consistent with the "Unmonitored control circuit" interval which is 12 calendar years. In order to test the lockout relays, it may be necessary to take a bus outage (due to lack of redundancy and associated stability issues with delayed clearing). Increasing the frequency of bus outages (with associated lines or transformers) will also increase the amount of time that the BES is in a less intact system configuration. Increasing the time the BES is in a less intact system configuration also increases the probability of a low frequency, high impact event occurring. Therefore, the Maximum Maintenance Interval should be 12 years for lockout relays. We believe that, as written, the testing of "each" trip coil and the proposed maintenance interval for lockout testing will result in the increased amount of time that the BES is in a less intact system configuration. We sincerely hope that the SDT will consider these changes.
Response: Thank you for your comments. **The SDT believes it is possible to manage the risks that you describe and that performance of this testing will be an overall benefit to the reliability of the BES. It is the majority opinion of the subject matter experts forming the SDT that testing of electromechanical devices with moving parts such as lockout relays be performed on a 6 year interval. Entities may use the PBM process to extend this interval if they desire.**		
Tennessee Valley Authority	Negative Ballot	It will take several years for TVA to implement checkback on 590 carrier blocking sets on the TVA system and not have to perform the PRC 005-2 requirement of verifying functionality every 4 months with no grace period. TVA carrier failure rate has not increased since the frequency was changed in January 2008 from 4 tests/year to 2 tests/year. We are also implementing an extensive PM test in October 2011 which will test 25% of the sets per year and will take readings of SWR, line loss, and receiver margin.
Response: Thank you for your comment. **The SDT believes that performing this maintenance activity at 4 month intervals will benefit the reliability of the BES. The Implementation plan allows for 15 months after regulatory approvals for entities to implement the program per PRC-005-2. You may also find performance-based maintenance (per Requirement R2) useful.**		

Utility Services, Inc.	Negative Ballot	While we generally agree with most of the proposal, we are concerned about the need to address validate of Protection System settings in the standard. We believe that there should be an explicit requirement on validating the settings to ensure that misoperations don't occur due to incorrect settings being programmed into the devices. Reliability will be enhanced if misoperations can be avoided due to the explicit check on the accuracy of the settings.
Response: Thank you for your comment. **Rows 1 and 2 of Table 1-1 currently require verification that relay settings are as specified.**		
Westar Energy	Negative Ballot	Westar agrees in general with most of the changes and modifications included in the proposed Standard. Specifically, the change from 3 to 4 calendar months in Table 1-4. 1. However, we believe that the terms Distributed and Non-Distributed need to be more clearly defined. 2. Clarification is also needed on an entities ability to use fault initiated trips as evidence for Table 1-5 - Control Circuitry.
Response: Thank you for your comments. **1. Please see Section 8.1.1 on pg 25-26 of the Supplementary Reference and FAQ document for discussions of the terms "distributed" and "non-distributed".** **2. Please see paragraph 7 in Section 8.1.2 of the Supplementary Reference and FAQ document for further discussion of this topic.**		
Xcel Energy, Inc.	Negative Ballot	The VSL for R3 is confusing because of the lack of a specified time horizon. Are the percentages quoted on an annual schedule basis, an audit period, or a continuous percentage measurement of any previously scheduled maintenance activities? Greater clarity is needed on the intent of this VSL.
Response: Thank you for your comment. **The VSLs that use a graduated VSL have been revised based, in part, on the comments you have provided. The percentages relate to the number of violations reported within the compliance monitoring period relative to the number of components within that component type.**		

Xcel Energy, Inc.	Negative Ballot	I appreciate the effort the SDT has invested in bringing PRC-005 to ballot and refer them to comments submitted by FirstEnergy. I agree with FE that PRC-005 encourages entities to set a low bar when developing protective system maintenance programs and will penalize those with robust programs that miss self-imposed schedules or targets.
Response: The standard and the Supplementary Reference and FAQ document have been changed to address your concerns. Specifically, Requirement R1 part 1.3 has been removed; Requirement R3 has been revised so that, for time-based programs, entities shall comply with the tables; Requirement R4 has been added to address performance-based maintenance, and Requirement R5 has been added to address Unresolved Maintenance Issues.		
Tennessee Valley Authority	Negative Ballot	1. It will take several years for TVA to implement checkback on 590 carrier blocking sets on the TVA system and not have to perform the PRC 005-2 requirement of verifying functionality every 4 months with no grace period. TVA carrier failure rate has not increased since the frequency was changed in January 2008 from 4 tests/year to 2 tests/year. We are also implementing an extensive PM test in October 2011 which will test 25% of the sets per year and will take readings of SWR, line loss, and receiver margin.
		2. TVA disagrees with the requirement to measure internal ohmic values of the station dc supply batteries every 18 months. The interval should be 36 months. Our experience from performing our routine maintenance program including cell impedance testing at 3-year intervals has been that the program is fully adequate in monitoring bank condition. An 18-month interval for internal resistance/impedance testing is an unnecessary burden.
		3. Are we required to test the trip circuit between the power transformer sudden pressure relay and the switch house or are we only required to test the trip circuit between the electrical sensing relays and the trip coils of the breakers?

Response: Thank you for your comments.

1. **The SDT feels that performing this maintenance activity at 4 month intervals will benefit the reliability of the BES. The Implementation Plan allows for 15 months after regulatory approvals for entities to implement the program per PRC-005-2. You may also find that performance-based maintenance (per Requirement R2) useful.**
2. **The SDT believes the required 18 month interval is better in line with accepted industry practice. Please note that for VLA batteries, an entity may entirely avoid internal ohmic measurements by implementing a VLA maintenance program using 18 month visual inspections and 6 yr capacity tests.**
3. **The trip path from a sudden pressure device is a part of the Protection System control circuitry. The sensing element is omitted from PRC-005-2 testing requirements because the SDT is unaware of industry recognized testing protocol for the sensing elements. The SDT believes that Protection Systems that trip (or can trip) the BES should be included. This position is consistent with the currently-approved PRC-005-1, consistent with the SAR for Project 2007-17, and the SDT understands this to be consistent with the position of FERC staff.**

Northeast Power Coordinating Council		The focus of the industry is on the field procedures necessary to ensure that protection systems are maintained and tested. This includes the verification that settings have been applied correctly. The accuracy of the settings calculated needs to be validated, and that step should be considered for inclusion in this Standard.

Response: Thank you for comment.

Validating the accuracy of settings calculations is more properly a design function and not a maintenance function. The SDT agrees that validating relays are left with the intended settings programmed in is important; as such, Row 1 and Row 2 of Table 1-1 require that settings be verified to be as specified.

PNGC Comment Group		Thank you for the opportunity to comment on the draft Standard PRC-005-2 - Protection System Maintenance. While the feedback from the last round of comments is appreciated, we still cannot support the standard as written due to our concerns outlined here. We appreciate the work that NERC has put into a new standard to encapsulate and replace the current PRC-005, PRC-008, PRC-011 and PRC-017. But, we believe that the draft Standard needs one important revision before the NERC Board of Trustees should approve it. Specifically, NERC should revise the draft version of PRC-005-2 so that the beginning of Section 4.2 reads as follows: "4. 2. Facilities:Protection Systems that (1) are not facilities used in the local distribution of electricity, (2) are facilities and control systems necessary for operating an interconnected electric energy transmission network, and (3) are any of the following:"This revision is necessary to capture the limits that Congress placed on FERC, NERC, and the Regional Entities in developing and enforcing mandatory reliability standards. Specifically, Section 215(i) of the Federal Power Act provides that the Electric Reliability Organization (ERO) "shall have authority to develop and enforce compliance with reliability standards for only the Bulk-Power System." And, Section 215(a)(1) of the statute defines the term "Bulk-Power System" or "BPS" as: (A) facilities and control systems necessary for operating an interconnected electric energy transmission network (or any portion thereof); and (B) electric energy from generation facilities needed to maintain transmission system reliability. The term does not include facilities used in the local distribution of electric energy." With this language, Congress expressly limited FERC, NERC, and the Regional Entities' jurisdiction with regard to local distribution facilities as well as those facilities not necessary for operating a transmission network. Given that these facilities are statutorily excluded from the definition of the BPS, reliability standards may not be developed or enforced for facilities used in local distribution. In Order No. 672, FERC adopted the statutory definition of the BPS. In Order No. 743-A, issued earlier this year, the Commission acknowledged that "Congress has specifically exempted 'facilities used in the local distribution of electric energy'" from the BPS definition. FERC also held that to the extent any facility is a facility used in the local distribution of electric energy, it is exempted from the requirements of Section 215. In Order No. 743-A, FERC delegated to NERC the task of proposing for FERC approval criteria and a process to identify the facilities used in local distribution that will be excluded from NERC and FERC regulation. The critical first step in this process is for NERC to propose criteria for approval by FERC to determine which facilities are used in local distribution, and are therefore not BPS facilities. The criteria to be developed by NERC must exclude any facilities that are used in the local distribution of electric energy, because all such facilities are beyond the scope of the statutory definition of the BPS, which establishes the limit of FERC and NERC jurisdiction. Accordingly, it is critical that NERC draft the new PRC-005-2 standard to expressly exclude facilities used in local distribution. NERC must also expressly exclude from PRC-005-2 those facilities "not necessary for operating an interconnected electric energy transmission network (or any portion thereof)". Similar to the local distribution exclusion, the facilities not necessary for operating a transmission network are not part of the BPS and therefore must be expressly excluded from the standard. We understand, but disagree with, the argument that, because the FPA clearly excludes local distribution facilities and facilities necessary for operating an interconnected electric transmission network from FERC, NERC, and Regional Entity jurisdiction, it is not necessary to expressly exclude these facilities again in reliability standards. This approach might be legally accurate, but could lead to significant confusion for entities attempting to implement the new PRC-005-2 standard. There are numerous examples of Regional Entities, particularly WECC, attempting to assert jurisdiction over such facilities, and regulated entities face significant uncertainty as to which facilities they should consider as within jurisdiction. Clarifying FERC, NERC, and Regional Entity jurisdiction in the BES definition, even if such clarification is already provided in the FPA, would avoid such problems under the new PRC-005-2 standard. Again, we appreciate the work NERC has put in so far on a new Standard. We look forward to working within the drafting process to help implement our recommended revision.

Response: Thank you for your comment.

Other than the requirement relating expressly to UFLS/UVLS Protection Systems, the Applicability currently expressly addresses Protection Systems applied for the purpose of detecting BES faults.

To the degree that such Protection Systems may be located on non-BES components, and as the Applicability addresses UFLS/UVLS systems, the SDT has received the following position from NERC Legal:

While UFLS and UVLS equipment are located on the distribution network, their job is to protect the Bulk Electric System. This is not beyond the scope of NERC's 215 authority.

FPA section 215(a) definitions section defines "bulk-power system as (A) facilities and control systems necessary for operating an interconnected electric energy transmission network (or any portion thereof)." That definition then is limited by a later statement which adds the term bulk-power system "does not include facilities used in the local distribution of electric energy." Also, section 215 covers users, owners, and operators of bulk-power facilities.

UFLS and UVLS (when the UVLS is installed to prevent system voltage collapse or voltage instability for BES reliability) are not "used in the local distribution of electric energy" despite their location on local distribution networks. Further, if UFLS/UVLS facilities were not covered by the Reliability Standards, then in order to protect the integrity of the BES during under-frequency or under-voltage events, that load would have to be shed at the transmission bus to ensure the load-generation balance and voltage stability is maintained on the BES.

Bonneville Power Administration		1. BPA understands that the VSLs for R3 are based on the percentage of unresolved maintenance issues that an entity has failed to initiate a resolution for. This approach penalizes an entity for having less unresolved maintenance issues. For example, if an entity has only one unresolved maintenance issue and it failed to initiate a resolution for it, it would have failed to initiate a resolution for 100% of its unresolved maintenance issues, which would be a severe VSL. If another entity had 100 unresolved maintenance issues, and it failed to initiate resolution on ten of them, it would have failed to initiate a resolution on 10% of its unresolved maintenance issues, which would be a high VSL. Most likely, the first entity is doing a better job with its maintenance than the second entity, but the first entity receives a more severe penalty. The VSL for R3 is not an accurate measurement of a maintenance program's effectiveness and needs to be revised. BPA recommends removing the entire "Unresolved Maintenance Issue" topic from the standard. 2. In Table 1-1, it is not clear when a microprocessor relay meets the requirement for internal self-diagnosis and alarming. It is not clear that any microprocessor relay with a relay failure alarm would meet this requirement. 3. BPA believes that it seems like an omission in Table 1-1 for unmonitored microprocessor relays, the verification of settings is not included as a maintenance activity. 4. BPA would also like to recommend clarifying language stating that the owner of the asset is the responsible entity.

Response: Thank you for your comments. **1. The SDT believes that, if a component cannot be returned to "good working order" during the performance of the maintenance program as defined within the entity's criteria, the maintenance program must include those actions necessary to restore the component (and thus the Protection System) to good working order. Therefore, the topic of "Unresolved Maintenance Issues" cannot be removed from the standard. The VSL for the old Requirement R3 (now Requirement R5) has been revised to indicate gradations on the actual count of violations of this requirement, rather than percentages.** **2. Microprocessor relay failure alarms meet this requirement as long as the alarm is sent back to a location where corrective action can be initiated.** **3. The first maintenance activity listed on Table 1-1 is to validate that relay settings are as specified and this statement is applicable to unmonitored microprocessor relays. The activity has been revised to clarify.** **4. The preface paragraphs for R1, R2, R3, R4, and R5 each state that the Transmission Owner, Generator Owner, and Distribution Provider are responsible for implementation of the associated requirements.**		
FirstEnergy		1. We remain concerned with the proposed draft version of Requirement R3 as well as the SDT developed statements in the Supplementary Reference & FAQ. The SDT's approach sends industry the wrong message; a message that entities should not go beyond what is in the text of the standards and that in some cases they can even be found non-compliant by failing to meet their own more stringent internal practice. We have sent NERC Staff and Drafting Team leaders a separate document detailing our concerns as well as proposed redlines to the standard. The separately provided document can be viewed as FE's ballot comments.

		2. FE supports the standard from a technical standpoint but offer the following additional comments and suggestions: A clarification to the supplementary reference document is necessary regarding Maintenance Activities specified for electromechanical lockout and/or tripping auxiliary devices, as specified in Table 1-5 of the standard. The standard states, “Verify electrical operation of electromechanical trip and auxiliary tripping devices” which must be performed every 6 years. A question was asked during the September 15th Webinar requesting clarification of what “verify electrical operation....” meant. The verbal response from the SDT member was that this involves verifying that the relay actuates, but does not require verification that its contacts changed state. However, the answer to the question at the bottom of page 29 and top of page 30 in the Supplementary Reference and FAQ (dated July 29, 2011) implies that checking the contacts is necessary. The following statement in the published answer makes this clarification request necessary; “Auxiliary outputs not in a trip path (i.e. annunciation or DME input) are not required, by this Standard, to be checked.” This statement implies that if outputs to annunciators and DME inputs do not need to be checked, then the other outputs do need to be checked. Verification of the auxiliary tripping relays appears to be covered in Table 1-5 of the standard under the "Unmonitored control circuitry associated with protective functions" section at 12 calendar years. Thus, we ask the SDT clarify in the supplementary reference the type of maintenance activities required for electromechanical lockout and/or tripping auxiliary devices to satisfy the requirements of Table 1-5 of the standard. Since the standard specifically dictates the output contacts verification for protective relays under Table 1-1, the output contacts of aux tripping relays is left up to interpretation. Therefore, we suggest the following statement be added after “Auxiliary outputs not in a trip path (i.e. annunciation or DME input) are not required, by this Standard, to be checked.” on page 30 of the document: “Auxiliary outputs that are in the trip path shall be maintained as detailed in Table 1-5 of the standard under the ‘Unmonitored control circuitry associated with protective functions" section’ at 12 calendar years.”

Response: Thank you for your comments. **1. The standard and the Supplementary Reference and FAQ document have been changed to address your concerns. Specifically, Requirement R1 part 1.3 has been removed; Requirement R3 has been revised so that, for time-based programs, entities shall comply with the tables; Requirement R4 has been added to address performance-based maintenance, and Requirement R5 has been added to address Unresolved Maintenance Issues.** **2. Output contacts and auxiliary tripping relays that are not part of a trip path or essential for proper operation of an SPS need not be tested per this standard. The Supplementary Reference and FAQ document will be revised as you suggest.**		
Southwest Power Pool Standards Review Group		1. Please update Appendix B, Drafting Team Members, of the Supplementary Reference document. 2. We request that the detail for the breaker failure protection for generator protection in the bulleted list at the bottom of page 31 and the top of page 32 of the Supplementary Reference document be removed. We are not sure what the SDT is looking for here since there are several types of breaker failure protection. 3. We ask that Section 4.2.5.4 of the draft standard under the Facilities be modified to read 'Protection Systems that trip the generator for generator-connected station service transformers for generators that are part of the BES.' 4. We suggest that Section 1.3 Data Retention be rewritten to provide clarification that no data prior to the date of the last audit need be retained.

Response: Thank you for your comments. **1. The list of SDT members has been updated.** **2. The preface to the list of relays to which you refer is as follows: "Examples of typical devices and systems that may directly trip the generator, or trip through a lockout relay may include but are not necessarily limited to:". The SDT was merely attempting to provide a list of possible relays that might need to be included. The list is not meant to be all inclusive nor do all relays of the types on the list necessarily need to be included.** **3. In consideration of your comment and those of others received, the SDT has revised Section 4.2.5.4 as requested.** **4. In order that a Compliance Monitor can be assured of compliance, the SDT believes that the Compliance Monitor will need the data of the most recent performance of the maintenance, as well as the data of the preceding one to validate that entities have been in compliance since the last audit (or currently, since the beginning of mandatory compliance). The SDT has specified the data retention in the posted standard to establish this level of documentation. This seems to be consistent with the current practices of several Regional Entities.**		
Florida Municipal Power Agency		The "Applicability" section is not consistent with the recent Y-W and Tri-State PRC-005 interpretation (Project 2009-17). The Applicability 4.2.1 states that the standard includes: "Protection Systems that are installed for the purpose of detecting faults on BES Elements (lines, buses, transformers, etc.)" whereas the Y-W and Tri-State interpretation basically says that "transmission Protection Systems" both detect AND trip BES Elements; Hence, the new standard alters the existing "and" statement in the Y-W and tri-State interpretation and eliminates the consideration of tripping BES Elements from applicability. This will have the consequence of including Protection Systems on step-down transformers that "look backwards" into the BES system as applicable to the standard. For instance, a distribution network fed from multiple transmission interconnections will have protective relaying (directional overcurrent most likely) to look backwards into the transmission system to trip the step-down transformer to prevent back-feed from the distribution network). This step-down transformer protection would be included in the new standard because it's purpose to the detect faults on the BES (event though the purpose of the protection is actually to protect overloading of the distribution and for worker safety on the BES); whereas the Y-W and Tri-State interpretation excludes that protection from the existing PRC-005-1 standard.

Response: Thank you for your comment. **The SDT believes that the Applicability as stated in PRC-005-2 is correct and that it supports the reliability of the BES. The SDT observes that the approved Interpretation addresses the term, "transmission Protection System", and notes that this term is not used within PRC-005-2; thus the interpretation does not apply to PRC-005-2. PRC-005-2 specifically addresses "Protection Systems that are installed for the purpose of detecting faults on BES Elements." Please see Section 2.3 of the Supplementary Reference and FAQ document for additional discussion.**		
Pepco Holdings Inc & Affiliates		Requirement 3 and the Supplementary Reference Document indicate that an entity should be held to its internal PSMP (especially for a time based program) even if the plan is more stringent than the NERC standard. This would be a deterrent for initiative and for excellence and punish utilities for going above the standards and performing best practices. It also tends to drive the industry to lowest common denominator practices. R3 and the accompanying Supplementary Reference Document should be appropriately revised to reflect that entities would only be held auditably accountable for the minimum requirements as stated in the standard and associated documents.
Response: Thank you for your comments. The standard and the Supplementary Reference and FAQ document have been changed to address your concerns. Specifically, Requirement R1 part 1.3 has been removed; Requirement R3 has been revised so that, for time-based programs, entities shall comply with the tables; Requirement R4 has been added to address performance-based maintenance, and Requirement R5 has been added to address Unresolved Maintenance Issues.		
MRO's NERC Standards Review Forum		a. Section 4.2.5.4 includes station service transformers for generator facilities. As currently written, the section includes all the protection systems for station service transformers for generators that are a part of the BES. It states, "Protection Systems for generator-connected station service transformers for generators that are part of the BES." Generating facilities may have transfer schemes on the auxiliary transformer to transfer equipment to a reserve transformer instead of tripping the unit. These protection systems should not be included in the Facilities for PRC-005-2, since the BES is not affected. Recommend changing Section 4.2.5.4 to read, "Protection Systems that trip the generator for generator-connected station service transformers for generators that are a part of the BES."

		b. Data Retention, Section 1.3 (concerning R2 and R3) requires an entity to retain the two most recent performances of each distinct maintenance activity. This is an unreasonable requirement and does not enhance reliability. Recommend the data retention be changed to require only the most recent (past) test record. An example exists where an entity recently registered and tested all their relays prior to registering. They have one set of documentation and not two. PRC-005-2 allows testing intervals of up to 12 calendar years. If we are required to have the two most recent tests, we could conceivably have to retain a relay test record for 24 years. Recommend retention to be the most current record or all records since the last audit.
		c. Table 1-5 requires a maintenance activity to, "Verify that each trip coil is able to operate the circuit breaker, interrupting device, or mitigating device." Recommend this be changed to, "Verify that each a trip coil is able to operate the circuit breaker, interrupting device, or mitigating device." Or alternately, change the wording to, "Electrically operate each interrupting device every 6 years." While requiring each trip coil to operate the breaker sounds good in theory, practically it creates issues in the field and may create more problems than it solves. The trip coils are located in the panel at the breaker and aren't configured to test independently. Isolating one trip coil from the other may include "lifting a wire" that may not get landed properly when the test is complete. Then, how do you prove for a compliance audit that both trip coils were independently tested to trip the breaker? Using an actual event only tests one coil and we may not know which coil tripped the device. To be compliant, it isn't practical to be able to track a real-time fault clearing operation as suggested on page 67 of the Supplementary Reference document. First, we don't know which trip coil operated, then we have a "one off" device in the substation that must be tracked separately with a different testing cycle from the other devices in the substation. The standard should focus on ensuring the control circuitry is intact and trips the breaker without injecting additional, unneeded risk to the BES.

		d. General comment under Table 1-5: We do extensive testing of the control circuit during commissioning and after a modification to the circuit. Testing of the control circuitry on a periodic basis is not needed. The wear and tear on the equipment from functional testing and the potential risk of the testing itself may create more issues than the benefits received from doing the tests. The functional test injects significant opportunities for human performance errors during the test (technician trips the wrong device, differential relay opens all protective devices for a bus instead of a breaker, technician bumps another relay, screw driver falls into another device, etc.) and latent errors after the test (i.e., if a wire was lifted during the test, was it landed back in proper location, was the relay tripping function activated after the test was completed or was the relay left in test mode, etc.). Request the drafting team provide a basis for requiring the functional test. Are there documented instances where the control circuitry caused a significant event on the BES? Many utilities, monitor circuit breakers for operations. If a breaker hasn't operated for a defined period of time, we set up a maintenance activity to operate the breaker (possibly to include a timing test to ensure the breaker clears in the proper amount of cycles) - this ensures the operating linkages aren't bound and the breaker will operate. Misoperations are already monitored and reported through PRC-004. Does recent misoperation data or TADS data indicate that control circuitry/trip coils are a problem within the protection and control system? The current version of PRC-005 doesn't require functional tests. What is the basis for requiring additional compliance documentation (additional functional testing)? A possible alternative: only perform testing following modifications or major maintenance (like breaker change outs or panel modifications).
		e. Change the text of "Standard PRC-005-2 - Protection System Maintenance" Table 1-5 on page 19, Row 3, Column 2 to: "12 calendar years". 1) The maximum maintenance interval for "Electromechanical lockout and/or tripping devices which are directly in a trip path from the protective relay to the interrupting device trip coil" should be consistent with the "Unmonitored control circuit" interval which is 12 calendar years.2) In order to test the lockout relays, it may be necessary to take a bus outage (due to lack of redundancy and associated stability issues with delayed clearing). Increasing the frequency of bus outages (with associated lines or transformers) will also increase the amount of time that the BES is in a less intact system configuration. Increasing the time the BES is in a less intact system configuration also increases the probability of a low frequency, high impact event occurring. Therefore, the Maximum Maintenance Interval should be 12 years for lockout relays.

		f. In the background section of the implementation plan in item two it states "..it is unrealistic for those entities to be immediately in compliance with the new intervals." A recent compliance application notice (CAN-0012) indicated that auditors are requiring entities to include proof of compliance to maintenance intervals by providing the most recent and prior maintenance dates. Please provide clarity on CAN-0012 is applicable to PRC-005-2?
		g. The purpose statement of the standard seems to be inconsistent with the applicability section. To correct this it is suggested that the words "affecting the reliability" be removed from the purpose statement
		h. For consistency with the changes from 3 months to 4 months in the tables of the standard it is suggested that the second item in Table 1-4(b) be changed from 6 calendar months to 7 calendar months
		i. In the tables for dc Supply the term "unit-to-unit" is used along with "intercell" when referring to measurement of connection resistance. From the applicable IEEE standards (e.g. IEEE 450) the standard terminology seems to be "intercell". It is recommended that the "unit-to-unit" term be removed to avoid confusion regarding what is to be verified.
		j. The NSRF would like to extend our thanks to the drafting team. The 96 page Supplementary Reference document allows us to discuss these issues before the standard is approved, instead of as a potential violation later. Excellent job!

Response: Thank you for your comments.

a) **The SDT has modified paragraph 4.2.5.4 as you suggest.**

b) **In order that a Compliance Monitor can be assured of compliance, the SDT believes that the Compliance Monitor will need the data of the most recent performance of the maintenance, as well as the data of the preceding one to validate that entities have been in compliance since the last audit (or currently, since the beginning of mandatory compliance). The SDT has specified the data retention in the posted standard to establish this level of documentation. This seems to be consistent with the current practices of several Regional Entities.**

c) **The description of the configuration of the second trip coil on circuit breakers you have provided is not typical of the redundant approach taken by most entities. Typically, second trip coils are electrically isolated from the first trip coil and are often fed by a separately fused dc control circuit with different relay trip output, lockout and auxiliary tripping contacts utilized in each circuit. The SDT believes that it is important that redundant trip paths be maintained within the indicated interval, and the prescribed interval already considers the reliability benefits of redundant equipment.**

d) **The SDT believes that it is possible to manage the risks that you describe and that performance of these trip path verifications will be an overall benefit to the reliability of the BES.**

e) **The SDT believes that electromechanical lockout relays need periodic operation. As such, these devices are required to be exercised at the same 6 year interval required for electromechanical relays. The SDT recognizes the risk of human error trips when working with testing of lockout devices but believes these risks can be managed. Performance-based maintenance is an option if you want to extend your intervals beyond 6 years. The SDT, however, has modified Table 1-5 to remove other auxiliary relays, etc, from this activity, and clarified that the verification of such.**

f) **The CAN cited applies to PRC-005-1, not PRC-005-2. The SDT intends that the Implementation plan associated with PRC-005-2 will govern compliance to PRC-005-2 during the transition to the new standard.**

g) **The purpose of the standard expresses the general intent of the standard, and is further clarified by the Applicability.**

h) **The SDT believes that the 6-month interval is appropriate for these activities.**

i) **The term "unit-to-unit" is used for the conductor utilized to connect one multi-celled battery jar to an adjacent multi-celled battery jar. The SDT does not believe this terminology causes wide spread confusion.**

j) **Thank you.**

Arizona Public Service Company		While we are supportive of the changes the SDT has made, APS is concerned the draft Standard will not give entities the flexibility to continue to improve reliability based on changing industry norms and best practices. In addition, when technology changes for the better, industry will need the flexibility to optimize use of the new technology. Lastly, the more often protection equipment is taken out of service for testing, the more often the line is vulnerable. The balance between the correct amount of testing and correct amount of time the equipment is in the field and in service is an important consideration when assuring the reliability of the BES. APS suggests the general principles of the following two papers be applied to more equipment types than microprocessor relays with self test capabilities. 1) 'An Improved Model for Protective-System Reliability,' P.M. Anderson and S.K. Agrawal, Power Math Associates, Inc., IEEE Transactions on Reliability, Volume 41, No. 3, September 1992;2) 'Philosophies for Testing Protective Relays,' J.J. Kumm, et. al., Schweitzer Engineering Laboratory, Inc., 48th Annual Georgia Tech Protective Relaying Conference, May 1994.
Response: Thank you for your comments. FERC Order 693 and the approved SAR assign the SDT to develop a standard with maximum allowable intervals and minimum maintenance activities. Wherever possible, the SDT has provided entities with the flexibility to utilize capabilities of emerging technologies by using condition-based maintenance where effective, and also by using performance-based maintenance should an entity wish to modify their intervals based on past performance.		
Southern Company Generation		1) For Table 1-1 and Table 3, consider adding "(internal to the relay)" to the microprocessor relay 6 calendar year maintenance activities to clarify that these maintenance activities are not related to items external to the relay).
Response: Thank you for your comments. Since the component type being addressed is the protective relay itself, it seems that the clarification you request is unnecessary.		

Tacoma Power		1. The implementation plan for R2 and R3 is unclear on whether each maintenance activity has its own implementation schedule. The implementation plan can also be interpreted to mean that the implementation schedule for a given protection system component is driven by the smallest maximum maintenance (allowable) interval. For example, for unmonitored communications systems, it is unclear whether all maintenance activities indicated in Table 1-2, including those corresponding to 6 calendar years, must be completed on all unmonitored communications systems by the first calendar quarter 15 months following applicable regulatory approval, or if this timeline only applies to the maintenance activity specified in Table 1-2 corresponding to a maximum maintenance interval of 4 calendar months.
		2. Assuming that there is a different implementation schedule for different maintenance activities for some protection system component types (namely station DC supply and communication systems), the middle bullet on page 1 of the implementation plan does not seem to consider that it may not be possible to identify whether some protection system components are completely being addressed by PRC-005-2 or the Program developed for the previous standards. In other words, during implementation, some maintenance activities for the same protection system component may be addressed by PRC-005-2, while other maintenance activities may be addressed by the Program developed for the previous standards.
		3. It is unclear whether control circuitry (trip paths) from protective relays that respond to mechanical quantities is included. This issue is addressed in the supplementary reference but is vague in the draft standard itself.
		4. This draft of PRC-005-2 requires the Protection System Maintenance Program (PSMP) to “include all applicable monitoring attributes and related maintenance activities” per the Tables and requires an entity to “implement and follow its PSMP.” Under the draft standard, it is unclear whether an entity has to document in the PSMP and/or maintenance records how they accomplish(ed) the maintenance activities or simply to indicate that the maintenance activities are included and have been completed within the defined intervals. It is clear that entities are afforded some latitude in how they conduct the required maintenance activities. However, the level of detail required to document (1) how an entity chooses to perform the maintenance activities and (2) that applicable maintenance activities have been completed is not clear.

		5. In Table 1-2, there is a maintenance activity related to communication systems to “verify essential signals to and from other Protection System components.” It is unclear if this statement is referring to control circuitry associated with the communication system end devices, end device input and output operation (as in Table 1-1 for protective relays), or something else. It is recommended that the requirement be to “verify operation of communication system inputs and outputs that are essential to proper functioning of the Protection System.” This language is consistent with that used for protective relays in Table 1-1.
		6. Referring to Table 1-2, it is unclear whether an entity has the sole authority decide which ‘performance criteria’ are ‘pertinent.’ Additionally, it is unclear if an entity must document the ‘communications technology applied’ and the associated ‘performance criteria’ in its PSMP.
		7. In Table 1-4, it is unclear if there is a distinction between the terms ‘resistance’ and ‘ohmic values.’ If there is a distinction, then this distinction should be clarified.
		8. In Table 1-4, it is unclear if there is a distinction between the terms ‘battery terminal connection resistance’ and ‘unit-to-unit connection resistance.’ If there is a distinction, then this distinction should be clarified.
		9. In Table 1-4, replace the term ‘resistance’ with ‘impedance.’
		10. Recommend that the 6 calendar month interval in Table 1-4(b) be lengthened to 18 calendar months to be more consistent with similar maintenance activities for other battery types. At minimum, lengthen the interval to at least 7 calendar months in a similar way that 3 calendar months was lengthened to 4 calendar months for other maintenance activities.

		11. Referring to Table 1-5, no periodic maintenance is required for "control circuitry whose continuity and energization or ability to operate are monitored and alarmed." It is unclear whether or not it is acceptable to verify DC voltage at the actuating device trip terminals at least once every 12 calendar years for "unmonitored control circuitry associated with protective functions." It is recommended that periodically verifying DC voltage in this manner be an acceptable means of accomplishing the maintenance activity identified in Table 1-5 for unmonitored control circuitry associated with protective functions.
		12. Referring to 4.2. Facilities of the draft standard, it is unclear whether protection systems for transformers that step down from over 100kV to below 15kV are applicable to the standard. Even if there are normally-open distribution feeder ties for purposes of transferring load in a make-before-break fashion, these transformers are generally not considered BES elements.
		13. Referring to 4.2.5 of the draft standard, it is unclear whether protection for generator excitation systems are applicable to the standard.
		14. It is unclear whether external timing relays (e.g., Zone 2) are considered control circuitry components (like lockout and auxiliary relays) or protective relay components.
Response:	**Thank you for your comments.**	
	1. The SDT agrees with your observation and has changed the relevant parts of the Implementation plan to clarify that they apply to the maintenance activities for the relevant maintenance intervals.	
	2. The SDT agrees with your observation and revised the Implementation plan to clarify.	

	3. The trip paths from protective relays that respond to mechanical quantities and are intended to detect faults are a part of the Protection System control circuitry. The sensing elements are omitted from PRC-005-2 testing requirements because the SDT is unaware of industry recognized testing protocols for these sensing elements. The SDT believes that Protection Systems that trip (or can trip) the BES should be included. This position is consistent with the currently-approved PRC-005-1, consistent with the SAR for Project 2007-17, and the SDT understands this to be consistent with the position of FERC staff. Note that trip signals from devices sensing mechanical parameters not directly indicative of an electrical fault need not be tested per this standard.
	4. The SDT has removed parts 1.1 and 1.3 from Requirement R1, addressing part of your comment. The SDT agrees that PRC-005-2 allows some leeway in how an entity fulfills the testing requirements of the standard. Section 15 of the Supplementary Reference and FAQ document provides numerous examples of possible testing techniques for the various component types making up a Protection System. An entity's PSMP should clearly define how the testing requirements of the standard are fulfilled. The Measures for each requirement, as well as Section 15.8 of the Supplementary Reference and FAQ document, provide some examples of possible compliance documentation for completion of testing.
	5. The SDT agrees with your suggestion and has changed the standard accordingly.
	6. The entity has the authority to establish its own acceptable performance criteria. This criteria does not need to be in the PSMP, but should reside somewhere within the maintenance documentation.
	7. As utilized on Table 1-4, the term "ohmic value" is a generic reference to the measurement of a battery cell or units ability to pass current flow. This may be done using conductance, resistance or impedance measurements; the various battery test equipment manufacturers use different measurement methods and the term "ohmic value" is meant to be technology neutral. See FAQ on page 78 of the Supplementary Reference and FAQ document. The term "resistance" as used in Table 1-4 refers specifically to the dc resistance of the battery terminal connections and the battery intercell/inter-unit physical connectors. See related FAQ on pages 74-75 of the Supplementary Reference and FAQ document.

	8. Battery terminal connection resistance is a measurement of the resistance of a connection at a battery terminal. Battery intercell or unit-to-unit connection resistance is a measurement of the resistance of the external conductor interconnecting two adjacent battery cells or two adjacent multi-cell battery units. The SDT believes these are common battery maintenance terms used throughout the industry.
	9. The SDT disagrees and believes that resistance as used in Table 1-4 is the appropriate term for the parameters to be measured and is consistent with standard battery system maintenance terminology.
	10. The SDT disagrees with your recommendation to standardize maintenance intervals between different battery types that have distinctly different failure mechanisms. See related FAQ on pages 80-81 of the Supplementary Reference and FAQ document for further discussion of requirements for ohmic measurements of VRLA batteries. Concerning your recommendation to allow for 7 calendar months, the SDT believes that the six-month interval specified is appropriate.
	11. The SDT has modified this specific portion of the Table, and believes that the modifications address your concern. Please see Section 15.3 of the Supplementary Reference and FAQ document for a discussion of this topic.
	12. The standard does not include the Protection Systems for transformers that step down from over 100kV to below 15kV if these transformers are not BES elements. If Protection Systems are installed for purposes of detecting Faults on BES elements, these Protection Systems are included.
	13. Paragraph 4.2.5.1 indicates that the excitation system protection system would only be in scope if the excitation system generates signals that trip the generator output breaker either directly or via lockout or auxiliary tripping relays.
	14. As timing is critical to proper Protection System function, timers are considered protective relays.

Progress Energy		1. Standard, Table 1-4(a), second sentence under Component Attributes, should state "Protection System Station dc supply for non-BES interrupting devices for SPS or non-distributed UFLS and UVLS systems are excluded...." As written, the statement does not include the phrase "UFLS and." I believe it should. 2. Supplemental, Section 13, 2nd paragraph, first sentence should state: "...device match the minimum requirements listed in Tables 1 and 3."
Response: Thank you for your comments. **1. The SDT agrees. Table 1-4(a) has been modified as you suggest; this text has been relocated to the header of the table.** **2. The SDT agrees and has modified the Supplementary Reference and FAQ document as you suggest.**		

Western Area Power Administration		Comment 1:Western Area Power Administration does not agree with penalizing utilities for implementing maintenance programs that exceed the requirements defined in the NERC Standard PRC-005-2 maintenance tables. Although the intent of the language in the Supplementary Reference and FAQ document may have been to allow evolving maintenance programs to include condition-based and performance based maintenance in their programs, penalizing utilities with more stringent programs will more likely provide a disincentive for program development. Utilities will discontinue any additional maintenance activities that could put them at risk for non-compliance. This will cause maintenance programs to stagnate and new maintenance ideas to improve system reliability to not be implemented. It is the opinion of the Western Area Power Administration that the following text should be removed from the Supplementary Reference and FAQ document and entities should be audited to the minimum requirement of the standard regardless of their individual programs. Recommendation: Remove the following text from the Supplementary Reference & FAQ document:1. Page 26 - The bullet "If your PSMP (plan) requires more activities then you must perform and document to this higher standard." 2. Page 27 - The bullet "If your PSMP (plan) requires activities more often than the Tables maximum then you must perform and document those activities to your more stringent standard." 3. Page 27 - The paragraph "It has been noted here that an entity may have a PSMP that is more stringent than PRC-005-2. There may be any number of reasons that an entity chooses a more stringent plan than the minimums prescribed within PRC-005-2, most notable of which is an entity using performance based maintenance methodology. (Another reason for having a more stringent plan than is required could be a regional entity could have more stringent requirements.) Regardless of the rationale behind an entity's more stringent plan, it is incumbent upon them to perform the activities, and perform them at the stated intervals, of the entity's PSMP. A quality PSMP will help assure system reliability and adhering to any given PSMP should be the goal." Revise R3 of PRC-005-2 and add statement to the Supplementary Reference & FAQ document.1. R3: Each Transmission Owner, Generator Owner and Distribution Provider shall implement and follow its PSMP plan within the prescribed intervals of Tables 1, 2 and 3. and correct any unresolved maintenance issues.2. FAQ: Any utility maintaining Protection System equipment that exceeds the requirements and tables because of historical testing data and/or failure documentation should not be held non-compliant or penalized for not meeting its PSMP, as long as they do not exceed the maximum allowable intervals or meet the minimum maintenance activities of the standard.

		Comment 2:R3 of PRC-005-2 states "Each Transmission Owner, Generator Owner, and Distribution Provider shall implement and follow its PSMP and initiate resolution of any unresolved maintenance issues." The Western Area Power Administration would like more clarification on potential data request for requirement R3 of PRC-005-2. Because the requirement uses the term initiates resolution, the entity could make the assumption that providing just a list of maintenance request for unresolved maintenance issues will serve to prove compliance. Although it would seem implied that whatever method used to initiate resolution would lead to some type of corrective maintenance, the requirement does not make that absolutely clear. To ensure the maintenance practices are meeting the intent of the requirement, the requirement needs to clarify the expectations for completing corrective maintenance that was initiated to resolve maintenance issues. Recommendation: Add additional clarification to Supplementary Reference & FAQ document to further clarify expectation for this requirement.

Response: Thank you for your comments.

1. **The standard and the Supplementary Reference and FAQ document have been changed to address your concerns. Specifically, Requirement R1 part 1.3 has been removed; Requirement R3 has been revised so that, for time-based programs, entities shall comply with the tables; Requirement R4 has been added to address performance-based maintenance, and Requirement R5 has been added to address Unresolved Maintenance Issues.**
2. **Additional clarification has been added to the Supplementary Reference and FAQ document. Additional examples have also been added to the Measure for this Requirement.**

PacifiCorp		1. The data retention requirement for producing evidence that the entity performed maintenance for the 2 most recent maintenance intervals is excessive. As an example, if a registered entity's maintenance/test interval is 12 years, such entity may be required to keep records for up to 35 years. PacifiCorp recommends a revision to the data retention requirement to provide for either a maximum retention period of 10 years or, in cases in which the interval exceeds 10 years, the most recent maintenance/test cycle only. 2. The requirement to identify all PTs is very onerous and not needed to verify maintenance compliance and therefore serves a limited reliability benefit. PacifiCorp believes that, as long as a registered entity can demonstrate that it can verify that all CTs/PTs providing input into a Protection System have been tested and maintained according to its established procedures, then a separate and independent requirement to maintain a list of these devices is not necessary. As an example, if an entity performed their protection system maintenance on a "scheme" basis, and as part of that maintenance documentation identified all CT's and PT's providing input into the scheme and verified their accuracy, then having a "master list" would provide no benefit. A list of all CT's associated with one device such as a circuit breaker would have little value in this case as these CT's may provide input into multiple relay schemes and would not be maintained on an individual circuit breaker basis.

Response: Thank you for your comments.

1. **In order that a Compliance Monitor can be assured of compliance, the SDT believes that the Compliance Monitor will need the data of the most recent performance of the maintenance, as well as the data of the preceding one to validate that entities have been in compliance since the last audit (or currently, since the beginning of mandatory compliance). The SDT has specified the data retention in the posted standard to establish this level of documentation. This seems to be consistent with the current practices of several Regional Entities.**
2. **The SDT does not believe the current standard contains a "separate and independent requirement to maintain a list of these devices". As your comment correctly indicates, if an entity can provide evidence that the inputs from all CTs and PTs are accurately being received by the associated relays for in scope Protection Systems, this is acceptable. It is up to the entity to best determine how to track this – whether by a "master list" of CTs and/or PTs, on a "scheme" basis, by physical location of the instrument transformer, or some other effective tracking method.**

Saft America, Inc.		Saft Comments on NERC Standard PRC-005-2 - Protection System Maintenance - Please find herein Saft's comments to NERC PRC-005-2 regarding ohmic testing of Nickel-Cadmium (NiCad) batteries. As drafted, the proposed NERC Standard PRC-005-2 will lead to the removal of high quality, reliable NiCad battery power units from Protection Systems, which is counter to the NERC stated purpose of PRC-005-2, which is to 'document and implement programs for the maintenance of all Protection Systems affecting the reliability of the Bulk Electric System (BES) so that these Protection Systems are kept in working order.' There is broad consensus within the battery industry that ohmic testing of Valve Regulated Lead-Acid (VRLA) batteries provides a means for trending the condition of the battery over time. Such a consensus does not exist for Vented Lead-Acid (VLA) batteries, because ohmic measurements are more difficult to trend, thereby providing a go/no-go assessment of the battery's availability at that precise moment in time, rather than a measure of VLA battery condition. Ohmic testing of NiCad batteries provides a similar go/no-go assessment to ohmic testing of VLA batteries. As with VLA batteries, ohmic testing of NiCad batteries does not provide meaningful trending information, but rather provides a status update of battery condition at a specific moment in time. Due to the similar information provided by ohmic testing of VLA and NiCad batteries, Saft recommends that ohmic testing of NiCad batteries be included under the Maintenance Activities for NiCad batteries. Specifically, Saft recommends that NERC add the following language to the Maintenance Activities column in Table 1-4(d), 'Verify that the station battery can perform as designed by evaluating the measured cell/unit internal ohmic values to station battery baseline', at a maximum maintenance interval of 18 months, as in the requirement for VLA batteries noted in Table 1-4(a).

Response: Thank you for your comments.

The SDT disagrees. The SDT is aware of studies that indicate a correlation between ohmic measurements and battery condition (or remaining life) for VLA and VRLA batteries when trended against a baseline ohmic measurement taken when the battery was new. These same studies concluded no such correlation exists for NiCad batteries. We are unaware of any published studies that conclude otherwise for NiCad batteries. The standard does not favor one technology over another but simply allows flexibility in testing techniques when the attributes of a technology allow for technically justifiable application of that flexibility and achieve the objective of the standard.

Nebraska Public Power District		a. Section 4.2.5.4 includes station service transformers for generator facilities. As currently written, the section includes all the protection systems for station service transformers for generators that are a part of the BES. It states, "Protection Systems for generator-connected station service transformers for generators that are part of the BES." Generating facilities may have transfer schemes on the auxiliary transformer to transfer equipment to a reserve transformer instead of tripping the unit. These protection systems should not be included in the Facilities for PRC-005-2, since the BES is not affected. Recommend changing Section 4.2.5.4 to read, "Protection Systems that trip the generator for generator-connected station service transformers for generators that are a part of the BES."
		b. Section 1.3 requires an entity to retain the two most recent performances of each distinct maintenance activity. This is an unreasonable requirement and does not enhance reliability. Recommend the data retention be changed to require only the most recent test record. An audit should be focused on the present day and not in the past. Is an entity compliant today and not can we find a way to issue a fine for something in the past? An example exists where an entity recently registered and tested all their relays prior to registering. They have one set of documentation and not two. Why should they be forced into testing again and incurring additional expense for customers only to have two tests available for an auditor? This does not enhance reliability. PRC-005-2 allows testing intervals of up to 12 calendar years. If we are required to have the two most recent tests, we could conceivably have to retain a relay test record for 24 years! Hypothetically, if we have a test record from ten years ago, but we don't have the record from 24 years ago, how does that adversely affect the reliability of the BES today? The standard should focus on - Are we compliant today?

		c. Table 1-5 requires a maintenance activity to, “Verify that each trip coil is able to operate the circuit breaker, interrupting device, or mitigating device.” Recommend this be changed to, “Verify that a trip coil is able to operate the circuit breaker, interrupting device, or mitigating device.” Or alternately, change the wording to, “Electrically operate each interrupting device every 6 years.” While requiring each trip coil to operate the breaker sounds good in theory, practically it creates issues in the field and may create more problems than it solves. The trip coils are located in the panel at the breaker and aren’t configured to test independently. Isolating one trip coil from the other may include “lifting a wire” that may not get landed properly when the test is complete. Then, how do you prove for a compliance audit that both trip coils were independently tested to trip the breaker? Using an actual event only tests one coil and we may not know which coil tripped the device. To be compliant, it isn’t practical to be able to track a real-time fault clearing operation as suggested on page 67 of the Supplementary Reference document. First, we don’t know which trip coil operated, then we have a “one off” device in the substation that must be tracked separately with a different testing cycle from the other devices in the substation - this is a recipe for a compliance violation. The standard should focus on ensuring the control circuitry is intact and trips the breaker without injecting additional, unneeded risk to the BES.

		d. General comment under Table 1-5: We do extensive testing of the control circuit during commissioning and after a modification to the circuit. Testing of the control circuitry on a periodic basis is not needed. The wear and tear on the equipment from functional testing and the potential risk of the testing itself may create more issues than the benefits received from doing the tests. The functional test injects significant opportunities for human performance errors during the test (technician trips the wrong device, differential relay opens all protective devices for a bus instead of a breaker, technician bumps another relay, screw driver falls into another device, etc.) and latent errors after the test (i.e., if a wire was lifted during the test, was it landed back in proper location, was the relay tripping function activated after the test was completed or was the relay left in test mode, etc.). Request the drafting team provide a basis for requiring the functional test. Are there documented instances where the control circuitry caused a significant event on the BES? Many utilities, including us, monitor our circuit breakers for operations. If a breaker hasn't operated for a defined period of time, we set up a maintenance activity to operate the breaker (possibly to include a timing test to ensure the breaker clears in the proper amount of cycles) - this ensures the operating linkages aren't bound and the breaker will operate. We have many maintenance activities performed on devices for the BES that do not require a NERC standard. If a utility chooses not to perform best practice maintenance, customers will experience more frequent and longer outages. The utility will receive customer feedback on outages which should translate into the utility increasing its maintenance. In other words, we don't have to include a functional test as a NERC requirement. Misoperations are already monitored and reported through PRC-004. Does recent misoperation data or TADS data indicate that control circuitry/trip coils are a problem within the protection and control system? The current version of PRC-005 doesn't require functional tests. What is the basis for requiring additional compliance documentation (additional functional testing)? A possible alternative: only perform testing following modifications or major maintenance (like breaker change outs or panel modifications).

		e. Recommend NERC provide training specifically on how to audit PRC-005-2 to auditors in all eight Regional Entities. PRC-005 is the most violated standard since enforcement began on June 18, 2007. This is an excellent opportunity for NERC to get all eight regions on the same page for what to audit. NERC provides training on standard auditing guidelines and sample selection, but doesn't provide training on how to audit specific standards. RSAW's and CAN's have been an attempt to get consistency across the regions, but differences are still obvious. NERC is in the perfect position to observe potential violations (PV) from an auditor and as a PV is written that goes beyond the standard or is not in accordance with the initial training; NERC can dismiss the PV and retrain the auditor. Auditors aren't perfect, nor are any of us. Training is a basic tool for the auditor to perform their job properly.
Response: Thank you for your comments **a) The SDT has modified paragraph 4.2.5.4 as you suggest.** **b) In order that a Compliance Monitor can be assured of compliance, the SDT believes that the Compliance Monitor will need the data of the most recent performance of the maintenance, as well as the data of the preceding one to validate that entities have been in compliance since the last audit (or currently, since the beginning of mandatory compliance). The SDT has specified the data retention in the posted standard to establish this level of documentation. This seems to be consistent with the current practices of several Regional Entities.** **c) The description of the configuration of the second trip coil on circuit breakers you have provided is not typical of the redundant approach taken by most entities. Typically, second trip coils are electrically isolated from the first trip coil and are often fed by a separately fused dc control circuit with different relay trip output, lockout and auxiliary tripping contacts utilized in each circuit. The SDT believes that it is important that redundant trip paths be maintained within the indicated interval, and the prescribed interval already considers the reliability benefits of redundant equipment.** **d) The SDT believes that it is possible to manage the risks that you describe and that performance of these trip path verifications will be an overall benefit to the reliability of the BES.** **e) The SDT will forward this comment to NERC Compliance for their consideration.**		
Exelon		
Texas		(1) General - defined terms need to be capitalized throughout this standard.

Reliability Entity		(2) Requirement R3 only addresses initiation of resolution to any Unresolved Maintenance Issues. Requirement R3 should require completion of corrective action to deal with Unresolved Maintenance Issues within a reasonable timeframe.
		(3) Section 1.3, Data Retention, should require each entity to keep all versions of its PSMP that were in effect since its last compliance audit, in order to demonstrate compliance at all relevant times (not just the current version).
		(4) In the Severe VSL for R2, add “Annually” to the second bullet under part 5.
		5) The VSLs for R3 should contain a time frame (annual?). The second part of these VSLs should refer to initiation and completion of resolution of Unresolved Maintenance Issues. (See comment on Requirement R3 above.)
		(6) Consider making the R3 VSLs based on a percent of the number of maintenance activities required by the PSMP in a stated time period, rather than on a percent of the total number of Components.
		(7) There is no maintenance activity listed to verify that protection system component settings meet the design intent of the protection system. In other words, there is no required activity to confirm that the “specified” settings are correct and appropriate. This introduces a potential reliability gap into the Protection System maintenance program.
		(8) In Table 1-1, the term “acceptable measurement of power system input values” is somewhat vague. A tolerance value or reference to industry standards should be provided.
		(9) In Table 1-3, the activity should include verifying that the current and voltage signal values are within design tolerances, not just that signal values are present.
		(10) In Table 1-4(a) Component Attributes - the reference to UFLS systems is missing in the exclusion that refers to UVLS systems. (UFLS is included in Tables 1-4(b) through 1-4(d).)

		(11) In table 1-4(f), there should be a reference to “alarming” in addition to “monitoring” in the first cell of the next-to-last row
		(12) In table 1-4(f), why is the last row limited to VRLA station batteries? Should the same exclusion apply to VLA batteries?
		(13) In Table 1-5, a “12 calendar year” interval is too long for “Unmonitored control circuitry associated with SPS” and “Unmonitored control circuitry associated with protective functions.” We suggest this be changed to 6 years. Similar unmonitored attributes related to battery maintenance have a 6 calendar year interval.
		(14) In Table 2, the phrase “location where corrective action can be initiated” is unclear, and we suggest that a more definitive description be used. Also, why is the word “DETECTION” in all-caps?
		(15) In Table 3, the maintenance activity should include verifying that Protection System Component settings meet the design intent of the Protection System. For example, any reclosing function should be disabled on UFLS and UVLS relay systems.
		(16) In Table 3, In Table 1-1, the term “acceptable measurement of power system input values” is somewhat vague. A tolerance value or reference to industry standards should be provided.
		(17) The Implementation Plan is overly long and complicated. Entities (including Regional Entities) will have to track and apply multiple versions of this standard for 14 years. It would be preferable to have a much shorter implementation plan, so that only one version of the standard will be applicable, recognizing that for some Components no action will be required under the standard for a number of years.
Response:	**Thank you for your comments.**	
	1. The SDT will attempt to properly capitalize defined terms throughout the standard.	

	2. The SDT specifically chose the phrase "initiate resolution" because of the concern that many more complex Unresolved Maintenance Issues might require greater than the remaining maintenance interval to resolve. For example, a problem might be identified on a VRLA battery during a 6 month check. In instances such as one that requiring battery replacement as part of the long term resolution, it is highly unlikely that the battery could be replaced in time to meet the 6 calendar month requirement for this maintenance activity. The SDT does not believe entities should be found in violation of a maintenance program requirement because of the inability to complete a remediation program within the original maintenance interval. The SDT does believe corrective actions should be timely but concludes it would be impossible to postulate all possible remediation projects and therefore, impossible to specify bounding time frames for resolution of all possible Unresolved Maintenance Issues or what documentation might be sufficient to provide proof that effective corrective action has been initiated. The SDT has clarified the intent of the requirement to initiate resolution of Unresolved Maintenance Issues by including it separately as Requirement R5 and revising the language such that the responsible entity must demonstrate its efforts to correct Unresolved Maintenance Issues.
	3. The SDT agrees with your observation and has modified the data retention requirements accordingly.
	4. The SDT agrees with your observation and has modified VSL for Requirement R2 accordingly.
	5. The percentages relate to the number of violations of the respective requirement reported within the compliance monitoring period relative to the number of components within that component type. PRC-005-2 only requires the entity "… initiate resolution" of the issue found. The SDT recognizes that performance of the activities necessary to resolve an issue are entirely dependent upon the circumstances surrounding that issue and, consequently, will require varying amounts of resources and time to complete the process. It is for this reason the SDT crafted the requirement to only require initiation of the process.
	6. The SDT disagrees. The entity must complete all required activities on any specific component in order to be compliant, regardless of the number of activities scheduled for that component.
	7. The SDT believes that adequacy of settings is more properly a design issue and should not be included in a maintenance standard.

	8. The SDT believes it is more appropriate for entities themselves to establish acceptance criteria that meet the performance requirements necessary for the proper operation of their Protection Systems.
	9. The action, "verify" is specified within the PSMP definition as "Determine that the component is functioning correctly." Therefore, the SDT believes that the suggested change is unnecessary.
	10. The SDT agrees. Table 1-4(a) has been modified as you suggest. The modified text has been moved to the header of the tables.
	11. The SDT agrees. Table 1-4(f) has been modified as you suggest.
	12. The SDT agrees. Table 1-4(f) has been modified as you suggest.
	13. The SDT disagrees and believes that the 12 year requirement for SPS's is in alignment with the Table 1-5 row 4 requirement for testing of unmonitored trip paths for control circuitry with protective function in other Protection Systems.
	14. Based on a lack of other comments received on this topic, the SDT believes that this description has sufficient clarity. The word "detection" on Table 2 has been corrected to lower case font.
	15. The first row of Table 3 requires that settings be verified to be as specified. The SDT believes this to be a proper maintenance function but that the determination of the adequacy of settings (or, for that matter, design criteria) is more properly a design issue and should not be included in a maintenance standard.
	16. The SDT believes it is more appropriate for entities themselves to establish acceptance criteria that meet the performance requirements necessary for the proper operation of their Protection Systems.

	17. The SDT disagrees. It is not practical for all entities to rapidly transition all of their protection systems to the new program, especially with some component types on maintenance intervals of up to 12 years. Nonetheless, all in scope Protection Systems must either be being maintained by either a PRC-005-1 program or a PRC-005-2 program. The SDT believes the graded approach mapped out in the Implementation plan is practical. Finally, if in order to lessen the complexity of documentation requirements, an entity wishes to implement PRC-005-2 on a more rapid rate than laid out in the Implementation plan, they are free to do so.	
Central Lincoln		We are concerned about what exactly "initiate resolution" means in R3. We foresee this being a potential area of disagreement between registrants and CEAs when a registrant believes an open work order suffices and the CEA wants to see schedules or purchase orders. Neither M3 nor the FAQs address this.
Response: Thank you for your comment. **The SDT has clarified the intent of the requirement to initiate resolution of Unresolved Maintenance Issues by including it separately as Requirement R5 and revising the language such that the responsible entity must demonstrate its efforts to correct Unresolved Maintenance Issues because of the concern that many more complex Unresolved Maintenance Issues might require greater than the remaining maintenance interval to resolve. For example, a problem might be identified on a VRLA battery during a 6 month check. In instances such as one that requiring battery replacement as part of the long term resolution, it is highly unlikely that the battery could be replaced in time to meet the 6 calendar month requirement for this maintenance activity. The SDT does not believe entities should be found in violation of a maintenance program requirement because of the inability to complete a remediation program within the original maintenance interval. The SDT does believe corrective actions should be timely but concludes it would be impossible to postulate all possible remediation projects and therefore, impossible to specify bounding time frames for resolution of all possible Unresolved Maintenance Issues or what documentation might be sufficient to provide proof that an entity is correcting these issues.**		
Dynegy Inc.		For Facilities listed under 4.2, are Reserve Auxiliary Transformers supposed to be included?

Response: Thank you for your comment.

No, Reserve Auxiliary Transformers or system connected station service transformers were intentionally removed from the Applicability in a previous draft. Generator-connected station service transformers are often connected to the generator bus directly without an interposing breaker; thus, the Protection Systems on these transformers will trip the generator as discussed in 4.2.5.1. and are thus included. Reserve auxiliary or system connected station service transformers Protection Systems will not directly result in the trip of a generator and as such are omitted from the Applicability of the standard.

American Electric Power		1. As it stands, if an entity adopts a more stringent maintenance program but fails to meet it, that entity could be found non-compliant despite continuing to abide by the minimum requirements of the standard itself. Entities should have the ability, if they so choose, to include additional maintenance activities or more stringent intervals than specified within the standard without concern of penalty in the event they are unable to accomplish them. In short, entities should only be audited against the requirements stated within the standard. Table 1-3 of the standard lists the minimum required maintenance activities for voltage and current sensing devices as "Verify that current and voltage signal values are provided to the protective relay." 2. Consistent with Table 1-3, Section 15.2.1 of the Supplementary Reference states that an entity "...must verify that the protective relay is receiving the expected values from the voltage and current sensing devices..." The Supplementary Reference further offers examples of how this requirement may be satisfied with most examples referencing the need to verify the signal at each relay in the circuit. We recognize the need to verify a voltage signal at each protective relay, as these devices are wired in parallel and an open circuit at one location may not impact the other devices on the circuit. However, we do not agree that there is a need to verify a current signal at each protective relay. Current devices are wired in series, and an open circuit at any location will impact all other devices on the circuit. For this reason, a single measurement of the current circuit is sufficient. We recommend updating Table 1-3 and the supplementary reference to account for the different physical characteristics of voltage and current circuits. 3. This standard encompasses a very broad range of component types and functionality across broad segments of the BES. The proposed VSLs and VRFs place the same level of severity or priority on facilities that serve local load with that of an EHV facility. The percentages indicated in the VSLs seem to be too strict based upon the vast quantity of elements in scope and broad range of application. Other standards have applicability for certain thresholds of voltage levels, etc. Why not this standard as well?

Response: Thank you for your comments.

1. **The standard and the Supplementary Reference and FAQ document have been changed to address your concerns. Specifically, Requirement R1 part 1.3 has been removed; Requirement R3 has been revised so that, for time-based programs, entities shall comply with the tables; Requirement R4 has been added to address performance-based maintenance, and Requirement R5 has been added to address Unresolved Maintenance Issues.**
2. **An open circuit is not the only failure mechanism for a CT secondary circuit. Grounded CT secondary wiring can result in situation where accurate current is present in the part of the secondary circuit upstream of the ground but current would be shunted to ground and might not pass through devices downstream of the ground. Entities should not interpret PRC-005-2 as specifying "how" to test but rather that PRC-005-2 only specifies "what" to test. Entities are free to determine creative ways to fulfill requirements.**
3. **VSLs characterize "how bad did you miss a requirement", rather than on the impact to the BES. The percentages indicated in the VSLs follow demarcation guidelines given by NERC to Standard Drafting Teams. With the magnitude of the total number of Protection System components for many entities likely to be very large, exceeding 5% of that total equates to failing to perform maintenance and testing on a (potentially) large number of components, and should be reflected by a Severe VSL. The SDT further believes that this standard should be applied uniformly to the applicable facilities, rather than stratifying it to reflect different system voltages.**

Lincoln Electric System		In reference to the zero tolerance policy evident within PRC-005-2, LES offers the following suggestion: Set up an annual review of a random set sample (20% for example) of Protection System equipment to self-verify compliance. If issues arise, allow the entity the opportunity to correct the issue, make the necessary procedural and/or documentation adjustments and not be considered non-compliant. The idea is to allow entities the opportunity to continually improve their practices and procedures; in essence, allow them to show they are attempting to follow a "culture of compliance". If habitual problems arise, then non-compliance will be evident. One example that justifies this approach is software glitches or improper programming. As more and more systems become automated, scheduling of maintenance will be done automatically through various types of software. If a program has even one attribute set incorrectly, it could not function as intended and would potentially set up incorrect intervals for maintenance and testing. It was not intended this way by the entity and they are not intentionally disregarding the standards, but could nevertheless be put in a situation where a maintenance interval is missed. An annual review would catch things like this and allow an entity to continuously improve their program without self-reporting. This concept is expanded from a current draft version of several CIP standards; therefore, it is being at least considered by other drafting teams.
Response: Thank you for your comments. **The NERC criteria for VSLs do not permit any level of non-performance without being in violation. The graded approach of the VSL for Requirement R3 provides for an escalating degree of severity for increasing degrees of non-compliance.**		
NIPSCO		The new standard itself, the implementation plan and supplemental reference/FAQ makes up more than 100 pages of material. Granted that several standards are being combined here, still it is simply too involved to monitor. And there is still not enough detail in the standard leaving items which are ambiguous and open to interpretation, and therefore open to fines. In order to remove such interpretation, maintenance documentation will need to be precise and extensive. This will necessitate more and more staff to control and validate data. Adding staff is great but it does not seem to ensure that there is increased reliability.

Response: Thank you for your comment. **FERC Order 693 and the approved SAR assign the SDT to develop a standard with maximum allowable intervals and minimum maintenance activities. The intervals and activities specified are believed by the SDT to be technically effective, in a fashion that may be consistently monitored for compliance.**		
Entergy Services		We understand and disagree with the SDT position on the following recommendation. We do not agree with proposed Section 4.2.1 applicability since it captures only a portion of the previously approved applicability Interpretation (PRC-005-1a) which was developed specifically for PRC-005-1. We suggest the draft standard be revised to conform to the wording in the Interpretation: "Protection Systems that are installed for the purpose of detecting faults on BES Elements (lines, buses, transformers, etc.) and trips an interrupting device that interrupts current supplied directly from the BES Elements."
Response: Thank you for your comment. **The SDT believes that the Applicability as stated in PRC-005-2 is correct and that it supports the reliability of the BES. The SDT observes that the approved Interpretation addresses the term, "transmission Protection System", and notes that this term is not used within PRC-005-2; thus the interpretation does not apply to PRC-005-2. PRC-005-2 specifically addresses "Protection Systems that are installed for the purpose of detecting faults on BES Elements." Please see Section 2.3 of the Supplementary Reference and FAQ document for additional discussion.**		

Independent Electricity System Operator		The IESO disagrees with the concept that auditors use the standards as minimum requirements and evaluate compliance based on a registered entity's own governance. We believe that the entity could be found non-compliant with Requirement R3 if they fail to follow the internal maintenance intervals established in their PSMP, even though actual maintenance intervals are no less frequent than the prescribed maximum intervals established in the draft standard. The potential for such a finding will discourage conscientious entities from setting higher internal targets for their planned maintenance and promote compliance with only the minimum requirements of the standard. We therefore propose the following revision to Requirement R3:R3. Each Transmission Owner, Generator Owner, and Distribution Provider shall implement and follow its PSMP and initiate resolution of any unresolved maintenance issues. In the case of time-based maintenance programs, each Transmission Owner, Generator Owner, and Distribution Provider is permitted to deviate from its PSMP provided that actual maintenance intervals do not exceed those specified in Tables 1-1 through 1-5, Table 2 and Table 3. [Violation Risk Factor: High] [Time Horizon: Operations Planning]
Response: Thank you for your comments. The standard and the Supplementary Reference and FAQ document have been changed to address your concerns. Specifically, Requirement R1 part 1.3 has been removed; Requirement R3 has been revised so that, for time-based programs, entities shall comply with the tables; Requirement R4 has been added to address performance-based maintenance, and Requirement R5 has been added to address Unresolved Maintenance Issues.		

Liberty Electric Power LLC		With the development and publication of maximum maintenance and testing intervals (the Tables), there is no longer a reliability need for a RE to identify the associated maintenance intervals for Protection System Components. Further, REs who wish to perform these activities in shorter intervals than those allowed by the standard (See Supplementary Reference, page 27,"If your PSMP (plan) requires activities more often than the Tables maximum then you must perform and document those activities to your more stringent standard.")As noted in Question 5, if the entity completes all activities within the maximum interval allowed by the standard, there can be no reliability concern; if there is a reliability issue, then the table interval is incorrect. I would suggest the following changes.1. Change R1.2 to read "Identify any Protection System component where the RE is using a performance based maintenance interval. No batteries associated with the station DC supply component type of Protection System shall be included in a performance based system".2. Change R1.3 to read "The intervals for time-based programs are established in Table 1-1 through 1-5, Table 2, and Table 3".3. Change M1 to add the phrase "for performance-based components" after the words "maintenance intervals".4. In M1, replace the words "the type of maintenance program applied (time-based, performance based, or a combination of these maintenance methods)' with the words "the identification of any protection system components using performance based intervals".
Response Thank you for your comments. The standard and the Supplementary Reference and FAQ document have been changed to address your concerns. Specifically, Requirement R1 part 1.3 has been removed; Requirement R3 has been revised so that, for time-based programs, entities shall comply with the tables; Requirement R4 has been added to address performance-based maintenance, and Requirement R5 has been added to address Unresolved Maintenance Issues.		

Ameren		(1)Measure M3 on page 5 should only apply to 99.5% of the components. Please revise to state: "Each ... shall have evidence that it has implemented the Protection System Maintenance Program for 99.5% of its components and initiated...." PRC-005-2 unrealistically mandates perfection without providing technical justification. A basic premise of engineering is to allow for reasonable tolerances, even Six Sigma allows for defects. Requiring perfection may well harm reliability by distracting valuable resources from higher priority duties concerning the Protection System. We are not asking for the VSL to be changed. No one is perfect and it is impractical to imply perfection is achievable. The consequence of a very small number of components having a missed or late maintenance activity is insignificant to BES reliability. Our proposed reasonable tolerance sets an appropriate level of performance expectation. We disagree with the notion that this is "non-performance". (2) An alternate approach regarding the unrealistic perfection of M3 is to correctly recognize that the protection of the primary BES is the objective. Most Protection Systems are redundant by design and the entity needs to be afforded the opportunity to show that a redundant component met the PSMP thereby providing the required protection. The entity should be allowed a reasonable time frame of one calendar increment to maintain the component in question. Our concern stems from the tens of thousands of components in a PSMP, and the reality that rarely but occasionally a data base error or outage scheduling issue may result in a very small number component exceeding their maximum interval. As long as the entity can show that BES protection was sustained and maintains the component quickly (e.g. within one calendar month of discovery), BES reliability has been maintained. (3) Now that FERC has approved the Project 2009-17 Interpretation, please acknowledge more directly in the Supplement that the 'transmission Protection System' that is now approved. NERC interprets "transmission Protection System," as it appears in Requirements R1 and R3 of PRC-004-1 and Requirements R1 and R2 of PRC-005-1, to mean "any Protection System that is installed for the purpose of detecting faults on transmission elements (lines, buses, transformers, etc.) identified as being included in the Bulk Electric System (BES) and trips an interrupting device that interrupts current supplied directly from the BES."

Response: Thank you for your comments.

1. **The NERC criteria for VSLs do not permit any level of non-performance without being in violation. The graded approach of the VSL for Requirement R3 provides for an escalating degree of severity for increasing degrees of non-compliance.**
2. **Regarding redundancy, the SDT believes that it is important that redundant components be maintained within the indicated interval, and the prescribed interval already considers the reliability benefits of redundant equipment. It should be noted that misoperations not only occur for failure to operate for valid faults but also operation of a protection system for an invalid, non-fault condition. It is important that both components be maintained within the specified intervals to help preclude this second type of misooperation – e.g., over tripping of relays.**
3. **The SDT believes that the Applicability as stated in PRC-005-2 is correct and that it supports the reliability of the BES. The SDT observes that the approved Interpretation addresses the term, "transmission Protection System", and notes that this term is not used within PRC-005-2; thus the interpretation does not apply to PRC-005-2. PRC-005-2 specifically addresses "Protection Systems that are installed for the purpose of detecting faults on BES Elements." Please see Section 2.3 of the Supplementary Reference and FAQ document for additional discussion.**

Northeast Utilities		1. The definition of "Component" in PRC-005-2 Draft 1, states "Another example of where the entity has some discretion on determining what constitutes a single component is the voltage and current sensing devices, where the entity may choose either to designate a full three-phase set of such devices or a single device as a single component." However, in Section 15.2 of Supplementary Reference & FAQ it states: "The intent of the maintenance activity is to verify the input to the protective relay from the device that produces the current or voltage signal sample." Please consider reconciling these two sections (definition of "Component" and Section 15.2) to allow the entity to consider a relay as the single component versus the voltage and current sensing devices, and pursuant with Section 15.2 perform the voltage and current checks to the inventoried relays. This approach will ensure that the CT and PT check to each relay is performed. Section 15.2 of Supplementary Reference & FAQ states in the second paragraph "The intent of the maintenance activity is to verify the input to the protective relay from the device that produces the current or voltage signal sample." Please consider revising the last bullet in Section 15.2, paragraph 3 from "Any other method that provide documentation that the expected transformer values as applied to the inputs to the protective relays are acceptable" to "Any other method that verifies the input to the protective relay from the device that produces the current or voltage signal sample." 2. As shown (see Figure A-2) and discussed in Appendix A of Supplementary Reference & FAQ list, there are four elements that are not verified. Following the identification of the four elements that are not verified, a practical solution is provided for testing methods on three of the four elements. Please provide a practical solution for the fourth element.

Response: Thank you for your comments.

1. **The SDT does not believe a discrepancy exists. CTs and PTs or other current and voltage sensing devices are indeed Protection System Components. Section 15.2 of the Supplementary Reference and FAQ document is describing a maintenance activity that is to be performed to validate proper function of that Component type. The Supplementary Reference and FAQ document has been revised to clarify.**
2. **Appendix A to the Supplementary Reference and FAQ document (with the imbedded figures) is intended to provide an example of the application of monitoring to minimize maintenance activities and maximize maintenance intervals, but is not intended to be a comprehensive treatise of the subject.**

MidAmerican Energy Company		1. The following comment was submitted in the last comment period: In the background section of the implementation plan in item two it states "..it is unrealistic for those entities to be immediately in compliance with the new intervals." Recent compliance application notices indicate that auditors are requiring entities to include proof of compliance to maintenance intervals by providing the most recent and prior maintenance dates. The implementation document could be improved by providing clarity to what is expected with regard to when an entity is expected to provide evidence of maintenance interval compliance given the quoted item above. As an example in the section the implementation plan for a 6 year interval item it states: " The entity shall be at least 30% compliant on the first day of the first calendar quarter 3 years following applicable regulatory approval.." In keeping with the previously quoted "reasonableness" criteria it would seem that 30% compliant would mean only one test action would be needed to be completed by the indicated deadline and the next one would be required no later than 6 years from that first test. It is recommended that the implementation plan document be improved to clarify this issue. The consideration of comments response to the above did not completely address the issue that led to the comment. In the Tables in PRC-005-2 there are maintenance items that an entity may not have had in their PRC-005-1 compliance program even though they did have a compliant maintenance program (e.g. battery continuity testing) for that Protection System component. As the transition is made to the PRC-005-2 requirement the above clarification should be made to better define what achievement of PRC-005-2 compliance is for that component.
		2. Section 4.2.2 includes UFLS systems installed per the ERO requirements - excluding any additional UFLS systems that a utility has on their system. Section 4.2.3 includes UVLS systems "installed to prevent system voltage collapse or voltage instability for BES reliability". It is assumed that this would only include UVLS systems required by the ERO, but it is not clear as to what is in scope. It is suggested that the wording of 4.2.3 be changed to match the wording in 4.2.2.
		3. In the implementation plan in the R2 and R3 requirements plans, in item a. of each there is a parenthetical statement regarding generating plant scheduled outage intervals. A similar parenthetical statement should be added to the b. and c. items of each of these plans.

		4. The purpose statement of the standard seems to be inconsistent with the applicability section. To correct this it is suggested that the words “affecting the reliability” be removed from the purpose statement.
		5. For consistency with the changes from 3 months to 4 months in the tables of the standard it is suggested that the second item in Table 1-4(b) be changed from 6 calendar months to 7 calendar months.
		6. In the tables for dc Supply the term “unit-to-unit” is used along with “intercell” when referring to measurement of connection resistance. From the applicable IEEE standards (e.g. IEEE 450) the standard terminology seems to be “intercell”. It is recommended that the “unit-to-unit” term be removed to avoid confusion regarding what is to be verified.

Response: Thank you for your comments.

1. **The SDT agrees with your comment and has modified the Implementation plan to better indicate that, for activities being added to an entity's program as part of PRC-005-2 implementation, evidence will be available to show only a single performance of the activity until a full maintenance interval has transpired following initial implementation.**
2. **Entities are required to install UFLS per PRC-007; there are no standards which require entities to install UVLS. However, if entities choose to install UVLS to meet minimum system performance requirements, several standards (including the current PRC-011 and the proposed PRC-005-2) apply. Section 4.2.3 is specifically intended to address these UVLS.**
3. **The SDT provided the allowance for generator plants to allow them until their first maintenance outage to begin program implementation. It is believed that the entity would then likely perform all maintenance on the protection system for a given generator, GSU and, if so equipped, generator connected station auxiliary transformer during that maintenance window. It seems unlikely that an entity would perform maintenance on only a portion of a protection system. Thus, the SDT concludes that inclusion of the parenthetical to the 2nd and 3rd bullets would only add confusion and provide little or no benefit to generator plants in the implementation of their program.**
4. **The purpose of the standard expresses the general intent of the standard, and is further clarified by the Applicability.**
5. **The SDT believes that a 6-month interval is appropriate for these activities.**
6. **The term "unit-to-unit" is used for the conductor utilized to connect one multi-celled battery jar to an adjacent multi-celled battery jar. The SDT does not believe this terminology causes wide spread confusion.**

Manitoba Hydro		-Definition of Protection System Maintenance Program: The definition included in the proposed PRC-005-2 is not the same as the definition provided in the document "Definition for Approval", which also includes items "Upkeep" and "Restore".

Response: Thank you for your comments.

The SDT agrees with your observation and will review the associated documents to attain consistency.

American Transmission Company		a) Change the text of “Standard PRC-005-2 - Protection System Maintenance” Table 1-5 on page 19, Row 1, Column 3 to: ”Verify that each a trip coil is able to operate the circuit breaker, interrupting device, or mitigating device.” Or alternatively, “Electrically operate each interrupting device every 6 years.” Trip coils are designed to be energized no longer than the breaker opening time (3-5 cycles). They are robust devices that will successfully operate the breaker for 5,000-10,000 electrical operations. The most likely source of trip coil failure is the breaker operating mechanism binding, thereby preventing the breaker auxiliary stack from opening and keeping the trip coil energized for too long of a time period. Therefore, trip coil failure is a function of the breaker mechanism failure. Exercising the breakers and circuit switchers is an excellent practice. We would encourage language that would suggest this task be done every 2 years, not to exceed 3 years. Exercising the interrupting devices would help eliminate mechanism binding, reducing the chance that the trip coils are energized too long. The language as currently written in Table 1-5 row 1, will also have the unintentional effect of changing an entities existing interrupting device maintenance interval (essentially driving interrupting device testing to a less than 6 year cycle). b) Change the text of “Standard PRC-005-2 - Protection System Maintenance” Table 1-5 on page 19, Row 3, Column 2 to: “12 calendar years” The maximum maintenance interval for “Electromechanical lockout and/or tripping devices which are directly in a trip path from the protective relay to the interrupting device trip coil” should be consistent with the “Unmonitored control circuit” interval which is 12 calendar years.In order to test the lockout relays, it may be necessary to take a bus outage (due to lack of redundancy and associated stability issues with delayed clearing). Increasing the frequency of bus outages (with associated lines or transformers) will also increase the amount of time that the BES is in a less intact system configuration. Increasing the time the BES is in a less intact system configuration also increases the probability of a low frequency, high impact event occurring. Therefore, the Maximum Maintenance Interval should be 12 years for lockout relays. c) ATC's remaining concern for PRC-005-2 is with definition and timelines established in Table 1-5. ATC is recommending a negative ballot since, as written, the testing of “each” trip coil and the proposed maintenance interval for lockout testing will result in the increased amount of time that the BES is in a less intact system configuration. ATC hopes that the SDT will consider these changes.

Response: Thank you for your comments.

a) **While the SDT agrees with much of your observation about circuit breaker operations, this standard applies to Protection System maintenance and per the Protection System definition does not include the entire circuit breaker. As such we are limited to exercising the trip coils and seeing that they have the intended effect on the interrupting device. A simple cycling of the breaker should have minimal impact on the scheduling of the entities breaker maintenance program.**

b) **The SDT believes that electromechanical lockout relays need periodic operation. As such, these devices are required to be exercised at the same 6 year interval required for electromechanical relays. The SDT recognizes the risk of human error trips when working with testing of lockout devices but believes these risks can be managed. Performance-based maintenance is an option if you want to extend your intervals beyond 6 years. The SDT, however, has modified Table 1-5 to remove other auxiliary relays, etc, from this activity, and clarified that the verification of such devices is included within the 12-year unmonitored control circuitry verification.**

c) **As noted above, the SDT has modified Table 1-5 to remove other auxiliary relays, etc, from the 6-year activity, and clarified that the verification of such devices is included within the 12-year unmonitored control circuitry verification. However, the SDT believes that the other activities addressed in your comment need to be performed as reflected in Table 1-5.**

Southern Company Transmission		Table 1-5: Need clarification on "continuity and energization or ability to operate". What does this mean?

Response: Thank you for comment.

This entry in Table 1-5 has been modified to "Control circuitry whose integrity is monitored and alarmed". Section 15.3 of the Supplementary Reference and FAQ document provides additional discussion on this topic.

Utility Services, Inc		Thank you for the opportunity to address the new documentation and for your efforts.

Response: Thank you for comment.

ITC Holdings		ITC Holdings continues to object to the requirement to exercise auxiliary relays on a 6 year interval. We repeat our previous comments as follows: "It has been our experience that trip failures are rare and that our present 10 year control, trip tests, and other related testing are sufficient in verifying the integrity of the scheme. Section 8.3 of the Supplementary Reference notes statistical surveys were done to determine the maintenance intervals. Were auxiliary relays included in these surveys in such a way to verify that they indeed require a 6 year maintenance interval? We recommend they be considered part of the control circuitry, with a 12 year test cycle." Previous responses from the SDT were: "The SDT believes that the appropriate interval for electromechanical devices such as aux or lockout relays should remain at 6 years, as these devices contain "moving parts" which must be periodically exercised to remain reliable." ITC requests that the statistical basis for the 6 year interval be published. If it is not clear that lockout relays and other auxiliary relays must be exercised on a 6 year interval, then the requirement should be changed to 12 years.
Response: Thank you for your comments. **The SDT believes that electromechanical lockout relays need periodic operation. As such, these devices are required to be exercised at the same 6 year interval required for electromechanical relays. The SDT recognizes the risk of human error trips when working with testing of lockout devices but believes these risks can be managed. Performance-based maintenance is an option if you want to extend your intervals beyond 6 years. The SDT has modified Table 1-5 to remove other auxiliary relays, etc, from this activity, and clarified that the verification of such devices is included within the 12-year unmonitored control circuitry verification as you have suggested.**		
Ingleside Cogeneration LP		Ingleside Cogeneration, LP, continues to believe that the six year requirement to verify channel performance on associated communications equipment will prove to be more detrimental than beneficial on older relays. Clearly newer technology relays which provide read-outs of signal level or data-error rates will easily verified, but the tools which measure power levels and error rates on non-monitored communication links are far more intrusive. After the technician uncouples and re-attaches a fiber optic connection, the communications channel may be left in worse shape after verification than it was prior to the start of the test.

Response: Thank you for your comments. **There are less intrusive ways to verify channel performance that do not require disconnecting communication terminations. It is up to the entity to determine specific maintenance techniques.**		
CenterPoint Energy		For the "Unmonitored control circuitry associated with protective functions", the Table 1-5 requirement is to "Verify all paths of the trip circuits through the trip coil(s) of the circuit breakers or other interrupting devices" every 12 calendar years. CenterPoint Energy recommends this requirement be revised to "No periodic maintenance specified". CenterPoint Energy believes that verifying all tripping paths is a commissioning task, not a preventive maintenance task. CenterPoint Energy performs such checks on new stations and whenever expansion or modification of existing stations dictates such testing. This type of testing can negatively impact BES system reliability with the outages that are required and by exposing the electric system to incorrect tripping. Likewise, CenterPoint Energy recommends the requirement in Table 1-5 to "Verify all paths of the control circuits essential for proper operation of the SPS" every 12 years be revised to "No periodic maintenance specified".
Response: Thank you for your comments. **The SDT believes that it is possible to manage the risks that you describe and that performance of these trip path verifications will be an overall benefit to the reliability of the BES.**		
Oncor Electric Delivery Company LLC		PRC-005-2 is a vast improvement over the vagueness of the existing standard (PRC-005-1), that the new standard makes compliance much easier than the present standard. The new standard recognizes the advances in relay technology and reliability, particularly the benefits of microprocessor based relays. The standard also provides greater flexibility on its implementation while recognizing the benefits of a performance based methodology, particularly as it relates to battery testing. The revised standard eliminates the requirement for a "summary of maintenance and testing procedures" which was vague and provided no real value to the registered entities. Operational and administrative efficiencies can be realized by consolidating the relay testing and maintenance requirements into one standard (PRC-005-1, PRC-008-0, PRC-011-0, PRC-017-0).
Response: Thank you for your comments.		

City of Austin dba Austin Energy		If a Registered Entity has a PSMP that is more stringent than the intervals in PRC-005-2, the Registered Entity should not be considered out of compliance if it fails to meet its internal interval but remains within the interval set forth in PRC-005-2.
Response: Thank you for your comments. The standard and the Supplementary Reference and FAQ document have been changed to address your concerns. Specifically, Requirement R1 part 1.3 has been removed; Requirement R3 has been revised so that, for time-based programs, entities shall comply with the tables; Requirement R4 has been added to address performance-based maintenance, and Requirement R5 has been added to address Unresolved Maintenance Issues.		
BGE		When the term "Maintenance Correctable Issue" was revised to "Unresolved Maintenance Issue", it appears that the PRC-005-2 Protection System Maintenance / Supplementary Reference and FAQ document was not properly updated to reflect this change. There are inconsistencies throughout the entire document were the old term is still showing up instead of the new term, and vice versa.
Response: Thank you for your comments. **The SDT has attempted to correct the terminology inconsistencies you have mentioned between the Standard and the Supplementary Reference and FAQ document.**		
VRFs/VSLs		
Xcel Energy, Inc.	Negative Ballot	The VSL for R3 is confusing because of the lack of a specified time horizon. Are the percentages quoted on an annual schedule basis, an audit period, or a continuous percentage measurement of any previously scheduled maintenance activities? Greater clarity is needed on the intent of this VSL.
Response: Thank you for your comment. **The VSLs that use a graduated VSL have been revised based, in part, on the comments you have provided. The percentages relate to the number of violations reported within the compliance monitoring period relative to the number of components within that component type.**		

Ameren Services	Negative Poll	The VRF for R3 should be Low. Many entities presently do not perform some of the specified maintenance activities on some of their components. The risk to the BES is quite low as proven by the extremely reliable BES performance. We are not aware of such omissions in Protection System performance leading to widespread outages, cascading or uncontrolled separation. This coupled with NERC's insistence on 100% perfect completion of all maintenance for even the Lower VSL leads to an inappropriate and unjustified VRF/VSL combination.
Response: The VRF value of "high" stems from consideration of an entity not performing any maintenance and testing of their Protection System. Specifically, a "high" VRF, for a planning time horizon requirement, addresses violations of requirements that could directly cause or contribute to BES instability, separation, or cascading. While not every failure to properly perform maintenance WILL do these things, they can very well contribute to them, as evidenced by involvement of Protection Systems in every recent significant BES disturbance.		
Flathead Electric Cooperative	Negative Poll	do not believe the severe VSL should apply to distributed UFLS
Response: The VSL is a measure of the completeness of the execution of a requirement. Where a binary evaluation of compliance with a particular requirement is prescribed, the NERC VSL guidelines require the violation level to be severe. If the compliance can be demonstrated to be partially complete, a graduated violation severity level is allowed. The NERC Criteria for setting Violation Severity Levels states that it is preferable to have four VSLs for each requirement.		
Independent Electricity System Operator	Negative Poll	The IESO continues to disagree with the High VRF for R3 which asks for implementing the maintenance plan (and initiate corrective measures) whose development and content requirements (R1 and R2) themselves have a Medium VRF. Failure to develop a maintenance program with the attributes specified in R1, and stipulation of the maintenance intervals or performance criteria as required in R2, will render R3 not executable. Hence, we reiterate our position that the VRF for R3 be changed to Medium.

Response: The VRF value of "high" stems from consideration of an entity not performing any maintenance and testing of their Protection System. Specifically, a "high" VRF, for a planning time horizon requirement, addresses violations of requirements that could directly cause or contribute to BES instability, separation, or cascading. While not every failure to properly perform maintenance WILL do these things, they can very well contribute to them, as evidenced by involvement of Protection Systems in every recent significant BES disturbance.		
Liberty Electric Power LLC	Negative Poll	The percentage structure on unresolved maintenance issues presents problems. Smaller entities are unlikely to ever have more than a handful of unresolved issues, meaning a single failure to initiate would automatically be a High VSL. There would also be a disincentive to close out issues from fear that "resolving" them could potentially increase a violation level on a discovered issue.
Response: The VSLs relating to Unresolved Maintenance Issues have been revised to graduated VSLs using a count of violations, rather than a percentage.		
Xcel Energy, Inc.	Negative Poll	The VSL for R3 is confusing because of the lack of a specified time horizon. Are the percentages quoted on an annual schedule basis, an audit period, or a continuous percentage measurement of any previously scheduled maintenance activities? Greater clarity is needed on the intent of this VSL.
Response: Thank you for your comment. **The VSLs that use a graduated VSL have been revised based, in part, on the comments you have provided. The percentages relate to the number of violations reported within the compliance monitoring period relative to the number of components within that component type.**		

END OF REPORT

NERC
NORTH AMERICAN ELECTRIC RELIABILITY CORPORATION

Consideration of Comments

Project 2007-17
Protection System Maintenance and Testing

The Project 2007-17 Protection System Maintenance and Testing Standard Drafting Team thanks all commenters who submitted comments on PRC-005-2. These documents were posted for a 30-day public comment period from February 28, 2012 through March 28, 2012. Stakeholders were asked to provide feedback on the standard and associated documents through a special electronic comment form. There were 56 sets of comments, including comments from approximately 118 different people from approximately 98 companies representing 9 of the 10 Industry Segments, as shown in the table on the following pages.

All comments submitted may be reviewed in their original format on the standard's project page:

http://www.nerc.com/filez/standards/Protection_System_Maintenance_Project_2007-17.html

If you feel that your comment has been overlooked, please let us know immediately. Our goal is to give every comment serious consideration in this process! If you feel there has been an error or omission, you can contact the Vice President of Standards and Training, Herb Schrayshuen, at 404-446-2560 or at herb.schrayshuen@nerc.net. In addition, there is a NERC Reliability Standards Appeals Process.[1]

Summary Consideration of all Comments Received:

Definitions:

The SDT revised the "Inspect" element of the definition of Protection System Maintenance Program (PSMP) to: "Examine for signs of component failure, reduced performance or degradation."

The definition of the term 'Unresolved Maintenance Issue' has been enhanced for additional clarity. The definition now reads: "A deficiency identified during a maintenance activity that causes the component to not meet the intended performance, cannot be corrected during the maintenance interval, and requires follow-up corrective action."

[1] The appeals process is in the Reliability Standards Development Procedures: http://www.nerc.com/standards/newstandardsprocess.html.

The definition of Countable Event was modified to: "A failure of a Component requiring repair or replacement, any condition discovered during the maintenance activities in Tables 1-1 through 1-5 and Table 3 which requires corrective action, or a Misoperation attributed to hardware failure or calibration failure. Misoperations due to product design errors, software errors, relay settings different from specified settings, Protection System Component configuration errors, or Protection System application errors are not included in Countable Events." This change was acknowledged in Attachment A.

Applicability:

The SDT revised Applicability Clause 4.2.5.4 to: "Protection Systems for station service or excitation transformers connected to the generator bus of generators which are part of the BES, that act to trip the generator either directly or via lockout or tripping auxiliary relays."

Requirements:

A minor editorial change was made to Requirement R1 to remove the nested parentheticals.

Tables

In Table 1-2, the interval for the second portion of the first row of the table was changed from six years to 12 years, and extensive changes were made to the last row of the table.

Several activities within Table 1-4a, Table 1-4b, Table 1-4c, Table 1-4d, and Table 1-4f, relating to verification that the station battery can perform properly, were modified with the assistance of representatives of the IEEE Stationary Battery Committee.

Measures

Measure M5 has been revised to include: "…project schedules with completed milestones …"

VSLs

In the High VSL for R1, "entities'" was corrected to "entity's".

The VSLs for Requirement R2 were modified from "reduce Countable Events to less than 4%" to "reduce Countable Events to no more than 4%".

Supplementary Reference Document

Complementary changes were made to the Supplementary Reference Document corresponding to all changes to the standard.

Unresolved Minority Views:

- A few commenters continued to object to the establishment of maximum allowable intervals for the maintenance of various Protection System component types. The SDT continued to respond that FERC Order 693 and the approved SAR direct the SDT to develop a standard with maximum allowable intervals comments and minimum maintenance activities. The SDT believes that the

intervals established within the tables are appropriate as continent-wide maximum allowable intervals.

- Several commenters were concerned that an entity has to be "perfect" in order to be compliant; the SDT responded that NERC standards currently allow no provision for any degree of non-performance relative to the requirements.

- Several commenters continued to question NERC's propriety of including distribution system Protection Systems, almost all related to UFLS/UVLS. The SDT obtained a position from NERC legal staff, and cited this position in responding that these devices are, indeed, within NERC's authority because they are installed for the reliability of the BES.

- A few commenters questioned the inclusion of the dc control circuitry for sudden pressure relays, even though the relays themselves are excluded from the definition of "Protection System;" the SDT reiterated its position that this dc control circuitry is included because the dc control circuitry is associated with protective functions.

- A few commenters objected to the language in the Data Retention section regarding the retention of the maintenance records for two full intervals. The SDT explained that this expectation is consistent with the Compliance Monitoring and Enforcement Program.

- Several commenters suggested removal of Requirement R5, and others expressed concerns regarding Requirement R5 and Unresolved Maintenance Issues. The SDT explained its rationale for the requirement as drafted; and made a minor change to Unresolved Maintenance Issues, as detailed above.

Index to Questions, Comments, and Responses

1. In response to comments, the PSMTSDT revised Requirement R1 to state that an entity's Protection System Maintenance Program (PSMP) shall include, for each Protection System component type, an identification of the maintenance method(s) used, and the identification of the relevant monitoring attributes applied. Do you agree with this change? If you do not agree, please provide specific suggestions for improvement. 13
2. As a result of the changes to Requirement R1, the previous Requirement R3 was separated into three requirements:
   a. Requirement R3 now requires that an entity utilizing a time-based program maintain its Protection System components in accordance with the maximum maintenance intervals listed in the Tables. This change removes the compliance jeopardy associated with an entity having more stringent intervals (in its PSMP) than those listed in the Tables
   b. Requirement R4 (new) requires an entity utilizing a performance-based program maintain its Protection System components in accordance with its performance based Protection System Maintenance Program
   c. Requirement R5 (new) requires an entity to demonstrate efforts to correct identified unresolved maintenance issues. The previous language in Requirement R3 directed that an entity initiate resolution

   Do you agree with this change? If you do not agree, please provide specific suggestions for improvement. 26
3. The Supplemental Reference and FAQ document was revised to reflect changes made to the draft standard and to address additional issues raised. Do you agree with the changes? If you do not agree, please provide specific suggestions for improvement. 49
4. If you have any other comments on this Standard that you have not already provided in response to the prior questions, please provide them here. 64

The Industry Segments are:

1 — Transmission Owners
2 — RTOs, ISOs
3 — Load-serving Entities
4 — Transmission-dependent Utilities
5 — Electric Generators
6 — Electricity Brokers, Aggregators, and Marketers
7 — Large Electricity End Users
8 — Small Electricity End Users
9 — Federal, State, Provincial Regulatory or other Government Entities
10 — Regional Reliability Organizations, Regional Entities

Group/Individual		Commenter	Organization	Registered Ballot Body Segment									
				1	2	3	4	5	6	7	8	9	10
1.	Group	Guy Zito	Northeast Power Coordinating Council										X

1.	Alan Adamson	New York State Reliability Council, LLC	NPCC	10
2.	Greg Campoli	New York Independent System Operator	NPCC	2
3.	Sylvain Clermont	Hydro-Quebec TransEnergie	NPCC	1
4.	Chris de Graffenried	Consolidated Edison Co. of New York, Inc.	NPCC	1
5.	Gerry Dunbar	Northeast Power Coordinating Council	NPCC	10
6.	Mike Garton	Dominion Resources Services, Inc.	NPCC	5
7.	Kathleen Goodman	ISO - New England	NPCC	2
8.	Chantel Haswell	FPL Group, Inc.	NPCC	5
9.	David Kiguel	hydro One Networks Inc.	NPCC	1
10.	Michael R. Lombardi	Northeast Utilities	NPCC	1
11.	Randy MacDonald	New Brunswick Power Transmission	NPCC	9
12.	Bruce Metruck	New York Power Authority	NPCC	6
13.	Lee Pedowicz	Northeast Power Coordinating Council	NPCC	10

Group/Individual	Commenter	Organization	Registered Ballot Body Segment									
			1	2	3	4	5	6	7	8	9	10
14. Robert Pellegrini	The United Illuminating Company	NPCC 1										
15. Si-Truc Phan	Hydro-Quebec TransEnergie	NPCC 1										
16. David Ramkalawan	Ontario Power Generation, Inc.	NPCC 5										
17. Brian Robinson	Utility Services	NPCC 8										
18. Saurabh Saksena	National Grid	NPCC 1										
19. Michael Schiavone	National Grid	NPCC 1										
20. Wayne Sipperly	New York Power Authority	NPCC 5										
21. Tina Teng	Independent Electricity System Operator	NPCC 2										
22. Donald Weaver	New Brunswick System Operator	NPCC 2										
23. Ben Wu	Orange and Rockland Utilities	NPCC 1										
24. Peter Yost	Consolidated Edison Co. of New York, Inc.	NPCC 3										
2. Group	Jim Eckelkamp	Progress Energy										
No additional members listed.												
3. Group	Kent Kujala	DTE Energy			X	X	X					
1. Steven Kerkmaz	RFC 3, 4, 5											
2. David Szulczewski	RFC 3, 4, 5											
4. Group	WILL SMITH	MRO NSRF	X		X		X	X				
1. MAHMOOD SAFI	OPPD MRO 1, 3, 5, 6											
2. CHUCK LAWRENCE	ATC MRO 1											
3. TOM WEBB	WPS MRO 3, 4, 5, 6											
4. JODI JENSON	WAPA MRO 1, 6											
5. KEN GOLDSMITH	ALTW MRO 4											
6. ALICE IRELAND	XCEL(NSP) MRO 1, 3, 5, 6											
7. DAVE RUDOLPH	BEPC MRO 1, 3, 5, 6											
8. ERIC RUSKAMP	LES MRO 1, 3, 5, 6											
9. JOE DEPOORTER	MGE MRO 3, 4, 5, 6											
10. SCOTT NICKELS	RPU MRO 4											
11. TERRY HARBOUR	MEC MRO 3, 5, 6, 1											
12. MARIE KNOX	MISO MRO 2											

Group/Individual	Commenter	Organization	Registered Ballot Body Segment									
			1	2	3	4	5	6	7	8	9	10
13. LEE KITTELSON, OTP, MRO, 1, 3, 4, 5 14. SCOTT BOS, MPW, MRO, 1, 3, 5, 6 15. TONY EDDLEMAN, NPPD, MRO, 1, 3, 5 16. MIKE BRYTOWSKI, GRE, MRO, 1, 3, 5, 6 17. THERESA ALLARD, MPC, MRO, 1, 3, 5, 6												
5. Group	Kieth Morisette	Tacoma Public Utilities										
No additional members listed.												
6. Group	Jesus Sammy Alcaraz	Imperial Irrigation District (IID)	X		X	X	X	X				
1. Jose Landeros, IID, WECC, 1, 3, 4, 5, 6 2. Epi Martinez, IID, WECC, 1, 3, 4, 5, 6 3. Nando Gutierrez, IID, WECC, 1, 3, 4, 5, 6												
7. Group	Louis Slade	Dominion					X	X				
1. Michael Gildea, NERC Compliance Policy, RFC, 5, 6 2. Michael Crowley, Electric Transmission, SERC, 1, 3 3. Sean Iseminger, Fossil & Hydro, SERC, 5 4. Chip Humphrey, Fossil & Hydro, MRO, 5 5. Jeff Bailey, Nuclear, 5 6. Connie Lowe, NERC Compliance Policy, SERC, 5, 6 7. Mike Garton, NERC Compliance Policy, NPCC, 5, 6												
8. Group	Don Jones	Texas Reliability Entity										X
1. Curtis Crews, Texas RE, ERCOT, 10 2. David Penney, Texas RE, ERCOT, 10												
9. Group	Jonathan Hayes	Southwest Power Pool Standards Development Team	X			X						
1. John Allen, City Utilities of Springfield, SPP, 1, 4 2. Greg Froehling, Rayburn Electric, SPP 3. Louis Guidry, CLECO, SPP, 1, 3, 5 4. Jonathan Hayes, Southwest Power Pool, SPP, 2 5. Robert Rhodes, Southwest Power Pool, SPP, 2												

Group/Individual	Commenter	Organization	Registered Ballot Body Segment									
			1	2	3	4	5	6	7	8	9	10
6. Robert Hirchak	CLECO	SPP 1, 3, 5										
7. Brandon Nugent	CLECO	SPP 1, 3, 5										
8. Valerie Pinamonti	AEP	SPP 1, 3, 5										
9. Mahmood Safi	OPPD	SPP 1, 3, 5										
10 Group	Dave Davidson	Tennessee Valley Authority										
1. Rusty Hardison	Transmission O&M	SERC NA										
2. Pat Caldwell	Transmission O&M - Relay	SERC NA										
3. Paul Barnett	Transmission O&M - Substation	SERC NA										
4. Jerry Finley	Power Control Systems	SERC NA										
5. Frank Cuzzort	Nuclear Engineering	SERC NA										
6. Robert Brown	Nuclear Engineering	SERC NA										
7. Robert Mares	Hydro Engineering	SERC NA										
8. Annette Dudley	Hydro O&M	SERC NA										
9. John Henry Sullivan	Fossil Engineering	SERC NA										
10. David Thompson	Compliance	SERC NA										
11 Group	Sam Ciccone	FirstEnergy	X									
1. Jim Kinney	FE	RFC 1										
2. Brian Orians	FE	RFC 5										
3. Rusty Loy	FE	RFC 5										
4. Shawn Gehring	FE	RFC 1										
5. Doug Hohlbaugh	FE	RFC 1, 3, 4, 5, 6										
6. Bill Duge	FE	RFC 5										
7. Chris Lassak	FE	RFC 5										
8. Mike Ferncez	FE	RFC 1										
9. Tim Sheerer	FE	RFC 1										
12 Group	Ron Sporseen	PNGC Comment Group			X							
1. Joe Jarvis	Blachly-Lane Electric Cooperative	WECC 3										
2. Dave Markham	Central Electric Cooperative	WECC 3										
3. Dave Hagen	Clearwater Power Cooperative	WECC 3										

Group/Individual	Commenter	Organization	Registered Ballot Body Segment									
			1	2	3	4	5	6	7	8	9	10
4. Roman Gillen	Consumer's Power Inc.	WECC 1, 3										
5. Roger Meader	Coos-Curry Electric Cooperative	WECC 3										
6. Dave Sabala	Douglas Electric Cooperative	WECC 3										
7. Bryan Case	Fall River Electric Cooperative	WECC 3										
8. Rick Crinklaw	Lane Electric Cooperative	WECC 3										
9. Ray Ellis	Lincoln Electric Cooperative	WECC 3										
10. Annie Terracciano	Northern Lights Inc.	WECC 3										
11. Aleka Scott	PNGC Power	WECC 4, 8										
12. Heber Carpenter	Raft River Electric Cooperative	WECC 3										
13. Steve Eldrige	Umatilla Electric Cooperative	WECC 1, 3										
14. Marc Farmer	West Oregon Electric Cooperative	WECC 3										
13 Group	Brandy A. Dunn	Western Area Power Administration										
No additional members listed.												
14 Group	Cole Brodine	Nebraska Public Power District										
No additional members listed.												
15 Group	Frank Gaffney	Florida Municipal Power Agency				X						
1. Timothy Beyrle	City of New Smyrna Beach	FRCC 4										
2. Jim Howard	Lakeland Electric	FRCC 3										
3. Greg Woessner	Kissimmee Utility Authority	FRCC 3										
4. Lynne Mila	City of Clewiston	FRCC 3										
5. Joe Stonecipher	Beaches Energy Services	FRCC 1										
6. Cairo Vanegas	Fort Pierce Utility Authority	FRCC 4										
7. Randy Hahn	Ocala Utility Services	FRCC 3										
16 Group	David Thorne	Pepco Holdings Inc. & Affiliates	X		X							
1. Carlton Bradshaw	Delmarva Power & Light	RFC 1, 3										
17 Group	Chris Higgins	Bonneville Power Administration	X									
1. Dean Bender	WECC 1											
2. Heather Laslo	WECC 1											
3. Brenda Vasbinder	WECC 1											

Group/Individual	Commenter	Organization	Registered Ballot Body Segment									
			1	2	3	4	5	6	7	8	9	10
4. Greg Vassallo WECC 1 5. Mason Bibles WECC 1 6. Jenifur Rancourt WECC 1, 3, 5, 6 7. Rebecca Berdahl WECC 3 8. Jason Burt WECC 1												
18 Group	Sandra ShFaffer	PacifiCorp										
No additional members listed.												
19 Group	Annette M. Bannon	PPL Supply NERC Registered Organizations					X					
1. Leland McMillan PPL Montana, LLC WECC 5 2. Donald Lock PPL Generation, LLC RFC 5												
20 Group	WILL SMITH	MRO NSRF	X		X		X	X				
1. MAHMOOD SAFI OPPD MRO 1, 3, 5, 6 2. CHUCK LAWRENCE ATC MRO 1 3. TOM WEBB WPS MRO 3, 4, 5, 6 4. JODI JENSON WAPA MRO 1, 6 5. KEN GOLDSMITH ALTW MRO 4 6. ALICE IRELAND XCEL(NSP) MRO 1, 3, 5, 6 7. DAVE RUDOLPH BEPC MRO 1, 3, 5, 6 8. ERIC RUSKAMP LES MRO 1, 3, 5, 6 9. JOE DEPOORTER MGE MRO 3, 4, 5, 6 10. SCOTT NICKELS RPU MRO 4 11. TERRY HARBOUR MEC MRO 3, 5, 6, 1 12. MARIE KNOX MISO MRO 2 13. LEE KITTELSON OTP MRO 1, 3, 4, 5 14. SCOTT BOS MPW MRO 1, 3, 5, 6 15. TONY EDDLEMAN NPPD MRO 1, 3, 5 16. MIKE BRYTOWSKI GRE MRO 1, 3, 5, 6 17. THERESA ALLARD MPC MRO 1, 3, 5, 6												
21 Group	Jason Marshall	ACES Power Marketing Standards	X									

Group/Individual		Commenter	Organization	Registered Ballot Body Segment									
				1	2	3	4	5	6	7	8	9	10
			Collaborators										
1. Shari Heino	Brazos Electric Power Cooperative, Inc.	SERC	1										
2. Mohan Sachdeva	Buckeye Power, Inc.	RFC	3, 4										
3. Erin Woods	East Kentucky Power Cooperative	SERC	1, 3, 5										
4. Scott Brame	North Carolina Electric Membership Corporation	RFC	1, 3, 4, 5										
5. Mark Ringhausen	Old Dominion Electric Cooperative	SERC	3, 4										
6. Lindsay Shepard	Sunflower Electric Power Corporation	SPP	1										
7. Clem Cassmeyer	Western Farmers Electric Cooperative	ERCOT	1, 5										
22	Group	Janet Smith	Arizona Public Service Company										
No additional members listed.													
23	Group	Antonio Grayson	Southern Company Generation										
No additional members listed.													
24	Group	Todd Moore	Kansas City Power & Light	X		X		X	X				
1. Tim Hinken	Kansas City Power & Light	SPP	1, 3, 5, 6										
25	Individual	Brenda Frazer	Edison Mission Marketing & Trading	X				X					
26	Individual	Richard Tressler	Alber Corporation										
27	Individual	Russ Schneider	Flathead Electric Cooperative, Inc.			X	X						
28	Individual	Michael Falvo	Independent Electricity System Operator		X								
29	Individual	Joe Tarantino	Sacramento Municipal Utility District	X		X	X	X	X				
30	Individual	Michelle R D'Antuono	Ingleside Cogeneration LP					X					
31	Individual	Daniel Duff	Liberty Electric Power LLC					X					
32	Individual	Joe O'Brien	NIPSCO	X		X		X	X				
33	Individual	Cristina Papuc	TransAlta Centralia Generation LLC					X					
34	Individual	Edward Davis	Entergy Services	X		X		X	X				
35	Individual	Glen Sutton	ATCO Electric Ltd	X									
36	Individual	Thad Ness	American Electric Power	X		X		X	X				
37	Individual	Joe Petaski	Manitoba Hydro	X		X		X	X				

Group/Individual		Commenter	Organization	Registered Ballot Body Segment									
				1	2	3	4	5	6	7	8	9	10
38	Individual	Bo Jones	Westar Energy	X		X		X	X				
39	Individual	Kirit Shah	Ameren	X		X		X	X				
40	Individual	Steve Alexanderson P.E.	Central Lincoln			X	X					X	
41	Individual	Chris Searles	BAE Batteries USA										
42	Individual	Andrew Gallo	City of Austin dba Austin Energy			X	X	X	X				
43	Individual	Chris Searles	BAE Batteries USA								X		
44	Individual	Martin Bauer	US Bureau of Reclamation					X					
45	Individual	Brian J. Murphy	NextEra Energy, Inc.	X		X		X	X				
46	Individual	Patrick Brown	Essential Power, LLC					X					
47	Individual	Andrew Z. Pusztai	American Transmission Company, LLC	X									
48	Individual	Brad Harris	CenterPoint Energy	X									
49	Individual	Anthony Jablonski	ReliabitliyFirst										X
50	Individual	Keira Kazmerski	Xcel Energy	X		X		X	X				
51	Individual	Greg Rowland	Duke Energy	X		X		X	X				
52	Individual	Martin Kaufman	ExxonMobil Research and Engineering	X				X					
53	Individual	Laurie Williams	PNM Resources	X		X							
54	Individual	Mauricio Guardado	Los Angeles Department of Water and Power	X		X		X	X				
55	Individual	Wayne E. Johnson	EPRI										
56	Individual	Maggy Powell	Constellation/Exelon	X		X		X	X				

1. **In response to comments, the PSMTSDT revised Requirement R1 to state that an entity's Protection System Maintenance Program (PSMP) shall include, for each Protection System component type, an identification of the maintenance method(s) used, and the identification of the relevant monitoring attributes applied. Do you agree with this change? If you do not agree, please provide specific suggestions for improvement.**

Summary Consideration: Many commenters were in agreement with this change.

Comments were offered that the definition of PSMP is incongruous with its use in Requirement R1; the SDT disagreed, and noted that the definition of a PSMP is linked to Requirement R1 in that the entity's program shall include one or all of the parameters in the definition. Requirement R1 requires that the entity establish their program, and is the foundation for the standard.

Other comments questioned why Requirement R1 includes the applicable level of monitoring for a Component when this is also listed in the Component attributes within the tables; the SDT explained that the discussion in Requirement R1 is to assure that the monitoring is present to support the intervals and activities used.

The SDT responded to concerns regarding the use, within Requirement R1, of "Component Type" by noting that this term allows entities latitude in how they define their PSMP.

Other commenters noted that Requirement R1 does not require that entities maintain their Components; and is, therefore, administrative and should have a lower VRF. The SDT responded that Requirement R1 is the foundation of the standard; and, therefore, the VRF is appropriate.

The SDT accepted a suggestion to remove the imbedded parenthetical within Requirement R1.

Several comments were submitted that were unrelated to this question.

Organization	Yes or No	Question 1 Comment
Pacific Gas and Electric Company	Negative	PG&E thanks the drafting team for their efforts. PG&E agrees with overall changes to the standard and sees the current draft as an improvement over the prior draft, on which PG&E voted affirmative. PG&E however will vote negative on the current ballot due to recent experience and trouble with trying to implement the intercell connection resistance test for NiCad batteries as specified in Table 1-4c of PRC-005-2. PG&E has experienced trouble trying to implement the "Battery intercell or unit-to-unit connection resistance" maintenance activity for certain NiCad battery types. In

Organization	Yes or No	Question 1 Comment
		these cases the battery post was not exposed and was entirely covered by the intercell strap. The battery post protruded minimally from the battery and could not be accessed with a probe. PG&E requests clarification on this requirement and that provision be provided to accommodate existing battery systems without requiring modification to the battery system. Modification of the battery system to access the battery post places a hardship on the battery owner, may compromise the battery design, and ultimately may require replacing the battery to allow fulfilling the maintenance requirement. One solution may be to allow measuring intercell connection resistance from the battery post bolt when the battery post is not accessible. While this is not the optimal approach, it may still be effective since the presence of corrosion would likely show up between both the battery post and bolt and also between the bolt and intercell strap. Trending the resistance from bolt-to-bolt may still be effective in determining an increasing resistance from post-to-post. PG&E suggests the following language: Table 1-4c Verify - Battery intercell or unit-to-unit connection resistance where battery post is accessible. Where battery post is not accessible measure intercell or unit-to-unit connection resistance from bolt-to-bolt or nearest connection to the battery post.
Response: Thank you for your comment. The SDT believes that the Maintenance Activities in Table 1-4c are explicit as to the required activity and are necessary to ensure the integrity of the station battery. The SDT believes the activity you discuss is not an effective method to satisfy the intent of the requirement in Table 1-4c; and the team suggests that you consult the manufacturer of your battery system to investigate how to meet the requirement.		
Seminole Electric Cooperative, Inc.	Negative	Seminole recommends the SDT re-consider an interval of 12 calendar years for the component in row 2, of Table 1-5. The maximum maintenance interval for "Electromechanical lockout devices which are directly in a trip path from the protective relay to the interrupting device trip coil" should be consistent with the "Unmonitored control circuit" interval which is 12 calendar years. In order to test the lockout relays, it may be necessary to take a bus outage (due to lack of redundancy and associated stability issues with delayed clearing). Increasing the frequency of bus outages (with associated lines or transformers) will also increase the amount of time that the BES is in a less stable system configuration. Increasing the time the BES is in

Organization	Yes or No	Question 1 Comment
		a less stable system configuration also increases the probability of a low frequency, high impact event occurring. We believe that, as written, the testing of "each" trip coil and the proposed maintenance interval for lockout testing will result in the increased amount of time that the BES is in a less intact system configuration. Therefore, the Maximum Maintenance Interval should be 12 years for lockout relays. It appears that the SDT is trying to address a specific type of lockout relay with the 6 year interval that consists of a longer operating rod lockout that is subject to binding when called upon to operate. Why is it necessary to include all lockout relays when only a very specific segment of all lockout relays is subject to this one problem? Maybe a unique category of these specific types of lockouts, subject to operating rod binding should be specified at 6 years, with other lockouts not subject to this problem using a common interval like other protective components of 12 years. We sincerely hope that the SDT will consider these positive changes.
Response: Thank you for your comment. The SDT believes that electromechanical lock-out relays (86) (used to convey the tripping current to the trip coils), regardless of the manufacturer, need to be electrically operated to prove the capability of the device to change state. The application of lockouts is typically associated with equipment limited having remote backup protection (Generators/Transformers) or higher system consequences if remote backup is called upon to operate (Buses/Breakers). A failure of a lockout to function results in decreased stability and has a higher outage impact. These tests need to be accomplished at least every six years, unless PBM methodology is applied. The contacts on the 86 that change state to pass on the trip current to a breaker trip coil need only be checked every 12 years with the control circuitry.		
Tampa Electric Co.	Negative	The requirement to periodically test Control circuits will negatively impact reliability. The possibility of lifted wires being properly re-landed or test links being left open following testing will cause more misoperations than the finding of failed devices prevents. The outages required to do the testing will limit available transmission capability and therefore affect markets negatively for no reliability enhancement.
Response: Thank you for your comment. The SDT believes that periodic testing of control circuits is a vital part of assuring proper		

Organization	Yes or No	Question 1 Comment
operation of a protective relay system. There are several methods of accomplishing this testing. Where portions of the circuit are isolated for testing, procedures should be in place to assure proper restoration of the circuit.		
Tennessee Valley Authority	Negative	1. Regarding the functional test required every 3 months for "unmonitored communication systems" in Table 1-2 of the PRC-005-2 Draft. TVA feels that a Maximum Maintenance Interval for the Functional Test should be every 12 months until auto-checkback has been fully implemented by the utility. 2. The Implementation Plan for PRC-005-2 Step 4 on Page 2 states: "The Implementation Schedule set forth in this document requires that entities develop their revised Protection System Maintenance Program within twelve (12) months following applicable regulatory approvals, or in those jurisdictions where no regulatory approval is required, on the first day of the first calendar quarter twenty-four (24) months following NERC Board of Trustees adoption. This anticipates that it will take approximately twelve (12) months to achieve regulatory approvals following adoption by the NERC Board of Trustees." TVA feels that this is not sufficient time to implement full auto-checkback capability at some utilities. The time schedule of twelve (12) months should be forty-eight (48) months following applicable regulatory approvals
Response: Thank you for your comments. 1) The SDT believes the four-month interval is proper for unmonitored communications systems. The activity related to this interval is to verify basic operating status. 2) The Implementation Plan is intended to facilitate implementation of the standard, not to facilitate modifications to meet the requirements of the standard.		
U.S. Bureau of Reclamation	Negative	1. The definition for PSMP is incongruous with the use of the PSMP in Requirement R1. Requirement R1, including the Measure and VSL focus on the identification of maintenance method of the Component types and not that the PSMP is in fact being used for maintenance of the component. 2. The requirement R5 indicates the entity has to "demonstrate" efforts to correct

Organization	Yes or No	Question 1 Comment
		identified unresolved maintenance issues. The measure M5 described documentation of the efforts. The requirement language should be explicit. Does the standard want a demonstration which implies active role of the entity to prove what it is doing, or to provide documentation of the activities underway to correct deficiencies? The language in the requirement should be altered to "Each Transmission Owner, Generator Owner, and Distribution Provider shall prepare a CAP for each identified Unresolved Maintenance Issue." A second requirement is needed to require that "Each Transmission Owner, Generator Owner, and Distribution Provider shall complete its CAP to correct the identified Unresolved Maintenance Issues." The measures would need to be adjusted accordingly to reflect the CAP and evidence that the entity completed the CAP. 3. Re Terms defined for use only within PRC-005-2: The standard provides definitions which will not be incorporated into the Glossary of Terms. This would allow the definitions as used in this standard to conflict with the definition used in other standards if this practice becomes more widespread and would reduce the cohesiveness of the standard set. 4. Re The definition of Components: The standard defined what constitutes a control circuit as a component type with "Control circuitry associated with protective functions through the trip coil(s) of the circuit breakers or other interrupting devices." The standard then modified the definition by allowing "a control circuit Component is dependent upon how an entity performs and tracks the testing of the control circuitry." The definition should not be dependent upon practice. This makes the definition a fill in the blank definition. Either eliminate the allowance or remove the definition of control circuit.
Response: Thank you for your comments.		

Organization	Yes or No	Question 1 Comment
1. The SDT believes that the definition of a PSMP is linked to Requirement R1 in that the entity's program shall include one or all of the parameters in the definition. Requirement R1 requires that the entity establish their program, and is the foundation for the standard. Requirements R3-R4 address implementation of the entity's PSMP. 2. Management of completion of the identified unresolved maintenance issue is a complex topic that falls outside of the scope of this standard. There can be any number of supply, process and management problems that make setting repair deadlines impossible. The SDT specifically chose the phrase, "demonstrate efforts to correct" (with guidance from NERC Staff) because of the concern that many more complex unresolved maintenance issues might require greater than the remaining maintenance interval to resolve (and yet still be a "closed-end process"). For example, a problem might be identified on a VRLA battery during a six-month check. In instances such as one that requires battery replacement as part of the long-term resolution, it is highly unlikely that the battery could be replaced in time to meet the six-calendar-month requirement for this maintenance activity. The SDT does believe corrective actions should be timely, but concludes it would be impossible to postulate all possible remediation projects; and, therefore, impossible to specify bounding time frames for resolution of all possible unresolved maintenance issues, or what documentation might be sufficient to provide proof that effective corrective action is being undertaken. The definition of "Unresolved Maintenance Issue" has been modified to add a clarifying phrase that the deficiency, "…cannot be corrected during the maintenance interval." 3. The standard specifies that the terms used are intended for this document only; and, therefore, there should not be any conflict with their use in any other PRC standard. 4. The intent of the different means of identifying control circuitry was to accommodate various entities' philosophies on testing of these circuits. Regardless of how an entity chooses to identify their control circuitry, the entity must meet the requirements of the standard regarding maintenance of control circuitry.		
DTE Energy	No	DECo does not agree. With the exception of station batteries, all components should be tested as a scheme to assure that all components are working together as designed, so the PSMP should not be required for each component type.
Response: Thank you for your comment. A PSMP allows for each component within a protective relay scheme to have a differing maintenance interval allowing for unit or station outages. A company's PSMP can perform maintenance on all the components within a particular relay scheme, but that would require the shortest of the maintenance intervals.		
PNGC Comment Group	No	Specifying "by component type" appears confusing. It seems possible that some pieces of equipment from the same component type could end up in a different type of maintenance program. We suggest changing to "by component or component

Organization	Yes or No	Question 1 Comment
		type" when entities determine the maintenance method in their PSMP.
Response: Thank you for your comment. The SDT believes that it is acceptable for an entity to subdivide components within a component type, if desired. The SDT does not want to remove that latitude.		
Nebraska Public Power District	No	1. Since auditors will be able to request documentation necessary to validate the inclusion of the device within the appropriate level of monitoring, why does the program document require listing level of monitoring and component attributes? (Concerned about the burden of maintaining lists of components in a program document that are alike but have different levels of monitoring. Ex: Monitored and unmonitored microprocessor relays) 2. For identification of the relevant monitoring attributes applied can a single specification document suffice for similar relay types such as one document for SEL relays? 3. For trip circuit monitoring can a standard document be used for a group of similar schemes?
Response: Thank you for your comments. See Section 6.1 of the Supplementary Reference and FAQ document for a discussion of this topic. 1. The requirement to list component attributes is designed to support a company's program for the maintenance intervals used. 2. The SDT concurs with using a single specification document for similar equipment. 3. The SDT concurs with a standard document for trip circuit monitoring when consistent practices are present.		
Flathead Electric Cooperative, Inc.	No	1. Specifying "by component type" appears confusing. It seems possible that some pieces of equipment from the same component type could end up in a different type of maintenance program. We suggest changing to "by component or component type" when entities determine the maintenance method in their PSMP. 2. Generally, have concerns with all the new definitions except the NERC

Organization	Yes or No	Question 1 Comment
		definition of Protection System. The approach to creating new definitions of plain language in a standard should be avoided.
Response: Thank you for your comments. 1. The SDT believes it is acceptable for an entity to subdivide components within a component type, if desired. The SDT does not want to remove that latitude. 2. The standard specifies that the terms used are intended for this document only; and, therefore, there should not be any conflict with their use in any other PRC standard.		
American Electric Power	No	R1.1 binds you to the activities in the table, but our system is comprised of elements (such as a Plant Control Systems), that are not included in the table. As a result, it is not clear how an entity could develop an SPS that satisfies both the requirement and our system.
Response: Thank you for your comment. IEEE defines a relay as: "An electric device designed to respond to input conditions in a prescribed manner and after specified conditions are met to cause contact operation or similar abrupt change in associated electric control circuits." The SDT believes that protective relay functions that are embedded in control systems and/or SPSs are a part of this standard and are, therefore, under the same requirements as dedicated, stand-alone protective relays. It is left to the entity to determine how to align these requirements with operational concerns.		
Manitoba Hydro	No	Please see comments provided in Question 4.
US Bureau of Reclamation	No	The requirement R1 states that the PSMP must identify how the component is to be maintained, using time based or performance based or a combination. While R1 requires a PSMP, there is no measure that the PSMP is used for actually maintaining the components, other than for documenting which maintenance method is being used. The purpose of R1 is therefore administrative. Since there is no measure for the use of the PSMP, why is the entity required to develop the PSMP as defined? There is no VSL for R1 which requires that the entity establish a PSMP. Since there is no severity level associated a PSMP that does not contain one of the required activities it supports elimination of the definition of PSMP. PSMP definition is also weak and does not match with the VSL that the PSMP identify the maintenance method of the protection system component types. The definition is that PSMP

Organization	Yes or No	Question 1 Comment
		which must include: "A maintenance program for a specific component includes one or more of the following activities: o Verify- Determine that the component is functioning correctly. o Monitor - Observe the routine in-service operation of the component. o Test - Apply signals to a component to observe functional performance or output behavior, or to diagnose problems. o Inspect - Detect visible signs of component failure, reduced performance and degradation. o Calibrate- Adjust the operating threshold or measurement accuracy of a measuring element to meet the intended performance requirement." Since requirement 1 essentially only requires identification of which maintenance method is to be used, there is no need for the definition. It no longer matters how the device's functionality is determined as long as it is performed on a time based or performance based method. This approach may be lowering the reliability level associated with the protection system maintenance. Since the definition of PSMP is that only one of the 5 activities is needed, is seems that one could select to "Monitor" the in-service operation of the component on a time base and no further action is needed. So that could mean observe that the relay has power and was not misoperating every six years and maintenance is performed. A PSMP is as defined does not help the reliability. It would be better require the PSMP include as a minimum all five activities defined as well as defining the maintenance method used (time based, performance based, or a combination). There needs to be a requirement that the PSMP needs to be developed. Then Requirement 1 would be to implement the PSMP.
Response: Thank you for your comments. Requirement R1 requires that the entity establishes a PSMP (with the specified attributes), and is the foundation for the standard; thus, Requirement R1 is not administrative, as without a PSMP, there is nothing on which to base the remainder of the standard. Requirements R3-R4 address implementation of the entity's PSMP.		
ExxonMobil Research and Engineering	No	As written, the current draft of PRC-005-2 discriminates against smaller entities that do not have a population size of 60 for each component type. Historical records provide an accurate account of how specific components have performed in their installed environment. For a set population size, increasing the number of historical data points should improve the accuracy of an entity's calculated mean time between failures, so, if you increase the period over which the historical data must

Organization	Yes or No	Question 1 Comment
		be evaluated, you can compensate for a smaller segment population size. The SDT's current draft prevents smaller entities from using a larger historical data set to make up for a smaller population size when developing a performance based protective system maintenance and testing program. The SDT should reconsider allowing smaller entities to use historical records that extend for period longer than a single year in the development of a performance based program .
Response: Thank you for your comment. Small entities are permitted to aggregate their components with similar components of other entities to meet the component populations, as long as the programs are (and remain) similar – See Section 9 of the Supplementary Reference and FAQ document and the associated footnote to Attachment A. Decreasing the component population below the requirements of Attachment A will result in an unsound program due to component populations that are not statistically significant. The Supplementary Reference and FAQ document states, "Any population segment must be comprised of at least 60 individual units; if any asset owner opts for PBM but does not own 60 units to comprise a population then that asset owner may combine data from other asset owners until the needed 60 units is aggregated."		
EPRI	No	My comments are not to the point of dividing the requirements but the guidance in the PSMP tables are not technically valid for maintaining stationary battery cells. Internal ohmic measurements are related to the condition of an individual cell and not a battery bank. Also, there is not a direct correlation to ohmic measurements and battery or cell capacity. Ohmic measurements can provide an indication of a problem cell and point to a cell that should be tested. There also seems to be a misconception as to the type of capacity test that should be required. There are typically two types of tests done on batteries: service tests and performance tests. Service test are done to determine if a battery (group of cells) can meet its duty cycle whereas, a performance test is intended to test a battery against the manufacturers curve to make a determination of when the battery should be replaced. A battery could technically still meet its duty cycle but have reduced capacity. This simply means that the sizing was done properly, maintenance is timely, and there should be a timely replacement of the cells.
Response: Thank you for your comment. The drafting team agrees with statements by you and others concerning the true capacity of the station battery and relating it to internal ohmic measurements. Tables 1-4a, 1-4b and 1-4c have been modified for clarity, and		

Organization	Yes or No	Question 1 Comment
the Supplemental Reference and FAQ document has been modified to further elaborate on these concerns.		
Public Utility District No. 1 of Okanogan County	Affirmative	OCPD would like some clarification with regards to the Power Wave concept. Currently in Table 1.1 and Table 3 it states, “Voltage and/or current waveform sampling three or more times per power cycle, and conversion of samples to numeric values for measurement calculations by microprocessor electronics." OCPD feels that it might be better stated as simply 60 Hz.
Response: Thank you for your comment. The values for waveform sampling are intended to be verified by referencing a specific manufacturer’s specifications.		
ACES Power Marketing Standards Collaborators	Yes	Is the use of parentheticals within another set of parentheticals in Part 1.1 intentional? It is unusual to do this and a little confusing.
Response: Thank you for your comment. The SDT agrees with your suggestion, and made the following change: “Identify which maintenance method (time-based, performance-based per PRC-005 Attachment A, or a combination) is used to address each Protection System component type.”		
Ingleside Cogeneration LP	Yes	Ingleside Cogeneration agrees that a Compliance Authority should be alerted to those component types which have been assigned extended maintenance intervals because they use some form of monitoring. We also agree that it is appropriate that the PSMP list the relevant monitoring attributes in these cases, so they can be confirmed to be consistent with the criteria in PRC-005-2’s interval tables.
Response: Thank you for your comments.		
Northeast Power Coordinating Council	Yes	
MRO NSRF	Yes	
Tacoma Public Utilities	Yes	
Imperial Irrigation District (IID)	Yes	
Dominion	Yes	
Texas Reliability Entity	Yes	
Southwest Power Pool Standards	Yes	

Organization	Yes or No	Question 1 Comment
Development Team		
Tennessee Valley Authority	Yes	
FirstEnergy	Yes	
Western Area Power Administration	Yes	
Pepco Holdings Inc. & Affiliates	Yes	
Bonneville Power Administration	Yes	
PacifiCorp	Yes	See comments under #4.
PPL Supply NERC Registered Organizations	Yes	
MRO NSRF	Yes	
Arizona Public Service Company	Yes	
Southern Company Generation	Yes	
Kansas City Power & Light	Yes	
Edison Mission Marketing & Trading	Yes	
Alber Corporation	Yes	
Independent Electricity System Operator	Yes	
Liberty Electric Power LLC	Yes	
TransAlta Centralia Generation LLC	Yes	
Entergy Services	Yes	
ATCO Electric Ltd	Yes	
Westar Energy	Yes	
Ameren	Yes	
Central Lincoln	Yes	
BAE Batteries USA	Yes	
City of Austin dba Austin Energy	Yes	

Organization	Yes or No	Question 1 Comment
BAE Batteries USA	Yes	
Essential Power, LLC	Yes	
American Transmission Company, LLC	Yes	
CenterPoint Energy	Yes	
Xcel Energy	Yes	
Duke Energy	Yes	
PNM Resources	Yes	
Los Angeles Department of Water and Power	Yes	
Response: Thank you for your support.		

2. As a result of the changes to Requirement R1, the previous Requirement R3 was separated into three requirements:

a. Requirement R3 now requires that an entity utilizing a time-based program maintain its Protection System components in accordance with the maximum maintenance intervals listed in the tables. This change removes the compliance jeopardy associated with an entity having more stringent intervals (in its PSMP) than those listed in the tables.

b. Requirement R4 (new) requires an entity utilizing a performance-based program maintain its Protection System components in accordance with its performance-based Protection System Maintenance Program.

c. Requirement R5 (new) requires an entity to demonstrate efforts to correct identified unresolved maintenance issues. The previous language in Requirement R3 directed that an entity initiate resolution.

Do you agree with this change? If you do not agree, please provide specific suggestions for improvement.

Summary Consideration: Many commenters were in agreement with this change.

Numerous comments were offered relative to subject and definition of "Unresolved Maintenance Issues," per Requirement R5. As a result of these comments, the definition of this term was modified to include the phrase, "… cannot be corrected during the maintenance interval…" For those commenters objecting to the concept of Unresolved Maintenance Issues, the SDT explained the rationale behind the concept.

Several comments were submitted that were unrelated to this question.

Organization	Yes or No	Question 2 Comment
Beaches Energy Services	Negative	The applicability of the standard should be modified to reflect the FERC approved interpretation PRC-005-1b Appendix 1 that basically says that applicable Protection Systems are those that protect a BES Element AND trip a BES Element. The interpretation states: The applicability as currently stated will sweep in distribution protection: "4.2.1 Protection Systems that are installed for the purpose of detecting Faults on BES Elements (lines, buses, transformers, etc.)" Many (most) network distribution systems that have more than one source into a distribution network will have reverse power relays to detect faults on the BES

Organization	Yes or No	Question 2 Comment
		and trip the step-down transformer to prevent feedback from the distribution to the fault on the BES. This is not a BES reliability issue, but more of a safety issue and distribution voltage issue. These relays would be subject to the standard as the applicability is currently written, but, should not be and they are currently not within the scope of PRC-005-1b Appendix 1 because the step-down transformer (non-BES) is tripped and not a BES Element (hence, the "and" condition of the interpretation is not met). There are many other related examples of distribution that might be networked or have distributed generation on a distribution circuit where such reverse power relays, or overcurrent relays with low pick-ups, are used for safety and distribution voltage control reasons and are not there for BES Reliability. To make matters worse, for these Reverse Power relays, it is pretty much impossible to meet PRC-023 because the intent of the relay is to make current flow unidirectional (e.g., only towards the distribution system) without regard for the rating of the elements feeding the distribution network. So, if these relays are swept in, and if they are on elements > 200 kV, then the entity would not be able to meet PRC-023 as that standard is currently written. So, the SDT should adopt the FERC approved interpretation.

Response: Thank you for your comment. The SDT believes that the Applicability, as stated in PRC-005-2, is correct and supports the reliability of the BES. The SDT observes that the approved Interpretation addresses the term, “transmission Protection System,” and notes that this term is not used within PRC-005-2; thus the interpretation does not apply to PRC-005-2. PRC-005-2 specifically addresses Protection Systems that are installed for the purpose of detecting Faults on BES Elements.

To address your concern, the distribution protective devices and functions cited in this comment are not “installed for the purpose of detecting Faults on BES Elements” and would, therefore, not be subject to PRC-005-2. A relay used primarily for “safety and distribution voltage control reasons” is clearly not “installed for the purpose of detecting Faults on BES Elements.” The reverse power relay application described is also not “installed for the purpose of detecting Faults on BES Elements,” (the relays react to changes in power flow direction, which may or may not be due to a Fault) but for the purpose of preventing feedback from the distribution system to the transmission system.

Please see the PRC-005-2 Supplementary Reference and FAQ, Section 2.3, for a more detailed discussion of this issue.

Organization	Yes or No	Question 2 Comment
Fort Pierce Utilities Authority	Negative	1. The applicability of the standard should be modified to reflect the FERC approved interpretation PRC-005-1b Appendix 1 that basically says that applicable Protection Systems are those that protect a BES Element AND trip a BES Element. The applicability as currently stated will sweep in distribution protection: “4.2.1 Protection Systems that are installed for the purpose of detecting Faults on BES Elements (lines, buses, transformers, etc.).” Most network distribution systems that have more than one source into a distribution network will have reverse power relays to detect faults on the BES and trip the step-down transformer to prevent feedback from the distribution to the fault on the BES. This is not a BES reliability issue, but more of a safety and distribution voltage issue. These relays would be subject to the standard as the applicability is currently written, but, should not be and they are currently not within the scope of PRC-005-1b Appendix 1 because the step-down transformer (non-BES) is tripped and not a BES Element (hence, the "and" condition of the interpretation is not met). 2. There are many other related examples of distribution that might be networked or have distributed generation on a distribution circuit where such reverse power relays, or overcurrent relays with low pick-ups, are used for safety and distribution voltage control reasons and are not there for BES Reliability. To make matters worse, for these Reverse Power relays, it is pretty much impossible to meet PRC-023 because the intent of the relay is to make current flow unidirectional (e.g., only towards the distribution system) without regard for the rating of the elements feeding the distribution network. So, if these relays are swept in, and if they are on elements > 200

Organization	Yes or No	Question 2 Comment
		kV, then the entity would not be able to meet PRC-023 as that standard is currently written. FPUA recommends the SDT should adopt the FERC approved interpretation. 3. Another concern is regarding the sudden pressure relays. These had been out of the scope in all previous draft versions of PRC-005-2 because these do not measure electrical quantities. However, the SDT just added a requirement to test the trip path from the sudden pressure device, arguing that it is captured by the definition of Protection Systems. This inconsistency does not make sense and could create "grey areas" for other devices that can trip for low oil level or high temperature, among others. By their nature, sudden pressure devices are far less reliable than their associated control circuitry. I know of at least one large entity that disables sudden pressure relays on smaller transformers to cut down on nuisance alarms. If it is expected that non-electrically initiated devices may become part of some maintenance standard in the future, I think it would be premature for the SDT to address sudden pressure relays in PRC-005-2. 4. And lastly, page 77 of the Supplementary Reference has some text clarifying the requirement for establishing a baseline test: "For all new installations of Valve-Regulated Lead-Acid (VRLA) batteries and Vented Lead-Acid (VLA) batteries, where trending of the cells internal ohmic measurements to a baseline are to be used to determine the ability of the station battery to perform as designed, the establishment of the baseline as described above should be followed at the time of installation to insure the most accurate trending of the cell/unit." This guidance does not recognize the fact that

Organization	Yes or No	Question 2 Comment
		some battery manufacturers recommend the baseline tests to be performed at some point in time after the install to allow the cell chemistry to stabilize after the initial freshening charge. The manual from a battery manufacturer (Enersys Powersafe) states that "The initial records are those readings taken after the battery has been in regular float service for 3 months (90 days). These should include the battery terminal float voltage and specific gravity reading of each cell corrected to 77F (25C), all cell voltages, the electrolyte level, temperature of one cell on each row of each rack, and cell-to-cell and terminal connection detail resistance readings. It is important that these readings be retained for future comparison". If an entity follows the manufacturer's recommendation, the above statements would lead an auditor to a finding of non-compliance because internal ohmic tests were not performed prior to placing a new battery string in service. A simple modification to the wording would eliminate the conflict.

Response: Thank you for your comments.

1. The SDT believes that the Applicability, as stated in PRC-005-2, is correct and supports the reliability of the BES. The SDT observes that the approved Interpretation addresses the term, "transmission Protection System," and notes that this term is not used within PRC-005-2; thus, the interpretation does not apply to PRC-005-2. PRC-005-2 specifically addresses Protection Systems that are installed for the purpose of detecting Faults on BES Elements.
2. To address your concern, the distribution protective devices and functions cited in this comment are not "installed for the purpose of detecting Faults on BES Elements" and would, therefore, not be subject to PRC-005-2. A relay used primarily for "safety and distribution voltage control reasons" is clearly not "installed for the purpose of detecting Faults on BES Elements." The reverse power relay application described is also not "installed for the purpose of detecting Faults on BES Elements," (the relays react to changes in power flow direction, which may or may not be due to a Fault) but for the purpose of preventing feedback from the distribution system to the transmission system.

Organization	Yes or No	Question 2 Comment
Please see the PRC-005-2 Supplementary Reference and FAQ, Section 2.3, for a more detailed discussion of this issue. 3. DC trip circuit from a sudden pressure relay output to the trip coil of the interrupting device has always been included in the "Control circuitry" portion of a Protection System, and is discussed in Section 15.3 of the PRC-005-2 Supplementary Reference and FAQ document. In regards to including sudden pressure relays themselves, FERC, in Order 758, recently directed NERC to submit an informational filing providing a schedule for addressing sudden pressure relays in PRC-005. The NERC System Protection and Control Subcommittee (SPCS) worked with NERC staff to develop the informational filing, which was filed with FERC on April 12, 2012. Activities associated with the schedule submitted in the filing will be included in a final SAR to further develop PRC-005. A draft SAR for a second phase of this project is posted for information only at this time. **4.** The drafting team revised the Supplemental Reference and FAQ document based on your recommendations.		
Imperial Irrigation District (IID)	No	IID disagree with item c. and does not believe item c increases the reliability of the BES. The maintenance issues will be resolved internally and should not be required as per compliance of the standard.
Response: Thank you for your comment. The practice of returning Protection System devices to good working order exists currently as a required element of a sound maintenance program as required by the existing Protection System maintenance and testing standard, PRC-005-1b. For reference, NERC Compliance Application Notice CAN-0043 (Posted Final 12/30/2011) directs Compliance Enforcement Authorities (CEAs) to "…look for relay test results or field records with annotations such as "as-found" readings or pass/fail results; if failed, then adjustments made. The maintenance record for adjustments may be requested".		
Texas Reliability Entity	No	New requirement R5 states that an entity shall "demonstrate efforts" to correct identified Unresolved Maintenance Issues. This falls short of requiring completion of any corrective actions for the unresolved maintenance issue. We suggest rewording to "Each Transmission Owner, Generator Owner, and Distribution Provider shall develop a corrective action plan and work timetable to address identified Unresolved Maintenance Issues. The Registered Entity shall complete resolution of Unresolved Maintenance Issues within the time frame identified in the Entity corrective action plan." If R5 is modified, then M5 and the VSL should also be modified accordingly.
Response: Thank you for your comment.		

Organization	Yes or No	Question 2 Comment
Management of completion of the identified unresolved maintenance issue is a complex topic that falls outside of the scope of this standard. There can be any number of supply, process and management problems that make setting repair deadlines impossible. The SDT specifically chose the phrase, "demonstrate efforts to correct" (with guidance from NERC Staff) because of the concern that many more complex unresolved maintenance issues might require greater than the remaining maintenance interval to resolve (and yet still be a "closed-end process"). For example, a problem might be identified on a VRLA battery during a six-month check. In instances such as one that requires battery replacement as part of the long term resolution, it is highly unlikely that the battery could be replaced in time to meet the six-calendar-month requirement for this maintenance activity. The SDT believes corrective actions should be timely, but concludes it would be impossible to postulate all possible remediation projects; and, therefore, impossible to specify bounding time frames for resolution of all possible unresolved maintenance issues, or what documentation might be sufficient to provide proof that effective corrective action is being undertaken. The definition of "unresolved maintenance issue" has been modified to add a clarifying phrase that the deficiency "cannot be corrected during the maintenance interval."		
Nebraska Public Power District	No	The FAQ attempts to clarify the intent of "demonstrate efforts to correct", however, there is no explanation as to why this new term is preferable to the more concise "initiate resolution" term that was developed and agreed upon over the last year. In the Supplementary Reference and FAQ document there is a request for clarification and it is reprinted below. Please clarify what is meant by "...demonstrate efforts to correct an unresolved maintenance issue..."; why not measure the completion of the corrective action? Management of completion of the identified unresolved maintenance issue is a complex topic that falls outside of the scope of this standard. There can be any number of supply, process and management problems that make setting repair deadlines impossible. The SDT specifically chose the phrase "demonstrate efforts to correct" (with guidance from NERC Staff) because of the concern that many more complex unresolved maintenance issues might require greater than the remaining maintenance interval to resolve (and yet still be a "closed-end process"). For example, a problem might be identified on a VRLA battery during a 6 month check. In instances such as one that requiring battery replacement as part of the long term resolution, it is highly unlikely that the battery could be replaced in time to meet the 6 calendar month requirement for this maintenance activity. The SDT does not believe entities should be found in violation of a maintenance program

Organization	Yes or No	Question 2 Comment
		requirement because of the inability to complete a remediation program within the original maintenance interval. The SDT does believe corrective actions should be timely but concludes it would be impossible to postulate all possible remediation projects and therefore, impossible to specify bounding time frames for resolution of all possible unresolved maintenance issues or what documentation might be sufficient to provide proof that effective corrective action is being undertaken. I agree with this response and specifically the last sentence. This indicates that R5 "demonstrating efforts to correct unresolved issues" is too open ended and subjective and cannot be applied by enforcement in a consistent way. R5 should be removed from the standard.
Response: Thank you for your comment. Management of completion of the identified unresolved maintenance issue is a complex topic that falls outside of the scope of this standard. There can be any number of supply, process and management problems that make setting repair deadlines impossible. The SDT specifically chose the phrase, "demonstrate efforts to correct" (with guidance from NERC Staff) because of the concern that many more complex unresolved maintenance issues might require greater than the remaining maintenance interval to resolve (and yet still be a "closed-end process"). For example, a problem might be identified on a VRLA battery during a six-month check. In instances such as one that requires battery replacement as part of the long term resolution, it is highly unlikely that the battery could be replaced in time to meet the six-calendar-month requirement for this maintenance activity. The SDT believes corrective actions should be timely, but concludes it would be impossible to postulate all possible remediation projects; and, therefore, impossible to specify bounding time frames for resolution of all possible unresolved maintenance issues, or what documentation might be sufficient to provide proof that effective corrective action is being undertaken. The definition of "unresolved maintenance issue" has been modified to add a clarifying phrase that the deficiency "cannot be corrected during the maintenance interval."		
Bonneville Power Administration	No	BPA believes that R5 is not worded in such a way that it can be easily or consistently audited.
Response: Thank you for your comment. Management of completion of the identified unresolved maintenance issue is a complex topic that falls outside of the scope of this standard. There can be any number of supply, process and management problems that make setting repair deadlines impossible. The SDT specifically chose the phrase "demonstrate efforts to correct" (with guidance from NERC Staff) because of the concern that many more complex unresolved maintenance issues might require greater than the remaining maintenance interval to resolve (and		

Organization	Yes or No	Question 2 Comment
yet still be a "closed-end process"). For example, a problem might be identified on a VRLA battery during a six-month check. In instances such as one that requires battery replacement as part of the long term resolution, it is highly unlikely that the battery could be replaced in time to meet the six-calendar-month requirement for this maintenance activity. The SDT believes corrective actions should be timely but concludes it would be impossible to postulate all possible remediation projects; and, therefore, impossible to specify bounding time frames for resolution of all possible unresolved maintenance issues, or what documentation might be sufficient to provide proof that effective corrective action is being undertaken. The definition of "Unresolved Maintenance Issue" has been modified to add a clarifying phrase that the deficiency "cannot be corrected during the maintenance interval." Each entity must determine how to document the efforts to correct the Unresolved Maintenance Issue based on the specific issue and choice of remediation.		
PPL Supply NERC Registered Organizations	No	1. The maximum maintenance intervals in PRC-005-2 of 4 calendar months and 18 calendar months are not compatible with computerized maintenance-planning programs based on periodicity rather than elapsed time from the previous check. This situation could be addressed in a conservative fashion by performing work quarterly instead of at 4-month intervals, and annually in place of 18-month periods, which also provides often-needed flexibility as to scheduling the tasks. Inspections performed in April for Q2 and September for Q3 would not meet NERC's 4 calendar month criterion, however, and a similar problem exists for annual checks. The more-stringent compliance jeopardy cited above has therefore not been fully addressed. We recommend changing the 4 calendar months and 18 calendar months intervals to quarterly and annually respectively. 2. We consider addition of the expression, "causes the component to not meet the intended performance," to the previous draft's definition of Unresolved Maintenance Issues (UMIs) to constitute a step backwards, because of the unavoidable subjectivity involved in deciding whether or not a battery or other protection system device is unable to perform as intended. A battery with some "sparkle" on the plates due to sulfation would still be able to

Organization	Yes or No	Question 2 Comment
		perform adequately, for example, making this an issue to watch but not an UMI. It is impractical to provide strict, quantitative, UMI-threshold performance limits for every piece of equipment in a Protection System and every situation that may arise, however. The concept of an UMI has some appeal from a common-sense point of view; but as a regulation it is impractical and, given the breadth of the topic at hand, is likely to remain so regardless of alternative phrasing that might be attempted.
Response: Thank you for your comment. 1. The SDT believes that management issues associated with computerized maintenance management programs can be adapted to provide maintenance triggers consistent with the intervals established in the tables. Many of these systems offer the ability for the user to create custom algorithms to trigger the desired work order, reminder, or alarm, etc. The SDT also believes the four calendar-month and 18-calendar-month intervals are appropriate for the relative Protection System components. An entity may utilize the abbreviated intervals, such as you suggest, as long as they meet the explicit requirements and intervals established in the standard. 2. The consideration of "meet the intended performance" is an issue for an entity to determine subjectively. This consideration depends heavily upon the nature of observed anomaly and upon the actual intended performance.		
Arizona Public Service Company	No	The standard does not provide basis for the enumerated "maximum allowable interval that is appropriate to the type of the protection system and its impact on the reliability of the Bulk-Power System." An example of such an approach is the Standard Technical Specifications in use by the nuclear power industry; e.g., NUREG 1432, volume 2. While we are supportive of the changes the SDT has made, APS is concerned the draft Standard will not give entities the flexibility to continue to improve reliability based on changing industry norms and best practices. When technology changes for the better, industry will need the flexibility to optimize use of the new technology while still maintaining an appropriate level of reliability. Lack of defined bases for intervals will prevent technically sound revision to maintenance practices.

Organization	Yes or No	Question 2 Comment
Response: Thank you for your comment. The SDT established the maximum maintenance intervals for each Protection System component subject to the standard based upon research performed by the NERC System Protection and Control Subcommittee and "best practice" input from industry. The base intervals are extended in consideration of modern monitoring capabilities and new technologies. These extended intervals range from "12 calendar years" to "No periodic maintenance specified." Consistent with the FERC directive of intervals being "…appropriate to the type of protection system and its impact on the reliability of the Bulk Power System," the SDT did not provide a "No periodic maintenance specified" extended interval for high reliability impact devices, such as protective relays; but rather stipulates a six-calendar-year interval for unmonitored electromechanical and unmonitored microprocessor relays, and a 12-calendar-year verification of monitored microprocessor relays. Please see Section 8.3 of the Supplementary Reference and FAQ document for a more detailed discussion of this issue.		
Southern Company Generation	No	1. The change made to R3 was a good move. Entities should be allowed the flexibility to build grace periods into their maintenance programs to assist them in meeting common national standards for maintenance activities and intervals. 2. If possible, elimination of all possible uncertainty in the auditability of requirement R5 is desired. We prefer eliminating this requirement R5 altogether to the proposed draft that includes a requirement to demonstrate efforts to correct identified unresolved maintenance issues.
Response: 1. Thank you for your comment and support. 2. Returning Protection System devices to good working order exists currently as a required element of a sound maintenance program subject to the existing Protection System Maintenance and Testing Standard, PRC-005-1b. For reference, NERC Compliance Application Notice CAN-0043 (Posted Final 12/30/2011) directs Compliance Enforcement Authorities (CEAs) to "…look for relay test results or field records with annotations such as "as-found" readings or pass/fail results; if failed, then adjustments made. The maintenance record for adjustments may be requested". Management of completion of the identified unresolved maintenance issue is a complex topic that falls outside of the scope of		

Organization	Yes or No	Question 2 Comment
this standard. There can be any number of supply, process and management problems that make setting repair deadlines impossible. The SDT specifically chose the phrase "demonstrate efforts to correct" (with guidance from NERC Staff) because of the concern that many more complex unresolved maintenance issues might require greater than the remaining maintenance interval to resolve (and yet still be a "closed-end process"). For example, a problem might be identified on a VRLA battery during a six-month check. In instances such as one that requires battery replacement as part of the long-term resolution, it is highly unlikely that the battery could be replaced in time to meet the six-calendar-month requirement for this maintenance activity. The SDT believes corrective actions should be timely, but concludes it would be impossible to postulate all possible remediation projects; and, therefore, impossible to specify bounding time frames for resolution of all possible unresolved maintenance issues or what documentation might be sufficient to provide proof that effective corrective action is being undertaken. The definition of "unresolved maintenance issue" has been modified to add a clarifying phrase that the deficiency "cannot be corrected during the maintenance interval."		
Ingleside Cogeneration LP	No	1. Ingleside Cogeneration LP strongly agrees with the change made to the language in R1 and R3 specifying that compliance is measured against the PRC-005-2's interval tables wherever time-based methods are used. The intervals were carefully designed to assure an acceptable level of BES reliability, and the regulatory authorities must be prepared to stand by them. Furthermore, a Registered Entity who may establish tighter intervals for their own internal purposes should be encouraged to do so - and without a threat of a violation hanging over their heads. 2. We also agree with the need to add a new requirement (R4) which applies to those entities that choose to use a performance-based system to determine some of their maintenance intervals. It logically maps back to requirement R2 which states that the calculated intervals must be documented in the PSMP. 3. We cannot agree with the language used in R5, which, in its previous form under R3, had specified only that the Protection System owner "initiate

Organization	Yes or No	Question 2 Comment
		resolution" to correct identified unresolved maintenance issues. We were actually comfortable with this language as it was unambiguous that progress did not need to be tracked start-to-finish. We would like to propose adding a phrase that tracks the statement in M5; which we find acceptable. This would result in the following: R5. Each Transmission Owner, Generator Owner, and Distribution Provider shall demonstrate THAT IT HAS UNDERTAKEN <our emphasis> efforts to correct identified Unresolved Maintenance Issues.
Response: 1. Thank you for your comment and support. 2. Thank you for your comment and support. 3. The SDT believes corrective actions should be timely, but concludes it would be impossible to postulate all possible remediation projects; and, therefore, impossible to specify bounding time frames for resolution of all possible unresolved maintenance issues or what documentation might be sufficient to provide proof that effective corrective action is being undertaken. For the Compliance Monitoring Authority to be confident that the corrective action is being implemented, the entity should expect to demonstrate progress toward correcting the Unresolved Maintenance Issue, such as the evidence suggested in Measure M5 (with additional suggested evidence added).		
American Electric Power	No	1. R3: Table 1-5 notes a "mitigating device" as part of component attributes. Such a phrase could be open to interpretation and needs to be clearly defined. 2. Table 1-3, Maintenance Activities - there is nothing specifically regarding accuracy. Suggest incorporating the definition of "verify" as used in the FAQ or perhaps something similar to "verify values are as expected". 3. R5: We understand the drafting team's desire to deal with unresolved maintenance issues, however it is not clear how the adequacy of resolving

Organization	Yes or No	Question 2 Comment
		those issues would be determined by an auditor. If these kinds of efforts are going to be scrutinized, there needs to be some sort of boundaries established so that it is clear how unresolved maintenance issues would be evaluated.
Response: Thank you for your comment. 1. The SDT intended that "mitigating devices" address actions of SPSs, which may include activities beyond tripping of interrupting devices. For example, SPSs may perform actions like generation run-back or generation fast-valving. 2. 'Verify" is a term expressed in the PSMP definition, and the use of the term in Table 1-3 indicates that the accuracy needs to be 'whatever is necessary' for proper functioning of the connected relays. 3. There can be any number of supply, process and management problems that make setting repair deadlines impossible. The SDT believes corrective actions should be timely, but concludes it would be impossible to postulate all possible remediation projects; and, therefore, impossible to specify bounding time frames for resolution of all possible unresolved maintenance issues. Measure M5 suggests some examples of evidence.		
US Bureau of Reclamation	No	The Requirement R5 indicates the entity has to "demonstrate" efforts to correct identified unresolved maintenance issues. The measure M5 described documentation of the efforts. The requirement language should be explicit. Does the standard want a demonstration which implies active role of the entity to prove what it is doing, or to provide documentation of the activities underway to correct deficiencies? The language in the requirement should be altered to "Each Transmission Owner, Generator Owner, and Distribution Provider shall prepare a CAP for each identified Unresolved Maintenance Issue." A second requirement is needed to require that "Each Transmission Owner, Generator Owner, and Distribution Provider shall complete its CAP to correct the identified Unresolved Maintenance Issues." The measures would need to be adjusted accordingly to reflect the CAP and evidence that the entity completed the CAP.
Response: Thank you for your comment. The term within Requirement R5, "… demonstrate efforts …" is intended for both – that the entities are acting to correct the deficiency and also (to prove compliance) maintaining documentation of the activities underway to		

Organization	Yes or No	Question 2 Comment
correct the deficiency. The SDT elected to not require a "**Corrective Action Plan**" as defined in the NERC Glossary of Terms to avoid much of the systemic, ongoing documentation attendant to that term. However, if an entity wishes to use a Corrective Action Plan as defined, that would be an acceptable method of meeting Requirement R5.		
Essential Power, LLC	No	The change to R3 is too restrictive, and removes the registered entity's ability to better define its own intervals based on its own experience and system characteristics. The comments regarding a CEA's enforcement of an RE's more stringent internal intervals is not indicative of an issue with the Requirement, but with the way in which it is enforced.
Response: Thank you for your comment. Requirement R3 still allows entities flexibility within their own Protection System Maintenance and Testing Program (PSMP), and only restricts an entity's establishment of intervals that are greater than those specified in the tables. For example, an entity may choose to establish, in its own PSMP, testing of a specific type or model of electromechanical relay more frequently than the six-calendar-year interval specified in Table 1-1 of PRC-005-2. However, should some issue come up that affects the entity's ability to complete testing of those devices within their programs established interval, but they are able complete the testing within the maximum maintenance interval provided by the standard, the standard explicitly establishes that they will not be found non-compliant for missing their own, more stringent interval.		
Xcel Energy	No	We agree with the changes to R3 and the new R4 requirement but disagree with the wording change in the new R5 requirement. The difference between "initiate resolution" and "demonstrate efforts to correct identified unresolved maintenance issues" is very unclear. Please clarify the SDT's intent with this subtle wording change. In our opinion, it would be fairly obvious if an entity met a requirement to "initiate resolution" and, thus, this would be easily measurable requirement. It seems that the phrase "demonstrate efforts to correct identified unresolved maintenance issues" will be open to more auditor judgment as to what constitutes adequate efforts to correct a deficiency and thus makes the measurement of meeting this requirement far more arbitrary. If this is not the intent, then why bother with the wording change? Furthermore, CEAs should realize that entities already have strong financial incentives in correcting identified unresolved maintenance issues to minimize the risk of costly equipment damage or equally costly outages of critical equipment. Delays in correcting identified

Organization	Yes or No	Question 2 Comment
		unresolved maintenance issues are seldom driven by cost avoidance and are more likely driven by the time it takes to develop, engineer and/or procure a better solution to a problem. Prompt band-aid type fixes are not necessarily desirable fixes and the wording of R5 should not promote the band-aid approach to the correction of a problem.
Response: Thank you for your comment and your support on Requirements R3 and R4. Requirement R5 is expressly focused on allowing entities to resolve deficiencies in an effective manner, rather than performing "band-aid" fixes. Management of completion of the identified unresolved maintenance issue is a complex topic that falls outside the scope of this standard. There can be any number of supply, process and management problems that make setting repair deadlines impossible. The SDT specifically chose the phrase "demonstrate efforts to correct" (with guidance from NERC Staff) because of the recognition that more complex unresolved maintenance issues could require more time to resolve effectively than there is time remaining in the maintenance interval, yet the problems must eventually be resolved. The SDT believes that corrective actions should be timely, but concludes it would be impossible to postulate all possible remediation projects; and, therefore, impossible to specify bounding time frames for resolution of all possible unresolved maintenance issues, or what documentation might be sufficient to provide proof that effective corrective action is being undertaken. The definition of "unresolved maintenance issue" has been modified to add a clarifying phrase that the deficiency "cannot be corrected during the maintenance interval."		
ExxonMobil Research and Engineering	No	As written, the current draft of PRC-005-2 discriminates against smaller entities that do not have a population size of 60 for each component type. Historical records provide an accurate account of how specific components have performed in their installed environment. For a set population size, increasing the number of historical data points should improve the accuracy of an entity's calculated mean time between failures, so, if you increase the period over which the historical data must be evaluated, you can compensate for a smaller segment population size. The SDT's current draft prevents smaller entities from using a larger historical data set to make up for a smaller population size when developing a performance based protective system maintenance and testing program. The SDT should reconsider allowing smaller entities to use historical records that extend for period longer than a single year in the development of a performance based program.

Organization	Yes or No	Question 2 Comment
Response: Thank you for your comment. Small entities are permitted to aggregate their components with similar components of other entities to meet the component populations, as long as the programs are (and remain) similar – See Section 9 of the Supplementary Reference and FAQ document and the associated footnote to Attachment A. Decreasing the component population below the requirements of Attachment A will result in an unsound program due to component populations that are not statistically significant. The Supplementary Reference and FAQ document states, "Any population segment must be comprised of at least 60 individual units; if any asset owner opts for PBM but does not own 60 units to comprise a population then that asset owner may combine data from other asset owners until the needed 60 units is aggregated." Historical data may be good for trending, but may not be suitable for judging current maintenance program effectiveness.		
EPRI	No	See comments in question 1
Constellation/Exelon	No	While we are fine with the structural change to separate the requirements out further, we have concerns with the content of the requirements. R5/M5 • M5 needs further clarity to reflect the intended compliance obligation for R5. In previous comments, Constellation expressed concern that compliance obligation for R5 implied a greater level of completion in attending to an identified "deficiency." We pointed out that the severity of the "deficiency" found will dictate the method and timing of a "follow up correction action". In response to the comment, the SDT stated that "PRC-005-2 only requires the entity "... initiate resolution" of the issue found." The SDT revision of R5 and M5 is an improvement; however, changes to M5 are needs to clarify that efforts to correct do not require demonstration that those efforts have concluded. • A revision to the language will clarify the SDT intent. Please consider use of the following language: R5. Each Transmission Owner, Generator Owner, and Distribution Provider shall correct or initiate resolution of identified Unresolved Maintenance Issues. [Violation Risk Factor: Medium] [Time Horizon: Operations Planning] M5. Each Transmission

Organization	Yes or No	Question 2 Comment
		Owner, Generator Owner, and Distribution Provider shall have evidence that it has initiated resolution of, or corrected, identified Unresolved Maintenance Issues in accordance with Requirement R5. The evidence for initiated resolution may include but is not limited to work orders for future resolution, project schedules for future resolution, or other documentation of future plans. The evidence for corrected Unresolved Maintenance Issues may include but is not limited to replacement Component orders, invoices, return material authorizations (RMAs) or purchase orders.
Response: Thank you for your comment. The SDT specifically chose the phrase "demonstrate efforts to correct" (with guidance from NERC Staff) because of the recognition that more complex unresolved maintenance issues could require more time to resolve effectively than there is time remaining in the maintenance interval, yet the problems must eventually be resolved. Measure M5 has been modified to include "project schedules with completed milestones."		
Northeast Power Coordinating Council	Yes	
DTE Energy	Yes	
MRO NSRF	Yes	
Tacoma Public Utilities	Yes	
Dominion	Yes	1. Dominion understands R3 to mean that the time-based maintenance interval can be less that but not exceed the maximum maintenance intervals in the tables. But that compliance will be based upon the maximum interval. Please confirm that our understanding is correct. 2. Dominion believes the intent of the footnote in Table 1-1 is to 'start the interval' on either the 1st day of a calendar year or calendar month. We also believe this will require any entity whose current intervals are based on annual or monthly will have to adjust their intervals to calendar as they

Organization	Yes or No	Question 2 Comment
		transition to PRC-005-2. Please confirm our understanding is correct. 3. We also believe this transition could result in the compliance interval measurement being shorter or longer than it would have been if PRC-005-2 had not been approved. If this is incorrect, please provide examples to provide clarity.
Response: Thank you for your comment. 1. Yes, your understanding of Requirement R3 is correct. 2. No, your understanding of Footnote 1 at the bottom of the page where Table 1-1 appears in the standard is not correct. The intent of Footnote 1 is to clarify, or define the terms "calendar year" and "calendar month" as they relate to the period in which the next maintenance activity for a particular interval must occur. For example, if an entity performed electromechanical relay testing at Substation A in April of 2010, in accordance with the maximum maintenance interval of six-calendar-years established in Table 1-1, the entity must perform the next round of electromechanical relay testing at Substation A sometime during the calendar-year period beginning January 1, 2016. Please see Section 7.1 of the Supplementary Reference and FAQ document for a more detailed discussion of this issue. 3. If an entity's maintenance program specifies a maintenance activity occur "30 days" from the previous activity's performance, it would be possible that a transition to a "calendar month" interval would allow the first performance of the activity after the transition to occur sooner or later than the 30 days previously specified. However, many existing maintenance programs that establish performance of an activity "annually" or "monthly" should not require more than adjusting the language in the program. For instance, if an entity's current program is to inspect substations "monthly," they are likely performing those inspections sometime during each calendar month. This practice would be no different with the interval redefined as: "once each calendar month."		
PNGC Comment Group	Yes	The PNGC comment group agrees with this change. Removing the jeopardy associated with more stringent intervals will make it less risky for entities to tighten intervals in their PSMP.
Response: Thank you for your comment and support.		

Organization	Yes or No	Question 2 Comment
ACES Power Marketing Standards Collaborators	Yes	1. We agree the changes will benefit reliability by allowing a registered entity to have shorter maintenance cycles without the potential for compliance violations associated with missing their shorter maintenance cycle. 2. Requirement R5 should be modified to focus on what is to be accomplished. As it is written now, the requirement is essentially focused on compliance by using "shall demonstrate efforts". Compliance is about demonstrating or presenting evidence that the requirement has been met. The purpose of the requirement is to correct Unresolved Maintenance issues. We suggest changing the wording to: "shall initiate resolution of Unresolved Maintenance Issues."
Response: 1. Thank you for your comment and support of this change. **2.** Management of completion of the identified unresolved maintenance issue is a complex topic that falls outside the scope of this standard. There can be any number of supply, process and management problems that make setting repair deadlines impossible. The SDT specifically chose the phrase "demonstrate efforts to correct" (with guidance from NERC Staff) because of the recognition that more complex unresolved maintenance issues could require more time to resolve effectively than there is time remaining in the maintenance interval, yet the problems must eventually be resolved. The SDT believes that corrective actions should be timely, but concludes it would be impossible to postulate all possible remediation projects; and, therefore, impossible to specify bounding time frames for resolution of all possible unresolved maintenance issues, or what documentation might be sufficient to provide proof that effective corrective action is being undertaken. The definition of "unresolved maintenance issue" has been modified to add a clarifying phrase that the deficiency "cannot be corrected during the maintenance interval."		
Liberty Electric Power LLC	Yes	Thank you for the change in Requirement 3. This standard now gives clear direction to entities, removes the burden of "created paperwork" intended only for the use of auditors, and removes the compliance jeopardy for holding a program to a higher standard than required.

Organization	Yes or No	Question 2 Comment
Response: Thank you for your comment and support.		
TransAlta Centralia Generation LLC	Yes	More detail explanation or examples of Efforts on R5 is required
Response: Thank you for your comment. There can be any number of supply, process and management problems that make setting repair deadlines impossible. The SDT specifically chose the phrase "demonstrate efforts to correct" (with guidance from NERC Staff) because of the recognition that more complex unresolved maintenance issues could require more time to resolve effectively than there is time remaining in the maintenance interval, yet the problems must eventually be resolved. The SDT believes that corrective actions should be timely but concludes it would be impossible to postulate all possible remediation projects; and, therefore, impossible to specify bounding time frames for resolution of all possible unresolved maintenance issues, or what documentation might be sufficient to provide proof that effective corrective action is being undertaken. The definition of "unresolved maintenance issue" has been modified to add a clarifying phrase that the deficiency "cannot be corrected during the maintenance interval." See the Supplementary Reference and FAQ document Section 4.1 for additional discussion.		
Central Lincoln		1. We thank the SDT for removing the extra compliance jeopardy associated with stringent intervals. The extra jeopardy never made sense to us, since it could result in sanctions to one entity and no sanctions to another entity when both followed the same interval with no BES risk presented by either. 2. We are concerned regarding the language of R5. We understand that maintenance without resolution is worthless, but the language here is subjective allowing different auditors to reach differing conclusions whether a sufficiently documented effort has been made. We also note that entities are expected to be continually in compliance with applicable standards, and are expected to self report when they are not. Strictly interpreted, an entity is out of compliance with R5 if there is any time lag between the moment the problem is identified in the field and documentation is produced of an effort taken to resolve it. We suggest the inclusion of a reasonable time limit.

Organization	Yes or No	Question 2 Comment
Response: 1. Thank you for your comment and support. **2.** The definition of "Unresolved Maintenance Issue" has been modified to add a clarifying phrase that the deficiency "cannot be corrected during the maintenance interval," which allows the entity until the end of the maintenance interval to develop an approach for correcting the problem. See the Supplementary Reference and FAQ document Section 4.1 for additional discussion.		
Southwest Power Pool Standards Development Team	Yes	
Tennessee Valley Authority	Yes	
FirstEnergy	Yes	
Western Area Power Administration	Yes	
Pepco Holdings Inc. & Affiliates	Yes	
PacifiCorp	Yes	See comments under #4.
MRO NSRF	Yes	
Kansas City Power & Light	Yes	
Edison Mission Marketing & Trading	Yes	
Alber Corporation	Yes	
Flathead Electric Cooperative, Inc.	Yes	
Independent Electricity System Operator	Yes	
Entergy Services	Yes	
ATCO Electric Ltd	Yes	
Manitoba Hydro	Yes	
Westar Energy	Yes	
Ameren	Yes	
BAE Batteries USA	Yes	
City of Austin dba Austin Energy	Yes	

Organization	Yes or No	Question 2 Comment
BAE Batteries USA	Yes	
American Transmission Company, LLC	Yes	
CenterPoint Energy	Yes	
Duke Energy	Yes	
PNM Resources	Yes	
Los Angeles Department of Water and Power	Yes	
Response: Thank you for your support.		

3. The Supplemental Reference and FAQ document was revised to reflect changes made to the draft standard and to address additional issues raised. Do you agree with the changes? If you do not agree, please provide specific suggestions for improvement.

Summary Consideration: Several comments were submitted that were unrelated to this question.

Many commenters offered questions and suggestions related to the content of the Supplementary Reference and FAQ document, which resulted in assorted changes throughout the document.

Organization	Yes or No	Question 3 Comment
Fort Pierce Utilities Authority	Negative	1. The applicability of the standard should be modified to reflect the FERC approved interpretation PRC-005-1b Appendix 1 that basically says that applicable Protection Systems are those that protect a BES Element AND trip a BES Element. The applicability as currently stated will sweep in distribution protection: “4.2.1 Protection Systems that are installed for the purpose of detecting Faults on BES Elements (lines, buses, transformers, etc.).” Most network distribution systems that have more than one source into a distribution network will have reverse power relays to detect faults on the BES and trip the step-down transformer to prevent feedback from the distribution to the fault on the BES. This is not a BES reliability issue, but more of a safety and distribution voltage issue. These relays would be subject to the standard as the applicability is currently written, but, should not be and they are currently not within the scope of PRC-005-1b Appendix 1 because the step-down transformer (non-BES) is tripped and not a BES Element (hence, the "and" condition of the interpretation is not met). There are many other related examples of distribution that might be networked or have distributed generation on a distribution circuit where such reverse power relays, or overcurrent relays with low pick-ups, are used for safety and distribution voltage control reasons and are not there for BES Reliability. To make matters

Organization	Yes or No	Question 3 Comment
		worse, for these Reverse Power relays, it is pretty much impossible to meet PRC-023 because the intent of the relay is to make current flow unidirectional (e.g., only towards the distribution system) without regard for the rating of the elements feeding the distribution network. So, if these relays are swept in, and if they are on elements > 200 kV, then the entity would not be able to meet PRC-023 as that standard is currently written. FPUA recommends the SDT should adopt the FERC approved interpretation. 2. Another concern is regarding the sudden pressure relays. These had been out of the scope in all previous draft versions of PRC-005-2 because these do not measure electrical quantities. However, the SDT just added a requirement to test the trip path from the sudden pressure device, arguing that it is captured by the definition of Protection Systems. This inconsistency does not make sense and could create “grey areas” for other devices that can trip for low oil level or high temperature, among others. By their nature, sudden pressure devices are far less reliable than their associated control circuitry. I know of at least one large entity that disables sudden pressure relays on smaller transformers to cut down on nuisance alarms. If it is expected that non-electrically initiated devices may become part of some maintenance standard in the future, I think it would be premature for the SDT to address sudden pressure relays in PRC-005-2. 3. And lastly, page 77 of the Supplementary Reference has some text clarifying the requirement for establishing a baseline test: “For all new installations of Valve-Regulated Lead-Acid (VRLA) batteries and Vented Lead-Acid (VLA) batteries, where trending of the cells internal ohmic measurements to a baseline are to be used to determine the ability of the station battery to perform as designed, the establishment of the baseline as described above

Organization	Yes or No	Question 3 Comment
		should be followed at the time of installation to insure the most accurate trending of the cell/unit." This guidance does not recognize the fact that some battery manufacturers recommend the baseline tests to be performed at some point in time after the install to allow the cell chemistry to stabilize after the initial freshening charge. The manual from a battery manufacturer (Enersys Powersafe) states that "The initial records are those readings taken after the battery has been in regular float service for 3 months (90 days). These should include the battery terminal float voltage and specific gravity reading of each cell corrected to 77F (25C), all cell voltages, the electrolyte level, temperature of one cell on each row of each rack, and cell-to-cell and terminal connection detail resistance readings. It is important that these readings be retained for future comparison". If an entity follows the manufacturer's recommendation, the above statements would lead an auditor to a finding of non-compliance because internal ohmic tests were not performed prior to placing a new battery string in service. A simple modification to the wording would eliminate the conflict.

Response: Thank you for your comments.

1. **The SDT believes that the Applicability, as stated in PRC-005-2, is correct and supports the reliability of the BES. The SDT observes that the approved Interpretation addresses the term, "transmission Protection System," and notes that this term is not used within PRC-005-2; thus, the interpretation does not apply to PRC-005-2. PRC-005-2 specifically addresses Protection Systems that are installed for the purpose of detecting Faults on BES Elements.**

   To address your concern, the distribution protective devices and functions provided as examples in this comment, as pointed out by the commenter, are not "installed for the purpose of detecting Faults on BES Elements," and would, therefore, not be subject to PRC-005-2. A relay used primarily for "safety and distribution voltage control reasons" is clearly not "installed for the purpose of detecting Faults on BES Elements." The reverse power relay application described is also not "installed for

Organization	Yes or No	Question 3 Comment
		the purpose of detecting Faults on BES Elements" (the relays react to changes in power flow direction, which may or may not be due to a Fault), but for the purpose of preventing feedback from the distribution system to the transmission system. Please see the PRC-005-2 Supplementary Reference and FAQ, Section 2.3, for a more detailed discussion of this issue. 2. **DC trip circuit from a sudden pressure relay output to the trip coil of the interrupting device has always been included in the "Control circuitry" portion of a Protection System, and is discussed in Section 15.3 of the PRC-005-2 Supplementary Reference and FAQ document. In regards to including sudden pressure relays themselves, FERC, in Order 758, recently directed NERC to submit an informational filing providing a schedule for addressing sudden pressure relays in PRC-005. The NERC System Protection and Control Subcommittee (SPCS) worked with NERC staff to develop the informational filing, which was filed with FERC on April 12, 2012. Activities associated with the schedule submitted in the filing will be included in a final SAR to further develop PRC-005. A draft SAR has been posted on the project page for information only.** 3. **The Drafting Team has revised the Supplemental Reference and FAQ document based on your recommendations.**
DTE Energy	No	
MRO NSRF	No	1. Section 5.1 (second paragraph, under the first bullet) states: "TBM can include review of recent power system events near the particular terminal. Operating records may verify that some portion of the Protection System has operated correctly since the last test occurred. If specific protection scheme components have demonstrated correct performance within specifications, the maintenance test time clock can be reset for those components." If this "actual event" can be used as proof that the Protection System operated correctly, then this should be added to M3 in the Measures section of PRC-005-2. 2. Section 2.4.1 - Sudden Pressure Relays - This question should be clarified that circuits from only EHV transformers should be considered in scope. As highlighted by the NERC GMD reports EHV transformers (345, 500 & 765 kV) are critical.

Organization	Yes or No	Question 3 Comment
		3. In addition, circuits that do not actually trip a breaker (panel lights, alarms, etc.) should not be included in the scope of components included in the maintenance and testing program.
Response: Thank you for your comments. 1. **Measure M3 lists possible types of evidence, and states, "is not limited to." Therefore, in-service operations can be provided as evidence.** 2. **This standard applies to the BES and certain transformers less than 345kV are, therefore, included.** 3. **Table 5 Component Type states, "Control Circuitry associated with protective functions…" and, therefore, the circuits you reference are not included.**		
FirstEnergy	No	Please see our comments and suggested changes to the Supplemental Reference and FAQ document in Question 4.
Western Area Power Administration	No	Western Area Power Administration does not agree that the trip path from a sudden pressure device is a part of the protection system control circuitry as stated in the revised Supplementary document. FAQ should be used as guidance and not for compliance.
Response: Thank you for your comment. The trip path from a sudden pressure device is a part of the Protection System control circuitry. The sensing element is omitted from PRC-005-2 testing requirements because the SDT is unaware of industry recognized testing protocol for the sensing elements. The SDT believes that Protection Systems that trip (or can trip) the BES should be included. This position is consistent with the currently-approved PRC-005-1B, consistent with the SAR for Project 2007-17, and understands this to be consistent with the position of FERC staff. The Supplementary Reference and FAQ document provides supporting discussion, but is not part of the Standard. The SDT intends that it be posted as a Reference Document, accompanying the standard. As established in SDT Guidelines, the standard is to be a terse statement of requirements, etc., and is not to include explanatory information like that included in the Supplementary Reference and FAQ document.		
Nebraska Public Power District	No	1. Section D 1.3 Evidence Retention - Do not agree with requirement to keep the two most recent performances of each distinct maintenance activity. Should

Organization	Yes or No	Question 3 Comment
		not require records previous to last audit. What is the point of keeping records up to twenty years? 2. FAQ page 7 and 77 now include discussion about how sudden pressure relays are "presently" excluded because they do not meet the definition of a protection system and a method of component verification does not exist. This part I agree with. The problem is that they go on to explain that the DC control circuitry from the Sudden Pressure relay is part of a protection system. This I disagree with. It's clear that the Standards Drafting Team is attempting a compromise to address direction from FERC Docket No. RM10-5-000. This approach however, sets a bad precedence. A trip path from a non-protection system component should not be classified as a protection system trip path. 3. The removal of grace periods and the comments in the FAQ that it will be up to the Auditor to determine if a test was not done due to extraordinary circumstances (example: Communications can't be tested due to the line out from a storm and under repair) is not acceptable. The SDT needs to come up with guidelines for these situations and not leave it up to each auditor to determine what is acceptable.

Response: Thank you for your comments.

1. For a Compliance Monitor to be assured of compliance, the SDT believes the Compliance Monitor will need the data of the most recent performance of the maintenance, as well as the data of the preceding maintenance to validate that entities have been in compliance since the last audit (or currently, since the beginning of mandatory compliance). The SDT specified the data retention in the posted standard to establish this level of documentation. This seems to be consistent with the current practices of several Regional Entities.
2. The trip path from a sudden pressure device is a part of the Protection System control circuitry. The sensing element is omitted from PRC-005-2 testing requirements because the SDT is unaware of industry recognized testing protocol for the sensing

Organization	Yes or No	Question 3 Comment
elements. The SDT believes that Protection Systems that trip (or can trip) the BES should be included. This position is consistent with the currently-approved PRC-005-1b, consistent with the SAR for Project 2007-17, and understands this to be consistent with the position of FERC staff. 3. FERC Order 693 directs NERC to establish maximum allowable intervals. Grace periods would not satisfy this directive.		
PPL Supply NERC Registered Organizations	No	We recommend that the final sentence of M3 and M4 be changed to, "Any of the following constitutes sufficient evidence: dated maintenance records, dated maintenance summaries, dated check-off lists, dated inspection records, dated work orders, or other equivalent documentation," and that the slightly different final sentence of M5 be similarly changed.
Response: Thank you for your comment. The SDT believes the measures should not mandate evidence, but provide examples of evidence.		
MRO NSRF	No	1. Section 5.1 (second paragraph, under the first bullet) states: "TBM can include review of recent power system events near the particular terminal. Operating records may verify that some portion of the Protection System has operated correctly since the last test occurred. If specific protection scheme components have demonstrated correct performance within specifications, the maintenance test time clock can be reset for those components." If this "actual event" can be used as proof that the Protection System operated correctly, then this should be added to M3 in the Measures section of PRC-005-2. 2. Section 2.4.1 - Sudden Pressure Relays - This question should be clarified that circuits from only EHV transformers should be considered in scope. 3. As highlighted by the NERC GMD reports EHV transformers (345, 500 & 765 kV) are critical. In addition, circuits that do not actually trip a breaker (panel lights, alarms, etc.) should not be included in the scope of components included in the maintenance and testing program.

Organization	Yes or No	Question 3 Comment
Response: Thank you for your comments. 1. Measure M3 lists possible types of evidence and states "is not limited to." Therefore, 'in-service' operations can be provided as evidence. 2. This standard applies to the BES and certain transformers less than 345kV are, therefore, included. 3. Table 5 Component Type states, "Control Circuitry associated with protective functions…" and, therefore, the circuits you reference are not included.		
Arizona Public Service Company	No	Either the FAQ or the Standard should define the bases for each interval mandated. See the response to question 2 for further details.
Response: Please see the Technical Justification document associated with Project 2007-17. Please also see Section 8.3 of the Supplementary Reference and FAQ document.		
Ingleside Cogeneration LP	No	We do not agree with the assertion in the reference and FAQs that the DC supply and control circuitry for mechanical components are part of a BES Protection System. This is not an accepted norm in the existing Standard as the Project Team claims - only an expansion in scope that was not properly vetted by the industry. If the Compliance Authorities believe that electrical components which support mechanical systems are rightfully part of the BES or BPS, then this has implications far beyond Protection System maintenance. The appropriate place to begin this determination is with Project 2010-17 Definition of the BES - where it can be fully reviewed by all affected industry stakeholders.
Response: Thank you for your comment. The trip path from a sudden pressure device is a part of the Protection System control circuitry. Sudden pressure relays, as opposed to other types of mechanical components, are installed to detect an electrical **fault** condition inside a transformer. The sensing element is omitted from PRC-005-2 testing requirements because the SDT is unaware of industry recognized testing protocol for the sensing elements. The SDT believes that Protection Systems that trip (or can trip) the BES should be included. This position is consistent with the currently-approved PRC-005-1b, consistent with the SAR for Project 2007-17, and understands this to be consistent with the position of FERC staff.		

Organization	Yes or No	Question 3 Comment
American Electric Power	No	Though the guidance provided in these documents may appear to be beneficial, we are troubled that despite the time spent on them by the drafting team, and the voluminous nature of the references, that the information contained in them essentially fades away upon approval of the standard. Rather than voluminous supplementary references, we suggest adding this information, as necessary, to the standard itself. Not only would this prove beneficial by having less information housed outside of the standard, it might help prevent the need for future CANs and interpretation requests.
Response: Thank you for your comments. The Supplementary Reference and FAQ document provides supporting discussion, but is not part of the standard. The SDT intends that it be posted as a **Reference Document** accompanying the standard. As established in SDT Guidelines, the standard is to be a terse statement of requirements, etc., and is not to include explanatory information like that included in the Supplementary Reference and FAQ document. The Supplementary Reference will be revised in the course of the revision process of the standard.		
Westar Energy	No	1. We believe all of the 4 month intervals can be changed to 6 month intervals and still ensure reliability. It is unclear which equipment Table 1-4(d) applies to. 2. In the heading it says "Excluding distributed UFLS and distributed UVLS", then the line below that says "non-distributed UFLS system, or non-distributed UVLS systems is excluded".
Response: Thank you for your comments. 1. The activity related to this interval is to verify various basic operating parameters. The SDT believes that extension of verification of these parameters beyond the interval within the standard is inappropriate. 2. These are addressing two different items; the first addresses distributed UFLS/UVLS, whether tripping at BES levels or not, and the second addresses non-distributed UFLS/UFLS/SPS that trips only non-BES interrupting devices.		
Ameren	No	We agree with the intent of the Supplement changes but believe that they are either incomplete or need clarification. Therefore, we provide the specifics as

Organization	Yes or No	Question 3 Comment
		follow : (a) Page 93, Revise Section 15.7 Distributed UFLS (i) Change Table 1-2 to 1-3.(ii) Include 'Verify operation...and/or auxiliary tripping device' to agree with Table 3. (b) Please identify BES Elements in Supplementary Reference Figure 2. (c) Remove 'Reverse power relays' from the bulleted list on the top section of page 33. They provide thermal of the steam turbine, and they may protect CTG speed reduction gear teeth, but neither of these are electrical protection of the generator. (d) Please add Interval FAQ to address a component minimum maintenance activity that is not in the present PRC-005-1 program. (i) : "How is interval proven for a component minimum maintenance activity that is not in the present PRC-005-1 program? For example, suppose the present program continuously monitors a communication system, say audio tones, and personnel respond to alarms; this approach presently have basis that is sufficient. (ii) Table 1-2 requires two maintenance activities every 12 calendar years: 1) verify channel meets performance criteria; and 2) verify essential I/O. The entity is required to perform these minimum maintenance activities one time in the first 13 years after regulatory approval. The 12 year interval is proven by the date of the PRC-005-2 maintenance activity and the date of your PRC-005-1 program applicable for the previous maintenance. After the second time the PRC-005-2 maintenance activity is performed, appropriately sometime in year 14 to 25 after regulatory approval, then interval will be proven by the dates of the two PRC-005-2 maintenance activities." (e) Page 17 We disagree with retention of maintenance records for replaced equipment as this can cause confusion. At most the last maintenance date could be retained to prove interval between it and the test date of the replacement

Organization	Yes or No	Question 3 Comment
		equipment that provides like-kind protection. (f)Page 36, FAQ 'initial date for maintenance' answer is inconsistent with CAN-0011. Though the CAN applies to PRC-005-1, it should be consistent with NERC's position on this. (g) Page 71, Please remove 'The trip path from a sudden pressure device is a part of the Protection System control circuitry...' because the actuating relay does not respond to electrical quantities. This is just one example of the many gotcha's that will no doubt arise in enforcement. (h) If a capacitor trip device is an example of a non-battery based station DC supply, then please provide a FAQ to convey it.

Response: Thank you for your comments.

a. The SDT modified the Supplementary Reference and FAQ document, as suggested.

b. The applicable facilities for a generator are listed in Section 4.2.5 of the standard. Figure 2 is a visual representation of this.

c. Reverse power relays, as discussed in your comment, do not detect Faults; but if they can trip the generator, they must be maintained per 4.2.5.

d. This issue is addressed in the Implementation Plan for Project 2007-17.

e. The records for removed/replaced equipment need to be retained to provide documentation that you were in compliance for the entire compliance monitoring period.

f. The SDT has provided guidance as it relates to PRC-005-2.

g. The trip path from a sudden pressure device is a part of the Protection System control circuitry. The sensing element is omitted from PRC-005-2 testing requirements because the SDT is unaware of industry recognized testing protocol for the sensing elements. The SDT believes that Protection Systems that trip (or can trip) the BES should be included. This position is consistent with the currently-approved PRC-005-1b, consistent with the SAR for Project 2007-17, and understands this to be consistent with the position of FERC staff.

Organization	Yes or No	Question 3 Comment
h. If the "capacitor trip device" you reference is the stored energy device for the breaker, it would not be included in Table 1-4(d).		
Central Lincoln	No	The Supplemental Reference and FAQ apparently has not kept up with definition changes and uses uncapitalized "component" "Protection System components". Please use capitals if defined terms are intended.
Response: Thank you for your comment. The SDT modified the Supplementary Reference and FAQ document as suggested.		
BAE Batteries USA	No	Page 20 states that every 18 months "battery ohmic values to station battery baseline (if performance tests are not opted)" should be changed to add comment that ohmic values, while permissible as a tool, should not be taken to validate the actual capacity, thus the reliability of the battery. If capacity is an issue due to questionable ohmic values shown, a decision must be made to [1] perform a capacity test following one of the three methodologies recorded in IEEE 450 or IEEE 1188; [2] make a decision to replace the battery string depending upon the number of cells with questionable ohmic values shown, the age of the battery string, and the critical nature of the station in question; or [3] accept the risk that the battery may or may not perform as intended due to the lack of a true knowledge of the battery capacity (See IEEE Letter to Al McMeekin). Every 18 calendar months verify/inspect the following: "Cell Condition of all individual battery cells (where visible) should add "or as frequently as recommended in the battery manufacturer's operating instructions."Every 6 years: perform or verify the following:"Battery Performance Test (if internal ohmic tests are not opted)" should be changed to read "Battery Performance Test (if ohmic tests are not conducted or if ohmic test values show that a degraded situation with the cells call into question whether the battery will perform to "design requirements."this should be repeated where referenced in additional examples (VLA, VRLA, Ni-Cd)
Response: Thank you for your comment. The drafting team agrees with your statement, and those of others concerning the true capacity of the station battery and relating it to internal ohmic measurements. Tables 1-4a, 1-4b and 1-4c have been modified for clarity, and the Supplemental Reference and FAQ document has been modified to further elaborate on these concerns.		
ExxonMobil Research and	No	: As written, the current draft of PRC-005-2 discriminates against smaller entities

Organization	Yes or No	Question 3 Comment
Engineering		that do not have a population size of 60 for each component type. Historical records provide an accurate account of how specific components have performed in their installed environment. For a set population size, increasing the number of historical data points should improve the accuracy of an entity's calculated mean time between failures, so, if you increase the period over which the historical data must be evaluated, you can compensate for a smaller segment population size. The SDT's current draft prevents smaller entities from using a larger historical data set to make up for a smaller population size when developing a performance based protective system maintenance and testing program. The SDT should reconsider allowing smaller entities to use historical records that extend for period longer than a single year in the development of a performance based program.
Response: Thank you for your comment. Small entities are permitted to aggregate their components with similar components of other entities to meet the component populations, as long as the programs are (and remain) similar – See Section 9 of the Supplementary Reference and FAQ document and the associated footnote to Attachment A. Decreasing the component population below the requirements of Attachment A will result in an unsound program due to component populations that are not statistically significant. The Supplementary Reference and FAQ document states, "Any population segment must be comprised of at least 60 individual units; if any asset owner opts for PBM but does not own 60 units to comprise a population then that asset owner may combine data from other asset owners until the needed 60 units is aggregated." Historical data may be good for trending, but may not be suitable for judging current maintenance program effectiveness.		
TransAlta Centralia Generation LLC	Yes	More detail explanation on Segment is required; the reason of sixty (60) individual components is required for one Segment. More detail explanation on Countable Event is required.
Response: Thank you for your comments. The SDT believes that Segment and Countable Events are clearly stated in the standard. Decreasing the component population below the requirements of Attachment A will result in an unsound program due to component populations that are not statistically significant.		
City of Austin dba Austin Energy	Yes	The effort expended by the SDT in creating and revising the content of the

Organization	Yes or No	Question 3 Comment
		Supplemental Reference and FAQ is admirable and most appreciated. The guide is a useful reference.
Response: Thank you for your comment and support.		
Los Angeles Department of Water and Power	Yes	LADWP notices that the terms "Unresolved Maintenance Issue" and "maintenance-correctable issue" are used in several places. We recognize that "Unresolved Maintenance Issue" is defined as a deficiency identified during a maintenance activity that causes the component to not meet the intended performance and requires follow-up corrective action. Please define "maintenance-correctable issue" and clarify the differences between the two terms.
Response: Thank you for your comments. "Unresolved Maintenance Issue" replaced the term "maintenance-correctable issue," and the SDT corrected the Supplementary Reference and FAQ document to reflect the change.		
Progress Energy		1. Table 3, Row 7: The requirement to "Verify electrical operation of electromechanical lockout and/or tripping auxiliary devices" contradicts Section 15.7, bullet 2 of the Supplementary Reference and FAQ document. In the supplementary reference, the phrase "and/or auxiliary tripping device(s)" has been struck out.
Response: Thank you for your comments. The Supplementary Reference and FAQ document has been modified per your suggestion.		
EPRI	No	see comments in question 1
Northeast Power Coordinating Council	Yes	
Tacoma Public Utilities	Yes	
Imperial Irrigation District (IID)	Yes	
Southwest Power Pool Standards Development Team	Yes	

Organization	Yes or No	Question 3 Comment
Tennessee Valley Authority	Yes	
PNGC Comment Group	Yes	
Bonneville Power Administration	Yes	
ACES Power Marketing Standards Collaborators	Yes	
Southern Company Generation	Yes	
Kansas City Power & Light	Yes	
Edison Mission Marketing & Trading	Yes	
Alber Corporation	Yes	
Independent Electricity System Operator	Yes	
Liberty Electric Power LLC	Yes	
Entergy Services	Yes	
ATCO Electric Ltd	Yes	
Manitoba Hydro	Yes	
US Bureau of Reclamation	Yes	
American Transmission Company, LLC	Yes	
CenterPoint Energy	Yes	
Xcel Energy	Yes	
Duke Energy	Yes	
PNM Resources	Yes	
Response: Thank you for your support.		

4. If you have any other comments on this Standard that you <u>have not already provided in response to the prior questions</u>, please provide them here.

Summary Consideration: Several comments were repeated from Questions 1, 2, or 3, and the summary consideration responses are not repeated here.

Numerous commenters suggested minor changes to the definition of the terms "inspect" and "Countable Event." In response, the SDT modified the description of the term, "inspect" within the definition of PSMP. Previously "inspect" was "Examine for signs of component failure, reduced performance or degradation." now "inspect" is "Examine for signs of component failure, reduced performance or degradation." The SDT also modified the definition of Countable Event from "A Component which has failed and requires repair or replacement…" to "A failure of a Component requiring repair or replacement …"

The SDT continued to receive comments regarding the Applicability of the standard. The SDT modified the Applicability Clause 4.2.5.4 to read: "Protection Systems for station service or excitation transformers connected to the generator bus of generators which are part of the BES, that act to trip the generator either directly or via lockout or tripping auxiliary relays."

Some commenters questioned the last line in Table 1-2 for Communications Systems. The SDT realized they had several errors in the table – one omitted element and one incorrect interval. The table was corrected.

Several comments were offered regarding the station battery activities in Tables 1-4 (a-f). Representatives of the IEEE Stationary Battery Committee assisted the SDT in making revisions to these tables to address concerns related to ohmic testing of the cell/units.

Several commenters questioned elements of the criteria in Attachment A for performance-based maintenance; the SDT explained the rationale for these criteria, including, where appropriate, the related statistical basis.

Several comments pointed out inconsistencies between the Standard and Supplementary Reference and FAQ. The SDT modified the Standard and Supplementary Reference and FAQ to address these inconsistencies.

A few commenters questioned portions of the standard, or suggested changes that the SDT chose not to adopt. The SDT responded with their rationale. These comments included:

- **NERC should provide a format for test reports, etc.**
- **Include batteries within a performance-based PSMP**
- **Objections to the inclusion of distribution devices that are installed for the benefit of the BES**

- **VSLs permitting entities to experience some small level of non-performance relative to the standard without incurring a violation**
- **VSLs set at inappropriate levels**
- **The inclusion of the control circuitry related to sudden pressure relays, even though sudden pressure relays themselves are not included**
- **Various facets of control circuitry maintenance**
- **Specific intervals or activities within the tables**
- **Evidence retention language**
- **Intervals for lockout relays**
- **Voltage and current sensing devices**

Organization	Yes or No	Question 4 Comment
Northern Indiana Public Service Co.	Negative	A format for maintenance reports and specific test requirements for relays are missing.
Response: Thank you for your comments. The SDT does not believe it is necessary or appropriate to prescribe a specific format for maintenance results or test requirements.		
James A Maenner	Negative	As written, the standard may require DPs to include distribution protection devices designed to isolate and protect distribution facilities from faults on monitored transmission or other BES facilities. Qualifying language should be added differentiate protective systems which control BES and distribution facilities for faults on the BES.
Response: Thank you for your comments. PRC-005-2 specifically addresses Protection Systems that are installed for the purpose of detecting Faults on BES Elements, even if they are installed on distribution facilities. UFLS and UVLS devices which are commonly installed on distribution facilities for the purposes of addressing related NERC Standards are included. Protection Systems installed on distribution facilities for the purposes of detecting Faults on distribution facilities are not included.		
SERC Reliability Corporation	Negative	FERC Order 758 includes directives that affect this project. I understand that the

Organization	Yes or No	Question 4 Comment
		SPCS/SAMS group is looking at the technical documents to support additional standards activity but as this project is presented, it does not meet the FERC directives. Otherwise, I could vote affirmatively, but I do have some concerns about how clearly and unambiguously the standards requirements are written. This standard should be a candidate for the RSAW initiative being developed by the Standards Committee.
Response: Thank you for your comments. The Standards Committee has directed the PSMTSDT to finalize PRC-005-2 and present it to the NERC Board of Trustees for adoption, and concurrent with this posting of PRC-005-2 to post for information a draft SAR for a second phase of Project 2007-17 addressing further modifications to PRC-005-2. FERC Order 758 includes directives associated with Maintenance and Testing of Auxiliary and Non-Electrical Sensing Relays, Reclosing Relays, and DC Control Circuitry. Regarding these directives in relation to PRC-005-2: 1. Testing of Auxiliary and Non-Electrical Sensing Relays – The NERC System Protection and Control Subcommittee (SPCS) recently worked with NERC staff to develop an informational filing in response to Order 758. Activities associated with the schedule submitted in the filing will be included in a final SAR to establish a future phase of Project 2007-17 for future development of PRC-005. A draft SAR is posted on the project page for information only. 2. Reclosing relays will be addressed in a second phase of this project, which will produce PRC-005-3. Development of that revision will begin after PRC-005-2 is completed and the NERC SPCS completes the technical documentation regarding reclosing relays. 3. DC Control Circuitry and Components – This draft standard PRC-005-2 includes extensive, specific maintenance activities (with maximum maintenance intervals) related to the DC control circuits.		
Southwest Transmission Cooperative, Inc.	Negative	1. For the Requirement R1's High VSL, "entities'" should be "entity's" to be consistent with the other VSLs. 2. It is not clear why missing three component types jumps to a Severe VSL. Missing two is a Moderate VSL. Missing three should be a High VSL.
Response: Thank you for your comments.		

Organization	Yes or No	Question 4 Comment
1. The SDT has corrected the Requirement R1 VSL, as you suggest. 2. The SDT believes that missing three components is considered a "significant percentage," and is in accordance with the VSL guidelines.		
Midwest ISO, Inc.	Negative	In the VSL for Table 4 it seems that the phrase "5% or less" should be "not more than 5%". With the original language it seems like an entity could be found to have an R4 lower VSL violation for "failure" of zero meaning they had done no testing. This VSL is written in the negative and should be rewritten in the positive.
Response: Thank you for your comments. The VSL Guidelines, developed in accordance with FERC's VSL Order, establish the Lower VSL for stepped VSLs as "5% or less," the Medium VSL as "more than 5% but less than (or equal to) 10%," the High VSL as "more than 10% up to (and including) 15%," and the Severe VSL as "more than 15%."		
Lincoln Electric System	Negative	Please refer to comments submitted by the MRO NERC Standards Review Forum for LES' concerns related to PRC-005-2.
Western Area Power Administration	Negative	Please see comments provided on Official Comment Form
Minnkota Power Cooperative, Inc.	Negative	
Lakeland Electric	Negative	Please see FMPA comments
Kissimmee Utility Authority	Negative	Please see separately submitted FMPA comments.
Baltimore Gas & Electric Company	Negative	Please see the issues raised in the Comment Form submitted on behalf of Constellation.
Occidental Chemical	Negative	See comments submitted by Ingleside Cogeneration LP
Dairyland Power Coop.	Negative	See MRO NSRF comments.
U.S. Army Corps of Engineers	Negative	See MRO/NSRF comments
Dairyland Power Coop.	Negative	See NSRF comments.
Beaches Energy Services	Negative	The applicability of the standard should be modified to reflect the FERC approved interpretation PRC-005-1b Appendix 1 that basically says that applicable Protection Systems are those that protect a BES Element AND trip a BES Element. The

Organization	Yes or No	Question 4 Comment
		interpretation states: The applicability as currently stated will sweep in distribution protection: “4.2.1 Protection Systems that are installed for the purpose of detecting Faults on BES Elements (lines, buses, transformers, etc.)” Many (most) network distribution systems that have more than one source into a distribution network will have reverse power relays to detect faults on the BES and trip the step-down transformer to prevent feedback from the distribution to the fault on the BES. This is not a BES reliability issue, but more of a safety issue and distribution voltage issue. These relays would be subject to the standard as the applicability is currently written, but, should not be and they are currently not within the scope of PRC-005-1b Appendix 1 because the step-down transformer (non-BES) is tripped and not a BES Element (hence, the "and" condition of the interpretation is not met). There are many other related examples of distribution that might be networked or have distributed generation on a distribution circuit where such reverse power relays, or overcurrent relays with low pick-ups, are used for safety and distribution voltage control reasons and are not there for BES Reliability. To make matters worse, for these Reverse Power relays, it is pretty much impossible to meet PRC-023 because the intent of the relay is to make current flow unidirectional (e.g., only towards the distribution system) without regard for the rating of the elements feeding the distribution network. So, if these relays are swept in, and if they are on elements > 200 kV, then the entity would not be able to meet PRC-023 as that standard is currently written. So, the SDT should adopt the FERC approved interpretation.

Response: Thank you for your comments.

The SDT believes that the Applicability, as stated in PRC-005-2, is correct and supports the reliability of the BES. The SDT observes that the approved Interpretation addresses the term, “transmission Protection **System**,” and notes that this term is not used within PRC-005-2; thus the interpretation does not apply to PRC-005-2. PRC-005-2 specifically addresses Protection Systems that are installed for the purpose of detecting Faults on BES Elements.

To address your concern, the distribution protective devices and functions cited in this comment are not “installed for the purpose of detecting Faults on BES Elements,” and would, therefore, not be subject to PRC-005-2. A relay used primarily for “safety and distribution voltage control reasons” is clearly not “installed for the purpose of detecting Faults on BES Elements.” The reverse

Organization	Yes or No	Question 4 Comment
power relay application described is also not “installed for the purpose of detecting Faults on BES Elements” (the relays react to changes in power flow direction, which may or may not be due to a Fault) but for the purpose of preventing feedback from the distribution system to the transmission system. Please see the PRC-005-2 Supplementary Reference and FAQ, Section 2.3, for a more detailed discussion of this issue.		
U.S. Bureau of Reclamation	Negative	1. The definition for PSMP is incongruous with the use of the PSMP in Requirement R1. Requirement R1, including the Measure and VSL focus on the identification of maintenance method of the Component types and not that the PSMP is in fact being used for maintenance of the component. 2. The requirement R5 indicates the entity has to "demonstrate" efforts to correct identified unresolved maintenance issues. The measure M5 described documentation of the efforts. The requirement language should be explicit. Does the standard want a demonstration which implies active role of the entity to prove what it is doing, or to provide documentation of the activities underway to correct deficiencies? The language in the requirement should be altered to "Each Transmission Owner, Generator Owner, and Distribution Provider shall prepare a CAP for each identified Unresolved Maintenance Issue." A second requirement is needed to require that "Each Transmission Owner, Generator Owner, and Distribution Provider shall complete its CAP to correct the identified Unresolved Maintenance Issues." The measures would need to be adjusted accordingly to reflect the CAP and evidence that the entity completed the CAP. 3. Re Terms defined for use only within PRC-005-2: The standard provides definitions which will not be incorporated into the Glossary of Terms. This would allow the definitions as used in this standard to conflict with the definition used in other standards if this practice becomes more widespread and would reduce the cohesiveness of the standard set. 4. Re The definition of Components: The standard defined what constitutes a

Organization	Yes or No	Question 4 Comment
		control circuit as a component type with "Control circuitry associated with protective functions through the trip coil(s) of the circuit breakers or other interrupting devices." The standard then modified the definition by allowing "a control circuit Component is dependent upon how an entity performs and tracks the testing of the control circuitry." The definition should not be dependent upon practice. This makes the definition a fill in the blank definition. Either eliminate the allowance or remove the definition of control circuit.
Response: Thank you for your comments. 1. The SDT believes that the definition of a PSMP is linked to Requirement R1 in that the entity's program shall include one or all of the parameters in the definition. Requirement R1 requires that the entity establish their program and is the foundation for the standard. Requirements R3-R4 address implementation of the entity's PSMP. 2. The term within Requirement R5, "… demonstrate efforts …" is intended for both – that the entities are acting to correct the deficiency and also (to prove compliance) maintaining documentation of the activities underway to correct the deficiency. The SDT elected to not require a "Corrective Action Plan," as defined in the NERC Glossary of Terms, to avoid much of the systemic, ongoing documentation attendant to that term. However, if an entity wishes to use a Corrective Action Plan as defined, that would be an acceptable method of meeting Requirement R5. 3. The standard specifies that the terms used are intended for this document only; and, therefore, there should not be any conflict with their use in any other PRC standard. 4. The intent of the different means of identifying control circuitry was to accommodate various entities' philosophies on testing of these circuits. Regardless of how an entity chooses to identify their control circuitry, the entity must meet the requirements of the standard regarding maintenance of control circuitry.		
Independent Electricity System Operator	Negative	The IESO continues to disagree with the VRF assigned to the new Requirements R3 and R4. R3 and R4 ask for implementing the maintenance plan (and initiate corrective measures) whose development and content requirements (R1 and R2) themselves have a Medium VRF. Failure to develop a maintenance program with the attributes specified in R1, and stipulation of the maintenance intervals or performance criteria as required in R2, will render R3/R4 not executable. Hence, we reiterate our position that the VRF for R3 be changed to Medium.

Organization	Yes or No	Question 4 Comment
Response: Thank you for your comments. The SDT team disagrees and believes the failure to implement a PSMP should be assigned a VRF of High.		
Illinois Municipal Electric Agency	Negative	The inconsistency between the proposed Protection System language in the Applicability section of PRC-005-2 and the transmission Protection System interpretation recently approved by FERC (PRC-005-1b Appendix 1) needs to be resolved.
Response: The SDT believes that the Applicability, as stated in PRC-005-2, is correct and supports the reliability of the BES. The SDT observes that the approved Interpretation addresses the term "transmission Protection System," and notes that this term is not used within PRC-005-2; thus, the interpretation does not apply to PRC-005-2. PRC-005-2 specifically addresses "Protection Systems that are installed for the purpose of detecting Faults on BES Elements." Please see Section 2.3 of the Supplementary Reference Document for additional discussion.		
Central Lincoln PUD	Negative	The percentage based VSL unreasonably penalizes smaller entities, since one Component can cause them to hit the 10% cutoff for a High VSL while a large entity may miss 100s of components without exceeding the Lower VSL.
Response: Thank you for your comments. A smaller entity will have less to maintain in accordance with the standard; and, thus, the percentages are still appropriate.		
JEA	Negative	This standard greatly expands the scope of work that will be required of JEA without providing a corresponding incremental increase in reliability and may in fact cause reliability issues. Specific concerns are that JEA believes that we do continuous monitoring of a vast majority of our components and our approach has demonstrated its effectiveness but the revised standard will most likely require JEA to have to adopt a new approach with significant increases in manpower hours. Additionally, testing lockouts is of great concern because of its ability to cause reliability issues.
Response: Thank you for your comments. The SDT believes that performing these maintenance activities will benefit the reliability of the BES. If your components are monitored according to the attributes specified in Table 1-1 through 1-5, you may be able to utilize the extended intervals/minimized		

Organization	Yes or No	Question 4 Comment
activities associated with those monitoring attributes within the tables. The SDT believes that electromechanical lockout relays need periodic operation. As such, these devices are required to be exercised at the same six-year interval required for electromechanical relays. The SDT recognizes the risk of 'human error' trips when testing lockout devices, but believes these risks can be managed. Performance-based maintenance is an option if you want to extend your intervals beyond six years.		
City and County of San Francisco	Negative	VSL's are based upon Failure to Maintain Percentages for "a specific Protection System component type". VSL's should be based upon Failure to Maintain Percentages for total number of Protection System components, and not give greater weight in the VSL determination, to component types with few elements, like station batteries.
Response: Thank you for your comments. The SDT believes that these VSLs should address failures to maintain percentages of each Component Type. Failure to maintain quantities of low-population Component Types, such as station batteries, may have serious consequences for BES reliability, and the SDT believes that these must not be masked by larger populations of other Component Types, such as protective relays.		
Gainesville Regional Utilities	Negative	We support FMPA's position on this matter.
Response: Thank you for your comments. Please see our response to FMPA's comments.		
Blachly-Lane Electric Co-op	Affirmative	Please see "PNGC Comment Group" for our comments.
Georgia Power Company	Affirmative	Refer to Comments submitted by Antonio Grayson.
Georgia Transmission Corp.	Affirmative	
Western Electricity Coordinating Council	Affirmative	
SMUD	Affirmative	
Western Farmers Electric Cooperative	Affirmative	
Central Electric Cooperative, Inc. (Redmond, Oregon)	Affirmative	Please see "PNGC Comment Group" for our comments.
Clearwater Power Co.	Affirmative	Please see "PNGC Comment Group" for our comments.
Consumers Power Inc.	Affirmative	Please see "PNGC Comment Group" for our comments.

Organization	Yes or No	Question 4 Comment
Coos-Curry Electric Cooperative, Inc	Affirmative	Please see "PNGC Comment Group" for our comments.
Fall River Rural Electric Cooperative	Affirmative	Please see "PNGC Comment Group" for our comments.
Lane Electric Cooperative, Inc.	Affirmative	Please see "PNGC Comment Group" for our comments.
Northern Lights Inc.	Affirmative	Please see "PNGC Comment Group" for our comments.
Pacific Northwest Generating Cooperative	Affirmative	Please see "PNGC Comment Group" for our comments.
Raft River Rural Electric Cooperative	Affirmative	Please see "PNGC Comment Group" for our comments.
Umatilla Electric Cooperative	Affirmative	Please see "PNGC Comment Group" for our comments.
West Oregon Electric Cooperative, Inc.	Affirmative	Please see "PNGC Comment Group" for our comments.
Ohio Edison Company	Affirmative	Please see FirstEnergy's comments submitted through the formal comment period.
MidAmerican Energy Co.	Affirmative	Please see MidAmerican and MRO NSRF Comments.
Madison Gas and Electric Co.	Affirmative	Please see MRO NSRF comments
Great River Energy	Affirmative	Please see MRO NSRF comments.
Omaha Public Power District	Affirmative	Please see MRO NSRF Comments.
Muscatine Power & Water	Affirmative	Please see the comments submitted by MRO NSRF
North Carolina Electric Membership Corp.	Affirmative	Please see the formal comments submitted by ACES Power Marketing.
Midwest ISO, Inc.	Affirmative	See Comments submitted by the MRO NSRF.
MidAmerican Energy Co.	Affirmative	See MidAmerican and NSRF comments
Southwest Transmission Cooperative, Inc.	Affirmative	1. The first part of definition of a Countable Event should be modified as follows: “The failure of a Component such that it requires repair or replacement...”. As it is currently word, it is technically counting the Component as the Countable Event and not the failure of the component. Considering that the other two items that are Countable Events are conditions and misoperations, it seems appropriate to

Organization	Yes or No	Question 4 Comment
		make failure the Countable Event. 2. Application of this standard to UFLS is problematic as worded in Section 4.2.2. The UFLS are only applicable if "installed per ERO underfrequency load-shedding requirements". Technically, no UFLS fits this description because there are no ERO requirements to have a UFLS. PRC-006-0 was never approved by the Commission and is not enforceable. The Commission considered it a "fill-in-the-blank" standard. While PRC-006-1 corrects the "fill-in-the-blank" issues and was approved by the NERC BOT November 4, 2010, the Commission has yet to act on it. 3. The data retention requirement for the Protection System Maintenance Program documentation seems excessive. The Data Retention section states that all versions since the last compliance audit must be maintained. Since TOs, GOs, and DPs are all on six year audit cycles, this would require maintaining this documentation for six years. Is this really necessary? The length could become even greater once NERC implements registered entity assessments that could shorten or lengthen the periods between compliance audits. The data retention requirements for Requirements R2, R3, R4, and R5 are not consistent with NERC Rules of Procedure. Section 3.1.4.2 of Appendix 4C - Compliance Monitoring and Enforcement Program states that the compliance audit will cover the period from the day after the last compliance audit to the end date of the current compliance audit. The data retention requirements compel the registered entity to retain documentation for the longer of "the two most recent performances of each distinct maintenance activity for Protection System Components, or all performances of each distinct maintenance activity for the Protection System Component since the previous scheduled audit date". While it may have been intended to apply to both clauses, the "since the previous schedule audit date"

Organization	Yes or No	Question 4 Comment
		only applies to the second clause. Since some of the maintenance activities have intervals of 12 years, this would require the registered entity to retain documentation for 24 years which cannot be audited since it is outside the audit window per the Rules of Procedures. At a minimum, we suggest clarifying that the documentation must not be maintained past the day after the last audit completion date. 4. In the fourth paragraph of the Data Retention section, Component is not used consistently. It is used in both singular and plural form. It seems like it should be one or the other. 5. Requirement R1 VSLs: For the High VSL, "entities'" should be "entity's" to be consistent with the other VSLs. 6. It is not clear why missing three component types jumps to a Severe VSL. Missing two is a Moderate VSL. Missing three should be a High VSL.

Response: Thank you for your comments.

1. The SDT agrees with your comments on Countable Event, and has modified the definition of Countable Event to: "A failure of a Component requiring …"
2. Applicability Clause 4.2.2 applies to whatever ERO-required UFLS that may exist, either today or in the future. NERC Reliability Standard PRC-006-1 has now been approved by FERC.
3. The SDT believes that all versions of the entity's PSMP should be retained for audit purposes. For a Compliance Monitor to be assured of compliance, the SDT believes the Compliance Monitor will need the data of the most recent performance of the maintenance, as well as the data of the preceding maintenance to validate that entities have been in compliance since the last audit (or currently, since the beginning of mandatory compliance). The SDT has specified the data retention in the posted standard to establish this level of documentation.
4. The SDT has corrected the fourth paragraph of the Evidence Retention section as you suggested.
5. The SDT has corrected the Requirement R1- High VSL, as you suggested.
6. The SDT believes that missing three components is considered a "significant percentage," and is in accordance with the VSL

Organization	Yes or No	Question 4 Comment
Guidelines.		
Oncor Electric Delivery	Affirmative	The proposed consolidation of these standards (PRC-005-1, PRC-008-0, PRC-11-0 and PRC-017-0) provides more clarity and less room for varying interpretations for relay maintenance and testing.
Response: The SDT thanks you for your comment and affirmative vote.		
Southern Company Generation		For the 18 month / 6 year activities, it is technically incorrect to allow equivalency between internal ohmic measurements and performance testing. This view is not substantiated by industry experience, documentation, or standards. Additionally, it should be specified to the auditor that the intervals for the battery maintenance are relevant to the component, not the application. This means that if a battery is replaced just before a required 6 year performance test, the 6 year interval for the performance test is reset.
Response: Thank you for your comment. The drafting team agrees with your statement, and those of others concerning the true capacity of the station battery and relating it to internal ohmic measurements. Tables 1-4a, 1-4b and 1-4c have been modified for clarity, and the Supplemental Reference and FAQ document will be modified to further elaborate on these concerns. The SDT agrees with your assessment that the maintenance activity is relevant to the component, not the application. Guidance to the auditors of this nature is beyond the ability of the SDT. See Section 4.1 of the Supplementary Reference and FAQ document for additional discussion on this topic.		
Ameren		(a) R3 & R4: Change VRF to “Medium” for the following reasons: (i) Consistency with existing standards that PRC-005-2 replaces. Per the VRF_Standards_Applicability_Matrix_2012-03-01, PRC-005-1b R2 VRF is Lower, PRC-008-0 R2 VRF is Medium, PRC-011-0 R2 VRF is Lower, and PRC-017-0 R2 VRF is Lower. (ii) We are not aware that lack of Protection System maintenance alone has directly caused or contributed to bulk electric system instability, separation, or a cascading sequence of failures. (iii) Many entities do not presently perform several of the proposed minimum maintenance activities, and/or perform maintenance activities at greater than the PRC-005-2 maximum interval. Yet BES system instability, separation, or cascading sequence of failure events are extremely rare. (iv) Either change VRF to

Organization	Yes or No	Question 4 Comment
		Medium, or double the percentage ranges applied to each component type across VSLs. We strongly believe that the SDT needs to retune these to match the experienced risk, which has been extremely low. (b) Measure M3 on page 6 should only apply to 99.5% of the components. Please revise to state: "Each ... shall have evidence that it has implemented the Protection System Maintenance Program for 99.5% of its components and initiated...." We believe that PRC-005-2 unrealistically mandates perfection without providing technical justification. A basic premise of engineering is to allow for reasonable tolerances, even Six Sigma allows for defects. Requiring perfection may well harm reliability by distracting valuable resources from higher priority duties concerning the Protection System. We are not asking for the VSL to be changed. The consequence of a very small number of components having a missed or late maintenance activity is insignificant to BES reliability. Our proposed reasonable tolerance sets an appropriate level of performance expectation. We disagree with the notion that this is "non-performance". (c) Measure M5 - add 'internal inventory / parts request, trouble investigation assignment, trouble repair report' as examples of an entity undertaking efforts with internal parts and/or labor resources. (d) Augment R3 and R4 VSL with a 'number based limit for populations up to 100 components' for comparable treatment of small entities. For example, for Lower VSL restate as '...the responsible entity failed to maintain from one to five Components if total Components is less than 100; or 5% or less of the total Components if total exceeds 99 included within a specific Protection System Component Type...'. Otherwise a small entity could unfairly incur a Severe violation for the same number of Components that a larger entity would incur a Lower VSL. (i) Similarly, Moderate numbers should be 6 to 10; High 11 to 15; and Severe 16 or more if the total Components of a certain Component Type that is less than 100. (e) Augment R5 VSL with percentage based limits for comparable treatment of larger entities. For example, for Lower VSL restate as 'The responsible entity failed to undertake efforts to correct 5 or less Unresolved Maintenance Issues if total of such issues in the audit period is less than 100; or 5% or less if total of such issues in the

Organization	Yes or No	Question 4 Comment
		audit period exceeds 99.' (i) Similarly, Moderate numbers should be >5% to 10%; High >10% to 15%; and Severe more than 15% if the total Unresolved Maintenance Issues in the audit period exceeds 99. (f) Please number all pages of the standard. They are missing from pages with tables. (g) Please add a title to the table following Table 3. Is it a continuation of Table 3?
Response: Thank you for your comments. a) The SDT disagrees, and believes a VRF of High is appropriate for Requirements R3 and R4. b) NERC criteria for VSLs do not currently permit them to allow some level of non-performance without being in violation. c) The SDT agrees that the examples listed would constitute evidence of undertaking efforts to correct Unresolved Maintenance Issues; however, Measure M5, as written, includes the phrase, "… includes but is not limited to …" to emphasize that entities may use other evidence. d) The SDT disagrees and believes a smaller entity will have less to maintain in accordance with the standard; and, thus, the percentages are still appropriate. e) The SDT disagrees and believes the VSL's for Unresolved Maintenance Issues should be a numeric quantity and not a percentage. In response to each of the comments 'a' through 'e', the SDT recommends reviewing the "VRF/VSL Justification" that is posted with the standard. This document provides the SDT's analysis of how the VRFs and VSLs meet FERC and NERC guidelines, as required for the standard to achieve regulatory approval. f) The SDT numbered all the pages. g) The SDT corrected the Table 3 header issue.		
Sacramento Municipal Utility District		1) SMUD wishes to comment on the requirement to test the trip paths from relays that do not respond to electrical quantities. In two separate sections of the FAQ, the SDT included this new guidance on the trip paths. In section 2.4.1 of the FAQ, the SDT plainly asserts that the trip path from Sudden Pressure Relays (SPR) will now be covered and implies that the trip paths from non-electrically initiated devices might also be covered. In section 2.4.1, the SDT does not provide any guidance on how to determine which trip paths are included, but does provide guidance on how one might test the trip path. In section 15.3, the SDT finally provides the guidance -

Organization	Yes or No	Question 4 Comment
		control circuits (trip paths) are included if the relay is installed to detect faults on BES Elements. In reviewing the definition of Protection System, SMUD feels the "Control circuitry associated with protective functions..." to be in reference to the "Protective relays which respond to electrical quantities". The SDT is now applying a new interpretation in which each of the five bullets is considered separately. Furthermore, the SDT appears to be defining "...associated with protective functions..." to mean detecting faults on the BES. What basis can the SDT offer for defining this phrase to mean detecting faults on the BES? Since this same wording is not used in defining the relay, can a relay be covered under the standard, but not its control circuitry? For instance, Out of Step Tripping? Over Excitation? Frequency or Voltage Protection on a generator? These relays respond to electrical quantities, but are not applied to detect faults on BES Elements. SMUD believes this interpretation takes us down a very confusing path. SMUD respectively requests the SDT strike the new wording (as seen on the redlined version) in 2.4.1 and 15.3.

Response: Thank you for your comments.

1. DC trip circuit from a sudden pressure relay output to the trip coil of the interrupting device has always been included in the "Control circuitry" portion of a Protection System, and is discussed in Section 15.3 of the PRC-005-2 Supplementary Reference and FAQ document. In regards to including sudden pressure relays themselves, FERC, in Order 758, recently directed NERC to submit an informational filing providing a schedule for addressing sudden pressure relays in PRC-005. The NERC System Protection and Control Subcommittee (SPCS) worked with NERC staff to develop the informational filing, which was filed with FERC on April 12, 2012. The Standards Committee has directed the PSMTSDT to finalize PRC-005-2 and present it to the NERC Board of Trustees for adoption, and concurrent with this posting of PRC_005-2, to post for information a draft SAR for a second phase of Project 2007-17 addressing further modifications to PRC-005-2.

Activities associated with the schedule submitted in the filing will be included in the final SAR to further develop PRC-005. The SDT believes that Protection Systems that trip (or can trip) BES Elements due to a Fault should be included (in the case of a Sudden Pressure Scheme, the control circuitry and DC supply components would apply). The relays mentioned are already covered by the standard, in that they are "Protection Systems that act to trip the generator either directly or via lockout or auxiliary tripping relays."

Organization	Yes or No	Question 4 Comment
Tennessee Valley Authority		1. Regarding the functional test required every 3 months for "unmonitored communication systems" in Table 1-2 of the PRC-005-2 Draft. TVA feels that a Maximum Maintenance Interval for the Functional Test should be every 12 months until auto-checkback has been fully implemented by the utility. 2. The Implementation Plan for PRC-005-2 Step 4 on Page 2 states: "The Implementation Schedule set forth in this document requires that entities develop their revised Protection System Maintenance Program within twelve (12) months following applicable regulatory approvals, or in those jurisdictions where no regulatory approval is required, on the first day of the first calendar quarter twenty-four (24) months following NERC Board of Trustees adoption. This anticipates that it will take approximately twelve (12) months to achieve regulatory approvals following adoption by the NERC Board of Trustees." TVA feels that this is not sufficient time to implement full auto-checkback capability at some utilities. The time schedule of twelve (12) months should be forty-eight (48) months following applicable regulatory approvals. 3. TVA has many excitation transformers directly connected to the generator bus, configured such that a fault on the excitation transformer will cause a generator trip. Is the intent that the revised standard will include these transformers in the applicability? Would they be included by section 4.2.5.1? 4. TVA (Rusty Hardison) has forwarded a slide presentation with six questions to the PRC-005-2 Draft Team requesting consideration as input to the Frequently Asked Questions document accompanying the standard. Thank you for considering.

Response: Thank you for your comments.

1) The SDT believes the four month interval is proper for unmonitored communications systems. The activity related to this interval is to verify basic operating status.

2) The Implementation Plan is intended to facilitate implementation of the standard, not to facilitate modifications to meet the requirements of the standard.

3) The SDT revised Applicability Clause 4.2.5.4 to include excitation transformers connected to the generator bus.

Organization	Yes or No	Question 4 Comment
4) The SDT modified the Supplementary Reference and FAQ document to address these questions.		
Tacoma Public Utilities		1. For components that are part of a time-based PSMP, if correction of Unresolved Maintenance Issues takes place before the maximum maintenance interval expires, is it mandatory to demonstrate (document) these efforts to correct identified Unresolved Maintenance Issues? Is the purpose of Requirement R5 only to avoid compliance jeopardy when an entity discovers a problem during maintenance but cannot correct the problem until after the maximum maintenance interval has expired (as discussed in the Supplemental Reference and FAQ document)? Or, is the purpose also to ensure that all Unresolved Maintenance Issues are documented even if they corrected very quickly and within the maximum maintenance intervals and just considered part of routine maintenance (i.e., Unresolved Maintenance Issues not explicitly documented) in a manner similar to recalibrating a relay? 2. Assume that a component under a time-based PSMP is not considered "monitored" per the PSMP, but in actuality it is. If an alarm comes in, indicating a component problem, would the entity have any additional documentation obligations under PRC-005-2 associated with this alarm, provided that all minimum maintenance activities and maximum maintenance intervals associated with the unmonitored component are satisfied? The concern is that, if there are additional documentation obligations; then many entities may disable monitoring in some cases in order to avoid compliance jeopardy. 3. Assume that an entity treats batteries at certain remote communication sites as if they were applicable to PRC-005-2. These sites are not substations or generating facilities but support the broad communication system, including teleprotection functions. Furthermore, these sites have limited access during some times of the year because of heavy snow or ice. It is conceivable that it may not be possible to meet all minimum maintenance activities or all maximum maintenance intervals (4 and 6 calendar months) unless the site is extensively monitored and/or field personnel expose themselves to hazard. Would any allowances be made in these cases? Would

Organization	Yes or No	Question 4 Comment
		these sites even be applicable to PRC-005-2, since they are not part of a "station" DC supply? 4. It is still unclear whether Section 15.3 permits periodically verifying DC voltage at the actuating device trip terminals as an acceptable method of accomplishing the maintenance activity identified in Table 1-5 for unmonitored control circuitry associated with protective functions. It is recommended that this approach be considered acceptable, provided that auxiliary relays are operated within the maximum maintenance interval. 5. In the Implementation Plan for Requirements R1, R2, and R5, why there is a requirement to "be 100% compliant [with R5] on the first day of the first calendar quarter twelve (12) months following applicable regulatory approvals"? The emphasis of this question is on Requirement R5, which pertains to Unresolved Maintenance Issues. 6. In the Implementation Plan for R3 and R4, to be considered "100% compliant with PRC-005-2," is it only necessary to have completed the applicable minimum maintenance activities one time for the applicable component (which is our assumption)? Or, does being considered 100% compliant under this Implementation Plan imply that two instances of the applicable minimum maintenance activities must have been completed for the applicable component?

Response: Thank you for your comments.

1. The definition of Unresolved Maintenance issue has been revised to specify that it applies to deficiencies that "…cannot be corrected during the maintenance interval..."
2. The SDT believes that as long as all minimum maintenance activities and maximum maintenance intervals associated with a component are completed and documented, no additional documentation obligations are necessary.
3. The SDT does not believe that the scope of the standard refers to communication sites. The SDT believes that a loss of power to the communications systems at a remote site would cause the communications systems associated with protective relays

Organization	Yes or No	Question 4 Comment
to alarm at the substation. At this point, the corrective actions can be initiated. 4. The SDT believes that every trip path from relay to trip coil must be verified. If a trip coil has multiple trip paths, verifying DC voltage at the actuating device would not accomplish the maintenance activity identified in Table 1-5 for unmonitored control circuitry. 5. The SDT believes that the entity be 100% compliant with Requirement R5 on the first day of the first calendar quarter because an Unresolved Maintenance Issue could arise during the first calendar quarter. 6. The Implementation Plan addresses the initial performance of the required activity within the required intervals. The entity should expect to comply with PRC-005-1B until they fully implement PRC-005-2.		
Texas Reliability Entity		1. The Implementation Plan is still overly long and complicated. Registered Entities and Regional Entities will have to track and apply multiple versions of this standard for up to 14 years. It would be preferable to have a much shorter implementation plan, so that only one version of the standard will be applicable at any given time, recognizing that for some Components no action will be required under the standard for a number of years. 2. Referring to R3, R4 and M1 (and other places), it is redundant to add “Protection System” to describe “Components “or “Component Types” based on the “local definitions” provided. Alternatively, the defined term could be changed to “Protection System Component” and used consistently. 3. In Table 1-3, the activity should include verifying that the current and voltage signal values are within tolerances, not just that signal values are present. The minimum activity should include a ratio check and/or burden check of current transformers. Suggest revising to state “Verify that current and/or voltage signal values provided to the protective relays are within the accuracy tolerance of the voltage and current sensing device”. 4. In the VSL for R2, we are assuming that the “4% within three years” is a 4% failure rate based on Attachment A, but that is unclear. We suggest clarifying this language

Organization	Yes or No	Question 4 Comment
		to match Attachment A language. 5. What is the basis for the 4% failure rate limit in Attachment A? It would appear that a 4% failure rate is high for protective relays. Does the SDT have a technical justification supporting the selection of 4% as the applicable limit? 6. In Attachment A, item 4 in the "maintain the technical justification" section needs clarification. It can be assumed that the phrase "for the greater of either the last 30 Components maintained or all Components maintained in the previous year" is referring to Components within a specific Segment, but more specific language may be needed. Also, are the references to "prior year" and "previous year" intended to refer to calendar years or 365 days preceding the analysis? 7. In Attachment A, item 5 in the "maintain the technical justification" section needs clarification. We suggest adding a timeframe for the "experience 4% or more Countable Events" phrase. Does this refer to any 12-month period? Additionally, the determination of a timeframe for "4% of the Segment population" is needed. Example- If there are 100 Components in a performance-based Segment in Year 1 and I add an additional 100 Components in Year 2, is the 4% based on 100 or 200?

Response: Thank you for your comments.

1. The SDT disagrees, and believes that having a shorter implementation plan would not allow entities to complete the requirements. The Implementation Plan is designed to allow an entity to systematically implement PRC-005-2 such that an ongoing program may be facilitated.
2. Strictly speaking, you are correct. However, the SDT has elected to include the emphasis, "Protection System" in these locations to help clarify that such components are only in-scope where they are part of the "Protection System."
3. The SDT disagrees. Verify is defined as, "Determining that the component is functioning correctly." If the signals to the relay are beyond tolerance, the component is not functioning correctly.
4. The SDT agrees and has corrected the Requirement R2 VSL to indicate "…no more than…"

Organization	Yes or No	Question 4 Comment
5. The SDT chose 4% because an entity with a small population (30 units) would have to adjust its time intervals between maintenance if more than one countable event was found to have occurred during the last analysis period. A smaller percentage would require that entity to adjust the time interval between maintenance activities if even one unit is found out of tolerance or causes a Misoperation (see Supplemental Reference and FAQ Section 9.1). 6. The SDT affirms that all references to "prior year"and "previous year" refer to "calendar year." 7. The time frame refers to a calendar year. The 4% failure rate is determined from those Component segments tested in the previous calendar year.		
TransAlta Centralia Generation LLC		1.3 Evidence Retention. The standard said: For Requirement R2, R3, R4 and R5, the Transmission Owner, Generator Owner and Distribution Provider shall each keep documentation of the two most recent performances of each distinct maintenance. How to count" the most recent performance ". Is this Standard going forward basis? For some of the protection system component, the maximum maintenance interval is 12 years (such as CT, PT or microprocessor relay) on the standard, how to count the two most recent performance?
Response: Thank you for your comments. For a Compliance Monitor to be assured of compliance, the SDT believes the Compliance Monitor will need the data of the most recent performance of the maintenance, as well as the data of the preceding maintenance to validate that entities have been in compliance since the last audit (or currently, since the beginning of mandatory compliance). The SDT has specified the data retention in the posted standard to establish this level of documentation, which is consistent with the current practices of several regional entities.		
PacifiCorp		1: The definition of "Protection System" in this version of PRC-005-2 includes "station dc supply associated with protective functions..." as a Protection System component. Page 83 of the FAQ document accompanying the draft standard provides further clarification that the batteries covered under PRC-005-2 are those that "supply the trip current to the trip coils of the interrupting devices that are a part of the Protection System." This statement in the FAQ is much more limiting than the definition of Protection System and may create confusion concerning registered entities' compliance obligations. For example, a registered entity may have one

Organization	Yes or No	Question 4 Comment
		battery / charger system in a station that supplies DC voltage to communication equipment, including that utilized in transfer trip communication, while a separate battery (typically operating at a different DC voltage) is utilized for relay / trip coil operation. In this case, it is unclear whether the battery / charger system utilized for transfer trip communication is subject to the requirements of the standard. PacifiCorp recommends that NERC or the SDT reconcile this apparent inconsistency in the FAQ document. 2: In Tables 1-4(a) thru 1-4(d), the maximum maintenance interval of four calendar months includes inspection "for unintentional grounds." PacifiCorp seeks clarification on whether this maintenance activity is intended to target the detection of unintentional grounds on the battery bank / rack itself, or a ground located anywhere on the entire DC wiring system. 3: The Violation Severity Level ("VSL") for R5 - which ranges from a failure to correct 5 or less ("Lower" VSL) to greater than 15 ("Severe" VSL) Unresolved Maintenance Issues - fails to adequately account for the cumulative amount of equipment a registered entity is required to maintain pursuant to PRC-005-2. A better alternative approach may be to base the VSL on the cumulative percentage of Unresolved Maintenance Issues that an entity fails to address and correct. Such an approach would be more consistent with the VSLs for R3 and R4, which are based on a percentage of the total scheduled maintenance. This approach more fairly and reasonably addresses the covered maintenance activities relative to the approach in the VSLs for R5, which are based on a strict count and therefore independent of the cumulative amount of maintenance activities performed by a registered entity. PacifiCorp recommends that the SDT develop an alternative method for determining VSLs for R5 that reflects the scope of an entity's maintenance activities and the resulting Unresolved Maintenance Issues managed by an entity.

Response: Thank you for your comments.

1. The SDT believes the term "Station dc supply" is clearly defined within the standard, and that the definition should be

Organization	Yes or No	Question 4 Comment
considered when applying the term. Your reference to Page 83 of the Supplemental Reference and FAQ Document clarifies that Table 1-4 of the standard refers to Station Batteries only, and not Communications Site Batteries. 2. The SDT believes the inspection for unintentional grounds applies to the entire DC wiring system. 3. The SDT disagrees and believes the VSL's for Unresolved Maintenance Issues should be a numeric quantity, and not a percentage.		
Essential Power, LLC		1. This DRAFT Standard is written as a prescriptive 'procedure' and not as a 'Standard'. The SDT should revise the Standard to address the goal, or intent, rather prescribing how entities should meet the Standard. 2. Inclusion of non-BES elements within the Standard falls outside of NERC's jurisdiction, as defined in the EPA 2005. The SDT should remove these elements from the Standard. 3. The inclusion of dc circuitry for equipment that is itself not covered under the Standard is not logical and does not contribute to reliability. The SDT should remove this from the Standard.
Response: Thank you for your comments. 1. The SDT believes the standard describes the desired outcomes and is not a 'prescriptive procedure'. The entity is free to determine what maintenance methods are best suited for its program. 2. FPA Section 215(a) Definitions section defines "bulk-power system as … facilities and control systems necessary for operating an interconnected electric energy transmission network (or any portion thereof)." That definition then is limited by a later statement which adds the term bulk-power system "does not include facilities used in the local distribution of electric energy." Facilities such as those to which you refer are not solely "used in the local distribution of electric energy," despite their location on local distribution networks. Further, if these facilities were not covered by the reliability standards, reliability gaps would exist.		

Organization	Yes or No	Question 4 Comment
3. The SDT believes that Protection Systems that trip (or can trip) for Faults on the BES should be included. This position is consistent with the SAR for Project 2007-17, and with the position of FERC staff.		
MRO NSRF		1. Article 4.2.1 - The NSRF believes that this article should be revised to say "Protection Systems installed for the purpose of protecting BES Elements only and detecting Faults on BES Elements. Protection Systems designed to protect non-BES elements that incidentally open 100 kV and greater breakers are excluded from the scope of PRC-005-2". This makes it very clear what is included in the scope of the Testing and Maintenance program and what is not. 2. Change the text of "Standard PRC-005-2 - Protection System Maintenance" Table 1-5 on page 21, Row 1, Column 3 to:"Verify that a trip coil is able to operate the circuit breaker, interrupting device, or mitigating device." Or alternately, "Electrically operate each interrupting device every 6 years "Trip coils are designed to be energized no longer than the breaker opening time (3-5 cycles). They are robust devices that will successfully operate the breaker for 5,000-10,000 electrical operations. The most likely source of trip coil failure is the breaker operating mechanism binding, thereby preventing the breaker auxiliary stack from opening and keeping the trip coil energized for too long of a time period. Therefore, trip coil failure is a function of the breaker mechanism failure. Exercising the breakers and circuit switchers is an excellent practice. Exercising the interrupting devices would help eliminate mechanism binding, reducing the chance that the trip coils are energized too long. The language as currently written in Table 1-5 row 1, will also have the unintentional effect of changing an entities existing interrupting device maintenance interval (essentially driving interrupting device testing to a less than 6 year cycle).The NSRF believes that as written the testing of "each" trip coil will result in the increased amount of time that the BES is in a less reliable system configuration. The NSRF hopes that the

Organization	Yes or No	Question 4 Comment
		SDT will consider these changes. 3. The NSRF recommends the statement "Excluding distributed UFLS and distributed UVLS (see Table 3)" be added to the top of Table 1-4(f). 4. Table 3. There will be many DP's that have distributed UFLS (or UVLS) solely on the distribution system (less than 100 kV). The only item these DP's will have to verify under Table 3 "Protection System dc supply" is the Protection System dc supply voltage. Yet, the definition of Protection System, as it relates to dc supply is "Station dc supply associated with protective functions (including batteries, battery chargers, and non-battery-based dc supply)". Our interpretation of Table 3 and Section 15.7 of the Supplementary Reference & FAQ document is that a DP need only check the dc supply voltage at the terminals of the relays. If that is the SDT interpretation as well, we recommend revising Table 3 of the standard to reflect that. Table 3 contains issues that need to be addressed in a similar fashion as discussed for non-UFLS and non-UVLS systems, i.e. Table 1-1. Comparison to independent sources is only one way to check for a reliable AC measuring device. It also appears that monitoring capabilities are not being given any credit in regards to the AC sensing devices, DC supply, or control circuitry themselves. There should be no difference in the way these systems are treated compared to BES Protection Systems. 5. In Section D Compliance, Article 1.3, paragraph 4 the standard requires documentation be kept for the ". . . two most recent performances of each distinct maintenance activity. . .". This needs to clarify that it cannot go back before 06/18/07, as evidenced by the suspension of CAN-0008. Also with some of the testing intervals being 12 years that would dictate a Registered Entity maintain 24 years of records, which is unreasonable. This article should be revised to have documentation for the most current testing interval, if after

Organization	Yes or No	Question 4 Comment
		06/18/07. 6. It is understood that lockout relay testing is important as unexercised lockouts can stick and cause regional outages as experienced at Westwing. However, lockout testing by itself is risky and can lead to local outages. If Registered Entities are required to take on the additional risk of testing lockout relays, dispensation must be granted for outages caused by those tests. The following statement should be included in the standard "No enforcement actions or penalties will result from outages caused by relay testing unless a Registered Entity shows a history of 3 or more test related outages per year for 5 years." 7. In the VSL for Table 4 it seems that the phrase "5% or less" should be "not more than 5%". With the original language it seems like an entity could be found to have an R4 lower VSL violation for "failure" of zero meaning they had done no testing. This VSL is written in the negative and should be rewritten in the positive. 8. The drafting team needs to clarify "maintenance summaries" as stated in Measure M3. This is an ambiguous term that could be interpreted differently amongst entities. If a term such as 'summary' is to be utilized within the standard, a clear definition of what the term is, what it pertains to, where it is located, etc. needs to be included. The NSRF recommends that "maintenance summaries" be defined and included in the "Definition of Terms used in Standard" section. 9. Footnote 1 in the Table sections would be much improved by inserting an example similar to what was provided in Section 8.4 of the Supplemental Reference and FAQ document 10. Additional methods of verification should be allowed for AC measurement monitoring other than simply performing comparison to an independent source. For example, a sudden rate of change in calculated relay MW analog value and/or

Organization	Yes or No	Question 4 Comment
		3Io calculation would give way towards a bad CT and/or path. Loss of potential logic is available in most microprocessor relays today, which is very reliable logic for determining PT/CCVT issues. Consideration should be given to utilities that are capable of performing this type of monitoring in order to allow them to reach that next level of attributes. 11. Please clarify why input/output verification is excluded from the highest level of monitoring related to communications systems (Table 1-2). The way the monitoring attribute is listed does not provide that these will operate when needed. Recommend language be added similar to the monitoring of inputs and outputs described in the relay section (Table 1-1). Table 1-3 should take into account the same concepts mentioned above in regards to AC measurement verification in Table 1-1. There are alternative ways to verify these quantities while still ensuring reliable operation. As such, companies should be given the opportunity to implement them. Additionally, credit should be given to circuit monitoring and alarming in AC circuits with electromechanical relays. If a transducer/alarming relay is placed in the circuit and monitoring is alarmed appropriately, the health of the AC sensing device can be determined. This would essentially provide the same level assurance as mentioned with the microprocessor relays. 12. Clarification is needed on the last row of Table 1-5. Does integrity entail monitoring and alarming of every individual path, if necessary, or is overall integrity sufficient? This statement is once again open to interpretation and leaves the entity at the mercy of the auditor.

Response: Thank you for your comments.

1. The SDT believes that the Applicability, as stated in PRC-005-2, is correct and supports the reliability of the BES. Please see Section 2.3 of the Supplementary Reference and FAQ document for additional discussion.

Organization	Yes or No	Question 4 Comment
		2. The SDT sees no appreciable change or improvement in the standard with your proposed change, and respectfully declines to modify the draft. 3. The SDT believes that the suggested change would be redundant to the current text of the Table 1-4(f) header. 4. This is an intentional difference between distributed UFLS/UVLS and the remainder of the Protection Systems addressed within the standard because of the distributed nature of distributed UFLS/UVLS and because these devices are usually tripping distribution System Elements. If an entity were to install monitoring equipment for verification of Station DC supply voltage, or other facets of the reduced maintenance activities regarding distributed UFLS/UFLS, Table 1-3 describes the adjusted activities permitted relative to that monitoring. 5. The SDT believes the Implementation Plan is descriptive in that an entity will be 100% compliant with PRC-005-2 when one maintenance period has elapsed. On a continuing basis, in order that a Compliance Monitor can be assured of compliance, the SDT believes that the Compliance Monitor will need the data of the most recent performance of the maintenance, as well as the data of the preceding one to validate that entities have been in compliance since the last audit. The SDT has specified the data retention in the posted standard to establish this level of documentation, which is consistent with the current practices of several regional entities. 6. The SDT believes it is left to the entity to determine how to align the requirements of the standard with requirements of other regulations and with operational concerns. 7. The VSL Guidelines, developed in accordance with the FERC VSL Order establish the Lower VSL for stepped VSLs as “5% or less,” the Medium VSL as “more than 5% but less than (or equal to) 10%,” the High VSL as “more than 10% up to (and including) 15%,” and the Severe VSL as “more than 15%.” 8. The SDT believes defining “Maintenance Summaries” is unnecessary. The measure simply lists some types of evidence to demonstrate that an entity has maintained its Protection System in accordance with the standard. 9. The SDT believes that the footnote is adequate, but recognizes that some entities may desire the additional details that are included in Section 8.4 of the Supplementary Reference and FAQ document. 10. The SDT believes that the methods that you suggest would be useful for meeting the 12-calendar-year interval for unmonitored Components. However, for monitored systems with no physical maintenance activities, the SDT is concerned about the quality of some of the methods suggested.

Organization	Yes or No	Question 4 Comment
11. The SDT has modified the last row of Table 1-2 to be similar to the corresponding row of Table 1-1. 12. Section 15.3 of the Supplemental Reference and FAQ provides the following guidance: "Monitoring of integrity means to monitor for continuity and/or presence of voltage on each trip path."		
Duke Energy		1. Duke Energy votes "Negative" because we strongly object to the wording in the Applicability section 4.2.1. We believe that the wording change to PRC-005-2 draft 4 after the Successive Ballot but prior to the Recirculation Ballot expanded the reach of the standard to relaying schemes that detect faults on the BES but are not intended to provide protection for the BES. FERC's September 26, 2011 Order in Docket No. RD11-5 approved NERC's interpretation of PRC-005-1 R1 and R2, stating: "The interpretation clarifies that the Requirements are "applicable to any Protection System that is installed for the purpose of detecting faults on transmission elements (lines, buses, transformers, etc.) identified as being included in the [BES] and trips an interrupting device that interrupts current supplied directly from the BES." This interpretation is consistent with the Commission's understanding that a "transmission Protection System" is installed for the purpose of detecting and isolating faults affecting the reliability of the bulk electric system through the use of current interrupting devices." The SDT's response to our comment directed us to Section 2.3 of the Supplementary Reference and FAQ document which states "There should be no ambiguity: if the element is a BES element then the Protection System protecting that element should be included within this Standard." We agree with that statement, but question why the SDT insists on changing Section 4.2.1 to include devices that detect Faults on the BES but which do not provide protection for the BES? Duke Energy's standard protection scheme for dispersed generation at retail stations would become subject to the standard due to the changes in section 4.2.1. These protection schemes are designed to detect faults on the BES, but do not operate

Organization	Yes or No	Question 4 Comment
		BES elements nor do they interrupt network current flow from the BES. In the most recent draft, the relays, current transformers, potential transformers, trip paths, auxiliary relays, batteries, and communication equipment associated with the dispersed generation protection scheme would be subject to the requirements in PRC-005-2. Previous drafts of the standard would not have required Duke Energy to maintain the protection system components associated with dispersed generation schemes at retail stations in accordance to the requirements in PRC-005-2. The new wording in section 4.2.1 would add significant O&M costs and resource constraints due to the inclusion of protection system devices at retail stations without increasing the reliability of the BES. Duke Energy does not believe it was the intent of the standard to include elements that did not have an impact on the reliability of the BES. Duke Energy would prefer the following definition: Protection Systems that are installed for the purpose of protecting BES Elements (lines, buses, transformers, etc.)". 2. We also note that the Lower VSLs for R3 and R4 include violations for "5% or less," and R5 for "5 or less" which mandates perfection. We believe that the consequence of a very small number of components having a missed or late maintenance activity is insignificant to BES reliability." We suggest that a range of 0.5% to 5% would be more reasonable.

Response: Thank you for your comments.

1. The SDT believes that the Applicability, as stated in PRC-005-2, is correct and supports the reliability of the BES. The SDT observes that the approved Interpretation addresses the term "transmission Protection System," and notes that this term is not used within PRC-005-2; thus, the interpretation does not apply to PRC-005-2. PRC-005-2 specifically addresses "Protection Systems that are installed for the purpose of detecting Faults on BES Elements." Please see Section 2.3 of the Supplementary Reference and FAQ document for additional discussion.
2. NERC criteria for VSLs do not currently permit them to allow some level of non-performance without being in violation. Much

Organization	Yes or No	Question 4 Comment
of this comment appears to be related to the technical content of the standard, not on the VRFs or VSLs.		
PPL Supply NERC Registered Organizations		Although we have provided some suggested changes in these comments, PPL Generation entities voted in favor of this version. We thank the SDT for the effort on this project and believe that the SDT has developed a revision that improves on many aspects of the existing version of PRC-005.
Response: The SDT thanks you for your affirmative vote.		
ExxonMobil Research and Engineering		As written, the current draft of PRC-005-2 discriminates against smaller entities that do not have a population size of 60 for each component type. Historical records provide an accurate account of how specific components have performed in their installed environment. For a set population size, increasing the number of historical data points should improve the accuracy of an entity's calculated mean time between failures, so, if you increase the period over which the historical data must be evaluated, you can compensate for a smaller segment population size. The SDT's current draft prevents smaller entities from using a larger historical data set to make up for a smaller population size when developing a performance based protective system maintenance and testing program. The SDT should reconsider allowing smaller entities to use historical records that extend for period longer than a single year in the development of a performance based program.
Response: Thank you for your comment. Small entities are permitted to aggregate their components with similar components of other entities to meet the component populations, as long as the programs are (and remain) similar – See Section 9 of the Supplementary Reference and FAQ document and the associated footnote to Attachment A. Decreasing the Component population below the requirements of Attachment A will result in an unsound program due to Component populations that are not statistically significant. The Supplementary Reference and FAQ document states, "Any population segment must be comprised of at least 60 individual units; if any asset owner opts for PBM but does not own 60 units to comprise a population then that asset owner may combine data from other asset owners until the needed 60 units is aggregated." Historical data may be good for trending, but may not be suitable for judging current maintenance program effectiveness.		
American Transmission Company, LLC		ATC recommends that the SDT change the text of "Standard PRC-005-2 - Protection System Maintenance" Table 1-5 on page 21, Row 1, Column 3 to:"Verify that a trip coil

Organization	Yes or No	Question 4 Comment
		is able to operate the circuit breaker, interrupting device, or mitigating device." Or alternately, "Electrically operate each interrupting device every 6 years "Basis for the change: Trip coils are designed to be energized no longer than the breaker opening time (3-5 cycles). They are robust devices that will successfully operate the breaker for 5,000-10,000 electrical operations. The most likely source of trip coil failure is the breaker operating mechanism binding, thereby preventing the breaker auxiliary stack from opening and keeping the trip coil energized for too long of a time period. Therefore, trip coil failure is a function of the breaker mechanism failure. Exercising the breakers and circuit switchers is an excellent practice. ATC would encourage language that would suggest this task be done every 2 years, not to exceed 3 years. Exercising the interrupting devices would help eliminate mechanism binding, reducing the chance that the trip coils are energized too long. The language, as currently written in Table 1-5 row 1, will also have the unintentional effect of changing an entities existing interrupting device maintenance interval (essentially driving interrupting device testing to a less than 6 year cycle).ATC continues to recommend a negative ballot since we believe that the testing of "each" trip coil will result in the increased amount of time the BES is in a less intact system configuration. ATC hopes that the SDT will consider these changes.
Response: Thank you for your comment. The SDT sees no appreciable change or improvement in the standard with your proposed change, and respectfully declines to modify the draft.		
Bonneville Power Administration		BPA believes that PRC-005-2 achieves the goal of reducing redundancy and overlap within the PRC standards by consolidating four existing standards into one. BPA's comments are focused on improving the clarity and audit-ability of the proposed standard. 1. Regarding Section D1.3 "Evidence Retention", BPA suggests that the entire first paragraph be removed because for all the instances that follow the first paragraph there is a requirement to keep evidence obtained since the last audit. Therefore, there are no instances where the evidence retention period is shorter

Organization	Yes or No	Question 4 Comment
		than the time since the last audit, and the first paragraph is not necessary. Furthermore, the first paragraph introduces the idea of "other evidence" for which there is no explanation. It is unclear what could be used for evidence other than the items described in the 2. Measures. The idea of "other evidence" should not be introduced without an explanation of what that evidence might be, so this is another reason for removing the first paragraph. 3. Regarding requirements R2 and R4, BPA believes that these two requirements should be combined into a single requirement with two parts. Since both of these requirements deal with performance-based maintenance, it would simplify the standard and improve the flow if they were to be combined. 4. Regarding Table 1-4(f), it is unclear if all of the conditions on the left side need to be met before any of the reduced maintenance activities on the right side are allowed, or if there is a one-on-one relationship between an item on the left and the adjacent item on the right. BPA suggests that the table be reconfigured to clarify the relationship between the conditions on the left and the activities on the right.

Response: Thank you for your comments and support.

1. The SDT has been advised to include this paragraph as the first paragraph in the evidence retention.
2. The list of possible evidence with the measures is not intended to provide a comprehensive list of all type of evidence that may be useful. The entity is provided the flexibility to use other evidence that they deem relevant.
3. Requirements R2 and R4 are separate, as they address two specific requirements; one to establish a performance-based PSMP according to criteria, and the other to implement that PSMP.
4. There is a one-to-one correspondence between the right and left columns, and the SDT believes that further clarification is unnecessary.

Organization	Yes or No	Question 4 Comment
CenterPoint Energy		1. CenterPoint Energy recommends retaining an option to utilize technology for monitoring trip coil continuity as an alternative to the maintenance activity in Table 1-5. The Table 1-5 requirement to "Verify that each trip coil is able to operate the circuit breaker, interrupting device, or mitigating devices (regardless of any monitoring of the control circuitry)" appears to address breaker maintenance, instead of Protection System Controls. In the Supplementary Reference and FAQ, monitoring is described as greatly reducing the time between a component failure and discovery of that failure. 2. For the “Control circuitry between the UFLS or UVLS relays and electromechanical lockout and/or tripping auxiliary devices (Excludes non-BES trip coils)”, the Table 3 requirement is to “Verify the path from the relay to the lockout and/or tripping auxiliary relay (including essential supervisory logic)” every 12 calendar years. CenterPoint Energy recommends this requirement be revised to “No periodic maintenance specified”. CenterPoint Energy believes this to be a commissioning task, not a preventive maintenance task. A preventive maintenance task, such as the above, is unnecessary for distributed UFLS and UVLS system components. The overriding performance, or “risk-based”, NERC Reliability Standards for UFLS are PRC-006 and PRC-007 where an entity is required to shed their obligated firm load amount. 3. For the “Unmonitored control circuitry associated with protective functions inclusive of all auxiliary relays”, the Table 1-5 requirement is to “Verify all paths of the trip circuits inclusive of all auxiliary relays through the trip coil(s) of the circuit breakers or other interrupting devices” every 12 calendar years. CenterPoint Energy recommends this requirement be revised to “No periodic maintenance specified”. CenterPoint Energy believes that verifying all tripping paths is a commissioning task, not a preventive maintenance task. Alternatively,

Organization	Yes or No	Question 4 Comment
		CenterPoint Energy recommends specifically excluding panel wiring and requiring only cabling between panels and interrupting devices be verified. Requiring trip path verification to include panel wiring complicates maintenance while focusing on a component that is not subject to age-related degradation in addition to, historically, not being a source of protection system failures. This type of testing can negatively impact BES system reliability with the outages that are required and by exposing the electric system to incorrect tripping.
Response: Thank you for your comments. 1. While trip coil monitors may demonstrate continuity, they do not fully demonstrate operability. 2. The SDT disagrees regarding UFLS and UFLS-related control circuitry maintenance, and believes that the maintenance specified is appropriate. 3. The SDT disagrees with your proposal regarding Table 1-5 for dc control circuits and auxiliary relays which may be a critical part of a tripping scheme.		
Central Lincoln		Central Lincoln appreciates the good work the SDT has done. We believe this particular team has actually listened to our comments and made changes where needed. Thanks.
Response: The SDT thanks you for your affirmative vote.		
Constellation/Exelon		Constellation/Exelon thanks the drafting team for the hard work on the PRC-005 standard. The standard language made significant progress; however, below are outstanding issues of concern: Table 1-3 1. Table 1-3 should not include current transformers (CTs). The tests mandated by this draft seeks to measure that a signal is “provided to the protective relay” however, for CT’s this test merely confirms that a signal is sent, not that it reached the correct protective relay.

Organization	Yes or No	Question 4 Comment
		2. The maintenance activity in Table 1-3 for PTs and CTs as they relate to electro mechanical relays should be left to the discretion of the Generator Owner. In order to meet the required activity specified in PRC-005-2 draft 2 Table 1-3, the generating unit would be required to take readings with meters while the unit is operating. This practice introduces a risk of tripping the unit inadvertently. The risk of tripping the unit while performing this maintenance activity is contrary to the intended purpose of PRC-005 and introduces a potentially adverse affect on the reliability of the BES. Such testing is not recommended by suppliers. Battery Testing 3. The Tables describing battery testing could be consolidated into less granular breakdown and thus alleviate some of the associated compliance burden and avoid potential confusion. 4. Further to battery testing, given the quantity of batteries and the shorter interval cycles, the four calendar month requirement for batteries is too rigid as a firm four months. Similar to how a definition of annual can have a boundary such as within 9 to 16 months; battery testing intervals should allow a boundary such as "three times per year and not more than 6 months between each and average intervals not exceeding four months." 5. Please confirm that references throughout Standard to battery/batteries relate to the entire battery bank and not to the individual battery cells unless specifically mentioned. Similarly, battery charger maintenance activity should relate to the battery charger in its entirety and not to individual parts or components. Auto Synchronizing Systems and Relays 6. The drafting team should clarify in the language that testing of auto synchronizing

Organization	Yes or No	Question 4 Comment
		systems and relays is excluded. Applicability 7. To make 4.2.5.4 under Facilities more clear, please remove the term “generator-connected”. 8. When the SDT changed the original PRC-005 applicability language from “...affecting the reliability of the BES...” to the new 4.2.1 language “...that are installed for the purpose of detecting faults on BES elements (lines, buses, transformers, etc.)”, they opted to exclude the second half of this sentence taken from the PRC-005-1a Interpretation, which read “...and trips an interrupting device that interrupts current supplied directly from the BES.” By doing so, the SDT failed to recognize that some Protection Systems can be responsive to faults on the BES, but still have no effect on the reliability of the BES. The change in 4.2.1 may unintentionally expand the scope of PRC-005.Depending on how Section 4.2.1 is interpreted, it could create a perverse incentive to disable, or not apply, reverse directional protection on the secondary (at voltages less than 100kV) of radially connected load-serving transformers. Such relaying typically uses available units in a multifunction device, and while not critically necessary for fault clearing, it is applied because it adds a benefit at no incremental cost with minimal security risk, and it will not interrupt a BES element if it operates insecurely. It also improves reliability to connected distribution load, in the event a BES transmission line faults during abnormal switching, by coordinating with non-directional overcurrent relays that would otherwise interrupt the entire load. Furthermore such directional relaying would only operate after the faulted BES line is already removed from any connection at BES voltages via its high voltage (>100kV) circuit breakers. Viewed in an expansive way, the proposed 4.2.1

Organization	Yes or No	Question 4 Comment
		language could bring into scope these relays as well as tripping circuits of distribution voltage circuit breakers that are normally operated in a radial configuration. It would be reasonable for a TO to disable this relaying, rather than accept these consequences. In the previous comment period (Sept 2011), industry raised similar concerns and to most of the commenters, the SDT responded with the following statement:"The SDT believes that the Applicability as stated in PRC-005-2 is correct and that it supports the reliability of the BES. The SDT observes that the approved Interpretation addresses the term, "transmission Protection System", and notes that this term is not used within PRC-005-2; thus the interpretation does not apply to PRC-005-2. PRC-005-2 specifically addresses "Protection Systems that are installed for the purpose of detecting faults on BES Elements." Please see Section 2.3 of the Supplementary Reference and FAQ document for additional discussion." Unfortunately, this response fails to address the concerns raised above. Entergy previously suggested the following language for 4.2.1:"Protection Systems that are installed for the purpose of detecting faults on BES Elements (lines, buses, transformers, etc.) and trips an interrupting device that interrupts current supplied directly from the BES Elements."This language is appropriate and addresses industry concerns. We ask that the SDT adopt this language as Section 4.2.1. Evidence Retention 9. It is not necessary and is undesirable to reiterate the language from the NERC Rules of Procedure (Appendix 4C 3.1.4.2) in the standard. Stating such language in two places is redundant and future changes to this section of the Rules of Procedure language will create compliance conflict. While this language may be recommended for inclusion as new boilerplate-type language for NERC standards

Organization	Yes or No	Question 4 Comment
		and may be used in other recently revised standards, the potential conflict should be taken into account and avoided for PRC-005. The first paragraph in section 1.3 should be removed. 10. Further, the standard language should dictate data retention relevant to the standard activities and not merely default to the time period in between audits. The Rules of Procedure language enables CEAs to confirm compliance for the full audit period, but the Standard retention language allow for a more reasoned obligation for evidence retention. Specific to this standard, two or three years of evidence for certain components, such as battery tests, is sufficient to demonstrate an entity's PSMP program. On a positive note, standardizing the requested evidence information is helpful.

Response: Thank you for your comments.

1. Regarding current transformers, the SDT disagrees, and notes that the table specifies that the entity verify that the signal is provided to the relay.
2. Regarding testing for currents or potentials behind a Generator Operator's electromechanical relay panel, the SDT believes that it is possible during a 12-year interval to find a reasonably low-risk opportunity to perform the required test. Please refer to Section 15.2.1 of the Supplementary Reference and FAQ document for a discussion of this topic.
3. The existing battery tables have evolved such that entities may easily locate the specific table that applies to the technology being used in order to improve clarity and avoid confusion.
4. Regarding battery testing, the SDT believes that sufficient industry expertise supports a four-month interval requirement.
5. The SDT confirms that most of the battery requirements apply to the entire battery bank, and not necessarily to each battery jar or cell; the same is true for battery chargers. Those requirements specific to individual cells are clearly indicated.
6. Automatic synchronizing relays (which generally close circuit breakers, rather than trip them) are not covered by the Applicability.
7. The generator-connected station service transformers are often connected to the generator bus directly without an interposing breaker; thus, the Protection Systems on these transformers will trip the generator, as stated in Applicability 4.2.5.1.
8. The SDT believes that the Applicability, as stated in PRC-005-2, is correct and supports the reliability of the BES. The SDT observes

Organization	Yes or No	Question 4 Comment
that the approved Interpretation addresses the term, "transmission Protection System," and notes that this term is not used within PRC-005-2; thus, the interpretation does not apply to PRC-005-2. PRC-005-2 specifically addresses "Protection Systems that are installed for the purpose of detecting Faults on BES Elements." Please see Section 2.3 of the Supplementary Reference Document for additional discussion. 9. The SDT has been advised to include this paragraph as the first paragraph in the Evidence Retention section. 10. For the Compliance Monitoring Authority to be confident that the corrective action is being implemented, the entity should expect to demonstrate progress toward correcting the Unresolved Maintenance Issue, such as the evidence suggested in Measure M5 (with additional suggested evidence added). The SDT has specified the data retention in the posted standard to establish this level of documentation, which is consistent with the current practices of several regional entities.		
DTE Energy		1. DECo does not agree with the 6 year interval for the majority of the Protection System components. There are not sufficient problems found on routine maintenance based on a 10 year interval that would justify that significant of a reduction in the maintenance interval. 2. Also, with respect the station batteries specifically, station batteries, DECo recommends the elimination of the 4 month inspection as annual inspections have been sufficient for early diagnosis of potential issues. Advanced monitoring is not practical at this time as it does not appear that the technology required to forgo the 4 month inspection is readily available.
Response: Thank you for your comments. 1. The SDT believes the intervals and activities specified are technically effective, in a fashion that may be consistently monitored for compliance. It is left to the entity to determine how to align these requirements with requirements of other regulations and with operational concerns. If the relevant components are monitored, more lengthy intervals may be utilized. Performance-based maintenance is an option to increase the intervals, if the performance of these devices supports those intervals. 2. Regarding battery testing, the SDT believes that sufficient industry expertise supports a four-month interval requirement.		
FirstEnergy		FE asks that the team clarify the intent of certain aspects of the applicability section:

Organization	Yes or No	Question 4 Comment
		1. Sec. 4.2.5.4 - For transformers supplying unit auxiliaries, protective functions that provide for transferring of auxiliaries without tripping the generating unit should not be included. Also, we believe that the term "station service transformer" is being used inaccurately. As currently written, the section includes all the protection systems for station service transformers for generators that are a part of the BES. It states, “Protection Systems for generator-connected station service transformers for generators that are part of the BES.” Generating facilities may have transfer schemes on the auxiliary transformer to transfer equipment to a reserve transformer instead of tripping the unit. These protection systems should not be included in the Facilities for PRC-005-2, since the BES is not affected. But since a station service transformer, by definition (IEEE Std. 505), is "a transformer that supplies power from a station high voltage bus to the station auxiliaries and also to the unit auxiliaries during unit startup or shutdown or when the unit auxiliaries transformer is not available, or both." [Ed. note: a.k.a. Start-Up Transformer or Cranker], the terminology "generator-connected station service transformer" is confusing and easily subject to misinterpretation. 2. Also, there needs to be consistency of use of terms between the standard and its Supplementary Reference document. On pages 32 and 33 of the FAQ, the following questions and their respective answers should be consistent with use of terms and replace “station service” with “auxiliary” as follows: FAQ Question - Please provide a sample list of devices or systems that must be verified in a generator, generator step-up transformer, and generator connected auxiliary transformer to meet the requirements of this Maintenance Standard.FAQ Question - In the case where a plant does not have a generator connected auxiliary transformer such that it is normally fed from a system connected

Organization	Yes or No	Question 4 Comment
		auxiliary transformer, is it still the drafting team's intent to exclude the protection systems for these system connected auxiliary transformers from scope even when the loss of the normal (system connected) auxiliary transformer will result in a trip of a BES generating facility? Therefore, for consistency between the reference FAQ document and the standard, we suggest that "station service" be replaced with "auxiliary" in 4.2.5.4 and read as follows: "Protection Systems for generator-connected auxiliary transformers used on generators which are part of the BES, that act to trip the generator either directly or via lockout or tripping auxiliary relays."
Response: Thank you for your comments. 1. Applicability Section 4.2.5.4 specifically addresses the Protection Systems that act to trip the generator, and the "station service transformer" term seems to be the most consistently-used term for this application. 2. The SDT modified the Supplementary Reference and FAQ document for consistency with the standard.		
Kansas City Power & Light		1. For clarity, change the text of "Standard PRC-005-2 - Protection System Maintenance" Table 1-5 on page 21, Row 1, Column 3 to: "Verify that each a trip coil is able to operate the circuit breaker, interrupting device, or mitigating device.". Or alternately, "Electrically operate each interrupting device every 6 years". 2. Countable Event as proposed is somewhat unclear. Recommend the following language: Countable Event - A Component which has failed and requires repair or replacement, any condition discovered during the maintenance activities in Tables 1-1 through 1-5 and Table 3 which requires corrective action, or a Misoperation attributed to hardware failure or calibration failure. Misoperations due to any other reason are not included in Countable Events.

Organization	Yes or No	Question 4 Comment
Response: Thank you for your comments. 1. The SDT believes it is important that each individual trip coil be verified. 2. The SDT does not believe that the changes you suggest improve the standard.		
BAE Batteries USA		Major comments have been addressed in Question 3.
Manitoba Hydro		Manitoba Hydro is voting negative for the following reasons: 1 - Battery inspection and verification interval - Manitoba Hydro maintains that the battery inspection interval should be extended to 6 months. The 4 month interval is too frequent based on our experience and while IEEE std 450 (which seems to be the basis for table 1-4) does recommend intervals, it also states that users should evaluate these recommendations against their own operating experience. Manitoba Hydro has more than ten years of experience using its existing battery inspection intervals and Manitoba Hydro's reliability data has proven that the 6 month inspection interval is suitable for Manitoba Hydro. Manitoba Hydro's battery maintenance tasks were derived from a reliability study of Manitoba Hydro stationary batteries, and the tasks and intervals are suitable given Manitoba Hydro's installed plant, design criteria, climate, and reliability performance. A more frequent inspection interval might be more suitable to specific utilities with material differences in climate, design, installed apparatus, and performance, but it is not suitable for Manitoba Hydro and may be more than is required for many other utilities. To use a more frequent inspection interval would penalize Manitoba Hydro which has been diligently performing battery inspections for many years, with no resulting increase in reliability. It would also potentially adversely affect reliability by diverting resources away from projects that are critical to reliability to meet this maintenance interval. In addition, the 4 month time period proposed for basic battery verification and inspection interval is not aligned with the more detailed 18 month battery verification and inspection interval which will result in additional and unnecessary site visits and maintenance activities. As well, Manitoba Hydro does not feel that the SDT has provided sufficient technical basis to support a 4 month battery inspection and verification interval and requests

Organization	Yes or No	Question 4 Comment
		that further justification and external reference be provided. 2 - PBM not permitted for batteries - Manitoba Hydro disagrees with the SDT's basis for not permitting the use of PBM for batteries. The reasons provided by the SDT for disallowing them are that batteries are perishable and involve chemical reactions. However, it is our understanding that many other industries rely on performance based maintenance programs when dealing with similar equipment. We would appreciate an external reference or source which supports the claim that equipment with these characteristics cannot have a performance based maintenance system applied to them. 3 - Phased Implementation Plan - Manitoba Hydro maintains its position that prescribing how an entity must reach full compliance with PRC-005-2 will provide a negligible improvement in reliability while significantly increasing the compliance burden. PRC-005-2 affects a large number of assets and proving compliance for the prescribed percentages of assets during the transition period creates unnecessary overhead with no added value. We suggest that the requirement to demonstrate the percentage of assets currently under PRC-005-1 vs. PRC-005-2 be removed, that entities should be given a single compliance date for each of the maintenance intervals and be allowed the flexibility to schedule and complete their maintenance as required while transitioning to the defined time intervals in PRC-005-2, and that NERC measures progress on reaching PRC-005-2 intervals using means other than Compliance measures such as industry surveys. 4 - Data Retention Requirements - The data retention requirements are too uncertain for two reasons. First, the requirement to "provide other evidence" if the evidence retention period specified is shorter than the time since the last audit introduces uncertainty because a responsible entity has no means of knowing if or when an audit may occur of the relevant standard. Secondly, it is unclear what 'other evidence', besides the specified evidence in the Measures, an entity may be asked to provide to demonstrate it was compliant for the full time period since their last audit.

Organization	Yes or No	Question 4 Comment
Response: The SDT thanks you for your comments. 1. The SDT believes that sufficient industry expertise supports a four-month interval. 2. The SDT believes that batteries cannot be a unique population segment of a Performance-based Maintenance (PBM) Program because there are too many variables in the electrochemical process to completely isolate all of the performance-changing criteria necessary for using PBM on battery systems. 3. The SDT disagrees with your proposal for a phased implementation plan. 4. The SDT has been advised to include this paragraph as the first paragraph in the evidence retention section.		
Alber Corporation		My comment is in regard to the proposed maintenance tasks associated with ohmic testing and capacity testing of lead-acid batteries affected by PRC-005-2.The option is given to the battery use to perform either inter cell/unit ohmic tests OR battery capacity tests whichever suits the user. The two tests, while related, are not directly interchangeable with one another. Ohmic tests are intended to be used as a tool during battery maintenance inspections to determine the general state of health (condition) of the battery as a whole. Capacity tests are intended to demonstrate the actual capacity of a battery. Ohmic tests cannot be substituted for capacity tests. Alber has pioneered the development of portable and fixed internal resistance test equipment for stationary lead-acid batteries since 1972. Through years of research, testing in real-world applications and development, Alber has conclusively determined that there is a direct relationship between internal cell resistance and capacity. However, because this correlation is not linear, ohmic measurements should not be used to calculate capacity or remaining life. Ohmic measurements should be used as a supplement to capacity testing and not as a replacement. These measurements are very valuable in identifying developing problems between the capacity testing intervals and for determining whether a battery string is going to perform its intended mission. IEEE 1188-2005 for VRLA batteries agrees with this and recommends measurement of this parameter once every three months. While not specifically recommended in IEEE 450-2010 for vented lead-acid batteries, ohmic measurements can provide early warning of potential failure and should be performed at least

Organization	Yes or No	Question 4 Comment
		annually. Again, if readings result in doubt that a battery will perform as intended, follow up capacity testing is recommended. A battery discharge test completely simulates the operating environment and therefore conclusively proves that a battery can perform during an emergency. The results of these tests will help set the priority for capacity testing as the user becomes more familiar with their batteries and may assist in extending capacity test intervals. The intention of the proposed NECR PRC-005-2 standard as it relates to the DC supply, and, in particular, the station battery is to increase reliability of the bulk electric system (BES) in north America. In its current draft form, PRC-005-2 proposes the utility may perform internal ohmic measurements or perform capacity, but both tests are not required. It would appear therefore; that the Standards Drafting Team (SDT) has made the assumption that test results obtained from measuring cell internal ohmic values is the same as performing a capacity test. It is not, and to provide the option to perform one test or the other runs counter to industry recommended practices. Such maintenance practices will, in effect, ultimately reduce the reliability of the BES rather than improve it. Periodic capacity testing on a 5 year interval for VLA batteries, and a 2 year interval for VRLA batteries is consistent with IEEE 450-2010 and IEEE 1188-2005 recommended practices respectively. It should be part of a complete maintenance program designed to maximize the DC supply's availability when needed. Respectfully submitted, Richard Tressler Alber Corp.
Response: Thank you for your comment. The SDT agrees with your statement, and those of others, concerning the true capacity of the station battery and relating it to internal ohmic measurements. Tables 1-4a, 1-4b and 1-4c have been modified for clarity, and the Supplemental Reference and FAQ Document has been modified to further elaborate on these concerns.		
NIPSCO		Per NIPSCO Tech Service Dept : There is a need for NERC to provide a format for maintenance reports. Also, it would help if specific test requirements for relays were provided.
Response: Thank you for your comments. The SDT do not believe it is necessary or appropriate to prescribe a specific format for test results or test requirements.		
PNM Resources		PNM Resources appreciate the outstanding work of the SDT! We offer two comments

Organization	Yes or No	Question 4 Comment
		for consideration by the SDT. 1) We believe that the 6 Calendar Month battery cell/unit internal ohmic value measurement for VRLA Batteries may be more frequent than we believe is necessary to maintain reliability. PNM has witnessed no significant failure patterns with VRLA batteries in our system and we currently do impedance testing of all Transmission Station Batteries on a 2-year basis. 2) We also believe that system constraints could arise that will make it difficult to "verify all paths of the trip circuits inclusive of all auxiliary relays through the trip coil(s) of the circuit breakers or other interrupting devices" as specified in Table 1-5 for "unmonitored control circuitry associated with protective functions inclusive of all auxiliary relays". Thank you for your consideration.
Response: Thank you for your comments. 1. The SDT believes that it is necessary to verify that the station battery can perform as manufactured by evaluating the cell/unit parameters to station battery baseline if a performance or modified performance test is not conducted. Please see Section 15.4 of the Supplementary Reference and FAQ Document for a discussion of this topic. 2. The SDT believes the intervals and activities specified are technically effective, in a fashion that may be consistently monitored for compliance. It is left to the entity to determine how to align these requirements with requirements of other regulations and with operational concerns.		
American Electric Power		PRC-005-2 is intended to supersede the existing standard PRC-017-0 "Special Protection System Maintenance and Testing". As it is currently written, an Entity with a Special Protection System will be required by R1 to select either a time-based, performance-based or combination maintenance method for the Entity's SPS. Since Special Protection Systems are not frequently installed, it is unlikely that an Entity will be able to meet the requirement of R2 and Attachment A that the Segment population contain 60 components for all components of the SPS. This will require the Entity to utilize the time-based maintenance method for at least some

Organization	Yes or No	Question 4 Comment
		components in the SPS. Under the time-based maintenance method and R3, the Entity will be required to utilize the minimum maintenance activities and maximum maintenance intervals prescribed within Tables 1-1 through 1-5, Table 2, and Table 3. Special Protection Systems by their nature may physically include components that are not listed in the NERC definition of Protection System and therefore are not included in the tables of PRC-005-2. The standard, as currently drafted, does not clearly provide a means for an Entity with a Special Protection System to establish minimum maintenance activities and maximum maintenance intervals for components that have been declared by their Region as part of a Special Protection System but that are not included in the NERC definition of Protection System.
Response: The SDT thanks you for your comments. The SDT does not perceive the gap in maintenance requirements that you describe for SPSs.		
US Bureau of Reclamation		1. Re Terms defined for use only within PRC-005-2: The standard provides definitions which will not be incorporated into the Glossary of Terms. This would allow the definitions as used in this standard to conflict with the definition used in other standards if this practice becomes more widespread and would reduce the cohesiveness of the standard set. 2. Re The definition of Components: The standard defined what constitutes a control circuit as a component type with "Control circuitry associated with protective functions through the trip coil(s) of the circuit breakers or other interrupting devices." The standard then modified the definition by allowing "a control circuit Component is dependent upon how an entity performs and tracks the testing of the control circuitry." The definition should not be dependent upon practice. This makes the definition a fill in the blank definition. Either eliminate the allowance or remove the definition of control circuit.
Response: The SDT thanks you for your comments.		

Organization	Yes or No	Question 4 Comment
1. The standard specifies that the terms used are intended for this standard only; therefore, there should no conflict with their use in any other PRC standard. 2. The intent of the different means of identifying control circuitry was to accommodate various entities' philosophies on testing these circuits. Regardless of how an entity chooses to identify their control circuitry, the entity must meet the requirements of the standard regarding maintenance of control circuitry.		
ReliabilityFirst		1. ReliabilityFirst votes in the negative for this standard primarily due to the language in Requirement R5. The language in Requirement R5 is subjective and non-measurable in its present state. ReliabilityFirst offers the following comments for consideration. 2. Definition of "Component" a. The language stating "discrete piece of equipment" within the first sentence is unclear and open ended. ReliabilityFirst suggests the following modified language for the first sentence in the definition of "Component": "A Component is a piece of equipment that is one of the five specific element included in a Protection System, including but not limited to a protective relay or current sensing device." 3. Definition of "Unresolved Maintenance Issue" a. There may be instances when a deficiency is identified and corrected during the maintenance itself. For further clarity and to address this circumstance, ReliabilityFirst recommends the following modification for consideration: "A deficiency identified during a maintenance activity that could not be corrected and causes the component to not meet the intended performance and requires follow-up corrective action." 4. Facilities Section 4.2.1 a. This is too limited or selective in only including Protection Systems that are installed on BES Elements to strictly detect Faults. There are a number of relays

Organization	Yes or No	Question 4 Comment
		that are installed to detect non-Fault but abnormal conditions such as power swings/out of step and overvoltage that should not be excluded from a maintenance program. ReliabilityFirst recommends the following language for consideration: "Protection Systems that are installed for the purpose of protecting BES Elements (lines, buses, transformers, etc.)" 5. Facilitates Section 4.2.2 a. It is unclear what requirements the phrase "installed per ERO underfrequency load-shedding requirements." is referring to. Is it NERC UFLS Requirements, Regional UFLS Requirements, etc.? To be consistent with section 4.2.3, ReliabilityFirst recommends the following for consideration: "Protection Systems used for underfrequency load-shedding systems installed to arrest declining frequency, for BES reliability. 6. Requirement R3 a. For time-based maintenance program(s), there is no safeguard if more than 4% Countable Events are experienced during a maintenance interval. ReliabilityFirst recommends adding an new Subpart 3.1 (similar to the language for performance-based in Attachment A): "3.1 If the Components in a Protection System Segment maintained through a time-based PSMP experience 4% or more Countable Events, develop, document, and implement a Corrective Action Plan to reduce the Countable Events to less than 4% of the Segment population within 3 years." 7. Requirement R5 a. Requirement R5 has language which states "...shall demonstrate efforts to correct...". ReliabilityFirst believes this language is subjective and non-measurable. It will be difficult in determining what amount of demonstration an entity will need to provide in order to be compliant. There is also no timeframe in which the correction needs to be completed (is it 30 days or 30 years?). ReliabilityFirst believes measurable language such as "shall correct" or "shall

Organization	Yes or No	Question 4 Comment
		have and implement a Corrective Action Plan" should be incorporated within the requirement. 8. Table 1-2 a. For "Any communications system with continuous monitoring or periodic automated testing for the presence of the channel function, and alarming for loss of function" ReliabilityFirst believes the maintenance interval is too short. Carrier communication failures are a major cause of Misoperations. Many have automatic checkback and are monitored but continue to fail during Fault conditions. ReliabilityFirst recommends a maintenance interval of 6 years. b. For "Any communications system with continuous monitoring or periodic automated testing for the performance of the channel using criteria pertinent to the communications technology applied" ReliabilityFirst believes a maintenance interval should be required. ReliabilityFirst recommends a maintenance interval of 12 years. 9. Table 1-3 a. For "Any voltage and current sensing devices not having monitoring attributes of the category below." ReliabilityFirst recommends a maintenance interval of 6 years. b. For "Voltage and Current Sensing devices connected to microprocessor relays with AC measurements are continuously verified by comparison of sensing input value..." ReliabilityFirst believes the concept of never having to do any testing just because you have continuous monitoring is fundamentally flawed in this table as well as 1-5 and 2. Continuous monitoring and measurement comparison cannot test everything, such as loss of ground, multiple grounds and turn-to-turn failures, and monitoring itself can fail. ReliabilityFirst recommends a maintenance interval of 12 years. 10. Table 1-5 a. ReliabilityFirst recommends adding "auxiliary tripping devices" to

Organization	Yes or No	Question 4 Comment
		Electromechanical lockout devices in row 2 of Table 1-5. If lockout relays are maintained every six years auxiliary tripping devices should be as well. ReliabilityFirst recommends the following language for considerations: "Electromechanical lockout devices and auxiliary tripping devices which are directly in a trip path from the protective relay to the interrupting device trip coil (regardless of any monitoring of the control circuitry)."

Response: The SDT thanks you for your comments.

1. Requirement R5 is expressly focused on allowing entities to resolve deficiencies in an effective manner, rather than performing "band-aid" fixes. Management of completion of the identified unresolved maintenance issue is a complex topic that falls outside the scope of this standard. There can be any number of supply, process and management problems that make setting repair deadlines impossible. The SDT specifically chose the phrase "demonstrate efforts to correct" (with guidance from NERC Staff) because of the recognition that more complex unresolved maintenance issues could require more time to resolve effectively than there is time remaining in the maintenance interval, yet the problems must eventually be resolved. The SDT believes that corrective actions should be timely, but concludes it would be impossible to postulate all possible remediation projects; and, therefore, impossible to specify bounding time frames for resolution of all possible unresolved maintenance issues or what documentation might be sufficient to provide proof that effective corrective action is being undertaken. The definition of "Unresolved Maintenance Issue" has been modified to add a clarifying phrase that the deficiency "cannot be corrected during the maintenance interval."
2. The SDT believes it important to distinguish between component "types" (of which there are 5) and individual components (of which there are numerous examples), and believes that you are confusing the two concepts.
3. The definition of "Unresolved Maintenance Issue" has been modified to add a clarifying phrase that the deficiency "cannot be corrected during the maintenance interval."
4. The SDT believes your proposed language for Applicability Section 4.2.1 is overly broad and could lead to unintentional application of PRC-005-2 to other as-of-yet unidentified systems.
5. The SDT intends that this refers to either NERC UFLS requirements or regional UFLS requirements.
6. Countable Events apply only to entities that utilize a performance-based PSMP (Requirements R2 and R4). For entities that use a time-based program, the establishment of maximum intervals within the standard relieves the entity from having to have any

Organization	Yes or No	Question 4 Comment
		basis, etc., that the intervals used are appropriate, as long as those intervals conform to the tables. 7. Management of completion of the identified Unresolved Maintenance Issue is a complex topic that falls outside of the scope of this standard. There can be any number of supply, process and management problems that make setting repair deadlines impossible. The SDT specifically chose the phrase "demonstrate efforts to correct" (with guidance from NERC Staff) because of the concern that many more complex unresolved maintenance issues might require greater than the remaining maintenance interval to resolve (and yet still be a "closed-end process"). For example, a problem might be identified on a VRLA battery during a six-month check. In instances such as one that requires battery replacement as part of the long-term resolution, it is highly unlikely that the battery could be replaced in time to meet the six-calendar-month requirement for this maintenance activity. The SDT does believe corrective actions should be timely, but concludes it would be impossible to postulate all possible remediation projects; and, therefore, impossible to specify bounding time frames for resolution of all possible Unresolved Maintenance Issues, or what documentation might be sufficient to provide proof that effective corrective action is being undertaken. The definition of "Unresolved Maintenance Issue" has been modified to add a clarifying phrase that the deficiency "cannot be corrected during the maintenance interval." 8. a) The SDT believes that sufficient emphasis is placed on communication system checks and maintenance. The SDT also believes that more frequent hands-on testing will be no more effective in finding problems than the automated monitoring of these functions. b). The SDT believes that continuous monitoring requirements, as already drafted, will drastically reduce risk to the BES. 9. a) The intervals and activities specified are believed by the SDT to be technically effective, in a fashion that may be consistently monitored for compliance. Entities are empowered to develop PSMPs that exceed these requirements, if they determine such a PSMP to be necessary. b). The SDT believes that continuous monitoring is equivalent to actually conducting the maintenance activities otherwise specified at a far more frequent interval than would be possible with physical hands-on maintenance; and, therefore, improves reliability. The SDT has also identified throughout the tables specific activities that they believe to not be effectively conducted via monitoring. 10. The SDT believes the intervals and activities specified for auxiliary relays are technically effective, and believes sufficient emphasis is placed on auxiliary tripping relay maintenance.
ATCO Electric Ltd		1. Table 1-4(a) Vented Lead-Acid (VLA) Batteries: ATCO Electric has a number of

Organization	Yes or No	Question 4 Comment
		remote substations that are difficult to access frequently. The requirement for a 4 calendar month inspection for electrolyte level is too frequent. (i) Does alarm/monitor technology exist for electrolyte level in battery design today? For in-service battery systems, if battery alarm/monitor technology exists, a capital project is required to retrofit each battery system and this kind of retrofit work could be detrimental to both the battery design life as well as the battery reliability. (ii) The electrolyte level requirement would become achievable if electrolyte level inspection was moved to the 18 calendar months category, or if the 4 calendar months frequency was increased to 8 calendar months. 2. Table 1-4(b) Valve Regulated Lead Acid (VRLA) Batteries: ATCO Electric has a number of remote substations that are difficult to access frequently. The requirement of a 6 calendar month inspection of individual battery cell/unit internal ohmic values is too frequent. The requirement would become achievable if battery cell/unit internal ohmic value inspections were moved to the 18 calendar months category. 3. Table 1-5 Control Circuitry When a breaker is opened, there is no indication on which trip coil is actually operated. How do market participants demonstrate compliance for "verify that each trip coil is able to operate..."? The verification of trip coil health is done during breaker maintenance with various maintenance durations that maybe longer than 6 years depending on breaker types. 4. The requirement of "verify electrical operation of electromechanical lockout

Organization	Yes or No	Question 4 Comment
		devices" introduces high risk of human error outages to the BES system and diminishes the reliability gain from performing this activity. The drafting team should consider lockout relay failure rates, onerous tasks of blocking each trip contacts in many BES elements' tripping circuits, imposed risk, required resources in the overall reliability benefit gained by performing the lockout relay maintenance.
Response: The SDT thanks you for your comments. 1. Devices to monitor electrolyte levels are available. The SDT believes that the four-month interval for checking electrolyte level (absent monitoring) is appropriate, as low electrolyte level may impair the ability of the battery to function properly. 2. The SDT believes that the six-month interval for evaluation of cell/unit ohmic parameters to baseline is appropriate, as degradation of these parameters may impair the ability of the battery to function properly. 3. Breaker control circuitry is typically designed with facilities, such that individual trip coils can be isolated for observation. Also, it may be possible to distinguish operation of individual trip coils by determining what devices initiate those trip coils. 4. The SDT believes that electromechanical lockout relays need periodic operation. As such, these devices are required to be exercised at the same six- year interval required for electromechanical relays. The SDT recognizes the risk of human error trips when working with testing of lockout devices, but believes these risks can be managed. Performance-based maintenance is an option if you want to extend your intervals beyond six years.		
Florida Municipal Power Agency		The applicability of the standard should be modified to reflect the FERC approved interpretation PRC-005-1b Appendix 1 that basically says that applicable Protection Systems are those that protect a BES Element AND trip a BES Element. The interpretation states: The applicability as currently stated will sweep in distribution protection: “4.2.1 Protection Systems that are installed for the purpose of detecting Faults on BES Elements (lines, buses, transformers, etc.)”Many (most) network distribution systems that have more than one source into a distribution network will have reverse power relays to detect faults on the BES and trip the step-down transformer to prevent feedback from the distribution to the fault on the BES. This is not a BES reliability issue, but more of a safety issue and distribution voltage issue.

Organization	Yes or No	Question 4 Comment
		These relays would be subject to the standard as the applicability is currently written, but, should not be and they are currently not within the scope of PRC-005-1b Appendix 1 because the step-down transformer (non-BES) is tripped and not a BES Element (hence, the "and" condition of the interpretation is not met). There are many other related examples of distribution that might be networked or have distributed generation on a distribution circuit where such reverse power relays, or overcurrent relays with low pick-ups, are used for safety and distribution voltage control reasons and are not there for BES Reliability. To make matters worse, for these Reverse Power relays, it is pretty much impossible to meet PRC-023 because the intent of the relay is to make current flow unidirectional (e.g., only towards the distribution system) without regard for the rating of the elements feeding the distribution network. So, if these relays are swept in, and if they are on elements > 200 kV, then the entity would not be able to meet PRC-023 as that standard is currently written. So, the SDT should adopt the FERC approved interpretation.
Response: Thank you for your comments. The SDT believes that the Applicability, as stated in PRC-005-2, is correct and supports the reliability of the BES. The SDT observes that the approved Interpretation addresses the term, “transmission Protection System,” and notes that this term is not used within PRC-005-2; thus, the interpretation does not apply to PRC-005-2. PRC-005-2 specifically addresses “Protection Systems that are installed for the purpose of detecting Faults on BES Elements.” Please see Section 2.3 of the Supplementary Reference and FAQ Document for additional discussion. Reverse power relays and low-set overcurrent relays, as discussed in your comment, are not installed for detecting Faults on BES elements. The SDT does not understand your concerns regarding PRC-023, but we suggest you provide those concerns to the team working on that standard.		
Ingleside Cogeneration LP		The derivation of the implementation plan apparently incorporates the “requirements” of NERC’s Compliance organization, which has released several CANs on the topic. This is exactly backwards, and has led to at least one CAN which has been withdrawn due to legal overreach. However, the plan as written is very complex. We believe that diagrams of acceptable time frames should be included in the implementation plan so that industry stakeholders can better assess the impact

Organization	Yes or No	Question 4 Comment
		on their maintenance operations.
Response: The SDT thanks you for your comments. The SDT has developed the Implementation Plan such that it is clear, both to entities and to Compliance Enforcement Authorities, as to when the various requirements must be fully implemented. The Implementation Plan has been crafted to allow entities to systematically implement the standard in a manner that facilitates effective ongoing performance of a PSMP. The SDT does not believe it necessary to "diagram" the PSMP.		
EPRI		The drafting time should see the opinion of the IEEE Stationary Battery Committee before this standard is rolled out for implementation.
Response: The SDT thanks you for your comments. Several members of the NERC Task Force of the IEEE Stationary Battery Committee participated in developing modifications to the sections of Table 1-4 to be more effective and technically accurate.		
ACES Power Marketing Standards Collaborators		1. The first part of definition of a Countable Event should be modified as follows: "The failure of a Component such that it requires repair or replacement...". As it is currently worded, it is technically counting the Component as the Countable Event and not the failure of the component. Considering that the other two items that are Countable Events are conditions and misoperations, it seems appropriate to make failure the Countable Event. 2. Application of this standard to UFLS is problematic as worded in Section 4.2.2. The UFLS are only applicable if "installed per ERO underfrequency load-shedding requirements". Technically, no UFLS fits this description because there are no ERO requirements to have a UFLS. PRC-006-0 was never approved by the Commission and is not enforceable. The Commission considered it a "fill-in-the-blank" standard. While PRC-006-1 corrects the "fill-in-the-blank" issues and was approved by the NERC BOT November 4, 2010, the Commission has yet to act on it. 3. The data retention requirement for the Protection System Maintenance Program documentation seems excessive. The Data Retention section states that all versions since the last compliance audit must be maintained. Since TOs, GOs,

Organization	Yes or No	Question 4 Comment
		and DPs are all on six year audit cycles, this would require maintaining this documentation for six years. Is this really necessary? The length could become even greater once NERC implements registered entity assessments that could shorten or lengthen the periods between compliance audits. The data retention requirements for Requirements R2, R3, R4, and R5 are not consistent with NERC Rules of Procedure. Section 3.1.4.2 of Appendix 4C - Compliance Monitoring and Enforcement Program states that the compliance audit will cover the period from the day after the last compliance audit to the end date of the current compliance audit. The data retention requirements compel the registered entity to retain documentation for the longer of "the two most recent performances of each distinct maintenance activity for Protection System Components, or all performances of each distinct maintenance activity for the Protection System Component since the previous scheduled audit date". While it may have been intended to apply to both clauses, the "since the previous scheduled audit date" only applies to the second clause. Since some of the maintenance activities have intervals of 12 years, this would require the registered entity to retain documentation for 24 years which cannot be audited since it is outside the audit window per the Rules of Procedures. At a minimum, we suggest clarifying that the documentation must not be maintained past the day after the last audit completion date. In the fourth paragraph of the Data Retention section, Component is not used consistently. It is used in both singular and plural form. It seems like it should be one or the other. 4. Requirement R1 VSLs: For the High VSL, "entities'" should be "entity's" to be consistent with the other VSLs. 5. It is not clear why missing three component types jumps to a Severe VSL. Missing two is a Moderate VSL. Missing three should be a High VSL.

Organization	Yes or No	Question 4 Comment
Response: Thank you for your comments. 1. The SDT agrees with your comments on Countable Event, and has modified the definition of Countable Event to: "A failure of a Component requiring …" 2. Applicability Clause 4.2.2 applies to whatever ERO-required UFLS that may exist, either today or in the future. NERC Reliability Standard PRC-006-1 has now been approved by FERC. 3. The SDT believes that all versions of the entity's PSMP should be retained for audit purposes. For a Compliance Monitor to be assured of compliance, the SDT believes the Compliance Monitor will need the data of the most recent performance of the maintenance, as well as the data of the preceding maintenance to validate that entities have been in compliance since the last audit (or currently, since the beginning of mandatory compliance). The SDT specified the data retention in the posted standard to establish this level of documentation, which is consistent with the current practices of several regional entities. 4. The SDT corrected the Requirement R1- High VSL, as you suggested. 5. The SDT believes that missing three components is a "significant percentage," and is in accordance with the VSL Guidelines.		
Independent Electricity System Operator		The IESO continues to disagree with the VRF assigned to the new R3 and R4. R3 and R4 ask for implementing the maintenance plan (and initiate corrective measures) whose development and content requirements (R1 and R2) themselves have a Medium VRF. Failure to develop a maintenance program with the attributes specified in R1, and stipulation of the maintenance intervals or performance criteria as required in R2, will render R3/R4 not executable. Hence, we reiterate our position that the VRF for R3 be changed to Medium.
Response: Thank you for your comments. The SDT disagrees, and believes the failure to implement a PSMP should be assigned a VRF of High.		
BAE Batteries USA		The NERC Standard should incorporate suggestions made in a letter provided to the NERC Drafting Team along w/ a specific Task Force Report commissioned by the IEEE Stationary Battery Committee.
Response: The SDT thanks you for your comments. Several members of the NERC Task Force of the IEEE Stationary Battery		

Organization	Yes or No	Question 4 Comment
Committee participated in developing modifications to the sections of Table 1-4 to be more effective and technically accurate.		
Nebraska Public Power District		The SDT believes that it is possible to manage the risks that you describe and that performance of these trip path verifications will be an overall benefit to the reliability of the BES 1. Please provide the basis for the requirement of functional trip checks? 2. Are there recorded instances that an "event" would have been avoided if functional trip checks had been performed? 3. Suggest for monitored microprocessor relays in Table 1-1 and 3 to verify "settings are as specified that are essential to the proper functioning of the protection system". Many settings are not essential. 4. A key concern is will the reliability of the bulk electric system be affected negatively due to increased risk from human element initiated events as a result of the more frequent functional trip checks that will be required. All functional tests should be moved to the minimum frequency of 12 years to minimize this unknown but present risk.
Response: The SDT thanks you for your comments. 1. Please see Section 15.3 of the Supplementary Reference and FAQ document. 2. While the SDT cannot comment on any specific events that would have been avoided explicitly by performing functional trip checks, there is no doubt that the number of Misoperations will be reduced if more comprehensive maintenance is performed. It is also likely that mal-performance of control circuitry has been a factor in a number of disturbances. 3. In many microprocessor relays, various settings impact other settings, making it difficult to explicitly determine which are essential to proper functioning of the Protection System. Additionally, the SDT anticipates that this activity, for microprocessor relays, may very well be easily performed by downloading the settings from the relay and comparing them to the file of desired settings. 4. The maintenance of the overall control circuitry is already specified for a 12-year interval. Only trip coil verification and lockout		

Organization	Yes or No	Question 4 Comment
relay verification are specified for six years.		
Southwest Power Pool Standards Development Team		Under section 1.3 Evidence Retention we feel like documentation of the last two performances of each distinct maintenance activity should be limited to the last one. This is due to the amount of documentation being recorded as well as for certain a component there is a 12 year maximum interval. Would you have to store this information for 24 years? This could also violate the NERC ruling that was just made on a CAN 008 that stated you do not have to show intervals earlier than June 18th 2007. Suggested alternate language "For Requirement R2, Requirement R3, Requirement R4, and Requirement R5, the Transmission Owner, Generator Owner, and Distribution Provider shall each keep documentation of the most recent performance of each distinct maintenance activity for the Protection System Components, or all performances of each distinct maintenance activity for the Protection System Component since the previous audit date, whichever is longer, but not prior to June 18th 2007."
Response: The SDT thanks you for your comments. For a Compliance Monitor to be assured of compliance, the SDT believes the Compliance Monitor will need the data of the most recent performance of the maintenance, as well as the data of the preceding maintenance to validate that entities have been in compliance since the last audit (or currently, since the beginning of mandatory compliance). The SDT specified the data retention in the posted standard to establish this level of documentation, which is consistent with the current practices of several regional entities.		
NextEra Energy, Inc.		1. Verifying electrolyte levels of vented lead acid (VLA) batteries every four (4) calendar months is excessive and will not promote the reliability of the bulk electric system (BES). The maximum maintenance interval should be twelve (12) calendar months. Today's lead-calcium and lead-selenium-low antimony batteries do not experience rapid water loss as compared to the legacy lead-antimony batteries and if battery cells should crack from positive plate growth, twelve (12) calendar months is more than adequate to detect electrolyte leakage before cell failure.

Organization	Yes or No	Question 4 Comment
		2. Verifying that unmonitored communication systems are functional every four (4) calendar months is excessive and will not promote the reliability of the BES. The maximum maintenance interval should be twelve (12) calendar months. Based on our operating experience, twelve (12) calendar months is sufficient to detect communication failures without affecting the reliability of the BES.
Response: The SDT thanks you for your comments. 1. The SDT believes that the four-month interval for checking electrolyte level (absent monitoring) is appropriate, as low electrolyte level may impair the ability of the battery to function properly. 2. The SDT believes that the four-month interval is proper for unmonitored communications systems. The activity related to this interval is to verify basic operating status.		
Flathead Electric Cooperative, Inc.		1. We appreciate the work of the drafting team to fulfill the SAR objectives. Flathead generally does not like some of the new definitions proposed by the revised standard, especially R5, “Unresolved Maintenance Issues” is too vague and will be left up to individual auditors to determine compliance. 2. In addition, it appears the drafting team is creating new definitions for plain English in the definition of Protection System Maintenance Program (PSMP). Surely "test, monitor, inspect, calibrate" don't need NERC definitions. Let's leave the definition as "An ongoing program by which Protection System components are kept in working order and proper operation of malfunctioning components is restored." Suggest deleting "A maintenance program for a specific component includes one or more of the following activities: o Verify- Determine that the component is functioning correctly. o Monitor - Observe the routine in-service operation of the component. o Test - Apply signals to a component to observe functional performance or output behavior, or to diagnose problems. o Inspect - Detect visible signs of component failure, reduced performance and degradation.

Organization	Yes or No	Question 4 Comment
		o Calibrate-Adjust the operating threshold or measurement accuracy of a measuring element to meet the intended performance requirement." 3. In addition, it appears the component and component type definitions alter the meaning of the NERC approved definition of a protection system. I would suggest the drafting team not try to redefine the NERC-approved definition of Protection system. 4. "Countable Event" definition seems to conflict with standards related to Misoperation of protection system.

Response: The SDT thanks you for your comments.

1. Management of completion of the identified unresolved maintenance issue is a complex topic that falls outside of the scope of this standard. There can be any number of supply, process and management problems that make setting repair deadlines impossible. The SDT specifically chose the phrase “demonstrate efforts to correct” (with guidance from NERC Staff) because of the concern that many more complex unresolved maintenance issues might require greater than the remaining maintenance interval to resolve (and yet still be a “closed-end process”). For example, a problem might be identified on a VRLA battery during a six-month check. In instances, such as one that requires battery replacement as part of the long term resolution, it is highly unlikely that the battery could be replaced in time to meet the six-calendar-month requirement for this maintenance activity. The SDT does believe corrective actions should be timely, but concludes it would be impossible to postulate all possible remediation projects and therefore, impossible to specify bounding time frames for resolution of all possible unresolved maintenance issues or what documentation might be sufficient to provide proof that effective corrective action is being undertaken. The definition of “Unresolved Maintenance Issue” has been modified to add a clarifying phrase that the deficiency “cannot be corrected during the maintenance interval.” The SDT believes the definition is sufficiently clear, while also allowing some flexibility for both TOs and auditors.
2. The SDT believes that the descriptions within the PSMP definition are necessary so that the definition will be clearly understood and so that entities consistently apply those terms as they implement the activities within the tables.
3. The definitions, for use within this standard, do not alter the approved definition of “Protection System,” but instead provide consistent terms for use within the standard.

Organization	Yes or No	Question 4 Comment
4. The definition, within this standard, of Countable Event has no relationship to the approved definition of Misoperation. It is used solely to describe and evaluate Protection System performance for the purpose of developing and perpetuating a performance-based PSMP.		
Entergy Services		1. We recommend the word "Protection" be deleted from the definition of Component to make the defined term Component be a generic term. If that word is not deleted then we recommend the term used in the standard "Protection System Component" be changed to "Component" since as defined a Component is a Protection System piece of equipment. Component - A Component is any individual discrete piece of equipment included in a System, including but not limited to a protective relay or current sensing device. 2. The designation of what constitutes a control circuit Component is dependent upon how an entity performs and tracks the testing of the control circuitry. Some entities test their control circuits on a breaker basis whereas others test their circuitry on a local zone of protection basis. Thus, entities are allowed
Response: The SDT thanks you for your comments. 1. The SDT intends that the term not be generic, and that term explicitly apply within this standard. 2. The intent of the different means of identifying control circuitry was to accommodate various entities' philosophies on testing these circuits. Regardless of how an entity chooses to identify their control circuitry, the entity must meet the requirements of the standard regarding maintenance of control circuitry.		
PNGC Comment Group		We thank the SDT for their hard work and will be voting "yes" on this project. However, we have 5 specific comments independent of the questions above and we've listed them in order of priority: 1. The PNGC Comment Group takes issue with the associated VSLs for R3. For a small entity using a time based maintenance program, even one missed interval could be enough to elevate them to a high VSL despite the limited impact on the Bulk Electric

Organization	Yes or No	Question 4 Comment
		System. Consider an entity with 9 total components within a specific Protection System Component Type. One violation would mean an 11% violation rate, enough to catapult them into a High VSL. Given the "NERC Guidance (Below), this seems to be a contradiction given the language of "...more than one". a. NERC Guidance on VSL assignment: i. LOWER: Missing a minor element (or a small percentage) of the required performance ii. Moderate: Missing at least one significant element (or a moderate percentage) of the required performance. iii. High: Missing more than one significant element (or is missing a high percentage) of the required performance or is missing a single vital component. iv. Severe: Missing most or all of the significant elements (or a significant percentage) of the required performance. We suggest changing the language for "Lower VSL" for R3 to: For Responsible Entities with more than a total of 20 Components within a specific Protection System Component Type in Requirement R3, 5% or fewer have not been maintained... OrFor Responsible Entities with a total of 20 or fewer Components within a specific Protection System Component Type, 2 or fewer Components in Requirement R3 have not been maintained... 2. The PNGC comment group disagrees with the "Evidence Retention" requirements for the standard. In the current version for R2-R5, entities are required to: "...keep documentation of the two most recent performances of each distinct maintenance activity for the Protection System Components, or all performances of each distinct maintenance activity for the Protection System Component since the previous scheduled audit date, whichever is longer." The PNGC comment group believes that keeping documentation for one previous maintenance activity or since the last audit, whichever is longer, should be sufficient. Keeping the two most recent instances of an activity with a maximum maintenance interval of 12 years could mean planning for up to 35 years or so of evidence retention. With the longer of "since the last audit" or "at least one maintenance interval" as the minimum retention requirement the CEA should have sufficient basis to determine compliance. 3. The PNGC comment group believes R5, "Unresolved Maintenance Issues" is too

Organization	Yes or No	Question 4 Comment
		vague and will be left up to individual auditors to determine compliance. This requirement appears ripe for misapplication and future CANs on the topic. Good utility practice will ensure that maintenance issues are corrected as a primary function of our members is to provide the most reliable service possible. The SDT lists several possible examples of evidence in M5 but we believe that more specificity is needed for evidence requirements or the requirement should be removed. We understand the importance of "maintenance" of protection systems and that when maintenance issues cannot be immediately addressed there needs to be follow up. We believe notation of the maintenance issue during the inspection should be sufficient for compliance. By including the examples in the associated measure for the requirement, we believe the SDT has confused the issue. In our opinion M5 should indicate that evidence of notation of the issue is all that is required (meaning acknowledging of the issue on the inspection form). Further, in your response to entity comments during the last comment period on this topic, you stated, "The SDT believes that an effective PSMP must include correction of deficiencies...". This statement implies that the standard must cover the correction of deficiencies to completion. There could be very long time frames associated with maintenance including management budget decisions, equipment purchase lead times and personnel scheduling for follow up work. Some issues could potentially require years of tracking within this standard creating an unnecessary compliance risk for the entity. We believe the SDT has met the intent of order 693 if a maintenance activity is initiated. The completion of the initiated maintenance activity should be outside the bounds of the standard and the standard should clearly state this. 4. We also find issues with the "Definitions of Terms Used in Standard "Specifically, the definition of "Component" seems to confuse the subject unnecessarily. We suggest simplifying the definition by breaking out the control circuitry and voltage and current sensing device examples. That is a lot of material to cover in what should be a simple definition of "Component". 5. Also we believe the definitions of the 5 behaviors under the PSMP definition are

Organization	Yes or No	Question 4 Comment
		unnecessary. We believe that indicating that the PSMP involves some or all of the 5 activities without trying to define them is fine. For example, your definition of "Inspect" states: Detect visible signs of component failure, reduced performance and degradation. But what if you find no failure, reduced performance or degradation? Have you not inspected the component? Or what about "verify"? If you determine the component is not functioning correctly, have you not verified anything?

Response: The SDT thanks you for your comments.

1. A smaller entity will have less to maintain in accordance with the standard; and, thus, the percentages are still appropriate.
2. For a Compliance Monitor to be assured of compliance, the SDT believes the Compliance Monitor will need the data of the most recent performance of the maintenance, as well as the data of the preceding maintenance to validate that entities have been in compliance since the last audit (or currently, since the beginning of mandatory compliance). The SDT specified the data retention in the posted standard to establish this level of documentation, which is consistent with the current practices of several regional entities.
3. Management of completion of the identified unresolved maintenance issue is a complex topic that falls outside of the scope of this standard. There can be any number of supply, process and management problems that make setting repair deadlines impossible. The SDT specifically chose the phrase "demonstrate efforts to correct" (with guidance from NERC Staff) because of the concern that many more complex unresolved maintenance issues might require greater than the remaining maintenance interval to resolve (and yet still be a "closed-end process"). For example, a problem might be identified on a VRLA battery during a six-month check. In instances such as one that requires battery replacement as part of the long term resolution, it is highly unlikely that the battery could be replaced in time to meet the six-calendar-month requirement for this maintenance activity. The SDT does believe corrective actions should be timely, but concludes it would be impossible to postulate all possible remediation projects; and, therefore, impossible to specify bounding time frames for resolution of all possible unresolved maintenance issues or what documentation might be sufficient to provide proof that effective corrective action is being undertaken. The definition of "Unresolved Maintenance Issue" has been modified to add a clarifying phrase that the deficiency "cannot be corrected during the maintenance interval." The evidence listed in the Measure is intended to be illustrative of the types potentially effective evidence, but is not all-inclusive, as demonstrated by the term, "… not limited to…"
4. The definitions of terms that are specified for use only within this standard are intended to support consistent application of the

Organization	Yes or No	Question 4 Comment
standard. 5. The SDT believes that the descriptions within the PSMP definition are necessary so that the definition will be clearly understood and so that entities consistently apply those terms as they implement the activities within the tables. The term "inspect" was modified to "Examine for …" in consideration of your comment.		
Western Area Power Administration		Western Area Power Administration - Rocky Mountain Region does not agree with changing lockout devices to 6 year intervals for testing.
Response: The SDT thanks you for your comments. The interval for lockout relays has been at six years for several drafts; this is not a change. The SDT believes that electromechanical lockout relays need periodic operation, and that six years is the appropriate interval. Performance-based maintenance is an option, if you want to extend your intervals beyond six years.		

END OF REPORT

Consideration of Comments

Protection System Maintenance and Testing - Project 2007-17

The Protection System Maintenance and Testing Drafting team thanks all commenters who submitted comments on the 3rd draft of the standard for Protection System Maintenance. These standards were posted for a 30-day public comment period from June 18, 2012 through June 27, 2012. Stakeholders were asked to provide feedback on the standards and associated documents through a special electronic comment form. There were 51 sets of comments, including comments from approximately 170 different people from approximately 110 companies representing all 10 Industry Segments as shown in the table on the following pages.

All comments submitted may be reviewed in their original format on the standard's project page:

http://www.nerc.com/filez/standards/Protection_System_Maintenance_Project_2007-17.html

If you feel that your comment has been overlooked, please let us know immediately. Our goal is to give every comment serious consideration in this process! If you feel there has been an error or omission, you can contact the Vice President of Standards and Training, Herb Schrayshuen, at 404-446-2560 or at herb.schrayshuen@nerc.net. In addition, there is a NERC Reliability Standards Appeals Process.[1]

Summary Consideration of all Comments Received:

Definitions:

No changes were made to the Definitions.

Applicability:

No changes were made to the Applicability.

Requirements:

No changes were made to the Requirements.

Tables

In Table 1-2, the interval for the second portion of the first row of the table was changed from 12 years to 6 years. Also, in Table 1-2, "channels" was modified to "communications systems" in two locations,

[1] The appeals process is in the Standard Processes Manual: http://www.nerc.com/files/Appendix_3A_StandardsProcessesManual_20120131.pdf

and the Component Attributes in the last row were modified to clarify that all attributes must be present to use the associated intervals and activities.

Editorial changes were made to Tables 1-4c, 1-4d., and 1-4e. The words "Protection System" were added to the headers of Tables 1-4c and 1-4d; in Table 1-4e, a redundant "only" was removed.

No additional changes were made to the Tables.

Measures

No changes were made to the Measures.

VRFs and VSLs

No changes were made to the VRFs and VSLs.

Version History

The Version History was updated to reflect the latest approved version of PRC-005.

Implementation Plan

The Implementation Plan was revised to retire the four legacy standards upon full implementation of PRC-005-2 rather than upon the Effective Date. Clarifying language was added to address this change.

Supplementary Reference and FAQ Document

Numerous changes, both technical and editorial, were made throughout the Supplementary Reference and FAQ.

Mapping Document

Minor clarifying changes were made to the Mapping Document.

Index to Questions, Comments, and Responses

1. In response to stakeholder input, the SDT made several changes to the standard and associated definitions as detailed below: 11

2. The SDT made complementary changes in the "Supplementary Reference and FAQ Document" to provide supporting discussion for the Requirements within the standard. Do you have any specific suggestions for further improvements? 24

3. If you have any other comments that you have NOT provided in response to the above questions, please provide them here. (Please do not repeat comments that you provided elsewhere.)41

The Industry Segments are:

1 — Transmission Owners
2 — RTOs, ISOs
3 — Load-serving Entities
4 — Transmission-dependent Utilities
5 — Electric Generators
6 — Electricity Brokers, Aggregators, and Marketers
7 — Large Electricity End Users
8 — Small Electricity End Users
9 — Federal, State, Provincial Regulatory or other Government Entities
10 — Regional Reliability Organizations, Regional Entities

Group/Individual		Commenter	Organization	Registered Ballot Body Segment									
				1	2	3	4	5	6	7	8	9	10
1.	Group	Guy Zito	Northeast Power Coordinating Council										X

	Additional Member	Additional Organization	Region	Segment Selection
1.	Alan Adamson	New York State Reliability Council, LLC	NPCC	10
2.	Greg Campoli	New York Independent System Operator	NPCC	2
3.	Sylvain Clermont	Hydro-Quebec TransEnergie	NPCC	1
4.	Chris de Graffenried	Consolidated Edison Co. of New York, Inc.	NPCC	1
5.	Gerry Dunbar	Northeast Power Coordinating Council	NPCC	10
6.	Mike Garton	Dominion Resources Services, Inc.	NPCC	5
7.	Kathleen Goodman	ISO - New England	NPCC	2
8.	Michael Jones	National Grid	NPCC	1
9.	David Kiguel	Hydro One Networks Inc.	NPCC	1
10.	Michael R. Lombardi	Northeast Utilities	NPCC	1

Group/Individual	Commenter	Organization	Registered Ballot Body Segment									
			1	2	3	4	5	6	7	8	9	10

11.	Randy MacDonald	New Brunswick Power Transmission	NPCC	9
12.	Bruce Metruck	New York Power Authority	NPCC	6
13.	Silvia Parada Mitchell	NextEra Energy, LLC.	NPCC	5
14.	Lee Pedowicz	Northeast Power Coordinating Council	NPCC	10
15.	Robert Pellegrini	The United Illuminating Company	NPCC	1
16.	Si Truc Phan	Hydro-Quebec TransEnergie	NPCC	1
17.	David Ramkalawan	Ontario Power Generation, Inc.	NPCC	5
18.	Brian Robinson	Utility Services	NPCC	8
19.	Michael Schiavone	National Grid	NPCC	1
20.	Wayne Sipperly	New York Power Authority	NPCC	5
21.	Tina Teng	Independent Electricity System Operator	NPCC	2
22.	Doanld Weaver	New Brunswick System Operator	NPCC	2
23.	Ben Wu	Orange and Rockland Utilities	NPCC	1
24.	Peter Yost	Consolidated Edison Co. of New York, Inc.	NPCC	3

2.	Group	Chris Higgins	Bonneville Power Administration	X		X		X	X				

	Additional Member	Additional Organization	Region	Segment Selection
1.	Fred	Bryant	WECC	1
2.	Jason	Burt	WECC	1
3.	Brenda	Vasbinder	WECC	1
4.	Heather	Laslo	WECC	1

3.	Group	Nick Wehner	ACES Power Marketing Standards Collaborators	X		X	X	X					

	Additional Member	Additional Organization	Region	Segment Selection
1.	Ashley Gonyer	East Kentucky Power Cooperative	SERC	1, 3, 5
2.	John Shaver	Arizona Electric Power Cooperative	WECC	1, 4, 5
3.	John Shaver	Southwest Transmission Cooperative, Inc.	WECC	1, 4, 5
4.	Mark Ringhausen	Old Dominion Electric Cooperative	SERC	3, 4
5.	Mohan Sachdeva	Buckeye Power, Inc.	RFC	3, 4
6.	Scott Brame	North Carolina Electric Membership Corporation	RFC	1, 3, 4, 5

4.	Group	Jesus Sammy Alcaraz	Imperial Irrigation District (IID)	X		X	X	X	X				

	Additional Member	Additional Organization	Region	Segment Selection

Group/Individual	Commenter	Organization	Registered Ballot Body Segment									
			1	2	3	4	5	6	7	8	9	10
1. Epifanio Martinez, IID, WECC, 1, 3, 4, 5, 6 2. Nando Gutierrez, IID, WECC, 1, 3, 4, 5, 6 3. Tony Allegranza, IID, WECC, 1, 3, 4, 5, 6 4. Jose Landeros, IID, WECC, 1, 3, 4, 5, 6												
5. Group	Greg Rowland	Duke Energy	X		X		X	X				
Additional Member / Additional Organization / Region / Segment Selection 1. Doug Hils, Duke Energy, RFC, 1 2. Ed Ernst, Duke Energy, SERC, 3 3. Dale Goodwine, Duke Energy, SERC, 5 4. Greg Cecil, Duke Energy, RFC, 6												
6. Group	Will Smith	MRO NSRF	X	X	X	X	X	X	X			
Additional Member / Additional Organization / Region / Segment Selection 1. MAHMOOD SAFI, OPPD, MRO, 1, 3, 5, 6 2. CHUCK LAWRENCE, ATC, MRO, 1 3. TOM WEBB, WPS, MRO, 3, 4, 5, 6 4. JODI JENSON, WAPA, MRO, 1, 6 5. KEN GOLDSMITH, ALTW, MRO, 4 6. ALICE IRELAND, XCEL, MRO, 1, 3, 5, 6 7. DAVE RUDOLPH, BEPC, MRO, 1, 3, 5, 6 8. ERIC RUSKAMP, LES, MRO, 1, 3, 5, 6 9. JOE DEPOORTER, MGE, MRO, 3, 4, 5, 6 10. SCOTT NICKELS, RPU, MRO, 4 11. TERRY HARBOUR, MEC, MRO, 3, 5, 6, 1 12. MARIE KNOX, MISO, MRO, 2 13. LEE KITTELSON, OTP, MRO, 1, 3, 4, 5 14. SCOTT BOS, MPW, MRO, 1, 3, 5, 6 15. TONY EDDLEMAN, NPPD, MRO, 1, 3, 4 16. MIKE BRYTOWSKI, GRE, MRO, 1, 3, 5, 6 17. DAN INMAN, MPC, MRO, 1, 3, 5, 6												
7. Group	Jonathan Hayes	Southwest Power Pool NERC Reliability Standards Development Team	X	X	X	X	X	X				

Group/Individual	Commenter	Organization	Registered Ballot Body Segment									
			1	2	3	4	5	6	7	8	9	10

	Additional Member	Additional Organization	Region	Segment Selection
1.	Jonathan Hayes	Southwest Power Pool	SPP	NA
2.	Robert Rhodes	Southwest Power Pool	SPP	NA
3.	Paul Abel	Oklahoma gas and electric	SPP	1, 3, 5
4.	John Allen	City Utilities of springfield	SPP	1, 4
5.	Bud Averill	Grand River Dam Authority	SPP	1, 3, 5
6.	Clem Cassmeyer	Western Farmers Electric Cooperative	SPP	1, 3, 5
7.	Paul Cox	GDS Associates	SPP	NA
8.	Willy Haffecke	City Utilities of springfield	SPP	1, 4
9.	Julie Lux	Westar Energy inc.	SPP	1, 3, 5, 6
10.	Mahmood Safi	OPPD	MRO	1, 3, 5
11.	Sean Simpson	Board of public utilities of kansas city, kansas	SPP	NA
12.	Louis Guidry	CLECO	SPP	1, 3, 5
13.	Lindsay Sheppard	Sunflower Electric Corporation	SPP	1
14.	Steve McGie	Coffeyville	SPP	NA

8.	Group	Sam Ciccone	FirstEnergy	X		X	X	X	X				

	Additional Member	Additional Organization	Region	Segment Selection
1.		M. Ferncez	FE	RFC
2.		T. Sheerer	FE	RFC
3.		D. Hohlbaugh	FE	RFC
4.		B. Orians	FE	RFC
5.		J. Chmura	FE	RFC
6.		L. Lee	FE	RFC
7.		R. Loy	FE	RFC
8.		B. Duge	FE	RFC

9.	Group	Mike Garton	Dominion	X		X		X	X				

	Additional Member	Additional Organization	Region	Segment Selection
1.	Louis Slade	Dominion Resources Services, Inc.	RFC	5, 6
2.	Randi Heise	Dominion Resources Services, Inc.	MRO	5, 6
3.	Connie Lowe	Dominion Resources Services, Inc.	NPCC	5, 6

Group/Individual		Commenter	Organization	Registered Ballot Body Segment									
				1	2	3	4	5	6	7	8	9	10
4. Michael Crowley		Dominion Virginia Power	SERC 1, 3, 5, 6										
10.	Group	Pawel Krupa	Seattle City Light Operations										

	Additional Member	Additional Organization	Region	Segment Selection
1.	Pawel Krupa	Seattle City Light	WECC	1
2.	Dana Wheelock	Seattle City Light	WECC	3
3.	Hao Li	SCL	WECC	4

11.	Group	Ron Sporseen	PNGC Small Entity Comment Group	X		X					X		

	Additional Member	Additional Organization	Region	Segment Selection
1.	Joe Jarvis	Blachly-Lane Electric Cooperative	WECC	3
2.	Dave Markham	Central Electric Cooperative	WECC	3
3.	Dave Hagen	Clearwater Power Company	WECC	3
4.	Roman Gillen	Consumer's Power Inc.	WECC	1, 3
5.	Roger Meader	Coos-Curry Electric Cooperative	WECC	3
6.	Bryan Case	Fall River Electric Cooperative	WECC	3
7.	Rick Crinklaw	Lane Electric Cooperative	WECC	3
8.	Annie Terracciano	Northern Lights Inc.	WECC	3
9.	Aleka Scott	PNGC Power	WECC	4
10.	Heber Carpenter	Raft River Electric Cooperative	WECC	3
11.	Steve Eldrige	Umatilla Electric Cooperative	WECC	1, 3
12.	Marc Farmer	West Oregon Electric Cooperative	WECC	4
13.	Margaret Ryan	PNGC Power	WECC	8

12.	Group	Dave Davidson	Tennessee Valley Authority					X				

	Additional Member	Additional Organization	Region	Segment Selection
1.	Rusty Hardison	TOM Support	SERC	1
2.	Pat Caldwell	TOM Support	SERC	1
3.	David Thompson	TVA Compliance	SERC	5
4.	Jerry Finley	Rel&Eng Engeering Stdrs	SERC	1
5.	Robert Brown	TVA Generation - Nuclear	SERC	5
6.	Tom Vandervort	TVA Generation - Fossil	SERC	5
7.	Annette Dudley	TVA Generation - Hydro	SERC	5

13.	Group	Brenda Hampton	Luminant						X			

Group/Individual		Commenter	Organization	Registered Ballot Body Segment									
				1	2	3	4	5	6	7	8	9	10
Additional Member	**Additional Organization**	**Region**	**Segment Selection**										
1. Mike Laney	Luminant Generation Company LLC	ERCOT	5										
14.	Group	Frank Gaffney	Florida Municipal Power Agency	X		X	X	X	X				
Additional Member	**Additional Organization**	**Region**	**Segment Selection**										
1. Timothy Beyrle	City of New Smyrna Beach	FRCC	4										
2. Jim Howard	Lakeland Electric	FRCC	3										
3. Greg Woessner	Kissimmee Utility Authority	FRCC	3										
4. Lynne Mila	City of Clewiston	FRCC	3										
5. Joe Stonecipher	Beaches Energy Services	FRCC	1										
6. Cairo Vanegas	Fort Pierce Utility Authority	FRCC	4										
7. Randy Hahn	Ocala Utility Services	FRCC	3										
15.	Group	Jennifer Eckels	Colorado Springs Utilities	X		X		X	X				
Additional Member	**Additional Organization**	**Region**	**Segment Selection**										
1. Charles Morgan	Colorado Springs Utilities	WECC	3										
2. Lisa Rosintoski	Colorado Springs Utilities	WECC	6										
3. Paul Morland	Colorado Springs Utilities	WECC	1										
16.	Individual	Jim Eckelkamp	Progress Energy	X		X		X	X				
17.	Individual	Cole Brodine	Nebraska Public Power District	X		X		X					
18.	Individual	Sandra Shaffer	PacifiCorp	X		X		X	X				
19.	Individual	Antonio Grayson	Southern Company	X		X		X	X				
20.	Individual	Brandy A. Dunn	Western Area Power Administration	X					X				
21.	Individual	Michelle D'Antuono	Ingleside Cogeneration LP					X					
22.	Individual	Michael Falvo	Independent Electricity System Operator		X								
23.	Individual	Jennifer Wright	San Diego Gas & Electric	X		X		X					
24.	Individual	Dale Dunckel	Public Utility District No. 1 of Okanogan County	X									
25.	Individual	Joe Petaski	Manitoba Hydro	X		X		X	X				
26.	Individual	Kenneth A Goldsmith	Alliant Energy				X						
27.	Individual	Thad Ness	American Electric Power	X		X		X	X				

Group/Individual		Commenter	Organization	Registered Ballot Body Segment									
				1	2	3	4	5	6	7	8	9	10
28.	Individual	Ed Davis	Entergy Services	X		X		X	X				
29.	Individual	Anthony Jablonski	ReliabilityFirst										X
30.	Individual	Maggy Powell	Exelon Corporation and its affiliates	X		X		X	X				
31.	Individual	Eric Salsbury	Consumers Energy			X	X	X					
32.	Individual	Chris Searles	BAE Batteries USA							X	X		
33.	Individual	Kevin Luke	Georgia Transmission Corporation	X									
34.	Individual	Brad Harris	CenterPoint Energy										
35.	Individual	Steven Wallace	Seminole Electric Cooperative, Inc	X			X	X	X				
36.	Individual	Kirit Shah	Ameren	X		X		X	X				
37.	Individual	Laurie Williams	Public Service Company of New Mexico	X		X		X	X				
38.	Individual	Steve Alexanderson P.E.	Central Lincoln			X	X					X	
39.	Individual	Wayne E. Johnson	EPRI										
40.	Individual	Bob Thomas	Illinois Municipal Electric Agency				X						
41.	Individual	Travis Metcalfe	Tacoma Power	X		X	X	X	X				
42.	Individual	Jonathan Meyer	Idaho Power Company	X		X							
43.	Individual	Stephen J. Berger	PPL Generation, LLC on behalf of its Supply NERC Registered Entities					X					
44.	Individual	Andrew Z. Pusztai	American Transmission Company, LLC	X									
45.	Individual	Martin Bauer	US Bureau of Reclamation					X					
46.	Individual	Darryl Curtis	Oncor Electric Delivery	X									
47.	Individual	d mason	HHWP	X				X					
48.	Individual	Tony Kroskey	Brazos Electric Power Cooperative	X									
49.	Individual	Alice Ireland	Xcel Energy	X		X		X	X				
50.	Individual	Brett Holland	Kansas City Power & Light	X		X		X	X				
51.	Individual	William Cantor	TPI										

1. **In response to stakeholder input, the SDT made several changes to the standard and associated definitions as detailed below:**
   - **Revised the "Inspect" element of the definition of Protection System Maintenance Program (PSMP), the definition of the term Unresolved Maintenance Issues, and the definition of the term Countable Event.**
   - **Revised Clause 4.2.5.4 of the Applicability section of the standard.**
   - **Revised Table 1-2 "Component Type - Communications Systems."**
   - **Revised Tables 1-4a, 1-4b, 1-4c, 1-4d, and 1-4f "Component Type - Protection System Station dc Supply…."**

   Do you agree with these changes? If not, please indicate which changes you do not agree with and provide specific suggestions in the comment area for improvements that would allow you to support the standard.

Summary Consideration:

Some commenters continued to object to various activities and/or intervals within the tables. The drafting team made several changes detailed below in response to these comments.

1. One interval was changed – the interval for the activity in Table 1-2 for unmonitored communications systems was changed from 12 years back to 6 years as it had been in all previous postings. This change promotes consistency with similar activities within Table 1-1 (Protective Relays).
2. The language in two activities in Table 1-2 was changed from "channels" to "communications systems".
3. The language in the Component Attributes in the last row of Table 1-2 was modified to read: "Any communications system with all of the following:" to clarify that all must be present to use the related intervals and activities.
4. In Table 1-4e, a redundant "only" was removed from the Component Attributes in the last row.

A few commenters continued to contrast the Applicability (4.2.1) with the Interpretation represented in PRC-005-1b. The drafting team responded, but no changes were made.

Several comments were offered on the informational posting of the draft SAR to revise PRC-005-2 to add reclosing relays. The drafting team responded, but no changes were made.

Organization	Yes or No	Question 1 Comment

Organization	Yes or No	Question 1 Comment
Bonneville Power Administration	No	1. BPA believes the term communications system and channel needs to be clarified as to whether the intent is the communications system, a channel on the telecommunication channel, the teleprotection channel, or the teleprotection function. 2. A. Minimum battery maintenance interval is to assure that the battery plant will perform as needed, and obtain a reasonable confidence that it will continue acceptable performance until the next maintenance evaluation. Typically, any utility VLA battery application, steady state float charge/long duration discharge, a Monthly or Quarterly maintenance is excessive given a proper design/maintenance program (IEEE 450, 484, 485). There is a 60 year proven history of this. BPA recognizes that there will be specific VLA battery installations that will be required beyond this minimum. BPA recommends rolling the 4 month maintenance into the 18 month maintenance schedule. B. The scientific vetted method of determining a VLA batteries current performance, and projected performance, is a capacity test. This has been scientifically verified at least 10 times since 1919, with consistent results. This approach is consistent with the IEEE 450, as well as many other standards, and is supported by the industry. If an alternate approach using measured parameters to predict current and future battery performance is to be allowed, then it must assure the same result. C. Battery monitoring does enable measurements to be made automatically with greater frequency. Additionally it provides the ability to collect, store, report, and analyze data from the battery even during an outage. It does not mitigate the necessity to perform battery maintenance. If battery monitoring is performed mandatory maintenance should also be required on the monitor.
Response: Thank you for your comments.		

Organization	Yes or No	Question 1 Comment
1. The SDT has modified "channel" to "communications system" in Table 1-2 in response to your comment. Discussion was also added to Section 15.5.1 of the Supplementary Reference and FAQ Document to explain "channel". 2. See below: A. The drafting team disagrees with your assertion that the 4 month interval should be extended to the 18 month maintenance schedule for performance of maintenance activities. The 18 month maximum maintenance interval for the unmonitored VLA battery used in a Protection System station dc supply is too long for verification that there is any voltage on the dc supply, that each cell of the unmonitored station battery is inspected to see that it has electrolyte in it, or that the unmonitored dc supply is inspected for unintentional dc grounds. B. The drafting team agrees with you that the performance capacity test is a well proven method to determine the capacity of a station battery and provides an indication of the health of the battery. However, there are other measurements that are indicative of battery health and performance that when trended to the station battery baseline and examined along with the other maintenance activities required in Table 1-4 of the standard can indicate that station battery can perform as manufactured. By trending periodically measured properties indicative of battery performance while serving its Protection System, the Transmission Owner, Generator Owner or Distribution Provider can develop a condition based method to determine (1) when a station battery requires a capacity test (instead of performing a capacity test on a predetermined, prescribed interval), (2) when an individual cell or battery unit should be replaced, or (3) if the station battery should be replaced without performing a capacity test, based on the analysis of the trended data. C. The drafting team agrees that, "battery monitoring does enable measurements to be made automatically with greater frequency. Additionally it provides the ability to collect, store, report, and analyze data from the battery even during an outage." Besides these positive qualities it alleviates the necessity to physically perform - in the station - most of the battery maintenance activities listed in Table 1-4 (see Table1-4 (f)). However, the inspection of the battery, its cells and the physical condition of the battery rack are mandatory maintenance activities that must be performed by the maintenance workforce at the station or via remote control. Concerning the maintenance of the monitoring system, please refer to Table 2 (Alarming Paths and Monitoring) of the standard for the mandatory maintenance that is required on the monitor.		
Imperial Irrigation District (IID)	No	IID does not agree with the proposed changes to the definition of Inspect using the word Examine and suggests using Visual Examination instead.
Response: Thank you for your comments. The SDT believes the word 'Examine' is correct.		

Organization	Yes or No	Question 1 Comment
Western Area Power Administration	No	The Standard Drafting team has made changes to the battery maintenance tables 1-4 (a-f) that does not reflect the extensive re-wording of the Supplemental Reference/FAQ document or address the posted recommendations of IEEE Battery Task Force. The industry needs clear, concise maintenance tasks, intervals and standards for their maintenance programs that are developed and tested by industry experts such as IEEE and EPRI.
Response: Thank you for your comments. The changes to maintenance tables 1-4 (a-f) were made as a result of conversations with members of the IEEE Battery Task Force and their recommendations to the drafting team. The drafting team disagrees with the assertion that the changes to the tables do "not reflect the extensive re-wording of the Supplementary Reference and FAQ document." The drafting team considered the IEEE Battery Task Force Recommendations and revised the Standard with the assistance of several of their members (see the drafting team response posted on the NERC site). The drafting team believes that the Component Attributes, Maximum Maintenance Intervals and Maintenance Activities of Table 1-4 are clear and concise. If an owner has a question concerning how to perform any maintenance activity listed in the table, the Supplementary reference and FAQ document along with IEEE and EPRI documents provide unambiguous and succinct examples of how to perform the activity. This standard is not intended to instruct the Transmission Owners, Generator Owners or Distribution Providers on how to perform the minimum maintenance activates listed in the tables. PRC-005-2 must plainly and tersely tell the owners what they must do - not how to do it.		
American Electric Power	No	The first column, third row of Table 1-2 should be clarified to indicate whether the bulleted items are related by an "or" clause or an "and" clause. For example, must the communication system have either or both of those attributes for it to be considered?
Response: Thank you for your comment. We are requiring both bullets to be applicable and have changed the wording to better reflect our intention.		
ReliabilityFirst	No	ReliabilityFirst offers the following comments related to the bullet points in Question 1:

Organization	Yes or No	Question 1 Comment
		a. Bullet 1 - Agree with definition revisions b. Bullet 2 - Agree with clause 4.2.5.4 c. Bullet 3 - Disagree with revised Table 1-2 "Component Type - Communications Systems." The revision increased the maximum time for unmonitored systems to 12 years. However, communication failures correspond to one of the top three causes of Misoperations. The revised last row of the Table 1-2 still permits continuous monitoring to be substituted for testing. It is not clear that the available monitoring can actually identify the health of many of the components that can fail in a power line carrier communication system. RFC believes more research is needed to substantiate the 12 calendar year maintenance interval for unmonitored communications systems. d. Bullet 4 - Disagree with revised tables 1-4a, 1-4b, 1-4c, 1-4d, and 1-4f "Component Type - Protection System Station dc Supply...." The changes appear to largely ignore the recommendations of the IEEE Stationary Battery Committee.
Response: Thank you for your comments. A. Thank you. B. Thank you. C. The SDT agrees with your comment and has changed the maximum interval for this activity back to 6 calendar years. D. The changes to maintenance tables 1-4 (a-f) were made as a result of conversations with members of the IEEE Battery Task Force and their recommendations to the drafting team. The drafting team considered the IEEE Battery Task Force Recommendations and revised the standard with the assistance of several of their members (see the drafting team response posted on the NERC site).		
BAE Batteries USA	No	I agree with the basic changes, but recommend that a slight modification be made to Tables 1-4(a) and 1-4(b). In the box defining the 18 calendar Months or 6 Calendar Years, the portion in parentheses (e.g. internal ohmic values or float current) should be changed to (e.g. internal ohmic values or

Organization	Yes or No	Question 1 Comment
		float current in concert with other accepted measurements).
Response: Thank you for your comments. The drafting team disagrees and believes that examination of other accepted measurements and inspection results (indicative of battery performance) are a part of trending to the station battery baseline. This same inference applies to the interpretation of the results of a performance or modified performance capacity test for determining whether a station battery should be replaced or cells removed. Please see section 15.4 of the Supplementary Reference and FAQ document for a further discussion of this topic.		
Central Lincoln	No	Central Lincoln agrees with most of the changes except for the change from "as designed" to "as manufactured" in the Station DC supply table. The concern is not high enough to warrant a negative ballot, and we appreciate the difficulty the SDT has had on this issue with IEEE. The "as manufactured" performance may be interpreted as the battery's capacity when new and fully charged. Of course a properly engineered system will be based on a future aged battery capacity, reduced from the brand new capacity. We prefer "as designed," but this might lead a CEA to ask for design documentation an entity may have not retained. In the end, it is not the manufactured or design capacity that matters, it is the battery's ability to power the protection systems and trip the breakers. We suggest "as manufactured" be changed to "as needed."
Response: Thank you for your comment. One of the reasons that "as designed" was changed to "as manufactured" is as you discussed. If "as designed" is used it will be difficult for the owner to determine the original design for the dc system, making it difficult for an owner during an audit. Just like the term "as designed" is difficult to document, "as needed" will also be harder for the owner to document than "as manufactured." See question "Why is it necessary to verify the battery string can perform as manufactured?" in Section 15.4 of the Supplementary Reference and FAQ document for a further explanation of this change.		
EPRI	No	1. Table 1-4a - Verify that the station battery can perform as manufactured by evaluating the measured cell/unit internal ohmic values against the baseline values of each cell.-and-Verify that the station battery can perform as manufactured by conducting a performance capacity test of

Organization	Yes or No	Question 1 Comment
		the entire battery bank. 2. Table 1-4b - Verify that the station battery can perform as manufactured by evaluating the measured cell/unit internal ohmic values against the baseline values of each cell.-or-Verify that the station battery can perform as manufactured by conducting a performance capacity test of the entire battery bank. 3. Table 1-4c - Verify that the station battery can perform as manufactured by evaluating the measured cell/unit internal ohmic values against the baseline values of each cell.-and-Verify that the station battery can perform as manufactured by conducting a performance capacity test of the entire battery bank.
Response: Thank you for your comments: 1. The standard drafting team believes the "or" of table 1-4(a) should not be replaced with the "- and -" as stated in your comment. The station battery owner of a VLA battery should be allowed to perform either of the two maintenance activities listed in table 1-4(a) to be compliant with the standard, and that "cell/unit measurements indicative of battery performance (e.g. internal ohmic values or float current)" should remain in the standard. 2. The standard drafting team agrees that the "-or-"should remain as you suggested in your comment. This will allow the owner of a VLRA battery to choose compliance by performing either of the two maintenance activities at their maximum maintenance intervals listed in table 1-4(b). 3. Because of the marked difference in the aging process of lead acid and nickel-cadmium station batteries the drafting team does not believe that trending ohmic values against the baseline values of each cell, and conducting a performance capacity test of the entire battery bank is the appropriate maintenance activity for NiCad Batteries to 'Verify' that the station battery can perform as manufactured. The only appropriate maintenance activity in Table 1-4(c) at the maximum maintenance interval of 6 calendar years is to "Verify that the station battery can perform as manufactured by conducting a performance or modified performance capacity test of the entire battery bank."		
Illinois Municipal Electric Agency	No	Illinois Municipal Electric Agency supports comments submitted by Florida Municipal Power Agency. IMEA appreciates SDT efforts, and supports the overall refinements in PRC-005-2; however, the inconsistency between 4.2.1 and the FERC-approved interpretation of PRC-005-1b needs to be resolved

Organization	Yes or No	Question 1 Comment
		to avoid confusion. This issue has implications for smaller entities in particular.
Response: Thank you for your comments. The SDT believes that the Applicability 4.2.1 as stated in PRC-005-2 is correct and supports the reliability of the BES. The SDT believes all Protection Systems installed for the purpose of detecting faults on the BES need to be maintained per the requirements of PRC-005-2. The SDT observes that the approved Interpretation addresses the term, "transmission Protection System", and notes that this term is not used within PRC-005-2; thus the Interpretation does not apply to PRC-005-2. Please see Section 2.3 of the Supplementary Reference and FAQ document for additional discussion.		
PPL Generation, LLC on behalf of its Supply NERC Registered Entities	No	See Question 3 Comments
Response: Thank you for your comments. Please see the response to your Question 3 comments.		
TPI	No	See IEEE Stationary Battery Committee Letter dated 23 March 2012
Response: Thank you for your comments. The drafting team considered the IEEE Battery Task Force Recommendations and revised the standard with the assistance of several of their members (see the drafting team response posted on this project's page of the NERC website).		
Tennessee Valley Authority	No	
MRO NSRF	Yes	While we agree with the changes made, we believe that table 1-4 should include in the 18 calendar month maintenance activities: 1) Setting the battery charger to equalize, and 2) Inspect battery charger components for leakage and or damage. These additional steps would verify the ability of the battery charger to operate as needed.
Response: Thank you for your comments. Because all battery chargers used in Protection Systems do not have equalize settings or have components that leak, the drafting		

Organization	Yes or No	Question 1 Comment
team does not believe your recommendation is appropriate for this standard.		
Southern Company	Yes	Related to the changes identified in the Battery Tables: 1. We do not see that the change from "as designed" to "as manufactured" really changed the meaning of the battery capability to delivery its rated capacity. We would like the SDT to consider the following language: "verify that the station battery can provide adequate power to the Protection System by conducting....." 2. For Generating Plant Batteries, we feel as though that the only way to prove that a generation battery can deliver what it is supposed to be able to deliver for "All" of its functions is by conducting a capacity test". We would like the SDT to consider adding such a Note to the battery tables and/or make the statement in the FAQ document.
Response: Thank you for your comments: 1. To "verify that the station battery can provide adequate power" for a battery serving a generating station dc supply or a station dc supply that has dc loads considerably greater than the Protection System requirements may appear to be a good choice; however, the use of "adequate power" makes it difficult for the Generator Owner to determine the original design of the dc system and show an auditor that "adequate power" can be delivered to the dc system by the battery. For this reason and others explained in the Supplementary Reference and FAQ document under the question "why is it necessary to verify the battery string can perform as manufactured?" The drafting team believes that perform as "manufactured" is the best wording for the standard. 2. Your concerns about large amp-hour batteries used in generating stations and transmission stations with large auxiliary loads was addressed in the drafting team's response to the Chair of the IEEE Stationary Battery Committee, which stated: "In contrast to the Transmission Owner battery design function, a Generator Owner's battery likely feeds other critical loads such as DC powered oil pumps, seal oil pumps, and other DC control power loads necessary to safely shutdown a power plant following a loss of AC power. In the case of nuclear plants, these DC loads could include motor operated valves and other loads related to nuclear safety. For the Generator Owner, the design load profile for the battery is a long duration, deep discharge of the battery. While a cell ohmic value trending program might be adequate to prove that the Generator Owners battery could fulfill its Protection System function, the Generator Owner might want to		

Organization	Yes or No	Question 1 Comment
validate the deep discharge capability of the battery by routine periodic capacity testing to prove the battery's adequacy at providing power to those long duration loads critical for plant shutdown. The PSMTSDT believes that this deep discharge battery capacity test approach will prove the battery can meet its function relative to the plant Protection System without also having a trending program for cell ohmic values."		
Ingleside Cogeneration LP	Yes	Ingleside Cogeneration LP agrees that the changes described above make PRC-005-2 clearer and less ambiguous. We believe that this will result in far fewer violations related to administrative or documentation errors - and focus on those cases which actually may impair BES reliability.
Response: Thanks for your support.		
San Diego Gas & Electric	Yes	TABLE 1-5: Similar to the distributed under-frequency load-shedding relays, SPS control circuitry should only be regulated to verify the integrity of the control circuits from the relay to the lockout or auxiliary relay that is used to trip the circuit breakers, but not to the circuit breakers themselves. Owners of SPS control circuitry should have the option of testing these schemes using test procedures that will confirm the control circuitry through the completed trip circuit is continuous and that the circuit breaker will operate when required. Often times the operation of the circuit breaker is confirmed by operation through other protection systems and the SPS function is a parallel path that can be verified without operating the circuit breaker. This change would allow the Transmission Owner to eliminate equipment outages required to test this scheme or the risk caused by removing the SPS for energized testing.
Response: Thank you for your comments. The table only requires that the SPS control circuit path including the trip coil of the breaker be verified with a 12 year maximum interval. The testing does not have to be done all at once; the maintenance activities in the table can be performed in segments and are complete as long as the entire circuit is tested within the interval. Section 10 of the Supplementary Reference and FAQ document provides additional discussion on this.		
Alliant Energy	Yes	While we agree with the changes made, we believe that Table 1-4 should

Organization	Yes or No	Question 1 Comment
		include in the 18 month maintenance activities more checks on Battery Chargers. Based on EPRI data and vendor recommendation we believe that 1) Setting the Battery Charger to equalize, and 2) Inspect battery charger components for leakage and/or damage should be added. These additional steps would better verify the ability of the battery charger to operate as needed.
Response: Thank you for your comments. Because all battery chargers used in Protection Systems do not have equalize settings or have components that leak, the drafting team does not believe your recommendation is appropriate for this standard.		
Ameren	Yes	We believe that the SDT has improved the definitions with these changes and we fully support them. In addition, we also support the Table 1-2 Communication Systems changes based on our experience, and the Station dc Supply changes in the five Tables 1-4a, 1-4b, 1-4c, 1-4d, and 1-4f because they are realistic and consistent with our experience.
Response: Thank you for your support.		
Public Service Company of New Mexico	Yes	1. PNM seeks clarification on the revised Clause 4.2.5.4 of the Applicability section of the standard. - "Protection Systems for station service or excitation transformers connected to the generator bus of generators which are part of the BES, that act to trip the generator either directly or via lockout or tripping auxiliary relays." Will Auxiliary Transformers that are directly connected to the generator bus of generators which are part of the BES and that step down to distribution level voltage & perform similar functions as that of station service transformer fall under this clause?
Response: Thank you for your comments. If the cited Protection Systems trip the generator, they are applicable to the requirements of PRC-005-2 and maintained accordingly.		
Brazos Electric Power Cooperative	Yes	Please see the formal comments submitted by ACES Power Marketing.

Organization	Yes or No	Question 1 Comment
Response: Thank you for your comments. Please see the response to ACES Power Marketing.		
Northeast Power Coordinating Council	Yes	
ACES Power Marketing Standards Collaborators	Yes	
Duke Energy	Yes	
Southwest Power Pool NERC Reliability Standards Development Team	Yes	
FirstEnergy	Yes	
Dominion	Yes	
PNGC Small Entity Comment Group	Yes	
Luminant	Yes	
Colorado Springs Utilities	Yes	
Nebraska Public Power District	Yes	
PacifiCorp	Yes	
Independent Electricity System Operator	Yes	
Public Utility District No. 1 of	Yes	

Organization	Yes or No	Question 1 Comment
Okanogan County		
Manitoba Hydro	Yes	
Consumers Energy	Yes	
Georgia Transmission Corporation	Yes	
CenterPoint Energy	Yes	
Seminole Electric Cooperative, Inc	Yes	
Tacoma Power	Yes	
Idaho Power Company	Yes	
American Transmission Company, LLC	Yes	
US Bureau of Reclamation	Yes	
Oncor Electric Delivery	Yes	
Xcel Energy	Yes	
Kansas City Power & Light	Yes	
HHWP		no comment

2. The SDT made complementary changes in the "Supplementary Reference and FAQ Document" to provide supporting discussion for the Requirements within the standard. Do you have any specific suggestions for further improvements?

Summary Consideration:

Commenters suggested a variety changes to the Supplementary Reference and FAQ document. The SDT appreciated the feedback and made numerous modifications to the document ranging from correcting typographical errors to including some additional FAQ and corresponding answers, as well as presenting new and revised technical content.

Organization	Yes or No	Question 2 Comment
San Diego Gas & Electric	No	R5/M5: M5 should add "The evidence may include but is not limited to...tracking of the unresolved maintenance issue in accordance with the TO's corrective maintenance process." This alleviates the Transmission Owner from setting up a separate corrective maintenance tracking process intended solely for this regulation.
Response: Thank you for your comments. This comment is related to the standard itself and not to the Supplementary Reference and FAQ document. The Measures are intended to provide examples of evidence, and are not meant to be all-inclusive.		
Illinois Municipal Electric Agency	No	Illinois Municipal Electric Agency supports comments submitted by Florida Municipal Power Agency.
Response: Thank you for your comments. Please see the responses to Florida Municipal Power Agency's comments.		
PPL Generation, LLC on behalf of its Supply NERC Registered Entities	No	See Question 3 Comments
Response: Thank you for your comment. Please see the responses to your Question 3 comments.		
Northeast Power Coordinating Council	No	
Imperial Irrigation District (IID)	No	

Organization	Yes or No	Question 2 Comment
Duke Energy	No	
Southwest Power Pool NERC Reliability Standards Development Team	No	
Tennessee Valley Authority	No	
Colorado Springs Utilities	No	
Nebraska Public Power District	No	
PacifiCorp	No	
Ingleside Cogeneration LP	No	
Independent Electricity System Operator	No	
Public Utility District No. 1 of Okanogan County	No	
Manitoba Hydro	No	
CenterPoint Energy	No	
Seminole Electric Cooperative, Inc	No	
Tacoma Power	No	

Organization	Yes or No	Question 2 Comment
Idaho Power Company	No	
Kansas City Power & Light	No	
Bonneville Power Administration	Yes	BPA requests the drafting team to provide more detailed examples of the following for both monitoring and testing: 1. That addresses the multiple routes, and automated switching between the routes, in a typical large Telecommunications Network Cloud. This applies only if testing of the 'cloud', or a teleprotection channel through the 'cloud', is the intent of the standard. 2. That addresses the fact that many older teleprotection technologies, not only used separate test inputs/outputs, but the internal path through the equipment is unverified until the particular function is activated. I.E.: In certain technologies, a functioning 'guard' signal does not have any correlation to a functioning 'trip' signal.
Response: Thank you for your comments. 1. The intent of the standard is to verify the teleprotection channel is functional, regardless of what constitutes the channel. 2. The SDT believes that the maintenance activity in Table 1-2, "Verify operation of communication system inputs and outputs that are essential to proper functioning of the Protection System" allows the entity flexibility to maintain the various technologies that they may own. The Supplementary Reference and FAQ document addresses some of the options available, but obviously cannot provide detail on all types of equipment.		
ACES Power Marketing Standards Collaborators	Yes	Several capitalized terms in the supplementary reference document are used inconsistently with their definition or the reference to their definition is not clear. For example, "communications Systems" in the second bullet in section 2.2 uses "Systems" inconsistently with its definition. The use of "sensing Element" on page 6 is another example. We believe this is inconsistent with the definition of Element which could be a generator, transformer, circuit breaker, bus section, etc. but does not appear to be a Protection System Component. The "localized" definition of Component that is contained in the standard should also

Organization	Yes or No	Question 2 Comment
		be included in the reference document since it is not in the NERC Glossary. Use of "dc Load" on page 82 is not consistent with the definition of Load. Load is an end use customer. There are many other places in the document where there are inconsistencies with these definitions. Thus, the document needs to be further reviewed to ensure the use of the terms is consistent with their definitions.
Response: Thank you for your comments. The SDT modified the Supplementary Reference and FAQ document as you suggested.		
Dominion	Yes	The term 'Underfrequency' is capitalized in the Supplementary Reference document yet it is not included in NERC's Glossary of terms. We suggest a return to lower case. In fact, given this document is meant to be used for reference only, we question the need to capitalize any term.
Response: Thank you for your comments. The SDT modified the Supplementary Reference and FAQ document as you suggested. For consistency with the standard, the SDT will continue to capitalize terms when they are used in the context defined in the NERC Glossary of Terms.		
Luminant	Yes	The testing of non-BES breakers for plants should be discussed in the FAQ using the similar application for Distribution Providers. Luminant recommends a section for Generation Owners that describes what Elements (circuit breakers) should be tested. Luminant strongly believes that there is no additional benefit to the BES by requiring the GO to test the non-BES breakers (UAT low side and generator field breakers). These circuits are radial fed.
Response: Thank you for your comments. The FAQ discussion on testing of non-BES breakers for Distribution Providers pertains to those devices used as part of UFLS or UVLS schemes. Section 15.3.1 of the Supplementary Reference and FAQ document has been augmented to address this topic for Generator Owners.		
Southern Company	Yes	See comment on Generating Plant Batteries in Question #1.
Response: Thank you for your comments. Please see the response to your comments in Question 1.		
Western Area Power	Yes	Western Area Power Administration is appreciative of the hard work done by the SDT

Organization	Yes or No	Question 2 Comment
Administration		and NERC. We respectfully submit that the Supplementary Reference and FAQ Document should: 1. Offer guidance on establishing baselines for older battery banks 2. Be in agreement with IEEE standards for battery maintenance 3. Replace the existing CANS
Response: Thank you for your comments. 1. Please see Section 15.4.1 of the Supplementary Reference and FAQ document, specifically the question, "How is baseline established for cell/unit internal ohmic measurements?" which offers guidance on establishing baselines for older battery banks. 2. The IEEE documents to which you refer are "Recommended Practices" as explicitly stated in their titles and not mandatory standards. The SDT considered the IEEE Recommended Practices, as well as other documents, in developing the minimum requirements and maximum intervals within PRC-005-2. 3. The CANs are developed by NERC Compliance Staff to address specific currently-approved NERC Standards, and will be retired when the related standards are retired. The SDT has no control or influence regarding CANs.		
Alliant Energy	Yes	Section 15.4 of the FAQ document does an excellent job of describing the details of battery maintenance and testing, but there is essentially no description of battery charger maintenance and testing activities. We believe this section needs to be expanded to include a good description of battery charger maintenance activities as well.
Response: Thank you for your comments. While manufacturers' recommendations for maintenance of their equipment are quite diverse, the required maintenance activities within PRC-005-2 for battery chargers are: verification of the station dc supply voltage (maximum unmonitored maintenance interval 4 calendar months); and, verification of the battery charger float voltage (maximum unmonitored maintenance interval of 18 calendar months). If anomalies regarding the battery charger are found by performing these activities, relevant corrective actions should be taken.		
American Electric Power	Yes	Rather than voluminous supplementary references, we suggest adding this information, as necessary, to the standard itself. Not only would this prove beneficial by having less information housed outside of the standard, it might also help prevent

Organization	Yes or No	Question 2 Comment
		the need for future CANs and interpretation requests. Though the guidance provided in these documents may appear to be beneficial, we are troubled that the SDT feels it is necessary to provide such a volume of material outside the standard itself, and yet still consider such “references” as enforceable.
Response: Thank you for your comments. This document provides supporting discussion, but is not part of the standard and not enforceable. The SDT intends that it be posted as a reference document accompanying the standard. As established in the SDT Guidelines, the standard is to be a terse statement of requirements, and is not to include explanatory information like that included in the Supplementary Reference and FAQ document. The Supplementary Reference and FAQ document will be revised in conjunction with any revisions of PRC-005.		
BAE Batteries USA	Yes	1. On page 21 of 97,Question 7.1, "Please provide an example of the unmonitored versus other levels of monitoring available," "Every six calendar years, perform/verify the following: Battery performance test (if ohmic tests are not opted)" - add after ohmic tests "or other accepted battery measurement parameters." 2. pg 22 of 97, Example 2 "Every 18 calendar months": Add the same verbiage so that the first bullet reads: "Battery ohmic values or other accepted battery measurement parameters to station battery baseline . . ." 3. pg 23 of 97, Example 3 "Every 18 calendar months": Add the same verbiage so that the first bullet reads: "Battery ohmic values or other accepted battery measurement parameters to station battery baseline . . ." 4. pg 23 of 97, Example 3 "Every six calendar years": Add the same verbiage so that the first bullet reads: "(if internal ohmic test or other accepted battery measurement parameters to station battery baseline are not opted)" 5. pg 27 of 97, Question 8.1.2, item #4: Change the last sentence to read: "However, the methods prescribed in these recommendations cannot be specifically required because they are offered as best practice guidelines and not set as standards." 6. pg 71 of 97, Question 15.4.1, Frequently asked Questions: "How is a baseline

Organization	Yes or No	Question 2 Comment
		established for cell/unit internal ohmic measurements?" 2nd paragraph - 1st sentence, replace the word "consistent test equipment" with "the same type of test equipment." In addition, should add a final sentence at the end of this paragraph that states, "Also, in many cases, one manufacturer's 'conductance' test may not produce the same measurement results as another 'conductance' test manufacturer's equipment. Therefore, for meaningful results to an established baseline, the same instrument should always be used." 7. Page 73 of 97, Question 15.4.1, Frequently asked questions: "What conditions should be inspected for visible battery cells?" Approximately in the 7th line modify the sentence to read . . .abnormal color(which is an indicator of sulfation or possible copper contamination) . . . 8. Page 75 of 97, Question 15.4.1, Frequently asked questions: "How do I verify the battery string can perform as manufactured?" 2nd paragraph that reads "Whichever parameter is evaluated . . ." should be revised to say "Whatever parameters are used to evaluate the battery (ohmic measurements, float current, float voltages, specific gravity, performance test, or combination thereof), the goal is to determine . . . 9. Page 75 of 97, Question 15.4.1, Frequently asked questions: "How do I verify the battery string can perform as manufactured?" 5th paragraph starts, "A detailed understanding of the characteristic of a battery is also attempting to use float current as a measure of the ability of a battery . . . and ends with "to see if a trending process is recommended for determining aging of these products." The Stationary Battery Task Force recommends deleting this whole paragraph due to inaccuracies or statements that are not relevant. If a paragraph that alludes to float current is considered critically essential, then a short paragraph could be substituted which might say," Float current along with other measureable parameters can be used in lieu of or in concert with ohmic measurement testing to measure the ability of a battery to perform as manufactured. The key to using any of these measurement devices is to establish a trending line against baseline so that a documented process establishes the validity of the judgment used to determine that the battery may

Organization	Yes or No	Question 2 Comment
		perform or not perform as manufactured." 10. Page 81 of 97, Question 15.4.1, Frequently asked questions: "Why does it appear that there are two maintenance activities in Table 1-4(b) for VRLA batteries . . . .?" 3rd paragraph: "A comparison and trending against the baseline new battery ohmic reading can be used in lieu of capacity tests to determine remaining battery life. Remaining battery life is analogous to stating that the battery is still able to 'perform as manufactured.'" This might better be restated as follows: "Trending against the baseline of VRLA cells in a battery string is essential to determine approximate state of health of the battery. For example, using ohmic measurement testing as the mechanism for measuring the battery cells, then, if all the cells in the string show to be in a consistent trend line and that trend line has not risen above say a 25-30% deviation over baseline, then a judgment can be made that the battery is still in a reasonably good state of health. This judgment can assume that the battery is still able to 'perform as manufactured.' It would be wise to confirm the accepted deviation range with the manufacturer of the battery in question to assure good judgment in deciding on the state of health to perform as manufactured.' This is the intent of the "perform as manufactured six-month test' at Row 4 on Table 1-4(b)." 11. Page 81 of 97, Question 15.4.1, Frequently asked questions: [same as Item #10 above], following paragraph: Recommend using a range of 25-30% with the statement that "It would be wise to confirm the accepted deviation range with the manufacturer of the battery in question to assure good judgment' in deciding on the state of health to perform as manufactured.

Response: Thank you for your comments.

1. The SDT modified the Supplementary Reference and FAQ document on page 21 as you suggested.
2. The SDT modified the Supplementary Reference and FAQ document on page 22 as you suggested.
3. The SDT modified the Supplementary Reference and FAQ document on page 23 as you suggested.
4. The SDT modified the Supplementary Reference and FAQ document on page 23 as you suggested.
5. The drafting team agrees with your comment concerning all of the best practices of the IEEE guidelines not being requirements of the standard and incorporated your comments into the Supplementary Reference and FAQ document on page 27.

Organization	Yes or No	Question 2 Comment
6. The drafting team incorporated your comments concerning same type test equipment replacing consistent type test equipment on pages 71 & 72 of the Supplementary Reference and FAQ document. 7. The drafting team added a comment regarding color observation on page 74 of the Supplementary Reference and FAQ document. 8. The SDT modified the Supplementary Reference and FAQ document on page 75 as you suggested. 9. The SDT modified the paragraph on float current on page 75 of the Supplementary Reference and FAQ document as you suggested. 10. The SDT modified the Supplementary Reference and FAQ document based on your comment. 11. The SDT revised the Supplementary Reference and FAQ document as you suggested.		
Georgia Transmission Corporation	Yes	Recommend adding further comments on data retention. We prefer the interpretation for the maintenance cycles equaling 12 calendar years, example microprocessor protective relays. This proves the extreme of data retention. We interpret the retention period to be 24 years. Previous test record to current test record equals 12 years, and 12 more years (next maintenance cycle) before removing previous records from storage (24 years).
Response: Thank you for your comments. To be assured of compliance, the SDT believes the Compliance Monitor will need the data for the most recent performance of the maintenance, as well as the data for the preceding maintenance period. This seems to be consistent with what auditors are expecting (per the SDT's experience), and is also consistent with Compliance Process Bulletins 2011-001 and 2009-05.		
Ameren	Yes	(1) Capitalizing in some cases is inappropriate (e.g., Systems; Glossary defines System as 'A combination of generation, transmission, and distribution components.' So 'communication System' incorrectly capitalizes 'system'). (2) Page 15, we disagree with retention of maintenance records for replaced equipment as this can cause confusion. We believe that at the most the last maintenance date could be retained to prove interval between it and the test date of the replacement equipment that provides like-kind protection. (3) We request the SDT to provide a few examples of 'non-battery-based dc supply'. The SDT has previously responded that this does not include 'capacitor trip devices'.

Organization	Yes or No	Question 2 Comment
		Does the SDT mean to include M-G sets, flywheels, and / or rectifiers? Also, Emerging Technologies on page 73 is vague please clarify.
Response: Thank you for your comments. 1. The SDT revised the Supplementary Reference and FAQ document to address your comment. 2. The records for removed/replaced equipment need to be retained to provide documented evidence that the entity was in compliance for the entire compliance monitoring period. This documentation includes maintenance activities as well as maintenance intervals. 3. As noted, the drafting team previously stated that the "capacitor trip devices" on circuit breakers and reclosers are not examples of station dc supply devices using emerging technology. Some of the non-battery based energy storage devices with demonstrated prototypes for use in Protection System dc supplies are the flywheel and the fuel cell. One non-battery based dc supply commercially available in the United States and Canada uses compressed air and a capacitor to replace the electrochemical process of a station battery for supplying the dc power required for operating Protection System elements and for supplying normal dc power to the station in the event of loss of ac power.		
Public Service Company of New Mexico	Yes	The Supplementary Reference and FAQ Document has served as a valuable resource and PNM commends the drafting team's efforts in writing a comprehensive document. Section 13. Self Monitoring Capabilities and Limitations - Last but one bullet on Page 59 of the Supplementary Reference and FAQ Document is confusing and needs possible rewording and clarification. "With this information in hand, the user can document monitoring for some or all sections by extending the monitoring to include..." appears confusing.
Response: Thank you for your comments. The SDT modified the Supplementary Reference and FAQ document to address your comment.		
EPRI	Yes	Why consider the ability of the station battery to perform as manufactured? The reason the term "perform as manufactured" was used is because there is not much data available to verify actual sizing of the cells for their application. The only battery values for typical Protection systems that have a verifiable basis are the battery manufacturer's data. The only way to know when a battery needs to be replaced is to

Organization	Yes or No	Question 2 Comment
		compare measured values against manufacturer's data or other established values. To verify that the station battery can perform as manufactured is the process of determining when the station battery must be replaced or when an individual cell or battery unit must be removed or replaced. Inspections alone do not provide trending information that indicates the state of aging of a station battery. The maintenance activities listed in Table 1-4 to "verify that a station battery can perform as manufactured" are intended to provide information about the aging process of a station battery. A Transmission Owner, Generator Owner or Distribution Provider can then use the information provided by the maintenance activity to determine if testing of a station battery is required or if timely replacement or removal of the station battery or its components (cell/unit) should be accomplished. Capacity discharge testing is the only industry approved method of determining the true capacity of lead acid and nickel-cadmium station batteries. The performance capacity test of the entire battery bank listed as maintenance activities of table 1-4 provides a mechanism for trending battery discharge characteristics based on manufacturers published data. Trending discharge test results is the basis for determining the aging of a station battery serving a Protection System. Based on these results, decisions concerning replacement of a battery serving a Protection System and its components can be made by the Transmission Owner, Generator Owner or Distribution Provider. There is a marked difference in the aging process of lead acid and nickel-cadmium station batteries. The difference in the aging process of the two types of batteries is chiefly due to the electrochemical process of the battery type. Aging and eventual failure of lead acid batteries is due to expansion and corrosion of the positive grid structure, loss of positive plate active material, and loss of capacity caused by physical changes in the active material of the positive plates. However, the primary failure of nickel - cadmium batteries is because of the gradual linear aging of the active materials in the plates. The electrolyte of a nickel - cadmium battery only facilitates the chemical reaction (it functions only to transfer ions between the positive and negative plates), but is not chemically altered during the process like the electrolyte of a lead acid battery. A lead acid battery experiences continued

Organization	Yes or No	Question 2 Comment
		corrosion of the positive plate and grid structure throughout its operational life while a nickel - cadmium battery does not. Changes to the periodic measured properties of a lead acid battery when trended to a baseline can provide an indication of aging of the grid structure, positive plate deterioration, or changes in the active materials in the plate. Since aging in nickel-cadmium cells is linear, periodic measured properties of nickel-cadmium cells when trended to a baseline can provide an indication of aging of the active material in the positive plates. By trending periodic measured properties of a station battery serving its Protection System the Transmission Owner, Generator Owner or Distribution Provider can develop a condition based method to determine (1) when a station battery requires a capacity test (instead of performing a capacity test on a predetermined, prescribed interval), (2) when an individual cell or battery unit should be replaced, or (3) based on the analysis of the trended data, if the station battery should be replaced without performing a capacity test. There is a clear difference in the aging process of lead acid and nickel-cadmium batteries. The measurable properties of a nickel - cadmium battery will change more gradually than VRLA cells; therefore, periodic interval and trending to determine aging has very little industry experience, but the user should work with the battery manufacturer to determine if internal ohmic measurements can be applied to their product. While it has been proven that there is a relationship between internal ohmic measurements and cell capacity of lead acid batteries, an accurate determination of a battery's exact capacity cannot be attained by measuring its cell's internal ohmic values. However, trending internal ohmic measurement of VRLA battery cells to establish a base line is a method of trending measured properties by Transmission Owners, Generator Owners and Distribution Providers to evaluate their station battery cells for health and aging. Evaluating internal ohmic cell/unit measurements against the battery cell baseline values is an acceptable Maintenance Activity listed in tables 4-1(a) and 4-1(b) 4-1(c) to verify that the station battery can perform as manufactured as long as it is measured and trended to the baseline values at an interval less than or equal to the published Maximum Maintenance Interval of tables. Why was the term "manufactured" used instead of "designed" in the maintenance activities of tables 1-

Organization	Yes or No	Question 2 Comment
		4(a), 1-4(b), 1-4(c), 1-4(d) and 1-4(f)?The phrase "as designed" always raises the question of "who made the design requirements that are being tested to or evaluated, the manufacturer of the battery or the engineer sizing the battery? The use of the term designed when discussing a battery's ability to perform was incorrect because we did not differentiate between a performance test and a service test. The phrase "meets the design requirements" is used when discussing a service test which is a discharge test that measures a battery's capability to meet a duty cycle which was designed by the person sizing the battery. However, when talking about a performance capacity test, the test is a measure of the currents or amp-hour discharge rates based on the battery manufacturer data for the station battery being tested. The term "manufactured" used in the tables avoids the confusion caused by the term "designed" and its application to service testing. Also, when discussing internal ohmic measurement trending, "manufactured" applies to establishing a set of base line values when compared to a battery of known capacity based on the manufacturer's published data. When trending other measurable properties that assist in establishing aging, the battery manufacturer's data are used as a basis for establishment of baseline values and therefore the use of "manufactured" avoids any ambiguity that might be caused by use of the term "designed".

Response: Thank you for your comments.

The drafting team recognizes that the majority of your comments support and amplify the information contained in the Supplementary Reference and FAQ document. However, the drafting team does not agree with some of the information contained in your comments.

1. While the drafting team agrees that part of the process of determining when to replace a battery should be "to compare measured values against manufacturer's data or other established values," we disagree with the statement "the only way to know when a battery needs to be replaced is by using this maintenance activity" because it does not give credit to the role visual inspections play in the replacement process.
2. The drafting team has a broader interpretation of the term "manufactured" than that implied in your comment concerning ohmic measurement trending ("manufacturer's published data"). We believe the term "manufactured" as used in the maintenance activities of the standard also includes as you stated earlier in your comment "other established values." Just as

Organization	Yes or No	Question 2 Comment
battery manufacturers establish tolerances that when exceeded constitute further examination of the battery for replacement, test equipment manufacturers, battery owners and others have established tolerances for specific batteries that are considered valid to determine if the particular battery can perform as "manufactured." 3. As implied in your comment and by over a decade of industry experience, it has been proven that there is a relationship between internal ohmic measurements and the aging process of lead-acid batteries. No such relationship has been established for nickel-cadmium batteries. Also at this time - with the exception of the results of a capacity test - the drafting team is unaware of any published data for nickel-cadmium battery properties that can be measured and trended against the station battery baseline. The drafting team believes that either of the two maintenance activities listed in table 1-4(a) and 1-4(b) for lead-acid batteries are acceptable to verify that the station battery can perform as manufactured when conducted at the maximum maintenance intervals of the tables. However, the drafting team disagrees with your inference that table 1-4(c) for Nickel Cadmium batteries should have any other maintenance activity besides the performance or modified performance capacity test of the entire bank to verify that the station battery can perform as manufactured.		
US Bureau of Reclamation	Yes	The FAQ should clarify why the requirement for a "Summary of maintenance and testing procedures" developed by an entity is considered prescribing a methodology to meet those requirements. The entity is developing the methodology for meeting the requirements that the elements be maintained.
Response: Thank you for your comment. "Summary of maintenance and testing procedures" is terminology used in Requirement R1.2 of the existing standard PRC-005-1.1b and is not applicable to version PRC-005-2.		
Oncor Electric Delivery	Yes	On Page 81 of the Supplementary reference and FAQ Draft it appears that the drafting team changed the term "designed" to "manufactured" and then used the quotation from the previous standard's Table 1-4(b). Oncor recommends that the two statements on page 81 of the Supplementary Reference and FAQ - Draft be changed from the present version "...verify that the station battery can perform as manufactured by evaluating the measured cell/unit internal ohmic values to station battery baseline." "Verify that the station battery can perform as manufactured by conducting a performance, service, or modified performance capacity test of the entire battery bank." to a new version of the quotes based on the new version of Table 1-4(b). The new quotes should be stated as follows:"...verify that the station

Organization	Yes or No	Question 2 Comment
		battery can perform as manufactured by evaluating cell/unit measurements indicative of battery performance (e.g. internal ohmic values or float current) against the station battery baseline." "Verify that the station battery can perform as manufactured by conducting a performance or modified performance capacity test of the entire battery bank."
Response: Thank you for your comments. The SDT modified the Supplementary Reference and FAQ document based on your comments.		
Brazos Electric Power Cooperative	Yes	Please see the formal comments submitted by ACES Power Marketing.
Response: Thank you for your comment. Please see the responses to the ACES Power Marketing comments.		
Xcel Energy	Yes	The following paragraph from the top of page 71 in the FAQ should be retained. When internal ohmic measurements are taken, consistent test equipment should be used to establish the baseline and used for the future trending of the cells internal ohmic measurements because of variances in test equipment and the type of ohmic measurement used by different manufacturer's equipment. Keep in mind that one manufacturer's "Conductance" test equipment does not produce similar results as another manufacturer's "Impedance" test equipment, even though both manufacturers have produced "Ohmic" test equipment. This paragraph from page 78 (second full paragraph) should be stricken or re written. Consistency is the key when measuring and evaluating ohmic readings. Consistent testing methods by trained personnel are essential. Moreover, it is absolutely critical that personnel use the same make/model of test instrument every time readings are taken if the values are going to be compared. The type of probe, the location of the reading (post, connector, etc.) and the room temperature during the test needs to be carefully recorded when the readings are taken. For every subsequent time the readings are taken, the same make/model of the test instrument must be used, the same type of probes must be used, and the location of the reading must be the same. The first paragraph explain the consistency issue and the second then removes the ability to

Organization	Yes or No	Question 2 Comment
		use consistent equipment and rather demands that identical equipment be used. This is not a feasible position as manufacturers can and do leave the testing space and therefore the entity should be cognizant of using the appropriate compatible test equipment but to spell out that particular make/models be maintained is not acceptable and brushes against anti-trust complications by inhibiting new players in this testing space.
Response: Thank you for your comments. The SDT revised the Supplementary Reference and FAQ document to address your concerns.		
TPI	Yes	Page 81...this statement is incorrect and should be changed: "A comparison and trending against the baseline new battery ohmic reading can be used in lieu of capacity tests to determine remaining battery life." "can be used" has to be changed to "may be used". This should refer to the other FAQ to fully explain how to use ohmic measurements. Page 81...25% is not a universally accepted value. This value has to be determined by experience for a particular type/model of battery. This part of the FAQ contradicts other FAQs.
Response: Thank you for your comments. 1. The SDT revised the Supplementary Reference and FAQ document based on your comment. 2. The SDT used 25% as an example, and revised the Supplementary Reference and FAQ document for clarity. Since there are no universally accepted repositories of this information, the Protection System owner will have to determine the value/percentage where the battery cannot perform as manufactured. This is the most difficult and important part of the entire process. The paragraph on page 81 of the Supplementary Reference and FAQ document has been modified based on your comments.		
HHWP		no comment
MRO NSRF	Yes	

Organization	Yes or No	Question 2 Comment
FirstEnergy	Yes	
PNGC Small Entity Comment Group	Yes	
Central Lincoln	Yes	
American Transmission Company, LLC	Yes	

3. If you have any other comments that you have NOT provided in response to the above questions, please provide them here. (Please do not repeat comments that you provided elsewhere.)

Summary Consideration:

Some commenters continued to object to various activities and/or intervals within the tables. The drafting team made several changes detailed below in response to these comments.

1. One interval was changed – the interval for the activity in Table 1-2 for unmonitored communications systems was changed from 12 years back to 6 years as it had been in all previous postings. This change promotes consistency with similar activities within Table 1-1 (Protective Relays).
2. The language in two activities in Table 1-2 was changed from "channels" to "communications systems".
3. The language in the Component Attributes in the last row of Table 1-2 was modified to read: "Any communications system with all of the following:" to clarify that all must be present to use the related intervals and activities.
4. In Table 1-4e, a redundant "only" was removed from the Component Attributes in the last row.

A few commenters objected to the prescribed VRFs and/or VSLs. The SDT responded that these VRFs and VSLs are in accordance with guidance from FERC and NERC.

A few comments were offered regarding Data Retention, generally objecting to retaining the maintenance records for two complete maintenance intervals. The SDT responded that the data retention specifications are consistent with auditors' expectations and with Compliance Process Bulletins 2011-001 and 2009-05.

Several comments were made (some expressed as the reason for a Negative Ballot) in response to the informational posting of the draft SAR to modify PRC-005-2 to add reclosing relays. No changes were made as a result of these comments.

Organization	Yes or No	Question 3 Comment
Ameren		(1) Remove Table 1-4 batteries from the Countable Event definition. (2) Please change Table 1-4(d) title to "Component Type - Protection System Non Battery Based Station dc Supply" [delete: Using Non Battery Based Energy Storage] to be consistent with the definition.

Organization	Yes or No	Question 3 Comment
		(3) R3 & R4: Change VRF to "Medium" for the following reasons: (a) Guideline (3) - Consistency among Reliability Standards is not satisfied. The VRF_Standards_Applicability_Matrix_2012-03-01 clearly shows that comparable requirements in the standards that PRC-005-2 replaces are Medium or Lower, specifically PRC-005-1b R2 VRF is Lower, PRC-008-0 R2 VRF is Medium, PRC-011-0 R2 VRF is Lower, and PRC-017-0 R2 VRF is Lower. (b) The High Risk Requirement is not met. We are not aware that lack of Protection System maintenance alone has directly caused or contributed to bulk electric system instability, separation, or a cascading sequence of failures. (c) Guideline (4) Consistency with NERC's Definition of the Violation Risk Factor Level is not met. Many entities do not presently perform several of the proposed minimum maintenance activities, and/or perform maintenance activities at greater than the PRC-005-2 maximum interval. Yet BES system instability, separation, or cascading sequence of failure events continues to be extremely rare. (4) Measure M3 on page 6 should only apply to 99.5% of the components. We strongly advocate the SDT to revise and state: "Each ... shall have evidence that it has implemented the Protection System Maintenance Program for 99.5% of its components and initiated...." We believe l that PRC-005-2 unrealistically mandates perfection without providing technical justification. A basic premise of engineering is to allow for reasonable tolerances, even Six Sigma allows for defects. Requiring perfection may well harm reliability by distracting valuable resources from higher priority duties concerning the Protection System. Note that we are not suggesting for the VSL to be changed. Our proposed reasonable tolerance sets an appropriate level of performance expectation. We disagree with the notion that this is "non-performance".
Response: Thank you for your comments. 1. The SDT believes that R1.1 is very explicit (All batteries associated with the station dc supply Component Type of a Protection System shall be included in a time-based program) and has precedence over the Countable Event definition. However, the		

Organization	Yes or No	Question 3 Comment
		drafting team does not agree that Table 1-4 should be removed from the Countable Event definition; Table 1-4(d) addresses non-battery-based energy storage devices, which can use a performance based program. 2. The SDT sees no appreciable improvement in the standard with your proposed change and respectfully declines to modify the standard. The drafting team believes the words "Energy Storage" in the title of Table 1-4(d) better conveys the role or circumstance of not having a battery in the dc supply, more so than using the wording from the latest version of the definition of Protection System (non-battery-based dc supply). 3. The SDT believes that the assigned VRFs are correct, as explained below: a. The SDT believes the requirements of PRC-005-2 do not map, one-to-one, with the requirements of the legacy standards, each of which comingle various attributes addressed within the new standard; thus, a requirement – to – requirement comparison of VRFs is irrelevant. b. The SDT believes that failure to implement and follow its PSMP could cause or contribute to bulk electric system instability, separation, or a cascading sequence of failures. c. The SDT believes that failure to implement and follow its PSMP could cause or contribute to bulk electric system instability, separation, or a cascading sequence of failures. **4.** VSLs define the degree to which compliance with a requirement was not achieved. Anything less than 100% constitutes a violation.
ACES Power Marketing Standards Collaborators		-1- The data retention requirements for Requirements R2, R3, R4, and R5 are not consistent with NERC Rules of Procedure. Section 3.1.4.2 of Appendix 4C – Compliance Monitoring and Enforcement Program states that the compliance audit will cover the period from the day after the last compliance audit to the end date of the current compliance audit. The data retention requirements compel the registered entity to retain documentation for the longer of "the two most recent performances of each distinct maintenance activity for Protection System Components, or all performances of each distinct maintenance activity for the Protection System Component since the previous scheduled audit date". Given that many of the maximum maintenance intervals exceed audit periods for responsible entities, an entity could be required to retain data previous to its last audit, which is not consistent with the Rules of Procedure. We suggest changing this such that the data only needs to be maintained since the last audit. -2- Under the "Definitions" section, for the definition of "Protection System" it is

Organization	Yes or No	Question 3 Comment
		unclear whether the bullets constitute items that are considered to be Protection Systems, elements that may be included within a Protection System, or elements which all must be included to constitute a Protection System. A statement preceding the bullets that explains their relationship to the term "Protection System" would be helpful. This clarification should at least be made within the supplementary reference document, if it cannot be made to the actual definition. -3- Requirement R1 VSLs: It is not clear why missing three component types jumps to a Severe VSL. Missing two is a Moderate VSL. Missing three should be a High VSL.
Response: Thank you for your comments. 1. To be assured of compliance, the SDT believes the Compliance Monitor will need the data for the most recent performance of the maintenance, as well as the data for the preceding maintenance period. This seems to be consistent with what auditors are expecting (per the SDT's experience), and is also consistent with Compliance Process Bulletins 2011-001 and 2009-05. 2. The definition of Protection System is expressed in the manner that FERC approved on February 3, 2012. 3. The SDT believes that missing three component types is a "significant percentage" and is in accordance with the VSL Guidelines.		
Exelon Corporation and its affiliates		1. In the response to Exelon's previous comment regarding current transformers, the SDT disagreed that test mandated by the current Standard draft seeks to measure a signal is "provided to the protective relay"; however, the test referenced in Table 1-3 merely confirms that the signal is sent and not that it reached the correct protective relay. Generation sites are built in phases, and these requirements do not ensure that the wiring of the protection system matches the prints and the intent of the engineers who designed it. Please provide a technical explanation of how this type of test for a CT will verify that the signal reaches the relay. 2. In the response to Exelon's previous comment related to the maintenance activity in Table 1-3 for PTs and CTs as they relate to electro mechanical relays the SDT disagreed that the maintenance program should be left to the discretion of the Generator Owner. Exelon further explained that In order to meet the required activity specified in PRC-005-2 draft 2 Table 1-3, the generating unit would be required to take readings with meters while the unit is operating. This practice

Organization	Yes or No	Question 3 Comment
		introduces a risk of tripping the unit inadvertently. The risk of tripping the unit while performing this maintenance activity is contrary to the intended purpose of PRC-005 and introduces a potentially adverse effect on the reliability of the BES. In its response the SDT has not provided the justification as to why performing such a high risk activity increases the reliability of the BES and justification for testing that refutes existing manufacturers recommendations. 3. In the last round of comments, the SDT did not specifically address Exelon's comments regarding the omission of "...and trips an interrupting device that interrupts current supplied directly from the BES" from the revised applicability language in Section 4.2.1. We are concerned that the SDT may not fully appreciate our concern. Without the qualification that comes from the "and..." phrase above, Exelon feels that section 4.2.1 will bring reverse-looking relays on radial transformers into scope, which are not interpreted as BES Protection Systems. By doing so, it creates a perverse incentive to disable these protection functions, even though they provide a reliability benefit, for the sake of limiting compliance exposure. Please offer a direct response to why the phrase, "...and trips an interrupting device that interrupts current supplied directly from the BES" is no longer included in 4.2.1 and clarify that non-BES relays are not considered within scope. Comments and SDT Response from last comment period (for reference):Exelon Comment: When the SDT changed the original PRC-005 applicability language from "...affecting the reliability of the BES..." to the new 4.2.1 language "...that are installed for the purpose of detecting faults on BES elements (lines, buses, transformers, etc.)", they opted to exclude the second half of this sentence taken from the PRC-005-1a Interpretation, which read "...and trips an interrupting device that interrupts current supplied directly from the BES." By doing so, the SDT failed to recognize that some Protection Systems can be responsive to faults on the BES, but still have no effect on the reliability of the BES. The change in 4.2.1 may unintentionally expand the scope of PRC-005.Depending on how Section 4.2.1 is interpreted, it could create a perverse incentive to disable, or not apply, reverse directional protection on the secondary (at voltages less than 100kV) of radially connected load-serving transformers. Such

Organization	Yes or No	Question 3 Comment
		relaying typically uses available units in a multifunction device, and while not critically necessary for fault clearing, it is applied because it adds a benefit at no incremental cost with minimal security risk, and it will not interrupt a BES element if it operates insecurely. It also improves reliability to connected distribution load, in the event a BES transmission line faults during abnormal switching, by coordinating with non-directional overcurrent relays that would otherwise interrupt the entire load. Furthermore such directional relaying would only operate after the faulted BES line is already removed from any connection at BES voltages via its high voltage (>100kV) circuit breakers. Viewed in an expansive way, the proposed 4.2.1 language could bring into scope these relays as well as tripping circuits of distribution voltage circuit breakers that are normally operated in a radial configuration. It would be reasonable for a TO to disable this relaying, rather than accept these consequences. In the previous comment period (Sept 2011), industry raised similar concerns and to most of the commenters, the SDT responded with the following statement: ” The SDT believes that the Applicability as stated in PRC-005-2 is correct and that it supports the reliability of the BES. The SDT observes that the approved Interpretation addresses the term, “transmission Protection System”, and notes that this term is not used within PRC-005-2; thus the interpretation does not apply to PRC-005-2. PRC-005-2 specifically addresses “Protection Systems that are installed for the purpose of detecting faults on BES Elements.” Please see Section 2.3 of the Supplementary Reference and FAQ document for additional discussion.” Unfortunately, this response fails to address the concerns raised above. Entergy previously suggested the following language for 4.2.1:”Protection Systems that are installed for the purpose of detecting faults on BES Elements (lines, buses, transformers, etc.) and trips an interrupting device that interrupts current supplied directly from the BES Elements.” This language is appropriate and addresses industry concerns. We ask that the SDT adopt this language as Section 4.2.1. SDT Response: The SDT believes that the Applicability, as stated in PRC-005-2, is correct and supports the reliability of the BES. The SDT observes that the approved Interpretation addresses the term, “transmission Protection System,” and notes that this term is not used within PRC-005-2; thus, the

Organization	Yes or No	Question 3 Comment
		interpretation does not apply to PRC-005-2. PRC-005-2 specifically addresses "Protection Systems that are installed for the purpose of detecting Faults on BES Elements." Please see Section 2.3 of the Supplementary Reference Document for additional discussion. Thank you for the opportunity to comment.
Response: Thank you for your comments. 1. Section 15.2 of the Supplementary Reference and FAQ document provides a technical explanation of how this type of test for a CT will verify the signal reaches the relay. 2. The SDT believes it is possible during a 12-year interval to find a reasonably low-risk opportunity to perform the required test and that performing the test satisfies FERC Order 693 "…that maintenance and testing of a protection system must be carried out within a maximum allowable interval that is appropriate to the type of the protection system and its impact on the reliability of the Bulk Power System." Please see Section 15.2.1 of the Supplementary Reference and FAQ document for examples of off-line tests that can minimize the risk you describe. 3. Reverse-looking relays (in the cited application) are not installed for the purpose of detecting faults on the BES and would not be subject to this standard. The SDT believes that the Applicability as stated in PRC-005-2 is correct and that it supports the reliability of the BES.		
Southern Company		1. We would like the SDT to consider rewording M5 as follows: The evidence may include any form of evidence indicating an entity is demonstrating efforts to correct identified Unresolved Maintenance Issues. Additionally: All of the examples of evidence should be moved to the Supp Ref doc and be there only for reference. 2. Page numbers should be visible on all pages.
Response: Thank you for your comments. 1. The SDT does not believe that the changes you suggest improve the standard. Regarding "demonstrate efforts to correct…," the SDT's intent is to allow an entity to furnish a way of addressing Unresolved Maintenance Issues without the formality and burden of a full-fledged Corrective Action Plan. 2. The SDT agrees and has referred the concern to NERC Staff for their consideration when preparing the documents for posting.		
Ingleside Cogeneration LP		Although Ingleside Cogeneration LP does not want to derail the improvements that the SDT has obviously made to PRC-005-1, we remain concerned that expansions in

Organization	Yes or No	Question 3 Comment
		scope of a BES Protection System will automatically roll over to other standards. For example, if the loss of a low voltage auxiliary transformer can trip a generator, its Protection System will be in-scope for PRC-005-2. It is not a big leap in logic to assume that the auxiliary transformer itself should be a BES Element - and subject to the whole body of CIP, MOD, IRO, and TOP standards. Our experience has been that Compliance authorities will make these assumptions, even if that was never the intent of the SDT. The effort to develop and maintain procedures, test results, and communications concerning every BES Element is not trivial - and a single instance of a missed requirement may lead to fines in the thousands of dollars. Ingleside Cogeneration is committed to take any action required to assure BES reliability, but NERC and the project teams must have evidence of its own that it is worth the cost.
Response: Thank you for your comments. The SDT believes that performing these maintenance activities will benefit the reliability of the BES.		
American Electric Power		1. As stated in our previous comments for R3, Table 1-5 notes a “mitigating device” as part of component attributes. The meaning of this phrase is open to interpretation and needs to be clearly defined. Is it a discrete device? A protection scheme? Either? The team’s response, by stating its intentions regarding this phrase, actually illustrates the need to provide clarity for this term within the standard. 2. As stated previously, under the time-based maintenance method and R3, the Entity will be required to utilize the minimum maintenance activities and maximum maintenance intervals prescribed within Tables 1-1 through 1-5, Table 2, and Table 3. Special Protection Systems, by their nature, may physically include components that are not listed in the NERC definition of Protection System and therefore are not included in the tables of PRC-005-2. The standard, as currently drafted, does not clearly provide a means for an Entity with a Special Protection System to establish both minimum maintenance activities and maximum maintenance intervals for components that have been declared by their Region as part of a Special Protection System but that are *not* included in the NERC definition of Protection System. For example, consider a Special Protection

Organization	Yes or No	Question 3 Comment
		System that is comprised of the following elements: Generating Unit Distributed Control System (DCS) - Qty 1Protective Relays - Qty 4 - Provide digital inputs to DCS Boiler Pressure Transmitters - Qty 2 - Provide analog inputs to DCS For a predetermined set of system events, the protective relays operate, indicating to the DCS that the event has occurred. If the pressure transmitters indicate that the boiler pressure exceeds a predefined threshold, the DCS responds by adjusting the analog output signals to the turbine valves. For compliance with the existing version of PRC-017-0, the owner of the above system has written a Maintenance and Testing Program that thoroughly tests the protective relays, DCS logic and analog inputs and outputs. However, under PRC-005-2, the owner of the system would not be able to use the proposed performance based method because the system does not have the required Segment population of 60 components. This leaves the owner no other option than the time based method. However, only the protective relays meet the NERC definition of Protection System and they are the only elements of this hypothetical SPS described in Tables 1-1 through 1-5. The existing PRC-005-2 draft does not contain time based activities that would be applicable to the DCS logic, analog inputs and analog outputs. Therefore, whereas the existing NERC standards demand the testing of these devices, NERC standards would no longer require their testing upon the implementation of PRC-005-2.
Response: Thank you for your comments. 1. A mitigating device is one that acts to respond as directed by a Special Protection System (SPS). It may be a breaker, valve, distributed control system, or any variety of other devices. 2. The SDT notes that the definition of a Special Protection System states "An automatic protection system designed to detect abnormal or predetermined system conditions, and take corrective actions other than and/or in addition to the isolation of faulted components to maintain system reliability." If the SPS you described meets this definition and contains Protection System components, then PRC-005-2 applies to those Protection System components.		
American Transmission Company, LLC		ATC recommends that the SDT change the text of "Standard PRC-005-2 - Protection System Maintenance" Table 1-5 on page 24, Row 1, Column 3" to: "Verify that a trip

Organization	Yes or No	Question 3 Comment
		coil is able to operate the circuit breaker, interrupting device, or mitigating device." Or alternately, "Electrically operate each interrupting device every 6 years." Basis for the change: Trip coils are designed to be energized no longer than the breaker opening time (3-5 cycles). They are robust devices that will successfully operate the breaker for 5,000-10,000 electrical operations. In addition, many utilities purchase breakers with dual redundant trip coils to mitigate the possibility of a failure. It is well recognized that the most likely source of trip coil failure is the breaker operating mechanism binding, thereby preventing the breaker auxiliary stack from opening and keeping the trip coil energized for too long of a time period. Therefore, trip coil failure is a function of the breaker mechanism failure. Exercising the breakers and circuit switchers is an excellent practice to mitigate the most prevalent cause of breaker failure. ATC would encourage language that would suggest this task be done every 2 years, not to exceed 3 years. Exercising the interrupting devices would help eliminate mechanism binding, reducing the chance that the trip coils are energized too long. The language, as currently written in Table 1-5 row 1, will also have the unintentional effect of changing an entities existing interrupting device maintenance interval (essentially driving interrupting device testing to a less than 6 year cycle).ATC continues to recommend a negative ballot since we believe that the testing of "each" trip coil will result in the increased amount of time the BES is in a less intact system configuration. ATC hopes that the SDT will consider these changes.
Response: Thank you for your comments. The SDT sees no appreciable improvement in the standard with your proposed change and respectfully declines to make the modification.		
Colorado Springs Utilities		Colorado Springs Utilities votes "negative" based on the document "Draft SAR for Phase 2 of Project 2007-17" under the section titled Brief Description of Proposed Standard Modifications/Actions, which states " The Standard Drafting team shall modify NERC Standard PRC-005-2 to add reclosing relays to the standard. In order to do so, the definition of Protection System shall be revised to include reclosing relays, the Facilities portion of the Applicability of the Standard shall be revised to describe

Organization	Yes or No	Question 3 Comment
		those reclosing relays that are included within the standard, and appropriate minimum maintenance intervals (with maximum allowable intervals) shall be added to the standard. The Standard Drafting team shall also make any other changes that are necessary to explicitly address reclosing relays, but shall not make general revisions to the standard, either in content or arrangement." Colorado Springs Utilities position is reclosing relays are used as part of the system restoration process, and should not be associated with the protection or reliability of the system. Reclosing relays should be grouped with SCADA controls of breakers and manual controls of breakers, and should be tested with the same frequency. Breaker reclosing is not used on many lines, and is disabled on many lines. Automatic Breaker Reclosing is a system enhancement, not a system requirement.
Response: Thank you for your comments. The SDT notes that the draft SAR for Phase 2 of Project 2007-17 is not applicable to the current successive ballot and was posted for informational purposes only. In Order 758, FERC directed NERC to include reclosing relays in a future version of PRC-005; the SDT developed this draft SAR to address FERC's directive.		
Duke Energy		Duke Energy votes "Negative" because we strongly object to the wording in the Applicability section 4.2.1. We believe that the wording change to PRC-005-2 draft 4 after the previous Successive Ballot but prior to the associated Recirculation Ballot expanded the reach of the standard to relaying schemes that detect faults on the BES but which are not intended to provide protection for the BES. The SDT's response to our comment directs us to Section 2.3 of the Supplementary Reference And FAQ Document which states "There should be no ambiguity: if the element is a BES element then the Protection System protecting that element should be included within this Standard." We agree with that statement, but point out that Section 4.2.1 is inconsistent with that statement, and has a much broader reach because it includes devices that detect Faults on the BES but which do NOT provide protection for the BES. Compliance audits will be driven by the words in the standard, not the explanations in the Supplementary Reference And FAQ Document. We would appreciate a response to our concern that explains the reliability benefit associated

Organization	Yes or No	Question 3 Comment
		with this expansion of scope, and which specifically addresses the following Duke Energy situation: Duke Energy's standard protection scheme for dispersed generation at retail stations would become subject to the standard due to the changes in section 4.2.1. These protection schemes are designed to detect faults on the BES, but do not operate BES elements nor do they interrupt network current flow from the BES. In the most recent draft, the relays, current transformers, potential transformers, trip paths, auxiliary relays, batteries, and communication equipment associated with the dispersed generation protection scheme would be subject to the requirements in PRC-005-2. Previous drafts of the standard would not have required Duke Energy to maintain the protection system components associated with dispersed generation schemes at retail stations in accordance to the requirements in PRC-005-2. The new wording in section 4.2.1 would add significant O&M costs and resource constraints due to the inclusion of protection system devices at retail stations without increasing the reliability of the BES. Duke Energy does not believe it was the intent of the standard to include elements that did not have an impact on the reliability of the BES. Duke Energy would prefer the following wording for Section 4.2.1: Protection Systems that are installed for the purpose of protecting BES Elements (lines, buses, transformers, etc.)".FERC's September 26, 2011 Order in Docket No. RD11-5 approved NERC's interpretation of PRC-005-1 R1 and R2, stating: "The interpretation clarifies that the Requirements are "applicable to any Protection System that is installed for the purpose of detecting faults on transmission elements (lines, buses, transformers, etc.) identified as being included in the [BES] and trips an interrupting device that interrupts current supplied directly from the BES." This interpretation is consistent with the Commission's understanding that a "transmission Protection System" is installed for the purpose of detecting and isolating faults affecting the reliability of the bulk electric system through the use of current interrupting devices."
Response: Thank you for your comments. The SDT believes the Applicability as stated in PRC-005-2 is correct and supports the reliability of the BES. All Protection Systems installed for the purpose of detecting faults on the BES need to be maintained per the requirements of PRC-005-2. The SDT observes that the approved Interpretation addresses the term, "transmission Protection System", and notes that this term is not used within		

Organization	Yes or No	Question 3 Comment
PRC-005-2; thus the Interpretation does not apply to PRC-005-2. Please see Section 2.3 of the Supplementary Reference and FAQ document for additional discussion.		
Entergy Services		Entergy provides the following comments to achieve consistency in the written standards: • Numbers indicating measurable quantities should be numbers: 95%, 5%, etc. and not spelled out. • Words indicating a specific document or entity should be capitalized: this Standard • Words indicating generic devices should not be capitalized: components, faults, monitors, misoperation • 4. If two words go together with a singular meaning they should both be either capitalized or not: Communication Systems
Response: Thank you for your comments. The SDT followed NERC's style guide for the various issues you point out.		
FirstEnergy		FirstEnergy supports the standard and thanks the drafting team for all their hard work.
Response: Thank you for your comments.		
Luminant		In addition to the revised Supplemental Reference and FAQ guide revision requested in question 2, Luminant recommends that Table 1-5; Line 1 and 4 be revised to specifically state that only BES elements (circuit breakers/interrupting devices) are to be tested. There is no benefit to the BES system for testing the non-BES breakers and some locations, trip testing of the breakers would cause a unit black-out due to unit design. Some units do not have start-up transformers. By performing these tests, there is a risk of causing unit damage while the unit is off-line. Therefore Luminant recommends that Table 1-5 be revised to only require BES breakers be tested for compliance purposes. This would be consistent with the requirements covered in Table 3 for UFLS Systems.
Response: Thank you for your comments.		

Organization	Yes or No	Question 3 Comment
The SDT revised Section 15.3.1 of the Supplementary Reference and FAQ document to address this concern, and does not believe that further revision of the standard is necessary.		
Public Utility District No. 1 of Okanogan County		In tables 1-4 with regards to station batteries. 1. DC Supply voltage. Is this reading taken off the batteries or out of the charger? Which read needs to be documented? 2. Unintentional grounds. If the charger has the ability to detect and alarm on unintentional grounds, do we need to manually check this as well? 3. In the 18 month section there is a reference to Float voltage of charger. How do we document in our procedure? Can we use SCADA? 4. In the NICAD battery section. Why can't we do impedance testing? Why only load testing? 5. In table 1-5 there is mention of "Lockout Devices" does this mean that 86 relays are being brought into scope? 6. In table 2 there is discussion with regard to Alarm paths and alarm path monitoring. Table 1-5 item 4 discusses Auxiliary Relays in the control circuit path. Typically, Auxiliary relays in this scenario are closed contacts and open when in an alarmed state. For example, a low SF6 alarm contacts on a breaker interrupts the trip circuit and prevents the breaker from operating. Does this type of auxiliary relay need to be tested every 12 years? 7. For monitoring transmission PTs- Can we measure low side voltage (13kv) PTs multiplied by the power transformer ratio to verify transmission PT accuracy? 8. Table 1-3 describes independent "measurements continuously verified by comparison" Does separate AC measurement need to be connected to same relay? or can it be connected to separate relay with comparison done in SCADA?
Response: Thank you for your comments. 1. The verification of dc voltage is simply an observation of battery voltage to prove that the charger has not been lost or is not		

Organization	Yes or No	Question 3 Comment
		malfunctioning, and the standard is indifferent as to where the voltage is actually measured. However, Section 15.4.1 of the Supplementary Reference and FAQ document suggests that this voltage be optimally measured at the battery's main terminals. 2. Per Table 1-4(f) and Table 2, if your charger has the ability to detect and alarm on unintentional grounds and meets the Table 2 requirements, no periodic inspection of unintentional dc grounds is required. 3. As explained in Section 15.4.1 of the Supplementary Reference and FAQ document, the maintenance activity of verifying the float voltage of the battery charger is not to prove that a charger is lost or producing high voltage on the station dc supply, but rather to prove that the charger is properly floating the battery within the proper voltage limits. Per Table 1-4(f) and Table 2, if your charger has the ability to monitor and alarm to ensure correct float voltage is being applied on the station dc supply and meets the Table 2 requirements, no periodic verification of float voltage of battery charger is required. The standard is proscribed from describing "how". It is left to the entity to determine what methods best address their program. 4. At this time - with the exception of the results of a capacity test - the drafting team is unaware of any published data for nickel-cadmium battery properties that can be measured and trended against the station battery baseline. 5. As explained in Section 15.3 of the Supplementary Reference and FAQ document, if the lock-out relays (86) are electromechanical type components, then they must be trip tested per Table 1-5. 6. As explained in Section 15.3 of the Supplementary Reference and FAQ document, contacts of the 86 or 94 that pass the trip current on to the circuit interrupting device trip coils will have to be checked as part of the 6 or 12 year requirement. Normally-open contacts that are not used to pass a trip signal and normally-closed contacts do not have to be verified. 7. There are multiple methods to verify the current and voltage signal values as explained in Section 15.2 of the Supplementary Reference and FAQ document. 8. It is left to the entity to determine what methods best address their program. Section 15.2 of the Supplementary Reference and FAQ document discusses various methods of conducting this comparison.
Manitoba Hydro		Manitoba Hydro is maintaining our negative vote based on our previously submitted comments (see comments submitted in the comment period ending on March 28th, 2012).
Response: Thank you for your comment. The SDT has also not changed its position from that expressed in response to the earlier comments.		
Oncor Electric Delivery		On Page 89 of the Supplementary reference and FAQ Draft document on the References page (reference #12) the correct number of the standard should read "Std

Organization	Yes or No	Question 3 Comment
		450-2010" instead of "Std 45-2010."
Response: Thank you for comment. The Supplementary Reference and FAQ document has been corrected.		
Dominion		On the Redline version of the standard, page 11 Version History; Version 2 Action, should PRC-005-1a be listed as PRC-005-1b and PRC-017 listed as PRC-017-0. Additionally, it does not appear that the Version History has captured a complete record of all revisions to this standard.
Response: Thank you for your comments. The references to the approved standards and the Version History have been corrected.		
Brazos Electric Power Cooperative		Please see the formal comments submitted by ACES Power Marketing.
Response: Thank you for your comment. Please see our responses to the comments submitted by ACES Power Marketing.		
PPL Generation, LLC on behalf of its Supply NERC Registered Entities		PPL Generation, LLC thanks the SDT for their effort on this latest version of the standard and has voted affirmatively. We offer the following comments/suggestions: 1.) PPL Generation, LLC would like more direction on how the Tables 1-3 are to be interpreted. Under the left column "Component Attributes," it is not completely clear as to which situation is applicable in order to know what "Maintenance Activity" applies. Either the table's "Component attributes" or the statement "Include the applicable monitored Component attributes applied to each Protection System Component Type consistent with the maintenance intervals specified in Tables 1-1 through 1-5, Table 2, and Table 3 where monitoring is used to extend the maintenance intervals beyond those specified for unmonitored Protection System Components" could be more prescriptive on the specific component attributes to provide entities direction as to when exactly each table is to be followed. 2.) In regards to Unresolved Maintenance Issues, PPL Generation, LLC is concerned with the use of the word "efforts" in regards to the use in "shall demonstrate efforts" in Requirement 5. We suggest that either a formal definition of "effort" is provided or more clarity is added in the Requirement 5, shown below, that gives a quantitative

Organization	Yes or No	Question 3 Comment
		scale of what constitutes an effort. "Each Transmission Owner, Generator Owner, and Distribution Provider shall demonstrate efforts to correct identified Unresolved Maintenance Issues." In its current form, "efforts" can be broadly interpreted by auditors as any number of different required actions of an entity and could potentially lead to inconsistencies in applying the term throughout the regions.
Response: Thank you for your comments. 1. The left column of the Tables describes the monitoring attributes (if any) that are available on the particular components. The center and right columns describe the related maximum maintenance intervals and minimum maintenance activities. **2.** The SDT believes there is sufficient understanding in the industry for the term "efforts" and the risk of compliance jeopardy is minimal.		
Progress Energy		1. R3 and the VSL for R3 seem to imply that an entity would not be in violation of this standard if they exceed their PSMP intervals (including any program grace) as long as the maintenance is performed within the maximum intervals prescribed within the tables. This interpretation was further supported in the previous draft of the Supplemental Reference (Section 8.2.1, page 35), which stated: "According to R3, a strictly time-based maintenance program would only be in violation if the maximum time interval of the Tables is exceeded." However, this statement has been removed from the supplemental document under the latest draft revision. Would the entity be noncompliant if they exceed their PSMP interval but not the maximum table interval? 2. Table 1-4(e): Typo. "Any Protection System dc supply used only for tripping only...." 3. Page 51, 4th paragraph, 5th line: Typo "thre" should be "three."
Response: Thank you for your comments. 1. The standard is defining maximum allowable intervals and minimum acceptable activities for a PSMP. Requirement R3 was revised recently to establish that entities must maintain their Protection System components, at a minimum, in accordance with the relevant tables. Entities are empowered to develop PSMPs that exceed these requirements if they determine such a PSMP is necessary; however, according to Requirement R3, the entity will not be held to their more-aggressive (than the tables) PSMP for compliance monitoring purposes.		

Organization	Yes or No	Question 3 Comment
2. The SDT made the suggested editorial change to Table 1-4(e). 3. The Supplementary Reference and FAQ document has been corrected as suggested.		
ReliabilityFirst		ReliabilityFirst offers the following comments for considerations: 1. General Comment a. ReliabilityFirst believes not only should there be testing required for individual components (as required Protection System Maintenance Program), ReliabilityFirst believes that the entire Protection System (consisting of all Protective relays, communications systems, Voltage and current sensing devices, etc.) should be tested as a whole. Individually each component may test successfully but while tested as a complete Protection System (through interaction between all the interdependent components), deficiencies in settings along with logic and wiring errors could be discovered. 2. Requirement R5 a. ReliabilityFirst believes the language in Requirement R5 ("...shall demonstrate efforts to correct...") is subjective and non-measurable. It will be difficult in determining what amount of "demonstration" an entity will need to provide in order to be compliant along with lack of timeframe in which the correction needs to be completed. While RFC understands it is hard to prescribe a specific timeframe/deadline (it can depend on various number of supply, process and management problems), RFC believes at a minimum, the applicable entity should be required to develop a Corrective Action Plan to address the Unresolved Maintenance Issue. ReliabilityFirst offers the following modification for consideration: "Each Transmission Owner, Generator Owner, and Distribution Provider shall put in place a corrective action plan to remedy all identified Unresolved Maintenance Issues."
Response: Thank you for your comments. 1. The SDT does not believe it feasible to craft requirements for testing an entire Protection System as a whole that would simultaneously prove performance of every component and believes such invasive testing would jeopardize BES reliability. 2. The SDT's intent is to furnish a way for an entity to address Unresolved Maintenance Issues without the formality and burden of a		

Organization	Yes or No	Question 3 Comment
full-fledged Corrective Action Plan.		
Seattle City Light Operations		SCL supports the position of WECC PNGC with regard to the position paper VRF/VSL recommendation. Specifically, it is the contention of PMGC and members that small entities with maybe 2 or 3 components within a Component Type that sustain a violation will unnecessarily be subjected to a “severe” or “high” VSL assignment due to the % based parameter. We feel the SDT did not adequately address our concerns during the last ballot/comment period. While this is a non-issue for larger entities with hundreds or thousands of individual components, we believe this exposes smaller entities to unnecessary compliance risk. 1. The PNGC Comment Group takes issue with the associated VSLs for R3. For a small entity using a time based maintenance program, even one missed interval could be enough to elevate them to a high VSL despite the limited impact on the Bulk Electric System. Consider an entity with 9 total components within a specific Protection System Component Type. One violation would mean an 11% violation rate, enough to catapult them into a High VSL. Given NERC Guidance (following), this seems to be a contradiction given the language of “...more than one” [NERC Guidance on VSL assignment: i. LOWER: Missing a minor element (or a small percentage) of the required performance. ii. MODERATE: Missing at least one significant element (or a moderate percentage) of the required performance. iii. HIGH: Missing more than one significant element (or is missing a high percentage) of the required performance or is missing a single vital component. iv. SEVERE: Missing most or all of the significant elements (or a significant percentage) of the required performance.] Thus we support the WECC PNGC suggestion to change the language for “Lower VSL” for R3 to: 'For Responsible Entities with more than a total of 20 Components within a specific Protection System Component Type in Requirement R3, 5% or fewer have not been maintained...' OR 'For Responsible Entities with a total of 20 or fewer Components within a specific Protection System Component Type, 2 or fewer Components in Requirement R3 have not been maintained...'

Organization	Yes or No	Question 3 Comment
Response: Thank you for your comments. The SDT respectfully disagrees and believes that the Standard appropriately incorporates and accounts for the system risks and burdens of maintenance for both large and small entities. The VSLs were developed in accordance with the "FERC VSL Order" and the NERC criteria; for stepped VSLs - Lower VSL is "5% or less", Medium VSL is "more than 5% up to (and including) 10%", High VSL is "more than 10% up to (and including) 15%", and Severe VSL is "more than 15%".		
Public Service Company of New Mexico		Table 1-1 Component Type - Protective Relay and Table 1-2 Component Type - Communications Systems refer to Table 2 Alarm Paths and Monitoring for monitoring related attributes. However, the maximum maintenance interval in rows referring to Table 2 in both Tables 1-1 and 1-2 is 12 calendar years whereas there is a row in Table 2 that if there is an Alarm Path with monitoring (row 2 of Table 2), no periodic maintenance is required. Does this mean that even if there is an Alarm Path with monitoring for which no periodic maintenance is required, the component type - Protective Relay or Communications Systems will still be required to be maintained within the maximum 12 calendar years interval? This appears to be contradictory especially since rows in Tables 1-3, 1-4(f), and 1-5 that refer to Table 2 have "no periodic maintenance specified" under maximum maintenance interval. This also appears to be contradictory to the text provided under bullet 1 of Section 5.2 Extending Time-Based Maintenance which states that - If continuous indication of the functional condition of the Component is available (from relays or chargers or any self-monitoring device), then the intervals may be extended, or manual testing may be eliminated." Rows referring to Table 2 in Tables 1-1 and 1-2 do not suggest that manual testing will be eliminated as it is requiring a 12 calendar year maintenance time interval even if it meets the requirements under table 2 for alarm path with monitoring. PNM recommends adding the following under Maximum Maintenance Interval to be consistent with other tables 1-3, 1-4(f), and 1-5 - "12 calendar years OR no periodic maintenance specified".
Response: Thank you for your comments. For protective relays and communications systems, the only maintenance activity in the last line of the related table is to verify those unmonitored inputs and outputs that are essential to the proper functioning of the Protection System. The SDT sees no appreciable		

Organization	Yes or No	Question 3 Comment
improvement in the standard with your proposed change and respectfully declines to modify the standard.		
Bonneville Power Administration		1. Table 1-2: Communication Systems: BPA believes that the entire section of Table 1-2 needs clarity. A channel, channel performance criteria, & communication system all have very precise definitions in the communications world. (Please refer to Supplemental Frequency AQ - Figure 1 - Typical Transmission System Diagram, Telecommunications Network Cloud)When referring to the terms in Table 1-2, if the drafting team is referring to the 'telecommunications cloud', this section is unclear. BPA believes it is clearer if the drafting team is referring to the two telecommunications equipment panels and requests documented clarification. The traditional term for this would be teleprotection channel or teleprotection function. BPA assumes the intention was teleprotection channel. BPA recognizes that the teleprotection equipment panels, in many modern cases, are built into the relay. For background information, the Telecommunications Network is composed of multiple Communication Systems (40 to 50 is not uncommon) that contain multiple thousand (5-6K) pieces of equipment. These systems and equipment are tied together with hundreds of thousands of Communication Channels and Tributaries. Most of the Channels and Tributaires have, at least a primary and backup (WECC Guideline: Design of Critical Communications Circuits), and some have multiple primary's and backups. All of these are needed to create the circuit connections, as indicated on the diagram from one teleprotection panel to another teleprotection panel. Given the above scenario - the confusion is possible. As an example, for the component attribute: 'Any unmonitored communication system necessary for the correct operation of the protective functions, and not having all the monitoring attributes of a category below.' The 4 calendar month maintenance activity is to: 'Verify that the communications system is functional.' The questions that arise are which systems, the drop system or the transport system? The whole system or just the part carrying the protective signals? What about the channels interconnecting the various systems and so on? BPA suggests clarifying: Any unmonitored teleprotection function necessary for the correct operation of the protective

Organization	Yes or No	Question 3 Comment
		functions, and not having all the monitoring attributes of a category below. The 4 calendar month maintenance activity is to: 'Verify that the teleprotection function is functional' BPA believes this is a much better approach as it identifies only that the teleprotection panels must get inputs and outputs to the relays between them. BPA believes more clarity is still needed. A simple example of an old tone based FSK transfer Trip System over a single point to point analog MW radio channel; the teleprotection panel will normally transmit a guard tone in a particular spectrum over a single radio channel to the teleprotection panel at the far end. BPA understands that one way to verify that the teleprotection function is serviceable in a 4 month maintenance activity is if the guard signal arrives at the opposing end, correct? BPA infers that this is efficient as entities can now monitor loss of guard and have a continuously monitored system which will result in performing just a12 year maintenance. Is this correct? This raises the question of the trip function. Until the trip function is energized from the relay, the circuitry sending the trip by initiating a FSK in not functioning. Does this function needs to be check in addition to the guard function? This raises the question of the MW radio channel. BPA recognizes that the FSK trip signal travels over different spectrum in the analog MW radio. Even if the radio will transmit a Guard FSK signal to the far end, it will not necessarily transmit a Trip FSK signal to the far end (a common hidden failure mode in many MW systems). Do entities need to check for guard at the far end and test that a FSK Trip signal propagates through the radio system and is received at the teleprotection panel? BPA requests clarification in the followings scenario: Using testing inputs as opposed to operating inputs that trips and guards may be initiated from a different set of inputs of the teleprotection panel, and monitored from a different set of outputs on the teleprotection panel (very common on teleprotection equipment). The test might work, but an actual Trip signal would not work (a common hidden failure mode on current available equipment). If one were to say 'good enough' for a 4 month test (and hope any auditors agree if there is ever a false operation). How about the 12 calendar year test? For a point to point analog MW radio,

Organization	Yes or No	Question 3 Comment
		there is only a single channel that can be tested for passage of guard and trip tones. If the radio is redundant, which it most likely is (WECC Guideline: Design of Critical Communications Circuits) then this has to be done twice, once for each path. Can the drafting team clarify this scenario? In a more typical real-world case, the circuit connection, between the two teleprotection panels, will transverse multiple redundant communications systems. If it crosses 4 redundant systems in the communications cloud, then there are a total of 4^2 or 16 possible communication channels, each with different test criteria, that need to be tested. Additionally, the channels are rerouted manually and automatically much faster than a 12 year cycle (daily is not uncommon). Do all these combinations need to be tested? This discussion illustrates the confusion of the current wording. BPA recommends that: If the intention is to test in the 'cloud' or the performance of the 'cloud', BPA believes there needs to be a new standard, or set of standards created to deal with the intricacies of the telecommunication cloud. If the intention was to test the teleprotection channel, BPA believes additional clarity needs to be provided to address the dynamic redundancies and rerouting of the communications system. If the intention was to test the teleprotection function BPA believes additional clarity needs to be provided to test/monitor the functions (inputs and outputs) between the teleprotection panels. 2. Table 1-4(a):VLA Battery: 4 Months/Inspect/Electrolyte Level BPA believes that for a properly designed and installed steady state float charge/long duration discharge type battery plant this is not needed. The inspection at 4 Month intervals will unearth catastrophic failures (Split cells, severe overcharging, etc...). These types of failures can happen anytime, and need to be designed around. Unless the battery plant is under high cyclic load, water usage can be handled in a 12/18 month maintenance cycle. Severe overcharging needs to be dealt with by design/maintenance practices (for example: an Appropriate high voltage alarmed with an immediate call out) since 4 months is too long to wait to detect the condition. Minor overcharging will not be detectable in a 4 month interval (and one wants to very slightly overcharge a battery verse any individual cell being

Organization	Yes or No	Question 3 Comment
		undercharged, but that is a whole different technical discussion). IEEE484 specifies ventilation should be provided for the worst-case hydrogen generation due to overcharging. Other than an inherent manufactures defect that can happen anytime 24/7, splitting cells due to sulfation build up is a slow know process that can be handled in a 12/18 month maintenance cycle with a good visual inspection. Although this is in line with IEEE450, given the specific type of battery configuration in the utility world, this is excessive. Should there be a unique battery plant design, then it is incumbent on that utility to have appropriate shorter intervals. BPA is in support of "For unintentional grounds" and recognizes that it does not apply to intentionally grounded battery systems (teleprotection systems run off of communication batteries in sites where there is no station battery {i.e.: Grand Coulee/Lower Snake}).In general there are two types of batteries used by utilities, outside of their control centers, which will be supplying protective systems. The vast majority is the station battery, which is described very well in the IEEE standards: Switchgear control battery applications typically require output current levels that vary over a relatively long period of time. The battery operates on a float charge during steady state conditions. The battery charger powers relays, indicating lights, and peripheral devices during normal conditions. Instantaneous operation of the circuit breaker and switches require battery output current. Initially, this current may be relatively high for a short duration and then reduce for an extended period of time, followed by another high operating current demand. If the charger output is lost, these low-level currents are supplied by the battery for a specified period. The second is a telecommunications battery supplying the teleprotection equipment (excluding the telecommunications batteries supplying only the communication cloud), which are described very well in the IEEE standards: Telecommunication systems are typically of high reliability, with a minimum uptime of 99.99% is often required. Although the batteries are sized for long duration discharge, short duration discharges are usually the case. Excess charging capacity is often available because of redundant charger configurations and engineered

Organization	Yes or No	Question 3 Comment
		overcapacity. The reserve battery time is usually of long duration.
Response: Thank you for your comments. 1. The SDT does not necessarily agree that the term "teleprotection" is universally used or interpreted consistently in the utility protection industry and believes its use in the standard would not improve the standard. Your comments in the complexity and intricacy of the telecommunications "cloud" are well-taken; however, it was the SDT's intent to require an overall functional test of the "cloud"-based path, but not an exhaustive test of each and every individual channel that could be involved. Yes, there is some risk in a FSK-based guard/trip scheme that the trip function may not perform even if the guard function does, but the SDT sees this risk as manageable and in line with other risks inherent in interval-based maintenance. 2. This standard is applicable to station batteries. Please see Section 15.4.1 of the Supplementary Reference and FAQ document for more discussion. The scope of this standard does not include communication site batteries. The SDT believes that PRC-005-2 strikes an appropriate balance between maintenance burden, failure modes, manufacturer recommendations and IEEE battery guidelines.		
Independent Electricity System Operator		The IESO continues to disagree with the VRF assigned to the new Requirements R3 and R4. R3 and R4 ask for implementing the maintenance plan (and initiate corrective measures) whose development and content requirements (R1 and R2) themselves have a Medium VRF. Failure to develop a maintenance program with the attributes specified in R1, and stipulation of the maintenance intervals or performance criteria as required in R2, will render R3/R4 not executable. Hence, we reiterate our request to change R3's VRF to Medium.
Response: Thank you for your comments. The SDT respectfully disagrees and contends that the consequences of failing to maintain Protection Systems in the required time frames merit a High VRF.		
PNGC Small Entity Comment Group		The PNGC Small Entity Comment Group appreciates the hard work of the Standards Development Team on this difficult and complex project. However we are disappointed with the response to our concerns over the VSL matrix and although we believe on balance this should not be the sole reason for voting "no", we find it difficult to re-cast a "yes" vote and will therefore vote "abstain" to maintain the integrity of the quorum and reflect our position. Your response to our comment;"1.

Organization	Yes or No	Question 3 Comment
		A smaller entity will have less to maintain in accordance with the standard; and, thus, the percentages are still appropriate." reflects a position that indicates are cursory and dismissive review of our concern. We would counter that because a smaller entity has less to maintain, a solely percentage violation measure is therefore inappropriate. We've appended our original comment below in addition to the SDT response. PNGC Comment:1. The PNGC Comment Group takes issue with the associated VSLs for R3. For a small entity using a time based maintenance program, even one missed interval could be enough to elevate them to a high VSL despite the limited impact on the Bulk Electric System. Consider an entity with 9 total components within a specific Protection System Component Type. One violation would mean an 11% violation rate, enough to catapult them into a High VSL. Given the "NERC Guidance (Below), this seems to be a contradiction given the language of "...more than one". a. NERC Guidance on VSL assignment: i. LOWER: Missing a minor element (or a small percentage) of the required performance ii. Moderate: Missing at least one significant element (or a moderate percentage) of the required performance. iii. High: Missing more than one significant element (or is missing a high percentage) of the required performance or is missing a single vital component. iv. Severe: Missing most or all of the significant elements (or a significant percentage) of the required performance. We suggest changing the language for "Lower VSL" for R3 to: For Responsible Entities with more than a total of 20 Components within a specific Protection System Component Type in Requirement R3, 5% or fewer have not been maintained... Or for Responsible Entities with a total of 20 or fewer Components within a specific Protection System Component Type, 2 or fewer Components in Requirement R3 have not been maintained... SDT response: 1. A smaller entity will have less to maintain in accordance with the standard; and, thus, the percentages are still appropriate.
Response: Thank you for your comments. The SDT respectfully disagrees and believes that the Standard appropriately incorporates and accounts for the system risks and burdens of maintenance for both large and small entities. The VSLs were developed in accordance with the "FERC VSL Order" and the NERC criteria; for stepped VSLs - Lower VSL is "5% or less", Medium VSL is "more than 5% up to (and including) 10%", High VSL is		

Organization	Yes or No	Question 3 Comment
"more than 10% up to (and including) 15%", and Severe VSL is "more than 15%".		
US Bureau of Reclamation		The reliability level for protection systems has been lowered by eliminating the requirement for entity defined maintenance and testing procedures. Currently the draft only prescribes that the elements are identified as to when they will be maintained. The FAQ suggested that the PRC-005 did not have sufficient specificity with regard to the PSMP requirement. The entity no longer must be able to document that they were maintained in accordance with any prescribed method, jus that they were maintained in accordance within an acceptable interval. Second, the measure for R1 does not specific what evidence is considered acceptable. This makes the standard hard to enforce.
Response: Thank you for your comments. The standard is defining maximum allowable intervals and minimum acceptable activities for a PSMP. Entities are empowered to develop PSMPs that exceed these requirements if they determine such a PSMP to be necessary. Measure M1 offers examples of documentation that should ease compliance and enforcement.		
Seminole Electric Cooperative, Inc		1. The SDT has provided ONE Protection System Component with two differing maintenance periods, the lockout (86) device. Six years is used for the lockout operation and twelve years is used for contact testing of the lockouts. Earlier the SDT had a similar arrangement with microprocessor relays, the microprocessor relay would be tested on a twelve year cycle but the microprocessor's electro-mechanical trip outputs were to be tested on a six year cycle. The SDT then made a decision that the single microprocessor asset would have a common testing cycle of twelve years, reasonably considering it a single asset with a single maintenance cycle of 12 years. To eliminate confusion with lockout relays, it is recommended that a similar decision be made by the SDT to make a single lockout relay asset have a common maintenance cycle of twelve years. The lockout relay twelve year cycle would include both the lockout operational test and the lockout relay tripping contact tests. This twelve year cycle would also be in direct maintenance alignment with other microprocessor relays and auxiliary relay testing cycles.

Organization	Yes or No	Question 3 Comment
		2. In addition, the sudden pressure relays and their integral control circuit should either be included or excluded. This is a compliance trap and will lead to many findings of non-compliance, based on sudden pressure relays not being included in many prior versions and currently not included in this version, except for their DC control circuit.
Response: Thank you for your comments. 1. The SDT believes that electromechanical lockout relays need periodic operation. As such, these devices are required to be exercised at the same 6 year interval required for electromechanical relays. The SDT recognizes the risk of human error trips when working with testing of lockout devices but believes these risks can be managed. Performance based maintenance is an option if you want to extend the intervals beyond 6 years. However, the SDT modified Table 1-5 to remove other auxiliary relays, etc, from this activity, and clarified that the verification of such devices is included within the 12-year unmonitored control circuitry verification. **2.** The trip path from a sudden pressure device is a part of the Protection System control circuitry. The sensing element is omitted from PRC-005-2 testing requirements because the SDT is unaware of industry recognized testing protocol for the sensing elements. The SDT believes that Protection Systems that trip (or can trip) the BES should be included. This position is consistent with the currently approved PRC-005-1 and with the SAR for Project 2007-17.		
Florida Municipal Power Agency		1. The SDT is still not agreeing with the applicability as interpreted and approved by FERC PRC-005-1b Appendix 1 that basically says that applicable Protection Systems are those that protect a BES Element AND trip a BES Element. The interpretation states: In these two standards, use of the phrase transmission Protection System indicates that the requirements using this phrase are applicable to any Protection System that is installed for the purpose of detecting faults on transmission elements (lines, buses, transformers, etc.) identified as being included in the Bulk Electric System (BES) and trips an interrupting device that interrupts current supplied directly from the BES. The SDT continues to ignore this FERC approved interpretation, and this omission causes us to vote Negative again. The basic issue is that some distribution protection will be swept in with the applicability of the standard, which states: 4.2.1 Protection Systems that are installed for the purpose of detecting Faults on BES Elements (lines,

Organization	Yes or No	Question 3 Comment
		buses, transformers, etc.) 2. Many (most) network distribution systems that have more than one source into a distribution network will have reverse power relays to detect faults on the BES and trip the step-down transformer to prevent feedback from the distribution to the fault on the BES. This is not a BES reliability issue, but more of a safety issue and distribution voltage issue. These relays would be subject to the standard as the applicability is currently written, but, should not be and they are currently not within the scope of PRC-005-1b Appendix 1 because the step-down transformer (non-BES) is tripped and not a BES Element (hence, the "and" condition of the interpretation is not met). There are many other related examples of distribution that might be networked or have distributed generation on a distribution circuit where such reverse power relays, or overcurrent relays with low pick-ups, are used for safety and distribution voltage control reasons and are not there for BES Reliability. To make matters worse, for these Reverse Power relays, it is pretty much impossible to meet PRC-023 because the intent of the relay is to make current flow unidirectional (e.g., only towards the distribution system) without regard for the rating of the elements feeding the distribution network. So, if these relays are swept in, and if they are on elements > 200 kV, then the entity would not be able to meet PRC-023 as that standard is currently written. So, the SDT should have adopted the FERC approved interpretation. We have made this recommendation several times before.

Response: Thank you for your comments.

1. The SDT believes the Applicability as stated in PRC-005-2 is correct and supports the reliability of the BES. The SDT observes that the approved interpretation addresses the term, “transmission Protection System”, and notes that this term is not used within PRC-005-2; thus the interpretation does not apply to PRC-005-2. PRC-005-2 specifically addresses “Protection Systems that are installed for the purpose of detecting faults on BES Elements.” Please see Section 2.3 of the Supplementary Reference and FAQ document for additional discussion.
2. In the case you cite, the transformer is likely not a BES element; thus reverse power relays, even if installed to detect a fault in the transformer rather than actually to detect transformer energizing current, would not be included (as they are not installed for the purpose of detecting a fault on the BES). Please note that reverse power relays respond to real power (watts) instead of

Organization	Yes or No	Question 3 Comment
reactive power, and fault current is highly reactive.		
Tennessee Valley Authority		This comment is regarding the Implementation Plan for Requirements R3 and R4, 1. (Page 3 of 5) of The Implementation Plan for Project 2007-17 Protection Systems Maintenance and Testing PRC-005-02. Number 1. states: For Protection System component maintenance activities with maximum allowable intervals of less than one (1) calendar year, as established in Tables 1-1 through 1-5: o The entity shall be 100% compliant with PRC-005-2 on the first day of the first calendar quarter eighteen (18) months following applicable regulatory approval, or in those jurisdictions where no regulatory approval is required, on the first day of the first calendar quarter thirty (30) months following NERC Board of Trustees adoption or as otherwise made effective pursuant to the laws applicable to such ERO governmental authorities. TVA Comment: Even though TVA has already started a plan to address this issue, it will take several years to implement automatic checkback on 541 carrier blocking sets on the TVA system. TVA performed quarterly testing from 2000 through 2007, then after data showed failures not attributed to signal margin, the test was changed to twice a year in 2008. TVA carrier failure rate has not increased since the frequency was changed in January 2008 from 4 tests/year to 2 tests/year. We suggest a graduated implementation plan for this effort similar to number 3 (being compliant 30% in 24 months, 60% in 36 months, and 100% in 48 months) on Pages 3 and 4 of 5.
Response: Thank you for your comments. If an entity's experience is that these components require less-frequent maintenance, a performance-based program in accordance with Requirement R2 and Attachment A is an option. Your comments on your failure rates seems to indicate that you are performing a failure rate analysis similar to what is required under Attachment A for performance maintenance. While it is unfortunate that you feel you cannot meet the implementation requirements, the SDT believes that the existing plan is judicious in its time frame relative to the maximum intervals required by the standard.		
Tacoma Power		1. This is a follow-up question/comment from the previous round of balloting; please see the part in all capitals. It is still unclear whether Section 15.3 permits periodically verifying DC voltage at the actuating device trip terminals as an

Organization	Yes or No	Question 3 Comment
		acceptable method of accomplishing the maintenance activity identified in Table 1-5 for unmonitored control circuitry associated with protective functions IF DC VOLTAGE IS VERIFIED AT EACH APPLICABLE SET OF ACTUATING DEVICE TRIP TERMINALS SO THAT EVERY TRIP PATH IS ADDRESSED. It is recommended that this approach be considered acceptable, provided that auxiliary relays are operated within the maximum maintenance interval. 2. In Table 1-2, does the 'channel' include the communication interface/driver that is part of the end device?
Response: Thank you for your comments. 1. The method chosen for verification is left to the entity. The second to last paragraph of Section 15.3 of the Supplementary Reference and FAQ document states: "Monitoring of the control circuit integrity allows for no maintenance activity on the control circuit (excluding the requirement to operate trip coils and electromechanical lockout and/or tripping auxiliary relays). Monitoring of integrity means to monitor for continuity and/or presence of voltage on each trip path. For Ethernet or fiber-optic control Systems, monitoring of integrity means to monitor communication ability between the relay and the circuit breaker." If your suggested activity verifies each and every individual path to the trip coil, it may be an effective method of addressing this requirement; simply checking for voltage at the trip coil may not verify all individual paths. 2. Please see Section 15.5.1 of the Supplementary Reference and FAQ document. The maintenance activities in Table 1-2 related to "channel" have been revised to "communications systems"		
BAE Batteries USA		This revision is a major improvement over the previous draft. Hopefully, the comments above are seen in the light of ensuring basic accuracy of the revised statements. They are not intended to materially change the intent of the position agreed upon at the last drafting team meeting.
Response: Thank you for your comments.		
HHWP		VSL should not be a function of "specific Protection System Component Type". VSL should look at percentage of TOTAL Protection System Components that were not tested within scheduled test date. Consider the entity with 400 Protection System Components, including 2 station battery systems. If that entity completed 399 of 400 tests within schedule and missed 1 battery test, the VSL would be high or severe.

Organization	Yes or No	Question 3 Comment
		Alternatively, if the entity completed 399 of 400 tests, but the missed test was one of 200 protective relays, the VSL would be low. There is no assurance though that the missed battery test resulted in higher risk for the BES than the missed protective relay test. As a result the relationship between VSL and the degree of violation severity lacks predictability.
Response: Thank you for your comments. The SDT disagrees because a battery supplies control power to numerous protective schemes, failure to ensure that the battery is fit for duty is more egregious than missing one component of numerous schemes.		
Consumers Energy		1. We agree with the purpose in section 3 of the Standard. However, section 4.2.1 expands the scope from "affecting the reliability of the Bulk Electric System" to "detecting Faults on BES Elements". In our opinion, the Applicability should be limited to the stated Purpose. Expanding the scope as is done in 4.2.1 greatly increases the number of Protection Systems covered without an increase in reliability of the BES. We prefer the applicability as expressed in Appendix 1 of PRC-005-1b. 2. We suggest changing "Component Type" in R1.2 to something similar to "Segment" as defined within the Standard. A "Component Type" limits to one of five categories, whereas a "Segment" must share similar attributes. 3. In item 2 of the second section of Attachment A, it is only necessary to use 5%, as 5% of a Segment (minimum of 60) is always 3 or more.
Response: Thank you for your comments. 1. The SDT believes the Applicability as stated in PRC-005-2 is correct and supports the reliability of the BES. The SDT observes that the approved interpretation addresses the term, “transmission Protection System”, and notes that this term is not used within PRC-005-2; thus the interpretation does not apply to PRC-005-2. PRC-005-2 specifically addresses “Protection Systems that are installed for the purpose of detecting faults on BES Elements.” Please see Section 2.3 of the Supplementary Reference and FAQ document for additional discussion. 2. In the documentation to support Requirement R1.2, an entity can list different technologies within a Component Type along with their respective monitoring attributes. The SDT sees no appreciable improvement in the standard with your proposed change and respectfully declines to modify the standard.		

Organization	Yes or No	Question 3 Comment
3. The SDT agrees with your observation but sees no appreciable improvement in the standard with your proposed change and respectfully declines to modify the standard.		
Alliant Energy		We appreciate the work done by the SDT and believe it is an excellent product.
Response: Thank you for your comments.		
Georgia Transmission Corporation		We cast our ballot as an affirmative vote and agree with the nature of the standard. We raise concerns on the measures that are very prescriptive on documentation. We prefer a standard based on the program and measures that track the application and performance of the groups program. Maintaining the documentation for individual elements becomes a group's prime directive along with maintaining the equipment; this develops a process more controlled by documentation than results. This also adds a level of complexity for data retention, the drafting team tried to resolve by reducing the load of data. We contend the retention levels to be extreme considering some of the 12 calendar year cycles, interpret the data for compliance to be 24 years. One cannot remove previous documents until new maintenance performed 12 years after the current recorded date. We recommend reducing the data retention to list or check sheets and not the extreme of each individual component. Another important factor in managing the data is the capability of retrieval after 12 or 24 years. Some systems and formats are not available for 12 or 24 years and add a burden on companies to maintain legacy systems or convert massive amounts of data.
Response: Thank you for your comments. To be assured of compliance, the SDT believes the Compliance Monitor will need the data for the most recent performance of the maintenance, as well as the data for the preceding maintenance period. This seems to be consistent with what auditors are expecting (per the SDT's experience), and is also consistent with Compliance Process Bulletins 2011-001 and 2009-05. This seems to be consistent with what auditors are expecting (per the SDT's experience), and is also consistent with Compliance Process Bulletins 2011-001 and 2009-05. The SDT has specified the data retention in the posted standard to establish this level of documentation. The entity is urged to assure that data is retained as specified within the standard.		
Nebraska Public Power District		1. We recommend removing requirement 5. This is adding the requirement for a

Organization	Yes or No	Question 3 Comment
		corrective action program to the standard. Performance metrics should be utilized to measure if a registered entity is correcting maintenance deficiencies in a timely manner. Examples of performance metrics include: o A Countable event has already been defined in the definition of terms, which would cover the need to replace equipment. o The quantity and causes of Misoperations are a direct correlation to good or poor maintenance practices and corrective actions by a utility. o TADS records events which are initiated by failed protection system equipment and would identify utilities with poor corrective action processes. 2. Can you show us a study or references justifying why records need to be kept for longer than the end of the current audit period. We are concerned that the complexities and costs of tracking and maintaining records, along with the corresponding maintenance program and PRC-005 revision that old tests would fall under will be an undue cost to small utilities. We suggest requiring entities to retain the last maintenance record or any records created during the current audit period. 3. The comment from the previous consideration of comments, "The SDT believes that Protection Systems that trip (or can trip) the BES should be included" seems to include any device that can affect the BES. This sets a precedence to include any device that can trigger trip coils into the maintenance system. These devices are meant to protect equipment and not the BES. 4. Based on the IEEE device numbers, please indicate which devices are part of the BES protection system and should be included in a maintenance program. 5. Why do functional trip checks need to be done on any interval if checks are done upon commissioning, maintenance and modification? We suggest eliminating any interval and making the requirement to check upon commissioning, maintenance and modification. 6. Comments on SAR for 2007-17 Very few reclosing relays protect the BES. Most reclosing relays actually would have a negative impact on the reliability of the bulk electric system. It is imperative that the SDT clearly define what types of reclosing relays are referred to here, and if it pertains to ANY reclosing relay that

Organization	Yes or No	Question 3 Comment
		can affect the BES. 7. There is a difference between components designed to protect the BES and components which can affect the BES. 8. For R5 if the maintenance interval is 6 years does the maintenance issue become an "unresolved" item immediately or does the next maintenance interval 6 years later need to be reached before it takes on an unresolved status to be auditable under R5? 9. Comments: Suggest for monitored microprocessor relays in Table 1-1 and 3 to change wording to verify "settings are as specified that are essential to the proper functioning of the protection system". Many settings are not essential. 10. A key concern is will the reliability of the bulk electric system be affected negatively due to increased risk from human element initiated events as a result of the more frequent functional trip checks that will be required. I suggest there be consideration that the interval for functional tests be moved to the minimum frequency of 12 years to minimize this unknown but present risk.

Response: Thank you for your comments.

1. The SDT disagrees:
   NERC has demonstrated its belief that returning Protection System devices to good working order exists currently as a required element of a sound maintenance program subject to the existing Protection System maintenance and testing standard, PRC-005-1. For reference, NERC Compliance Application Notice CAN-0043 (Posted Final 12/30/2011) directs Compliance Enforcement Authorities (CEAs) to "…look for relay test results or field records with annotations such as "as-found" readings or pass/fail results; if failed, then adjustments made. The maintenance record for adjustments may be requested".
   Management of completion of the identified unresolved maintenance issue is a complex topic that falls outside of the scope of this standard. There can be any number of supply, process and management problems that make setting repair deadlines impossible. The SDT specifically chose the phrase "demonstrate efforts to correct" (with guidance from NERC Staff) because of the concern that many more complex unresolved maintenance issues might require greater than the remaining maintenance interval to resolve (and yet still be a "closed-end process"). For example, a problem might be identified on a VRLA battery during a 6 month check. In instances such as one that requires battery replacement as part of the long term resolution, it is highly unlikely that the battery could be replaced in time to meet the 6 calendar month requirement for this maintenance activity. The SDT does believe corrective actions should be timely but concludes it would be impossible to postulate all possible

Organization	Yes or No	Question 3 Comment
		remediation projects and therefore impossible to specify bounding time frames for resolution of all possible unresolved maintenance issues, or what documentation might be sufficient to provide proof that effective corrective actions are being undertaken. 2. To be assured of compliance, the SDT believes the Compliance Monitor will need the data for the most recent performance of the maintenance, as well as the data for the preceding maintenance period. This seems to be consistent with what auditors are expecting (per the SDT's experience), and is also consistent with Compliance Process Bulletins 2011-001 and 2009-05. This seems to be consistent with what auditors are expecting (per the SDT's experience), and is also consistent with Compliance Process Bulletins 2011-001 and 2009-05. The SDT has specified the data retention in the posted standard to establish this level of documentation. The entity is urged to assure that data is retained as specified within the standard. 3. The response cited from a previous consideration of comments was specifically related to sudden pressure relays. The Applicability 4.2.1 of the standard, specifically states, "…installed for the purpose of detecting Faults on BES Elements". 4. It is left to the entity to determine which devices and their complementary IEEE device numbers are installed for the purpose of detecting Faults on BES Elements. 5. The standard does not specify "functional trip tests", but instead requires that various elements of the dc control circuit be verified at various intervals. Also, FERC Order 693 directs NERC to establish maximum allowable maintenance intervals for Protection System components. Please see Section 15.3 of the Supplementary Reference and FAQ Document. 6. Reclosing relays are not covered in PRC-005-2. In Order 758, FERC directed NERC to include reclosing relays in a future version of PRC-005; the SDT developed the draft SAR to address FERC's directive 7. The SDT agrees; the standard explicitly covers "Protection Systems that are installed for the purpose of detecting Faults on BES elements (lines, buses, transformers, etc.)". 8. The item does not become an "Unresolved Maintenance Issue" unless it is not corrected before the current maintenance interval expires. 9. The SDT sees no appreciable improvement in the standard with your proposed change and respectfully declines to modify the standard. 10. The SDT believes that performing these maintenance activities at the specified intervals will benefit the reliability of the BES. The standard does not specify "functional trip tests", but instead requires that various elements of the dc control circuit be verified at various intervals.
Western Area Power Administration		Western Area Power Administration is appreciative of the hard work done by the SDT and NERC. 1. We respectfully submit our professional opinion that the increased relay testing

Organization	Yes or No	Question 3 Comment
		required by the PRC-005-2 will result in a net degradation to the reliability of the BES due to human hands disturbing working systems. 2. We propose that auxiliary relays be tested at commissioning and anytime the circuits are rewired or redesigned. If there is evidence that the relay has functioned properly in its current configuration then the best practice for insuring reliability is to leave it alone. 3. The maintenance interval of 6 years for lock-out relay testing is not consistent with 12 year interval of auxiliary relay testing or control circuit testing. No justification is provided for this increased testing interval of lock-out relays versus other electro-mechanical devices. These inconsistent testing intervals, within the same protection control schemes and protective devices, will complicate the industry's Protection System Maintenance Program and cause an increase in maintenance costs. 4. Condition Based Monitoring or Performance Based Monitoring are not allowed on trip coil circuits or lock-out relays. This is inconsistent with current or future technology. Deviation from the 6 year testing interval should be allowed, using CBM or PBM. The Standard should not present a barrier to technology advancements or industry initiatives. The continuous, frequent testing of these devices is detrimental to system reliability. 5. Disagree with testing of the dc control portion of the sudden pressure device as defined by the FAQ. We feel that this device and its wiring were deemed out of scope previously.
Response: Thank you for your comments. 1. The SDT believes that performing these maintenance activities at the specified intervals will benefit the reliability of the BES. 2. The SDT believes that performing these maintenance activities at the specified intervals will benefit the reliability of the BES. Also, FERC Order 693 directs NERC to establish maximum allowable maintenance intervals for Protection System components. 3. The SDT believes that electromechanical lockout relays need periodic operation to remain reliable. As such, these devices are required to be exercised at the same 6 year interval required for electromechanical relays. Performance based maintenance is an option if you want to extend the intervals beyond 6 years. 4. Performance-based maintenance per Attachment A of the standard may be applied to both trip coil circuits and lockout relays.		

Organization	Yes or No	Question 3 Comment
5. The trip path from a sudden pressure device is a part of the Protection System control circuitry. The sensing element is omitted from the definition of Protection System because the SDT is unaware of industry recognized testing protocol for the sensing elements. This position is consistent with the currently-approved PRC-005-1 and the SAR for Project 2007-17.		
Southwest Power Pool NERC Reliability Standards Development Team		N/A
Idaho Power Company		No additional comments.
Kansas City Power & Light		No other comments.

END OF REPORT

Consideration of Comments

Project 2007-17 Protection System Maintenance and Testing

The Protection System Maintenance and Testing Drafting Team would like to thank all commenters who submitted comments on the 4th draft of the standard for Protection System Maintenance. These standards were posted for a 30-day public comment period from July 27, 2012 through August 27, 2012. Stakeholders were asked to provide feedback on the standards and associated documents through a special electronic comment form. There were 36 sets of comments, including comments from approximately 102 different people and from approximately 65 companies representing 9 of the 10 Industry Segments as shown in the table on the following pages.

All comments submitted may be reviewed in their original format on the standard's project page.

If you feel that your comment has been overlooked, please let us know immediately. Our goal is to give every comment serious consideration in this process! If you feel there has been an error or omission, you can contact the Vice President and Director of Standards, Mark Lauby, at 404-446-2560 or at mark.lauby@nerc.net. In addition, there is a NERC Reliability Standards Appeals Process.[1]

Summary Consideration of all Comments Received:

The only edit to the standard was to add an "s" to "communication" in several locations within Table 1-2 for consistency. The term is now "communications system" throughout the table.

Definitions: No changes made.

Applicability: No changes made.

Requirements: No changes made.

Tables: In Table 1-2, added an "s" to "communication" in several locations for consistency. The term is now "communications system" throughout the table.

Measures: No changes made.

VSLs: In the VSLs for Requirement R5, the word "identify" was added to each VSL to be consistent with the requirement.

Supplementary Reference and FAQ Document: Various spelling and punctuation errors were corrected, and additional content was added to improve the reference document.

Implementation Plan: No changes made.

[1] The appeals process is in the Standard Processes Manual: http://www.nerc.com/files/Appendix_3A_StandardsProcessesManual_20120131.pdf

Unresolved Minority Views:

- A few commenters questioned the inclusion of breaker trip coil verification, auxiliary relay verification, and/or lockout relay verification. The drafting team responded that each of these devices needs to be maintained at the prescribed intervals to assure reliability.
- Several commenters were concerned that an entity has to be "perfect" in order to be compliant; the SDT responded that NERC Standards currently allow no provision for any degree of non-performance relative to the requirements.
- Several commenters continued to object to inclusion of UFLS and UVLS relays, in that they may not be installed on BES equipment. The drafting team responded that these devices, while not on BES equipment, are installed for the reliability of the BES, and are therefore included. The drafting team further noted that these devices are currently addressed in PRC-008-0 and PRC-011-0.
- A few commenters questioned the inclusion of the dc control circuitry for sudden pressure relays even though the relays themselves are excluded from the definition of "Protection System"; the SDT reiterated its position that this dc control circuitry is included because the dc control circuitry is associated with protective functions.
- Several commenters expressed concerns regarding Requirement R5 and Unresolved Maintenance Issues. The SDT explained its rationale for the requirement as drafted.

Index to Questions, Comments, and Responses

1. In response to stakeholder input, the SDT made several changes to Table 1-2 of the standard, as detailed below: 12
2. The SDT modified the Implementation Plan as follows: 16
3. The SDT made complementary changes in the "Supplementary Reference and FAQ Document" to provide supporting discussion for the Requirements within the standard. Do you have any specific suggestions for further improvements? 21
4. If you have any other comments that you have NOT provided in response to the above questions, please provide them here. (Please do not repeat comments that you provided elsewhere.) 28

The Industry Segments are:

1 — Transmission Owners
2 — RTOs, ISOs
3 — Load-serving Entities
4 — Transmission-dependent Utilities
5 — Electric Generators
6 — Electricity Brokers, Aggregators, and Marketers
7 — Large Electricity End Users
8 — Small Electricity End Users
9 — Federal, State, Provincial Regulatory or other Government Entities
10 — Regional Reliability Organizations, Regional Entities

Group/Individual		Commenter	Organization	Registered Ballot Body Segment									
				1	2	3	4	5	6	7	8	9	10
1.	Group	Guy Zito	Northeast Power Coordinating Council										X

	Additional Member	Additional Organization	Region	Segment Selection
1.	Alan Adamson	New York State Reliability Council, LLC	NPCC	10
2.	Carmen Agavriloai	Independent Electricity System Operator	NPCC	2
3.	Greg Campoli	New York Independent System Operator	NPCC	2
4.	Sylvain Clermont	Hydro-Quebec TransEnergie	NPCC	1
5.	Chris de Graffenried	Consolidated Edison Co. of New York, Inc.	NPCC	1
6.	Gerry Dunbar	Northeast Power Coordinating Council	NPCC	10
7.	Mike Garton	Dominion Resources Services, Inc.	NPCC	5
8.	Kathleen Goodman	ISO - New England	NPCC	2
9.	Michael Jones	National Grid	NPCC	1
10.	David Kiguel	Hydro One Networks Inc.	NPCC	1

Group/Individual	Commenter	Organization	Registered Ballot Body Segment									
			1	2	3	4	5	6	7	8	9	10
11. Michael R. Lombardi	Northeast Utilities	NPCC 1										
12. Randy MacDonald	New Brunswick Power Transmission	NPCC 9										
13. Bruce Metruck	New York Power Authority	NPCC 6										
14. Silvia Parada Mitchell	NextEra Energy, LLC	NPCC 5										
15. Lee Pedowicz	Northeast Power Coordinating Council	NPCC 10										
16. Robert Pellegrini	The United Illuminating Company	NPCC 1										
17. Si-Truc Phan	Hydro-Quebec TransEnergie	NPCC 1										
18. David Ramkalawan	Ontario Power Generation, Inc.	NPCC 5										
19. Brian Robinson	Utility Services	NPCC 8										
20. Michael Schiavone	National Grid	NPCC 1										
21. Wayne Sipperly	New York Power Authority	NPCC 5										
22. Donald Weaver	New Brunswick System Operator	NPCC 2										
23. Ben Wu	Orange and Rockland Utilities	NPCC 1										
24. Peter Yost	Consolidated Edison Co. of New York, Inc.	NPCC 3										
2. Group	Jonathan Hayes	Southwest Power Pool Reliability Standards Development Team		X								

	Additional Member	Additional Organization	Region	Segment Selection
1.	Jonathan Hayes	Southwest Power Pool	SPP	NA
2.	Robert Rhodes	Southwest Power Pool	SPP	NA
3.	John Allen	City Utilities of Springfield	SPP	1, 4
4.	Clem Cassmeyer	Western Farmers Electric Cooperative	SPP	1, 3, 5
5.	Terri Pyle	Oklahoma Gas and Electric	SPP	1, 3, 5
6.	Sandra Sanscrainte	ITC holdings	SPP	NA
7.	Katie Shea	Westar Energy	SPP	1, 3, 5, 6
8.	Tim Bobb	Westar Energy	SPP	1, 3, 5, 6

3. Group	Greg Rowland	Duke Energy	X		X		X	X				

	Additional Member	Additional Organization	Region	Segment Selection
1.	Doug Hils	Duke Energy	RFC	1
2.	Lee Schuster	Duke Energy	FRCC	3
3.	Dale Goodwine	Duke Energy	SERC	5
4.	Greg Cecil	Duke Energy	SERC	6

Group/Individual		Commenter	Organization	Registered Ballot Body Segment									
				1	2	3	4	5	6	7	8	9	10
4.	Group	Connie Lowe	Dominion	X		X		X	X				

	Additional Member	Additional Organization	Region	Segment Selection
1.	Mike Garton		NPCC	5, 6
2.	Louis Slade		RFC	5, 6
3.	Randi Heise		SERC	5, 6
4.	Mike Crowley		SERC	1, 3

5.	Group	Frank Gaffney	Florida Municipal Power Agency	X		X	X	X	X				

	Additional Member	Additional Organization	Region	Segment Selection
1.	Timothy Beyrle	City of New Smyrna Beach	FRCC	4
2.	Greg Woessner	Kissimmee Utility Authority	FRCC	3
3.	Jim Howard	Lakeland Electric	FRCC	3
4.	Lynne Mila	City of Clewiston	FRCC	3
5.	Joe Stonecipher	Beaches Energy Services	FRCC	1
6.	Cairo Vanegas	Fort Pierce Utility Authority	FRCC	4
7.	Randy Hahn	Ocala Utility Services	FRCC	3

6.	Group	Brenda Hampton	Luminant						X				

	Additional Member	Additional Organization	Region	Segment Selection
1.	Mike Laney	Luminant Generation Company LLC	ERCOT	5

7.	Group	Jason Marshall	ACES Standards Collaborators						X				

	Additional Member	Additional Organization	Region	Segment Selection
1.	Shari Heino	Brazos Electric Power Cooperative	ERCOT	1, 5
2.	Scott Brame	North Carolina Electric Membership Corporation	RFC	1, 3, 4, 5
3.	Clem Cassmeyer	Western Farmers Electric Cooperative	SPP	1, 5
4.	Megan Wagner	Sunflower Electric Power Corporation	SPP	1
5.	Ashley Gonyer	East Kentucky Power Cooperative	SERC	1, 3, 5

8.	Group	Dennis Chastain	Tennessee Valley Authority	X		X		X	X				

	Additional Member	Additional Organization	Region	Segment Selection
1.	Rusty Hardison		SERC	1
2.	Pat Caldwell		SERC	1
3.	David Thompson		SERC	5

Group/Individual		Commenter	Organization	Registered Ballot Body Segment									
				1	2	3	4	5	6	7	8	9	10
4. Jerry Finley			SERC 1										
5. Robert Brown			SERC 5										
6. Tom Vandervort			SERC 5										
7. Annette Dudley			SERC 5										
9.	Group	Chris Higgins	Bonneville Power Administration	X		X		X	X				
	Additional Member	Additional Organization	Region Segment Selection										
1. Jason		Burt	WECC 1										
2. Heather		Laslo	WECC 1										
3. Fred		Bryant	WECC 1										
4. Rita		Coppernoll	WECC 1										
5. Mason		Bibles	WECC 1										
6. Brenda		Vasbinder	WECC 1										
10.	Individual	Joe Uchiyama	O&M Group						X			X	
11.	Individual	Antonio Grayson	Southern Company	X		X		X	X				
12.	Individual	Brandy A. Dunn	Western Area Power Administration	X					X				
13.	Individual	Cole Brodine	Nebraska Public Power District	X		X		X					
14.	Individual	Tom Finch	CYPL			X							
15.	Individual	Eric Scott	City of Palo Alto			X							
16.	Individual	Cleyton Tewksbury	Bridgeport Energy					X					
17.	Individual	Joe O'Brien	NIPSCO	X		X		X	X				
18.	Individual	Thad Ness	American Electric Power	X		X		X	X				
19.	Individual	J. S. Stonecipher, PE	Beaches Energy Services	X								X	
20.	Individual	Chris McVicker	Puget Sound Energy	X				X					
21.	Individual	Nazra Gladu	Manitoba Hydro	X		X		X	X				
22.	Individual	Keith Morisette	Tacoma Power	X		X	X	X	X				
23.	Individual	Steven Wallace	Seminole Electric Cooperative, Inc.			X	X	X	X				
24.	Individual	Kirit Shah	Ameren	X		X		X	X				
25.	Individual	Scott Bos	Muscatine Power and Water	X		X		X	X				

Group/Individual		Commenter	Organization	Registered Ballot Body Segment									
				1	2	3	4	5	6	7	8	9	10
26.	Individual	Michelle R D'Antuono	Ingelside Cogeneration LP										
27.	Individual	Andrew Z. Pusztai	American Transmission Company	X									
28.	Individual	Anthony Jablonski	ReliabitliyFirst										X
29.	Individual	Yves Lavoie	Primax Technologies Inc.										
30.	Individual	Bob Thomas	Illinois Municipal Electric Agency				X						
31.	Individual	Eric Salsbury	Consumers Energy			X	X	X					
32.	Individual	Jonathan Meyer	Idaho Power Company	X		X							
33.	Individual	Brad Harris	CenterPoint Energy	X									
34.	Individual	Brett Holland	KCP&L/ KCPL-GMO	X		X		X	X				
35.	Individual	Edward Amato	Midtronics Inc										
36.	Individual	Chris Searles	IEEE Stationary Battery Committee Task Force										

If you support the comments submitted by another entity and would like to indicate you agree with their comments, please select "agree" below and enter the entity's name in the comment section (please provide the name of the organization, trade association, group, or committee, rather than the name of the individual submitter).

It is not necessary to answer the remainder of the questions unless you have additional comments that have not already been provided by the entity whose comments you are supporting. Each entity that indicates support for another entity's comments will be counted as having provided comments, regardless of whether they provide any additional comments.

Summary Consideration:

Organization	Agree	Support Comments Submitted by Another Entity
Northeast Power Coordinating Council		
Southwest Power Pool Reliability Standards Development Team		
Duke Energy		
Dominion		
Florida Municipal Power Agency		
Luminant		
ACES Standards Collaborators		
Tennessee Valley Authority		

Organization	Agree	Support Comments Submitted by Another Entity
Bonneville Power Administration		
O&M Group		
Southern Company		
Western Area Power Administration		
Nebraska Public Power District		
CYPL		City of Palo Alto Utilities
City of Palo Alto		
Bridgeport Energy		
NIPSCO		
American Electric Power		
Beaches Energy Services		
Puget Sound Energy		
Manitoba Hydro		
Tacoma Power		
Seminole Electric Cooperative, Inc.		Florida Municipal Power Agency and the Illinois Municipal Power Agency, Duke Energy and WAPA

Organization	Agree	Support Comments Submitted by Another Entity
Ameren		
Muscatine Power and Water		MIdwest Reliability Organization NERC Standards Review Forum (MRO NSRF)
Ingelside Cogeneration LP		
American Transmission Company		
ReliabitliyFirst		
Primax Technologies Inc.		
Illinois Municipal Electric Agency		
Consumers Energy		
Idaho Power Company		
CenterPoint Energy		
KCP&L/ KCPL-GMO		
Midtronics Inc		

1. **In response to stakeholder input, the SDT made several changes to Table 1-2 of the standard, as detailed below:**
   - **The interval for the second portion of the first row of the table was changed from 12 years to 6 years.**
   - **The term "channels" was modified to "communications system" in two locations.**
   - **The Component Attributes in the last row were modified to clarify that all attributes must be present to use the associated intervals and activities.**

Do you agree with these changes? If not, please provide specific suggestions for changes to Table 1-2 in the comment area.

Summary Consideration: In general, the industry was supportive of the changes to the table. More clarification on the scope of the "communications systems" was provided in Section 15.5.1 of the Supplementary Reference and FAQ document, and the term, "communication system" was corrected to "communications system."

Organization	Yes or No	Question 1 Comment
Bonneville Power Administration	No	BPA believes that changing the language from "channels" to "communications systems" does not clarify the intent since "communications systems" is not defined in the standard. The term "communications systems" which is referenced in the Supplementary Reference and FAQ document remains ambiguous. BPA recommends one of these two definitions be included in the standard:1) If the intent is to cover only the Communications Equipment and "channel" as defined above:"Communications System" - The Communications System as defined for the purposes of PRC-005-02 consists of a Component's signaling inputs and outputs and the communications channel that these signals traverse. The intervening carrier communications devices that transport this channel are explicitly excluded from the definition of Communications System.2) If the intent is to cover the Communications Equipment, "channel" and the cloud functionally:"Communications System" - The Communications System as defined for the purposes of PRC-005-02 consists of a Component's

Organization	Yes or No	Question 1 Comment
		signaling inputs and outputs and the communications channel that these signals traverse. The Communications System includes the simple end-to-end functionality of the intervening carrier communications devices that transport this channel but explicitly excludes intermediate switching, redundant paths, packet routing, digital cross-connections and other "cloud" carrier elements from the definition of Communications System.
Response: Thank you for your comments. It is the drafting team's intent to require the entity to perform maintenance on the protective system communications part of the scheme to verify that it is performing as required. Both the communications equipment and the channel are part of that. If that channel is a third-party leased circuit, then the entity can only verify performance of the channel and not maintain any of its equipment. If the channel is a power line carrier and owned by the entity, the performance can be verified and the equipment can be maintained, if necessary. This standard is proscribed from describing "how" to perform an overall functional test of a communications system; it is left to the entity to determine what methods best address their program. **Also, Section 15.5.1 of the Supplementary Reference and FAQ document was revised to further discuss communications systems.**		
Southern Company	No	Suggestion - Change the interval back to 12 years instead of 6 years. The 12 year interval is reasonable considering that un-monitored communications systems will be functionally tested every 4 months
Response: Thank you for your comments. The drafting team respectfully disagrees. Although an entity functionally tests an unmonitored communications system every four months, there is no requirement to have the pertinent performance criteria verified as part of this functional test. Testing the communications system's performance criteria involves additional tests, such as those described in Section 15.5.1 of the Supplementary Reference and FAQ document. Of course, an entity can always perform both types of tests on a four-month interval, but at this time we see no reason to have the performance criteria verification at a four-month interval. An entity has the latitude to perform maintenance more frequently than specified, if it feels that such maintenance is needed.		
Tacoma Power	Yes	In Table 1-2, for unmonitored communications systems, under Maintenance Activities, 'communication system' is used, but in the next row,

Organization	Yes or No	Question 1 Comment
		'communications system' is used. These terms should be consistent.
Response: Thank you for your comment. The drafting team has revised the Table 1-2 to consistently use "communications systems."		
Ameren	Yes	Ameren supports these changes in the interest of BES reliability.
Response: Thank you for your support.		
Ingelside Cogeneration LP	Yes	Ingleside Cogeneration LP was prepared to support a six year maintenance interval - which was specified in all other drafts of PRC-005-2. We agree that the project team's modification is necessary to correct a mistake that crept into the last version.
Response: Thank you for your support.		
Northeast Power Coordinating Council	Yes	
Southwest Power Pool Reliability Standards Development Team	Yes	
Duke Energy	Yes	
Dominion	Yes	
Chris Searles	Yes	
Florida Municipal Power Agency	Yes	
Luminant	Yes	

Organization	Yes or No	Question 1 Comment
ACES Standards Collaborators	Yes	
Tennessee Valley Authority	Yes	
O&M Group	Yes	
Western Area Power Administration	Yes	
Nebraska Public Power District	Yes	
City of Palo Alto	Yes	
Bridgeport Energy	Yes	
American Electric Power	Yes	
Beaches Energy Services	Yes	
Puget Sound Energy	Yes	
American Transmission Company	Yes	
ReliabitliyFirst	Yes	
Idaho Power Company	Yes	
CenterPoint Energy	Yes	
KCP&L/ KCPL-GMO	Yes	
Midtronics Inc	Yes	

2. The SDT modified the Implementation Plan as follows:

- **Within "Retirement of Existing Standards," the legacy standards will be retired upon full implementation of PRC-005-2, rather than upon PRC-005-2 becoming effective.**
- **Within "General Considerations," each entity shall be responsible for maintaining each of their Protection System components according to their maintenance program already in place for the legacy standards (PRC-005-1b, PRC-008-0, PRC-011-0, and PRC-017-0) or according to their maintenance program for PRC-005-2, but not both.**

Do you agree with these changes? If not, please provide specific suggestions for changes to the Implementation Plan in the comment area.

Summary Consideration: The commenters largely supported the Implementation Plan, including the changes made at this revision. Several commenters questioned whether the added text within "General Considerations" is necessary, in that it essentially duplicates statements made elsewhere in the Implementation Plan; the drafting team believes that the additional emphasis is useful. No changes were made to the Implementation Plan in response to comments.

Organization	Yes or No	Question 2 Comment
Southern Company	No	The "General Consideration" sentence in question above is superfluous and therefore unnecessary. The instruction provided in the sentence is (repeated and) more clearly stated in the first sentence of the "Retirement of Existing Standards:" section.
Response: Thank you for your comment. The drafting team believes that the modification to the "General Considerations" section of the Implementation Plan adds clarity.		
Western Area Power Administration	No	The logistics of these statements are confusing and need further clarification as to intent and implementation.
Response: Thank you for your comment. The drafting team believes that the implementation plan is clear. The entity should follow the previous maintenance intervals for any specific components until that component is addressed by PRC-005-2. As the		

Organization	Yes or No	Question 2 Comment
transition is occurring, the entity should adjust its maintenance and testing schedule so that they are able to demonstrate that the required percentage of components meet the maintenance intervals given in the PRC-005-2 tables at each of the percent compliant milestones given in this Implementation Plan.		
Tennessee Valley Authority		The intent of this modification is not clear. It could be interpreted as allowing an entity, for any given Protection System component identified in Table 1-1 through Table 1-5, to choose to maintain those components under an existing maintenance program that is compliant with the legacy standards until PRC-005-2 completely retires PRC-005-1b, PRC-008-0, PRC-011-0 and PRC-017-0 (first calendar quarter one hundred fifty-six (156) months following regulatory approval of PRC-005-2). For example, if an entity elects to maintain unmonitored communications system components described in Table 1-2 using its program that is compliant with the legacy standards, when would it have to meet the intervals defined in Table 1-2? The use of "or" under "General Considerations" indicates that compliance with the legacy standards is acceptable until such time that all of the legacy standards are retired.
Response: Thank you for your comment. The drafting team believes that the Implementation Plan is clear. **The entity should follow the previous maintenance intervals for any specific components until that component is addressed by PRC-005-2. As the transition is occurring, the entity should adjust its maintenance and testing schedule so that they are able to demonstrate that the required percentage of components meet the maintenance intervals given in the PRC-005-2 tables at each of the percent compliant milestones given in this Implementation Plan.** **If an entity elects to maintain unmonitored communications system components described in Table 1-2 using its program that is compliant with the legacy standards, it would have to meet the intervals defined in Table 1-2 according to the Implementation Plan for Requirements R3 and R4.**		
ACES Standards Collaborators	Yes	We thank the drafting team for this consideration that will allow early compliance with the new version of the standard. This plan should avoid many of the transitional issues that have occurred with other new versions of standards.
Response: Thank you for your comment.		

Organization	Yes or No	Question 2 Comment
American Electric Power	Yes	We believe the text "Once an entity has designated PRC-005-2 as its maintenance program for specific Protection System components, they cannot revert to the original program for those components" does improve the clarity of the standard.
Response: Thank you for your comment.		
Ameren	Yes	Ameren supports this practical reality.
Response: Thank you for your comment.		
Ingleside Cogeneration LP	Yes	Ingleside Cogeneration LP sees the modifications to the implementation plan as a clarification-only. We had anticipated that auditors will look for evidence that a legacy program remains in place until a specifically-identified transition date. In fact, the project team should consider adding an allowance for entities to adopt PRC-005-2 immediately upon FERC's approval. This may mean in rare cases that maintenance activities and intervals managed in accordance with PRC-005-1b will drop out of the program; but if the industry and regulatory bodies agree that the new program is superior, there is no reliability purpose served by waiting. Furthermore, the maintenance activities will continue anyways - they will just not be subject to auditor review. Unfortunately, NERC Compliance has taken the opposite position for the implementation of the CIP version 4 "bright-line criteria" - which we believe is counter-productive to our shared commitment to reliability. Just as with PRC-005-2, a thorough evaluation showed that the elimination of ambiguity reduces risk to the greater system. It is disingenuous to require outdated standards to remain in place simply to avoid a possibility that a borderline facility remain on the regulatory books.
Response: Thank you for your comments. The drafting team suggests that, in the event that an entity fully implements PRC-005-2 for all components (i.e., has maintained everything according to PRC-005-2) upon regulatory approvals, the entity will have retired PRC-005-1b, PRC-008-0, PRC-011-0, and PRC-17-0 from their program at that time. However, the drafting team believes that the		

Organization	Yes or No	Question 2 Comment
phased Implementation Plan is necessary to avoid any gaps in applicability throughout the maintenance intervals currently in use. Further, to demonstrate continuing compliance, an entity will need evidence that they have been in full compliance with whichever version of the standard was in effect.		
Northeast Power Coordinating Council	Yes	
Southwest Power Pool Reliability Standards Development Team	Yes	
Duke Energy	Yes	
Dominion	Yes	
Chris Searles	Yes	
Florida Municipal Power Agency	Yes	
Luminant	Yes	
Bonneville Power Administration	Yes	
O&M Group	Yes	
Nebraska Public Power District	Yes	
City of Palo Alto	Yes	

Organization	Yes or No	Question 2 Comment
Bridgeport Energy	Yes	
Beaches Energy Services	Yes	
Puget Sound Energy	Yes	
Manitoba Hydro	Yes	
Tacoma Power	Yes	
American Transmission Company	Yes	
Illinois Municipal Electric Agency	Yes	
Idaho Power Company	Yes	
CenterPoint Energy	Yes	
KCP&L/ KCPL-GMO	Yes	
Midtronics Inc	Yes	

3. The SDT made complementary changes in the "Supplementary Reference and FAQ Document" to provide supporting discussion for the Requirements within the standard. Do you have any specific suggestions for further improvements?

Summary Consideration: Commenters offered several suggestions for improvements to the Supplementary Reference and FAQ Document. Punctuation, spelling and content changes have been made to the Supplementary Reference and FAQ Document in response to these suggestions.

Organization	Yes or No	Question 3 Comment
Northeast Power Coordinating Council	No	
Duke Energy	No	
Dominion	No	
Tennessee Valley Authority	No	
Bonneville Power Administration	No	
Nebraska Public Power District	No	
City of Palo Alto	No	
Bridgeport Energy	No	
Puget Sound Energy	No	
Ameren	No	
Ingelside Cogeneration LP	No	

Organization	Yes or No	Question 3 Comment
American Transmission Company	No	
Idaho Power Company	No	
CenterPoint Energy	No	
KCP&L/ KCPL-GMO	No	
Primax Technologies Inc.		In 15.4.1 Frequently Asked Questions, to the question: What did the PSMT SDT mean by "continuity" of the dc supply? One of the proposed methods for ensuring continuity is the following: Specific gravity tests can infer continuity because, without continuity, there could be no charging occurring; and if there is no charging, then specific gravity will go down below acceptable levels. Comment: I agree that the uncharged cell's specific gravity would drop but it would take weeks or months to show. Should power be needed from the battery during this period of time the battery would not be able to perform as it should. To me this an unacceptable risk
Response: Thank you for your comments. The drafting team agrees with you that some methods of detecting continuity are better than others, but the Supplementary Reference and FAQ Document is intended as a general aid to understanding the standard, and not as a strict recommendation of particular maintenance methods. An entity can always do more, or more frequent maintenance if they wish.		
Southwest Power Pool Reliability Standards Development Team	Yes	1. On page 70 of the document we noticed that the word "reakers" was used and would suggest this was intended to be "breakers". 2. Also on page 81 of the document under the section of "My VRLA batteries have multiple-cells within an individual battery jar (or unit); how am I expected to comply with the cell-to-cell ohmic measurement requirements on these units that I cannot get to?" We would suggest that the wording be changed on "in

Organization	Yes or No	Question 3 Comment
		accessible" to remove the space to give you "Inaccessible".
Response: Thank you for your comments. Punctuation, spelling and content changes have been made to the Supplementary Reference and FAQ Document.		
Chris Searles	Yes	1. In Section 7.1-Frequently Asked Questions, pg 24 - add "or" before "other measurements" inadvertently left out. 2. In Section 8.1.2.4 - 4th & 5th sentences. Consider changing the verbiage: "....The Protection System owner may want to follow the guidelines in the applicable IEEE recommended practices for battery maintenance and testing, especially if the battery in question is used for application requirements in addition to the strict protection and control demands covered under this standard." 3. In section 15.4.1 - (pg 74) "What is the State of Charge...." In the first paragraph on page 74, the first complete sentence, I think the intent is to say "For these two types of batteries, and also for VRLA batteries," . . .
Response: Thank you for your comments. Punctuation, spelling and content changes have been made to the Supplementary Reference and FAQ Document.		
ACES Standards Collaborators	Yes	We suggest that the document should clarify Table 1-4(f). We understand from conversations with drafting team members that not all component attributes have to be met for the exclusion to apply. Rather each component attribute only has to be met individually for the exclusion to apply. We appreciate the drafting team including the localized definitions in the supplementary reference document. However, we believe there is still confusion with the use of component. Component is capitalized within the definition but it is not capitalized throughout the document. We believe the term should be capitalized throughout the document to be clear the localized definition applies. Capitalization of most instances of "system" has been correctly removed since the NERC definition was not consistent with the use. However, there are a few instances where it was removed and should not have been. One example occurs in the second paragraph on page 5 in the red-line document

Organization	Yes or No	Question 3 Comment
		where "system collapse" should be "System Collapse". In the third paragraph on page 5 in the red-line document, "transmission" should be capitalized since the NERC definition would be applicable.
Response: Thank you for your comments. Punctuation, spelling and content changes including your suggestions for capitalization have been made to the Supplementary Reference and FAQ Document. Based on your comment regarding Table 1-4(f), an additional FAQ has been added to Section 15.4.1 of the Supplementary Reference and FAQ Document.		
O&M Group	Yes	(1) We do not agree with no maintenance on the battery monitoring system (2) Also, we do not agree with replacing a battery capacity test by evaluating cell/unit measurements indicative of battery performance against station battery baseline.
Response: Thank you for your comments. **1. Thank you for your comment concerning maintenance on the battery monitoring system. Based on comments concerning the battery Component Attributes in table 1-4(f) a new Frequently Asked Question was added to the Supplementary Reference and FAQ Document. As a part of that FAQ the drafting team gave rational why no maintenance on the battery monitoring system is required by stating "the basis of the exclusions granted in the table is that the monitoring devices must incorporate the monitoring capability of microprocessor based components which perform continuous self-monitoring. For failure of the microprocessor device used in dc supply monitoring, the self-checking routine in the microprocessor must generate an alarm which will be reported within 24 hours of device failure to a location where corrective action can be initiated."** **2. Thank you for your comment concerning battery capacity testing. The drafting team agrees that a performance or modified performance capacity test is the only industry recognized method for determining the actual capacity of a battery. However, the maintenance activity required in the tables of PRC-005-2 is to "Verify that the station battery can perform as manufactured" not to determine the capacity of the battery. For many of the lead acid batteries used in BES Protection Systems, the drafting team believes that evaluating cell/unit measurements indicative of battery performance against a station battery baseline is as a valid method of verifying "that the station battery can perform as manufactured." That is why in Tables 1-4(a) and Tables 1-4(b) owners are allowed to do either of the two listed maintenance activities in their appropriate maximum maintenance intervals to "Verify that the station battery can perform as manufactured."**		

Organization	Yes or No	Question 3 Comment
Western Area Power Administration	Yes	Yes. The standard itself should be more clearly written so that a 100+ page Supplementary Reference and FAQ Document is not needed. This document is also not enforceable, nor is it a standard, so verbiage which interprets the standard and forces requirements should be removed.
Response: Thank you for your comments. This document provides supporting discussion, but is not part of the standard. The drafting team intends that it be posted as a reference document, as expressed in Section F of the standard. The standard is to be a terse statement of requirements, etc., and is not to include explanatory information like that included in the Supplementary Reference and FAQ Document.		
American Electric Power	Yes	On page 82, the text “in accessible” should be correct as “inaccessible”.
Response: Thank you for your comments. Punctuation, spelling and content changes have been made to the Supplementary Reference and FAQ Document.		
Manitoba Hydro	Yes	1. Table of Contents - The drawing should be removed from the Table of Contents. 2. Introduction and Summary: [Page 1] - Should include “Canada”. The sentence should read “The standards are mandatory and enforceable in the United States and Canada”. 3. Protection Systems Product Generations: [page 8] - We suggest changing "control Systems" to "control systems".[Page 28]: “Voltage & Current Sensing Device ...” should be “Voltage and current sensing device ...”[Page 29] "Control Circuit" should not be capitalized.[Page 44] A space is missing: “performance formal-performing segments” should be “performance for mal-performing segments”.[Page 45] "Other problems ..." ascribed to batteries may also apply to other Protection System Components, and therefore does not require special mention for batteries. This paragraph should be removed. 4. [Page 67]: Normally-open contacts of relays 94 & 86 should be treated the same as the current-carrying contacts if they are in use.
Response: Thank you for your comments. Punctuation, spelling and content changes have been made to the Supplementary		

Organization	Yes or No	Question 3 Comment
Reference and FAQ Document. Based on your comment, "Canada" was added to the introductory sentence on page 1 of the Supplementary Reference and FAQ Document. In the case of the normally-open contacts of the 94 and 86, entities may perform more maintenance than is listed within the standard.		
Tacoma Power	Yes	1. On page 88, third bullet, change "auxiliary communications equipment" to "associated communications equipment" for consistency. 2. In Figure A-1, what is meant by "Also verify wiring and test switches"? The emphasis of this question is on 'test switches'.
Response: Thank you for your comments. **1. Punctuation, spelling and content changes have been made to the Supplementary Reference and FAQ Document.** **2. The object of any test in any circuit that has test switches is the same as those tests in similar circuits without test switches. There is no specific mandated test in the standard for "Test Switches," but a test switch might well be a point of failure that one needs to be aware of when performing the mandated routine tests.**		
Illinois Municipal Electric Agency	Yes	Please see response to Question 4.
Response: Thank you for your comments.		
Midtronics Inc	Yes	The paragraphs below are from page 83 of the document (page 89 of the pdf). The first paragraph below contains the words, "risen above" and "over" a baseline. For conductance trending would be going below a baseline. Since this is a technical standard I think there should be a comment noting the difference in trending of conductance as compared to resistance and impedance like it is in the next paragraph. For VRLA batteries, there are two drivers for internal ohmic readings. The first driver is for a means to trend battery life. Trending against the baseline of VRLA cells in a battery string is essential to determine the approximate state of health of the battery. Ohmic measurement testing may be used as the mechanism for measuring

Organization	Yes or No	Question 3 Comment
		the battery cells. If all the cells in the string exhibit a consistent trend line and that trend line has not risen above a specific deviation (e.g. 30%) over baseline, then a judgment can be made that the battery is still in a reasonably good state of health and able to 'perform as manufactured.' It is essential that the specific deviation mentioned above is based on data (test or otherwise) that correlates the ohmic readings for a specific battery/tester combination to the health of the battery. This is the intent of the "perform as manufactured six-month test" at Row 4 on Table 1-4b. The second big driver is VRLA batteries tendency for thermal runaway. This is the intent of the "thermal runaway test" at Row 2 on Table 1-4b. In order to detect a cell in thermal runaway, you need not necessarily have a formal trending program. When a single cell/unit changes significantly or significantly varies from the other cells (e.g. a doubling of resistance/impedance or a 50% decrease in conductance), there is a high probability that the cell/unit/string needs to be replaced as soon as possible. In other words, if the battery is 10 years old and all the cells have approached a significant change in ohmic values over baseline, then you have a battery which is approaching end of life. You need to get ready to buy a new battery, but you do not have to worry about an impending catastrophic failure. On the other hand, if the battery is five years old and you have one cell that has a markedly different ohmic reading than all the other cells, then you need to be worried that this cell is in thermal runaway and catastrophic failure is imminent.
Response: Thank you for your comments. Punctuation, spelling and content changes have been made to the Supplementary Reference and FAQ Document. Based on your comment, the sentence was rewritten as follow: "If all the cells in the string exhibit a consistent trend line and that trend line has not risen above a specific deviation (e.g. 30%) over baseline for impedance tests or below baseline for conductance tests, then a judgment can be made that the battery is still in a reasonably good state of health and able to 'perform as manufactured.'"		
Luminant	Yes	
Southern Company	Yes	

4. If you have any other comments that you have NOT provided in response to the above questions, please provide them here. (Please do not repeat comments that you provided elsewhere.)

Summary Consideration: Other than as noted below, no changes were made to the standard in response to comments in Question 4.

Commenters continued to object to Applicability 4.2.1 in contrast to the interpretation in PRC-005-1b. The drafting team explained their position relative to this objection, and added discussion in Section 2.3.1 of the Supplementary Reference and FAQ Document to further explain their position.

Several commenters objected to various VSLs, particularly as it relates to the Lower VSL for Requirement R3. The drafting team explained that the VSLs are established in accordance with the VSL Guidelines. However, a minor editorial change was made to all levels of VSL for Requirement R5.

Several commenters continued to object to inclusion of UFLS and UVLS relays, in that they may not be installed on BES equipment. The drafting team responded that these devices, while not on BES equipment, are installed for the reliability of the BES, and are therefore included. The drafting team further noted that these devices are currently addressed in PRC-008-0 and PRC-011-0.

Several commenters questioned the inclusion of breaker trip coil verification, auxiliary relay verification, and/or lockout relay verification. The drafting team responded that each of these devices needs to be maintained at the prescribed intervals to assure reliability.

A few comments were offered on unresolved maintenance issues, various aspects of battery maintenance, communications system batteries, performance-based maintenance program criteria, and sudden pressure relay dc circuit testing. The drafting team provided responses to each of these comments, explaining the importance of the requirements within the standard.

Organization	Yes or No	Question 4 Comment
Consumers Energy		1. We agree with the purpose in section 3 of the Standard. However, section 4.2.1 expands the scope from "affecting the reliability of the Bulk Electric System" to "detecting Faults on BES Elements". In our opinion, the Applicability should be limited to the stated Purpose. Expanding the scope as is done in 4.2.1 greatly

Organization	Yes or No	Question 4 Comment
		increases the number of Protection Systems covered without an increase in reliability of the BES. We prefer the applicability as expressed in Appendix 1 of PRC-005-1b. 2. We suggest changing "Component Type" in R1.2 to something similar to "Segment" as defined within the Standard. A "Component Type" limits to one of five categories, whereas a "Segment" must share similar attributes.
Response: Thank you for your comments. **1. The drafting team believes the Applicability as stated in PRC-005-2 is correct and supports the reliability of the BES. The SDT observes that the approved interpretation addresses the term, "transmission Protection System," and notes that this term is not used within PRC-005-2; thus, the interpretation does not apply to PRC-005-2. PRC-005-2 specifically addresses: "Protection Systems that are installed for the purpose of detecting faults on BES Elements." The drafting team has added a discussion to Section 2.3.1 of the Supplementary Reference and FAQ Document explaining their intent regarding the Applicability.** **2. In the documentation to support Requirement R1.2, an entity can list different technologies within a Component Type along with their respective monitoring attributes. The drafting team sees no appreciable improvement in the standard with your proposed change, and respectfully declines to modify the standard.**		
Ameren		Ameren supports PRC-005-2 in the interest of BES reliability. We also appreciates the SDT's overall high quality product and looks forward to its implementation; however, we still assert that 1) the zero tolerance approach, in this case involving significantly large number (thousands) of devices, is an impractical requirement, 2) the VRF for R3 should be Medium, and 3) maintenance records for replaced equipment should not be retained. We' have raised these concerns and justified our position repeatedly but yet not convinced the SDT to change their position.
Response: Thank you for your comments. **1. The NERC VSL Guidelines do not allow some level of non-performance without being in violation.**		

Organization	Yes or No	Question 4 Comment
2. The drafting team believes that the assigned VRF is correct, in that that failure to implement and follow its PSMP could cause or contribute to Bulk Electric System instability, separation, or a Cascading sequence of failures. **3. The drafting team believes the Compliance Monitor will need the data for the most recent performance of the maintenance, as well as the data for the preceding maintenance period, to determine compliance. This seems to be consistent with what auditors are expecting (per the drafting team's experience), and is also consistent with Compliance Process Bulletins 2011-001 and 2009-05.**		
Florida Municipal Power Agency		1. Applicability does not align with previously approved interpretation of "transmission Protection System", Appendix 1 of the current V1 standard, that basically says that protection systems applicable to the standard are those that both "detect faults" and "trip" BES equipment. Applicability 4.2.1 says: "Protection Systems that are installed for the purpose of detecting Faults on BES Elements", which does not match "and" relationship of the interpretation. Eliminating this "and" relationship will cause distribution protection to be swept into the standards, such as reverse power relays designed to "detect" faults on the transmission system but "trip" distribution breakers. Distribution is expressly excluded in Section 215 and these types of relays have no impact on BES reliability. 2. Zero defect approach, should move to what CIP v5 is moving towards of internal controls rather than strict 100% compliance, or even better, a Total Quality Management approach. 3. UFLS and UVLS testing - broaches on distribution which is expressly excluded from Section 215 jurisdiction - when discussing control circuit testing, instrument transformer testing, etc.. We believe the requirement should be relay-only testing. We also believe that the incremental benefit is not worth the increased costs, e.g., one UFLS relay not operating has insignificant impact on a UFLS event; whereas one relay not operating to clear a fault has significant impact.
Response: Thank you for your comments. **1. The drafting team believes the Applicability as stated in PRC-005-2 is correct and supports the reliability of the BES. The**		

Organization	Yes or No	Question 4 Comment
		drafting team observes that the approved interpretation addresses the term, "transmission Protection System," and notes that this term is not used within PRC-005-2; thus, the interpretation does not apply to PRC-005-2. PRC-005-2 specifically addresses: "Protection Systems that are installed for the purpose of detecting faults on BES Elements." The drafting team has added a discussion to Section 2.3.1 of the Supplementary Reference and FAQ Document explaining their intent regarding the Applicability. **2. The NERC VSL guidelines do not allow some level of non-performance without being in violation.** **3. FPA Section 215(a) definitions section defines bulk-power system as: "(A) facilities and control systems necessary for operating an interconnected electric energy transmission network (or any portion thereof)." That definition then is limited by a later statement which adds the term bulk-power System: "… does not include facilities used in the local distribution of electric energy." Also, Section 215 also covers users, owners, and operators of bulk-power facilities.** **UFLS and UVLS (when the UVLS is installed to prevent system voltage collapse or voltage instability for BES reliability) are not "used in the local distribution of electric energy," despite their location on local distribution networks. Further, if UFLS/UVLS facilities were not covered by the Reliability Standards, then in order to protect the integrity of the BES during under-frequency or under-voltage events, that load would have to be shed at the transmission bus to ensure the load-generation balance and voltage stability is maintained on the BES.**
Beaches Energy Services		1. Applicability does not align with previously approved interpretation of "Transmission Protection System", Appendix 1 of the current V1 standard, that basically says that protection systems applicable to the standard are those that both "detect faults" and "trip" BES equipment. Applicability 4.2.1 says: "Protection Systems that are installed for the purpose of detecting Faults on BES Elements", which does not match "and" relationship of the interpretation. Eliminating this "and" relationship will cause distribution protection to be swept into the standards, such as reverse power relays designed to "detect" faults on the transmission system but "trip" distribution breakers. Distribution is expressly excluded in Section 215 and these types of relays have no impact on BES reliability. 2. Zero defect approach, should move to what CIP v5 is moving towards of internal controls rather than strict 100% compliance, or even better, a Total Quality

Organization	Yes or No	Question 4 Comment
		Management approach. 3. UFLS and UVLS testing - broaches on distribution which is expressly excluded from Section 215 jurisdiction - when discussing control circuit testing, instrument transformer testing, etc.. We believe the requirement should be relay-only testing. We also believe that the incremental benefit is not worth the increased costs, e.g., one UFLS relay not operating has insignificant impact on a UFLS event; whereas one relay not operating to clear a fault has significant impact.
Response: Thank you for your comments. **1. The drafting team believes the Applicability as stated in PRC-005-2 is correct and supports the reliability of the BES. The drafting team observes that the approved interpretation addresses the term, "transmission Protection System," and notes that this term is not used within PRC-005-2; thus, the interpretation does not apply to PRC-005-2. PRC-005-2 specifically addresses: "Protection Systems that are installed for the purpose of detecting faults on BES Elements." The drafting team has added a discussion to Section 2.3.1 of the Supplementary Reference and FAQ Document explaining their intent regarding the Applicability.** **2. The NERC VSL guidelines do not allow some level of non-performance without being in violation.** **3. FPA Section 215(a) definitions section defines bulk-power system as: "(A) facilities and control systems necessary for operating an interconnected electric energy transmission network (or any portion thereof)." That definition then is limited by a later statement which adds the term bulk-power system: "… does not include facilities used in the local distribution of electric energy." Also, Section 215 also covers users, owners, and operators of bulk-power facilities.** **UFLS and UVLS (when the UVLS is installed to prevent system voltage collapse or voltage instability for BES reliability) are not "used in the local distribution of electric energy," despite their location on local distribution networks. Further, if UFLS/UVLS facilities were not covered by the Reliability Standards, then in order to protect the integrity of the BES during under-frequency or under-voltage events, that load would have to be shed at the transmission bus to ensure the load-generation balance and voltage stability is maintained on the BES.**		
Illinois Municipal Electric Agency		As indicated in previous comments, Illinois Municipal Electric Agency (IMEA) appreciates SDT efforts, and supports the overall refinements in PRC-005-2. However, IMEA respectfully disagrees with the SDT's decision to not resolve the

Organization	Yes or No	Question 4 Comment
		inconsistency between 4.2.1 and the FERC-approved interpretation in PRC-005-1b. Whether the term "transmission Protection System" is used in PRC-005-2, as indicated in the SDT response to our comments, is not the point. The interpretation in PRC-005-1b provides clarity to smaller entities in particular regarding which protective devices need to be factored into compliance with PRC-005 (and other PRC standards). This inconsistency should have been more clearly vetted within the industry given the fact that this was a recently NERC- and FERC-approved Protection System interpretation which was being compromised by the proposed language in 4.2.1. Once again, we find ourselves aiming at a constantly moving compliance target. This issue has the potential to require more DPs to comply with PRC-005, and draw more small entities into registration, which of course would require increased resource expenditures associated with compliance. This issue does not appear to be consistent with NERC and FERC efforts to minimize the impact on smaller entities that have minimal or no potential to impact the BES. If the 4.2.1 language was carefully considered so as not to unnecessarily impact small entities, it would be appreciated that these provisions be more clearly addressed in the "Supplementary Reference and FAQ". Thank you for this opportunity to comment. This issue is significant enough that IMEA felt a Negative vote was unfortunately necessary on an otherwise significant improvement to PRC-005.
Response: Thank you for your comments. **The drafting team believes that the Applicability 4.2.1 as stated in PRC-005-2 is correct and supports the reliability of the BES. The drafting team believes all Protection Systems installed for the purpose of detecting faults on the BES need to be maintained per the requirements of PRC-005-2. The drafting team observes that the approved Interpretation addresses the term, "transmission Protection System," and notes that this term is not used within PRC-005-2; thus, the Interpretation does not apply to PRC-005-2. The drafting team has added a discussion to Section 2.3.1 of the Supplementary Reference and FAQ Document explaining their intent regarding the Applicability.**		
American Transmission Company		ATC recommends that the SDT change the text of "Standard PRC-005-2 - Protection System Maintenance" Table 1-5 on page 24, Row 1, Column 3 to:"Verify that a trip

Organization	Yes or No	Question 4 Comment
		coil is able to operate the circuit breaker, interrupting device, or mitigating device." Or alternately, "Electrically operate each interrupting device every 6 years". Basis for the change: Trip coils are designed to be energized no longer than the breaker opening time (3-5 cycles). They are robust devices that will successfully operate the breaker for 5,000-10,000 electrical operations. In addition, many utilities purchase breakers with dual redundant trip coils to mitigate the possibility of a failure. Interrupting devices with multiple trip coils operate the same mechanism. Therefore, by requiring testing of each trip coil in a redundant system you double the amount of times the system is out of its desired state without increasing the performance of the device. It is well recognized that the most likely source of trip coil failure is the breaker operating mechanism binding, thereby preventing the breaker auxiliary stack from opening and keeping the trip coil energized for too long of a time period. Therefore, trip coil failure is a function of the breaker mechanism failure. Exercising the breakers and circuit switchers is an excellent practice to mitigate the most prevalent cause of breaker failure. ATC would encourage language that would suggest this task be done every 2 years, not to exceed 3 years. Exercising the interrupting devices would help eliminate mechanism binding, reducing the chance that the trip coils are energized too long. The language, as currently written in Table 1-5 row 1, will also have the unintentional effect of changing an entities existing interrupting device maintenance interval (essentially driving interrupting device testing to a less than 6 year cycle).ATC continues to recommend a negative ballot since we believe that the testing of "each" trip coil will result in the increased amount of time the BES is in a less intact system configuration. ATC hopes that the SDT will consider these changes.
Response: Thank you for your comments. The definition of Protection System includes trip coils within the dc control circuitry component, and it is necessary to perform maintenance on all of these devices to assure proper performance. Performance-based maintenance is an option to increase the intervals if the performance of these devices supports those intervals.		
Bonneville Power		BPA appreciates that the Standards Development Team does not believe that communications batteries are included in PRC-005-2 standard. While BPA believes

Organization	Yes or No	Question 4 Comment
Administration		the SDT did not intend to include communications batteries in the standard, this intention is neither captured by the language of the standard nor explicit in the Supplementary Reference and FAQ document. Ambiguity on regulation of communications batteries provides no benefit and comprises a concrete regulatory risk to BPA during an audit. BPA strongly believes that the standard should articulate exactly what types and applications of batteries it means to regulate and which batteries it does not.
Response: Thank you for your comments. The drafting team believes this issue is addressed in the response to FAQ: "Does this standard refer to Station batteries or all batteries; for example, Communications Site Batteries?" in the Supplementary Reference and FAQ Document.		
CenterPoint Energy		CenterPoint Energy recommends that PRC-005-2 include a built-in tolerance and move away from a zero-defect enforcement model. Achieving one-hundred percent schedule and documentation compliance is negatively impacting resources on an industry-wide basis for the sake of the "last one percent" and is not needed to provide an adequate level of BES reliability. Entities should be allowed the opportunity to correct minor deficiencies discovered in the program via customary mitigation activities as part of an internal controls policy and good utility practice instead of via the enforcement channel. One possible avenue for incorporating such a tolerance into the Standard is to establish a threshold for the Lower VSL. For example, the Lower VSL for requirement R3 could state: "For Protection System Components included within a time-based maintenance program, the responsible entity failed to maintain more than 1% but 5% or less of the total Components included within a specific Protection System Component type in accordance with the minimum maintenance activities and maximum maintenance intervals prescribed within Tables 1-1 through 1-5, Table 2, and Table 3.".
Response: Thank you for your comments. The drafting team believes that the assigned VSLs are correct. The SDT believes that failure to implement and follow a PSMP could cause or contribute to Bulk Electric System instability, separation, or a Cascading		

Organization	Yes or No	Question 4 Comment
sequence of failures. Anything less than 100% should be a violation.		
NIPSCO		Comment: Test and maintenance data requirements need to be specific and not open to interpretation. Examples: 1. The number of data points required on an impedance circle graph for a relay calibration versus maximum torque angle only.2. Verification of inputs into microprocessor relay records to include magnitude or is a check box sufficient.
Response: Thank you for your comments. The drafting team believes it has struck the appropriate balance in affording some freedom in applying the standard by Transmission Owners, while minimizing the possibility of adverse auditing interpretations.		
Duke Energy		Duke Energy votes "Negative" because we strongly object to the wording in the Applicability section 4.2.1 which expands the reach of the standard to relaying schemes that detect faults on the BES but which are not intended to provide protection for the BES. Duke Energy's standard protection scheme for dispersed generation at retail stations would become subject to the standard due to the changes in section 4.2.1. These protection schemes are designed to detect faults on the BES, but do not operate BES elements nor do they interrupt network current flow from the BES. The new wording in section 4.2.1 would add significant O&M costs and resource constraints due to the inclusion of protection system devices at retail stations without increasing the reliability of the BES. FERC's September 26, 2011 Order in Docket No. RD11-5 approved NERC's interpretation of PRC-005-1 R1 and R2, stating: "The interpretation clarifies that the Requirements are "applicable to any Protection System that is installed for the purpose of detecting faults on transmission elements (lines, buses, transformers, etc.) identified as being included in the [BES] and trips an interrupting device that interrupts current supplied directly from the BES." This interpretation is consistent with the Commission's understanding that a "transmission Protection System" is installed for the purpose of detecting and isolating faults affecting the reliability of the bulk electric system through the use of current interrupting devices." Duke Energy proposes the following wording for Section 4.2.1: "Protection Systems that are installed for the purpose of protecting BES

Organization	Yes or No	Question 4 Comment
		Elements (lines, buses, transformers, etc.)”.
Response: Thank you for your comments. The drafting team still believes that the Applicability as stated in PRC-005-2 is correct, that it supports the reliability of the BES, and that all Protection Systems installed for the purpose of detecting faults on the BES need to be maintained per the requirements of PRC-005-2. The drafting team observes that the approved Interpretation addresses the term, “transmission Protection System,” and notes that this term is not used within PRC-005-2; thus, the Interpretation does not apply to PRC-005-2. Please see Section 2.3 of the Supplementary Reference and FAQ Document for additional discussion.		
Nebraska Public Power District		1. Keeping records after the end of the audit period does not increase the current reliability of the electric grid. Requiring records to be kept for longer time periods will increase the risk to utilities of making a mistake in their record keeping and receiving a fine due to the zero tolerance policy drafted in the standard. Records beyond the audit period, up to 24 years old, don’t have any effect on the reliability of the current bulk electric system. 2. A key concern is will the reliability of the bulk electric system be affected negatively due to increased risk from human element initiated events as a result of the more frequent functional trip checks that will be required. I suggest there be consideration that the interval for functional tests be moved to the minimum frequency of 12 years to minimize this unknown but present risk. 3. We recommend removing requirement 5. This is adding the requirement for a corrective action program to the standard. Performance metrics should be utilized to measure if a registered entity is correcting maintenance deficiencies in a timely manner. Examples of performance metrics include:-A Countable event has already been defined in the definition of terms, which would cover the need to replace equipment. -The quantity and causes of Misoperations are a direct correlation to good or poor maintenance practices and corrective actions by a utility. -TADS records events which are initiated by failed protection system equipment and would identify utilities with poor corrective action processes.

Organization	Yes or No	Question 4 Comment

Response: Thank you for your comments.

1. **In order that a Compliance Monitor can be assured of compliance, the drafting team believes that the Compliance Monitor will need the data of the most recent performance of the maintenance, as well as the data of the preceding one to validate that entities have been in compliance since the last audit (or currently, since the beginning of mandatory compliance). The drafting team has specified the data retention in the posted standard to establish this level of documentation. This seems to be consistent with what auditors are expecting (per the drafting team's experience), and is also consistent with Compliance Process Bulletins 2011-001 and 2009-05. The entity is urged to assure that data is retained as specified within the standard.**
2. **The drafting team believes that performing these maintenance activities at the specified intervals will benefit the reliability of the BES. The standard does not specify "functional trip tests," but instead requires that various elements of the dc control circuit be verified at various intervals.**
3. **The drafting team respectfully disagrees:**

   it's the drafting team believes that returning Protection System devices to good working order exists currently as a required element of a sound maintenance program subject to the existing Protection System maintenance and testing standard, PRC-005-1. For reference, NERC Compliance Application Notice CAN-0043 (Posted Final 12/30/2011) directs Compliance Enforcement Authorities (CEAs) to "…look for relay test results or field records with annotations such as "as-found" readings or pass/fail results; <u>if failed, then adjustments made. The maintenance record for adjustments may be requested"</u>.

   Management of completion of the identified unresolved maintenance issue is a complex topic that falls outside of the scope of this standard. There can be any number of supply, process and management problems that make setting repair deadlines impossible. The drafting team specifically chose the phrase: "… demonstrate efforts to correct" (with guidance from NERC Staff) because of the concern that many more complex unresolved maintenance issues might require greater than the remaining maintenance interval to resolve (and yet still be a "closed-end process"). For example, a problem might be identified on a VRLA battery during a six-month check. In instances such as one that requires battery replacement as part of the long term resolution, it is highly unlikely that the battery could be replaced in time to meet the six-calendar-month requirement for this maintenance activity. The drafting team does believe corrective actions should be timely, but concludes it would be impossible to postulate all possible remediation projects; and, therefore, impossible to specify bounding time frames for resolution of all possible unresolved maintenance issues or what documentation might be sufficient to provide proof that effective corrective action is being undertaken.

Organization	Yes or No	Question 4 Comment
Manitoba Hydro		1. Manitoba Hydro is maintaining our negative vote based on our previously submitted comments (see comments submitted in the comment period ending on March 28th, 2012. 2. Additionally, Standard PRC-005-2:R3: "minimum maintenance activities" is not specified in the Tables. We suggest removing the word "minimum". 3. R5: It is not clearly stated that the Unresolved Maintenance issues must be identified. As written, only "identified Unresolved Maintenance Issues" are applicable in R5. 4. Measure M1: “responsible entity(s)” is not defined in the standard. The format of examples is inconsistent with the other measures. We suggest replacing "... (such as ... drawings) ..." with "The evidence may include, but is not limited to, manufacturer's specifications or engineering drawings. ...". 5. Evidence Retention: There is no statement in either the requirements or the measures regarding a "dated" PSMP. 6. VSL: a. R3 - "minimum maintenance activities" is not specified in the Tables. We suggest removing the word "minimum". b. R5 - We suggest "identified Unresolved Maintenance Issues" to agree with the wording in R5. 7. Table 1.1: The Maintenance Activities statement "For all unmonitored relays:" is redundant since it is specified in the Component Attributes. 8. Table 3: Voltage and current sensing devices for UFLS or UVLS should be excluded from periodic maintenance if they are connected to microprocessors relays with AC measurements continuously verified with alarming, as provided for voltage and current sensing devices in Table 1-3. 9. The wording "Protection System dc supply for tripping non-BES interrupting devices used only for a UFLS or UVLS system" is unclear. It is unclear if "used only for a UFLS or UVLS system" applies to the "Protection System dc supply" or to the "non-BES interrupting devices". Exclusions in Table 1-4(f) which pertain to verifying dc supply voltage should also apply to the dc supply in Table 3.

Organization	Yes or No	Question 4 Comment
		10. Attachment A a. To maintain the technical justification Item 5: for consistency with Item 4 and the VSL, we suggest changing the wording to “If the Components in a Protection System Segment maintained through a performance-based PSMP experience more than 4% Countable Events, develop, document, and implement an action plan to reduce the Countable Events to no more than 4% of the Segment population within 3 years. b. "Technical Justification: "Other problems ..." [page 7] ascribed to batteries may also apply to other Components, and therefore does not require special mention for batteries. This paragraph should be removed. c. Pages 12 to 13 - The numbering should agree with the standard. d. Item 10 [page 13] - For consistency with the previous item and the VSL, we suggest changing the wording to "If the Components in a Protection System Segment maintained through a performance-based PSMP experience more than 4% Countable Events, develop, document, and implement an action plan to reduce the Countable Events to no more than 4% of the Segment population within 3 years." 11. The bullet “All of the relevant communication system tests still apply” was added in examples 1 and 2 on pages 68 and 69 of the Supplementary Reference and FAQ - Draft PRC0005-2 Protection System Maintenance (JULY 2012) document (SRFAQ). This makes reference to Table 3 (page 26) of the Standard, but Table 3 does not identify communication systems as a Component Attribute. Table 1-2 (Communications Systems) on page 14 of the standard also excludes the UFLS and UVLS equipment on Table 3. Section 15.7, page 91, of the SRFAQ document also states “No maintenance activity is required for associated communication systems for distributed UFLS and distributed UVLS schemes”. I believe that since no communications systems has been identified in Table 3, this bullet cannot be added to the examples identified above in the SRFAQ document. 12. Implementation Plan: Should entities be given a single compliance date for each of the maintenance intervals, and be allowed the flexibility to schedule and

Organization	Yes or No	Question 4 Comment
		complete their maintenance as required while transitioning to the defined time intervals in PRC-002-2. For example, if a maximum maintenance interval is 6 calendar years, should the implementation plan only require that "The entity shall be 100% compliant on the first day of the first calendar quarter 84 months following applicable regulatory approval, or in those jurisdictions where no regulatory approval is required, on the first day of the first calendar quarter 96 months following Board of Trustees adoption."? The existing standard PRC-005-1 already requires protection systems to be maintained as part of a program. Prescribing how an entity must reach full compliance may provide a negligible improvement in reliability, while significantly increasing the compliance burden. PRC-005-2 affects a large number of assets, and proving compliance for prescribed percentages of assets during the transition period may create unnecessary overhead with little added value.

Response: Thank you for your comments.

1. **The drafting team has not changed its position from that expressed in response to the earlier comments.**
2. **Requirement R3 establishes that the maintenance activities specified in the Table are minimum maintenance activities.**
3. **The drafting team believes it is implicit that Unresolved Maintenance issues must be identified.**
4. **The term, "responsible entities" is used throughout NERC standards, and pertains to the applicable entities specified in a particular requirement. The drafting team suggests that the evidence for Measure M1 is sufficiently variable that the term "may include but is not limited to" would not be appropriate.**
5. **The drafting team believes it is self-evident that compliance documents must be dated in order that the time period to which they apply is clear.**
6. **Requirement R3 establishes that the maintenance activities specified in the Table are minimum maintenance activities, and therefore apply to the related VSL. The drafting team has added "identified" to the Requirement R5 VSL table.**
7. **The drafting team believes that the word "unmonitored" is still required for clarity in Table 1-1.**
8. **The drafting team observes that the third row of Table 3 (protective relays) addresses your suggestion.**

Organization	Yes or No	Question 4 Comment
9. The drafting team believes that the wording in Table 3, third row of component attributes is clear and is applicable only to dc supplies used for distributed UFLS and distributed UVLS systems. **10. The drafting team does not believe that your suggested changes improve the standard and declines to make the changes.** **11. The drafting team has modified the Supplementary Reference and FAQ Document to remove the reference to the communication system in these two locations.** **12. The drafting team believes that implementation of the standard according to the milestones established within the Implementation Plan is necessary to establish an effective ongoing Protection System Maintenance Program and to demonstrate a commitment to implementing the new standard.**		
Dominion		Page 11 of the PRC-005-2 redline standard, Version History; Previous versions (i.e. 0, 1, 1a, 1b) need to be included here.
Response: Thank you for your comments. The Version History is intended to capture changes between the last-approved version of the standard and the new standard being proposed.		
ReliabilityFirst		ReliabilityFirst thanks the SDT for changing the maximum time for unmonitored systems within Table 1-2 back to six years. However, RFC continues to believe the language in Requirement R5 ("...shall demonstrate efforts to correct...") is subjective and will be hard to measure. RFC believes at a minimum, the applicable entity should be required to develop a Corrective Action Plan to address the Unresolved Maintenance Issue. Without the formality and burden of a full-fledged Corrective Action Plan, ReliabilityFirst is concerned the identified Unresolved Maintenance Issues may not get resolved or resolved in a timely manner. ReliabilityFirst offers the following modification for consideration: "Each Transmission Owner, Generator Owner, and Distribution Provider shall put in place a Corrective Action Plan to remedy all identified Unresolved Maintenance Issues."
Response: Thank you for your comments. As to demonstrating efforts to address Unresolved Maintenance Issues, the drafting team's intent is to furnish a way for an entity to address Unresolved Maintenance Issues without the formality and burden of a		

Organization	Yes or No	Question 4 Comment
full-fledged Corrective Action Plan.		
Puget Sound Energy		1. Sealed Battery Maintenance: The requirement of impedance testing the batteries every 6 months seems excessive based on our experience. We have been successfully maintaining our sealed cells with impedance testing at 36 months. 2. CT testing on Neutrals: The requirement to verify operation is not possible on the Neutral CT as they don't normally carry current. There should be a clarification that verification of readings can only occur (and is only required) on phase CT's and the neutral CT is excluded. 3. Dual Trip Coil Check: In our experience the requirement to verify operation of both trip coils through a trip is overly burdensome and does not improve the reliability of the system. Testing to verify operation of the output relays, proper tripping of the breaker, and verification of trip coil continuity is sufficient to verify the protective system will operate appropriately. 4. Breaker Failure Relay Testing: In our experience testing of the breaker failure relay up to the relay outputs is sufficient to ensure proper operation. The tripping of the breakers through the coils is maintained through the individual relay maintenance. Requiring clearing of the main bus during maintenance is not practical and may negatively impact the reliability of the Bulk Electric System.
Response: Thank you for your comments. **1. The drafting team believes that the six-month interval is proper for VRLA batteries.** **2. See discussion in Section 8.1.3 of the Supplementary Reference and FAQ Document.** **3. The definition of Protection System includes trip coils within the dc control circuitry component, and it is necessary to perform maintenance on all of these devices to assure proper performance. Performance-based maintenance is an option to increase the intervals if the performance of these devices supports those intervals.** **4. The standard does not require that the bus be cleared for breaker failure relay testing, but does require that the circuitry from the output of breaker failure relays be verified to the intended target (trip coil, lockout relay coil, input to another relay, etc). The use of test switches or trip cutout switches may be used to break the control circuit into manageable portions so the circuitry can be verified using overlapping zones without necessitating that all associated breakers be tripped for each**		

Organization	Yes or No	Question 4 Comment
maintenance activity.		
ACES Standards Collaborators		The drafting team has done an outstanding job refining the standard. Because no standard will ever be perfect, we believe industry and reliability would be best served to move the standard to recirculation ballot at this point. Regarding Requirement R1 VSLs, we continue to believe that missing three component types should not jump to a Severe VSL when missing two is a Moderate VSL. Missing three should be a High VSL.
Response: Thank you for your response. **The drafting team believes that missing three Protection System component types (out of five) meets the definition of a Severe VLS in the VSL Guidelines.**		
City of Palo Alto		These comments supercede the comments submitted earlier by Tom Finch by mistake. Attachment A "Criteria for a Performance-Based Protection System Maintenance Program" requires a minimum segment population of 60 Components in order to justify a PSMP. We feel the 60 component requirement is arbitrary and discriminates against small entities such as Palo Alto which do not have 60 components and may wish to implement a performance-based PSMP. We feel the decision on whether to use a time-based or performance-based PSMP should be made by the Entity and not NERC.
Response: Thank you for your comment. The minimum population of 60 components, as described in Section 9.1 of the Supplemental Reference and FAQ Document, is a statistically-significant sample size to meet the performance goals of the performance-based maintenance program. Section 9.2 of the Supplemental Reference and FAQ Document suggests that small entities may be able to pool their component populations with other small entities to establish a common performance-based maintenance program.		
Tennessee Valley Authority		TVA appreciates the work that the standard drafting team has done on PRC-005-2.

Organization	Yes or No	Question 4 Comment
		As stated in our comments on Draft 3, TVA is concerned with the maximum maintenance interval of 4 calendar months specified for unmonitored communications systems in Table 1-2, and for that reason has voted negative. A longer implementation timeframe is needed for replacement of the unmonitored units.
Response: Thank you for your comments. The drafting team suggests that performance-based maintenance is an option to increase the intervals if the performance of these devices supports those intervals. If an entity's experience is that these components require less-frequent maintenance, a performance-based program in accordance with Requirement R2 and Attachment A is an option.		
Southwest Power Pool Reliability Standards Development Team		We have a concern that the RE would have difficulty in implementation of the phased in approach. We would suggest extensive training for the auditors for this standard and others which have these multi phased approaches to implementation. With this training it would also be beneficial if NERC would hold a webinar to fill in the industry on the training provided to keep everyone on the same page. We would like to also suggest that NERC compliance staff work with the Drafting Team to develop the RSAWs for this standard.
Response: Thank you for your comments. The drafting team believes that implementation of the standard according to the milestones established within the Implementation Plan is necessary to establish an effective ongoing Protection System Maintenance Program and to demonstrate a commitment to implementing the new standard. The drafting team will pass your suggestion for auditor training and webinar on to NERC Compliance staff. The current NERC RSAW development process encourages that NERC staff involve drafting team representatives when developing RSAWs.		
Southern Company		We strongly suggest that the SDT modify the Applicability section to clarify that Sections 4.2.1 thru 4.2.4 apply to transmission and distribution facilities, and that Section 4.2.5 defines the generator owner applicability by making changes similar to these proposed below. Without this distinctive change, there exists an ability to mis-interpret Section 4.2.1 such that auditors may apply this standard to a generation scope wider than is specified in the NERC Statement of Registry Criteria (Rev 5). We

Organization	Yes or No	Question 4 Comment
		propose the following changes to 4.2.1 thru 4.2.4:1) Replace the existing 4.2.1 with "Protection Systems for transmission and distribution Facilities, including:"2) Move the existing 4.2.1 thru 4.2.4 to subparts of the new 4.2.1 as 4.2.1.1, 4.2.1.2, 4.2.1.3, 4.2.1.4.
Response: Thank you for your comments. **Protection Systems that are installed in non-BES facilities for the purpose of detecting faults on the BES are included in this standard. The drafting team intends that Applicability 4.2.1 address non- generator BES elements. The drafting team has added a discussion to Section 2.3.1 of the Supplementary Reference and FAQ Document explaining their intent regarding the Applicability.**		
Western Area Power Administration		Western feels that our comments and concerns as provided on the previous comment form were not adequately addressed. Those comments are repeated below: 1. Western Area Power Administration is appreciative of the hard work done by the SDT and NERC. We respectfully submit our professional opinion that the increased relay testing required by the PRC-005-2 will result in a net degradation to the reliability of the BES due to human hands disturbing working systems. We propose that auxiliary relays be tested at commissioning and anytime the circuits are rewired or redesigned. If there is evidence that the relay has functioned properly in its current configuration then the best practice for ensuring reliability is to leave it alone. 2. The maintenance interval of 6 years for lock-out relay testing is not consistent with 12 year interval of auxiliary relay testing or control circuit testing. No justification is provided for this increased testing interval of lock-out relays versus other electro-mechanical devices. These inconsistent testing intervals, within the same protection control schemes and protective devices, will complicate the industry's Protection System Maintenance Program and cause an increase in maintenance costs. Condition Based Monitoring or Performance Based Monitoring are not allowed on trip coil circuits or lock-out relays. This is inconsistent with current or future technology. Deviation from the 6 year testing

Organization	Yes or No	Question 4 Comment
		interval should be allowed, using CBM or PBM. The Standard should not present a barrier to technology advancements or industry initiatives. The continuous, frequent testing of these devices is detrimental to system reliability. 3. Disagree with testing of the dc control portion of the sudden pressure device as defined by the FAQ. We feel that this device and its wiring were deemed out of scope previously. Do not use the FAQ to modify the standard. The FAQ should strictly be used for clarification only. A standard that relies on a lengthy FAQ and multiple CAN's needs to be re-written concisely and clearly.
Response: Thank you for your comments **1. The drafting team recognizes the risk of human error trips when performing maintenance but believes these risks can be managed. Auxiliary relays must be maintained every 12 years, and may be included within the 12-year unmonitored control circuitry verification. Performance-based maintenance is an option if you want to extend your intervals beyond 12 years.** **2. The drafting team believes that electromechanical lockout relays need periodic operation and that they need to be exercised at the same six-year interval required for electromechanical relays. Performance-based maintenance is an option if you want to extend your intervals beyond six years.** **3. The need to verify the path from the sudden pressure relay trip contact through the auxiliary seal in and through to the lockout relay coil is clearly within the scope of PRC-005-2 as part of the Protection System control circuitry. The sensing element is omitted from PRC-005-2 testing requirements because the drafting team is unaware of industry-recognized activities or intervals for the sensing elements. The drafting team believes that Protection Systems that trip (or can trip) the BES should be included. This position is consistent with the currently-approved PRC-005-1b and consistent with the SAR for Project 2007-17. However, a future revision of PRC-005 will likely add sudden pressure relays in response to directives from FERC Order 758. The Supplementary Reference and FAQ Document provides supporting discussion and clarification but does not modify the standard in any way. The standard is drafted such that the requirements are fully stated; however, the entire field of maintenance of Protection Systems is sufficiently complex that that the drafting team has provided the Supplementary Reference and FAQ Document to share effective methods of meeting the requirements (as anticipated by the drafting team) and to share the drafting team's rationale in establishing the required maximum intervals and minimum activities.**		
O&M Group		None

Organization	Yes or No	Question 4 Comment
Idaho Power Company		None

END OF REPORT

Exhibit I

Discussion of Assignments of VRFs and VSLs

Project 2007-17 – PRC-005-2 Protection System Maintenance

This document provides the drafting team's justification for assignment of violation risk factors (VRFs) and violation severity levels (VSLs) for each requirement in PRC-005-2 — Protection System Maintenance.

Each primary requirement is assigned a VRF and a set of one or more VSLs. These elements support the determination of an initial value range for the Base Penalty Amount regarding violations of requirements in FERC-approved Reliability Standards, as defined in the ERO Sanction Guidelines.

The Protection System Maintenance and Testing Standard Drafting Team applied the following NERC criteria and FERC Guidelines when proposing VRFs and VSLs for the requirements under this project:

NERC Criteria - Violation Risk Factors

High Risk Requirement
A requirement that, if violated, could directly cause or contribute to bulk electric system instability, separation, or a cascading sequence of failures, or could place the bulk electric system at an unacceptable risk of instability, separation, or cascading failures; or, a requirement in a planning time frame that, if violated, could, under emergency, abnormal, or restorative conditions anticipated by the preparations, directly cause or contribute to bulk electric system instability, separation, or a cascading sequence of failures, or could place the bulk electric system at an unacceptable risk of instability, separation, or cascading failures, or could hinder restoration to a normal condition.

Medium Risk Requirement
A requirement that, if violated, could directly affect the electrical state or the capability of the bulk electric system, or the ability to effectively monitor and control the bulk electric system. However, violation of a medium risk requirement is unlikely to lead to bulk electric system instability, separation, or cascading failures; or, a requirement in a planning time frame that, if violated, could, under emergency, abnormal, or restorative conditions anticipated by the preparations, directly and adversely affect the electrical state or capability of the bulk electric system, or the ability to effectively monitor, control, or restore the bulk electric system. However, violation of a medium risk requirement is unlikely, under emergency, abnormal, or restoration conditions anticipated by the preparations, to lead to bulk electric system instability, separation, or cascading failures, nor to hinder restoration to a normal condition.

Lower Risk Requirement
A requirement that is administrative in nature and a requirement that, if violated, would not be expected to adversely affect the electrical state or capability of the bulk electric system, or the ability to effectively monitor and control the bulk electric system; or, a requirement that is administrative in nature and a requirement in a planning time frame that, if violated, would not, under the emergency, abnormal, or restorative conditions anticipated by the preparations, be expected to adversely affect the electrical state or capability of the bulk electric system, or the ability to effectively monitor, control, or restore the bulk electric system. A planning requirement that is administrative in nature.

FERC Violation Risk Factor Guidelines

Guideline (1) — Consistency with the Conclusions of the Final Blackout Report

The Commission seeks to ensure that Violation Risk Factors assigned to Requirements of Reliability Standards in these identified areas appropriately reflect their historical critical impact on the reliability of the Bulk-Power System.
In the VSL Order, FERC listed critical areas (from the Final Blackout Report) where violations could severely affect the reliability of the Bulk-Power System:

- Emergency operations
- Vegetation management
- Operator personnel training
- Protection systems and their coordination
- Operating tools and backup facilities
- Reactive power and voltage control
- System modeling and data exchange
- Communication protocol and facilities
- Requirements to determine equipment ratings
- Synchronized data recorders
- Clearer criteria for operationally critical facilities
- Appropriate use of transmission loading relief

Guideline (2) — Consistency within a Reliability Standard

The Commission expects a rational connection between the sub-Requirement Violation Risk Factor assignments and the main Requirement Violation Risk Factor assignment.

Guideline (3) — Consistency among Reliability Standards
The Commission expects the assignment of Violation Risk Factors corresponding to Requirements that address similar reliability goals in different Reliability Standards would be treated comparably.

Guideline (4) — Consistency with NERC's Definition of the Violation Risk Factor Level
Guideline (4) was developed to evaluate whether the assignment of a particular Violation Risk Factor level conforms to NERC's definition of that risk level.

Guideline (5) — Treatment of Requirements that Co-mingle More Than One Obligation
Where a single Requirement co-mingles a higher risk reliability objective and a lesser risk reliability objective, the VRF assignment for such Requirements must not be watered down to reflect the lower risk level associated with the less important objective of the Reliability Standard.

The following discussion addresses how the SDT considered FERC's VRF Guidelines 2 through 5. The team did not address Guideline 1 directly because of an apparent conflict between Guidelines 1 and 4. Whereas Guideline 1 identifies a list of topics that encompass nearly all topics within NERC's Reliability Standards and implies that these requirements should be assigned a "High" VRF, Guideline 4 directs assignment of VRFs based on the impact of a specific requirement to the reliability of the system. The SDT believes that Guideline 4 is reflective of the intent of VRFs in the first instance and therefore concentrated its approach on the reliability impact of the requirements.

PRC-005-2 Protection System Maintenance is a revision of PRC-005-1a Transmission and Generation Protection System Maintenance and Testing with the stated purpose: To document and implement programs for the maintenance of all Protection Systems affecting the reliability of the Bulk Electric System (BES) so that these Protection Systems are kept in working order. PRC-008-0 Implementation and Documentation of Underfrequency Load Shedding Equipment Maintenance Program, PRC-011-0 Undervoltage Load Shedding System Maintenance and Testing and PRC-017-0 Special Protection System Maintenance and Testing are also being replaced by merging them into PRC-005-2 in accordance with suggestions from FERC Order 693. PRC-005-2 also establishes maximum allowable maintenance intervals as directed by FERC in Order 693 in their discussion of the legacy standards PRC-005-1, PRC-008-0, PRC-011-0, and PRC-017-0.

PRC-005-2 has five (5) requirements that incorporate and enhance the intent of the requirements of PRC-005-1a, PRC-008-0, PRC-011-0, and PRC-017-0. Several Tables of minimum maintenance activities and maximum maintenance intervals are also included to addresses FERC's directives from Order 693. The revised standard requires that entities develop an appropriate Protection System Maintenance Program (PSMP), that they implement their PSMP, and that, in the event they are unable to restore Protection System Components to proper working order while performing maintenance, they initiate the follow-up activities necessary to resolve those maintenance issues.

The requirements of PRC-005-2 do not map, one-to-one, with the requirements of the legacy standards, each of which comingle various attributes addressed within the new standard; thus, a requirement-to-requirement comparison of VRFs is irrelevant. When developing VRFs for the

requirements of PRC-005-2, the Standard Drafting Team carefully considered the NERC criteria for developing VRFs, as well as the FERC VRF guidelines. Therefore, PRC-005-2 Requirements R3 and R4 are assigned a VRF of High, while Requirements R1, R2, and R5 are assigned VRFs of Medium.

PRC-005-2 Requirements R1 and R2 are related to developing and documenting a Protection System Maintenance Program. The Standard Drafting Team determined that the assignment of a VRF of Medium was consistent with the NERC criteria that violations of these requirements could directly affect the electrical state or the capability of the bulk electric system, or the ability to effectively monitor and control the bulk electric system but are unlikely to lead to bulk electric system instability, separation, or cascading failures. Additionally, a review of the body of existing NERC Standards with approved VRFs revealed that requirements with similar reliability objectives in other standards are largely assigned a VRF of Medium.

PRC-005-2 Requirements R3 and R4 are related to implementation of the Protection System Maintenance Program. The SDT determined that the assignment of a VRF of High was consistent with the NERC criteria that that violation of these requirements could directly cause or contribute to bulk electric system instability, separation, or a cascading sequence of failures, or could place the bulk electric system at an unacceptable risk of instability, separation, or cascading failures. Additionally, a review of the body of existing NERC Standards with approved VRFs revealed that requirements with similar reliability objectives in other standards are assigned a VRF of High.

PRC-005-2 Requirement R5 relates to the initiation of resolution of unresolved maintenance issues, which describe situations where an entity was unable to restore a Component to proper working order during the performance of the maintenance activity. The Standard Drafting Team determined that the assignment of a VRF of Medium was consistent with the NERC criteria that violation of this requirements could directly affect the electrical state or the capability of the bulk electric system, or the ability to effectively monitor and control the bulk electric system but are unlikely to lead to bulk electric system instability, separation, or cascading failures. Additionally, a review of the body of existing NERC Standards with approved VRFs revealed that requirements with similar reliability objectives in other standards are largely assigned a VRF of Medium.

NERC Criteria - Violation Severity Levels

Violation Severity Levels (VSLs) define the degree to which compliance with a requirement was not achieved. Each requirement must have at least one VSL. While it is preferable to have four VSLs for each requirement, some requirements do not have multiple "degrees" of noncompliant performance and may have only one, two, or three VSLs.

Violation severity levels should be based on the guidelines shown in the table below:

Lower	Moderate	High	Severe
Missing a minor element (or a small percentage) of the required performance The performance or product measured has significant value as it almost meets the full intent of the requirement.	Missing at least one significant element (or a moderate percentage) of the required performance. The performance or product measured still has significant value in meeting the intent of the requirement.	Missing more than one significant element (or is missing a high percentage) of the required performance or is missing a single vital Component. The performance or product has limited value in meeting the intent of the requirement.	Missing most or all of the significant elements (or a significant percentage) of the required performance. The performance measured does not meet the intent of the requirement or the product delivered cannot be used in meeting the intent of the requirement.

FERC Order on Violation Severity Levels

In its June 19, 2008 Order on Violation Severity Levels, FERC indicated it would use the following four guidelines for determining whether to approve VSLs:

Guideline 1: Violation Severity Level Assignments Should Not Have the Unintended Consequence of Lowering the Current Level of Compliance

- Compare the VSLs to any prior Levels of Non-compliance and avoid significant changes that may encourage a lower level of compliance than was required when Levels of Non-compliance were used.

Guideline 2: Violation Severity Level Assignments Should Ensure Uniformity and Consistency in the Determination of Penalties

- Guideline 2a: A violation of a "binary" type requirement must be a "Severe" VSL.
- Guideline 2b: Do not use ambiguous terms such as "minor" and "significant" to describe noncompliant performance.

Guideline 3: Violation Severity Level Assignment Should Be Consistent with the Corresponding Requirement

- VSLs should not expand on what is required in the requirement.

Guideline 4: Violation Severity Level Assignment Should Be Based on A Single Violation, Not on A Cumulative Number of Violations

- . . . unless otherwise stated in the requirement, each instance of non-compliance with a requirement is a separate violation. Section 4 of the Sanction Guidelines states that assessing penalties on a per violation per day basis is the "default" for penalty calculations.

VRF and VSL Justifications

VRF and VSL Justifications – PRC-005-2, R1	
Proposed VRF	**Medium**
NERC VRF Discussion	Failure to establish a Protection System Maintenance Program (PSMP) for Protection Systems designed to provide protection for BES Element(s) could directly affect the electrical state or the capability of the bulk power system. However, violation of this requirement is unlikely to lead to bulk power system instability, separation, or cascading failures. The applicable entities are always responsible for maintaining the reliability of the bulk power system regardless of the situation. This VRF emphasizes the risk to system performance that results from mal-performing Protection System Components. Failure to establish a Protection System Maintenance Program (PSMP) for Protection Systems will not, by itself, lead to instability, separation, or cascading failures. Thus, the requirement meets NERC's criteria for a Medium VRF.
FERC VRF G1 Discussion	Guideline 1- Consistency w/ Blackout Report: N/A
FERC VRF G2 Discussion	Guideline 2- Consistency within a Reliability Standard: The requirement has no sub-requirements so only one VRF was assigned. The requirement utilizes Parts to identify the items to be included within a Protection System Maintenance Program. The VRF for this requirement is consistent with others in the standard with regard to relative risk; therefore, there is no conflict.
FERC VRF G3 Discussion	Guideline 3- Consistency among Reliability Standards: The SDT has determined that there is no consistency among existing approved Standards relative to requirements of this nature. The SDT has assigned a MEDIUM VRF, which is consistent with recent FERC guidance on FAC-008-3 Requirement R2 and FAC-013-2 Requirement R1, which are similar in nature to PRC-005-2 Requirement R1.

VRF and VSL Justifications – PRC-005-2, R1	
Proposed VRF	**Medium**
FERC VRF G4 Discussion	Guideline 4- Consistency with NERC Definitions of VRFs: Failure to establish a Protection System Maintenance Program (PSMP) for Protection Systems designed to provide protection for BES Element(s) could directly affect the electrical state or the capability of the bulk power system. However, violation of this requirement is unlikely to lead to bulk power system instability, separation, or cascading failures. The applicable entities are always responsible for maintaining the reliability of the bulk power system regardless of the situation. This VRF emphasizes the risk to system performance that results from mal-performing Protection System Components. Failure to establish a Protection System Maintenance Program (PSMP) for Protection Systems will not, by itself, lead to instability, separation, or cascading failures. Thus, the requirement meets NERC's criteria for a Medium VRF..
FERC VRF G5 Discussion	Guideline 5- Treatment of Requirements that Co-mingle More than One Obligation: This requirement establishes a single risk-level, and the assigned VRF is consistent with that risk level.

Proposed VSL – PRC-005-2, R1			
Lower	**Moderate**	**High**	**Severe**
The responsible entity's PSMP failed to specify whether one Component Type is being addressed by time-based or performance-based maintenance, or a combination of both. (Part 1.1)	The responsible entity's PSMP failed to specify whether two Component Types are being addressed by time-based or performance-based maintenance, or a combination of both. (Part 1.1)	The responsible entity's PSMP failed to include the applicable monitoring attributes applied to each Protection System Component Type consistent with the maintenance intervals specified in Tables 1-1 through 1-	The responsible entity failed to establish a PSMP. OR The responsible entity failed to specify whether three or more Component Types are being

Proposed VSL – PRC-005-2, R1			
Lower	**Moderate**	**High**	**Severe**
OR The responsible entity's PSMP failed to include applicable station batteries in a time-based program (Part 1.1)		5, Table 2, and Table 3 where monitoring is used to extend the maintenance intervals beyond those specified for unmonitored Protection System Components (Part 1.2).	addressed by time-based or performance-based maintenance, or a combination of both. (Part 1.1).

VRF and VSL Justifications – PRC-005-2, R1	
NERC VSL Guidelines	Meets NERC's VSL Guidelines—There is an incremental aspect to the violation and the VSLs follow the guidelines for incremental violations.
FERC VSL G1 Violation Severity Level Assignments Should Not Have the Unintended Consequence of Lowering the Current Level of Compliance	This VSL is consistent with the current VSLs associated with the existing requirements of the standards being replaced by this proposed standard.
FERC VSL G2 Violation Severity Level Assignments Should Ensure Uniformity and Consistency in the Determination of Penalties Guideline 2a: The Single Violation Severity Level Assignment Category for "Binary" Requirements Is Not Consistent Guideline 2b: Violation Severity Level Assignments that Contain Ambiguous Language	Guideline 2a: N/A Guideline 2b: The proposed VSL does not use any ambiguous terminology, thereby supporting uniformity and consistency in the determination of similar penalties for similar violations.

VRF and VSL Justifications – PRC-005-2, R1	
FERC VSL G3 Violation Severity Level Assignment Should Be Consistent with the Corresponding Requirement	The proposed VSL uses similar terminology to that used in the associated requirement, and is therefore consistent with the requirement.
FERC VSL G4 Violation Severity Level Assignment Should Be Based on A Single Violation, Not on A Cumulative Number of Violations	The VSL is based on a single violation and not cumulative violations.

VRF and VSL Justifications – PRC-005-2, R2	
Proposed VRF	**Medium**
NERC VRF Discussion	Failure to properly establish a performance-based Protection System Maintenance Program (PSMP) for Protection Systems designed to provide protection for BES Element(s) could directly affect the electrical state or the capability of the bulk power system. However, violation of this requirement is unlikely to lead to bulk power system instability, separation, or cascading failures. The applicable entities are always responsible for maintaining the reliability of the bulk power system regardless of the situation. This VRF emphasizes the risk to system performance that results from mal-performing Protection System Components. Failure to properly establish a performance-based Protection System Maintenance Program (PSMP) for Protection Systems will not, by itself, lead to instability, separation, or cascading failures. Thus, the requirement meets NERC's criteria for a Medium VRF.
FERC VRF G1 Discussion	Guideline 1- Consistency w/ Blackout Report: N/A
FERC VRF G2 Discussion	Guideline 2- Consistency within a Reliability Standard: The requirement has no subpart(s); therefore, only one VRF was assigned and no conflict(s) exist.
FERC VRF G3 Discussion	Guideline 3- Consistency among Reliability Standards: The SDT has determined that there is no consistency among existing approved Standards relative to requirements of this nature. The SDT has assigned a MEDIUM VRF, which is consistent with recent FERC guidance on FAC-008-3 Requirement R2 and FAC-013-2 Requirement R1, which are similar in nature to PRC-005-2 Requirement R1.
FERC VRF G4 Discussion	Guideline 4- Consistency with NERC Definitions of VRFs: Failure to properly establish a performance-based Protection System Maintenance Program (PSMP) for .

VRF and VSL Justifications – PRC-005-2, R2	
Proposed VRF	**Medium**
	Protection Systems designed to provide protection for BES Element(s) could directly affect the electrical state or the capability of the bulk power system. However, violation of this requirement is unlikely to lead to bulk power system instability, separation, or cascading failures. The applicable entities are always responsible for maintaining the reliability of the bulk power system regardless of the situation. This VRF emphasizes the risk to system performance that results from mal-performing Protection System Components. Failure to properly establish a performance-based Protection System Maintenance Program (PSMP) for Protection Systems will not, by itself, lead to instability, separation, or cascading failures. Thus, the requirement meets NERC's criteria for a Medium VRF.
FERC VRF G5 Discussion	Guideline 5- Treatment of Requirements that Co-mingle More than One Obligation: This requirement establishes a single risk-level, and the assigned VRF is consistent with that risk level.

Proposed VSL – PRC-005-2, R2			
Lower	**Moderate**	**High**	**Severe**
The responsible entity uses performance-based maintenance intervals in its PSMP but failed to reduce Countable Events to no more than 4% within three years.	N/A	The responsible entity uses performance-based maintenance intervals in its PSMP but failed to reduce Countable Events to no more than 4% within four years.	The responsible entity uses performance-based maintenance intervals in its PSMP but: 1)Failed to establish the technical justification described within Requirement R2 for the initial use of the performance-based PSMP

Proposed VSL – PRC-005-2, R2			
Lower	**Moderate**	**High**	**Severe**
			OR 2) Failed to reduce countable events to no more than 4% within five years OR 3) Maintained a segment with less than 60 Components OR 4) Failed to: • Annually update the list of Components, OR • Annually perform maintenance on the greater of 5% of the segment population or 3 Components, OR • Annually analyze the program activities and results for each segment.

VRF and VSL Justifications – PRC-005-2, R2	
NERC VSL Guidelines	Meets NERC's VSL Guidelines—There is an incremental aspect to the violation and the VSLs follow the guidelines for incremental violations.
FERC VSL G1 Violation Severity Level Assignments Should Not Have the Unintended Consequence of Lowering the Current Level of Compliance	This VSL is consistent with the current VSLs associated with the existing requirements of the standards being replaced by this proposed standard.
FERC VSL G2 Violation Severity Level Assignments Should Ensure Uniformity and Consistency in the Determination of Penalties Guideline 2a: The Single Violation Severity Level Assignment Category for "Binary" Requirements Is Not Consistent	Guideline 2a: N/A Guideline 2b: The proposed VSL does not use any ambiguous terminology, thereby supporting uniformity and consistency in the determination of similar penalties for similar violations.

VRF and VSL Justifications – PRC-005-2, R2	
Guideline 2b: Violation Severity Level Assignments that Contain Ambiguous Language	
FERC VSL G3 Violation Severity Level Assignment Should Be Consistent with the Corresponding Requirement	The proposed VSL uses similar terminology to that used in the associated requirement, and is therefore consistent with the requirement.
FERC VSL G4 Violation Severity Level Assignment Should Be Based on A Single Violation, Not on A Cumulative Number of Violations	The VSL is based on a single violation and not cumulative violations.

VRF and VSL Justifications – PRC-005-2, R3	
Proposed VRF	**High**
NERC VRF Discussion	Failure to implement and follow its Protection System Maintenance Program (PSMP) could, under emergency, abnormal, or restorative conditions anticipated by the preparations, directly cause or contribute to bulk electric system instability, separation, or a cascading sequence of failures, or could place the bulk electric system at an unacceptable risk of instability, separation, or cascading failures, or could hinder restoration to a normal condition. Thus, this requirement meets the criteria for a High VRF.
FERC VRF G1 Discussion	Guideline 1- Consistency w/ Blackout Report: N/A
FERC VRF G2 Discussion	Guideline 2- Consistency within a Reliability Standard: The requirement has no subpart(s); therefore, only one VRF was assigned and no conflict(s) exist.
FERC VRF G3 Discussion	Guideline 3- Consistency among Reliability Standards: The only Reliability Standards with similar goals are those being replaced by this standard, and the High VRF assignment for this requirement is consistent with the assigned VRFs for companion requirements in those existing standards.
FERC VRF G4 Discussion	Guideline 4- Consistency with NERC Definitions of VRFs: Failure to implement and follow its Protection System Maintenance Program (PSMP) could, under emergency, abnormal, or restorative conditions anticipated by the preparations, directly cause or contribute to bulk electric system instability, separation, or a cascading sequence of failures, or could place the bulk electric system at an unacceptable risk of instability, separation, or cascading failures, or could hinder restoration to a normal condition. Thus, this requirement meets the criteria for a High VRF.
FERC VRF G5 Discussion	Guideline 5- Treatment of Requirements that Co-mingle More than One Obligation: This requirement establishes a single risk-level, and the assigned VRF is consistent with that risk level.

Proposed VSL – PRC-005-2, R3			
Lower	**Moderate**	**High**	**Severe**
For Protection System Components included within a time-based maintenance program, the responsible entity failed to maintain 5% or less of the total Components included within a specific Protection System Component Type, in accordance with the minimum maintenance activities and maximum maintenance intervals prescribed within Tables 1-1 through 1-5, Table 2, and Table 3.	For Protection System Components included within a time-based maintenance program, the responsible entity failed to maintain more than 5% but 10% or less of the total Components included within a specific Protection System Component Type, in accordance with the minimum maintenance activities and maximum maintenance intervals prescribed within Tables 1-1 through 1-5, Table 2, and Table 3.	For Protection System Components included within a time-based maintenance program, the responsible entity failed to maintain more than 10% but 15% or less of the total Components included within a specific Protection System Component Type, in accordance with the minimum maintenance activities and maximum maintenance intervals prescribed within Tables 1-1 through 1-5, Table 2, and Table 3.	For Protection System Components included within a time-based maintenance program, the responsible entity failed to maintain more than 15% of the total Components included within a specific Protection System Component Type, in accordance with the minimum maintenance activities and maximum maintenance intervals prescribed within Tables 1-1 through 1-5, Table 2, and Table 3.

VRF and VSL Justificati3ons – PRC-005-2, R3	
NERC VSL Guidelines	Meets NERC's VSL Guidelines—There is an incremental aspect to the violation and the VSLs follow the guidelines for incremental violations.
FERC VSL G1 Violation Severity Level Assignments Should Not Have the Unintended Consequence of Lowering the Current Level of Compliance	This VSL is consistent with the current VSLs associated with the existing requirements of the standards being replaced by this proposed standard.
FERC VSL G2 Violation Severity Level Assignments Should Ensure Uniformity and Consistency in the Determination of Penalties Guideline 2a: The Single Violation Severity Level Assignment Category for "Binary" Requirements Is Not Consistent Guideline 2b: Violation Severity Level Assignments that Contain Ambiguous Language	Guideline 2a: N/A Guideline 2b: The proposed VSL does not use any ambiguous terminology, thereby supporting uniformity and consistency in the determination of similar penalties for similar violations.

VRF and VSL Justifications – PRC-005-2, R3	
FERC VSL G3 Violation Severity Level Assignment Should Be Consistent with the Corresponding Requirement	The proposed VSL uses similar terminology to that used in the associated requirement, and is therefore consistent with the requirement.
FERC VSL G4 Violation Severity Level Assignment Should Be Based on A Single Violation, Not on A Cumulative Number of Violations	The VSL is based on a single violation and not cumulative violations.

VRF and VSL Justifications – PRC-005-2, R4	
Proposed VRF	**High**
NERC VRF Discussion	Failure to implement and follow its Protection System Maintenance Program (PSMP) could, under emergency, abnormal, or restorative conditions anticipated by the preparations, directly cause or contribute to bulk electric system instability, separation, or a cascading sequence of failures, or could place the bulk electric system at an unacceptable risk of instability, separation, or cascading failures, or could hinder restoration to a normal condition. Thus, this requirement meets the criteria for a High VRF.
FERC VRF G1 Discussion	Guideline 1- Consistency w/ Blackout Report: N/A
FERC VRF G2 Discussion	Guideline 2- Consistency within a Reliability Standard: The requirement has no subpart(s); therefore, only one VRF was assigned and no conflict(s) exist.
FERC VRF G3 Discussion	Guideline 3- Consistency among Reliability Standards: The only Reliability Standards with similar goals are those being replaced by this standard, and the High VRF assignment for this requirement is consistent with the assigned VRFs for companion requirements in those existing standards.
FERC VRF G4 Discussion	Guideline 4- Consistency with NERC Definitions of VRFs: Failure to implement and follow its Protection System Maintenance Program (PSMP) could, under emergency, abnormal, or restorative conditions anticipated by the preparations, directly cause or contribute to bulk electric system instability, separation, or a cascading sequence of failures, or could place the bulk electric system at an unacceptable risk of instability, separation, or cascading failures, or could hinder restoration to a normal condition. Thus, this requirement meets the criteria for a High VRF.
FERC VRF G5 Discussion	Guideline 5- Treatment of Requirements that Co-mingle More than One Obligation: This requirement establishes a single risk-level, and the assigned VRF is consistent with that risk level.

Proposed VSL – PRC-005-2, R4			
Lower	**Moderate**	**High**	**Severe**
For Protection System Components included within a performance-based maintenance program, the responsible entity failed to maintain 5% or less of the annual scheduled maintenance for a specific Protection System Component Type in accordance with their performance-based PSMP.	For Protection System Components included within a performance-based maintenance program, the responsible entity failed to maintain more than 5% but 10% or less of the annual scheduled maintenance for a specific Protection System Component Type in accordance with their performance-based PSMP.	For Protection System Components included within a performance-based maintenance program, the responsible entity failed to maintain more than 10% but 15% or less of the annual scheduled maintenance for a specific Protection System Component Type in accordance with their performance-based PSMP.	For Protection System Components included within a performance-based maintenance program, the responsible entity failed to maintain more than 15% of the annual scheduled maintenance for a specific Protection System Component Type in accordance with their performance-based PSMP.

VRF and VSL Justifications – PRC-005-2, R4	
NERC VSL Guidelines	Meets NERC's VSL Guidelines—There is an incremental aspect to the violation and the VSLs follow the guidelines for incremental violations.
FERC VSL G1 Violation Severity Level Assignments Should Not Have the Unintended Consequence of Lowering the Current Level of Compliance	This VSL is consistent with the current VSLs associated with the existing requirements of the standards being replaced by this proposed standard.
FERC VSL G2 Violation Severity Level Assignments Should Ensure Uniformity and Consistency in the Determination of Penalties Guideline 2a: The Single Violation Severity Level Assignment Category for "Binary" Requirements Is Not Consistent Guideline 2b: Violation Severity Level Assignments that Contain Ambiguous Language	Guideline 2a: N/A Guideline 2b: The proposed VSL does not use any ambiguous terminology, thereby supporting uniformity and consistency in the determination of similar penalties for similar violations.

VRF and VSL Justifications – PRC-005-2, R4	
FERC VSL G3 Violation Severity Level Assignment Should Be Consistent with the Corresponding Requirement	The proposed VSL uses similar terminology to that used in the associated requirement, and is therefore consistent with the requirement.
FERC VSL G4 Violation Severity Level Assignment Should Be Based on A Single Violation, Not on A Cumulative Number of Violations	The VSL is based on a single violation and not cumulative violations.

VRF and VSL Justifications – PRC-005-2, R5	
Proposed VRF	**Medium**
NERC VRF Discussion	Failure to initiate resolution of an unresolved maintenance issue for a Protection System Component could directly affect the electrical state or the capability of the bulk power system. However, violation of this requirement is unlikely to lead to bulk power system instability, separation, or cascading failures. The applicable entities are always responsible for maintaining the reliability of the bulk power system regardless of the situation. This VRF emphasizes the risk to system performance that results from mal-performing Protection System Components. Failure to initiate resolution of an unresolved maintenance issue for a Protection System Component will not, by itself, lead to instability, separation, or cascading failures. Thus, the requirement meets NERC's criteria for a Medium VRF.
FERC VRF G1 Discussion	Guideline 1- Consistency w/ Blackout Report: N/A
FERC VRF G2 Discussion	Guideline 2- Consistency within a Reliability Standard: The requirement has no subpart(s); therefore, only one VRF was assigned and no conflict(s) exist.
FERC VRF G3 Discussion	Guideline 3- Consistency among Reliability Standards: The only requirement within approved Standards, PRC-004-2a Requirements R1 and R2 contain a similar requirement and is assigned a HIGH VRF. However, these requirements contain several subparts, and the VRF must address the most egregious risk related to these subparts, and a comparison to these requirements may be irrelevant. PRC-022-1 Requirement R1.5 contains only a similar requirement, and is assigned a MEDIUM VRF. FAC-003-2 Requirement R5 contains only a similar requirement, and is assigned a MEDIUM VRF.
FERC VRF G4 Discussion	Guideline 4- Consistency with NERC Definitions of VRFs: Failure to initiate resolution of an unresolved maintenance issue for a Protection System Component could directly affect the electrical state or the capability of the bulk power system.

VRF and VSL Justifications – PRC-005-2, R5			
Proposed VRF	**Medium**		
	However, violation of this requirement is unlikely to lead to bulk power system instability, separation, or cascading failures. The applicable entities are always responsible for maintaining the reliability of the bulk power system regardless of the situation. This VRF emphasizes the risk to system performance that results from mal-performing Protection System Components. Failure to initiate resolution of an unresolved maintenance issue for a Protection System Component will not, by itself, lead to instability, separation, or cascading failures. Thus, the requirement meets NERC's criteria for a Medium VRF.		
FERC VRF G5 Discussion	Guideline 5- Treatment of Requirements that Co-mingle More than One Obligation: This requirement establishes a single risk-level, and the assigned VRF is consistent with that risk level.		
Proposed VSL – PRC-005-2, R5			
Lower	**Moderate**	**High**	**Severe**
The responsible entity failed to undertake efforts to correct 5 or fewer identified Unresolved Maintenance Issues.	The responsible entity failed to undertake efforts to correct greater than 5, but less than or equal to 10 identified Unresolved Maintenance Issues.	The responsible entity failed to undertake efforts to correct greater than 10, but less than or equal to 15 identified Unresolved Maintenance Issues.	The responsible entity failed to undertake efforts to correct greater than 15 identified Unresolved Maintenance Issues.

VRF and VSL Justifications – PRC-005-2, R5	
NERC VSL Guidelines	Meets NERC's VSL Guidelines—There is an incremental aspect to the violation and the VSLs follow the guidelines for incremental violations.
FERC VSL G1 Violation Severity Level Assignments Should Not Have the Unintended Consequence of Lowering the Current Level of Compliance	This is a new Requirement; consequently, there is no prior level of compliance.
FERC VSL G2 Violation Severity Level Assignments Should Ensure Uniformity and Consistency in the Determination of Penalties Guideline 2a: The Single Violation Severity Level Assignment Category for "Binary" Requirements Is Not Consistent Guideline 2b: Violation Severity Level Assignments that Contain Ambiguous Language	Guideline 2a: N/A Guideline 2b: The proposed VSL does not use any ambiguous terminology, thereby supporting uniformity and consistency in the determination of similar penalties for similar violations.

VRF and VSL Justifications – PRC-005-2, R5	
FERC VSL G3 Violation Severity Level Assignment Should Be Consistent with the Corresponding Requirement	The proposed VSL uses similar terminology to that used in the associated requirement, and is therefore consistent with the requirement.
FERC VSL G4 Violation Severity Level Assignment Should Be Based on A Single Violation, Not on A Cumulative Number of Violations	The VSL is based on a single violation and not cumulative violations.

Exhibit J

Record of Development of Proposed Reliability Standard PRC-005-2

Project 2007-17
Protection System Maintenance and Testing

Related Files

Status:
PRC-005-2 will be presented to the NERC Board of Trustees for adoption in November 2012 and if adopted, filed with regulators for approval.

Purpose/Industry Need:
The purpose of standard PRC-005 should remain "To ensure all transmission and generation Protection Systems affecting the reliability of the Bulk Electric System (BES) are maintained and tested."

In Order 693, the Federal Energy Regulatory Commission directed that changes be made to these standards.

These standards should be consolidated into a single standard to reduce the costs of compliance and a number of technical short comings in these standards should be corrected to provide reliable performance when responding to abnormal system conditions.

Draft	Action	Dates	Results	Consideration of Comments
Draft 4 **Standard PRC-005-2** Clean **(225)** | Redline to Last Posting**(226)** **Implementation Plan** Clean **(227)** **Supporting Materials:** Definition of Protection System **(228)**	Recirculation Ballot Info **(241)** Vote>>	10/15/12 - 10/24/12 (closed)	Summary **(242)** Ballot Results **(243)**	

Supplemental Reference & FAQ Clean **(229)** | Redline to Last Posting**(230)** **Technical Justification** Clean **(231)** | Redline **(232)** **Mapping Document** Clean **(233)** Table of Issues and Directives **(234)** **VRF and VSL Justification** Clean **(235)** | Redline **(236)** **Last Approved Versions of Standards to be Retired:** PRC-005-1.1b **(237)** PRC-008-0 **(238)** PRC-011-0 **(239)** PRC-017-0 **(240)**				

Draft 4 **Standard PRC-005-2** Clean **(199)** | Redline to Last Posting **(200)** **Implementation Plan** Clean **(201)** | Redline to Last Posting**(202)** **Supporting Materials:** Unofficial Comment Form (Word)**(203)** Definition of Protection System **(204)** (Updated 8/16/12) **Supplemental Reference & FAQ** Clean**(205)** | Redline to Last Posting **(206)** **Technical Justification** Clean **(207)** | Redline **(208)** **Mapping Document** Clean **(209)** | Redline to Last Posting **(210)**				
	Successive Ballot Updated Info **(218)** Info **(219)** Vote>>	08/17/12 - 08/27/12 (closed)	Summary **(221)** Ballot Results **(222)**	
	Comment Period Info **(220)** Submit Comments>>	07/27/12 - 08/27/12 (closed)	Comments Received **(223)**	Consideration of Comments **(224)**

Table of Issues and Directives **(211)** **VRF and VSL Justification** Clean **(212)** | Redline **(213)** **Last Approved Versions of Standards to be Retired:** PRC-005-1.1b **(214)** PRC-008-0 **(215)** PRC-011-0 **(216)** PRC-017-0 **(217)**				
Draft 3 **Standard PRC-005-2** Clean **(170)** | Redline to Last Posting **(171)** **Implementation Plan** Clean **(172)** | Redline to Last Posting **(173)** **Supporting Materials:** Definition of Protection System **(174)** IEEE Stationary Battery	Successive Ballot Updated Info **(191)** Info **(192)**	06/18/12 - 06/27/12 (closed)	Summary **(194)** Ballot Results **(195)** Non-binding Poll Results **(196)**	
	Formal Comment Period Info **(193)** Submit Comments>>	05/29/12 - 06/27/12 (closed)	Comments Received **(197)**	Consideration of Comments **(198)**

Committee NERC Task Force Report and SDT Response **(175)** **For Information:** Draft SAR for Phase 2 of Project 2007-17 **(176)** **Supplemental Reference & FAQ** Clean **(177)** | Redline to Last Posting **(178)** **Technical Justification** Clean **(179)** | Redline **(180)** **Mapping Document** Clean **(181)** | Redline to Last Posting **(182)** Table of Issues and Directives **(183)** **VRF and VSL Justification** Clean **(184)** | Redline **(185)** Unofficial Comment Form (Word) **(186)** **Last Approved Versions of Standards to be**				

Retired: PRC-005-1 **(187)** PRC-008-0 **(188)** PRC-011-0 **(189)** PRC-017-0 **(190)**				
Draft 2 **Standard PRC-005-2** Clean **(145)** | Redline to Last Posting **(146)** **Implementation Plan** Clean **(147)** | Redline to Last Posting **(148)** **SAR** Clean **(149)** | Redline to Last Posting **(150)** **Supporting Materials:** Definition of Protection System **(151)** **Supplemental Reference & FAQ** Clean **(152)** | Redline to Last Posting **(153)** Technical Justification **(154)** Mapping Document**(155)**	Successive Ballot and Non-binding Poll Updated Info **(163)** Vote>>	03/19/12 - 03/28/12 (closed)	Full Record **(166)** Non-binding Poll Results **(167)**	
	Formal Comment Period Updated Info **(164)** Info **(165)** Submit Comments>>	02/28/12 - 03/28/12 (closed)	Comments Received **(168)**	Consideration of Comments **(169)**

Table of Issues and Directives**(156)** VRF and VSL Justification **(157)** Unofficial Comment Form**(158)** **Last Approved Versions of Standards to be Retired:** PRC-005-1**(159)** PRC-008-0 **(160)** PRC-011-0 **(161)** PRC-017-0 **(162)**				
Drafting Team Nominations	Nomination Period Info **(144)** Submit Nomination>>	09/01/11 - 09/23/11 (closed)		
Standard PRC-005-2 Clean **(124)** | Redline to Recirc Ballot**(125)** **Implementation Plan** Clean**(126)** | Redline to Recirc Ballot**(127)** SAR**(128)** **Supporting**	Initial Ballot and Non-Binding Poll of VRFs and VSLs Info **(138)** Vote>>	09/19/11 - 09/29/11 (closed)	Summary **(139)** Full Record **(140)** Non-Binding Poll Results **(141)**	Consideration of Comments **(143)**
	Formal Comment Period Submit Comments>>	08/15/11 - 09/29/11 (closed)	Comments Received **(142)**	

Materials: Definition of Protection System**(129)** **Supplemental Reference & FAQ** Clean**(130)** | Redline to Last Posting **(131)** Mapping Document**(132)** Unofficial Comment Form**(133)** **Last Approved Versions of Standards to be Retired** PRC-005-1**(134)** PRC-008-0 **(135)** PRC-011-0 **(136)** PRC-017-0 **(137)**	Join Ballot Pools>> (Initial Ballot and Non-Binding Poll)	08/15/11 - 09/14/11 (closed)		
After PRC-005-2 failed to reach ballot pool approval in the recirculation ballot that ended on 6/30/11, the drafting team revised the standard. The Standards Committee authorized re-initiating the project with a posting of the SAR and revised standard for a 45-day comment period, with an initial ballot of the standard conducted during the last 10 days of the comment period.				
Standard Draft 4 PRC-005-2 Clean **(109)**| Redline to Last Posting**(110)** Implementation Plan for Standard Clean**(111)** |	Recirculation Ballot and Non-binding Poll Info **(120)** Vote>>	6/20/11-6/30/11 (closed)	Summary**(121)** Full Record**(122)** Non-Binding Poll Results**(123)**	

Redline to Last Posting**(112)** **Supporting Materials:** Definition for Approval**(113)** Supplemental Reference & FAQ Clean **(114)**| Redline to Last Posting**(115)** **Last Approved Versions of Standards to be Retired** PRC-005-1**(116)** PRC-008-0 **(117)** PRC-011-0 **(118)** PRC-017-0 **(119)**				
Standard Draft 4 PRC-005-2 Clean **(96)** | Redline to Last Posting **(97)** Implementation Plan for Standard Clean **(98)**| Redline to Last Posting**(99)** **Supporting Materials:** Comment Form (Word)**(100)**	Successive Ballot and Non-Binding Poll Info **(102)** Vote>>	05/03/11 - 05/13/11 (closed)	Summary Update **(104)** Full Records Update **(105)** Non-Binding Poll Results**(106)**	Consideration of Comments **(108)**
	Comment Period Submit Comments>> Info**(103)**	04/13/11 - 05/13/11 (closed)	Comments Received **(107)**	

Supplemental Reference & FAQ Clean **(101)**				
Standard Draft 3 PRC-005-2 Clean **(73)**| Redline to Last Posting **(74)** Implementation Plan for Standard Clean **(75)**| Redline to Last Posting **(76)**	Successive Ballot and Non-binding Poll of VRFs and VSLs Updated Info **(86)** Info **(87)** Join>>	12/10/10-12/20/10 (closed) Successive Ballot (closed) Non-binding Poll of VRFs and VSLs (closed)	Summary **(89)** Full Records **(90)** Non-Binding Poll Results **(91)**	Consideration of Comments **(93)** Consideration of Comments **(94)**
Supporting Materials Comment Form (Word)**(77)** Frequently Asked Questions Clean **(78)**| Redline to Last Posting**(79)** Supplemental Reference Clean**(80)** |Redline to Last Posting **(81)** Last Approved Versions of Standards to be Retired PRC-005-1 **(82)** PRC-008-0 **(83)** PRC-011-0 **(84)**	Comment Period Submit Comments for Standard >> Info **(88)**	11/17/10-12/17/10 (closed)	Comments Received **(92)**	Consideration of Comments **(95)**

PRC-017-0 **(85)**				
Draft 5 Definition of "Protection System" Clean **(66)** | Redline to last approval **(67)** Implementation Plan for Definition Clean **(68)** | Redline to last posting **(69)**	Recirculation Ballot >> Vote>> Info **(70)**	11/01/10 - 11/11/10 (closed)	Summary **(71)** Full Record **(72)**	
Draft 4 Definition of "Protection System" Clean**(54)** | Redline to Second Ballot **(55)** Redline to Last Approval**(56)** Implementation Plan for Definition Clean **(57)** Supporting Materials: Comment Form (Word) **(58)**	Successive Ballot >> Vote>> Info **(59)**	10/2/10 - 10/14/10 (closed)	Summary **(61)** Full Record **(62)**	Consideration of Comments **(64)**
	30-day Formal Comment Period Info **(60)** Submit Comments>>	9/13/10 - 10/12/10 (closed)	Comments Received **(63)**	Consideration of Comments **(65)**

Draft 3 Definition of "Protection System" Clean **(46)**| Redline to Initial Ballot **(47)** Implementation Plan for Definition Clean **(48)** | Redline to Initial Ballot **(49)**	Second Ballot for Definition Vote>> | Info **(50)**	07/23/10 - 08/02/10 (closed)	Summary **(51)** Full Record **(52)**	Consideration of Comments (definition) **(53)**
Draft 2 PRC-005-2 Clean **(19)**| Redline to Last Posting **(20)** Implementation Plan for Standard Clean **(21)**| Redline to Last Posting **(22)** Implementation Plan for Definition **(23)** **Supporting Materials:** Comment Form for Proposed Definition (Word)**(24)**	Initial Ballots and Non-binding VRF/VSL Poll Vote>> | Info**(32)**	07/08/10 - 07/17/10 (closed)	Summary **(35)** Full Record **(36)** Standard Full Record **(37)** Definition Non-binding Poll Results**(38)**	Consideration of Comments (standard) **(41)** Consideration of Comments (definition) **(42)** Consideration of Comments (non-binding poll) **(43)**
	Pre-ballot Review Join>> | Info **(33)**	06/11/10 - 07/02/10 (closed)		
	Comment Period Submit Comments (For Standard)	06/11/10 - 07/16/10 (closed)	Comments Received (Standard)**(39)** Comments Received (Definition)**(40)**	Consideration of Comments (definition) **(44)** Consideration of Comments **(45)**

Comment Form for Standard (Word) **(25)** Frequently Asked Questions Clean **(26)**| Redline to Last Posting**(27)** Supplemental Reference Clean **(28)**| Redline to Last Posting **(29)** Definition of "Protection System" **(30)** Proposed Version of Issues Database **(31)**	Submit Comments (For Definition) Info **(34)**			
Draft 1 Protection System Maintenance and Testing Standard PRC-005-2 **(9)** **Supporting Materials:** Comment Form (Word) **(10)** Implementation Plan **(11)** Supplementary Reference **(12)**	Comment Period Info **(16)** Submit Comments>>	07/24/09 - 09/08/09 (closed)	Comments Received **(17)**	Consideration of Comments **(18)**

Status of Addressing Issues **(13)** Frequently Asked Questions **(14)** Assessment of Impact of Proposed Modification to the Definition of "Protection System" **(15)**				
	Standard Drafting Team Nominations Info **(7)** Submit Nomination **(8)**	08/15/07 - 08/29/07 (closed)		
Draft SAR Version 1 Protection System Maintenance and Testing Draft SAR Version 1 **(1)** **Supporting Materials**: NERC SPCTF Assessment of Standards **(2)**	Comment Period Info **(3)** Submit Comments**(4)**	06/11/07 - 07/10/07 (closed)	Comments Received **(5)**	Consideration of Comments **(6)**

NERC
NORTH AMERICAN ELECTRIC RELIABILITY CORPORATION

E-mail completed form to
maureen.long@nerc.net

Standard Authorization Request Form

Title of Proposed Standard: Project 2007-17 — Transmission and Generation Protection System Maintenance and Testing
Request Date: May 7, 2007

SAR Requestor Information	**SAR Type** (*Check a box for each one that applies.*)	
Name: System Protection and Controls Task Force (Attachment A)	☐	New Standard
Primary Contact Charles Rogers	X	Revision to existing Standards: PRC-005-1 — Transmission and Generation Protection System Maintenance and Testing PRC-008-0 — Underfrequency Load Shedding Equipment Maintenance Programs PRC-011-0 — UVLS System Maintenance and Testing PRC-017-0 — Special Protection System Maintenance and Testing
Telephone (517) 788-0027 Fax (517) 788-0917	X	Withdrawal of existing Standard
E-mail cwrogers@cmsenergy.com	☐	Urgent Action

Purpose (Describe the purpose of the standard — what the standard will achieve in support of reliability.)

The purpose of standard PRC-005 should remain "To ensure all transmission and generation Protection Systems affecting the reliability of the Bulk Electric System (BES) are maintained and tested."

Industry Need (Provide a detailed statement justifying the need for the proposed standard, along with any supporting documentation.)

In Order 693, the Federal Energy Regulatory Commission directed that changes be made to these standards.

These standards should be consolidated into a single standard to reduce the costs of compliance and a number of technical short comings in these standards should be corrected to provide reliable performance when responding to abnormal system conditions.

Brief Description (Describe the proposed standard in sufficient detail to clearly define the scope in a manner that can be easily understood by others.)

Revise PRC-005-1 — Transmission and Generation Protection System Maintenance and Testing, to consolidate PRC-005-1, PRC-008-0 — Underfrequency Load Shedding Equipment Maintenance Programs; PRC-011-0 — UVLS System Maintenance and Testing; and PRC-017-0 — Special Protection System Maintenance and Testing into a single maintenance and testing standard. Standards PRC-008-0, PRC-011-0, and PRC-017-0 would then be withdrawn.

The revised PRC-005 standard should address the issues raised in the FERC Order 693 and the issues addressed in the SPCTF report "Assessment of PRC-005-1 – Transmission and Generation Protection System Maintenance and Testing; with implications for PRC-008-0, PRC-011-0, and PRC-017-0" – Attachment A to this SAR The revised standard should also address the comments submitted by stakeholders during the development of Version 0, and Phase III & IV and should reflect improvements identified in the Reliability Standards Review Guidelines – Attachment B to this SAR.

Detailed Description:

The PRC-005, 008, 011, and 017 reliability standards are intended to assure that Transmission & Generation Protection Systems are maintained and tested so as to provide reliable performance when responding to abnormal system conditions. It is the responsibility of the Transmission Owner, Generation Owner, and Distribution Provider to ensure the Transmission & Generation Protection Systems are maintained and tested in such a manner that the protective systems operate to fulfill their function.

Applicable to all four standards — The listed requirements do not provide clear and sufficient guidance concerning the maintenance and testing of the Protection Systems to achieve the commonly stated purpose which is "To ensure all transmission and generation Protection Systems affecting the reliability of the Bulk Electric System (BES) are maintained and tested."

- Applicable to PRC-017 — Part of the stated purpose in PRC-017 is: "To ensure that maintenance and testing programs are developed and misoperations are analyzed and corrected." The phrase "and misoperations are analyzed and corrected" is not clearly appropriate in a maintenance and testing standard. That is the purpose is more appropriate in PRC-003 and PRC-004, which relate to the analysis and mitigation of protection system misoperations. Analysis of correct operations or misoperations may be an integral part of condition-based maintenance processes, but need not be mandated in a maintenance standard.
- Applicable to all four standards — The standards should clearly state which power system elements are being addressed.
- Applicable to all four standards — The requirements should reflect the inherent differences between various protection system technologies.
- Applicable to all four standards — The terms "maintenance programs" and "testing programs" should be clearly defined in the glossary. The terms "maintenance" and "testing" are not interchangeable, and the requirements must be clear in their application. Additional terms may also have to be added to the glossary for clarity.
- Applicable to all four standards — The requirements of the existing standards, as stated, support time-based maintenance and testing, and should be expanded to include condition-based and performance-based maintenance and testing. The requirements for maintenance and testing procedures need to have more specificity to insure that the stated intent of the standards is met to support review by the compliance monitor.

The revised standard should also include the general improvements identified in the attached Reliability Standard Review Guidelines.

Reliability Functions

The Standard will Apply to the Following Functions *(Check box for each one that applies.)*		
☐	Reliability Coordinator	Responsible for the real-time operating reliability of its Reliability Coordinator Area in coordination with its neighboring Reliability Coordinator's wide area view.
☐	Balancing Authority	Integrates resource plans ahead of time, and maintains load-interchange-resource balance within a Balancing Authority Area and supports Interconnection frequency in real time.
☐	Interchange Authority	Ensures communication of interchange transactions for reliability evaluation purposes and coordinates implementation of valid and balanced interchange schedules between Balancing Authority Areas.
☐	Planning Coordinator	Assesses the longer-term reliability of its Planning Coordinator Area.
☐	Resource Planner	Develops a >one year plan for the resource adequacy of its specific loads within a Planning Coordinator area.
☐	Transmission Planner	Develops a >one year plan for the reliability of the interconnected Bulk Electric System within its portion of the Planning Coordinator area.
☐	Transmission Service Provider	Administers the transmission tariff and provides transmission services under applicable transmission service agreements (e.g., the pro forma tariff).
☒	Transmission Owner	Owns and maintains transmission facilities.
☐	Transmission Operator	Ensures the real-time operating reliability of the transmission assets within a Transmission Operator Area.
☒	Distribution Provider	Delivers electrical energy to the End-use customer.
☒	Generator Owner	Owns and maintains generation facilities.
☐	Generator Operator	Operates generation unit(s) to provide real and reactive power.
☐	Purchasing-Selling Entity	Purchases or sells energy, capacity, and necessary reliability-related services as required.
☐	Market Operator	Interface point for reliability functions with commercial functions.
☐	Load-Serving Entity	Secures energy and transmission service (and reliability-related services) to serve the End-use Customer.

Reliability and Market Interface Principles

Applicable Reliability Principles *(Check box for all that apply.)*	
☒	1. Interconnected bulk electric systems shall be planned and operated in a coordinated manner to perform reliably under normal and abnormal conditions as defined in the NERC Standards.
☒	2. The frequency and voltage of interconnected bulk electric systems shall be controlled within defined limits through the balancing of real and reactive power supply and demand.
☐	3. Information necessary for the planning and operation of interconnected bulk electric systems shall be made available to those entities responsible for planning and operating the systems reliably.
☒	4. Plans for emergency operation and system restoration of interconnected bulk electric systems shall be developed, coordinated, maintained and implemented.
☒	5. Facilities for communication, monitoring and control shall be provided, used and maintained for the reliability of interconnected bulk electric systems.
☐	6. Personnel responsible for planning and operating interconnected bulk electric systems shall be trained, qualified, and have the responsibility and authority to implement actions.
☒	7. The security of the interconnected bulk electric systems shall be assessed, monitored and maintained on a wide area basis.
☐	8. Bulk power systems shall be protected from malicious physical or cyber attacks.

Does the proposed Standard comply with all the following Market Interface Principles? *(Select "yes" or "no" from the drop-down box.)*
1. The planning and operation of bulk electric systems shall recognize that reliability is an essential requirement of a robust North American economy. Yes
2. An Organization Standard shall not give any market participant an unfair competitive advantage.Yes
3. An Organization Standard shall neither mandate nor prohibit any specific market structure. Yes
4. An Organization Standard shall not preclude market solutions to achieving compliance with that Standard. Yes
5. An Organization Standard shall not require the public disclosure of commercially sensitive information. All market participants shall have equal opportunity to access commercially non-sensitive information that is required for compliance with reliability standards. Yes

Related Standards

Standard No.	Explanation

Related SARs

SAR ID	Explanation

Regional Differences

Region	Explanation
ERCOT	None
FRCC	None
MRO	None
NPCC	None
SERC	None
RFC	None
SPP	None
WECC	None

SPCTF Roster

Charles W. Rogers
Chairman / RFC-ECAR Representative
Principal Engineer
Consumers Energy Co.

W. Mark Carpenter
Vice Chairman / ERCOT Representative
System Protection Manager
TXU Electric Delivery

John Mulhausen
FRCC Representative
Manager, Design and Standards
Florida Power & Light Co.

Joseph M. Burdis
ISO/RTO Representative
Senior Consultant / Engineer, Transmission
and Interconnection Planning
PJM Interconnection, L.L.C.

William J. Miller
RFC-MAIN Representative
Consulting Engineer
Exelon Corporation

Deven Bhan
MRO Representative
Electrical Engineer, System Protection
Western Area Power Administration

Philip Tatro
NPCC Representative
Consulting Engineer
National Grid USA

Philip B. Winston
SERC Representative
Manager, Protection and Control
Georgia Power Company

Dean Sikes
SPP Representative
Manager - Transmission Protection, Apparatus, & Metering
Cleco Power

David Angell
WECC Representative
T&D Planning Engineering Leader
Idaho Power Company

W. O. (Bill) Kennedy
Canada Member-at-Large
Principal
Kennedy & Associates Inc.

John L. Ciufo
Canada Member-at-Large
Manager Reliability Standards (P&C/Telecom)
Hydro One, Inc.

Jim Ingleson
ISO/RTO Representative
Senior Electric System Planning Engineer
New York Independent System Operator

Evan T. Sage
Investor Owned Utility
Senior Engineer
Potomac Electric Power Company

James D. Roberts
Federal
Transmission Planning
Tennessee Valley Authority

Tom Wiedman
NERC Consultant
Wiedman Power System Consulting Ltd.

Henry (Hank) Miller
RFC-ECAR Alternate
Principal Electrical Engineer
American Electric Power

Baj Agrawal
WECC Alternate
Principal Engineer
Arizona Public Service Company

Michael J. McDonald
Senior Principal Engineer, System Protection
Ameren Services Company

Jonathan Sykes
Senior Principal Engineer, System Protection
Salt River Project

Fred Ipock
Senior Engineer - Substations & Protection
City Utilities of Springfield, Missouri

W. O. (Bill) Kennedy
Canada Member-at-Large
Principal
b7kennedy & Associates Inc.

Bob Stuart
Director of Business Development, Principal
T&D Consultant
Elequant, Inc.

Standard Review Guidelines

Applicability
Does this reliability standard clearly identify the functional classes of entities responsible for complying with the reliability standard, with any specific additions or exceptions noted? Where multiple functional classes are identified is there a clear line of responsibility for each requirement identifying the functional class and entity to be held accountable for compliance? Does the requirement allow overlapping responsibilities between Registered Entities possibly creating confusion for who is ultimately accountable for compliance?

Does this reliability standard identify the geographic applicability of the standard, such as the entire North American bulk power system, an interconnection, or within a regional entity area? If no geographic limitations are identified, the default is that the standard applies throughout North America.

Does this reliability standard identify any limitations on the applicability of the standard based on electric facility characteristics, such as generators with a nameplate rating of 20 MW or greater, or transmission facilities energized at 200 kV or greater or some other criteria? If no functional entity limitations are identified, the default is that the standard applies to all identified functional entities.

Purpose
Does this reliability standard have a clear statement of purpose that describes how the standard contributes to the reliability of the bulk power system? Each purpose statement should include a value statement.

Performance Requirements
Does this reliability standard state one or more performance requirements, which if achieved by the applicable entities, will provide for a reliable bulk power system, consistent with good utility practices and the public interest?

Does each requirement identify who shall do what under what conditions and to what outcome?

Measurability
Is each performance requirement stated so as to be objectively measurable by a third party with knowledge or expertise in the area addressed by that requirement?

Does each performance requirement have one or more associated measures used to objectively evaluate compliance with the requirement?

If performance results can be practically measured quantitatively, are metrics provided within the requirement to indicate satisfactory performance?

Technical Basis in Engineering and Operations
Is this reliability standard based upon sound engineering and operating judgment, analysis, or experience, as determined by expert practitioners in that particular field?

Completeness
Is this reliability standard complete and self-contained? Does the standard depend on external information to determine the required level of performance?

Consequences for Noncompliance
In combination with guidelines for penalties and sanctions, as well as other ERO and regional entity compliance documents, are the consequences of violating a standard clearly known to the responsible entities?

Clear Language
Is the reliability standard stated using clear and unambiguous language? Can responsible entities, using reasonable judgment and in keeping with good utility practices, arrive at a consistent interpretation of the required performance?

Practicality
Does this reliability standard establish requirements that can be practically implemented by the assigned responsible entities within the specified effective date and thereafter?

Capability Requirements versus Performance Requirements
In general, requirements for entities to have 'capabilities' (this would include facilities for communication, agreements with other entities, etc.) should be located in the standards for certification. The certification requirements should indicate that entities have a responsibility to 'maintain' their capabilities.

Consistent Terminology
To the extent possible, does this reliability standard use a set of standard terms and definitions that are approved through the NERC reliability standards development process?

If the standard uses terms that are included in the NERC Glossary of Terms Used in Reliability Standards, then the term must be capitalized when it is used in the standard. New terms should not be added unless they have a 'unique' definition when used in a NERC reliability standard. Common terms that could be found in a college dictionary should not be defined and added to the NERC Glossary.

Are the verbs on the 'verb list' from the DT Guidelines? If not – do new verbs need to be added to the guidelines or could you use one of the verbs from the verb list?

Violation Risk Factors (Risk Factor)

High Risk Requirement

A requirement that, if violated, could directly cause or contribute to bulk electric system instability, separation, or a cascading sequence of failures, or could place the bulk electric system at an unacceptable risk of instability, separation, or cascading failures;

or a requirement in a planning time frame that, if violated, could, under emergency, abnormal, or restorative conditions anticipated by the preparations, directly cause or contribute to bulk electric system instability, separation, or a cascading sequence of failures, or could place the bulk electric system at an unacceptable risk of instability, separation, or cascading failures, or could hinder restoration to a normal condition.

Medium Risk Requirement

A requirement that, if violated, could directly affect the electrical state or the capability of the bulk electric system, or the ability to effectively monitor and control the bulk electric system. However, violation of a medium risk requirement is unlikely to lead to bulk electric system instability, separation, or cascading failures;

or a requirement in a planning time frame that, if violated, could, under emergency, abnormal, or restorative conditions anticipated by the preparations, directly and adversely affect the electrical state or capability of the bulk electric system, or the ability to effectively monitor, control, or restore the bulk electric system. However, violation of a medium risk requirement is unlikely, under emergency, abnormal, or restoration conditions anticipated by the preparations, to lead to bulk electric system instability, separation, or cascading failures, nor to hinder restoration to a normal condition.

Lower Risk Requirement

A requirement that, if violated, would not be expected to adversely affect the electrical state or capability of the bulk electric system, or the ability to effectively monitor and control the bulk electric system. A requirement that is administrative in nature;

or a requirement in a planning time frame that, if violated, would not, under the emergency, abnormal, or restorative conditions anticipated by the preparations, be expected to adversely affect the electrical state or capability of the bulk electric system, or the ability to effectively monitor, control, or restore the bulk electric system. A planning requirement that is administrative in nature.

Time Horizon

The drafting team should also indicate the time horizon available for mitigating a violation to the requirement using the following definitions:

- **Long-term Planning** — a planning horizon of one year or longer.
- **Operations Planning** — operating and resource plans from day-ahead up to and including seasonal.
- **Same-day Operations** — routine actions required within the timeframe of a day, but not real-time.
- **Real-time Operations** — actions required within one hour or less to preserve the reliability of the bulk electric system.
- **Operations Assessment** — follow-up evaluations and reporting of real time operations.

Violation Severity Levels

The drafting team should indicate a set of violation severity levels that can be applied for the requirements within a standard. ('Violation severity levels' replace existing 'levels of non-compliance.') The violation severity levels must be applied for each requirement and may be combined to cover multiple requirements, as long as it is clear which requirements are included and that all requirements are included.

The violation severity levels should be based on the following definitions:

- **Lower: mostly compliant with minor exceptions** — The responsible entity is mostly compliant with and meets the intent of the requirement but is deficient with respect to one or more minor details. Equivalent score: more than 95% but less than 100% compliant.
- **Moderate: mostly compliant with significant exceptions** — The responsible entity is mostly compliant with and meets the intent of the requirement but is deficient with respect to one or more significant elements. Equivalent score: more than 85% but less than or equal to 95% compliant.
- **High: marginal performance or results** — The responsible entity has only partially achieved the reliability objective of the requirement and is missing one or more significant elements. Equivalent score: more than 70% but less than or equal to 85% compliant.
- **Severe: poor performance or results** — The responsible entity has failed to meet the reliability objective of the requirement. Equivalent score: 70% or less compliant.

Compliance Monitor

Replace, 'Regional Reliability Organization' with 'Regional Entity'

Fill-in-the-blank Requirements

Do not include any 'fill-in-the-blank' requirements. These are requirements that assign one entity responsibility for developing some performance measures without requiring that the performance measures be included in the body of a standard – then require another entity to comply with those requirements.

Every reliability objective can be met, at least at a threshold level, by a North American standard. If we need regions to develop regional standards, such as in under-frequency load shedding, we can always write a uniform North American standard for the applicable functional entities as a means of encouraging development of the regional standards.

Requirements for Regional Reliability Organization

Do not write any requirements for the Regional Reliability Organization. Any requirements currently assigned to the RRO should be re-assigned to the applicable functional entity.

Effective Dates

Must be 1st day of 1st quarter after entities are expected to be compliant – must include time to provide notice to responsible entities of the obligation to comply. If the standard is to be actively monitored, time for the Compliance Monitoring and Enforcement Program to develop reporting instructions and modify the Compliance Data Management System(s) both at NERC and Regional Entities must be provided in the implementation plan. The effective date should be linked to the NERC BOT adoption date.

Associated Documents

If there are standards that are referenced within a standard, list the full name and number of the standard under the section called, 'Associated Documents'.

Functional Model Version 3

Review the requirements against the latest descriptions of the responsibilities and tasks assigned to functional entities as provided in pages 13 through 53 of the draft Functional Model Version 3.

NERC
NORTH AMERICAN ELECTRIC
RELIABILITY COUNCIL

NERC SPCTF Assessment of Standards:

- **PRC-005-1 — Transmission and Generation Protection System Maintenance and Testing**
- **PRC-008-0 — Underfrequency Load Shedding Equipment Maintenance Programs**
- **PRC-011-0 — UVLS System Maintenance and Testing**
- **PRC-017-0 — Special Protection System Maintenance and Testing**

DRAFT 1.0

March 8, 2007

A Technical Review of Standards

Prepared by the

System Protection and Controls Task Force

of the

NERC Planning Committee

Table of Contents

Introduction **2**

Executive Summary **2**

Assessment of PRC-005-1 ..... **3**

Purpose *3*

General Comments *3*

Applicability *4*

Requirements *4*

R1 4

R2 5

FERC Assessment of PRC-005-1, PRC-008-0, PRC-011-0, and PRC-017-0 ..... **5**

PRC-005-1 ..... *5*

PRC-008-0 ..... *6*

PRC-011-0 ..... *6*

PRC-017-0 ..... *7*

Other Activities Related to PRC-005-1, PRC-008-0, PRC-011-0, and PRC-017-0 ..... **7**

Conclusions and Recommendations **7**

Appendix A — System Protection and Control Task Force **8**

This report and its attendant Standards Authorization Request were approved by the Planning Committee on March 21, 2007, for forwarding to the Standards Committee.

Introduction

When the original scope for the System Protection and Control Task Force was developed, one of the assigned items was to review all of the existing PRC-series Reliability Standards, to advise the Planning Committee of our assessment, and to develop Standards Authorization Requests, as appropriate, to address any perceived deficiencies.

This report presents the SPCTF's assessment of PRC-005-1 – Transmission and Generation Protection System Maintenance and Testing. The report includes the SPCTF's understanding of the intent of this standard and contains specific observations relative to the existing standard.

The SPCTF sees the parallel intent for each of the PRC-005, PRC-008, PRC-011, and PRC-017 as being maintenance and testing standards for different protective systems. In fact, PRC-005 & PRC-008, and PRC-011 & PRC-017 have very similar format respectively. Since all protective relay systems require some means of maintenance and testing, it would seem that all protective system maintenance and testing could be included in one standard regardless of scheme type. The SPCTF recommends that these four standards be reduced to one standard covering the issues detailed for PRC-005 on maintenance and testing.

These four standards were developed primarily by translating the requirements of an earlier Phase I Planning Standard; thus they have not been previously subjected to a critical review of the Requirements.

Executive Summary

Reliability standards PRC-005, 008, 011, and 017 are intended to assure that Transmission & Generation Protection Systems are maintained and tested so as to provide reliable performance when responding to abnormal system conditions. It is the responsibility of the Transmission Owner, Generation Owner, and Distribution Provider to ensure the Transmission & Generation Protection Systems are maintained and tested in such a manner that the protective systems operate to fulfill their function.

Only PRC-005 will be commented on in detail although the other three standards have the same concerns.

SPCTF concluded that:

- Applicable to all four standards — The listed requirements do not provide clear and sufficient guidance concerning the maintenance and testing of the Protection Systems to achieve the commonly stated purpose which is "To ensure all transmission and generation Protection Systems affecting the reliability of the Bulk Electric System (BES) are maintained and tested."
- Applicable to PRC-017 — Part of the stated purpose in PRC-017 states: "To ensure that maintenance and testing programs are developed and misoperations are analyzed and corrected." The phrase "and misoperations are analyzed and corrected" is not clearly appropriate in a maintenance and testing standard. That is, the purpose is more appropriate in PRC-003 and PRC-004, which relate to the analysis and mitigation of protection system misoperations. Analysis of correct operations or misoperations may be an integral part of condition-based maintenance processes, but need not be mandated in a maintenance standard.
- Applicable to all four standards — The standards should clearly state which power system elements are being addressed.
- Applicable to all four standards — The requirements should reflect the inherent differences between different technologies of protection systems.

- Applicable to all four standards — The terms maintenance programs and testing programs should be clearly defined in the glossary. The terms "maintenance" and "testing" are not interchangeable, and the requirements must be clear in their application. Additional terms may also have to be added to the glossary for clarity.
- Applicable to all four standards — The requirements of the existing standards, as stated, support time-based maintenance and testing, and should be expanded to include condition-based and performance-based maintenance and testing. The R1.2 summary of maintenance and testing procedures needs to have some minimum defined sub-requirements to insure that the stated intent of the standards is met to support review by the compliance monitor.

Assessment of PRC-005-1

Purpose

To ensure all transmission and generation Protection Systems affecting the reliability of the Bulk Electric System (BES) are maintained and tested.

A review of PRC-005 indicates that this standard is intended to assure that all affected entities have adequate maintenance and testing programs for their Protection Systems to ensure reliability. SPCTF agrees with the Purpose statement of PRC-005-1.

General Comments

The SPCTF offers the following general comments:

- None of the requirements within PRC-005-1 specifically indicate what minimum attributes should be included in protective system maintenance and testing procedures.
- For interval-based procedures, no allowable maximum interval is prescribed.
- None of the requirements in the existing PRC-005-1 reflect condition-based or performance-based maintenance and testing criteria.

Standard PRC-005 should clarify that two goals are being covered:

- The maintenance portion should have requirements that keep the protection system equipment operating within manufacturers' design specification throughout the service life.
- The testing portion should have requirements that verify that the functional performance of the protection systems is consistent with the design intent throughout the service life.

Applicability

4.1.	Transmission Owners
4.2.	Generation Owners
4.3.	Distribution Providers that owns a transmission Protection System

Applicability 4.3 suggests that the definition of a Protection System in the Glossary of Terms should clarify how a Distribution Provider may be the owner of a transmission Protection System.

Requirements

R1

R1. Each Transmission Owner and any Distribution Provider that owns a transmission Protection System and each Generator Owner that owns a generation Protection System shall have a Protection System maintenance and testing program for Protection Systems that affect the reliability of the BES. The program shall include:

R1.1. Maintenance and testing intervals and their basis.

R1.2. Summary of maintenance and testing procedures.

The following clarifications should be made to Requirement R1:

1. How is the phrase "that affect the reliability of the BES" to be interpreted? The standard should clearly specify which Protection Systems are subject to the requirements.
2. The standard should clearly specify which components of the Generation Protection System are subject to the requirements.

The following clarifications should be made to Subparts R1.1 & R1.2:

1. Interval-based, condition-based, or performance-based maintenance and testing minimum criteria should be established within R1.1, including, but not limited to the following:
    a. For time-based maintenance and testing programs, maximum maintenance intervals should be specified.
    b. For condition-based or performance-based maintenance and testing programs, the program should have sufficient justification and documentation.
2. Definitions should be established for the terms "maintenance programs" and "testing programs."
3. A minimum set of attributes to be included in maintenance and testing programs should be established within R1.2.

R2

R2. Each Transmission Owner and any Distribution Provider that owns a transmission Protection System and each Generator Owner that owns a generation Protection System shall provide documentation of its Protection System maintenance and testing program and the implementation of that program to its Regional Reliability Organization on request (within 30 calendar days). The documentation of the program implementation shall include:

R2.1. Evidence Protection System devices were maintained and tested within the defined intervals.

R2.2. Date each Protection System device was last tested/maintained

The following clarification should be made to requirement R2:

- The appropriate entity should have their Protection System maintenance program and testing program and associated documentation, including maintenance records and testing records, available to its Regional Reliability Organization and NERC during audits or upon request within 30 days.

FERC Assessment of PRC-005-1, PRC-008-0, PRC-011-0, and PRC-017-0

In the October 20, 2006 Notice of Proposed Rulemaking for adoption of NERC Standards (Docket Number RM06-16-000), the Federal Energy Regulatory Commission commented on these four standards and proposed changes. The observations and proposals are excerpted from the NOPR and included below.

PRC-005-1

The Commission proposes to approve PRC-005-1 as mandatory and enforceable. In addition, we propose to direct that NERC develop modifications to the Reliability Standard as discussed below.

Proposed Reliability Standard PRC-005-1 does not specify the criteria to determine the appropriate maintenance intervals, nor do it specify maximum allowable maintenance intervals for the protections systems. The Commission therefore proposes that NERC include a requirement that maintenance and testing of these protection systems must be carried out within a maximum allowable interval that is appropriate to the type of the protection system and its impact on the reliability of the Bulk-Power System.

Accordingly, giving due weight to the technical expertise of the ERO and with the expectation that the Reliability Standard will accomplish the purpose represented to the Commission by the ERO and that it will improve the reliability of the nation's Bulk-Power System, the Commission proposes to approve Reliability Standard PRC-005-1 as mandatory and enforceable. In addition, pursuant to section 215(d)(5) of the FPA and § 39.5(f) of our regulations, the Commission proposes to direct that NERC submit a modification to PRC-005-1 that includes a requirement that maintenance and testing of a protection system must be carried out within a maximum allowable interval that is appropriate to the type of the protection system and its impact on the reliability of the Bulk-Power System.

PRC-008-0

The Commission notes that the commenters generally share staff's concern that the proposed Reliability Standard does not specify the criteria to determine the appropriate maintenance intervals, nor does it specify maximum allowable maintenance intervals for the protection systems. The Commission agrees and proposes to require NERC to modify the proposed Reliability Standard to include a requirement that maintenance and testing of UFLS programs must be carried out within a maximum allowable interval that is appropriate to the type of relay used and the impact on the reliability of the Bulk-Power System.

Accordingly, the Commission proposes to approve Reliability Standard PRC-008-0 as mandatory and enforceable. In addition, the Commission proposes to direct that NERC submit a modification to PRC-008-0 that includes a requirement that maintenance and testing of UFLS programs must be carried out within a maximum allowable interval appropriate to the relay type and the potential impact on the Bulk-Power System.

PRC-011-0

PRC-011-0 does not specify the criteria to determine the appropriate maintenance intervals, nor does it specify maximum allowable maintenance intervals for the protections systems. The Commission proposes that NERC include a Requirement that maintenance and testing of these UFLS programs must be carried out within a maximum allowable interval that is appropriate to the type of the relay used and the impact of these UFLS on the reliability of the Bulk-Power System.

The Commission believes that Reliability Standard PRC-011-0 serves an important purpose in requiring transmission owners and distribution providers to implement their UVLS equipment maintenance and testing programs. Further, the proposed Requirements are sufficiently clear and objective to provide guidance for compliance.

Accordingly, giving due weight to the technical expertise of the ERO and with the expectation that the Reliability Standard will accomplish the purpose represented to the Commission by the ERO and that it will improve the reliability of the nation's Bulk-Power System, the Commission proposes to approve Reliability Standard PRC-011-0 as mandatory and enforceable. In addition, pursuant to section 215(d)(5) of the FPA and § 39.5(f) of our regulations, the Commission proposes to direct that NERC submit a modification to PRC-011-0 that includes a requirement that maintenance and testing of UVLS programs must be carried out within a maximum allowable interval appropriate to the applicable relay and the impact on the reliability of the Bulk-Power System.

PRC-017-0

PRC-017-0 does not specify the criteria to determine the appropriate maintenance intervals, nor does it specify maximum allowable maintenance intervals for the protections systems. The Commission proposes to require NERC to include a requirement that maintenance and testing of these special protection system programs must be carried out within a maximum allowable interval that is appropriate to the type of relaying used and the impact of these special protection system programs on the reliability of the Bulk-Power System.

Accordingly, giving due weight to the technical expertise of the ERO and with the expectation that the Reliability Standard will accomplish the purpose represented to the Commission by the ERO and that it will improve the reliability of the nation's Bulk-Power System, the Commission proposes to approve Reliability Standard PRC-017-0 as mandatory and enforceable. In addition, pursuant to section 215(d)(5) of the FPA and § 39.5(f) of our regulations, the Commission proposes to direct that NERC submit a modification to PRC-017-0 that: (1) includes a requirement that maintenance and testing of these special protection system programs must be carried out within a maximum allowable interval that is appropriate to the type of relaying used; and (2) identifies the impact of these special protection system programs on the reliability of the Bulk-Power System.

Other Activities Related to PRC-005-1, PRC-008-0, PRC-011-0, and PRC-017-0

These four Standards are contained in several projects and draft SARs as part of the "Draft Reliability Standards Development Plan: 2007–2009", which was approved by the NERC Board of Trustees.

The SPCTF recommends that standards PRC-005-1, PRC-008-0, PRC-011-0, and PRC-017-0 be removed from the separate SARS in the Standards Development Plan, and that they be included in a new Standard Authorization Request for a single Protection System maintenance and testing standard.

Conclusions and Recommendations

PRC-005-1, PRC-008-0, PRC-011-0, and PRC-017-0 require additions, clarifications, and definitions to insure that the Protection Systems are properly maintained and tested.

The SPCTF recommends that standards PRC-005-1, PRC-008-0, PRC-011-0, and PRC-017-0 be removed from the separate SARS in the "Draft Reliability Standards Development Plan: 2007–2009," and that they be included in a new Standard Authorization Request for a single Protection System maintenance and testing standard.

SPCTF submits the attached SAR for that purpose of consolidating PRC-005-1, PRC-008-0, PRC-011-0, and PRC-017-0 into a single standard to the Planning Committee for endorsement.

Appendix A — System Protection and Control Task Force

Charles W. Rogers
Chairman / RFC-ECAR Representative
Principal Engineer
Consumers Energy Co.

W. Mark Carpenter
Vice Chairman / ERCOT Representative
System Protection Manager
TXU Electric Delivery

John Mulhausen
FRCC Representative
Manager, Design and Standards
Florida Power & Light Co.

Joseph M. Burdis
ISO/RTO Representative
Senior Consultant / Engineer, Transmission and Interconnection Planning
PJM Interconnection, L.L.C.

William J. Miller
RFC-MAIN Representative
Consulting Engineer
Exelon Corporation

Deven Bhan
MRO Representative
Electrical Engineer, System Protection
Western Area Power Administration

Philip Tatro
NPCC Representative
Consulting Engineer
National Grid USA

Philip B. Winston
SERC Representative
Manager, Protection and Control
Georgia Power Company

Dean Sikes
SPP Representative
Manager - Transmission Protection, Apparatus, & Metering
Cleco Power

David Angell
WECC Representative
T&D Planning Engineering Leader
Idaho Power Company

W. O. (Bill) Kennedy
Canada Member-at-Large
Principal
b7kennedy & Associates Inc.

John L. Ciufo
Canada Member-at-Large
Manager Reliability Standards (P&C/Telecom)
Hydro One, Inc.

Jim Ingleson
ISO/RTO Representative
Senior Electric System Planning Engineer
New York Independent System Operator

Evan T. Sage
Investor Owned Utility
Senior Engineer
Potomac Electric Power Company

James D. Roberts
Federal
Transmission Planning
Tennessee Valley Authority

Tom Wiedman
NERC Consultant
Wiedman Power System Consulting Ltd.

Henry (Hank) Miller
RFC-ECAR Alternate
Principal Electrical Engineer
American Electric Power

Baj Agrawal
WECC Alternate
Principal Engineer
Arizona Public Service Company

Michael J. McDonald
Senior Principal Engineer, System Protection
Ameren Services Company

Jonathan Sykes
Senior Principal Engineer, System Protection
Salt River Project

Fred Ipock
Senior Engineer - Substations & Protection
City Utilities of Springfield, Missouri

W. O. (Bill) Kennedy
Canada Member-at-Large
Principal
b7kennedy & Associates Inc.

Bob Stuart
Director of Business Development, Principal
T&D Consultant
Elequant, Inc.

Maureen E. Long
Standards Process Manager

June 11, 2007

TO: REGISTERED BALLOT BODY

Ladies and Gentlemen:

Announcement: Comment Periods Open

The Standards Committee (SC) announces the following standards actions:

SAR for System Protection Coordination (Project 2007-06) Posted for 30-day Comment Period June 11–July 10, 2007

The SAR for Project 2007-06 — System Protection Coordination proposes to address the FERC directives in Order 693 and to address a number of technical shortcomings identified by stakeholders and the System Protection and Control Task Force and to bring the standard into conformance with the "Standard Review Guidelines."

The purpose of the proposed standard is to assure that protection system application and performance issues are coordinated among all related entities. Please use this comment form to submit comments on this SAR.

SAR for Protection System Maintenance & Testing (Project 2007-17) Posted for 30-day Comment Period June 11–July 10, 2007

This SAR for Project 2007-17 — Protection System Maintenance and Testing proposes to merge the requirements from the following standards into a single standard to reduce the costs of compliance while also improving efficiencies:

- PRC-005-1 — Transmission and Generation Protection System Maintenance and Testing
- PRC-008-0 — Underfrequency Load Shedding Equipment Maintenance Programs
- PRC-011-0 — UVLS System Maintenance and Testing
- PRC-017-0 — Special Protection System Maintenance and Testing

The SAR also proposes to address the FERC directives in Order 693 and to address a number of technical shortcomings identified by stakeholders and the System Protection and Control Task Force and to bring the standard into conformance with the "Standard Review Guidelines."

The purpose of the proposed standard is to ensure all transmission and generation protection systems affecting the reliability of the bulk power system are maintained and tested to support reliable operation performance when responding to abnormal system conditions. Please use this comment form to submit comments on this SAR.

Standards Development Process

The *Reliability Standards Development Procedure* contains all the procedures governing the standards development process. The success of the NERC standards development process depends on stakeholder participation. We extend our thanks to all those who participate. If you have any questions, please contact me at 813-468-5998 or maureen.long@nerc.net.

Sincerely,

Maureen E. Long

cc: Registered Ballot Body Registered Users
Standards Mailing List
NERC Roster

Comment Form — First Draft of SAR for Project 2007-17 — Protection System Maintenance and Testing

Please use this form to submit comments on the proposed SAR for Project 2007-17 — Protection System Maintenance and Testing. Comments must be submitted by **July 10, 2007**. You may submit the completed form by e-mail to sarcomm@nerc.net with the words "Protection Maintenance" in the subject line. If you have questions please contact Al Calafiore at al.calafiore@nerc.net or by telephone at 609-452-8060.

Individual Commenter Information **(Complete this page for comments from one organization or individual.)**		
Name:		
Organization:		
Telephone:		
E-mail:		
NERC Region		**Registered Ballot Body Segment**
☐ **ERCOT**	☐	1 — Transmission Owners
☐ **FRCC**	☐	2 — RTOs and ISOs
☐ **MRO**	☐	3 — Load-serving Entities
☐ **NPCC**	☐	4 — Transmission-dependent Utilities
☐ **RFC**	☐	5 — Electric Generators
☐ **SERC**	☐	6 — Electricity Brokers, Aggregators, and Marketers
☐ **SPP**	☐	7 — Large Electricity End Users
☐ **WECC**	☐	8 — Small Electricity End Users
☐ **NA – Not Applicable**	☐	9 — Federal, State, Provincial Regulatory or other Government Entities
	☐	10 — Regional Reliability Organizations and Regional Entities

Group Comments (Complete this page if comments are from a group.)

Group Name:

Lead Contact:

Contact Organization:

Contact Segment:

Contact Telephone:

Contact E-mail:

Additional Member Name	Additional Member Organization	Region*	Segment*

*If more than one Region or Segment applies, indicate the best fit for the purpose of these comments. Regional acronyms and segment numbers are shown on prior page.

Background Information

This SAR proposes to merge the requirements from the following standards into a single standard to reduce the costs of compliance while also improving efficiencies:

- PRC-005-1 — Transmission and Generation Protection System Maintenance and Testing
- PRC-008-0 — Underfrequency Load Shedding Equipment Maintenance Programs
- PRC-011-0 — UVLS System Maintenance and Testing
- PRC-017-0 — Special Protection System Maintenance and Testing

The SAR also proposes to address the FERC directives in Order 693 and to address a number of technical short comings identified by stakeholders and the System Protection and Control Task Force and to bring the standard into conformance with the "Standard Review Guidelines." The goal is to provide a set of requirements that will support reliable performance when responding to abnormal system conditions.

Please review the SAR and then answer the questions on the following page. Please e-mail your comments on this form to sarcomm@nerc.net with the subject "Protection Maintenance SAR" by **July 10, 2007**.

You do not have to answer all questions. Enter All Comments in Simple Text Format.

Insert a "check" mark in the appropriate boxes by double-clicking the gray areas.

1. Do you agree that there is a reliability-related need to improve the requirements in this set of standards?

   ☐ Yes

   ☐ No

   Comments:

2. Do you agree with the proposed scope of this SAR?

   ☐ Yes

   ☐ No

   Comments:

3. Do you agree with the applicability of the proposed SAR (Transmission Owners, Generator Owners and Distribution Providers - Distribution Providers may own the devices that must be tested and maintained)?

   ☐ Yes

   ☐ No

   Comments:

4. If you know of a Regional Variance that should be developed as part of this SAR, please identify that for us. If not, please explain in the comment area.

   Regional Variance:
   Comments:

5. If you are aware of a Business Practice that needs to be developed to support the proposed SAR, please identify that for us.

   Business Practice:
   Comments:

6. If you have any other comments on this SAR that you haven't provided above, please provide them here.

   Comments:

Please use this form to submit comments on the proposed SAR for Project 2007-17 — Protection System Maintenance and Testing. Comments must be submitted by **July 10, 2007**. You may submit the completed form by e-mail to sarcomm@nerc.net with the words "Protection Maintenance" in the subject line. If you have questions please contact Al Calafiore at al.calafiore@nerc.net or by telephone at 609-452-8060.

Individual Commenter Information **(Complete this page for comments from one organization or individual.)**		
Name:	Thad K. Ness	
Organization:	American Electric Power (AEP)	
Telephone:	614-716-2053	
E-mail:	tkness@aep.com	
NERC Region		**Registered Ballot Body Segment**
☒ **ERCOT**	☒	1 — Transmission Owners
☐ **FRCC**	☐	2 — RTOs and ISOs
☐ **MRO**	☐	3 — Load-serving Entities
☐ **NPCC**	☐	4 — Transmission-dependent Utilities
☒ **RFC**	☒	5 — Electric Generators
☐ **SERC**	☒	6 — Electricity Brokers, Aggregators, and Marketers
☒ **SPP**	☐	7 — Large Electricity End Users
☐ **WECC**	☐	8 — Small Electricity End Users
☐ **NA – Not Applicable**	☐	9 — Federal, State, Provincial Regulatory or other Government Entities
	☐	10 — Regional Reliability Organizations and Regional Entities

Group Comments (Complete this page if comments are from a group.)

Group Name:

Lead Contact:

Contact Organization:

Contact Segment:

Contact Telephone:

Contact E-mail:

Additional Member Name	Additional Member Organization	Region*	Segment*

*If more than one Region or Segment applies, indicate the best fit for the purpose of these comments. Regional acronyms and segment numbers are shown on prior page.

Background Information

This SAR proposes to merge the requirements from the following standards into a single standard to reduce the costs of compliance while also improving efficiencies:

- PRC-005-1 — Transmission and Generation Protection System Maintenance and Testing
- PRC-008-0 — Underfrequency Load Shedding Equipment Maintenance Programs
- PRC-011-0 — UVLS System Maintenance and Testing
- PRC-017-0 — Special Protection System Maintenance and Testing

The SAR also proposes to address the FERC directives in Order 693 and to address a number of technical short comings identified by stakeholders and the System Protection and Control Task Force and to bring the standard into conformance with the "Standard Review Guidelines." The goal is to provide a set of requirements that will support reliable performance when responding to abnormal system conditions.

Please review the SAR and then answer the questions on the following page. Please e-mail your comments on this form to sarcomm@nerc.net with the subject "Protection Maintenance SAR" by **July 10, 2007**.

You do not have to answer all questions. Enter All Comments in Simple Text Format.

Insert a "check" mark in the appropriate boxes by double-clicking the gray areas.

1. Do you agree that there is a reliability-related need to improve the requirements in this set of standards?

   ☐ Yes

   ☒ No

   Comments: AEP has not had an event, due to deficiencies in protection maintenance, in it's long existence that jeopardized the reliability or availability of Bulk Power transfers. Simply combining multiple standards into one, does nothing for improving reliability.

2. Do you agree with the proposed scope of this SAR?

   ☐ Yes

   ☒ No

   Comments: On the surface, the premise of reducing costs and improving efficiencies by combining multiple standards sounds excellent. Having to only keep up with one standard instead of four will not generate significant savings due to the fact that the maintenance will still have to be performed. But what lies hidden, is the fact that prescribed maximum allowable maintenance intervals will result from the revisions. They may require more frequent testing to be performed. Is there evidence that increasing the interval frequency results in a measurable increase in reliability and availability? Development of prescribed maximum intervals that are vastly different than the utility's existing practices may actual increase their O&M costs and reduce efficiencies.

   The function of the protective system needs to be taken into account. The purpose of the line protection is very different than the purpose of UFLS/UVLS and SPS's. The UFLS program is there as the last line of defense against a decaying system after all other measures have failed. The combination of all the different relaying systems places them on equal ground. Shouldn't the reliability and dependablilty for one be more important than the others?

3. Do you agree with the applicability of the proposed SAR (Transmission Owners, Generator Owners and Distribution Providers - Distribution Providers may own the devices that must be tested and maintained)?

   ☒ Yes

   ☐ No

   Comments:

4. If you know of a Regional Variance that should be developed as part of this SAR, please identify that for us. If not, please explain in the comment area.

Regional Variance: None
Comments: None

5. If you are aware of a Business Practice that needs to be developed to support the proposed SAR, please identify that for us.

   Business Practice: Possibly
   Comments: AEP and other utilities, with many years of experience serving customers and supporting the electric grid, have voluntarily integrated maintenance and testing programs into the core of their work practices and processes. AEP fully supports improvements if they truly foster reliability and availability benefits to bulk power transfers. More Standards, Requirements and Business Practices are not always better. If Standards create burdens on a utility's physical resources and budgets, then some mechanism must be available to allow for the needed changes.

6. If you have any other comments on this SAR that you haven't provided above, please provide them here.

   Comments: The standard should not use the term Bulk Electric System, but should instead specify a voltage threshold for impacts to bulk system transfers - specifically; 'Facilites operated 200 kV and above and Regionally-defined, Operationally Significant facilities operated greater than 100 kv, but less than 199 kV'. The term 'affects' also needs to be clarified. Inclusion of all facilities greater than 100 kV does not benefit the reliability of national bulk power transfers. For example, the loss or misoperation of a 138 kV line serving a localized load center would not be detremental to bulk power transfers multiple busses away.

Comment Form — First Draft of SAR for Project 2007-17 — Protection System Maintenance and Testing

Please use this form to submit comments on the proposed SAR for Project 2007-17 — Protection System Maintenance and Testing. Comments must be submitted by **July 10, 2007**. You may submit the completed form by e-mail to sarcomm@nerc.net with the words "Protection Maintenance" in the subject line. If you have questions please contact Al Calafiore at al.calafiore@nerc.net or by telephone at 609-452-8060.

Individual Commenter Information **(Complete this page for comments from one organization or individual.)**		
Name:	Dean Bender	
Organization:	Bonneville Power Administration	
Telephone:	(360) 418-2040	
E-mail:	dabender@bpa.gov	
NERC Region		**Registered Ballot Body Segment**
☐ **ERCOT**	☒	1 — Transmission Owners
☐ **FRCC**	☐	2 — RTOs and ISOs
☐ **MRO**	☒	3 — Load-serving Entities
☐ **NPCC**	☐	4 — Transmission-dependent Utilities
☐ **RFC**	☒	5 — Electric Generators
☐ **SERC**	☒	6 — Electricity Brokers, Aggregators, and Marketers
☐ **SPP**	☐	7 — Large Electricity End Users
☒ **WECC**	☐	8 — Small Electricity End Users
☐ **NA – Not Applicable**	☐	9 — Federal, State, Provincial Regulatory or other Government Entities
	☐	10 — Regional Reliability Organizations and Regional Entities

Group Comments (Complete this page if comments are from a group.)

Group Name:

Lead Contact:

Contact Organization:

Contact Segment:

Contact Telephone:

Contact E-mail:

Additional Member Name	Additional Member Organization	Region*	Segment*

*If more than one Region or Segment applies, indicate the best fit for the purpose of these comments. Regional acronyms and segment numbers are shown on prior page.

Background Information

This SAR proposes to merge the requirements from the following standards into a single standard to reduce the costs of compliance while also improving efficiencies:

- PRC-005-1 — Transmission and Generation Protection System Maintenance and Testing
- PRC-008-0 — Underfrequency Load Shedding Equipment Maintenance Programs
- PRC-011-0 — UVLS System Maintenance and Testing
- PRC-017-0 — Special Protection System Maintenance and Testing

The SAR also proposes to address the FERC directives in Order 693 and to address a number of technical short comings identified by stakeholders and the System Protection and Control Task Force and to bring the standard into conformance with the "Standard Review Guidelines." The goal is to provide a set of requirements that will support reliable performance when responding to abnormal system conditions.

Please review the SAR and then answer the questions on the following page. Please e-mail your comments on this form to sarcomm@nerc.net with the subject "Protection Maintenance SAR" by **July 10, 2007**.

You do not have to answer all questions. Enter All Comments in Simple Text Format.

Insert a "check" mark in the appropriate boxes by double-clicking the gray areas.

1. Do you agree that there is a reliability-related need to improve the requirements in this set of standards?

   ☒ Yes

   ☐ No

   Comments:

2. Do you agree with the proposed scope of this SAR?

   ☒ Yes

   ☐ No

   Comments:

3. Do you agree with the applicability of the proposed SAR (Transmission Owners, Generator Owners and Distribution Providers - Distribution Providers may own the devices that must be tested and maintained)?

   ☒ Yes

   ☐ No

   Comments:

4. If you know of a Regional Variance that should be developed as part of this SAR, please identify that for us. If not, please explain in the comment area.

   Regional Variance:
   Comments: No known regional variance

5. If you are aware of a Business Practice that needs to be developed to support the proposed SAR, please identify that for us.

   Business Practice:
   Comments:

6. If you have any other comments on this SAR that you haven't provided above, please provide them here.

   Comments: In the "Detailed Description" section of the SAR, it states:
   "Part of the stated purpose in PRC-017 is: "To ensure that maintenance and testing programs are developed and misoperations are analyzed and corrected." The phrase "and misoperations are analyzed and corrected" is not clearly appropriate in a maintenance and testing standard. That is the purpose is more appropriate in PRC-003

and PRC-004, which relate to the analysis and mitigation of protection system misoperations. Analysis of correct operations or misoperations may be an integral part of condition-based maintenance processes, but need not be mandated in a maintenance standard."

The analysis of SPS misoperations is handled in PRC-016 (SPS Misoperations) and PRC 012 (SPS review Procedure) not in PRC-003 or PRC-004. Therefore, if the phrase is removed from PRC-017, it does not need to be added to PRC-003 or PRC-004.

Comment Form — First Draft of SAR for Project 2007-17 — Protection System Maintenance and Testing

Please use this form to submit comments on the proposed SAR for Project 2007-17 — Protection System Maintenance and Testing. Comments must be submitted by **July 10, 2007**. You may submit the completed form by e-mail to sarcomm@nerc.net with the words "Protection Maintenance" in the subject line. If you have questions please contact Al Calafiore at al.calafiore@nerc.net or by telephone at 609-452-8060.

Individual Commenter Information **(Complete this page for comments from one organization or individual.)**		
Name:	Nancy C. Denton	
Organization:	Consumers Energy Company	
Telephone:	517-788-1310	
E-mail:	ncdenton@cmsenergy.com	
NERC Region		**Registered Ballot Body Segment**
☐ **ERCOT**	☐	1 — Transmission Owners
☐ **FRCC**	☐	2 — RTOs and ISOs
☐ **MRO**	☒	3 — Load-serving Entities
☐ **NPCC**	☒	4 — Transmission-dependent Utilities
☒ **RFC**	☐	5 — Electric Generators
☐ **SERC**	☐	6 — Electricity Brokers, Aggregators, and Marketers
☐ **SPP**	☐	7 — Large Electricity End Users
☐ **WECC**	☐	8 — Small Electricity End Users
☐ **NA – Not Applicable**	☐	9 — Federal, State, Provincial Regulatory or other Government Entities
	☐	10 — Regional Reliability Organizations and Regional Entities

Group Comments (Complete this page if comments are from a group.)

Group Name:

Lead Contact:

Contact Organization:

Contact Segment:

Contact Telephone:

Contact E-mail:

Additional Member Name	Additional Member Organization	Region*	Segment*

*If more than one Region or Segment applies, indicate the best fit for the purpose of these comments. Regional acronyms and segment numbers are shown on prior page.

Background Information

This SAR proposes to merge the requirements from the following standards into a single standard to reduce the costs of compliance while also improving efficiencies:

- PRC-005-1 — Transmission and Generation Protection System Maintenance and Testing
- PRC-008-0 — Underfrequency Load Shedding Equipment Maintenance Programs
- PRC-011-0 — UVLS System Maintenance and Testing
- PRC-017-0 — Special Protection System Maintenance and Testing

The SAR also proposes to address the FERC directives in Order 693 and to address a number of technical short comings identified by stakeholders and the System Protection and Control Task Force and to bring the standard into conformance with the "Standard Review Guidelines." The goal is to provide a set of requirements that will support reliable performance when responding to abnormal system conditions.

Please review the SAR and then answer the questions on the following page. Please e-mail your comments on this form to sarcomm@nerc.net with the subject "Protection Maintenance SAR" by **July 10, 2007**.

You do not have to answer all questions. Enter All Comments in Simple Text Format.

Insert a "check" mark in the appropriate boxes by double-clicking the gray areas.

1. Do you agree that there is a reliability-related need to improve the requirements in this set of standards?

   ☒ Yes

   ☐ No

   Comments:

2. Do you agree with the proposed scope of this SAR?

   ☒ Yes

   ☐ No

   Comments:

3. Do you agree with the applicability of the proposed SAR (Transmission Owners, Generator Owners and Distribution Providers - Distribution Providers may own the devices that must be tested and maintained)?

   ☒ Yes

   ☐ No

   Comments:

4. If you know of a Regional Variance that should be developed as part of this SAR, please identify that for us. If not, please explain in the comment area.

   Regional Variance: N/A
   Comments:

5. If you are aware of a Business Practice that needs to be developed to support the proposed SAR, please identify that for us.

   Business Practice: N/A
   Comments:

6. If you have any other comments on this SAR that you haven't provided above, please provide them here.

   Comments: None.

Comment Form — First Draft of SAR for Project 2007-17 — Protection System Maintenance and Testing

Please use this form to submit comments on the proposed SAR for Project 2007-17 — Protection System Maintenance and Testing. Comments must be submitted by **July 10, 2007**. You may submit the completed form by e-mail to sarcomm@nerc.net with the words "Protection Maintenance" in the subject line. If you have questions please contact Al Calafiore at al.calafiore@nerc.net or by telephone at 609-452-8060.

Individual Commenter Information **(Complete this page for comments from one organization or individual.)**		
Name:	Greg Rowland	
Organization:	Duke Energy	
Telephone:	704-382-5348	
E-mail:	gdrowlan@duke-energy.com	
NERC Region		**Registered Ballot Body Segment**
☐ **ERCOT**	☒	1 — Transmission Owners
☐ **FRCC**	☐	2 — RTOs and ISOs
☐ **MRO**	☒	3 — Load-serving Entities
☐ **NPCC**	☐	4 — Transmission-dependent Utilities
☒ **RFC**	☐	5 — Electric Generators
☒ **SERC**	☐	6 — Electricity Brokers, Aggregators, and Marketers
☐ **SPP**	☐	7 — Large Electricity End Users
☐ **WECC**	☐	8 — Small Electricity End Users
☐ **NA – Not Applicable**	☐	9 — Federal, State, Provincial Regulatory or other Government Entities
	☐	10 — Regional Reliability Organizations and Regional Entities

Group Comments (Complete this page if comments are from a group.)

Group Name:

Lead Contact:

Contact Organization:

Contact Segment:

Contact Telephone:

Contact E-mail:

Additional Member Name	Additional Member Organization	Region*	Segment*

*If more than one Region or Segment applies, indicate the best fit for the purpose of these comments. Regional acronyms and segment numbers are shown on prior page.

Background Information

This SAR proposes to merge the requirements from the following standards into a single standard to reduce the costs of compliance while also improving efficiencies:

- PRC-005-1 — Transmission and Generation Protection System Maintenance and Testing
- PRC-008-0 — Underfrequency Load Shedding Equipment Maintenance Programs
- PRC-011-0 — UVLS System Maintenance and Testing
- PRC-017-0 — Special Protection System Maintenance and Testing

The SAR also proposes to address the FERC directives in Order 693 and to address a number of technical short comings identified by stakeholders and the System Protection and Control Task Force and to bring the standard into conformance with the "Standard Review Guidelines." The goal is to provide a set of requirements that will support reliable performance when responding to abnormal system conditions.

Please review the SAR and then answer the questions on the following page. Please e-mail your comments on this form to sarcomm@nerc.net with the subject "Protection Maintenance SAR" by **July 10, 2007**.

You do not have to answer all questions. Enter All Comments in Simple Text Format.

Insert a "check" mark in the appropriate boxes by double-clicking the gray areas.

1. Do you agree that there is a reliability-related need to improve the requirements in this set of standards?

   ☒ Yes

   ☐ No

   Comments:

2. Do you agree with the proposed scope of this SAR?

   ☐ Yes

   ☒ No

   Comments: Combining PRC-005, 008, 011 and 017 into one new standard does not seem to be the best approach. Duke Energy does not have UVLS systems or Special Protection Systems. Furthermore, Duke Energy's Underfrequency Load Shedding system is on the transmission system in the Carolinas, but on the distribution system in the Midwest. Combining these standards would likely create confusion and compliance issues for us and others as well. Also, combining the standards is unlikely to result in simplification, as different requirements associated with the different protection systems could have different Violation Risk Factors and levels of non-compliance, which would necessitate keeping them separate in the combined standard, which would defeat the purpose of combining them in the first place.

3. Do you agree with the applicability of the proposed SAR (Transmission Owners, Generator Owners and Distribution Providers - Distribution Providers may own the devices that must be tested and maintained)?

   ☒ Yes

   ☐ No

   Comments:

4. If you know of a Regional Variance that should be developed as part of this SAR, please identify that for us. If not, please explain in the comment area.

   Regional Variance:
   Comments:

5. If you are aware of a Business Practice that needs to be developed to support the proposed SAR, please identify that for us.

   Business Practice:

Comments:

6. If you have any other comments on this SAR that you haven't provided above, please provide them here.

   Comments:

Comment Form — First Draft of SAR for Project 2007-17 — Protection System Maintenance and Testing

Please use this form to submit comments on the proposed SAR for Project 2007-17 — Protection System Maintenance and Testing. Comments must be submitted by **July 10, 2007**. You may submit the completed form by e-mail to sarcomm@nerc.net with the words "Protection Maintenance" in the subject line. If you have questions please contact Al Calafiore at al.calafiore@nerc.net or by telephone at 609-452-8060.

Individual Commenter Information **(Complete this page for comments from one organization or individual.)**		
Name:	Doug Hohlbaugh	
Organization:	FirstEnergy	
Telephone:	330-384-4698	
E-mail:	hohlbaughdg@firstenergycorp.com	
NERC Region		**Registered Ballot Body Segment**
☐ **ERCOT**	☒	1 — Transmission Owners
☐ **FRCC**	☐	2 — RTOs and ISOs
☐ **MRO**	☒	3 — Load-serving Entities
☐ **NPCC**	☐	4 — Transmission-dependent Utilities
☒ **RFC**	☒	5 — Electric Generators
☐ **SERC**	☒	6 — Electricity Brokers, Aggregators, and Marketers
☐ **SPP**	☐	7 — Large Electricity End Users
☐ **WECC**	☐	8 — Small Electricity End Users
☐ **NA – Not Applicable**	☐	9 — Federal, State, Provincial Regulatory or other Government Entities
	☐	10 — Regional Reliability Organizations and Regional Entities

Group Comments (Complete this page if comments are from a group.)

Group Name: FirstEnergy Corp

Lead Contact: Doug Hohlbaugh

Contact Organization:

Contact Segment:

Contact Telephone: 330-384-4698

Contact E-mail: hohlbaughdg@firstenergycorp.com

Additional Member Name	Additional Member Organization	Region*	Segment*
Craig Boyle	FE, Tranmission Substation Maintenance	RFC	1
Ken Dresner	FE, Fossil Generation	RFC	5
Bill Duge	FE, Nuclear Generation	RFC	5
Dave Powell	FE, Transmission Planning & Protection	RFC	1
Jeff Mackauer	FE, Transmission Planning & Protection	RFC	1

*If more than one Region or Segment applies, indicate the best fit for the purpose of these comments. Regional acronyms and segment numbers are shown on prior page.

Background Information

This SAR proposes to merge the requirements from the following standards into a single standard to reduce the costs of compliance while also improving efficiencies:

- PRC-005-1 — Transmission and Generation Protection System Maintenance and Testing
- PRC-008-0 — Underfrequency Load Shedding Equipment Maintenance Programs
- PRC-011-0 — UVLS System Maintenance and Testing
- PRC-017-0 — Special Protection System Maintenance and Testing

The SAR also proposes to address the FERC directives in Order 693 and to address a number of technical short comings identified by stakeholders and the System Protection and Control Task Force and to bring the standard into conformance with the "Standard Review Guidelines." The goal is to provide a set of requirements that will support reliable performance when responding to abnormal system conditions.

Please review the SAR and then answer the questions on the following page. Please e-mail your comments on this form to sarcomm@nerc.net with the subject "Protection Maintenance SAR" by **July 10, 2007**.

You do not have to answer all questions. Enter All Comments in Simple Text Format.

Insert a "check" mark in the appropriate boxes by double-clicking the gray areas.

1. Do you agree that there is a reliability-related need to improve the requirements in this set of standards?

   ☒ Yes

   ☐ No

   Comments:

2. Do you agree with the proposed scope of this SAR?

   ☒ Yes

   ☐ No

   Comments: Bullet #5 of the "Detailed Description" on page SAR-2 indicates the following:

   "Applicable to all four standards — The requirements of the existing standards, as stated, support time-based maintenance and testing, and should be expanded to include condition-based and performance-based maintenance and testing. The requirements for maintenance and testing procedures need to have more specificity to insure that the stated intent of the standards is met to support review by the compliance monitor."

   FE supports the scope of the SAR to consider adding the ability for condition-based and performanced based testing, as suggested by the System Protection and Control Task Force. Additionally, the SDT should consider the need to perform some level of preventative maintenance on a periodic basis at an established maximum interval length, that would vary per the equipment being maintained. The interval established would be based on established guidelines from vendors, EPRI, industry experts, etc.

3. Do you agree with the applicability of the proposed SAR (Transmission Owners, Generator Owners and Distribution Providers - Distribution Providers may own the devices that must be tested and maintained)?

   ☒ Yes

   ☐ No

   Comments: The inclusion of the Distribution Provider is generally needed for UFLS and UVLS relays. The confusion that previously existed in PRC-005 by including the DP entity should be mitigated by the proposed consolidation of the four maintenance standards.

4. If you know of a Regional Variance that should be developed as part of this SAR, please identify that for us. If not, please explain in the comment area.

Regional Variance:
Comments: Not aware of any.

5. If you are aware of a Business Practice that needs to be developed to support the proposed SAR, please identify that for us.

   Business Practice:
   Comments: Not aware of any

6. If you have any other comments on this SAR that you haven't provided above, please provide them here.

   Comments: None.

Comment Form — First Draft of SAR for Project 2007-17 — Protection System Maintenance and Testing

Please use this form to submit comments on the proposed SAR for Project 2007-17 — Protection System Maintenance and Testing. Comments must be submitted by **July 10, 2007**. You may submit the completed form by e-mail to sarcomm@nerc.net with the words "Protection Maintenance" in the subject line. If you have questions please contact Al Calafiore at al.calafiore@nerc.net or by telephone at 609-452-8060.

Individual Commenter Information **(Complete this page for comments from one organization or individual.)**		
Name:		
Organization:		
Telephone:		
E-mail:		
NERC Region		**Registered Ballot Body Segment**
☐ **ERCOT**	☐	1 — Transmission Owners
☐ **FRCC**	☐	2 — RTOs and ISOs
☐ **MRO**	☐	3 — Load-serving Entities
☐ **NPCC**	☐	4 — Transmission-dependent Utilities
☐ **RFC**	☐	5 — Electric Generators
☐ **SERC**	☐	6 — Electricity Brokers, Aggregators, and Marketers
☐ **SPP**	☐	7 — Large Electricity End Users
☐ **WECC**	☐	8 — Small Electricity End Users
☐ **NA – Not Applicable**	☐	9 — Federal, State, Provincial Regulatory or other Government Entities
	☐	10 — Regional Reliability Organizations and Regional Entities

Group Comments (Complete this page if comments are from a group.)

Group Name: FRCC

Lead Contact: Eric Senkowicz

Contact Organization: FRCC

Contact Segment: 10

Contact Telephone: 813-207-7980

Contact E-mail: esenkowicz@frcc.com

Additional Member Name	Additional Member Organization	Region*	Segment*
Alan Gale	City of Tallahassee	FRCC	5

*If more than one Region or Segment applies, indicate the best fit for the purpose of these comments. Regional acronyms and segment numbers are shown on prior page.

Background Information

This SAR proposes to merge the requirements from the following standards into a single standard to reduce the costs of compliance while also improving efficiencies:

- PRC-005-1 — Transmission and Generation Protection System Maintenance and Testing
- PRC-008-0 — Underfrequency Load Shedding Equipment Maintenance Programs
- PRC-011-0 — UVLS System Maintenance and Testing
- PRC-017-0 — Special Protection System Maintenance and Testing

The SAR also proposes to address the FERC directives in Order 693 and to address a number of technical short comings identified by stakeholders and the System Protection and Control Task Force and to bring the standard into conformance with the "Standard Review Guidelines." The goal is to provide a set of requirements that will support reliable performance when responding to abnormal system conditions.

Please review the SAR and then answer the questions on the following page. Please e-mail your comments on this form to sarcomm@nerc.net with the subject "Protection Maintenance SAR" by **July 10, 2007**.

You do not have to answer all questions. Enter All Comments in Simple Text Format.

Insert a "check" mark in the appropriate boxes by double-clicking the gray areas.

1. Do you agree that there is a reliability-related need to improve the requirements in this set of standards?

   ☒ Yes

   ☐ No

   Comments: Centralizing System Protection equipment maintenance and testing requirements in a single standard will add clarity, minimize synchronization issues across standards, help provide consistent terminology and improve understanding of system protection standards.

2. Do you agree with the proposed scope of this SAR?

   ☒ Yes

   ☒ No

   Comments: Use of subject matter experts (NERC SPCTF) along with the NERC Planning Committee review of the assessment is an effective and efficient way to supplement project SARs and provides critical input at the front-end of the standards process.

   Attachment A is described as the SPCTF assessment, but attachment A to the SAR is the SPCTF roster. The assessment referenced in the scope of the SAR should include "Draft 1.0" if the full assessment is not included as part of the SAR.

3. Do you agree with the applicability of the proposed SAR (Transmission Owners, Generator Owners and Distribution Providers - Distribution Providers may own the devices that must be tested and maintained)?

   ☐ Yes

   ☐ No

   Comments: This question may be better addressed as the standards are integrated.

4. If you know of a Regional Variance that should be developed as part of this SAR, please identify that for us. If not, please explain in the comment area.

   Regional Variance:
   Comments:

5. If you are aware of a Business Practice that needs to be developed to support the proposed SAR, please identify that for us.

   Business Practice:

Comments:

6. If you have any other comments on this SAR that you haven't provided above, please provide them here.

   Comments: There are many standards being addressed (Disturbance Monitoring, System Protection Coordination, Reliability Coordination, along with Regional standard developments). As these standards are integrated into PRC-005, the existing and new terminology should be consistently applied in all system protection standards (with respect to defined terms). Where terms are undefined or being revised, the drafting team should carefully consider the terms used to ensure coordination of revised or new definitions with other Reliability standards or flag conflicts within the implementation plan.

Please use this form to submit comments on the proposed SAR for Project 2007-17 — Protection System Maintenance and Testing. Comments must be submitted by **July 10, 2007**. You may submit the completed form by e-mail to sarcomm@nerc.net with the words "Protection Maintenance" in the subject line. If you have questions please contact Al Calafiore at al.calafiore@nerc.net or by telephone at 609-452-8060.

Individual Commenter Information **(Complete this page for comments from one organization or individual.)**		
Name:	Roger Champagne	
Organization:	Hydro-Québec TransÉnergie	
Telephone:	514 289-2211, X 2766	
E-mail:	champagne.roger.2@hydro.qc.ca	
NERC Region		**Registered Ballot Body Segment**
☐ **ERCOT**	☒	1 — Transmission Owners
☐ **FRCC**	☐	2 — RTOs and ISOs
☐ **MRO**	☐	3 — Load-serving Entities
☒ **NPCC**	☐	4 — Transmission-dependent Utilities
☐ **RFC**	☐	5 — Electric Generators
☐ **SERC**	☐	6 — Electricity Brokers, Aggregators, and Marketers
☐ **SPP**	☐	7 — Large Electricity End Users
☐ **WECC**	☐	8 — Small Electricity End Users
☐ **NA – Not Applicable**	☐	9 — Federal, State, Provincial Regulatory or other Government Entities
	☐	10 — Regional Reliability Organizations and Regional Entities

Group Comments (Complete this page if comments are from a group.)

Group Name:

Lead Contact:

Contact Organization:

Contact Segment:

Contact Telephone:

Contact E-mail:

Additional Member Name	Additional Member Organization	Region*	Segment*

*If more than one Region or Segment applies, indicate the best fit for the purpose of these comments. Regional acronyms and segment numbers are shown on prior page.

Background Information

This SAR proposes to merge the requirements from the following standards into a single standard to reduce the costs of compliance while also improving efficiencies:

- PRC-005-1 — Transmission and Generation Protection System Maintenance and Testing
- PRC-008-0 — Underfrequency Load Shedding Equipment Maintenance Programs
- PRC-011-0 — UVLS System Maintenance and Testing
- PRC-017-0 — Special Protection System Maintenance and Testing

The SAR also proposes to address the FERC directives in Order 693 and to address a number of technical short comings identified by stakeholders and the System Protection and Control Task Force and to bring the standard into conformance with the "Standard Review Guidelines." The goal is to provide a set of requirements that will support reliable performance when responding to abnormal system conditions.

Please review the SAR and then answer the questions on the following page. Please e-mail your comments on this form to sarcomm@nerc.net with the subject "Protection Maintenance SAR" by **July 10, 2007**.

You do not have to answer all questions. Enter All Comments in Simple Text Format.

Insert a "check" mark in the appropriate boxes by double-clicking the gray areas.

1. Do you agree that there is a reliability-related need to improve the requirements in this set of standards?

   ☒ Yes

   ☐ No

   Comments:

2. Do you agree with the proposed scope of this SAR?

   ☒ Yes

   ☐ No

   Comments:

3. Do you agree with the applicability of the proposed SAR (Transmission Owners, Generator Owners and Distribution Providers - Distribution Providers may own the devices that must be tested and maintained)?

   ☒ Yes

   ☒ No

   Comments: Each requirement needs to specifically address what protection systems need to comply with the standard - i.e. a generator not connected to the BPS with under frequency trip relay should only be subject to under frequency relay maintenance requirements

4. If you know of a Regional Variance that should be developed as part of this SAR, please identify that for us. If not, please explain in the comment area.

   Regional Variance: None
   Comments:

5. If you are aware of a Business Practice that needs to be developed to support the proposed SAR, please identify that for us.

   Business Practice:
   Comments: none that we know of

6. If you have any other comments on this SAR that you haven't provided above, please provide them here.

   Comments: Due consideration should be given to potential difficulties in obtaining required outages. System reliability concerns may preclude performing maintenance at

the intervals required. Certain unavoidable delays like the inability to schedule outages for reliability reasons, labor disputes, or force-majeure conditions could affect testing period requirements. These factors should be considered and certain latitude needs to be provided, with "appropriate" approvals, for delays in the testing process.

There is need to specify which types of relays will be covered by the new standard. The SAR Team needs to focus on better defining the Generator Protection Schemes ("GPS") that would be subject to this Standard – i.e., what subset of GPS are critical to bulk power system operation, as distinct from generator operation. For example, typically there is no single generating unit that would, if a contingency event occurs on that generating unit, result in significant adverse impacts outside of the local area in which the single generating unit is located. As a result, if these NERC Standards are to apply to all NERC-registered Generators, only a subset of the GPS need to be subjected to the maintenance testing intervals.

Comment Form — First Draft of SAR for Project 2007-17 — Protection System Maintenance and Testing

Please use this form to submit comments on the proposed SAR for Project 2007-17 — Protection System Maintenance and Testing. Comments must be submitted by **July 10, 2007**. You may submit the completed form by e-mail to sarcomm@nerc.net with the words "Protection Maintenance" in the subject line. If you have questions please contact Al Calafiore at al.calafiore@nerc.net or by telephone at 609-452-8060.

Individual Commenter Information **(Complete this page for comments from one organization or individual.)**		
Name:	Ron Falsetti	
Organization:	IESO	
Telephone:	905-855-6187	
E-mail:	ron.falsetti@ieso.ca	
NERC Region		**Registered Ballot Body Segment**
☐ **ERCOT**	☐	1 — Transmission Owners
☐ **FRCC**	☒	2 — RTOs and ISOs
☐ **MRO**	☐	3 — Load-serving Entities
☒ **NPCC**	☐	4 — Transmission-dependent Utilities
☐ **RFC**	☐	5 — Electric Generators
☐ **SERC**	☐	6 — Electricity Brokers, Aggregators, and Marketers
☐ **SPP**	☐	7 — Large Electricity End Users
☐ **WECC**	☐	8 — Small Electricity End Users
☐ **NA – Not Applicable**	☐	9 — Federal, State, Provincial Regulatory or other Government Entities
	☐	10 — Regional Reliability Organizations and Regional Entities

Group Comments (Complete this page if comments are from a group.)

Group Name:

Lead Contact:

Contact Organization:

Contact Segment:

Contact Telephone:

Contact E-mail:

Additional Member Name	Additional Member Organization	Region*	Segment*

*If more than one Region or Segment applies, indicate the best fit for the purpose of these comments. Regional acronyms and segment numbers are shown on prior page.

Background Information

This SAR proposes to merge the requirements from the following standards into a single standard to reduce the costs of compliance while also improving efficiencies:

- PRC-005-1 — Transmission and Generation Protection System Maintenance and Testing
- PRC-008-0 — Underfrequency Load Shedding Equipment Maintenance Programs
- PRC-011-0 — UVLS System Maintenance and Testing
- PRC-017-0 — Special Protection System Maintenance and Testing

The SAR also proposes to address the FERC directives in Order 693 and to address a number of technical short comings identified by stakeholders and the System Protection and Control Task Force and to bring the standard into conformance with the "Standard Review Guidelines." The goal is to provide a set of requirements that will support reliable performance when responding to abnormal system conditions.

Please review the SAR and then answer the questions on the following page. Please e-mail your comments on this form to sarcomm@nerc.net with the subject "Protection Maintenance SAR" by **July 10, 2007**.

You do not have to answer all questions. Enter All Comments in Simple Text Format.

Insert a "check" mark in the appropriate boxes by double-clicking the gray areas.

1. Do you agree that there is a reliability-related need to improve the requirements in this set of standards?

   ☒ Yes

   ☐ No

   Comments:

2. Do you agree with the proposed scope of this SAR?

   ☒ Yes

   ☐ No

   Comments:

3. Do you agree with the applicability of the proposed SAR (Transmission Owners, Generator Owners and Distribution Providers - Distribution Providers may own the devices that must be tested and maintained)?

   ☒ Yes

   ☐ No

   Comments:

4. If you know of a Regional Variance that should be developed as part of this SAR, please identify that for us. If not, please explain in the comment area.

   Regional Variance:
   Comments:

5. If you are aware of a Business Practice that needs to be developed to support the proposed SAR, please identify that for us.

   Business Practice:
   Comments:

6. If you have any other comments on this SAR that you haven't provided above, please provide them here.

   Comments:

   1. The IESO commends NERC, the SDT and the SPCTF for providing clarity and for efforts to reduce the costs of compliance.

2 In the Standard PRC-008-0, Generation Owners were not included in the applicable entities. Generation Owners may have underfrequency tripping devices for protection of their units. Hence, it would be appropriate to include these devices for maintenance and testing requirements also.

3. There is need to specify which types of relays will be covered by the new standard. The SAR Team needs to focus on better defining the Generator Protection Schemes ("GPS") that are critical to bulk power system operation, as distinct from generator operation. For example, a single generating unit may experience contingency events that would not result in any significant adverse impacts outside the local area in which the single generating unit is located. As a result, there remains a need to subject those GPSs that are important to the Bulk Power System, such as generator underfrequency trip settings, to the maintenance testing intervals to be derived in these standards.

4. Certain unavoidable delays like the inability to schedule outages for reliability reasons, labor disputes, or force-majeure conditions could affect testing period requirements. These factors should be considered and certain latitude needs to be provided for delays in the testing process.

5. However, the SAR team needs to also consider, as part of its scope, assurance that the asset owner has taken all appropriate steps to ensure that required outages are appropriately planned, can be reasonably accommodated, and approved by the TOP or RC.

Comment Form — First Draft of SAR for Project 2007-17 — Protection System Maintenance and Testing

Please use this form to submit comments on the proposed SAR for Project 2007-17 — Protection System Maintenance and Testing. Comments must be submitted by **July 10, 2007**. You may submit the completed form by e-mail to sarcomm@nerc.net with the words "Protection Maintenance" in the subject line. If you have questions please contact Al Calafiore at al.calafiore@nerc.net or by telephone at 609-452-8060.

Individual Commenter Information **(Complete this page for comments from one organization or individual.)**		
Name:	Tony Clark	
Organization:	Manitoba Hydro	
Telephone:	204-487-5478	
E-mail:	tclark@hydro.mb.ca	
NERC Region		**Registered Ballot Body Segment**
☐ **ERCOT**	☒	1 — Transmission Owners
☐ **FRCC**	☐	2 — RTOs and ISOs
☒ **MRO**	☒	3 — Load-serving Entities
☐ **NPCC**	☐	4 — Transmission-dependent Utilities
☐ **RFC**	☒	5 — Electric Generators
☐ **SERC**	☒	6 — Electricity Brokers, Aggregators, and Marketers
☐ **SPP**	☐	7 — Large Electricity End Users
☐ **WECC**	☐	8 — Small Electricity End Users
☐ **NA – Not Applicable**	☐	9 — Federal, State, Provincial Regulatory or other Government Entities
	☐	10 — Regional Reliability Organizations and Regional Entities

Group Comments (Complete this page if comments are from a group.)

Group Name:

Lead Contact:

Contact Organization:

Contact Segment:

Contact Telephone:

Contact E-mail:

Additional Member Name	Additional Member Organization	Region*	Segment*

*If more than one Region or Segment applies, indicate the best fit for the purpose of these comments. Regional acronyms and segment numbers are shown on prior page.

Background Information

This SAR proposes to merge the requirements from the following standards into a single standard to reduce the costs of compliance while also improving efficiencies:

- PRC-005-1 — Transmission and Generation Protection System Maintenance and Testing
- PRC-008-0 — Underfrequency Load Shedding Equipment Maintenance Programs
- PRC-011-0 — UVLS System Maintenance and Testing
- PRC-017-0 — Special Protection System Maintenance and Testing

The SAR also proposes to address the FERC directives in Order 693 and to address a number of technical short comings identified by stakeholders and the System Protection and Control Task Force and to bring the standard into conformance with the "Standard Review Guidelines." The goal is to provide a set of requirements that will support reliable performance when responding to abnormal system conditions.

Please review the SAR and then answer the questions on the following page. Please e-mail your comments on this form to sarcomm@nerc.net with the subject "Protection Maintenance SAR" by **July 10, 2007**.

You do not have to answer all questions. Enter All Comments in Simple Text Format.

Insert a "check" mark in the appropriate boxes by double-clicking the gray areas.

1. Do you agree that there is a reliability-related need to improve the requirements in this set of standards?

   ☐ Yes

   ☒ No

   Comments: There is a need to better define and explain the terms "maintenance" and "testing" as they relate to this standard. Also a tighter definition as to which systems are considered to affect the BES is required. The need to improve the standard is driven by the administration of the standard rather than reliability.

2. Do you agree with the proposed scope of this SAR?

   ☐ Yes

   ☒ No

   Comments: We disagree that there is a need to change the standard to include more specificity for maintenance and test procedures. We also disagree with mandating minimum maintenance intervals for protection system equipment.

3. Do you agree with the applicability of the proposed SAR (Transmission Owners, Generator Owners and Distribution Providers - Distribution Providers may own the devices that must be tested and maintained)?

   ☐ Yes

   ☐ No

   Comments:

4. If you know of a Regional Variance that should be developed as part of this SAR, please identify that for us. If not, please explain in the comment area.

   Regional Variance:
   Comments:

5. If you are aware of a Business Practice that needs to be developed to support the proposed SAR, please identify that for us.

   Business Practice:
   Comments:

6. If you have any other comments on this SAR that you haven't provided above, please provide them here.

Comments: Manitoba Hydro takes exception to the prescriptive nature of the proposed changes to the maintenace procedures and maintenance intervals. The type of maintenance performed and the minimum maintenance intervals should be determined by the utility within the operating context of the protection system. There is no need for the standard to reflect the inherent difference between various protection system technologies as the utility would account for differences within their stated maintenance practices.

Comment Form — First Draft of SAR for Project 2007-17 — Protection System Maintenance and Testing

Please use this form to submit comments on the proposed SAR for Project 2007-17 — Protection System Maintenance and Testing. Comments must be submitted by **July 10, 2007**. You may submit the completed form by e-mail to sarcomm@nerc.net with the words "Protection Maintenance" in the subject line. If you have questions please contact Al Calafiore at al.calafiore@nerc.net or by telephone at 609-452-8060.

Individual Commenter Information **(Complete this page for comments from one organization or individual.)**		
Name:		
Organization:		
Telephone:		
E-mail:		
NERC Region		**Registered Ballot Body Segment**
☐ **ERCOT**	☐	1 — Transmission Owners
☐ **FRCC**	☐	2 — RTOs and ISOs
☐ **MRO**	☐	3 — Load-serving Entities
☐ **NPCC**	☐	4 — Transmission-dependent Utilities
☐ **RFC**	☐	5 — Electric Generators
☐ **SERC**	☐	6 — Electricity Brokers, Aggregators, and Marketers
☐ **SPP**	☐	7 — Large Electricity End Users
☐ **WECC**	☐	8 — Small Electricity End Users
☐ **NA – Not Applicable**	☐	9 — Federal, State, Provincial Regulatory or other Government Entities
	☐	10 — Regional Reliability Organizations and Regional Entities

Group Comments (Complete this page if comments are from a group.)

Group Name: Midwest Reliability Organization (MRO)

Lead Contact: Joe Knight

Contact Organization: MRO for Group (GRE - for lead contact)

Contact Segment: 10

Contact Telephone: 763.241.5633

Contact E-mail: jknight@grenergy.com

Additional Member Name	Additional Member Organization	Region*	Segment*
Neal Balu	WPS	MRO	10
Terry Bilke	MISO	MRO	10
Robert Coish, Chair	MHEB	MRO	10
Carol Gerou	MP	MRO	10
Ken Goldsmith	ALT	MRO	10
Jim Haigh	WAPA	MRO	10
Tom Mielnik	MEC	MRO	10
Pam Oreschnick	XEL	MRO	10
Dave Rudolph	BEPC	MRO	10
Eric Ruskamp	LES	MRO	10
Mike Brytowski, Secretary	MRO	MRO	10
28 Additional Members	Not Named Above	MRO	10

*If more than one Region or Segment applies, indicate the best fit for the purpose of these comments. Regional acronyms and segment numbers are shown on prior page.

Background Information

This SAR proposes to merge the requirements from the following standards into a single standard to reduce the costs of compliance while also improving efficiencies:

- PRC-005-1 — Transmission and Generation Protection System Maintenance and Testing
- PRC-008-0 — Underfrequency Load Shedding Equipment Maintenance Programs
- PRC-011-0 — UVLS System Maintenance and Testing
- PRC-017-0 — Special Protection System Maintenance and Testing

The SAR also proposes to address the FERC directives in Order 693 and to address a number of technical short comings identified by stakeholders and the System Protection and Control Task Force and to bring the standard into conformance with the "Standard Review Guidelines." The goal is to provide a set of requirements that will support reliable performance when responding to abnormal system conditions.

Please review the SAR and then answer the questions on the following page. Please e-mail your comments on this form to sarcomm@nerc.net with the subject "Protection Maintenance SAR" by **July 10, 2007**.

You do not have to answer all questions. Enter All Comments in Simple Text Format.

Insert a "check" mark in the appropriate boxes by double-clicking the gray areas.

1. Do you agree that there is a reliability-related need to improve the requirements in this set of standards?

   ☒ Yes

   ☐ No

   Comments:

2. Do you agree with the proposed scope of this SAR?

   ☒ Yes

   ☐ No

   Comments:

3. Do you agree with the applicability of the proposed SAR (Transmission Owners, Generator Owners and Distribution Providers - Distribution Providers may own the devices that must be tested and maintained)?

   ☐ Yes

   ☒ No

   Comments: FERC Order 693 in both paragraph 1466 and in footnote 384, indicates that in some areas of the country, Load Serving Entities (LSE) and Transmission Operators (TOP) may individually or jointly own and operate a protection system. Thus, these additional entities should be subject to the resulting consolidated standard. The MRO believes that the following caveat should be added to the LSE where it is listed as an Applicable Entity, (where operation of the protection system can affect the Bulk Electric System).
   2. The MRO requests that the SDT review whether or not the Reliability Coordinator (RC) should be added to the list of Applicable Entities given their wide area view-for example, the RC may need to be involved in determining which protection systems below 100kV will affect the BES.

4. If you know of a Regional Variance that should be developed as part of this SAR, please identify that for us. If not, please explain in the comment area.

   Regional Variance: None
   Comments:

5. If you are aware of a Business Practice that needs to be developed to support the proposed SAR, please identify that for us.

   Business Practice: None

Comments:

6. If you have any other comments on this SAR that you haven't provided above, please provide them here.

   Comments:
   1. The MRO commends NERC and the SDT for taking steps to remove some of the redundancy that currently exists among many of the standards today. The consolidation of the protection system maintenance and testing standards is a good first step.
   2. The MRO requests that the following be considered during the initial drafting of the Requirements for this new protection and maintenance standard. A minimum set of evidence to be included in a maintenance and testing program should be established in the measures for R1.2.
   3. In the SPCTF Assessment of PRC-005-1, PRC-008-0, PRC-011-0, and PRC-017-0, the clarification for R2 states that documentation is available to its Regional Reliability Organization and NERC during audits or upon request within 30 days but paragraph 1545 of FERC Order 693 states "be routinely provided to the ERO or Regional Entity and not only when it is requested." The MRO believes that the FERC request would be satisfied if the standard were to state: "the applicable entities shall provide testing records to the Regional Entity on a periodic basis e.g. (annually).
   4. In the event that the SAR DT does not become the SDT, the MRO requests that these comments be forwarded on to the group that will do tha actual drafting of the Standard.

Comment Form — First Draft of SAR for Project 2007-17 — Protection System Maintenance and Testing

Please use this form to submit comments on the proposed SAR for Project 2007-17 — Protection System Maintenance and Testing. Comments must be submitted by **July 10, 2007**. You may submit the completed form by e-mail to sarcomm@nerc.net with the words "Protection Maintenance" in the subject line. If you have questions please contact Al Calafiore at al.calafiore@nerc.net or by telephone at 609-452-8060.

Individual Commenter Information **(Complete this page for comments from one organization or individual.)**		
Name:		
Organization:		
Telephone:		
E-mail:		
NERC Region		**Registered Ballot Body Segment**
☐ **ERCOT**	☐	1 — Transmission Owners
☐ **FRCC**	☐	2 — RTOs and ISOs
☐ **MRO**	☐	3 — Load-serving Entities
☒ **NPCC**	☐	4 — Transmission-dependent Utilities
☐ **RFC**	☐	5 — Electric Generators
☐ **SERC**	☐	6 — Electricity Brokers, Aggregators, and Marketers
☐ **SPP**	☐	7 — Large Electricity End Users
☐ **WECC**	☐	8 — Small Electricity End Users
☐ **NA – Not Applicable**	☐	9 — Federal, State, Provincial Regulatory or other Government Entities
	☒	10 — Regional Reliability Organizations and Regional Entities

Group Comments (Complete this page if comments are from a group.)

Group Name: NPCC, CP9 Reliabiity Standards Working Group

Lead Contact: Guy V. Zito

Contact Organization: Northeast Power Coordinating Council

Contact Segment: 10

Contact Telephone: 212-840-1070

Contact E-mail: gzito@npcc.org

Additional Member Name	Additional Member Organization	Region*	Segment*
Ralph Rufrano	New York Power Authority	NPCC	1
Kathleen Goodman	ISO-New England	NPCC	2
Greg Campoli	New York ISO	NPCC	2
Donald Nelson	MADPU	NPCC	9
David Kiguel	Hydro One Networks	NPCC	1
Ron Falsetti	The IESO	NPCC	2
Roger Champagne	TransEnergie HydroQuebec	NPCC	1
Murale Gopinathan	Northeast Utilities	NPCC	1
Michael Gildea	Constellation Energy	NPCC	6
Glen McCartney	Constellation Energy	NPCC	6
Al Adamson	New York State Reliability Council	NPCC	10
Michael Shiavone	National Grid US	NPCC	1
Guy V. Zito	NPCC	NPCC	10
Bill Shemley	ISO-New England	NPCC	2

*If more than one Region or Segment applies, indicate the best fit for the purpose of these comments. Regional acronyms and segment numbers are shown on prior page.

Background Information

This SAR proposes to merge the requirements from the following standards into a single standard to reduce the costs of compliance while also improving efficiencies:

- PRC-005-1 — Transmission and Generation Protection System Maintenance and Testing
- PRC-008-0 — Underfrequency Load Shedding Equipment Maintenance Programs
- PRC-011-0 — UVLS System Maintenance and Testing
- PRC-017-0 — Special Protection System Maintenance and Testing

The SAR also proposes to address the FERC directives in Order 693 and to address a number of technical short comings identified by stakeholders and the System Protection and Control Task Force and to bring the standard into conformance with the "Standard Review Guidelines." The goal is to provide a set of requirements that will support reliable performance when responding to abnormal system conditions.

Please review the SAR and then answer the questions on the following page. Please e-mail your comments on this form to sarcomm@nerc.net with the subject "Protection Maintenance SAR" by **July 10, 2007**.

You do not have to answer all questions. Enter All Comments in Simple Text Format.

Insert a "check" mark in the appropriate boxes by double-clicking the gray areas.

1. Do you agree that there is a reliability-related need to improve the requirements in this set of standards?

   ☒ Yes

   ☐ No

   Comments:

2. Do you agree with the proposed scope of this SAR?

   ☒ Yes

   ☐ No

   Comments:

3. Do you agree with the applicability of the proposed SAR (Transmission Owners, Generator Owners and Distribution Providers - Distribution Providers may own the devices that must be tested and maintained)?

   ☒ Yes

   ☒ No

   Comments: Each requirement needs to specifically address what protection systems need to comply with the standard - i.e. a generator not connected to the BPS with under frequency trip relay should only be subject to under frequency relay maintenance requirements

4. If you know of a Regional Variance that should be developed as part of this SAR, please identify that for us. If not, please explain in the comment area.

   Regional Variance: None
   Comments: Certain unavoidable delays like the inability to schedule outages for reliability reasons or labor disputes, or force-majeure conditions could affect testing period requirements. These factors should be considered and certain latitude, with the "appropriate approvals", needs to be provided for delays in the testing process.

5. If you are aware of a Business Practice that needs to be developed to support the proposed SAR, please identify that for us.

   Business Practice:
   Comments: none that we know of

6. If you have any other comments on this SAR that you haven't provided above, please provide them here.

   Comments: Due consideration should be given to potential difficulties in obtaining required outages. System reliability concerns may preclude performing maintenance at the intervals required. Certain unavoidable delays like the inability to schedule outages for reliability reasons, labor disputes, or force-majeure conditions could affect testing period requirements. These factors should be considered and certain latitude needs to be provided, with "appropriate" approvals, for delays in the testing process.

   There is need to specify which types of relays will be covered by the new standard. The SAR Team needs to focus on better defining the Generator Protection Schemes ("GPS") that would be subject to this Standard – i.e., what subset of GPS are critical to bulk power system operation, as distinct from generator operation. For example, typically there is no single generating unit that would, if a contingency event occurs on that generating unit, result in significant adverse impacts outside of the local area in which the single generating unit is located. As a result, if these NERC Standards are to apply to all NERC-registered Generators, only a subset of the GPS need to be subjected to the maintenance testing intervals.

Comment Form — First Draft of SAR for Project 2007-17 — Protection System Maintenance and Testing

Please use this form to submit comments on the proposed SAR for Project 2007-17 — Protection System Maintenance and Testing. Comments must be submitted by **July 10, 2007**. You may submit the completed form by e-mail to sarcomm@nerc.net with the words "Protection Maintenance" in the subject line. If you have questions please contact Al Calafiore at al.calafiore@nerc.net or by telephone at 609-452-8060.

Individual Commenter Information **(Complete this page for comments from one organization or individual.)**		
Name:		
Organization:		
Telephone:		
E-mail:		
NERC Region		**Registered Ballot Body Segment**
☐ **ERCOT**	☐	1 — Transmission Owners
☐ **FRCC**	☐	2 — RTOs and ISOs
☐ **MRO**	☐	3 — Load-serving Entities
☐ **NPCC**	☐	4 — Transmission-dependent Utilities
☐ **RFC**	☐	5 — Electric Generators
☐ **SERC**	☐	6 — Electricity Brokers, Aggregators, and Marketers
☐ **SPP**	☐	7 — Large Electricity End Users
☐ **WECC**	☐	8 — Small Electricity End Users
☐ **NA – Not Applicable**	☐	9 — Federal, State, Provincial Regulatory or other Government Entities
	☐	10 — Regional Reliability Organizations and Regional Entities

Group Comments (Complete this page if comments are from a group.)

Group Name: Pepco Holdings, Inc. - Affiliates

Lead Contact: Richard Kafka

Contact Organization: Pepco Holdings, Inc.

Contact Segment: 1

Contact Telephone: 301-469-5274

Contact E-mail: rjkafka@pepcoholdings.com

Additional Member Name	Additional Member Organization	Region*	Segment*
Carl Kinsley	Delmarva Power & Light	RFC	1
Alvin Depew	Potomac Electric Power Company	RFC	1
Evan Sage	Potomac Electric Power Company	RFC	1

*If more than one Region or Segment applies, indicate the best fit for the purpose of these comments. Regional acronyms and segment numbers are shown on prior page.

Background Information

This SAR proposes to merge the requirements from the following standards into a single standard to reduce the costs of compliance while also improving efficiencies:

- PRC-005-1 — Transmission and Generation Protection System Maintenance and Testing
- PRC-008-0 — Underfrequency Load Shedding Equipment Maintenance Programs
- PRC-011-0 — UVLS System Maintenance and Testing
- PRC-017-0 — Special Protection System Maintenance and Testing

The SAR also proposes to address the FERC directives in Order 693 and to address a number of technical short comings identified by stakeholders and the System Protection and Control Task Force and to bring the standard into conformance with the "Standard Review Guidelines." The goal is to provide a set of requirements that will support reliable performance when responding to abnormal system conditions.

Please review the SAR and then answer the questions on the following page. Please e-mail your comments on this form to sarcomm@nerc.net with the subject "Protection Maintenance SAR" by **July 10, 2007**.

You do not have to answer all questions. Enter All Comments in Simple Text Format.

Insert a "check" mark in the appropriate boxes by double-clicking the gray areas.

1. Do you agree that there is a reliability-related need to improve the requirements in this set of standards?

   ☒ Yes

   ☐ No

   Comments:

2. Do you agree with the proposed scope of this SAR?

   ☒ Yes

   ☐ No

   Comments:

3. Do you agree with the applicability of the proposed SAR (Transmission Owners, Generator Owners and Distribution Providers - Distribution Providers may own the devices that must be tested and maintained)?

   ☒ Yes

   ☐ No

   Comments:

4. If you know of a Regional Variance that should be developed as part of this SAR, please identify that for us. If not, please explain in the comment area.

   Regional Variance:
   Comments:

5. If you are aware of a Business Practice that needs to be developed to support the proposed SAR, please identify that for us.

   Business Practice:
   Comments:

6. If you have any other comments on this SAR that you haven't provided above, please provide them here.

   Comments: This SAR will bring needed coherence to what are now several related standards.

Comment Form — First Draft of SAR for Project 2007-17 — Protection System Maintenance and Testing

Please use this form to submit comments on the proposed SAR for Project 2007-17 — Protection System Maintenance and Testing. Comments must be submitted by **July 10, 2007**. You may submit the completed form by e-mail to sarcomm@nerc.net with the words "Protection Maintenance" in the subject line. If you have questions please contact Al Calafiore at al.calafiore@nerc.net or by telephone at 609-452-8060.

Individual Commenter Information **(Complete this page for comments from one organization or individual.)**		
Name:		
Organization:		
Telephone:		
E-mail:		
NERC Region		**Registered Ballot Body Segment**
☐ **ERCOT**	☐	1 — Transmission Owners
☐ **FRCC**	☐	2 — RTOs and ISOs
☐ **MRO**	☐	3 — Load-serving Entities
☐ **NPCC**	☐	4 — Transmission-dependent Utilities
☐ **RFC**	☐	5 — Electric Generators
☐ **SERC**	☐	6 — Electricity Brokers, Aggregators, and Marketers
☐ **SPP**	☐	7 — Large Electricity End Users
☐ **WECC**	☐	8 — Small Electricity End Users
☐ **NA – Not Applicable**	☐	9 — Federal, State, Provincial Regulatory or other Government Entities
	☐	10 — Regional Reliability Organizations and Regional Entities

Group Comments (Complete this page if comments are from a group.)

Group Name: Public Service Commission of South Carolina

Lead Contact: Phil Riley

Contact Organization: Public Service Commission of South Carolina

Contact Segment: 9

Contact Telephone: 803-896-5154

Contact E-mail: philip.riley@psc.sc.gov

Additional Member Name	Additional Member Organization	Region*	Segment*
Mignon L. Clyburn	Public Service Commission of SC	SERC	9
Elizabeth B. "Lib" Fleming	Public Service Commission of SC	SERC	9
G. O'Neal Hamilton	Public Service Commission of SC	SERC	9
John E. "Butch" Howard	Public Service Commission of SC	SERC	9
Randy Mitchell	Public Service Commission of SC	SERC	9
C. Robert "Bob" Moseley	Public Service Commission of SC	SERC	9
David A. Wright	Public Service Commission of SC	SERC	9

*If more than one Region or Segment applies, indicate the best fit for the purpose of these comments. Regional acronyms and segment numbers are shown on prior page.

Background Information

This SAR proposes to merge the requirements from the following standards into a single standard to reduce the costs of compliance while also improving efficiencies:

- PRC-005-1 — Transmission and Generation Protection System Maintenance and Testing
- PRC-008-0 — Underfrequency Load Shedding Equipment Maintenance Programs
- PRC-011-0 — UVLS System Maintenance and Testing
- PRC-017-0 — Special Protection System Maintenance and Testing

The SAR also proposes to address the FERC directives in Order 693 and to address a number of technical short comings identified by stakeholders and the System Protection and Control Task Force and to bring the standard into conformance with the "Standard Review Guidelines." The goal is to provide a set of requirements that will support reliable performance when responding to abnormal system conditions.

Please review the SAR and then answer the questions on the following page. Please e-mail your comments on this form to sarcomm@nerc.net with the subject "Protection Maintenance SAR" by **July 10, 2007**.

You do not have to answer all questions. Enter All Comments in Simple Text Format.

Insert a "check" mark in the appropriate boxes by double-clicking the gray areas.

1. Do you agree that there is a reliability-related need to improve the requirements in this set of standards?

   ☒ Yes

   ☐ No

   Comments:

2. Do you agree with the proposed scope of this SAR?

   ☒ Yes

   ☐ No

   Comments:

3. Do you agree with the applicability of the proposed SAR (Transmission Owners, Generator Owners and Distribution Providers - Distribution Providers may own the devices that must be tested and maintained)?

   ☒ Yes

   ☐ No

   Comments:

4. If you know of a Regional Variance that should be developed as part of this SAR, please identify that for us. If not, please explain in the comment area.

   Regional Variance:
   Comments: N/A

5. If you are aware of a Business Practice that needs to be developed to support the proposed SAR, please identify that for us.

   Business Practice:
   Comments: N/A

6. If you have any other comments on this SAR that you haven't provided above, please provide them here.

   Comments: N/A

Comment Form — First Draft of SAR for Project 2007-17 — Protection System Maintenance and Testing

Please use this form to submit comments on the proposed SAR for Project 2007-17 — Protection System Maintenance and Testing. Comments must be submitted by **July 10, 2007**. You may submit the completed form by e-mail to sarcomm@nerc.net with the words "Protection Maintenance" in the subject line. If you have questions please contact Al Calafiore at al.calafiore@nerc.net or by telephone at 609-452-8060.

Individual Commenter Information (Complete this page for comments from one organization or individual.)		
Name:	Mike Gentry	
Organization:	Salt River Project	
Telephone:	602-236-6408	
E-mail:	Mike.Gentry@srpnet.com	
NERC Region		**Registered Ballot Body Segment**
☐ **ERCOT**	☒	1 — Transmission Owners
☐ **FRCC**	☐	2 — RTOs and ISOs
☐ **MRO**	☐	3 — Load-serving Entities
☐ **NPCC**	☐	4 — Transmission-dependent Utilities
☐ **RFC**	☐	5 — Electric Generators
☐ **SERC**	☐	6 — Electricity Brokers, Aggregators, and Marketers
☐ **SPP**	☐	7 — Large Electricity End Users
☒ **WECC**	☐	8 — Small Electricity End Users
☐ **NA – Not Applicable**	☐	9 — Federal, State, Provincial Regulatory or other Government Entities
	☐	10 — Regional Reliability Organizations and Regional Entities

Group Comments (Complete this page if comments are from a group.)

Group Name:

Lead Contact:

Contact Organization:

Contact Segment:

Contact Telephone:

Contact E-mail:

Additional Member Name	Additional Member Organization	Region*	Segment*

*If more than one Region or Segment applies, indicate the best fit for the purpose of these comments. Regional acronyms and segment numbers are shown on prior page.

Background Information

This SAR proposes to merge the requirements from the following standards into a single standard to reduce the costs of compliance while also improving efficiencies:

- PRC-005-1 — Transmission and Generation Protection System Maintenance and Testing
- PRC-008-0 — Underfrequency Load Shedding Equipment Maintenance Programs
- PRC-011-0 — UVLS System Maintenance and Testing
- PRC-017-0 — Special Protection System Maintenance and Testing

The SAR also proposes to address the FERC directives in Order 693 and to address a number of technical short comings identified by stakeholders and the System Protection and Control Task Force and to bring the standard into conformance with the "Standard Review Guidelines." The goal is to provide a set of requirements that will support reliable performance when responding to abnormal system conditions.

Please review the SAR and then answer the questions on the following page. Please e-mail your comments on this form to sarcomm@nerc.net with the subject "Protection Maintenance SAR" by **July 10, 2007**.

You do not have to answer all questions. Enter All Comments in Simple Text Format.

Insert a "check" mark in the appropriate boxes by double-clicking the gray areas.

1. Do you agree that there is a reliability-related need to improve the requirements in this set of standards?

   ☒ Yes

   ☐ No

   Comments:

2. Do you agree with the proposed scope of this SAR?

   ☒ Yes

   ☐ No

   Comments:

3. Do you agree with the applicability of the proposed SAR (Transmission Owners, Generator Owners and Distribution Providers - Distribution Providers may own the devices that must be tested and maintained)?

   ☒ Yes

   ☐ No

   Comments:

4. If you know of a Regional Variance that should be developed as part of this SAR, please identify that for us. If not, please explain in the comment area.

   Regional Variance:
   Comments:

5. If you are aware of a Business Practice that needs to be developed to support the proposed SAR, please identify that for us.

   Business Practice:
   Comments:

6. If you have any other comments on this SAR that you haven't provided above, please provide them here.

   Comments: None.

Comment Form — First Draft of SAR for Project 2007-17 — Protection System Maintenance and Testing

Please use this form to submit comments on the proposed SAR for Project 2007-17 — Protection System Maintenance and Testing. Comments must be submitted by **July 10, 2007**. You may submit the completed form by e-mail to sarcomm@nerc.net with the words "Protection Maintenance" in the subject line. If you have questions please contact Al Calafiore at al.calafiore@nerc.net or by telephone at 609-452-8060.

Individual Commenter Information **(Complete this page for comments from one organization or individual.)**		
Name:		
Organization:		
Telephone:		
E-mail:		
NERC Region		**Registered Ballot Body Segment**
☐ **ERCOT**	☐	1 — Transmission Owners
☐ **FRCC**	☐	2 — RTOs and ISOs
☐ **MRO**	☐	3 — Load-serving Entities
☐ **NPCC**	☐	4 — Transmission-dependent Utilities
☐ **RFC**	☐	5 — Electric Generators
☐ **SERC**	☐	6 — Electricity Brokers, Aggregators, and Marketers
☐ **SPP**	☐	7 — Large Electricity End Users
☐ **WECC**	☐	8 — Small Electricity End Users
☐ **NA – Not Applicable**	☐	9 — Federal, State, Provincial Regulatory or other Government Entities
	☐	10 — Regional Reliability Organizations and Regional Entities

Group Comments (Complete this page if comments are from a group.)

Group Name: SERC EC Protection & Control Subcommittee (PCS)

Lead Contact: Jay Farrington

Contact Organization: Alabama Electric Cooperative, Inc.

Contact Segment: 1

Contact Telephone: (334) 427-3225

Contact E-mail: jay.farrington@powersouth.com

Additional Member Name	Additional Member Organization	Region*	Segment*
Robert Rauschenbach	Ameren	SERC	1
Charlie Fink	Entergy	SERC	1
Jammie Lee	Entergy	SERC	1
Tom Seeley	E.ON-U.S.	SERC	1
Steve Waldrep	Georgia Power Company	SERC	1
Hong-Ming Shuh	Georgia Transmission Corporation	SERC	1
Neal Jones	Georgia Transmission Corporation	SERC	1
Jerry Blackley	Progress Energy Carolinas	SERC	1
Pat Huntley	SERC Reliability Corp.	SERC	10
Marion Frick	South Carolina Electric & Gas Co.	SERC	1
Bridget Coffman	South Carolina Public Service Authority	SERC	1
George Pitts	Tennessee Valley Authority	SERC	1
Meyer Kao	Tennessee Valley Authority	SERC	1
Phil Winston	Georgia Power Company	SERC	1
Ernesto Paon	Municipal Electric Authority of Georgia	SERC	1

*If more than one Region or Segment applies, indicate the best fit for the purpose of these comments. Regional acronyms and segment numbers are shown on prior page.

Background Information

This SAR proposes to merge the requirements from the following standards into a single standard to reduce the costs of compliance while also improving efficiencies:

- PRC-005-1 — Transmission and Generation Protection System Maintenance and Testing
- PRC-008-0 — Underfrequency Load Shedding Equipment Maintenance Programs
- PRC-011-0 — UVLS System Maintenance and Testing
- PRC-017-0 — Special Protection System Maintenance and Testing

The SAR also proposes to address the FERC directives in Order 693 and to address a number of technical short comings identified by stakeholders and the System Protection and Control Task Force and to bring the standard into conformance with the "Standard Review Guidelines." The goal is to provide a set of requirements that will support reliable performance when responding to abnormal system conditions.

Please review the SAR and then answer the questions on the following page. Please e-mail your comments on this form to sarcomm@nerc.net with the subject "Protection Maintenance SAR" by **July 10, 2007**.

You do not have to answer all questions. Enter All Comments in Simple Text Format.

Insert a "check" mark in the appropriate boxes by double-clicking the gray areas.

1. Do you agree that there is a reliability-related need to improve the requirements in this set of standards?

   ☒ Yes

   ☐ No

   Comments: Consolidation of the maintenance and testing standards is appropriate. Separate definitions for maintenance and testing are needed.

2. Do you agree with the proposed scope of this SAR?

   ☒ Yes

   ☐ No

   Comments:

3. Do you agree with the applicability of the proposed SAR (Transmission Owners, Generator Owners and Distribution Providers - Distribution Providers may own the devices that must be tested and maintained)?

   ☒ Yes

   ☐ No

   Comments:

4. If you know of a Regional Variance that should be developed as part of this SAR, please identify that for us. If not, please explain in the comment area.

   Regional Variance: none
   Comments:

5. If you are aware of a Business Practice that needs to be developed to support the proposed SAR, please identify that for us.

   Business Practice: none
   Comments:

6. If you have any other comments on this SAR that you haven't provided above, please provide them here.

   Comments: The SERC EC PCS supports the work of the NERC SPCTF in their assessments of these standards.

Comment Form — First Draft of SAR for Project 2007-17 — Protection System Maintenance and Testing

Please use this form to submit comments on the proposed SAR for Project 2007-17 — Protection System Maintenance and Testing. Comments must be submitted by **July 10, 2007**. You may submit the completed form by e-mail to sarcomm@nerc.net with the words "Protection Maintenance" in the subject line. If you have questions please contact Al Calafiore at al.calafiore@nerc.net or by telephone at 609-452-8060.

Individual Commenter Information **(Complete this page for comments from one organization or individual.)**		
Name:		
Organization:		
Telephone:		
E-mail:		
NERC Region		**Registered Ballot Body Segment**
☐ **ERCOT**	☒	1 — Transmission Owners
☐ **FRCC**	☐	2 — RTOs and ISOs
☐ **MRO**	☒	3 — Load-serving Entities
☐ **NPCC**	☐	4 — Transmission-dependent Utilities
☐ **RFC**	☐	5 — Electric Generators
☒ **SERC**	☐	6 — Electricity Brokers, Aggregators, and Marketers
☐ **SPP**	☐	7 — Large Electricity End Users
☐ **WECC**	☐	8 — Small Electricity End Users
☐ **NA – Not Applicable**	☐	9 — Federal, State, Provincial Regulatory or other Government Entities
	☐	10 — Regional Reliability Organizations and Regional Entities

Group Comments (Complete this page if comments are from a group.)

Group Name: Southern Company Transmission

Lead Contact: Roman Carter

Contact Organization: Southern Company Transmission

Contact Segment: 1

Contact Telephone: 205.257.6027

Contact E-mail: jrcarter@southernco.com

Additional Member Name	Additional Member Organization	Region*	Segment*
Marc Butts	Southern Co. Transmission	SERC	1
JT Wood	Southern Co. Transmission	SERC	1
Jim Busbin	Southern Co. Transmission	SERC	1
Phil Winston	Georgia Power Co.	SERC	3

*If more than one Region or Segment applies, indicate the best fit for the purpose of these comments. Regional acronyms and segment numbers are shown on prior page.

Background Information

This SAR proposes to merge the requirements from the following standards into a single standard to reduce the costs of compliance while also improving efficiencies:

- PRC-005-1 — Transmission and Generation Protection System Maintenance and Testing
- PRC-008-0 — Underfrequency Load Shedding Equipment Maintenance Programs
- PRC-011-0 — UVLS System Maintenance and Testing
- PRC-017-0 — Special Protection System Maintenance and Testing

The SAR also proposes to address the FERC directives in Order 693 and to address a number of technical short comings identified by stakeholders and the System Protection and Control Task Force and to bring the standard into conformance with the "Standard Review Guidelines." The goal is to provide a set of requirements that will support reliable performance when responding to abnormal system conditions.

Please review the SAR and then answer the questions on the following page. Please e-mail your comments on this form to sarcomm@nerc.net with the subject "Protection Maintenance SAR" by **July 10, 2007**.

You do not have to answer all questions. Enter All Comments in Simple Text Format.

Insert a "check" mark in the appropriate boxes by double-clicking the gray areas.

1. Do you agree that there is a reliability-related need to improve the requirements in this set of standards?

   ☒ Yes

   ☐ No

   Comments:

2. Do you agree with the proposed scope of this SAR?

   ☒ Yes

   ☐ No

   Comments:

3. Do you agree with the applicability of the proposed SAR (Transmission Owners, Generator Owners and Distribution Providers - Distribution Providers may own the devices that must be tested and maintained)?

   ☒ Yes

   ☐ No

   Comments:

4. If you know of a Regional Variance that should be developed as part of this SAR, please identify that for us. If not, please explain in the comment area.

   Regional Variance:
   Comments:

5. If you are aware of a Business Practice that needs to be developed to support the proposed SAR, please identify that for us.

   Business Practice:
   Comments:

6. If you have any other comments on this SAR that you haven't provided above, please provide them here.

   Comments: In the SAR you state "The revised PRC-005 standard should address the issues raised in the FERC Order 693". With the exception of mentioning the consolidation of the standards into one standard, the SAR drafting team didn't provide readers with the exact language from FERC that would be useful to know with respect to PRC-005 in the directive below:

The Commission directs the ERO to develop a modification to PRC-005-1 through the Reliability Standards development process that includes a requirement that maintenance and testing of a protection system must be carried out within a maximum allowable interval that is appropriate to the type of the protection system and its impact on the reliability of the Bulk-Power System. We further direct the ERO to consider FirstEnergy's and ISO-NE's suggestion to combine PRC-005-1, PRC-008-0, PRC-011-0 and PRC-017-0 into a single Reliability Standard through the Reliability Standards development process.

Comment Form — First Draft of SAR for Project 2007-17 — Protection System Maintenance and Testing

Please use this form to submit comments on the proposed SAR for Project 2007-17 — Protection System Maintenance and Testing. Comments must be submitted by **July 10, 2007**. You may submit the completed form by e-mail to sarcomm@nerc.net with the words "Protection Maintenance" in the subject line. If you have questions please contact Al Calafiore at al.calafiore@nerc.net or by telephone at 609-452-8060.

Individual Commenter Information **(Complete this page for comments from one organization or individual.)**		
Name:		
Organization:		
Telephone:		
E-mail:		
NERC Region		**Registered Ballot Body Segment**
☐ **ERCOT**	☐	1 — Transmission Owners
☐ **FRCC**	☐	2 — RTOs and ISOs
☐ **MRO**	☐	3 — Load-serving Entities
☐ **NPCC**	☐	4 — Transmission-dependent Utilities
☐ **RFC**	☐	5 — Electric Generators
☐ **SERC**	☐	6 — Electricity Brokers, Aggregators, and Marketers
☐ **SPP**	☐	7 — Large Electricity End Users
☐ **WECC**	☐	8 — Small Electricity End Users
☐ **NA – Not Applicable**	☐	9 — Federal, State, Provincial Regulatory or other Government Entities
	☐	10 — Regional Reliability Organizations and Regional Entities

Group Comments (Complete this page if comments are from a group.)

Group Name: IRC Standards Review Committee

Lead Contact: Charles Yeung

Contact Organization: SPP

Contact Segment: 2

Contact Telephone: 832-724-6142

Contact E-mail: cyeung@spp.org

Additional Member Name	Additional Member Organization	Region*	Segment*
Jim Castle	NYISO	NPCC	2
Alicia Daugherty	PJM	RFC	2
Ron Falsetti	IESO	NPCC	2
Matt Goldberg	ISO-NE	NPCC	2
Brent Kingsford	CAISO	WECC	2
Anita Lee	AESO	WECC	2
Steve Myers	ERCOT	ERCOT	2
William Phillips	MISO	RFC+MRO+SERC	2

*If more than one Region or Segment applies, indicate the best fit for the purpose of these comments. Regional acronyms and segment numbers are shown on prior page.

Background Information

This SAR proposes to merge the requirements from the following standards into a single standard to reduce the costs of compliance while also improving efficiencies:

- PRC-005-1 — Transmission and Generation Protection System Maintenance and Testing
- PRC-008-0 — Underfrequency Load Shedding Equipment Maintenance Programs
- PRC-011-0 — UVLS System Maintenance and Testing
- PRC-017-0 — Special Protection System Maintenance and Testing

The SAR also proposes to address the FERC directives in Order 693 and to address a number of technical short comings identified by stakeholders and the System Protection and Control Task Force and to bring the standard into conformance with the "Standard Review Guidelines." The goal is to provide a set of requirements that will support reliable performance when responding to abnormal system conditions.

Please review the SAR and then answer the questions on the following page. Please e-mail your comments on this form to sarcomm@nerc.net with the subject "Protection Maintenance SAR" by **July 10, 2007**.

You do not have to answer all questions. Enter All Comments in Simple Text Format.

Insert a "check" mark in the appropriate boxes by double-clicking the gray areas.

1. Do you agree that there is a reliability-related need to improve the requirements in this set of standards?

   ☒ Yes

   ☐ No

   Comments:

2. Do you agree with the proposed scope of this SAR?

   ☒ Yes

   ☐ No

   Comments:

3. Do you agree with the applicability of the proposed SAR (Transmission Owners, Generator Owners and Distribution Providers - Distribution Providers may own the devices that must be tested and maintained)?

   ☒ Yes

   ☐ No

   Comments:

4. If you know of a Regional Variance that should be developed as part of this SAR, please identify that for us. If not, please explain in the comment area.

   Regional Variance:
   Comments:

5. If you are aware of a Business Practice that needs to be developed to support the proposed SAR, please identify that for us.

   Business Practice: none
   Comments:

6. If you have any other comments on this SAR that you haven't provided above, please provide them here.

   Comments:

   1. The SRC commends NERC, the SDT and the SPCTF for providing clarity and for efforts to reduce the costs of compliance.

2 In the Standard PRC-008-0, Generation Owners were not included in the applicable entities. Generation Owners may have underfrequency tripping devices for protection of their units. It would be appropriate to include these devices for maintenance and testing requirements also.

3. Further, there is need to specify which types of relays will be covered by the new standard. The SAR Team needs to focus on better defining the Generator Protection Schemes ("GPS") that are critical to bulk power system operation, as distinct from generator operation. For example, a single generating unit may experience contingency events that would not result in any significant adverse impacts outside the local area in which the single generating unit is located. As a result, there remains a need to subject those GPSs that are important to the Bulk Power System, such as generator underfrequency trip settings, to the maintenance testing intervals to be derived in these standards.

4. Certain unavoidable delays like the inability to schedule outages for reliability reasons, labor disputes, or force-majeure conditions could affect testing period requirements. These factors should be considered and certain latitude needs to be provided for delays in the testing process.

5. However, the SAR team needs to also consider,as part of its scope, assurance that the asset owner has taken all appropriate steps to assure that required outages are appropriately planned and can be reasonably accommodated and approved by the TOP or RC.

Comment Form — First Draft of SAR for Project 2007-17 — Protection System Maintenance and Testing

Please use this form to submit comments on the proposed SAR for Project 2007-17 — Protection System Maintenance and Testing. Comments must be submitted by **July 10, 2007**. You may submit the completed form by e-mail to sarcomm@nerc.net with the words "Protection Maintenance" in the subject line. If you have questions please contact Al Calafiore at al.calafiore@nerc.net or by telephone at 609-452-8060.

Individual Commenter Information **(Complete this page for comments from one organization or individual.)**		
Name:		
Organization:		
Telephone:		
E-mail:		
NERC Region		**Registered Ballot Body Segment**
☐ **ERCOT**	☐	1 — Transmission Owners
☐ **FRCC**	☐	2 — RTOs and ISOs
☐ **MRO**	☐	3 — Load-serving Entities
☐ **NPCC**	☐	4 — Transmission-dependent Utilities
☐ **RFC**	☐	5 — Electric Generators
☐ **SERC**	☐	6 — Electricity Brokers, Aggregators, and Marketers
☐ **SPP**	☐	7 — Large Electricity End Users
☐ **WECC**	☐	8 — Small Electricity End Users
☐ **NA – Not Applicable**	☐	9 — Federal, State, Provincial Regulatory or other Government Entities
	☐	10 — Regional Reliability Organizations and Regional Entities

Group Comments (Complete this page if comments are from a group.)

Group Name: Southwest Transmission Cooperative, Inc.

Lead Contact: E. William Riley

Contact Organization: Southwest Transmission Cooperative, Inc.

Contact Segment: 1

Contact Telephone: 520-586-5440

Contact E-mail: briley@swtransco.coop

Additional Member Name	Additional Member Organization	Region*	Segment*
Tom D. Spence, P.E	Southwest Transmission Coop., Inc.	WECC	1

*If more than one Region or Segment applies, indicate the best fit for the purpose of these comments. Regional acronyms and segment numbers are shown on prior page.

Background Information

This SAR proposes to merge the requirements from the following standards into a single standard to reduce the costs of compliance while also improving efficiencies:

- PRC-005-1 — Transmission and Generation Protection System Maintenance and Testing
- PRC-008-0 — Underfrequency Load Shedding Equipment Maintenance Programs
- PRC-011-0 — UVLS System Maintenance and Testing
- PRC-017-0 — Special Protection System Maintenance and Testing

The SAR also proposes to address the FERC directives in Order 693 and to address a number of technical short comings identified by stakeholders and the System Protection and Control Task Force and to bring the standard into conformance with the "Standard Review Guidelines." The goal is to provide a set of requirements that will support reliable performance when responding to abnormal system conditions.

Please review the SAR and then answer the questions on the following page. Please e-mail your comments on this form to sarcomm@nerc.net with the subject "Protection Maintenance SAR" by **July 10, 2007**.

You do not have to answer all questions. Enter All Comments in Simple Text Format.

Insert a "check" mark in the appropriate boxes by double-clicking the gray areas.

1. Do you agree that there is a reliability-related need to improve the requirements in this set of standards?

   ☒ Yes

   ☐ No

   Comments: This SAR proposes to revise several standards to eliminate ambiguities and to provide requirements that are measurable. In addition, the SPCTF report "Assessment of PRC-005-1 – Transmission and Generation Protection System Maintenance and Testing; with implications for PRC-008-0, PRC-011-0, and PRC-017-0" indicates the need to differentiate between the different technologies used and insure the standard applies to all in the appropriate way (i.e. electromechanicals, microprocessor-based, solid-state). Southwest Transmission Cooperative, Inc. also recognizes this deficit in the existing standards.

2. Do you agree with the proposed scope of this SAR?

   ☒ Yes

   ☐ No

   Comments: Since most protection schemes are maintained and tested in a similar manner regardless of scheme type, we agree that combining the (4) PRC standards related to maintenance and testing of different types of systems into one standard will create a that is more streamlined and less burdensome standard with easily understood measurable compliance elements.

   The most exciting part of the proposed modifications is the inclusion of condition-based and performance-based maintenance and testing and not just time-based criteria. Presently Southwest Transmission Cooperative, Inc. uses this type of maintenance and testing criteria (maintenance data server) which is the current system protection industry technology.

3. Do you agree with the applicability of the proposed SAR (Transmission Owners, Generator Owners and Distribution Providers - Distribution Providers may own the devices that must be tested and maintained)?

   ☒ Yes

   ☐ No

   Comments:

4. If you know of a Regional Variance that should be developed as part of this SAR, please identify that for us. If not, please explain in the comment area.

   Regional Variance: N/A

Comments: Not aware of any Regional Variance requirements

5. If you are aware of a Business Practice that needs to be developed to support the proposed SAR, please identify that for us.

   Business Practice: N/A
   Comments: Not aware of any Business Practice needs

6. If you have any other comments on this SAR that you haven't provided above, please provide them here.

   Comments: N/A

Consideration of Comments on 1st Draft of Protection System Maintenance and Testing SAR (Project 2007-17)

The Protection System Maintenance and Testing SAR requesters thank all commenters who submitted comments on the first draft of SAR. This SAR was posted for a 30-day public comment period from June 11 through July 10, 2007. The requesters asked stakeholders to provide feedback on the standard through a special SAR Comment Form. There were 18 sets of comments, including comments from 85 different people from more than 50 companies representing 8 of the 10 Industry Segments as shown in the table on the following pages.

The SAR drafting team made no changes to the SAR based on stakeholder comments.

Based on the comments received, the drafting team is recommending that the Standards Committee authorize moving the SAR forward to the standard drafting stage of the standards development process.

In this "Consideration of Comments" document stakeholder comments have been organized so that it is easier to see the responses associated with each question. All comments received on the standards can be viewed in their original format at:

http://www.nerc.com/~filez/standards/Protection_System_Maintenance_Project_2007-17.html

If you feel that your comment has been overlooked, please let us know immediately. Our goal is to give every comment serious consideration in this process! If you feel there has been an error or omission, you can contact the Director of Standards, Gerry Adamski, at 609-452-8060 or at gerry.adamski@nerc.net. In addition, there is a NERC Reliability Standards Appeals Process.[1]

[1] The appeals process is in the Reliability Standards Development Procedures: http://www.nerc.com/standards/newstandardsprocess.html.

The Industry Segments are:

1 — Transmission Owners
2 — RTOs, ISOs
3 — Load-serving Entities
4 — Transmission-dependent Utilities
5 — Electric Generators
6 — Electricity Brokers, Aggregators, and Marketers
7 — Large Electricity End Users
8 — Small Electricity End Users
9 — Federal, State, Provincial Regulatory or other Government Entities
10 – Regional Reliability Organizations, Regional Entities

Commenter		Organization	Industry Segment									
			1	2	3	4	5	6	7	8	9	10
1.	Anita Lee (G6)	AESO		✓								
2.	Jay Farrington (G2)	Alabama Electric Coop., Inc.	✓									
3.	Ken Goldsmith (G5)	ALT										✓
4.	Robert Rauschenbach (G2)	Ameren	✓									
5.	Thad Kness	American Electric Power (AEP)	✓				✓	✓				
6.	Dave Rudolph (G4)	BEPC										✓
7.	Dean Bender	Bonneville Power Administration (BPA)	✓		✓		✓	✓				
8.	Brent Kingsford (G6)	CAISO		✓								
9.	Alan Gale	City of Tallahassee (FRCC)					✓					
10.	Glen McCartney (G4)	Constellation Energy						✓				
11.	Michael Gildea (G4)	Constellation Energy						✓				
12.	Nancy C. Denton	Consumers Energy Company			✓	✓						
13.	Greg Rowland	Duke Energy										
14.	Tom Seeley (G2)	E. ON-U.S.	✓									
15.	Charlie Fink (G2)	Entergy	✓									
16.	Jammie Lee (G2)	Entergy	✓									
17.	Steve Myers (G6)	ERCOT		✓								
18.	Doug Hohlbaugh (G7)	FirstEnergy Corp. (FE)	✓		✓		✓	✓				
19.	Craig Boyle (G7)	Transm. Substa.	✓									

Commenter		Organization	Industry Segment									
			1	2	3	4	5	6	7	8	9	10
		Maintenance (FE)										
20.	Ken Ddresner (G7)	Fossil Generation (FE)					✓					
21.	Bill Duge (G7)	Nuclear Generation (FE)					✓					
22.	Dave Powell (G7)	Transm. Planning & Protection (FE)	✓									
23.	Jeff Mackauer(G7)	Transm. Planning & Protection (FE)	✓									
24.	Eric Senkowizc	FRCC		✓								
25.	Phil Winston (G3)	Georgia Power Company			✓							
26.	Steve Waldrep (G2)	Georgia Power Company	✓									
27.	Phil Winston (G2)	Georgia Power Company	✓									
28.	Hong-Ming Shuh (G2)	Georgia Transmission Corp.	✓									
29.	Neal Jones (G2)	Georgia Transmission Corp.	✓									
30.	David Kiguel (G4)	Hydro One Networks	✓									
31.	Ron Falsetti (I) (G6)	IESO		✓								
32.	Matt Goldberg (G6)	ISO- New England		✓								
33.	Kathleen Goodman (G4)	ISO-New England		✓								
34.	William Shemley (G4)	ISO-New England		✓								
35.	Eric Ruskamp (G4)	LES										✓
36.	Donald Nelson (G4)	MADPC									✓	
37.	Tony Clark	Manitoba Hydro	✓		✓		✓	✓				
38.	Tom Mielnik (G4)	MEC										✓
39.	Robert Coish (G5)	MHEB										✓
40.	Joe Knight (G5)	Midwest Reliability Organization										✓
41.	Mike Brytowski (G4)	Midwest Reliability Organization										✓
42.	Terry Bilke (G5)	MISO										✓
43.	William Phillips (G6)	MISO		✓								
44.	Carol Gerou (G5)	Minnesota Power (MP)										✓
45.	Ernesto Paon (G2)	Municipal Electric Authority of GA	✓									
46.	Michael Shiavone (G4)	National Grid US	✓									

Commenter		Organization	Industry Segment									
			1	2	3	4	5	6	7	8	9	10
47.	Greg Campoli (G4)	New York ISO		✓								
48.	Ralph Rufrano (G4)	New York Power Authority	✓									
49.	Murale Gopinathan (G4)	Northeast Utilities	✓									
50.	Guy V. Zito (G4)	NPCC										✓
51.	Al Adamson (G4)	NY State Reliability Council										✓
52.	Jim Castle (G6)	NYISO		✓								
53.	Richard Kafka (G8)	Pepco Holdings, Inc.										
54.	Alicia Daugherty (G6)	PJM		✓								
55.	Jerry Blackley (G2)	Progress Energy Carolinas	✓									
56.	Phil Riley (G1)	PSC of South Carolina									✓	
57.	Mignon L. Clyburn (G1)	PSC of South Carolina									✓	
58.	Elizabeth B. Fleming (G1)	PSC of South Carolina									✓	
59.	G. O'Neal Hamilton (G1)	PSC of South Carolina									✓	
60.	John E. Howard (G1)	PSC of South Carolina									✓	
61.	Randy Mitchell (G1)	PSC of South Carolina									✓	
62.	C. Robert Moseley (G1)	PSC of South Carolina									✓	
63.	David A. Wright (G1)	PSC of South Carolina									✓	
64.	Mike Gentry	Salt River Project (SRP)	✓									
65.	Bridget Coffman (G2)	SC Public Service Authority	✓									
66.	Pat Huntley (G2)	SERC Reliability Corp.										✓
67.	Roman Carter (G3)	So. Company Transmission	✓									
68.	Marc Butts (G3)	So. Company Transmission	✓									
69.	JT Wood (G3)	So. Company Transmission	✓									
70.	Jim Busbin (G3)	So. Company Transmission	✓									
71.	Marion Frick (G2)	South Carolina Electric & Gas Co.	✓									

Commenter		Organization	Industry Segment									
			1	2	3	4	5	6	7	8	9	10
72.	Charles Yeung (G6)	Southwest Power Pool		✓								
73.	E. William Riley	Southwest Transmission Co., Inc.	✓									
74.	Tom D. Spence	Southwest Transmission Co., Inc.	✓									
75.	George Pitts (G2)	Tennessee Valley Authority	✓									
76.	Meyer Kao (G2)	Tennessee Valley Authority	✓									
77.	Ron Falsetti (G4) (G6)	The IESO		✓								
78.	Roger Champagne (G4)(I)	TransÉnergie Hydro-Québec (HQTE)	✓									
79.	Jim Haigh (G4)	WAPA										✓
80.	Neal Balu (G5)	WPS										✓
81.	Pam Oreschnick (G4)	XEL										✓
82.	Carl Kinsley (G8)	Delmarva Power & Light	✓									
83.	Alvin Depew (G8)	Potomac Electric Power Company	✓									
84.	Evan Sage (G8)	Potomac Electric Power Company	✓									

I – Indicates that individual comments were submitted in addition to comments submitted as part of a group
G1 – Public Service Commission of South Carolina (PSC SC)
G2 – SERC EC Protection & Control Subcommittee (SERC EC PCS)
G3 – Southern Company Transmission
G4 – NPCC CP9 Reliability Standards Working Group (NPCC CP9 RSWG)
G5 – MRO Members (MRO)
G6 – IRC Standards Review Committee (IRC)
G7 – FirstEnergy Corp. (FE)
G8 – Pepco Holdings, Inc.

Index to Questions, Comments, and Responses

1. Do you agree that there is a reliability-related need to improve the requirements in this standard? 7
2. Do you agree with the proposed scope of this SAR? 9
3. Do you agree with the applicability of the proposed SAR (Transmission Owners, Generator Owners and Distribution Providers - Distribution Providers may own the devices that must be tested and maintained)? 12
4. If you know of a Regional Variance that should be developed as part of this SAR, please identify that for us. If not, please explain in the comment area. 14
5. If you are aware of a Business Practice that needs to be developed to support the proposed SAR, please identify that for us. 15
6. If you have any other comments on this SAR that you haven't provided above, please provide them here. 16

1. Do you agree that there is a reliability-related need to improve the requirements in this standard?

Summary Consideration: Most commentators indicated they do believe there is a reliability-related need to improve the requirements in this set of standards.

Question #1			
Commenter	**Yes**	**No**	**Comment**
AEP		☑	AEP has not had an event, due to deficiencies in protection maintenance, in it's long existence that jeopardized the reliability or availability of Bulk Power transfers. Simply combining multiple standards into one, does nothing for improving reliability.
Response: The proposed changes will improve clarity which should benefit reliability. While AEP may have an excellent record of maintenance, the existing standards are quite vague and allow an entity that performs maintenance once every 100 years to be fully compliant.			
Manitoba Hydro		☑	There is a need to better define and explain the terms "maintenance" and "testing" as they relate to this standard. Also a tighter definition as to which systems are considered to affect the BES is required. The need to improve the standard is driven by the administration of the standard rather than reliability.
Response: As envisioned, the SDT will work with stake holders to define the terms 'maintenance' and 'testing.' The SAR DT disagrees that the standard changes are driven by "administration". The existing requirements are vague enough to allow an entity to perform maintenance once every 100 years and still be compliant.			
SWTC	☑		This SAR proposes to revise several standards to eliminate ambiguities and to provide requirements that are measurable. In addition, the SPCTF report "Assessment of PRC-005-1 – Transmission and Generation Protection System Maintenance and Testing; with implications for PRC-008-0, PRC-011-0, and PRC-017-0" indicates the need to differentiate between the different technologies used and insure the standard applies to all in the appropriate way (i.e. electro-mechanicals, microprocessor-based, solid-state). Southwest Transmission Cooperative, Inc. also recognizes this deficit in the existing standards.
Response: The SAR DT agrees and appreciates your support.			
SERC EC PCS	☑		Consolidation of the maintenance and testing standards is appropriate. Separate definitions for maintenance and testing are needed.
Response: The SAR DT agrees and appreciates your support.			
FRCC	☑		Centralizing System Protection equipment maintenance and testing requirements in a single standard will add clarity, minimize synchronization issues across standards, help provide consistent terminology and improve understanding of system protection standards.
Response: The SAR DT agrees and appreciates your support.			

Question #1			
Commenter	**Yes**	**No**	**Comment**
PSC SC	☑		
BPA	☑		
Consumers Energy	☑		
IESO	☑		
SRP	☑		
SOCO Transmission	☑		
NPCC CP9 RSWG	☑		
MRO	☑		
IRC	☑		
FirstEnergy	☑		
HQT	☑		
Pepco Holdings	☑		
Duke Energy	☑		

2. Do you agree with the proposed scope of this SAR?

Summary Consideration: Some entities objected to the use of 'maximum allowable intervals,' however, FERC has ordered that maximum allowable intervals be developed. No changes to the SAR were made in response to these comments.

Question #2			
Commenter	**Yes**	**No**	**Comment**
AEP		☑	On the surface, the premise of reducing costs and improving efficiencies by combining multiple standards sounds excellent. Having to only keep up with one standard instead of four will not generate significant savings due to the fact that the maintenance will still have to be performed. But what lies hidden, is the fact that prescribed maximum allowable maintenance intervals will result from the revisions. They may require more frequent testing to be performed. Is there evidence that increasing the interval frequency results in a measurable increase in reliability and availability? Development of prescribed maximum intervals that are vastly different than the utility's existing practices may actual increase their O&M costs and reduce efficiencies. The function of the protective system needs to be taken into account. The purpose of the line protection is very different than the purpose of UFLS/UVLS and SPS's. The UFLS program is there as the last line of defense against a decaying system after all other measures have failed. The combination of all the different relaying systems places them on equal ground. Shouldn't the reliability and dependability for one be more important than the others?
Response: In order to develop a measurable standard and conform to the direction from FERC regarding allowable maintenance intervals, the SDT, working with stakeholders, will develop requirements for maximum allowable maintenance intervals for protection systems. Combining these 4 standards into 1 does not preclude the SDT from developing different criteria for different types of protection systems. Your concerns regarding the different purposes of protection systems and your question regarding varying importance of different protection systems will be forwarded to the SDT.			
Manitoba Hydro		☑	We disagree that there is a need to change the standard to include more specificity for maintenance and test procedures. We also disagree with mandating minimum maintenance intervals for protection system equipment.
Response: FERC has directed NERC as the ERO to specify maximum allowable maintenance intervals.			
Duke Energy		☑	Combining PRC-005, 008, 011 and 017 into one new standard does not seem to be the best approach. Duke Energy does not have UVLS systems or Special Protection Systems. Furthermore, Duke Energy's Underfrequency Load Shedding system is on the transmission system in the Carolinas, but on the distribution system in the Midwest.

Question #2			
Commenter	**Yes**	**No**	**Comment**
			Combining these standards would likely create confusion and compliance issues for us and others as well. Also, combining the standards is unlikely to result in simplification, as different requirements associated with the different protection systems could have different Violation Risk Factors and levels of non-compliance, which would necessitate keeping them separate in the combined standard, which would defeat the purpose of combining them in the first place.
Response: Combining these 4 standards into 1 does not preclude the SDT from developing different criteria for different types of protection systems (concerns about different voltage levels remain regardless if there is one standard or more than one).			
SWTC	☑		Since most protection schemes are maintained and tested in a similar manner regardless of scheme type, we agree that combining the (4) PRC standards related to maintenance and testing of different types of systems into one standard will create a that is more streamlined and less burdensome standard with easily understood measurable compliance elements. The most exciting part of the proposed modifications is the inclusion of condition-based and performance-based maintenance and testing and not just time-based criteria. Presently Southwest Transmission Cooperative, Inc. uses this type of maintenance and testing criteria (maintenance data server) which is the current system protection industry technology.
Response: Thank you for your support.			
FirstEnergy	☑		Bullet #5 of the "Detailed Description" on page SAR-2 indicates the following: "Applicable to all four standards — The requirements of the existing standards, as stated, support time-based maintenance and testing, and should be expanded to include condition-based and performance-based maintenance and testing. The requirements for maintenance and testing procedures need to have more specificity to insure that the stated intent of the standards is met to support review by the compliance monitor." FE supports the scope of the SAR to consider adding the ability for condition-based and performance-based testing, as suggested by the System Protection and Control Task Force. Additionally, the SDT should consider the need to perform some level of preventative maintenance on a periodic basis at an established maximum interval length, that would vary per the equipment being maintained. The interval established would be based on established guidelines from vendors, EPRI, industry experts, etc.

Question #2			
Commenter	**Yes**	**No**	**Comment**
Response: Thank you- The SDT will develop maximum allowable maintenance intervals for protection systems, working with stakeholders.			
FRCC	☑	☑	Use of subject matter experts (NERC SPCTF) along with the NERC Planning Committee review of the assessment is an effective and efficient way to supplement project SARs and provides critical input at the front-end of the standards process. Attachment A is described as the SPCTF assessment, but attachment A to the SAR is the SPCTF roster. The assessment referenced in the scope of the SAR should include "Draft 1.0" if the full assessment is not included as part of the SAR.
Response: The attachments and supporting material references will be posted.			
PSC SC	☑		
SERC EC PCS	☑		
BPA	☑		
Consumers Energy	☑		
IESO	☑		
SRP	☑		
SOCO Transmission	☑		
NPCC CP9 RSWG	☑		
MRO	☑		
IRC	☑		
HQT	☑		
Pepco Holdings	☑		

3. Do you agree with the applicability of the proposed SAR (Transmission Owners, Generator Owners and Distribution Providers - Distribution Providers may own the devices that must be tested and maintained)?

Summary Consideration: Based on comments received no changes were made to the SAR

Question #3			
Commenter	**Yes**	**No**	**Comment**
FRCC			This question may be better addressed as the standards are integrated.
Response: The SAR DT is obligated to address the applicability,			
MRO		☑	FERC Order 693 in both paragraph 1466 and in footnote 384, indicates that in some areas of the country, Load Serving Entities (LSE) and Transmission Operators (TOP) may individually or jointly own and operate a protection system. Thus, these additional entities should be subject to the resulting consolidated standard. The MRO believes that the following caveat should be added to the LSE where it is listed as an Applicable Entity, (where operation of the protection system can affect the Bulk Electric System). 2. The MRO requests that the SDT review whether or not the Reliability Coordinator (RC) should be added to the list of Applicable Entities given their wide area view-for example, the RC may need to be involved in determining which protection systems below 100kV will affect the BES.
Response: FERC Order 693 in both paragraph 1466 and in footnote 384 reiterates IESO-NE comments on the NOPPR. The FERC directive was to consider this comment. According to the NERC Functional Model, Load-serving Entities, Transmission Operators and Reliability Coordinators are not owners of protection systems – and the entity responsible for maintenance is the facility owner.			
NPCC CP9 RSWG HQT	☑	☑	Each requirement needs to specifically address what protection systems need to comply with the standard - i.e. a generator not connected to the BPS with under frequency trip relay should only be subject to under frequency relay maintenance requirements.
Response: Your comment will be referred to the SDT for consideration when convened.			
FirstEnergy	☑		The inclusion of the Distribution Provider is generally needed for UFLS and UVLS relays. The confusion that previously existed in PRC-005 by including the DP entity should be mitigated by the proposed consolidation of the four maintenance standards.
Response: Thank you for your comment.			
PSC SC	☑		
SERC EC PCS	☑		
AEP	☑		
BPA	☑		

Question #3			
Commenter	**Yes**	**No**	**Comment**
Consumers Energy	☑		
IESO	☑		
SRP	☑		
SOCO Transmission	☑		
SWTC	☑		
IRC	☑		
Pepco Holdings	☑		
Duke Energy	☑		

4. If you know of a Regional Variance that should be developed as part of this SAR, please identify that for us. If not, please explain in the comment area.

Summary Consideration: No regional variances were identified by the commentators

Question #4		
Commenter	**Regional Variance**	**Comment**
NPCC CP9 RSWG	None	Certain unavoidable delays like the inability to schedule outages for reliability reasons or labor disputes, or force-majeure conditions could affect testing period requirements. These factors should be considered and certain latitude, with the "appropriate approvals", needs to be provided for delays in the testing process.
Response: This is a compliance issue not a regional variance – The compliance enforcement program does give the compliance monitor latitude to consider extenuating circumstances.		
PSC SC	N/A	
SERC EC PCS	None	
AEP	None	
BPA	No known regional variance.	
Consumers Energy	N/A	
SWTC	N/A	Not aware of any Regional Variance requirements.
MRO	None	
FirstEnergy		Not aware of any.
HQT	None	

5. If you are aware of a Business Practice that needs to be developed to support the proposed SAR, please identify that for us.

Summary Consideration: No needs for development of Business Practices were identified by the commentators.

Question #5		
Commenter	**Business Practice**	**Comment**
AEP	Possibly	AEP and other utilities, with many years of experience serving customers and supporting the electric grid, have voluntarily integrated maintenance and testing programs into the core of their work practices and processes. AEP fully supports improvements if they truly foster reliability and availability benefits to bulk power transfers. More Standards, Requirements and Business Practices are not always better. If Standards create burdens on a utility's physical resources and budgets, then some mechanism must be available to allow for the needed changes.
Response: Please monitor the work of the SDT and advise the team if added burdens are created by any of the proposed requirement and advise the team of the need for any business practice or other mechanism necessary to support the proposed requirements.		
PSC SC	N/A	
SERC EC PCS	None	
Consumers Energy	N/A	
SWTC	N/A	Not aware of any Business Practice needs.
NPCC CP9 RSWG	None that we know of.	
MRO	None	
IRC	None	
FirstEnergy		Not aware of any.
HQT		None that we know of.

6. If you have any other comments on this SAR that you haven't provided above, please provide them here.

Question #6	
Commenter	**Comment**
SERC EC PCS	The SERC EC PCS supports the work of the NERC SPCTF in their assessments of these standards.
Response: Thank you for your support	
AEP	The standard should not use the term Bulk Electric System, but should instead specify a voltage threshold for impacts to bulk system transfers - specifically; 'Facilities operated 200 kV and above and Regionally-defined, Operationally Significant facilities operated greater than 100 kV, but less than 199 kV'. The term 'affects' also needs to be clarified. Inclusion of all facilities greater than 100 kV does not benefit the reliability of national bulk power transfers. For example, the loss or misoperation of a 138 kV line serving a localized load center would not be detrimental to bulk power transfers multiple busses away.
Response: Your comment will be referred to the drafting team when convened for consideration when drafting the standard.	
BPA	In the "Detailed Description" section of the SAR, it states: "Part of the stated purpose in PRC-017 is: "To ensure that maintenance and testing programs are developed and misoperations are analyzed and corrected." The phrase "and misoperations are analyzed and corrected" is not clearly appropriate in a maintenance and testing standard. That is the purpose is more appropriate in PRC-003 and PRC-004, which relate to the analysis and mitigation of protection system misoperations. Analysis of correct operations or misoperations may be an integral part of condition-based maintenance processes, but need not be mandated in a maintenance standard." The analysis of SPS misoperations is handled in PRC-016 (SPS Misoperations) and PRC 012 (SPS review Procedure) not in PRC-003 or PRC-004. Therefore, if the phrase is removed from PRC-017, it does not need to be added to PRC-003 or PRC-004.
Response: We agree. Please see the purpose statement as stated in the SAR.	
SOCO Transmission	In the SAR you state "The revised PRC-005 standard should address the issues raised in the FERC Order 693". With the exception of mentioning the consolidation of the standards into one standard, the SAR drafting team didn't provide readers with the exact language from FERC that would be useful to know with respect to PRC-005 in the directive below: The Commission directs the ERO to develop a modification to PRC-005-1 through the Reliability Standards development process that includes a requirement that maintenance and testing of a protection system must be carried out within a maximum allowable interval that is appropriate to the type of the protection system and its impact on the reliability of the Bulk-Power System. We further direct the ERO to consider FirstEnergy's and ISO-NE's suggestion to combine PRC-005-1, PRC-008-0,

Question #6	
Commenter	**Comment**
	PRC-011-0 and PRC-017-0 into a single Reliability Standard through the Reliability Standards development process.
Response: The SAR DT Agrees – the SAR DT will make sure that all appropriate documents are included in its next posting of the SAR.	
MRO	1. The MRO commends NERC and the SDT for taking steps to remove some of the redundancy that currently exists among many of the standards today. The consolidation of the protection system maintenance and testing standards is a good first step. 2. The MRO requests that the following be considered during the initial drafting of the Requirements for this new protection and maintenance standard. A minimum set of evidence to be included in a maintenance and testing program should be established in the measures for R1.2. 3. In the SPCTF Assessment of PRC-005-1, PRC-008-0, PRC-011-0, and PRC-017-0, the clarification for R2 states that documentation is available to its Regional Reliability Organization and NERC during audits or upon request within 30 days but paragraph 1545 of FERC Order 693 states "be routinely provided to the ERO or Regional Entity and not only when it is requested." The MRO believes that the FERC request would be satisfied if the standard were to state: "the applicable entities shall provide testing records to the Regional Entity on a periodic basis e.g. (annually). 4. In the event that the SAR DT does not become the SDT, the MRO requests that these comments be forwarded on to the group that will do tha actual drafting of the Standard.
Response: The SAR DT will forward your comments to the SDT for consideration as required by the process	
IRC IESO	1. The SRC (IESO) commends NERC, the SDT and the SPCTF for providing clarity and for efforts to reduce the costs of compliance. 2 In the Standard PRC-008-0, Generation Owners were not included in the applicable entities. Generation Owners may have underfrequency tripping devices for protection of their units. It would be appropriate to include these devices for maintenance and testing requirements also. 3. Further, there is need to specify which types of relays will be covered by the new standard. The SAR Team needs to focus on better defining the Generator Protection Schemes ("GPS") that are critical to bulk power system operation, as distinct from generator operation. For example, a single generating unit may experience contingency events that would not result in any significant adverse impacts outside the local area in which the single generating unit is located. As a result, there remains a need to subject those GPSs that are important to the Bulk Power System, such as generator underfrequency trip settings, to the maintenance testing intervals to be derived in these standards. 4. Certain unavoidable delays like the inability to schedule outages for reliability reasons, labor

Question #6	
Commenter	**Comment**
	disputes, or force-majeure conditions could affect testing period requirements. These factors should be considered and certain latitude needs to be provided for delays in the testing process. 5. However, the SAR team needs to also consider, as part of its scope, assurance that the asset owner has taken all appropriate steps to assure that required outages are appropriately planned and can be reasonably accommodated and approved by the TOP or RC.
Response: 1.Thank you **2.** Generator owners are included in the SAR **3.** This comment will be forwarded to the SDT **4.** The compliance enforcement program does give the compliance monitor latitude to consider extenuating circumstances. **5.** There are other standards that require coordination of comments	
FRCC	There are many standards being addressed (Disturbance Monitoring, System Protection Coordination, Reliability Coordination, along with Regional standard developments). As these standards are integrated into PRC-005, the existing and new terminology should be consistently applied in all system protection standards (with respect to defined terms). Where terms are undefined or being revised, the drafting team should carefully consider the terms used to ensure coordination of revised or new definitions with other Reliability standards or flag conflicts within the implementation plan.
Response: Thank you for your comment, your observation will be forwarded to the SDT for consideration.	
NPCC CP9 RSWG HQT	Due consideration should be given to potential difficulties in obtaining required outages. System reliability concerns may preclude performing maintenance at the intervals required. Certain unavoidable delays like the inability to schedule outages for reliability reasons, labor disputes, or force-majeure conditions could affect testing period requirements. These factors should be considered and certain latitude needs to be provided, with "appropriate" approvals, for delays in the testing process. There is need to specify which types of relays will be covered by the new standard. The SAR Team needs to focus on better defining the Generator Protection Schemes ("GPS") that would be subject to this Standard – i.e., what subset of GPS are critical to bulk power system operation, as distinct from generator operation. For example, typically there is no single generating unit that would, if a contingency event occurs on that generating unit, result in significant adverse impacts outside of the local area in which the single generating unit is located. As a result, if these NERC Standards are to apply to all NERC-registered Generators, only a subset of the GPS need to be subjected to the maintenance testing intervals.
Response: 1. The compliance enforcement program does give the compliance monitor latitude to consider extenuating circumstances.	

Question #6	
Commenter	**Comment**
2 Your second comment will be forwarded to the SDT for consideration	
Manitoba Hydro	Manitoba Hydro takes exception to the prescriptive nature of the proposed changes to the maintenance procedures and maintenance intervals. The type of maintenance performed and the minimum maintenance intervals should be determined by the utility within the operating context of the protection system. There is no need for the standard to reflect the inherent difference between various protection system technologies as the utility would account for differences within their stated maintenance practices.
Response: The proposed changes will improve clarity which should benefit reliability. While Manitoba Hydro may have an excellent record of maintenance, the existing standards are quite vague and allow an entity that performs maintenance once every 100 years to be fully compliant.	
Pepco Holdings	This SAR will bring needed coherence to what are now several related standards.
Response: Thank you	
SRP	None.
PSC SC	N/A
Consumers Energy	None.
SWTC	N/A
FirstEnergy	None.

NERC
NORTH AMERICAN ELECTRIC
RELIABILITY CORPORATION

Maureen E. Long
Standards Process Manager

August 15, 2007

TO: REGISTERED BALLOT BODY

Ladies and Gentlemen:

Announcement: Nomination Periods Open for Three Drafting Teams

The Standards Committee announces the following standards actions:

Nominations for Project 2006-01 System Personnel Training Standard Drafting Team (August 15–29, 2007)

The Standards Committee is seeking additional industry experts to serve on the System Personnel Training Standard Drafting Team. The new members will join the already-formed drafting team in developing the following standard:

- PER-005 — System Personnel Training

If you are interested in serving on this standard drafting team, please complete this nomination form and return it to sarcomm@nerc.net by August 29, 2007 with "System Personnel Training SDT" in the subject line. For questions, please contact Linda Clarke at 610-310-7210 or linclrke@msn.com.

Nominations for Project 2007-06 System Protection Coordination Standard Drafting Team (August 15–29, 2007)

The Standards Committee is seeking industry experts to serve on the System Protection Coordination Standard Drafting Team. The drafting team will work on modifications to the following standard:

- PRC-001 — System Protection Coordination

If you are interested in serving on this standard drafting team, please complete this nomination form and return it to sarcomm@nerc.net by August 29, 2007 with "System Protection Coordination SDT" in the subject line. For questions, please contact Al Calafiore at 678-524-1188 or at al.calafiore@nerc.net.

Nominations for Project 2007-17 Protection System Maintenance and Testing Standard Drafting Team (August 15–29, 2007)

The Standards Committee is seeking industry experts to serve on the Protection System Maintenance and Testing Standard Drafting Team. If you are interested in serving on this team, please complete this nomination form and return it to sarcomm@nerc.net with "Protection System Maintenance SDT" in the subject line by August 29, 2007. For questions, please contact Al Calafiore at 678-524-1188 or at al.calafiore@nerc.net.

116-390 Village Boulevard, Princeton, New Jersey 08540-5721
Phone: 609.452.8060 ▪ Fax: 609.452.9550 ▪ www.nerc.com

The drafting team will work on revising the following standards:

- PRC-005-1 — Transmission and Generation Protection System Maintenance and Testing
- PRC-008-0 — Underfrequency Load Shedding Equipment Maintenance Programs
- PRC-011-0 — UVLS System Maintenance and Testing
- PRC-017-0 — Special Protection System Maintenance and Testing

Standards Development Process

The *Reliability Standards Development Procedure* contains all the procedures governing the standards development process. The success of the NERC standards development process depends on stakeholder participation. We extend our thanks to all those who participate. If you have any questions, please contact me at 813-468-5998 or maureen.long@nerc.net.

Sincerely,

Maureen E. Long

cc: Registered Ballot Body Registered Users
Standards Mailing List
NERC Roster

NERC
NORTH AMERICAN ELECTRIC
RELIABILITY CORPORATION

Nomination Form for Protection System Maintenance and Testing Standard Drafting Team (Project 2007-17)

Please return this form to sarcomm@nerc.net by August 29, 2007 with the words "Protection System Maintenance SDT" in the subject line. If you have questions please contact al.calafiore@nerc.net or at 678-524-1188.

All candidates should be prepared to participate actively at these meetings.

Name: Organization: Address: Office Telephone: E-mail:
Please briefly describe your experience and qualifications to serve on the Protection System Maintenance and Testing Standard Drafting Team. Candidates should have experience in developing, managing or supporting a maintenance program or a testing program for one or more of the following: - **Generator protection systems** - **Transmission protection systems** - **Underfrequency load shedding equipment** - **Undervoltage load shedding equipment** - **Special protection systems** **Previous experience working on or applying NERC or IEEE standards is beneficial, but not a requirement.**

I represent the following NERC Reliability Region(s) (check all that apply):	**I represent the following Industry Segment (check one):**	
☐ ERCOT	☐	1 — Transmission Owners
☐ FRCC	☐	2 — RTOs, ISOs
☐ MRO	☐	3 — Load-serving Entities
☐ NPCC	☐	4 — Transmission-dependent Utilities
☐ RFC	☐	5 — Electric Generators
☐ SERC	☐	6 — Electricity Brokers, Aggregators, and Marketers
☐ SPP	☐	7 — Large Electricity End Users
☐ WECC	☐	8 — Small Electricity End Users
☐ NA – Not Applicable	☐	9 — Federal, State, and Provincial Regulatory or other Government Entities
	☐	10 — Regional Reliability Organizations and Regional Entities

Which of the following Function(s)[1] do you have expertise or responsibilities:

☐ Balancing Authority	☐ Planning Coordinator
☐ Compliance Monitor	☐ Transmission Operator
☐ Distribution Provider	☐ Transmission Owner
☐ Generator Operator	☐ Transmission Planner
☐ Generator Owner	☐ Transmission Service Provider
☐ Interchange Authority	☐ Purchasing-selling Entity
☐ Load-serving Entity	☐ Resource Planner
☐ Market Operator	☐ Reliability Coordinator

Provide the names and contact information for two references who could attest to your technical qualifications and your ability to work well in a group.

Name:	Office Telephone:
Organization:	E-mail:
Name:	Office Telephone:
Organization:	E-mail:

[1] These functions are defined in the NERC Functional Model, which is downloadable from the NERC Web site: http://www.nerc.com/~filez/functionalmodel.html

Standard Development Roadmap

This section is maintained by the drafting team during the development of the standard and will be removed when the standard becomes effective.

Development Steps Completed:

1. Standards Committee approves SAR for posting on June 5, 2007.
2. The SAR was posted for comment from June 11, 2007–July 10, 2007.
3. The SC approves development of the standard on August 13, 2007.
4. Drafting team posts first draft for comments (July 23, 2009).

Description of Current Draft:
This is the initial draft of the Standard. This standard merges previous standards PRC-005-0, PRC-008-0, PRC-011-0, and PRC-017-0. It also addresses FERC comments from Order 693, and addresses observations from the NERC System Protection and Control Task Force, as presented in *NERC SPCTF Assessment of Standards: PRC-005-1 — Transmission and Generation Protection System Maintenance and Testing, PRC-008-0 — Underfrequency Load Shedding Equipment Maintenance Programs, PRC-011-0 — UVLS System Maintenance and Testing, PRC-017-0 — Special Protection System Maintenance and Testing.*

Future Development Plan:

Anticipated Actions	Anticipated Date
1. Post response to comments and second draft of standard and associated documents.	To be determined.

Definitions of Terms Used in Standard

This section includes all newly defined or revised terms used in the proposed standard. Terms already defined in the Reliability Standards Glossary of Terms are not repeated here. New or revised definitions listed below become approved when the proposed standard is approved. When the standard becomes effective, these defined terms will be removed from the individual standard and added to the Glossary.

Protection System Maintenance Program (PSMP) — An ongoing program by which Protection System components are kept in working order and proper operation of malfunctioning components is restored. A maintenance program can include:

- Verification — A means of determining that the component is functioning correctly.
- Monitoring — Observation of the routine in-service operation of the component.
- Testing — Application of signals to a component to observe functional performance or output behavior, or to diagnose problems.
- Physical inspection — To detect visible signs of component failure, reduced performance and degradation.
- Calibration — Adjustment of the operating threshold or measurement accuracy of a measuring element to meet the intended performance requirement.
- Upkeep — Routine activities necessary to assure that the component remains in good working order and implementation of any manufacturer's hardware and software service advisories which are relevant to the application of the device.
- Restoration — The actions to restore proper operation of malfunctioning components.

Protection System (modification) — Protective relays, associated communication systems necessary for correct operation of protective devices, voltage and current sensing inputs to protective relays, station DC supply, and DC control circuitry from the station DC supply through the trip coil(s) of the circuit breakers or other interrupting devices.

A. Introduction

1. **Title:** **Protection System Maintenance**

2. **Number:** **PRC-005-2**

3. **Purpose:** To ensure all transmission and generation Protection Systems affecting the reliability of the Bulk Electric System (BES) are maintained.

4. **Applicability:**

   4.1. Functional Entities:

   4.1.1 Transmission Owners

   4.1.2 Generator Owners

   4.1.3 Distribution Providers

   4.2. Facilities:

   4.2.1 Protection Systems that are applied on, or are designed to provide protection for the BES.

   4.2.2 Protection System components used for underfrequency load-shedding systems which are installed per ERO underfrequency load-shedding requirements.

   4.2.3 Protection System components used for undervoltage load-shedding systems which are installed to prevent system voltage collapse or voltage instability for BES reliability.

   4.2.4 Protection System components which is installed as a Special Protection System for BES reliability.

   4.2.5 Protection Systems for Generator Facilities that are part of the BES, including:

   4.2.5.1 Protection system components that act to trip the generator either directly or via generator lockout or auxiliary tripping relays.

   4.2.5.2 Protection systems for generator step-up transformers for generators that are part of the BES.

   4.2.5.3 Protection systems for transformers connecting aggregated generation, where the aggregated generation is part of the BES (e.g., transformers connecting facilities such as wind-farms to the BES).

   4.2.5.4 Protection systems for generator-connected station service transformers for generators that are part of the BES.

   4.2.5.5 Protection systems for system-connected station service transformers for generators that are part of the BES.

5. **(Proposed) Effective Date:** **TBD**

B. Requirements

R1. Each Transmission Owner, Generator Owner, and Distribution Provider shall establish a Protection System Maintenance Program (PSMP) for its Protection Systems that use measurements of voltage, current, frequency and/or phase angle to determine anomalies and to trip a portion of the BES[1] and that are applied on, or are designed to provide protection for the BES. The PSMP shall meet the following criteria: *[Violation Risk Factor: TBD] [Time Horizon: Long Term Planning]*

1.1. For each component used in each Protection System, include all maintenance activities specified in Tables 1a, 1b, and 1c.

1.2. Identify whether each Protection System component is addressed through time-based, condition-based, performance-based, or a combination of these maintenance methods and identify the associated maintenance interval.

1.3. Include all batteries associated with a Protection System in a time-based program.

R2. Each Transmission Owner, Generator Owner, and Distribution Provider that uses condition-based maintenance intervals in its PSMP for partially or fully monitored Protection Systems shall ensure the components to which the condition-based criteria are applied (as specified in Tables 1b or 1c), possess the necessary monitoring attributes. *[Violation Risk Factor: TBD] [Time Horizon: Long Term Planning]*

R3. Each Transmission Owner, Generator Owner, and Distribution Provider that uses performance-based maintenance intervals in its PSMP shall follow the procedure established in PRC-005 Attachment A. *[Violation Risk Factor: TBD] [Time Horizon: Long Term Planning]*

R4. Each Transmission Owner, Generator Owner, and Distribution Provider shall implement its PSMP, including identification of the resolution of all maintenance correctible issues[2] as follows: *[Violation Risk Factor: TBD] [Time Horizon: Long Term Planning]*

4.1. For time-based or condition-based maintenance programs perform the Maintenance activities detailed in Table 1 (for the appropriate monitoring level(s)) for all Protection System components within maximum allowable intervals not to exceed those established in Tables 1a, 1b, and 1c.

4.2. For performance-based maintenance programs perform the maintenance activities detailed in Table 1 (for the appropriate monitoring level(s)) for all Protection System components in accordance within the maximum allowable intervals established per Requirement R3.

C. Measures (TBD)

[1] Devices that sense non-electrical conditions, such as thermal or transformer sudden pressure relays, are not included within the scope of this standard**.**

[2] A maintenance correctable issue is a failure of a device to operate within design parameters that can be restored to functional order by calibration, repair or replacement.

D. Compliance

1. Compliance Monitoring Process

1.1. Compliance Monitoring Responsibility

Regional Entity

1.2. Compliance Monitoring Period and Reset Time Frame

Not Applicable.

1.3. Compliance Monitoring and Enforcement Processes:

Compliance Audits

Self-Certifications

Spot Checking

Compliance Violation Investigations

Self-Reporting

Complaints

1.4. Data Retention

The Transmission Owner, Generator Owner, and Distribution Provider shall each retain documentation for two maintenance intervals for the Protection System components.

The Compliance Enforcement Authority shall keep the last periodic audit report and all requested and submitted subsequent compliance records.

1.5. Additional Compliance Information

2. Violation Severity Levels — TBD

E. Regional Differences

None

F. Supplemental Reference Documents

The following documents present a detailed discussion about determination of maintenance intervals and other useful information regarding establishment of a maintenance program.

1. PRC-005-2 Protection System Maintenance Supplementary Reference — July 2009.
2. NERC Protection System Maintenance Standard PRC-005-2 FREQUENTLY ASKED QUESTIONS — Practical Compliance and Implementation DRAFT 1.0 — June 2009

Version History

Version	Date	Action	Change Tracking

Table 1a — Level 1 Monitoring Maximum Allowable Testing Intervals and Maintenance Activities for Unmonitored Protection Systems **General Description:** Protection System components which do not have self-monitoring alarms, or if self-monitoring alarms are available, the alarms are not transmitted to a location where action can be taken for alarmed failures.		
Type of Component	**Maximum Maintenance Interval**	**Maintenance Activities**
Protective Relays	6 Calendar Years	Test and calibrate the relays (other than microprocessor relays) with simulated electrical inputs. (Note 1) Verify proper functioning of the relay trip outputs. For microprocessor relays verify proper functioning of the A/D converters (Note 2) Verify that settings are as specified.
Voltage and Current Sensing Devices Inputs to Protective Relays	12 Calendar Years	Verify proper functioning of the current and voltage circuit inputs from the voltage and current sensing devices to the protective relays
Protection System Control Circuitry (Breaker Trip Coil Only) (except for UFLS or UVLS)	3 Months	Verify the continuity of the breaker trip circuit including trip coil (except for protection system control circuitry associated with breakers that remain open for the entire “maintenance interval” period”)
Protection System Control Circuitry (Trip Circuits) (except for UFLS or UVLS)	6 Calendar Years	Perform a complete functional trip test that includes all sections of the Protection System trip circuit, including all auxiliary contacts essential to proper functioning of the Protection System.
Protection System Control Circuitry (Trip Circuits) (UFLS/UVLS Systems Only)	(when the associated UVLS or UFLS system is maintained)	Perform a complete functional trip test that includes all sections of the Protection System trip circuit, including all auxiliary contacts essential to proper functioning of the Protection System.

Table 1a — Level 1 Monitoring Maximum Allowable Testing Intervals and Maintenance Activities for Unmonitored Protection Systems **General Description:** Protection System components which do not have self-monitoring alarms, or if self-monitoring alarms are available, the alarms are not transmitted to a location where action can be taken for alarmed failures.		
Type of Component	**Maximum Maintenance Interval**	**Maintenance Activities**
Station dc supply (that has as a component any type of battery)	3 Months	Verify proper electrolyte level (excluding valve-regulated lead acid batteries). Verify proper voltage of the station battery. Verify that no dc supply grounds are present.
Station dc supply (that has as a component any type of battery)	18 Months	Verify proper voltage of each individual cell or unit in the station battery. Verify that station battery charger provides the correct float and equalize voltages. Verify continuity and cell integrity of entire battery. Perform a visual cell inspection of all cells for “cell condition” (where cells are visible) or measurement of cell/unit internal ohmic values (where cells are not visible). Measure that specific gravity and temperature of each cell is within tolerance(where applicable) Verify cell to cell and terminal connection resistance is within tolerance Inspect the structural integrity of the battery rack.
Station dc supply (that has as a component Valve Regulated Lead-Acid batteries)	3 Calendar Years - or - 3 Months	Verify that the station battery can perform as designed by conducting a performance or service capacity test of the entire battery bank. (3 calendar years) - or - Verify that the station battery can perform as designed by evaluating the measured cell/unit internal ohmic values to station battery baseline. (3 months)

Table 1a — Level 1 Monitoring Maximum Allowable Testing Intervals and Maintenance Activities for Unmonitored Protection Systems **General Description:** Protection System components which do not have self-monitoring alarms, or if self-monitoring alarms are available, the alarms are not transmitted to a location where action can be taken for alarmed failures.		
Type of Component	**Maximum Maintenance Interval**	**Maintenance Activities**
Station dc supply (that has as a component Vented Lead-Acid Batteries)	6 Calendar Years - or - 18 Months	Verify that the station battery can perform as designed by conducting a performance, service, or modified performance capacity test of the entire battery bank. (6 calendar years) - or - Verify that the station battery can perform as designed by evaluating the measured cell/unit internal ohmic values to station battery baseline. (18 Months)
Station dc supply (that has as a component Nickel-Cadmium batteries)	6 Calendar Years	Verify that the substation battery can perform as designed by conducting a performance service, or modified performance capacity test of the entire battery bank.
Station dc supply (that uses a battery and charger)	6 Calendar Years	Verify that the battery charger can perform as designed by testing that the charger will provide full rated current and will properly current-limit.
Station dc Supply (battery is not used)	18 Months	Verify proper voltage of the station dc supply Verify that no dc supply grounds are present. Perform a visual inspection, of all components of the station dc supply to verify that the physical condition of the station dc supply is as desired and any visual inspection if required by the manufacturer on the condition of the dc supply that is the source of dc power when ac power is unavailable. Verify where applicable the proper voltage level of each component of the station dc supply. Verify the correct operation of ac powered dc power supplies. Verify the continuity of all circuit connections that can be affected by wear or corrosion.
Station dc Supply (used only for UVLS or UFLS)	(when the associated UVLS or UFLS system is maintained)	Verify proper voltage of the dc supply.

Table 1a — Level 1 Monitoring Maximum Allowable Testing Intervals and Maintenance Activities for Unmonitored Protection Systems **General Description:** Protection System components which do not have self-monitoring alarms, or if self-monitoring alarms are available, the alarms are not transmitted to a location where action can be taken for alarmed failures.		
Type of Component	**Maximum Maintenance Interval**	**Maintenance Activities**
Protection system communications equipment and channels.	3 Months	Verify that the Protection System communications monitoring and alarms reflect the intended communications system condition by means of a substation inspection.
Protection system communications equipment and channels.	6 Calendar Years	Verify that the performance of the channel and the quality of the channel meets performance criteria, such as via measurement of signal level, reflected power, or data error rate. Verify proper functioning of communications equipment outputs.
UVLS and UFLS relays that comprise a protection scheme distributed over the power system	6 Calendar Years	Test and calibrate the relays (other than microprocessor relays) with simulated electrical inputs. (Note 1) Verify proper functioning of the relay trip outputs. For microprocessor relays verify the proper functioning of the A/D converters (Note 2) Verify that settings are as specified.
Relay sensing for Centralized UFLS or UVLS systems	See Maintenance Activities	Perform all of the Maintenance activities listed above as established for components of the UFLS or UVLS systems at the intervals established for those individual components. The output action may be breaker tripping, or other control action that must be verified, but may be verified in overlapping segments. A grouped output control action need be verified only once within the specified time interval, but all of the UFLS or UVLS components whose operation leads to that control action must each be verified.
SPS	See Maintenance Activities	Perform all of the Maintenance activities listed above as established for components of the SPS at the intervals established for those individual components. The output action may be breaker tripping, or other control action that must be verified, but may be verified in overlapping segments. A grouped output control action need be verified only once within the specified time interval, but all of the SPS components whose operation leads to that control action must each be verified.

Table 1b — Condition-Based Maintenance - Level 2 Monitoring Maximum Allowable Testing Intervals and Maintenance Activities for Partially Monitored Protection System Components **General Description:** Protection System components whose alarms are automatically provided daily (or more frequently) to a location where action can be taken for alarmed failures. Monitoring includes all elements of level 1 monitoring with additional monitoring attributes as listed below for the individual type of component.			
Type of Component	**Level 2 Monitoring Attributes for Component**	**Maximum Maintenance Interval**	**Maintenance Activities**
Protective Relays	Includes internal self diagnosis and alarm capability, which must assert for power supply failures. Includes input voltage or current waveform sampling three or more times per power cycle, and conversion of samples to numeric values for measurement calculations by microprocessor electronics that are also performing self diagnosis and alarming.	12 Calendar Years	Verify the status of relays is normal with no alarms indicated. Verify the proper functioning of the A/D converters within the relay by testing or comparing values against other devices. Verify proper functioning of the relay trip outputs. Verify that settings are as specified. Verify that the relay alarms will be received at the location where action can be taken. See Note 2.
Voltage and Current Sensing Devices - Inputs to Protective Relays	No Level 2 monitoring attributes are defined – use Level 1 Maintenance Activities	12 Calendar Years	Verify the proper functioning of current and voltage circuit inputs from the voltage and current sensing devices to the protective relays
Protection System Control Circuitry (Trip Coils and Auxiliary Relays)	No Level 2 monitoring attributes are defined – use Level 1 Maintenance Activities and intervals	6 Calendar Years	Verify that each breaker trip coil, each auxiliary relay, and each lockout relay is electrically operated within this time interval.
Protection System Control Circuitry (Trip Circuits) (except for UFLS/UVLS)	Monitoring and alarming of continuity of trip coil(s)	12 Calendar Years	Perform a complete functional trip test that includes all sections of the Protection System trip circuit, including all auxiliary contacts essential to proper functioning of the Protection System. Verify that the relay alarms will be received at the location where action can be taken.

Table 1b — Condition-Based Maintenance - Level 2 Monitoring Maximum Allowable Testing Intervals and Maintenance Activities for Partially Monitored Protection System Components **General Description:** Protection System components whose alarms are automatically provided daily (or more frequently) to a location where action can be taken for alarmed failures. Monitoring includes all elements of level 1 monitoring with additional monitoring attributes as listed below for the individual type of component.			
Type of Component	**Level 2 Monitoring Attributes for Component**	**Maximum Maintenance Interval**	**Maintenance Activities**
Protection System Control Circuitry (Trip Circuits) (UFLS/UVLS Systems Only)	Monitoring and alarming of continuity of trip coil(s)	(when the associated UVLS or UFLS system is maintained)	Perform a complete functional trip test that includes all sections of the Protection System trip circuit, including all auxiliary contacts essential to proper functioning of the Protection System. (Verification does not require actual tripping of circuit breakers or interrupting devices.) Verify that the relay alarms will be received at the location where action can be taken.
Station dc supply (that has as a component any type of battery)	Monitoring and alarming of the station dc supply voltage. Detection and alarming of dc grounds.	3 Months	Verify proper electrolyte level (excluding Valve-Regulated Lead Acid batteries).
Station dc supply (that has as a component any type of battery)	Monitoring and alarming of the station dc supply voltage. Detection and alarming of dc grounds.	18 Months	Verify proper voltage of each individual cell or unit in the station battery. Verify that station battery charger provides the correct float and equalize voltages. Verify electrical continuity of the entire battery. Perform a visual cell inspection of all cells for “cell condition” (where cells are visible) or measurement of cell/unit internal ohmic values. (where cells are not visible) Measure that specific gravity and temperature of each cell is within tolerance. (where applicable) Verify cell to cell and terminal connection resistance is within tolerance. Inspect the structural integrity of the battery rack. Verify that the battery voltage and dc supply ground alarms will be received at the location where action can be taken.

Table 1b — Condition-Based Maintenance - Level 2 Monitoring Maximum Allowable Testing Intervals and Maintenance Activities for Partially Monitored Protection System Components **General Description:** Protection System components whose alarms are automatically provided daily (or more frequently) to a location where action can be taken for alarmed failures. Monitoring includes all elements of level 1 monitoring with additional monitoring attributes as listed below for the individual type of component.			
Type of Component	**Level 2 Monitoring Attributes for Component**	**Maximum Maintenance Interval**	**Maintenance Activities**
Station dc supply (that has as a component Valve Regulated Lead-Acid batteries)	Monitoring and alarming of the station dc supply voltage. Detection and alarming of dc grounds.	3 Calendar Years - or - 3 Months	Verify that the station battery can perform as designed by conducting a performance or service capacity test of the entire battery bank. (3 calendar years) - or - Verify that the station battery can perform as designed by evaluating the measured cell/unit internal ohmic values to station battery baseline. (3 months)
Station dc supply (that has as a component Vented Lead-Acid batteries)	Monitoring and alarming of the station dc supply voltage. Detection and alarming of dc grounds.	6 Calendar Years - or - 18 Months	Verify that the substation battery can perform as designed by conducting a performance service, or modified performance capacity test of the entire battery bank. (6 calendar years) - or - Verify that the station battery can perform as designed by evaluating the measured cell/unit internal ohmic values to station battery baseline. (18 Months)
Station dc supply (that has as a component Nickel-Cadmium batteries)	Monitoring and alarming of the station dc supply voltage. Detection and alarming of dc grounds.	6 Calendar Years	Verify that the substation battery can perform as designed by conducting a performance service, or modified performance capacity test of the entire battery bank.
Station dc supply (that uses a battery and charger)	Monitoring and alarming of the station dc supply voltage. Detection and alarming of dc grounds.	6 Calendar Years	Verify that the battery charger can perform as designed by testing that the charger will provide full rated current and will properly current-limit.

Table 1b — Condition-Based Maintenance - Level 2 Monitoring Maximum Allowable Testing Intervals and Maintenance Activities for Partially Monitored Protection System Components **General Description:** Protection System components whose alarms are automatically provided daily (or more frequently) to a location where action can be taken for alarmed failures. Monitoring includes all elements of level 1 monitoring with additional monitoring attributes as listed below for the individual type of component.			
Type of Component	**Level 2 Monitoring Attributes for Component**	**Maximum Maintenance Interval**	**Maintenance Activities**
Station dc Supply (battery is not used)	Monitoring and alarming of the station dc supply voltage. Detection and alarming of dc grounds.	18 Months	Verify proper voltage of the station dc supply, and where applicable, of each component of the station dc supply. Verify the proper operation of ac powered dc power supplies. Verify the continuity of all circuit connections that can be affected by wear or corrosion. Perform a visual inspection, of all components of the station dc supply to verify that the physical condition of the station dc supply is as desired and any visual inspection if required by the manufacturer on the condition of the dc supply that is the source of dc power when ac power is unavailable. Verify that the station dc supply voltage and dc supply ground alarms will be received at a location where action can be taken.
Station dc Supply (used only for UVLS or UFLS)	No Level 2 monitoring attributes are defined – use Level 1 Maintenance Activities and intervals	(when the associated UVLS or UFLS system is maintained)	Verify proper voltage of the dc supply
Protection system communications equipment and channels.	Monitoring and alarming of protection communications system by mechanisms that check for presence of the communications channel.	12 Calendar Years	Verify that the performance of the channel and the quality of the channel meets performance criteria, such as via measurement of signal level, reflected power, or data error rate. Verify proper functioning of communications equipment outputs. Verify proper functioning of alarm notification.

Table 1b — Condition-Based Maintenance - Level 2 Monitoring Maximum Allowable Testing Intervals and Maintenance Activities for Partially Monitored Protection System Components **General Description:** Protection System components whose alarms are automatically provided daily (or more frequently) to a location where action can be taken for alarmed failures. Monitoring includes all elements of level 1 monitoring with additional monitoring attributes as listed below for the individual type of component.			
Type of Component	**Level 2 Monitoring Attributes for Component**	**Maximum Maintenance Interval**	**Maintenance Activities**
UVLS and UFLS relays that comprise a protection scheme distributed over the power system.	Includes internal self diagnosis and alarm capability, which must assert for power supply failures. Includes input voltage or current waveform sampling three or more times per power cycle, and conversion of samples to numeric values for measurement calculations by microprocessor electronics that are also performing self diagnosis and alarming.	12 Calendar Years	Verify the status of relays as in service with no alarms. Verify the proper function of the A/D converters (if included in relay). Verify proper functioning of the relay trip outputs. Verify that settings are as specified. Verify that the relay alarms will be received at the location where action can be taken.
Relay sensing for centralized UFLS or UVLS systems.	See the attributes of Level 1 Monitoring for the individual components of the SPS	See Maintenance Intervals for the individual components of the UFLS/UVLS	Perform all of the Maintenance activities listed above as established for components of the UFLS or UVLS systems at the intervals established for those individual components. The output action may be breaker tripping, or other control action that must be verified, but may be verified in overlapping segments. A grouped output control action need be verified only once within the specified time interval, but all of the UFLS or UVLS components whose operation leads to that control action must each be verified.
SPS	See the attributes of Level 1 Monitoring for the individual components of the SPS	See Maintenance Intervals for the individual components of the SPS	Perform all of the Maintenance activities listed above as established for components of the SPS, at the intervals established for those individual components. The output action may be breaker tripping, or other control action that must be verified, but may be verified in overlapping segments. A grouped output control action need be verified only once within the specified time interval, but all of the SPS components whose operation leads to that control action must each be verified.

Table 1c — Condition-based Maintenance — Level 3 Monitoring Maximum Allowable Testing Intervals and Maintenance Activities for Fully Monitored Protection Systems **General Description:** Protection System components in which every function required for correct operation of that component is continuously monitored and verified, and detected maintenance-correctable issues reported. Level 3 Monitored Protection Systems also includes verification of the means by which alarms and monitored values are transmitted to a location where action can be taken. Detected maintenance-correctable issues for Level 3 Monitored Protection Systems must be reported within 1 hour or less of the maintenance-correctable issue occurring, to a location where action can be taken. Level 3 Monitoring includes all elements of Level 2 Monitoring, with additional monitoring attributes as listed below for the individual type of component.			
Type of Component	**Level 3 Monitoring Attributes for Component**	**Maximum Maintenance Interval**	**Maintenance Activities**
Protective Relays	The relay A/D converters are continuously monitored and alarmed.	Continuous	Continuous verification of the status of the relays. (Note 2) Alarm on change of settings.
Protective Relays with trip contacts	All Level attributes, except relay possesses mechanical output contacts.	12 Calendar Years	Verify proper functioning of the relay trip contacts.
Voltage and Current Sensing Devices Inputs to Protective Relays	Verification of the ac analog values (magnitude and phase angle) measured by the microprocessor relay or comparable device, by comparing against other measurements using other instrument transformers.	Continuous	Continuous verification and comparison of the current and voltage signals from the voltage and current sensing devices of the Protection System.
Protection System Control Circuitry (Trip Coils and Auxiliary Relays)	No Level 3 monitoring attributes are defined – use Level 2 Maintenance Activities and intervals	6 Calendar Years	Each breaker trip coil, each auxiliary relay, and each lockout relay must be electrically operated within this time interval.

Table 1c — Condition-based Maintenance — Level 3 Monitoring Maximum Allowable Testing Intervals and Maintenance Activities for Fully Monitored Protection Systems **General Description:** Protection System components in which every function required for correct operation of that component is continuously monitored and verified, and detected maintenance-correctable issues reported. Level 3 Monitored Protection Systems also includes verification of the means by which alarms and monitored values are transmitted to a location where action can be taken. Detected maintenance-correctable issues for Level 3 Monitored Protection Systems must be reported within 1 hour or less of the maintenance-correctable issue occurring, to a location where action can be taken. Level 3 Monitoring includes all elements of Level 2 Monitoring, with additional monitoring attributes as listed below for the individual type of component.			
Type of Component	**Level 3 Monitoring Attributes for Component**	**Maximum Maintenance Interval**	**Maintenance Activities**
Protection System Control Circuitry (Trip Circuits)	Monitoring of the continuity of breaker trip circuits (with alarming for non-continuity), along with the presence of tripping voltage supply all the way from relay terminals (or from inside the relay) through to the trip coil, including any auxiliary contacts essential to proper Protection System operation. If a trip circuit comprises multiple paths, each of the paths must be monitored, including monitoring of the operating coil circuit(s) and the tripping circuits of auxiliary tripping relays and lockout relays.	Continuous	Continuous monitoring of trip voltage and trip path integrity of entire trip circuit is provided with alarming to remote terminal unit upon any failure of the trip path.

Table 1c — Condition-based Maintenance — Level 3 Monitoring Maximum Allowable Testing Intervals and Maintenance Activities for Fully Monitored Protection Systems **General Description:** Protection System components in which every function required for correct operation of that component is continuously monitored and verified, and detected maintenance-correctable issues reported. Level 3 Monitored Protection Systems also includes verification of the means by which alarms and monitored values are transmitted to a location where action can be taken. Detected maintenance-correctable issues for Level 3 Monitored Protection Systems must be reported within 1 hour or less of the maintenance-correctable issue occurring, to a location where action can be taken. Level 3 Monitoring includes all elements of Level 2 Monitoring, with additional monitoring attributes as listed below for the individual type of component.			
Type of Component	**Level 3 Monitoring Attributes for Component**	**Maximum Maintenance Interval**	**Maintenance Activities**
Station dc Supply (any battery technology)	Monitoring and alarming the station dc supply status, including, for station dc supplies that have as a component a battery, the voltage, specific gravity, electrolyte level, temperature and connectivity (cell to cell and terminal connection resistance) of each cell as well as the battery system terminal voltage and electrical continuity of the overall battery system. Monitoring and alarming if the performance capability of the battery is degraded. Monitoring and alarming the ac powered dc power supply status including low and high voltage and charge rate for station dc supplies that have battery systems. Detection and alarming of dc grounds.	18 Months	Verify that station battery charger operation provides the correct float and equalize voltages Perform a visual inspection of the station battery and charger, individual cells (including electrolyte level), connections, and racks to verify that the physical condition of the battery is as desired, and that no associated alarm lamps are illuminated.

Table 1c — Condition-based Maintenance — Level 3 Monitoring Maximum Allowable Testing Intervals and Maintenance Activities for Fully Monitored Protection Systems **General Description:** Protection System components in which every function required for correct operation of that component is continuously monitored and verified, and detected maintenance-correctable issues reported. Level 3 Monitored Protection Systems also includes verification of the means by which alarms and monitored values are transmitted to a location where action can be taken. Detected maintenance-correctable issues for Level 3 Monitored Protection Systems must be reported within 1 hour or less of the maintenance-correctable issue occurring, to a location where action can be taken. Level 3 Monitoring includes all elements of Level 2 Monitoring, with additional monitoring attributes as listed below for the individual type of component.			
Type of Component	**Level 3 Monitoring Attributes for Component**	**Maximum Maintenance Interval**	**Maintenance Activities**
Station dc supply (that uses a battery and charger)	Monitoring and alarming the station dc supply status, including, for station dc supplies that have as a component a battery, the voltage, specific gravity, electrolyte level, temperature and connectivity (cell to cell and terminal connection resistance) of each cell as well as the battery system terminal voltage and electrical continuity of the overall battery system. Monitoring and alarming if the performance capability of the battery is degraded. Monitoring and alarming the ac powered dc power supply status including low and high voltage and charge rate for station dc supplies that have battery systems. Detection and alarming of dc grounds.	6 Calendar Years	Verify that the battery charger can perform as designed by testing that the charger will provide full rated current and will properly current-limit.

Table 1c — Condition-based Maintenance — Level 3 Monitoring

Maximum Allowable Testing Intervals and Maintenance Activities for Fully Monitored Protection Systems

General Description: Protection System components in which every function required for correct operation of that component is continuously monitored and verified, and detected maintenance-correctable issues reported. Level 3 Monitored Protection Systems also includes verification of the means by which alarms and monitored values are transmitted to a location where action can be taken. Detected maintenance-correctable issues for Level 3 Monitored Protection Systems must be reported within 1 hour or less of the maintenance-correctable issue occurring, to a location where action can be taken. Level 3 Monitoring includes all elements of Level 2 Monitoring, with additional monitoring attributes as listed below for the individual type of component.

Type of Component	Level 3 Monitoring Attributes for Component	Maximum Maintenance Interval	Maintenance Activities
Station dc Supply (battery is not used)	Monitoring and alarming the station dc supply status, including output voltage of the dc supply. Monitoring and alarming if the performance capability of the dc supply is degraded. Detection and alarming of dc grounds.	Continuous	Continuous verification of the status of the station dc supply and its ability to deliver dc power when required, is provided.
Station dc Supply (used only for UVLS or UFLS)	No Level 3 monitoring attributes are defined – use Level 2 Maintenance Activities and intervals	(when the associated UVLS or UFLS system is maintained)	Verify proper voltage of the dc supply
Protection system telecommunications equipment and channels.	Evaluating the performance of the channel and its interface to protective relays to determine the quality of the channel and alarming if the channel does not meet performance criteria	Continuous	Continuous verification that the performance and quality of the channel meets performance criteria is provided. Continuous verification of the communications equipment alarm system is provided.
UVLS and UFLS relays that comprise a protection scheme distributed over the power system.	The relay A/D converters are continuously monitored and alarmed.	Continuous	Continuous verification of the status of the relays. (Note 2) Alarm on change of settings. Verification does not require actual tripping of circuit breakers or interrupting devices.

Table 1c — Condition-based Maintenance — Level 3 Monitoring Maximum Allowable Testing Intervals and Maintenance Activities for Fully Monitored Protection Systems **General Description:** Protection System components in which every function required for correct operation of that component is continuously monitored and verified, and detected maintenance-correctable issues reported. Level 3 Monitored Protection Systems also includes verification of the means by which alarms and monitored values are transmitted to a location where action can be taken. Detected maintenance-correctable issues for Level 3 Monitored Protection Systems must be reported within 1 hour or less of the maintenance-correctable issue occurring, to a location where action can be taken. Level 3 Monitoring includes all elements of Level 2 Monitoring, with additional monitoring attributes as listed below for the individual type of component.			
Type of Component	**Level 3 Monitoring Attributes for Component**	**Maximum Maintenance Interval**	**Maintenance Activities**
Relay sensing for centralized UFLS or UVLS systems.	See the attributes of Level 3 Monitoring for the individual components of the UFLS/UVLS	See Maintenance Activities	Perform all of the Maintenance activities listed above as established for components of the UFLS or UVLS systems at the intervals established for those individual components. The output action may be breaker tripping, or other control action that must be verified, but may be verified in overlapping segments. A grouped output control action need be verified only once within the specified time interval, but all of the UFLS or UVLS components whose operation leads to that control action must each be verified.
SPS	See the attributes of Level 3 Monitoring for the individual components of the SPS	See Maintenance Activities	Perform all of the Maintenance activities listed above as established for components of the SPS at the intervals established for those individual components. The output action may be breaker tripping, or other control action that must be verified, but may be verified in overlapping segments. A grouped output control action need be verified only once within the specified time interval, but all of the SPS components whose operation leads to that control action must each be verified.

Notes for Table 1a, Table 1b, and Table 1c

1. For some Protection System components, adjustment is required to bring measurement accuracy within parameters established by the asset owner based on the specific application of the component. A calibration failure is the result if testing finds the specified parameters to be out of tolerance.
2. Microprocessor relays typically are specified by manufacturers as not requiring calibration, but power system input values must be verified as correct within the Table intervals. The integrity of the digital inputs and outputs will be verified with the Protection System Control Circuitry.

PRC-005 — Attachment A

Criteria for a Performance-Based Protection System Maintenance Program

Purpose: To establish a technical basis for initial and continued use of a performance-based Protection System Maintenance Program (PSMP).

Segment: In this procedure, the term, "segment" is a grouping of Protection Systems or component devices from a single manufacturer, with common factors such that consistent performance is expected across the entire population of the segment, and shall only be defined for a population of 60 or more individual components.[3]

To establish the technical justification for the initial use of a performance-based PSMP:

1. Develop a list with a description of components included in each designated segment of the Protection System component population.
2. Maintain the components in each segment according to the time-based maximum allowable intervals established in Table 1 until results of maintenance activities for the segment are available for a minimum of 30 individual components of the segment.
3. Document the maintenance program activities and results for each segment, including maintenance dates and countable events[4] for each included component.
4. Analyze the maintenance program activities and results for each segment to determine the overall performance of the segment and develop maintenance intervals.
5. Determine the maximum allowable maintenance interval for each segment such that the segment experiences countable events on no more than 4% of the components within the segment, for the greater of either the last 30 components maintained or all components maintained in the previous year.

To maintain the technical justification for the ongoing use of a performance-based PSMP:

1. At least annually, update the list of Protection System components and segments and/or description if any changes occur within the segment.
2. Perform maintenance on the greater of 5% of the components (addressed in the performance based PSMP) in each segment or 3 individual components within the segment in each year.
3. For the prior year, analyze the maintenance program activities and results for each segment to determine the overall performance of the segment.
4. If the components in a Protection System segment maintained through a performance-based PSMP experience 4% or more countable events, develop, document, and

[3] Entities with smaller populations of component devices may aggregate their populations to define a segment and shall share all attributes of a single performance-based program for that segment.
[4] Countable events include any failure of a component requiring repair or replacement, any condition discovered during the verification activities in Table 1a through Table 1c which requires corrective action, or a Misoperation attributed to hardware failure or calibration failure.

implement an action plan to reduce the countable events to less than 4% of the segment population within 3 years.

5. Using the prior year's data, determine the maximum allowable maintenance interval for each segment such that the segment experiences countable events on no more than 4% of the components within the segment, for the greater of either the last 30 components maintained or all components maintained in the previous year.

NERC
NORTH AMERICAN ELECTRIC RELIABILITY CORPORATION

Unofficial Comment Form for Protection System Maintenance and Testing (Project 2007-17)

Please **DO NOT** use this form. Please use the electronic comment form located at the link below to submit comments on the draft Protection System Maintenance and Testing. **Comments must be submitted by September 8, 2009**. If you have questions please contact Al Calafiore at Al.Calafiore@nerc.net or by telephone at 678-524-1188.

http://www.nerc.com/filez/standards/Protection_System_Maintenance_Project_2007-17.html

Background Information:
The draft standard combines the previous standards, PRC-005-1 — Transmission and Generation Protection System Maintenance and Testing, PRC-008-0 — Underfrequency Load Shedding Equipment Maintenance Program, PRC-011-0 — UVLS System Maintenance and Testing, and PRC-017-0 — Special Protection System Maintenance and Testing. It also addresses FERC directives from FERC Order 693, including that NERC establish maximum allowable maintenance intervals.

In accordance with the FERC directive, this draft standard establishes requirements for a time-based maintenance program, where all relevant devices are maintained according to prescribed maximum intervals. It further establishes requirements for a condition-based maintenance program, where the hands-on maintenance intervals are adjusted to reflect the known and reported condition of the relevant devices, and for a performance-based maintenance program, where the hands-on maintenance intervals are adjusted to reflect the historical performance of the relevant devices.

1. The Standard Drafting Team proposes to change the name of the draft standard from "Protection System Maintenance and Testing" to "Protection System Maintenance", and to include testing as one component of "Protection System Maintenance Program", which will be a defined term. Do you agree? If not, please explain in the comment area.

   ☐ Yes
   ☐ No
   Comments:

2. Within Table 1a, Table 1b, and Table 1c, the draft standard establishes specific minimum maintenance activities for the various types of devices defined within the definition of "Protection System". Do you agree with these minimum maintenance activities? If not, please explain in the comment area.

   ☐ Yes
   ☐ No
   Comments:

3. Within Table 1a, the draft standard establishes maximum allowable maintenance intervals for the various types of devices defined within the definition of "Protection System", where nothing is known about the in-service condition of the devices. Do you agree with these intervals? If not, please explain in the comment area.

   ☐ Yes

☐ No

Comments:

4. Within Tables 1b and 1c, the draft standard establishes parameters for condition-based maintenance, where the condition of the devices is known by means of monitoring within the substation or plant and the condition is reported. Do you agree with this approach? If not, please explain in the comment area.

☐ Yes

☐ No

Comments:

5. Within PRC-005 Attachment A, the draft standard establishes parameters for performance-based maintenance, where the historical performance of the devices is known and analyzed to support adjustment of the maximum intervals. Do you agree with this approach? If not, please explain in the comment area.

☐ Yes

☐ No

Comments:

6. The Standard Drafting Team has provided a "Supplementary Reference Document" to provide supporting discussion for the Requirements within the standard. Do you have any comments on the Supplementary Reference Document? Please explain in the comment area.

☐ Yes

☐ No

Comments:

7. The Standard Drafting Team has provided a "Frequently-asked Questions" document to address anticipated questions relative to the standard. Do you have any comments on the FAQ? Please explain in the comment area.

☐ Yes

☐ No

Comments:

8. If you are aware of any conflicts between the proposed standard and any regulatory function, rule, order, tariff, rate schedule, legislative requirement, or agreement please identify the conflict here.

Conflict:

Comments:

9. If you are aware of the need for a regional variance or business practice that we should consider with this project, please identify it here.

Regional Variance:

Business Practice:

Comments:

10. If you have any other comments on this Standard that you have not already provided in response to the prior questions, please provide them here.

    Comments:

Draft Implementation Plan for PRC-005-02

Background:
In developing the implementation plan, the Standard Drafting Team considered the following:

1. The requirements set forth in the proposed standard establish maximum allowable maintenance intervals for the first time. The established maximum allowable intervals may be shorter than those currently in use by some entities.
2. For entities using longer intervals than the maximum allowable intervals established in the proposed standard, it is unrealistic for those entities to be immediately in compliance with the new intervals. Further, entities should be allowed to become compliant in such a way as to facilitate a continuing maintenance program.
3. Until an entity is 100% compliant with PRC-005-2, the entity must be in compliance with PRC-005-1 for those components for which the implementation schedule for PRC-005-2 is not yet applicable.
4. Entities that have previously been performing maintenance within the newly specified intervals may not have all the documentation needed to demonstrate compliance with all of the maintenance activities specified.

Implementation plan for R1:

- Entities shall be 100% compliant on the first day of the first calendar quarter three months following applicable regulatory approvals, or in those jurisdictions where no regulatory approval is required, on the first day of the first calendar quarter three months following Board of Trustees adoption.

Implementation plan for R2, R3, and R4:

1. For Protection System Components with maximum allowable intervals of less than 1 year, as established in Table 1a,
    a. The entity shall be 100% compliant on the first day of the first calendar quarter 12 months following applicable regulatory approval, or in those jurisdictions where no regulatory approval is required, on the first day of the first calendar quarter 12 months following Board of Trustees adoption.

2. For Protection System Components with maximum allowable intervals 1 year or more, but 2 years or less, as established in Table 1a,
    a. The entity shall be 100% compliant on the first day of the first calendar quarter 2 calendar years following applicable regulatory approval, or in those jurisdictions where no regulatory approval is required, on the first day of the first calendar quarter 2 calendar years following Board of Trustees adoption.

3. For Protection System Components with maximum allowable intervals of 6 years, as established in Table 1a,
    a. The entity shall be 30% compliant on the first day of the first calendar quarter 2 calendar years following applicable regulatory approval, or in those jurisdictions where no regulatory approval is required, on the first day of the first calendar quarter 2 calendar years following Board of Trustees adoption.
    b. The entity shall be 60% compliant on the first day of the first calendar quarter 4 calendar years following applicable regulatory approval, or in those jurisdictions where no regulatory approval is required, on the first day of the first calendar quarter 4 calendar years following Board of Trustees adoption.
    c. The entity shall be 100% compliant on the first day of the first calendar quarter 6 calendar years following applicable regulatory approval, or in those jurisdictions where no regulatory approval is required, on the first day of the first calendar quarter 6 calendar years following Board of Trustees adoption.

4. For Protection System Components with maximum allowable intervals of 12 years, as established in Table 1a,
    a. The entity shall be 30% compliant on the first day of the first calendar quarter 4 calendar years following applicable regulatory approval, or in those jurisdictions where no regulatory approval is required, on the first day of the first calendar quarter 4 calendar years following Board of Trustees adoption.
    b. The entity shall be 60% compliant on the first day of the first calendar quarter following 8 calendar years following applicable regulatory approval, or in those jurisdictions where no regulatory approval is required, on the first day of the first calendar quarter 8 calendar years following Board of Trustees adoption.
    c. The entity shall be 100% compliant on the first day of the first calendar quarter 12 calendar years following applicable regulatory approval, or in those jurisdictions where no regulatory approval is required, on the first day of the first calendar quarter 12 calendar years following Board of Trustees adoption.

Applicability:
This standard applies to the following functional entities:

- Transmission Owners
- Generator Owners
- Distribution Providers

NERC

NORTH AMERICAN ELECTRIC RELIABILITY CORPORATION

PRC-005-2 Protection — System Maintenance Supplementary Reference (Draft 1)

Protection System Maintenance and Testing Standard Drafting Team

to ensure the reliability of the bulk power system

July, 2009

116-390 Village Blvd., Princeton, NJ 08540
609.452.8060 | 609.452.9550 fax
www.nerc.com

Table of Contents

1. Introduction and Summary 3
2. Need for Verifying Protection System Performance 3
2.1 Existing NERC Standards for Protection System Maintenance and Testing 3
2.2 Proposed Modification to NERC Glossary Definition 4
2.3 Applicability of New Protection System Maintenance Standards 4
2.4 Applicable Relays 4
3. Relay Product Generations 4
4. Definitions 5
5. Time Based Maintenance (TBM) Programs 5
Maintenance Practices 6
5.1 Extending Time-Based Maintenance 7
6. Condition Based Maintenance (CBM) Programs 8
7. Time Based versus Condition Based Maintenance 8
8. Maximum Allowable Verification Intervals 9
Maintenance Tests 9
8.1 Table of Maximum Allowable Verification Intervals 9
Level 1 Monitoring (Unmonitored) Table 1a 10
Level 2 Monitoring (Partially Monitored) Table 1b 10
Level 3 Monitoring (Fully Monitored) Table 1c 11
8.2 Retention of Records 12
8.3 Basis for Table 1 Intervals 12
8.4 Basis for Extended Maintenance Intervals for Microprocessor Relays 13
9. Performance-Based Maintenance Process 14
9.1 Minimum Sample Size 15
10. Overlapping the Verification of Sections of the Protection System 17
11. Monitoring by Analysis of Fault Records 18
12. Importance of Relay Settings in Maintenance Programs 18
13. Self-Monitoring Capabilities and Limitations 19
14. Notification of Protection System Failures 20
15. Maintenance Activities 20
15.1 Protective Relays 20
15.2 Voltage & Current Sensing Devices 20
15.3 DC Control Circuitry 21
15.4 Batteries and DC Supplies 21
15.5 Tele-protection equipment 22
16. References 24
Figures 25
Figure 1: Typical Transmission System 25
Figure 2: Typical Generation System 26
Figure 3: Requirements Flowchart 28
Appendix A 28
PRC-005-2 Protection Systems Maintenance & Testing Standard Drafting Team 32

This supplementary reference to PRC-005-2 borrows heavily from the technical reference by the System Protection and Control Task Force (SPCTF) Protection System Maintenance Technical Reference paper approved by the Planning Committee in September 2007). Additionally the Protection System Maintenance and Testing Standard Drafting Team (PSMT SDT) for PRC-005-2 (Project 2007-17) utilized data available from IEEE, EPRI and maintenance programs from various generation and transmission utilities across the NERC boundaries.

1. Introduction and Summary

NERC currently has four reliability standards that are mandatory and enforceable in the United States and address various aspects of maintenance and testing of protection and control systems. These standards are:

PRC-005-1 — *Transmission and Generation Protection System Maintenance and Testing*

PRC-008-0 — *Underfrequency Load Shedding Equipment Maintenance Programs*

PRC-011-0 — *UVLS System Maintenance and Testing*

PRC-017-0 — *Special Protection System Maintenance and Testing*

While these standards require that applicable entities have a maintenance program for Protection Systems, and that these entities must be able to demonstrate they are carrying out such a program, there are no specifics regarding the technical requirements for Protection System maintenance programs. Furthermore, FERC Order 693 directed additional modifications respective to Protection System maintenance programs.

2. Need for Verifying Protection System Performance

Protective relays have been described as silent sentinels, and do not generally demonstrate their performance until a fault or other power system problem requires that they operate to protect power system elements, or even the entire Bulk Electric System (BES). Lacking faults or system problems, the protection systems may not operate for extended periods. A misoperation - a false operation of a protection system or a failure of the protection system to operate, as designed, when needed - can result in equipment damage, personnel hazards, and wide area disturbances or unnecessary customer outages. A maintenance or testing program is used to determine the performance and availability of protection systems.

Typically, utilities have tested protection systems at fixed time intervals, unless they had some incidental evidence that a particular protection system was not behaving as expected. Testing practices vary widely across the industry. Testing has included system functionality, calibration of measuring relays, and correctness of settings. Typically, a protection system must be visited at its installation site and removed from service for this testing.

2.1 Existing NERC Standards for Protection System Maintenance and Testing

For critical BES protection functions, NERC standards have required that each utility or asset owner define a testing program. The starting point is the existing Standard PRC-005, briefly restated as follows:

Purpose: To ensure all transmission and generation Protection Systems affecting the reliability of the Bulk Electric System (BES) are maintained and tested.

PRC-005 is not specific on where the boundaries of the Protection Systems lie. However, the definition of Protection System in the NERC Glossary of Terms Used in Reliability Standards indicates what must be included as a minimum.

Definition of *Protection System* (excerpted from the NERC Standards Glossary of Terms):

Protective relays, associated communication systems, voltage and current sensing devices, station batteries and dc control circuitry.

Applicability: Owners of generation, transmission, and transmission Protection Systems.

Requirements: The owner shall have a documented maintenance program with test intervals. The owner must keep records showing that the maintenance was performed at the specified intervals.

2.2 Proposed Modification to NERC Glossary Definition

The Protection Systems Maintenance and Testing Standard Drafting Team (PSM SDT), proposes changes to the NERC glossary definition of *Protection Systems* as follows:

Protection System (modification) - Protective relays, associated communication systems necessary for correct operation of protective devices, voltage and current sensing devices inputs to protective relays, station DC supply, and DC control circuitry from the station DC supply through the trip coil(s) of the circuit breakers or other interrupting devices.

2.3 Applicability of New Protection System Maintenance Standards

The BES purpose is to transfer bulk power. The applicability language has been changed from the original PRC-005:
"*...affecting the reliability of the Bulk Electric System (BES)…*"

To the present language:
"*… and that are applied on, or are designed to provide protection for the BES."*

The drafting team intends that this Standard will not apply to "merely possible" parallel paths, (sub-transmission and distribution circuits), but rather the standard applies to any Protection System that is designed to detect a fault on the BES and take action in response to that fault. The Standard Drafting Team does not feel that Protection Systems designed to protect distribution substation equipment are included in the scope of this standard; however, this will be impacted by the Regional definitions of the BES.

2.4 Applicable Relays

The NERC Glossary definition has a Protection System including relays, dc supply, current and voltage sensing devices, dc control circuitry and associated communications circuits. The relays to which this standard applies are those relays that that use measurements of voltage, current, frequency and/or phase angle and provide a trip output to trip coils, dc control circuitry or associated communications equipment. This definition extends to IEEE device # 86 (lockout relay) and IEEE device # 94 (tripping or trip-free relay) as these devices are tripping relays that respond to the trip signal of the protective relay that processed the signals from the current and voltage sensing devices.

Relays that respond to non-electrical inputs or impulses (such as, but not limited to, vibration, pressure, seismic, thermal or gas accumulation) are not included.

3. Relay Product Generations

The likelihood of failure and the ability to observe the operational state of a critical protection system, both depends on the technological generation of the relays as well as how long they have been in service. Unlike many other transmission asset groups, protection and control systems have seen dramatic technological changes spanning several generations. During the past 20 years, major functional advances are primarily due to the introduction of microprocessor technology for power system devices such as primary measuring relays, monitoring devices, control systems, and telecommunications equipment.

Modern microprocessor based relays have six significant traits that impact a maintenance strategy:

- Self monitoring capability - the processors can check themselves, peripheral circuits, and some connected substation inputs and outputs such as trip coil continuity. Most relay users are aware that these relays have self monitoring, but are not focusing on exactly what internal functions are actually being monitored. As explained further below, every element critical to the protection system must be monitored, or else verified periodically.
- Ability to capture fault records showing how the protection system responded to a fault in its zone of protection, or to a nearby fault for which it is required not to operate.
- Ability to meter currents and voltages, as well as status of connected circuit breakers, continuously during non-fault times. The relays can compute values such as MW and MVAR line flows that are sometimes used for operational purposes such as SCADA.
- Data communications via ports that provide remote access to all of the results of protection system monitoring, recording, and measurement.
- Ability to trip or close circuit breakers and switches through the protection system outputs, on command from remote data communications messages or from relay front panel button requests.
- Construction from electronic components some of which have shorter technical life or service life than electromechanical components of prior protection system generations.

4. Definitions

Protection System Maintenance Program (PSMP) – An ongoing program by which Protection System components are kept in working order and proper operation of malfunctioning components is restored. A maintenance program can include:

- **Verification** — A means of determining that the component is functioning correctly.
- **Monitoring** — Observation of the routine in-service operation of the component.
- **Testing** — Application of signals to a component to observe functional performance or output behavior, or to diagnose problems.
- **Physical Inspection** — To detect visible signs of component failure, reduced performance and degradation.
- **Calibration** — Adjustment of the operating threshold or measurement accuracy of a measuring element to meet the intended performance requirement.
- **Upkeep** — Routine activities necessary to assure that the component remains in good working order and implementation of any manufacturer's hardware and software service advisories which are relevant to the application of the device.
- **Restoration** — The actions to restore proper operation of malfunctioning components.

5. Time Based Maintenance (TBM) Programs

Time based maintenance is the process in which protection systems are maintained or verified according to a time schedule. The scheduled program often calls for technicians to travel to the physical site and perform a functional test on protection system components. However, some components of a TBM program may be conducted from a remote location - for example, tripping a circuit breaker by communicating a trip command to a microprocessor relay to determine if the entire protection system tripping chain is able to operate the breaker.

Maintenance Practices

Maintenance and testing programs often incorporate the following types of maintenance practices:

- TBM — time based maintenance — externally prescribed maximum maintenance or testing intervals are applied for components or groups of components. The intervals may have been developed from prior experience or manufacturers' recommendations. The TBM verification interval is based on a variety of factors, including experience of the particular asset owner, collective experiences of several asset owners who are members of a country or regional council, etc. The maintenance intervals are fixed, and may range in number of months or in years.

  TBM can include review of recent power system events near the particular terminal. Operating records may prove that some portion of the protection system has operated correctly since the last test occurred. If specific protection scheme components have demonstrated correct performance within specifications, the maintenance test time clock is reset for those components.

- PBM — performance based maintenance — maintenance intervals are established based on analytical or historical results of TBM failure rates on a statistically significant population of similar components. Some level of TBM is generally followed. Statistical analyses accompanied by adjustments to maintenance intervals are used to justify continued use of PBM-developed extended intervals when test failures or in-service failures occur infrequently.

- CBM — condition based maintenance — continuously or frequently reported results from non-disruptive self monitoring of components demonstrate operational status as those components remain in service. Whatever is verified by CBM does not require manual testing, but taking advantage of this requires precise technical focus on exactly what parts are included as part of the self diagnostics.

  Microprocessor based protective relays that perform continuous self-monitoring verify correct operation of most components within the device. Self-monitoring capabilities may include the ac signal inputs, analog measuring circuits, processors and memory for measurement, protection, and data communications, trip circuit monitoring, and protection or data communications signals. For those conditions, failure of a self-monitoring routine generates an alarm and may inhibit operation to avoid false trips. When internal components, such as critical output relay contacts, are not equipped with self-monitoring, they can be manually tested. The method of testing may be local or remote, or through inherent performance of the scheme during a system event.

The TBM is the overarching maintenance process of which the other types are subsets. Unlike TBM, PBM intervals are adjusted based on good or bad experiences. The CBM verification intervals can be hours or even milliseconds between non-disruptive self monitoring checks within or around components as they remain in service.

TBM, PBM, and CBM can be combined for individual components, or within a complete Protection System. The following diagram illustrates the relationship between various types of maintenance practices described in this section. In the Venn diagram the overlapping regions show the relationship of TBM with PBM historical information and the inherent continuous monitoring offered through CBM. This figure shows:

- Region 1: The TBM intervals that are increased based on known reported operational condition of individual components that are monitoring themselves.

- Region 2: The TBM intervals that are adjusted up or down based on results of analysis of maintenance history of statistically significant population of similar products that have been subject to TBM.
- Region 3: Optimal TBM intervals based on regions 1 and 2.

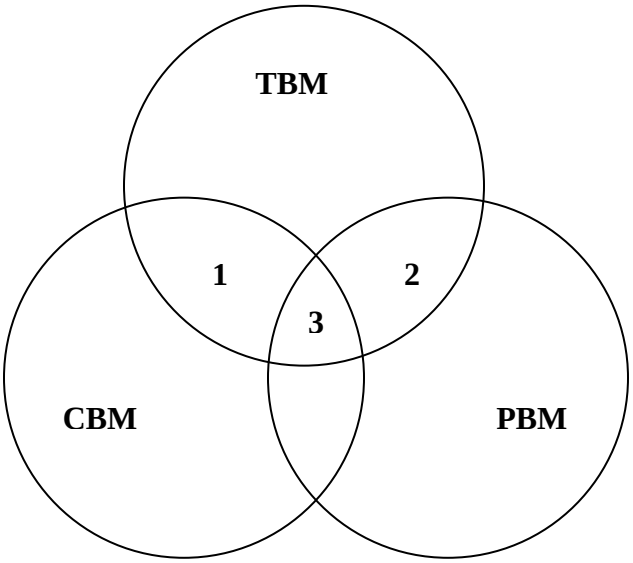

Relationship of time based maintenance types

5.1 Extending Time-Based Maintenance

All maintenance is fundamentally time-based. Default time-based intervals are commonly established to assure proper functioning of each component of the protection system, when data on the reliability of the components is not available other than observations from time-based maintenance. The following factors may influence the established default intervals:

- If continuous indication of the functional condition of a component is available (from relay self monitoring, for example), the intervals may be extended or manual testing may be eliminated. This is referred to as condition-based maintenance or CBM. CBM is valid only for precisely the components subject to monitoring. In the case of microprocessor-based relays, self-monitoring may not include automated diagnostics of every component within a microprocessor.
- Previous maintenance history for a group of components of a common type may indicate that the maintenance intervals can be extended while still achieving the desired level of performance. This is referred to as performance-based maintenance or PBM. It is also sometimes also referred to as reliability-centered maintenance or RCM, but PBM is used in this document.
- Observed proper operation of a component may be regarded as a maintenance verification of the respective component or element in a microprocessor-based device. For such an observation, the maintenance interval may be reset only to the degree that can be verified by data available on the operation. For example, the trip of an electromechanical relay for a fault verifies the trip contact and trip path, but only through the relays in series that actually operated; one operation of this relay cannot prove correct calibration.

Excessive maintenance can actually decrease the reliability of the component or system. It is not unusual to cause failure of a component by removing it from service and restoring it. The improper application of test signals may cause failure of a component. For example, in electromechanical overcurrent relays, test currents have been known to destroy convolution springs.

In addition, maintenance usually takes the component out of service, during which time it is not able to perform its function. Cutout switch failures, or failure to restore switch position, commonly lead to protection failures.

6. Condition Based Maintenance (CBM) Programs

Condition based maintenance is the process of gathering and monitoring the information available from modern microprocessor-based relays and other intelligent electronic devices (IEDs) that monitor protection system elements. These relays and IEDs generate monitoring information during normal operation, and the information can be assessed at a convenient location remote from the substation. The information from these relays and IEDs is divided into two basic types:

> Information can come from background self-monitoring processes, programmed by the manufacturer, or by the user in relay logic settings. The results are presented by alarm contacts or points, front panel indications, and by data communications messages.
>
> Information can come from event logs, captured files, and/or oscillograph records for faults and disturbances, metered values, and binary input status reports. Some of these are available on the relay front panel display, but may be available via data communications ports. Large files of fault information can only be retrieved via data communications. These results comprise a mass of data that must be further analyzed for evidence of the operational condition of the protection system.

Using these two types of information, the user can develop an effective maintenance program carried out mostly from a central location remote from the substation. This approach offers the following advantages:

> Non-invasive Maintenance: The system is kept in its normal operating state, without human intervention for checking. This reduces risk of damage, or risk of leaving the system in an inoperable state after a manual test. Experience has shown that keeping human hands away from equipment known to be working correctly enhances reliability.
>
> Virtually Continuous Monitoring: CBM will report many hardware failure problems for repair within seconds or minutes of when they happen. This reduces the percentage of problems that are discovered through incorrect relaying performance. By contrast, a hardware failure discovered by TBM may have been there for much of the time interval between tests, and there is a good chance that some relays will show health problems by incorrect relaying before being caught in the next test round. The frequent or continuous nature of CBM makes the effective verification interval far shorter than any required TBM maximum interval.

7. Time Based versus Condition Based Maintenance

Time based and condition based maintenance programs are both acceptable, if implemented according to technically sound requirements. Practical programs can employ a *combination of time based and condition based maintenance.* The standard requirements introduce the concept of optionally using condition monitoring as a documented element of a maintenance program.

The Federal Energy Regulatory Commission (FERC), in its Order Number 693 Final Rule dated March 16, 2007 (18 CFR Part 40, Docket No. RM06-16-000) on Mandatory Reliability Standards for the Bulk-Power System, directed NERC to submit a modification to PRC-005-1 that includes a requirement that maintenance and testing of a protection system must be carried out within a maximum allowable interval that is appropriate to the type of the protection system and its impact on the reliability of the Bulk Power

System. Accordingly, this Supplementary Reference Paper refers to the specific maximum allowable intervals in PRC-005-2. The defined time limits allow for longer time intervals if the maintained device is monitored.

A key feature of condition-based monitoring is that it effectively reduces the time delay between the moment of a protection failure and time the protection system owner knows about it, for the monitored segments of the protection system. In some cases, the verification is practically continuous - the time interval between verifications is minutes or seconds. Thus, technically sound, condition-based verification (as specified in the header and the "Monitoring Attributes" column of Tables 1a, 1b and 1c of PRC-005-2), meets the verification requirements of the FERC order even more effectively than the strictly time-based tests of the same system elements as contained in Table 1a.

The result is that:

This NERC standards permits utilities to use a technically sound approach and to take advantage of remote monitoring, data analysis, and control capabilities of modern protection systems to reduce the need for periodic site visits and invasive testing of components by on-site technicians. This periodic testing must be conducted within maximum time intervals specified in Tables 1a, 1b and 1c of PRC-005-2.

8. Maximum Allowable Verification Intervals

The Table of Maintenance Activities and Maximum Interval requirements shows how CBM with newer relay types can reduce the need for many of the tests and site visits that older protection systems require. As explained below, there are some sections of the protection system that monitoring or data analysis may not verify. Verifying these sections of the Protection Systems requires some persistent TBM activity in the maintenance program. However, some of this TBM can be carried out remotely - for example, exercising a circuit breaker through the relay tripping circuits using the relay remote control capabilities via data communications, if there has been no fault or routine operation to demonstrate performance of relay tripping circuits.

Maintenance Tests

Periodic maintenance testing is performed to ensure that the protection and control system is operating correctly after a period of time of field installation. These tests may be used to ensure that individual components are still operating within acceptable performance parameters - this type of test is needed for components susceptible to degraded or changing characteristics due to aging and wear. Full system performance tests may be used to confirm that the total protection system functions from measurement of power system values, to properly identifying fault characteristics, to the operation of the interrupting devices.

8.1 Table of Maximum Allowable Verification Intervals

Table 1, in the standard, specifies maximum allowable verification intervals for various generations of protection systems and categories of equipment that comprise protection systems. The right column indicates verification or testing activities required for each category.

The types of components are illustrated in Figures 1 and 2 at the end of this paper. Figure 1 shows an example of telecommunications-assisted line protection system comprising substation equipment at each terminal and a telecommunications channel for relaying between the two substations. Figure 2 shows a typical Generation station layout. The various subsystems of a Protection System that need to be verified are shown. UFLS, UVLS, and SPS are additional categories of Table 1 that are not illustrated in these Figures.

While it is easy to associate protective relays to the three levels of monitoring, it is also true that most of the components that can make up a Protection System can also have technological advancements that place them into higher levels of monitoring.

To use the Maintenance Activities and Intervals Tables (Tables 1a, 1b and 1c collectively *Tables*) from PRC-005-2:

- First check the table header description to verify that your equipment meets the monitoring requirements. If your equipment does not meet the monitoring requirements of Table 1c then check Table 1b. If your equipment does not meet the requirements of Table 1b then use Table 1a.
- If you find a piece of equipment that meets the monitoring requirements of Table 1b or 1c then you can take advantage of the extended time intervals allowed by Table 1b and 1c. Your maintenance plan must document that this category of equipment can be maintained by the requirements of Table 1b or 1c because it has the necessary attributes required within that Table.
- Once you determine which table applies to your equipment's monitoring requirements then check the Maintenance Activity that is required for that particular category of equipment. This Maintenance Activity is the minimum maintenance activity that must be documented.
- After the maintenance activity is known, check the Maximum Maintenance Interval; this time is the maximum time allowed between hands-on maintenance activity cycles of this category of your equipment.
- Any given set of Protection System equipment can be maintained with any combination of Tables 1a, 1b and 1c. An entity does not have to stick to Table 1a just because some of its equipment is un-monitored.
- An entity does not have to utilize the extended time intervals in Tables 1b or 1c. An easy choice to make is to simply utilize Table 1a. While the maintenance activities resulting from choosing to use only Table 1a would require more maintenance man-hours, the maintenance requirements may be simpler to document and the resulting maintenance plans may be easier to create.

For each Protection System component, Table 1 shows maximum allowable testing intervals for unmonitored, partially monitored and fully monitored protection systems:

Table 1 Maintenance Activities and Maximum Intervals

Level 1 Monitoring (Unmonitored) Table 1a

This table applies to electromechanical, analog solid state and other un-monitored Protection Systems components. This table represents the starting point for all required maintenance activities. The object of this group of requirements is to have specific activities accomplished at maximum set time intervals. From this group of activities it follows that CBM or PBM can increase the time intervals between the hands-on maintenance actions.

Level 2 Monitoring (Partially Monitored) Table 1b

This table applies to microprocessor relays and other associated Protection System components whose self-monitoring alarms are transmitted to a location where action can be taken for alarmed failures. The attributes of the monitoring system must meet the requirements specified in the header of the Table 1b. Given these advanced monitoring capabilities, it is known that there are specific and routine testing functions occurring within the device. Because of this ongoing monitoring hands-on action is required less often because routine testing is automated. However, there is now an additional task that must be accomplished during the hands-on process – the monitoring and alarming functions must be shown to work.

Level 3 Monitoring (Fully Monitored) Table 1c

This table applies to microprocessor relays and other associated Protection System components in which every element or function required for correct operation of the Protection System component is monitored continuously and verified, including verification of the means by which failure alarms or indicators are transmitted to a central location for immediate action. This is the highest level of monitoring and if it is available then this gives an entity the ability to have continuous testing of their (Level 3 Monitored) Protection System Component and thus does not have to manually intervene to accomplish routine testing chores. Level 3 Fully Monitored yields continuous monitoring advantages but has substantial technical hurdles that must be overcome; namely that monitoring also verifies the failure of the monitoring and alarming equipment. Without this important ingredient a device that is thought to be continuously monitored could be in an alarm state without the central location being made aware.

Additional Notes for Table 1a, Table 1b, and Table 1c

1. For electro-mechanical relays, adjustment is required to bring measurement accuracy within the tolerance needed by the asset owner. Microprocessor-relays with no remote monitoring of alarm contacts, etc, are un-monitored relays and need to be verified within the Table interval as other un-monitored relays but may be verified as functional by means other than testing by simulated inputs.
2. Microprocessor relays typically are specified by manufacturers as not requiring calibration, but acceptable measurement of power system input values must be verified (verification of the Analog to Digital [A/D] converters) within the Table intervals. The integrity of the digital inputs and outputs must be verified within the Table intervals.
3. Any Phasor Measurement Unit (PMU) function whose output is used in a protection system or SPS (as opposed to a monitoring task) must be verified as a component in a protection system.
4. In addition to verifying the circuitry that supplies dc to the protection system, the owner must maintain the station dc supply. The most widespread station dc supply is the station battery and charger. Unlike most Protection System elements physical inspection of station batteries for signs of component failure, reduced performance, and degradation are required to ensure that the station battery is reliable enough to deliver dc power when required. IEEE Standards 450, 1188, and 1106 for Vented Lead-Acid, Valve-Regulated Lead-Acid, and Nickel-Cadmium batteries, respectively (which are the most commonly used substation batteries on the NERC BES) have been developed as an important reference source of maintenance recommendations. The Protection System owner should attempt to use the applicable IEEE recommended practice which contains information and recommendations concerning the maintenance, testing and replacement of its substation battery. However, the methods prescribed in these IEEE recommendations cannot be specifically required because they do not apply to all battery applications.
5. Aggregated small entities will naturally distribute the testing of the population of UFLS/UVLS systems, and large entities will usually maintain a portion of these systems in any given year. Additionally, if relatively small quantities of such systems do not perform properly, it will not affect the integrity of the overall program.
6. Voltage & Current Sensing Device circuit input connections to the protection system relays can be verified by comparison of known values of other sources on live circuits or by using test currents and voltages on equipment out of service for maintenance. The verification process can be automated or manual. The values should be verified to be as expected, (phase value and phase relationships are both equally important to prove).

7. Verify the protection system tripping function by performing an operational trip test on all components contained in the trip circuit. This includes circuit breaker or circuit switcher trip coils, auxiliary tripping relays (94), lock-out relays (86), and communications-assisted trip scheme elements. Each control circuit path that carries trip signal must be verified, although each path must be checked only once. A maintenance program may include performing an overall test for the entire system at one time, or several split system tests with overlapping trip verification. Trip coil continuity and aux-contact verification may be accomplished by inspection for the proper control panel light indication. Remote alarm monitoring of the trip coil and aux-contact continuity eliminates the need for tri-monthly inspections of trip coil indications. A documented real-time trip of any given trip path is acceptable in lieu of a functional trip test.
8. "End-to-end test" as used in this supplementary reference is any testing procedure that creates a remote input to the local communications-assisted trip scheme. While this can be interpreted as a GPS-type functional test it is not limited to testing via GPS. Any remote scheme manipulation that can cause action at the local trip path can be used to functionally-test the dc Control Circuitry. A documented real-time trip of any given trip path is acceptable in lieu of a functional trip test. It is possible, with sufficient monitoring, to be able to prove each and every parallel trip path that participated in any given dc Control Circuit trip. Or, another possible solution is that a single trip path from a single monitored relay can be proven to be the trip path that successfully tripped during a real-time operation. The variations are only limited by the degree of engineering and monitoring that an entity desires to pursue.
9. A/D verification may use relay front panel value displays, or values gathered via data communications. Groupings of other measurements (such as vector summation of bus feeder currents) can be used for comparison if calibration requirements assure acceptable measurement of power system input values.

8.2 Retention of Records

PRC-005-1 describes a reporting or auditing cycle of one year and retention of records for three years. However, with a three year retention cycle, the records of verification for a protection system will typically be discarded before the next verification, leaving no record of what was done if a misoperation or failure is to be analyzed.

PRC-005-2 corrects this by requiring that the documentation be retained for two maintenance intervals. Additionally, this requirement assures that the interval between maintenance cycles correctly meets the maintenance interval limits.

8.3 Basis for Table 1 Intervals

SPCTF authors collected all available data from Regional Entities (REs) on time intervals recommended for maintenance and test programs. The recommendations vary widely in categorization of relays, defined maintenance actions, and time intervals, precluding development of intervals by averaging. SPCTF also reviewed the 2005 Report [2] of the IEEE Power System Relaying Committee Working Group I-17 (Transmission Relay System Performance Comparison). Review of the I-17 report shows data from a small number of utilities, with no company identification or means of investigating the significance of particular results.

To develop a solid current base of practice, SPCTF surveyed its members regarding their maintenance intervals for electromechanical and microprocessor relays, and asked the members to also provide definitively-known data for other entities. The survey represented 470 GW of peak load, or 64% of the NERC peak load. Maintenance interval averages were compiled by weighting reported intervals according to the size (based on peak load) of the reporting utility. Thus, the averages more accurately represent practices for the large populations of protection systems used across the NERC regions.

The results of this survey with weighted averaging indicate maintenance intervals of 5 years for electromechanical or solid state relays, and 7 years for un-monitored microprocessor relays.

A number of utilities have extended maintenance intervals for microprocessor relays beyond 7 years, based on favorable experience with the particular products they have installed. To provide a technical basis for such extension, SPCTF authors developed a recommendation of 10 years using the Markov modeling approach from [1] as summarized in Section 8.4. The results of this modeling depend on the completeness of self-testing or monitoring. Accordingly, this extended interval is allowed by Table 1 only when such relays are monitored as specified in the header of Table 1b. Monitoring is capable of reporting protection system health issues that are likely to affect performance within the 10 year time interval between verifications.

It is important to note that, according to modeling results, protection system availability barely changes as the maintenance interval is varied below the 10-year mark. Thus, reducing the maintenance interval does not improve protection system availability. With the assumptions of the model regarding how maintenance is carried out, reducing the maintenance interval actually degrades protection system availability.

8.4 Basis for Extended Maintenance Intervals for Microprocessor Relays

Table 1 allows maximum verification intervals that are extended based on monitoring level. The industry has experience with self-monitoring microprocessor relays that leads to the Table 1 value for partial monitoring as explained in Section 8.3. To develop a basis for the maximum interval for monitored relays in their *Protection System Maintenance — A Technical Reference*, the SPCTF used the methodology of Reference [1], which specifically addresses optimum routine maintenance intervals. The Markov modeling approach of [1] is judged to be valid for the design and typical failure modes of microprocessor relays.

The SPCTF authors ran test cases of the Markov model to calculate two key probability measures:

- Relay Unavailability — the probability that the relay is out of service due to failure or maintenance activity while the power system element to be protected is in service.
- Abnormal Unavailability — the probability that the relay is out of service due to failure or maintenance activity when a fault occurs, leading to failure to operate for the fault.

The parameter in the Markov model that defines self-monitoring capability is ST (for self test). ST = 0 if there is no self-monitoring; ST = 1 for full monitoring. Practical STvalues are estimated to range from .75 to .95. The SPCTF simulation runs used constants in the Markov model that were the same as those used in [1] with the following exceptions:

Sn, Normal tripping operations per hour = 21600 (reciprocal of normal fault clearing time of 10 cycles)

Sb, Backup tripping operations per hour = 4320 (reciprocal of backup fault clearing time of 50 cycles)

Rc, Protected component repairs per hour = 0.125 (8 hours to restore the power system)

Rt, Relay routine tests per hour = 0.125 (8 hours to test a protection system)

Rr, Relay repairs per hour = 0.08333 (12 hours to complete a protection system repair after failure)

Experimental runs of the model showed low sensitivity of optimum maintenance interval to these parameter adjustments.

The resulting curves for Relay Unavailability and Abnormal Unavailability versus maintenance interval

showed a broad minimum (optimum maintenance interval) in the vicinity of 10 years – the curve is flat, with no significant change in either unavailability value over the range of 9, 10, or 11 years. This was true even for a relay Mean Time between Failures (MTBF) of 50 years, much lower than MTBF values typically published for these relays. Also, the Markov modeling indicates that both the relay unavailability and abnormal unavailability actually become higher with more frequent testing. This shows that the time spent on these more frequent tests yields no failure discoveries that approach the negative impact of removing the relays from service and running the tests.

PSMT SDT further notes that the SPCTF also allowed 25% extensions to the "maximum time intervals". With a 5 year time interval established between manual maintenance activities and a 25% time extension then this equates to a 6.25 year maximum time interval. It is the belief of the PSMT SDT that the SPCTF understood that 6.25 years was thereby an adequate maximum time interval between manual maintenance activities. The PSMT SDT has followed the FERC directive for a *maximum* time interval and has determined that no extensions will be allowed. Six years has been set for the maximum time interval between manual maintenance activities. This maximum time interval also works well for maintenance cycles that have been in use in generator plants for decades.

For monitored relays, the PSMT SDT notes that the SPCTF called for 10 years as the interval between maintenance activities. A 10 year interval with a 25% allowed extension equates to a maximum allowed interval of 12.5 years between manual maintenance activities. The Standard does not allow extensions on any component of the protection system; thus the maximum allowed interval for these devices has been set to12 years. Twelve years also fits well into the traditional maintenance cycles of both substations and generator plants.

Also of note is the Table's use of the term "Calendar" in the column for "Maximum Maintenance Interval". The PSMT SDT deemed it necessary to include the term "Calendar" to facilitate annual maintenance planning, scheduling and implementation. This need is the result of known occurrences of system requirements that could cause maintenance schedules to be missed by a few days or weeks. The PSMT SDT chose the term "Calendar" to preclude the need to have schedules be met to the day. An electro-mechanical protective relay that is maintained in year #1 need not be revisited until 6 years later (year #7). For example: a relay was maintained December 15, 2008; it would be due for maintenance again no later than December 31, 2014.

Section 9 describes a performance-based maintenance process which can be used to justify maintenance intervals other than those described in Table 1.

Section 10 describes sections of the protection system, and overlapping considerations for full verification of the protection system by segments. Segments refer to pieces of the protection system, which can range from a single device to a panel to an entire substation.

Section 11 describes how relay operating records can serve as a basis for verification, reducing the frequency of manual testing.

Section 13 describes how a cooperative effort of relay manufacturers and protection system users can improve the coverage of self-monitoring functions, leading to full monitoring of the bulk of the protection system, and eventual elimination of manual verification or testing.

9. Performance-Based Maintenance Process

In lieu of using the Table 1 intervals, a performance-based maintenance process may be used to establish maintenance intervals. A performance-based maintenance process may justify longer maintenance intervals, or require shorter intervals relative to Table 1. In order to use a performance-based maintenance process, the documented maintenance program must include records of repairs, adjustments, and corrections to covered protection systems in order to provide historical justification for intervals other

than those established in Table 1. Furthermore, the asset owner must regularly analyze these records of corrective actions to develop a ranking of causes. Recurrent problems are to be highlighted, and remedial action plans are to be documented to mitigate or eliminate recurrent problems.

Utilities with performance-based maintenance track performance of protection systems, demonstrate how they analyze findings of performance failures and aberrations, and implement continuous improvement actions. Since no maintenance program can ever guarantee that no malfunction can possibly occur, documentation of a performance-based maintenance program would serve the utility well in explaining to regulators and the public a misoperation leading to a major system outage event.

A performance-based maintenance program requires auditing processes like those included in widely used industrial quality systems (such as ***ISO 9001-2000, Quality management systems — Requirements;*** or applicable parts of the NIST Baldridge National Quality Program). The audits periodically evaluate:

- The completeness of the documented maintenance process
- Organizational knowledge of and adherence to the process
- Performance metrics and documentation of results
- Remediation of issues
- Demonstration of continuous improvement.

In order to opt into a Performance Based Maintenance (PBM) program the asset owner must first sort the various Protection System components into population segments. Any population segment must be comprised of at least 60 individual units; if any asset owner opts for PBM but does not own 60 units to comprise a population then that asset owner may combine data from other asset owners until the needed 60 units is aggregated. Each population segment must be composed of like devices from the same manufacturer and subjected to similar environmental factors. For example: One segment cannot be comprised of both GE & Westinghouse electro-mechanical lock-out relays; likewise, one segment cannot be comprised of 60 GE lock-out relays, 30 of which are in a dirty environment and the remaining 30 from a clean environment.

9.1 Minimum Sample Size

Large Sample Size

An assumption that needs to be made when choosing a sample size is "the sampling distribution of the sample mean can be approximated by a normal probability distribution." The Central Limit Theorem states: "In selecting simple random samples of size *n* from a population, the sampling distribution of the sample mean *x* can be approximated by a normal probability distribution as the sample size becomes large." (Essentials of Statistics for Business and Economics, Anderson, Sweeney, Williams, 2003)

To use the Central Limit Theorem in statistics, the population size should be large. The references below are supplied to help define what is large.

> "… whenever we are using a large simple random sample (rule of thumb: n>=30), the central limit theorem enables us to conclude that the sampling distribution of the sample mean can be approximated by a normal distribution." (Essentials of Statistics for Business and Economics, Anderson, Sweeney, Williams, 2003)
>
> "If samples of size n, when n>=30, are drawn from any population with a mean *u* and a standard deviation σ, the sampling distribution of sample means approximates a normal distribution. The greater the sample size, the better the approximation." (Elementary Statistics - Picturing the World, Larson, Farber, 2003)
>
> "The sample size is large (generally n>=30)… (Introduction to Statistics and Data Analysis - Second Edition, Peck, Olson, Devore, 2005)

> "… the normal is often used as an approximation to the *t* distribution in a test of a null hypothesis about the mean of a normally distributed population when the population variance is estimated from a relatively large sample. A sample size exceeding 30 is often given as a minimal size in this connection." (Statistical Analysis for Business Decisions, Peters, Summers, 1968)

Error of Distribution Formula

Beyond the large sample size discussion above, a sample size requirement can be estimated using the bound on the Error of Distribution Formula when the expected result is of a "Pass/Fail" format and will be between 0 and 1.0.

The Error of Distribution Formula is:

$$B = z\sqrt{\frac{\pi(1-\pi)}{n}}$$

Where:

B = bound on the error of distribution (allowable error)

z = standard error

π = expected failure rate

n = sample size required

Solving for n provides:

$$n = \pi(1-\pi)\left(\frac{z}{B}\right)^2$$

Minimum Population Size to use Performance Based Program

One entity's population of components should be large enough to represent a sizeable sample of a vendor's overall population of manufactured devices. For this reason the following assumptions are made:

B = 5%

z = 1.96 (This equates to a 95% confidence level)

π = 4%

Using the equation above, n=59.0.

Minimum Sample Size to evaluate Performance Based Program

The number of components that should be included in a sample size for evaluation of the appropriate testing interval can be smaller because a lower confidence level is acceptable since the sample testing is repeated or updated annually. For this reason, the following assumptions are made:

B = 5%

z = 1.44 (85% confidence level)

π = 4%

Using the equation above, n=31.8.

Recommendation
Based on the above discussion, a sample size should be at least 30 to allow use of the equation mentioned. Using this and the results of the equation, the following numbers are recommended:

Minimum Population Size to use Performance Based Maintenance Program = 60

Minimum Sample Size to evaluate Performance Based Program = 30.

Once the population segment is defined then maintenance must begin within the intervals as outlined for Level 1 monitoring, (Table 1a). Time intervals can be lengthened provided the last year's worth of devices tested (or 30 units, whichever is more) had fewer than 4% countable events. It is notable that 4% is specifically chosen because an entity with a small population (60 units) would have to adjust its time intervals between maintenance if more than 1 countable event was found to have occurred during the last analysis period. A smaller percentage would require that entity to adjust the time interval between maintenance activities if even one unit is found out of tolerance or causes a mis-operation.

The minimum number of units that can be tested in any given year is 5% of the population. Note that this 5% threshold sets a practical limitation on total length of time between intervals at 20 years.

If at any time the number of countable events equals or exceeds 4% of the last year's tested-devices (or 30 units whichever is more) then the time period between manual maintenance activities must be decreased. There is a time limit on reaching the decreased time at which the countable events is less than 4%; this must be attained within three years.

This additional time period of three years to restore segment performance to <4% countable events is mandated to keep entities from "gaming the PBM system". It is believed that this requirement provides the economic disincentives to discourage asset owners from arbitrarily pushing the PBM time intervals out to 20 years as subsequent analysis might show that an excessive number of countable events could then require that the entire population segment be re-tested and re-evaluated within 3 years.

10. Overlapping the Verification of Sections of the Protection System

Table 1 requires that every protection system element be periodically verified. One approach is to test the entire protection scheme as a unit, from voltage and current sources to breaker tripping. For practical ongoing verification, sections of the protection system may be tested or monitored individually. The boundaries of the verified sections must overlap to ensure that there are no gaps in the verification.

All of the methodologies expressed within this report may be combined by an entity, as appropriate, to establish and operate a maintenance program. For example, a protection system may be divided into multiple overlapping sections with a different maintenance methodology for each section:

- Time based maintenance with appropriate maximum verification intervals for categories of equipment as given in the Unmonitored, Partially Monitored, or Fully Monitored Tables;
- Full monitoring as described in header of Table 1c;
- A performance-based maintenance program as described in Section 9;
- Opportunistic verification using analysis of fault records as described in Section 11

11. Monitoring by Analysis of Fault Records

Many users of microprocessor relays retrieve fault event records and oscillographic records by data communications after a fault. They analyze the data closely if there has been an apparent misoperation, as NERC standards require. Some advanced users have commissioned automatic fault record processing systems that gather and archive the data. They search for evidence of component failures or setting problems hidden behind an operation whose overall outcome seems to be correct. The relay data may be augmented with independently captured digital fault recorder (DFR) data retrieved for the same event.

Fault data analysis comprises a legitimate CBM program that is capable of reducing the need for a manual time-interval based check on protection systems whose operations are analyzed. Even electromechanical protection systems instrumented with DFR channels may achieve some CBM benefit. The completeness of the verification then depends on the number and variety of faults in the vicinity of the relay that produce relay response records, and the specific data captured.

A typical fault record will verify particular parts of certain protection systems in the vicinity of the fault. For a given protection system installation, it may or may not be possible to gather within a reasonable amount of time an ensemble of internal and external fault records that completely verify the protection system.

For example, fault records may verify that the particular relays that tripped are able to trip via the control circuit path that was specifically used to clear that fault. A relay or DFR record may indicate correct operation of the protection communications channel. Furthermore, other nearby protection systems may verify that they restrain from tripping for a fault just outside their respective zones of protection. The ensemble of internal fault and nearby external fault event data can verify major portions of the protection system, and reset the time clock for the Table 1 testing intervals for the verified components only.

What can be shown from the records of one operation is very specific and limited. In a panel with multiple relays, only the specific relay(s) whose operation can be observed without ambiguity in the record and the associated wiring paths are verified. Be careful about using fault response data to verify that settings or calibration are correct. Unless records have been captured for multiple faults close to either side of a setting boundary, setting or calibration could still be incorrect.

If fault record data is used to show that portions or all of a protection system have been verified to meet Table 1 requirements, the owner must retain the fault records used, and the maintenance related conclusions drawn from this data and used to defer Table 1 tests, for at least the retention time interval given in Section 8.2.

12. Importance of Relay Settings in Maintenance Programs

In manual testing programs, many utilities depend on pickup value or zone boundary tests to show that the relays have correct settings and calibration. Microprocessor relays, by contrast, provide the means for continuously monitoring measurement accuracy. Furthermore, the relay digitizes inputs from one set of signals to perform all measurement functions in a single self-monitoring microprocessor system. These relays do not require testing or calibration of each setting.

However, incorrect settings may be a bigger risk with microprocessor relays than with older relays. Some microprocessor relays have hundreds or thousands of settings, many of which are critical to protection system performance.

Monitoring does not check measuring element settings. Analysis of fault records may or may not reveal setting problems. To minimize risk of setting errors after commissioning, the user should enforce strict settings data base management, with reconfirmation (manual or automatic) that the installed settings are correct whenever maintenance activity might have changed them. For background and guidance, see [5].

Table 1 requires that settings must be verified to be as specified. The reason for this requirement is simple. With legacy relays (non-microprocessor protective relays) it is necessary to know the value of the intended setting in order to test, adjust and calibrate the relay. Proving that the relay works per specified setting was the de facto procedure. However, with the advanced microprocessor relays it is possible to change relay settings for the purpose of verifying specific functions and then neglect to return the settings to the specified values. While there is no specific requirement to maintain a settings management process there remains a need to verify that the settings left in the relay are the intended, specified settings. This need may manifest itself after any of the following:

- One or more settings are changed for any reason.
- A relay fails and is repaired or replaced with another unit.
- A relay is upgraded with a new firmware version.

13. Self-Monitoring Capabilities and Limitations

Microprocessor relay proponents have cited the self-monitoring capabilities of these products for nearly 20 years. Theoretically, any element that is monitored does not need a periodic manual test. A problem today is that the community of manufacturers and users has not created clear documentation of exactly what is and is not monitored. Some unmonitored but critical elements are buried in installed systems that are described as self-monitoring.

Until users are able to document how all parts of a system which are required for the protective functions are monitored or verified (with help from manufacturers), they must continue with the unmonitored or partially monitored intervals established in Table 1.

Going forward, manufacturers and users can develop mappings of the monitoring within relays, and monitoring coverage by the relay of user circuits connected to the relay terminals.

To enable the use of full monitoring, the manufacturers of the microprocessor-based self-monitoring components in the protection system should publish for the user a document or map that shows:

- How all internal elements of the product are monitored for any failure that could impact protection system performance.
- Which connected circuits are monitored by checks implemented within the product; how to connect and set the product to assure monitoring of these connected circuits; and what circuits or potential problems are not monitored.

With this information in hand, the user can document full monitoring for some or all sections by:

- Presenting or referencing the product manufacturer’s documents.
- Explaining in a system design document the mapping of how every component and circuit that is critical to protection is monitored by the microprocessor product(s) or by other design features.
- Extending the monitoring to include the alarm transmission facilities through which failures are reported to remote centers for immediate action, so that failures of monitoring or alarming systems also lead to alarms and action.
- Documenting the plans for verification of any unmonitored elements according to the requirements of Table 1.

14. Notification of Protection System Failures

When a failure occurs in a protection system, power system security may be compromised, and notification of the failure must be conducted in accordance with relevant NERC standard(s). Knowledge of the failure may impact the system operator's decisions on acceptable loading conditions.

This formal reporting of the failure and repair status to the system operator by the protection system owner also encourages the system owner to execute repairs as rapidly as possible. In some cases, a microprocessor relay or carrier set can be replaced in hours; wiring termination failures may be repaired in a similar time frame. On the other hand, a component in an electromechanical or early-generation electronic relay may be difficult to find and may hold up repair for weeks. In some situations, the owner may have to resort to a temporary protection panel, or complete panel replacement.

15. Maintenance Activities

Some specific maintenance activities are a requirement to ensure reliability. An example would be that a BES entity could be prudent in its protective relay maintenance but if its battery maintenance program is lacking then reliability could still suffer. The NERC glossary outlines a Protection System as containing specific components. PRC-005-02 requires specific maintenance activities be accomplished within a specific time interval. As noted previously, higher technology equipment can contain integral monitoring capability that actually performs maintenance verification activities routinely and often; therefore *manual intervention* to perform certain activities on these type devices may not be needed.

15.1 Protective Relays

These relays are defined as the devices that receive the input signal from the current and voltage sensing devices and are used to isolate a faulted portion of the BES. Devices that sense thermal, vibration, seismic, pressure, gas or any other non-electrical input are excluded.

Non-microprocessor based equipment is treated differently than microprocessor based equipment in the following ways, but the relays must meet the calibration requirements of the asset owner.

- Non-microprocessor devices must be tested with voltage and/or current applied to the device.
- Microprocessor devices may be tested through the integral testing of the device.
    - There is no specific protective relay commissioning test or relay routine test mandated.
    - There is no specific documentation mandated.

15.2 Voltage & Current Sensing Devices

These are the current and voltage sensing devices, usually known as instrument transformers. There is presently a technology available (fiber-optic Hall-effect) that does not utilize conventional transformer technology; these devices and other technologies that produce quantities that represent the primary values of voltage and current are included in this standard.

The intent of the maintenance activity is to verify the input to the protective relay from the device that produces the current or voltage signal sample.

There is no specific test mandated for these devices. The important thing about these signals is to know that the expected output from these devices actually reaches the protective relay. Therefore, the proof of the proper operation of these devices also demonstrates the integrity of the wiring (or other medium used to convey the signal) from the current and voltage sensing device all the way to the protective relay. The following observations apply.

- There is no specific ratio test, routine test or commissioning test mandated.
- There is no specific documentation mandated.

- It is required that the signal be present at the relay.
- This expectation can be arrived at from any of a number of means; by calculation, by comparison to other circuits, by commissioning tests, by thorough inspection, or by any means needed to prove the circuit to the satisfaction of the asset owner.
- An example of testing might be a saturation test of a CT with the test values applied at the relay panel; this therefore tests the CT as well as the wiring from the relay all the back to the CT.
- Another possible test is to measure the signal from the voltage and/or current sensing devices, during load conditions, at the input to the relay.
- Another example of testing the various voltage and/or current sensing devices is to query the microprocessor relay for the real-time loading; this can then be compared to other devices to verify the quantities applied to this relay. Since the input devices have supplied the proper values to the protective relay then the verification activity has been satisfied. Thus event reports (and oscillographs) can be used to prove that the voltage and current sensing devices are performing satisfactorily.
- Still another method is to measure total watts and vars around the entire bus; this should add up to zero watts and zero vars thus proving the voltage and/or current sensing devices system throughout the bus.
- Another method for proving the voltage and/or current sensing devices is to complete commissioning tests on all of the transformers, cabling, fuses and wiring.
- Other methods that provide documentation that the expected transformer values are applied to the inputs to the protective relays are acceptable.

15.3 DC Control Circuitry

This component of Protection Systems includes the trip coil(s) of the circuit breaker, circuit switcher or any other interrupting device. It includes the wiring from the batteries to the relays. It includes the wiring from every trip output to every trip coil. In short, every trip path must be verified; the method of verification is optional to the asset owner. Each trip coil must be tested to trip the circuit breaker (or other interrupting device) at least once.

The dc control circuitry also includes each auxiliary tripping relay (94) and each lock-out relay (86) in any given trip scheme. These electro-mechanical devices must be trip tested. The PSMT SDT considers these devices to share some similarities in failure modes as electro-mechanical protective relays; as such there is a six year maximum interval between mandated maintenance tasks.

When verifying the operation of the 94 and 86 relays each normally-open contact that closes to pass a trip signal must be verified as operating correctly. Normally-open contacts that are not used to pass a trip signal and normally-closed contacts do not have to be verified. Verification of the tripping paths is the requirement.

New technology is also accommodated here; there are some tripping systems that have replaced the traditional hard-wired trip circuitry with other methods of trip-signal conveyance such as fiber-optics. It is the intent of the PSMT SDT to include this, and any other, technology that is used to convey a trip signal from a protective relay to a circuit breaker (or other interrupting device) within this category of equipment.

15.4 Batteries and DC Supplies

IEEE guidelines were used to mandate maintenance activities for batteries. The following guidelines were used: IEEE 450 (for Vented Lead-Acid batteries), IEEE 1188 (for Valve-Regulated Lead-Acid batteries) and IEEE 1106 (for Nickel-Cadmium batteries).

The present NERC definition of a Protection System is "protective relays, associated communication systems, voltage and current sensing devices, station batteries and dc control circuitry." The station battery is not the only component that provides dc power to a Protection System. In the new definition for Protection System "station batteries" are replaced with "station dc supply" to make the battery charger and dc producing stored energy devices (that are not a battery) part of the Protection System that must be maintained.

To insure that there are no open circuits in a lead acid battery string, IEEE 450-2002 recommends that during the monthly inspection "battery float charging current or pilot cell specific gravity" should be measured and recorded. Similarly IEEE 1188-2005 states that during the monthly general inspection, the "dc float current (per string)" should be checked and recorded "using equipment that is accurate at low (typically less than 1 A) currents." These tests are recommended by the IEEE standards for lead acid batteries to detect an open circuit in a battery set that will make a battery unable to deliver dc power.

The PSMT SDT recognizes that there are several technological advances in equipment and testing procedures that allow the owner to choose how to verify that a battery string is free of open circuits. The term "continuity" was introduced into the standard to allow the owner to choose how to verify continuity of a battery set by various methods, and not to limit the owner to the two methods recommended in the IEEE standards. Continuity as used in Table 1 of the standard refers to verifying that there is a continuous current path from the positive terminal of the station battery set to the negative terminal. Without verifying continuity of a station battery, there is no way to determine that the station battery is available to supply dc power to the station.

Batteries cannot be a unique population segment of a Performance Based Maintenance Program (PBM) because there are too many variables in the electro-chemical process to completely isolate all of the performance-changing criteria necessary for using PBM on battery systems.

15.5 Tele-protection equipment

This is also known as associated telecommunications equipment. The equipment used for tripping in a communications assisted trip scheme is a vital piece of the trip circuit. Remote action causing a local trip can be thought of as another parallel trip path to the trip coil that must be tested.

Besides the trip output and wiring to the trip coil(s) there is also a communications medium that must be maintained.
Newer technologies now exist that achieve communications-assisted tripping without the conventional wiring practices of older technology.

For example: older technologies may have included *Frequency Shift Key* methods. This technology requires that guard and trip levels be maintained.

The actual tripping path(s) to the trip coil(s) may be tested as a parallel trip path within the dc control circuitry tests.

Emerging technologies transfer digital information over a variety of carrier mediums that are then interpreted locally as trip signals.

The requirements apply to the communicated signal needed for the proper operation of the protective relay trip logic or scheme. Therefore this standard is applied to equipment used to convey both trip signals and block signals.

It was the intent of this standard to require that a test be made of any communications-assisted trip scheme regardless of the vintage of the technology. The essential element is that the tripping occurs locally when the remote action has been asserted.

Evidence of operational test or documentation of measurement of signal level, reflected power or data-error rates is needed.

Some newer installations utilize digital signals over fiber-optics from the protective relays in the control house to the circuit interrupting device in the yard. This method of tripping the circuit breaker, even though it might be considered communications, must be maintained per the dc control circuitry maintenance requirements.

16. References

NERC/SPCTF/Relay_Maintenance_Tech_Ref_approved_by_PC.pdf

1. "Predicating The Optimum Routine test Interval For Protection Relays," by J. J. Kumm, M.S. Weber, D. Hou, and E. O. Schweitzer, III, IEEE Transactions on Power Delivery, Vol. 10, No. 2, April 1995.
2. "Transmission Relay System Performance Comparison For 2000, 2001, 2002, 2003, 2004 and 2005," Working Group I17 of Power System Relaying Committee of IEEE Power Engineering Society, May 2006.
3. "A Survey of Relaying Test Practices," Special Report by WG I11 of Power System Relaying Committee of IEEE Power Engineering Society, September 16, 1999.
4. "Transmission Protective Relay System Performance Measuring Methodology," Working Group I3 of Power System Relaying Committee of IEEE Power Engineering Society, January 2002.
5. "Processes, Issues, Trends and Quality Control of Relay Settings," Working Group C3 of Power System Relaying Committee of IEEE Power Engineering Society, December 2006.
6. "Proposed Statistical Performance Measures for Microprocessor-Based Transmission-Line Protective Relays, Part I - Explanation of the Statistics, and Part II - Collection and Uses of Data," Working Group D5 of Power System Relaying Committee of IEEE Power Engineering Society, May 1995; Papers 96WM 016-6 PWRD and 96WM 127-1 PWRD, 1996 IEEE Power Engineering Society Winter Meeting.
7. "Analysis And Guidelines For Testing Numerical Protection Schemes," Final Report of CIGRE WG 34.10, August 2000.
8. "Use of Preventative Maintenance and System Performance Data to Optimize Scheduled Maintenance Intervals," H. Anderson, R. Loughlin, and J. Zipp, Georgia Tech Protective Relay Conference, May 1996.

PSMT SDT References

9. "Essentials of Statistics for Business and Economics" Anderson, Sweeney, Williams, 2003
10. "Introduction to Statistics and Data Analysis" - Second Edition, Peck, Olson, Devore, 2005
11. "Statistical Analysis for Business Decisions" Peters, Summers, 1968

Figures

Figure 1: Typical Transmission System

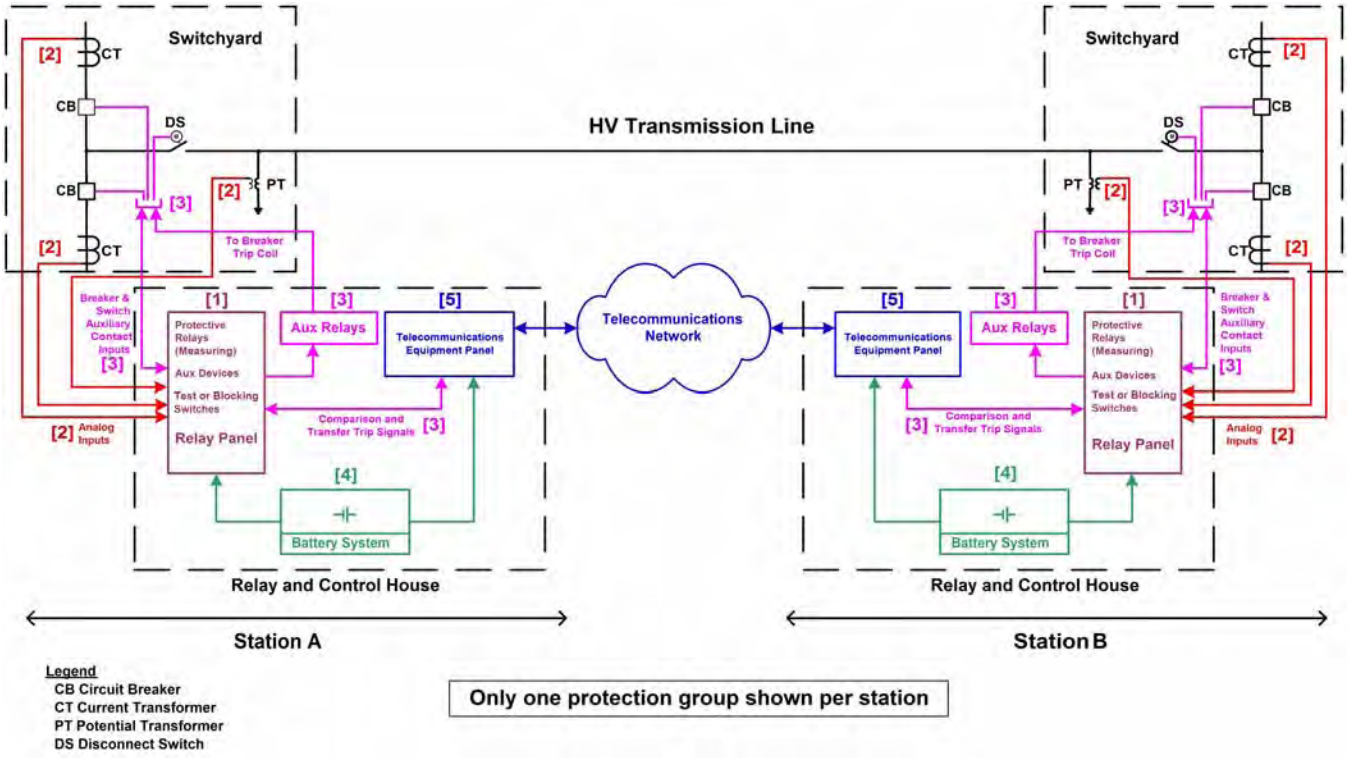

For information on numbered components, see ***Figure 1 & 2 Legend – Components of Protection Systems***

(Return)

Figure 2: Typical Generation System

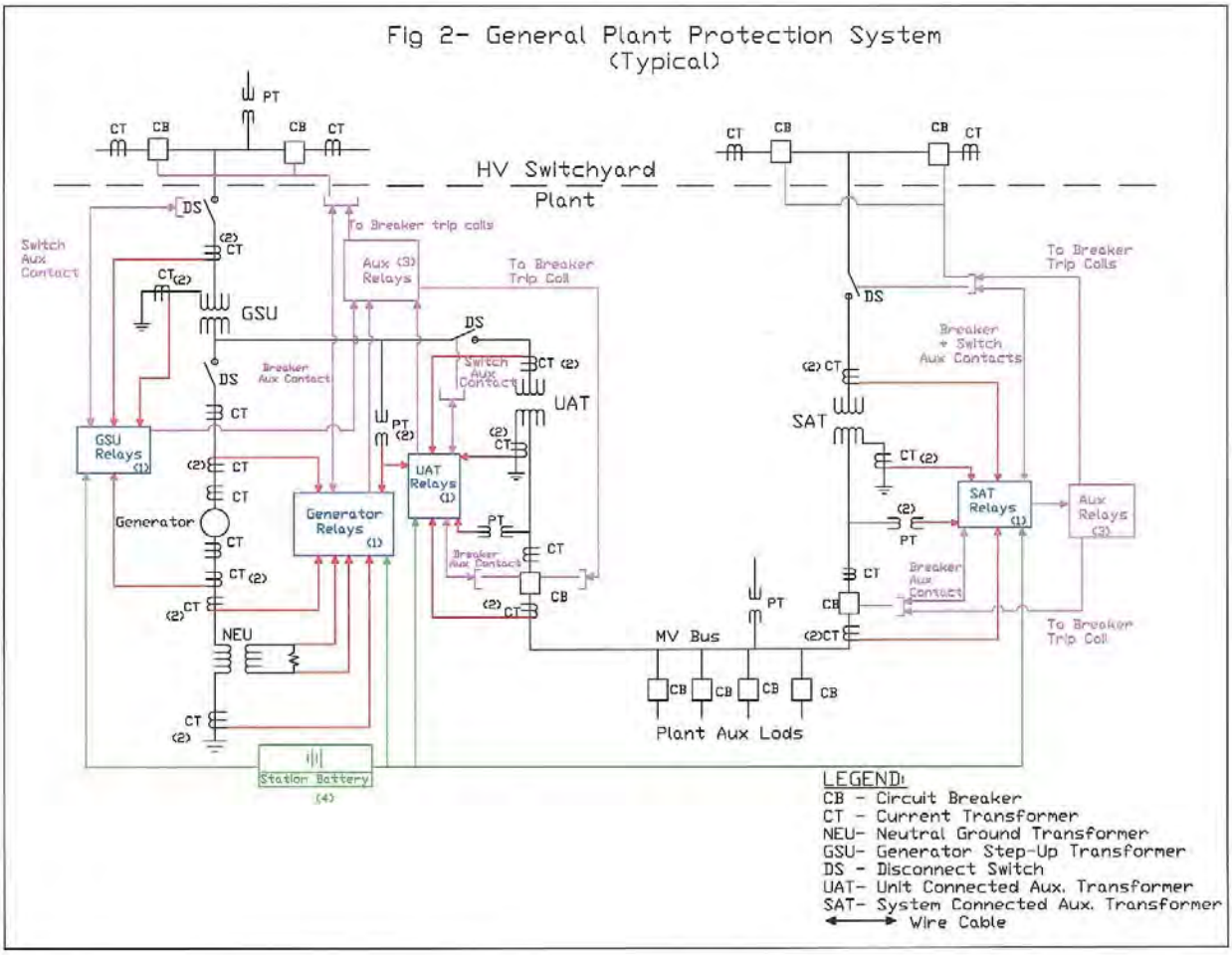

For information on numbered components, see ***Figure 1 & 2 Legend – Components of Protection Systems***

(Return)

Figure 1 and 2 Legend — Components of Protection Systems

Number In Figure	Component of Protection System	Includes	Excludes
1	Protective relays	All protective relays that use current and/or voltage inputs from current & voltage sensors and that trip the 86, 94 or trip coil.	Devices that use non-electrical methods of operation including thermal, pressure, gas accumulation, and vibration. Any ancillary equipment not specified in the definition of Protection systems. Control and/or monitoring equipment that is not a part of the automatic tripping action of the Protection System
2	Current & voltage sensors	Transformers or other current & voltage sensing devices that produce signals for protective relays as well as the wiring (or other medium) used to convey signal output from the sensor to the protective relay input.	Voltage & current sensing devices that are not a part of the Protection System, including sync-check systems, metering systems and data acquisition systems.
3	DC Circuitry	All control wiring (or other medium for conveying trip signals) associated with the tripping action of 86 devices, 94 devices or trip coils (from all parallel trip paths). This would include fiber-optic systems that carry a trip signal as well as hard-wired systems that carry trip current. Also, it includes auxiliary contacts providing breaker position data that is necessary for the proper operation of the Protection System.	Closing circuits, SCADA circuits
4	DC Supply	Batteries and battery chargers and any control power system which has the function of supplying power to the protective relays, associated trip circuits and trip coils.	Any power supplies that are not used to power protective relays or their associated trip circuits and trip coils.
5	Associated communications equipment	Tele-protection equipment used to convey remote tripping action to a local trip coil or blocking signal to the trip logic (if applicable)	Any communications equipment that is not used for remote tripping action to a local trip coil or blocking signal to the trip logic (if applicable)

(Return)

Figure 3: Requirements Flowchart

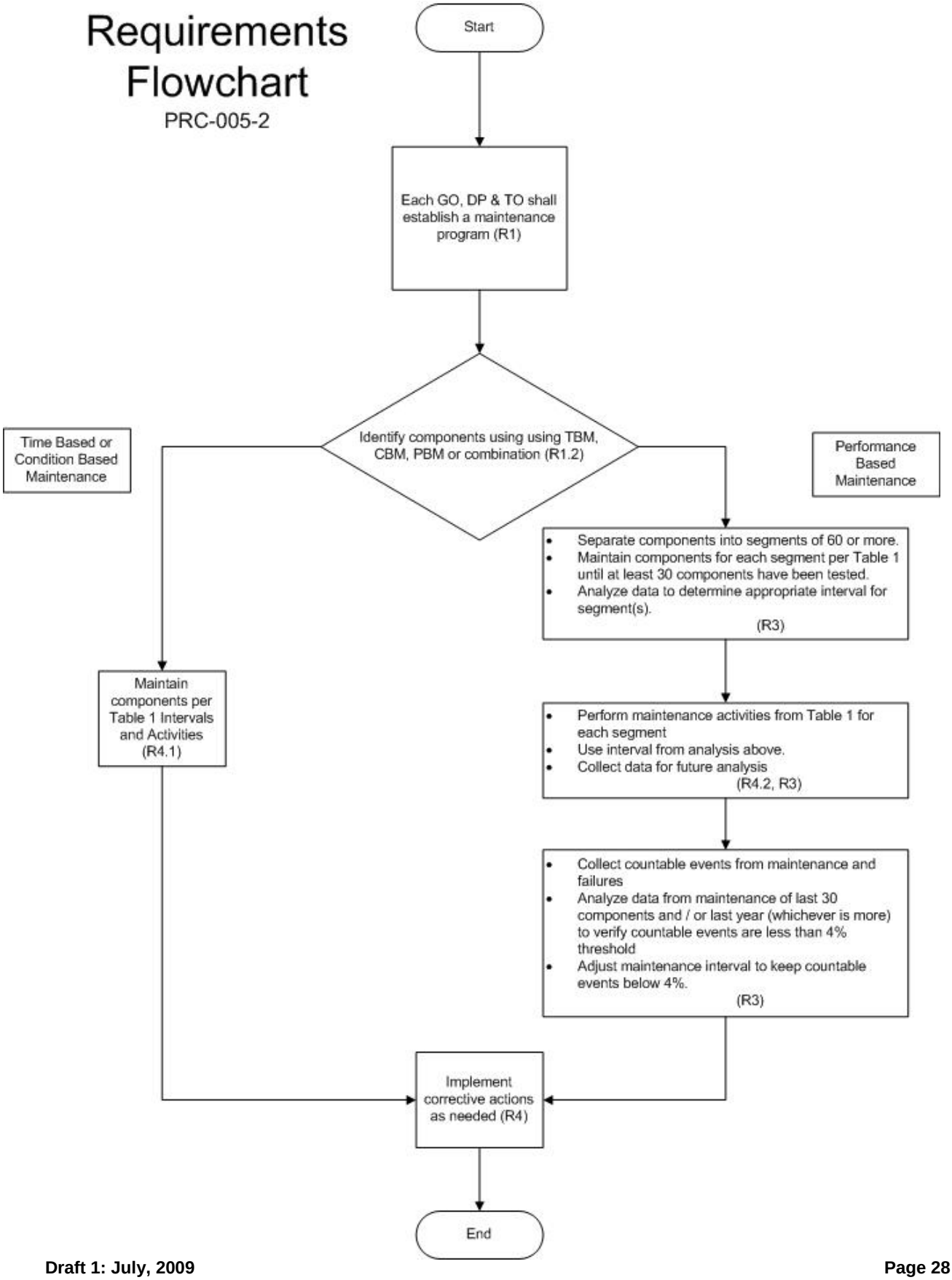

Appendix A

The following illustrates the concept of overlapping verifications and tests as summarized in Section 10 of the paper. As an example, Figure A-1 shows protection for a critical transmission line by carrier blocking directional comparison pilot relaying. The goal is to verify the ability of the entire two-terminal pilot protection scheme to protect for line faults, and to avoid over-tripping for faults external to the transmission line zone of protection bounded by the current transformer locations.

Figure A-1

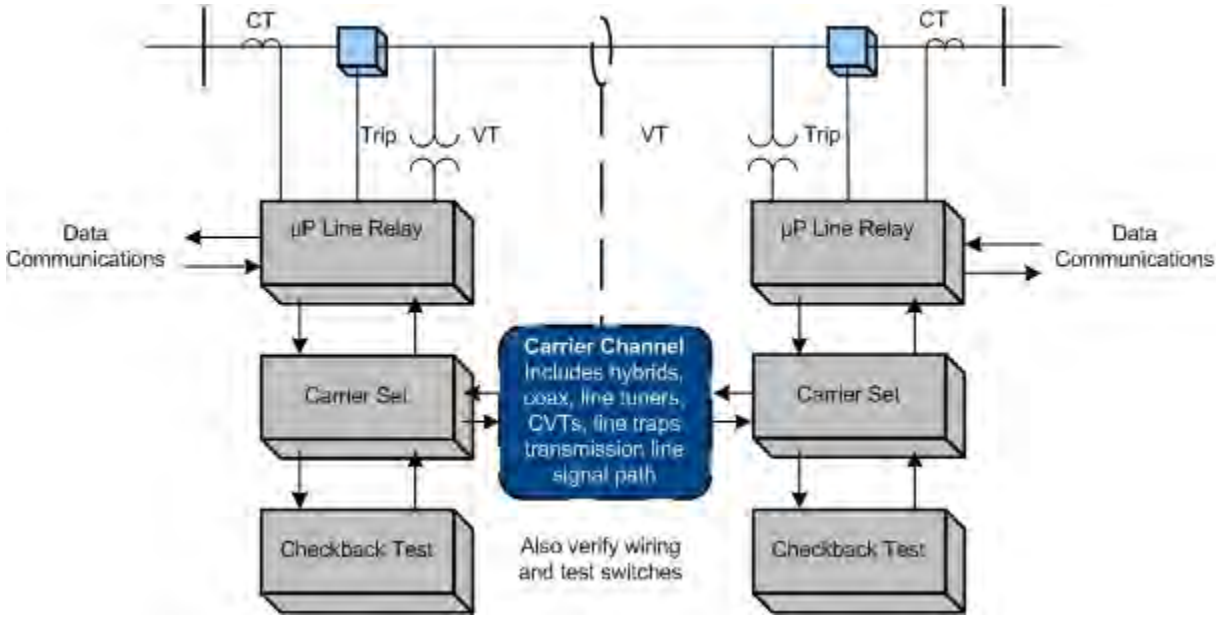

In this example (Figure A1), verification takes advantage of the self-monitoring features of microprocessor multifunction line relays at each end of the line. For each of the line relays themselves, the example assumes that the user has the following arrangements in place:

1. The relay has a data communications port that can be accessed from remote locations.
2. The relay has internal self-monitoring programs and functions that report failures of internal electronics, via communications messages or alarm contacts to SCADA.
3. The relays report loss of dc power, and the relays themselves or external monitors report the state of the dc battery supply.
4. The CT and PT inputs to the relays are used for continuous calculation of metered values of volts, amperes, plus Watts and VARs on the line. These metered values are reported by data communications. For maintenance, the user elects to compare these readings to those of other relays, meters, or DFRs. The other readings may be from redundant relaying or measurement systems or they may be derived from values in other protection zones. Comparison with other such readings to within required relaying accuracy verifies Voltage & Current Sensing Devices, wiring, and analog signal input processing of the relays. One effective way to do

this is to utilize the relay metered values directly in SCADA, where they can be compared with other references or state estimator values.

5. Breaker status indication from auxiliary contacts is verified in the same way as in (2). Status indications must be consistent with the flow or absence of current.
6. Continuity of the breaker trip circuit from dc bus through the trip coil is monitored by the relay and reported via communications.
7. Correct operation of the on-off carrier channel is also critical to security of the protection system, so each carrier set has a connected or integrated automatic checkback test unit. The automatic checkback test runs several times a day. Newer carrier sets with integrated checkback testing check for received signal level and report abnormal channel attenuation or noise, even if the problem is not severe enough to completely disable the channel.

These monitoring activities plus the check-back test comprise automatic verification of all the protection system elements that experience tells us are the most prone to fail. But, does this comprise a complete verification?

Figure A-2

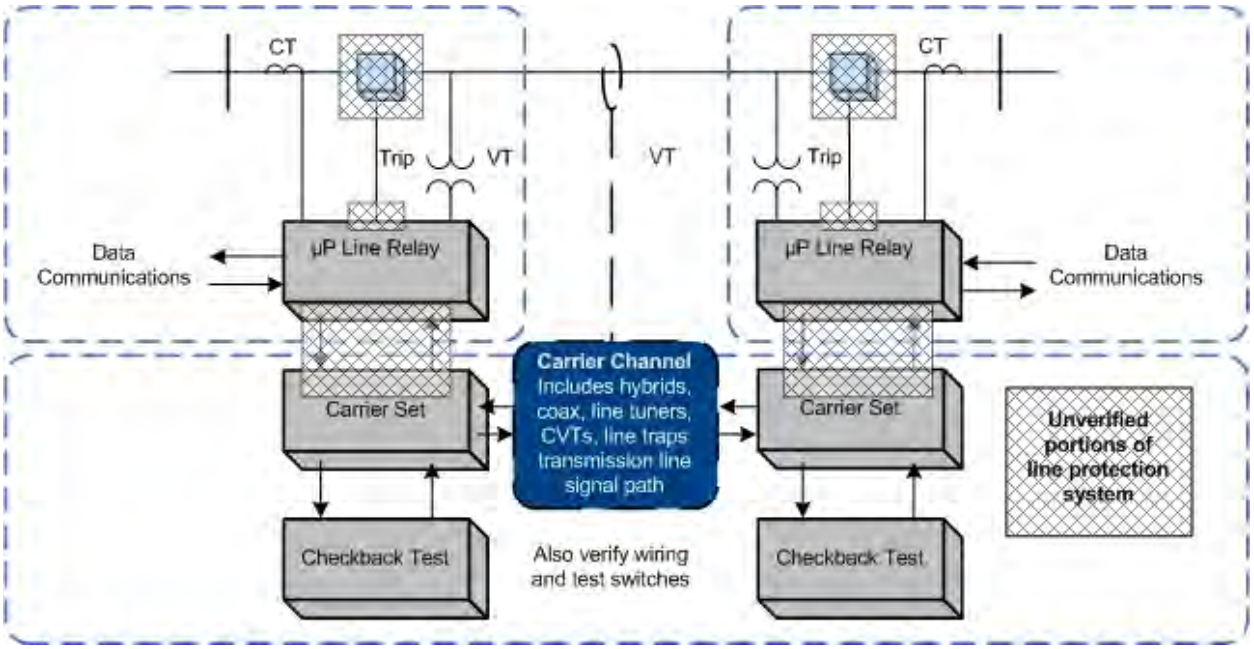

The dotted boxes of Figure A-2 show the sections of verification defined by the monitoring and verification practices just listed. These sections are not completely overlapping, and the shaded regions show elements that are not verified:

1. The continuity of trip coils is verified, but no means is provided for validating the ability of the circuit breaker to trip if the trip coil should be energized.

2. Within each line relay, all the microprocessors that participate in the trip decision have been verified by internal monitoring. However, the trip circuit is actually energized by the contacts of a small telephone-type "ice cube" relay within the line protective relay. The microprocessor energizes the coil of this ice cube relay through its output data port and a transistor driver circuit. There is no monitoring of the output port, driver circuit, ice cube relay, or contacts of that relay. These components are critical for tripping the circuit breaker for a fault.
3. The check-back test of the carrier channel does not verify the connections between the relaying microprocessor internal decision programs and the carrier transmitter keying circuit or the carrier receiver output state. These connections include microprocessor I/O ports, electronic driver circuits, wiring, and sometimes telephone-type auxiliary relays.
4. The correct states of breaker and disconnect switch auxiliary contacts are monitored, but this does not confirm that the state change indication is correct when the breaker or switch opens.

A practical solution for (1) and (2) is to observe actual breaker tripping, with a specified maximum time interval between trip tests. Clearing of naturally-occurring faults are demonstrations of operation that reset the time interval clock for testing of each breaker tripped in this way. If faults do not occur, manual tripping of the breaker through the relay trip output via data communications to the relay microprocessor meets the requirement for periodic testing.

PRC-005 does not address breaker maintenance, and its protection system test requirements can be met by energizing the trip circuit in a test mode (breaker disconnected) through the relay microprocessor. This can be done via a front-panel button command to the relay logic, or application of a simulated fault with a relay test set. However, utilities have found that breakers often show problems during protection system tests. It is recommended that protection system verification include periodic testing of the actual tripping of connected circuit breakers.

Testing of the relay-carrier set interface in (3) requires that each relay key its transmitter, and that the other relay demonstrate reception of that blocking carrier. This can be observed from relay or DFR records during naturally occurring faults, or by a manual test. If the checkback test sequence were incorporated in the relay logic, the carrier sets and carrier channel are then included in the overlapping segments monitored by the two relays, and the monitoring gap is completely eliminated.

PRC-005-2 Protection Systems Maintenance & Testing Standard Drafting Team

Charles W. Rogers – Chair	Consumers Energy
Merle Ashton	Tri-State Generation & Transmission Assn, Inc.
Bob Bentert	Florida Power & Light Co.
John Ciufo	Hydro One, Inc
Richard Ferner	Western Area Power Administration
Sam Francis	Oncor
Carol A Gerou	Midwest Reliability Organization.
Roger D Green	Southern Company Generation
Russell Hardison	Tennessee Valley Authority
David Harper	NRG Texas Maintenance Services
John Kruse	Commonwealth Edison Co.
Mark Peterson	Great River Energy
William D Shultz	Southern Company Generation
Leonard Swanson, Jr.	National Grid USA
Eric A Udren	Quanta Technology
Philip B Winston	Georgia Power Company
John A Zipp	ITC Holdings

NERC
NORTH AMERICAN ELECTRIC RELIABILITY CORPORATION

Status of Addressing Issues (identified by FERC and stakeholders) Associated with PRC-005-1, PRC-008-0, PRC-011-0 and PRC-017-0

PRC-005-1 — Transmission and Generation Protection System Maintenance and Testing		
Source	**Language**	**Drafting Team Resolution**
FERC Order 693	Maintenance and testing of a protection system must be carried out within a maximum allowable time interval that is appropriate for the type of protection system and its impact on the reliability of the bulk power system.	Specific time intervals are included in the draft standard. The justification for the intervals is provided in the supplemental reference document.
FERC Order 693	Consider FirstEnergy's and ISO-NE's suggestions to combine PRC-005, PRC-008, PRC-011, and PRC-017 into a single standard.	This suggestion is being used.
NERC Audit Observation Team	How do you verify compliance for for cts/pts? How do you audit these within a scheduled maintenance program. As part of the procedure, most have accepted visual inspection. Some entities state that testing of the relays verify functionality of the ct/p	Records must be maintained -- records only means of proof if was done. Verification activities in Table 1 establish the activities required for CTs/PTs.
Version 0 Team	Not a standalone standard	Being combined with three other standards all addressing maintenance of protection systems.
Version 0 Team	Include breakers/switches in list	Breakers are specifically NOT included in the Protection System definition, and therefore are NOT addressed in the draft standard.
Version 0 Team	Define evidence	Requirement R4 established that the program must be implemented. Evidence that the program is implemented is a measure; evidence is not discussed in requirements.

PRC-005-1 — Transmission and Generation Protection System Maintenance and Testing		
Source	**Language**	**Drafting Team Resolution**
NERC Audit Observation Team	Determine what on schedule means. Is an entity who maintained/tested 95% of their relays at the same level of non-compliance as an entity who maintained/tested 10% of their relays?	100% compliance is required - violation severity levels to address time. Will consider implementation of this observation when developing compliance elements.
NERC Audit Observation Team	As applicable, each TO, DP and GOP shall have a protection system maintenance and testing program for protection systems that affect the reliability of the BES. Does this include major equipment like circuit breakers and transformers?	Yes – the proposed standard does include protection systems for breakers and transformers. Breakers are specifically NOT included in the Protection System definition, and therefore are NOT addressed as components of Protection Systems.
NERC Audit Observation Team	How do you verify DC control power? All regions require functional testing of the breaker. This should include functional relay & station battery checks, including breaker tripping, not just a visual inspection.	Specific verification activities are established in Table 1 and more details are provided in the supplemental reference.
Phase III/IV Team	All protection systems on the bulk electric system.	The applicability section addresses Protection Systems that are "applied on, or designed to protect the BES", and provides additional specificity regarding applicable generator Protection Systems
Phase III/IV Team	PRC 003 to 005 only address generator (and transmission) protective systems, without defining this term.	The applicability section addresses Protection Systems that are "applied on, or designed to protect the BES", and provides additional specificity regarding applicable generator Protection Systems
Phase III/IV Team	Need to add language to ensure the Regional Requirements focus on the most impactive scenarios	The draft standard established minimum ERO-wide requirements; any Regional requirements would have to exceed the ERO requirements.
Phase III/IV Team	Modify applicability to clarify that the requirements are applicable to the following:	See the applicability section of the standard.

PRC-005-1 — Transmission and Generation Protection System Maintenance and Testing		
Source	**Language**	**Drafting Team Resolution**
Phase III/IV Team	All generation protection systems whose misoperations impact the bulk electric system	Specificity is provided in 4.2.5 addressing generator Protection Systems
Phase III/IV Team	There is no performance requirement or measure of effectiveness of a maintenance program required by the standard	For Time-Based (or Condition-Based) maintenance, minimum activities and maximum intervals are specified; for performance-based maintenance, performance (or effectiveness) goals are established.

PRC-008-0 — Implementation and Documentation of Underfrequency Load Shedding Equipment Maintenance Program		
Source	**Language**	**Drafting Team Resolution**
FERC Order 693	Maintenance and testing of a protection system must be carried out within a maximum allowable time interval that is appropriate for the type of protection system and its impact on the reliability of the bulk power system.	Specific time intervals are included in the draft standard.
Version 0 Team	Definition of evidence required	Requirement R4 established that the program must be implemented. Evidence that the program is implemented is a measure; evidence is not discussed in requirements.
Version 0 Team	Consistent wording from standard to standard required	Combining maintenance standards and being careful to do this.
Fill in the Blank Team	Okay if PRC-006 is fixed	Applicability section of PRC-005-2 (4.2.2) establishes applicability to UFLS established in accordance with ERO requirements.

PRC-011-0 — Undervoltage Load Shedding System Maintenance and Testing		
Source	**Language**	**Drafting Team Resolution**
FERC Order 693	Maintenance and testing of a protection system must be carried out within a maximum allowable time interval that is appropriate for the type of protection system and its impact on the reliability of the bulk power system.	Specific time intervals are included in the draft standard.
Version 0 Team	Exemptions for those with shunt reactors	UV Relays on shunt reactors are not UVLS; these relays would be included as pertinent to relays "applied on or to protect the BES".
Version 0 Team	Define evidence	Requirement R4 established that the program must be implemented. Evidence that the program is implemented is a measure; evidence is not discussed in requirements.

PRC-017-0 — Special Protection System Maintenance and Testing		
Source	**Language**	**Drafting Team Resolution**
FERC Order 693	Require that documentation identified in requirement R2 be routinely provided to NERC or the regional entity.	Language to be addressed in the compliance section of the standard.
FERC Order 693	Maintenance and testing of a protection system must be carried out within a maximum allowable time interval that is appropriate for the type of protection system and its impact on the reliability of the bulk power system.	Table 1 establishes maximum allowable maintenance intervals, with different intervals for different technologies of protective system equipment, and for different components defined within "Protection System"
Version 0 Team	Need to retain two dates	Not sure what this is.
Version 0 Team	Define evidence	Requirement R4 established that the program must be implemented. Evidence that the program is implemented is a measure; evidence is not discussed in requirements.

NERC

NORTH AMERICAN ELECTRIC RELIABILITY CORPORATION

PRC-005-2 — Protection System Maintenance

Frequently Asked Questions

Practical Compliance and Implementation (Draft 1)

Protection System Maintenance and Testing Standard Drafting Team

July, 2009

to ensure the reliability of the bulk power system

116-390 Village Blvd., Princeton, NJ 08540
609.452.8060 | 609.452.9550 fax
www.nerc.com

Table of Contents

Introduction **2**

Executive Summary **2**

Terms Used in PRC-005-2 ..... **2**

Frequently Asked Questions **3**

General FAQs: *3*

Group by Type of Protection System Component: *5*

1. All *5*

2. Protective Relays *5*

3. Voltage and Current Sensing Device Inputs to Protective Relays *6*

4. Protection System Control Circuitry *7*

5. Station dc Supply *8*

6. Protection System Communications Equipment *12*

7. UVLS and UFLS Relays that Comprise a Protection System Distributed Over the Power System *14*

8. SPS or Relay Sensing for Centralized UFLS or UVLS *14*

Group by Type of BES Facility: *15*

1. All BES Facilities *15*

2. Generation *15*

3. Transmission *16*

Group by Type of Maintenance Program: *16*

1. All Protection System Maintenance Programs *16*

2. Time-Based Protection System Maintenance (TBM) Programs *17*

3. Performance-Based Protection System Maintenance (PBM) Programs *18*

Group by Monitoring Level: *20*

1. All Monitoring Levels *20*

2. Level 1 Monitored Protection Systems (Unmonitored Protection Systems) *28*

3. Level 2 Monitored Protection Systems (Partially Monitored Protection Systems) *29*

4. Level 3 Monitored Protection Systems (Fully Monitored Protection Systems) *29*

Appendix A — Protection System Maintenance Standard Drafting Team **30**

Introduction

The following is a draft collection of questions and answers that the PSMT SDT believes could be helpful to those implementing NERC Standard PRC-005-2 Protection System Maintenance. As the draft standard proceeds through development, this FAQ document will be revised, including responses to key or frequent comments from the posting process. The FAQ will be organized at a later time during the development of the draft Standard.

This FAQ document will support both the Standard and the associated Technical Reference document.

Executive Summary

- To be added later if needed.

Terms Used in PRC-005-2

Maintenance Correctable Issue — As indicated in footnote 2 of the draft standard, a maintenance correctable issue is a failure of a device to operate within design parameters that can be restored to functional order by calibration, repair or replacement

Segment — As indicated in *PRC-005 Attachment A Criteria for a Performance-Based Protection System Maintenance Program*, a segment is a "A grouping of Protection Systems or component devices of a particular model or type from a single manufacturer, with other common factors such that consistent performance is expected across the entire population of the segment, and shall only be defined for a population of 60 or more individual components."

Component — This equipment is first mentioned in Requirement 1, Part 1.1 of this standard. A component is any individual discrete piece of equipment included in a Protection System, such as a protective relay or current sensing device. Types of components are listed in Table 1 ("Maximum Allowable Testing Intervals and Maintenance Activities for Unmonitored Protection Systems"). For components such as dc circuits, the designation of what constitutes a dc control circuit element is somewhat arbitrary and is very dependent upon how an entity performs and tracks the testing of the dc circuitry. Some entities test their dc circuits on a breaker basis whereas others test their circuitry on a local zone of protection basis. Thus, entities are allowed the latitude to designate their own definitions of "dc control circuit elements." Another example of where the entity has some discretion on determining what constitutes a single component is the voltage and current sensing devices, where the entity may choose either to designate a full three-phase set of such devices or a single device as a single component.

Countable Event — As indicated in footnote 4 of *PRC-005 Attachment A, Criteria for a Performance-based Protection System Maintenance Program*, countable events include any failure of a component requiring repair or replacement, any condition discovered during the verification activities in Table 1a through Table 1c which requires corrective action, or a Misoperation attributed to hardware failure or calibration failure. Misoperations due to product design errors, software errors, relay settings different from specified settings, Protection System component configuration errors, or Protection System application errors are *not* included in Countable Events.

Frequently Asked Questions

General FAQs:

1. **The standard seems very complicated, and is difficult to understand. Can it be simplified?**

   Because the standard is establishing parameters for condition-based Maintenance (R2) and performance-based Maintenance (R3) in addition to simple time-based Maintenance, it does appear to be complicated. At its simplest, an entity needs to follow R1 and R4 and perform ONLY time-based maintenance according to Table 1a, eliminating R2 and R3 from consideration altogether. If an entity then wishes to take advantage of monitoring on its Protection System components, R2 comes into play, along with Tables 1b and 1c. If an entity wishes to use historical performance of its Protection System components to perform performance-based Maintenance, R3 applies.

   Please see the following diagram, which provides a “flow chart” of the standard.

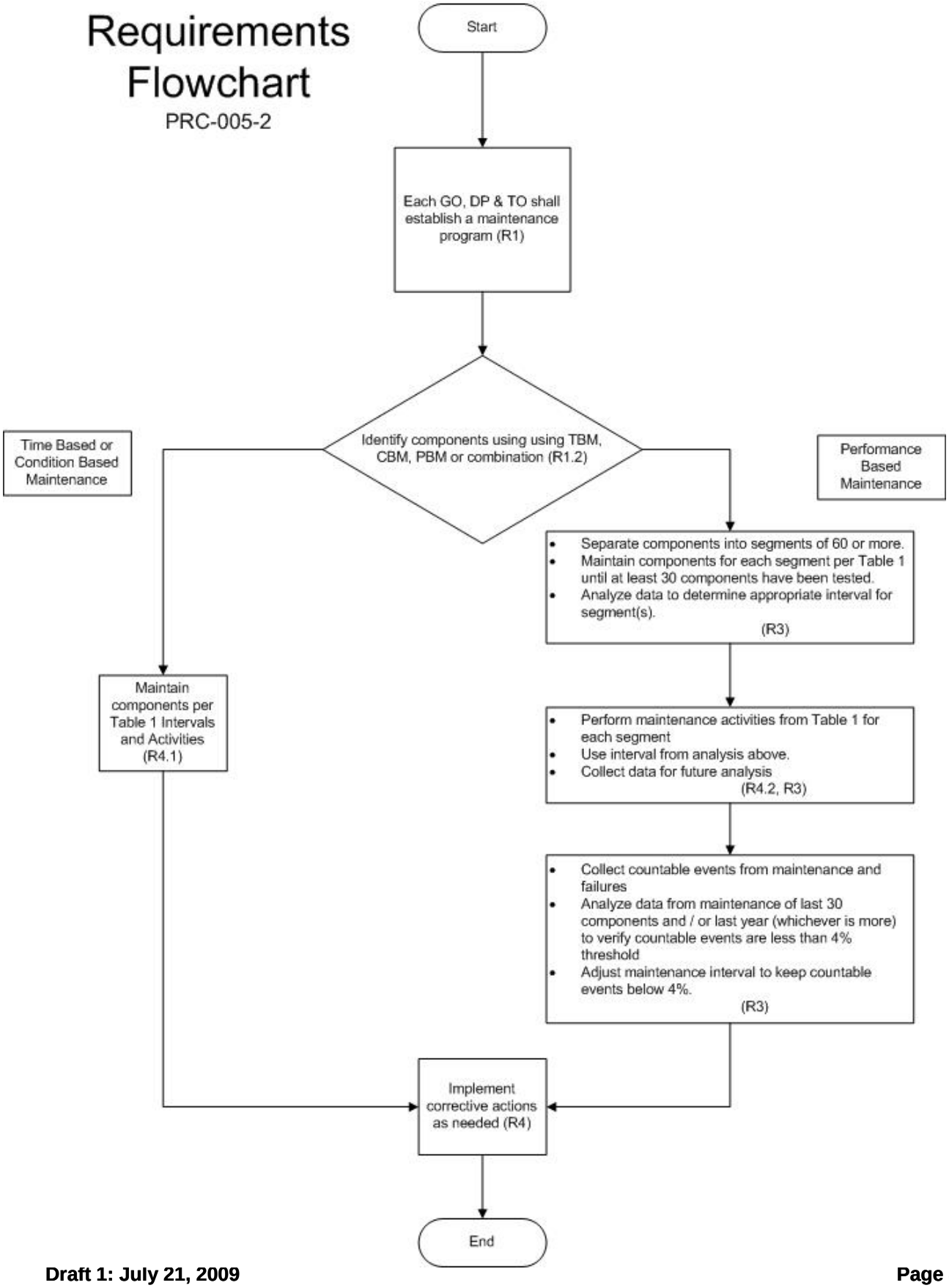
Requirements Flowchart
PRC-005-2
Start
Each GO, DP & TO shall establish a maintenance program (R1)
Identify components using using TBM, CBM, PBM or combination (R1.2)
Time Based or Condition Based Maintenance
Performance Based Maintenance
Separate components into segments of 60 or more.
Maintain components for each segment per Table 1 until at least 30 components have been tested.
Analyze data to determine appropriate interval for segment(s).
(R3)
Maintain components per Table 1 Intervals and Activities (R4.1)
Perform maintenance activities from Table 1 for each segment
Use interval from analysis above.
Collect data for future analysis
(R4.2, R3)
Collect countable events from maintenance and failures
Analyze data from maintenance of last 30 components and / or last year (whichever is more) to verify countable events are less than 4% threshold
Adjust maintenance interval to keep countable events below 4%.
(R3)
Implement corrective actions as needed (R4)
End

Group by Type of Protection System Component:

1. **All**

   A. Are power circuit reclosers, reclosing relays, closing circuits and auto-restoration schemes covered in this standard?

   No. As stated in R1, this standard covers protective relays that use measurements of voltage, current and/or phase angle to determine anomalies and to trip a portion of the BES. Reclosers, reclosing relays, closing circuits and auto-restoration schemes are used to cause devices to close as opposed to electrical-measurement relays and their associated circuits that cause circuit interruption from the BES; such closing devices and schemes are more appropriately covered under other NERC Standards. There is one notable exception: if a Special Protection System incorporates automatic closing of breakers, the related closing devices are part of the SPS and must be tested accordingly.

   B. Why does PRC-005-2 not specifically require maintenance and testing procedures as reflected in the previous standard, PRC-005-1?

   PRC-005-1 does not require detailed maintenance and testing procedures, but instead requires summaries of such procedures, and is not clear on what is actually required. PRC-005-2 requires a documented Maintenance program, and is focused on establishing Requirements rather than prescribing methodology to meet those Requirements. Between the activities identified in Tables 1a, 1b, and 1c, and the various components of the definition established for a "Protection System Maintenance Program", PRC-005-2 establishes the activities and time-basis for a Protection System Maintenance Program to a level of detail not previously required.

2. **Protective Relays**

   A. How do I approach testing when I have to upgrade firmware of a microprocessor relay?

   The component "Upkeep" in the definition of a Protection System Maintenance Program, addresses "Routine activities necessary to assure that the component remains in good working order and implementation of any manufacturer's hardware and software service advisories which are relevant to the application of the device." The Maintenance Activities specified in Table 1a, Table 1b, and Table 1c do not present any requirements related to Upkeep for Protective Relays. However, the entity should assure that the relay continues to function properly after implementation of firmware changes.

   B. I use my protective relays only as sources of metered quantities and breaker status for SCADA and EMS through a substation distributed RTU or data concentrator to the control center. What are the maintenance requirements for the relays?

   This standard addresses only devices "that are applied on, or are designed to provide protection for the BES." Protective relays, providing only the functions mentioned in the question, are not included.

   C. I use my protective relays for fault and disturbance recording, collecting oscillographic records and event records via communications for fault analysis to meet NERC and DME requirements. What are the maintenance requirements for the relays?

For relays used only as disturbance monitoring equipment, the NERC standard PRC-018-1 R3 & R6 states the maintenance requirements, and is being addressed by a Standards activity that is revising PRC-002-1 and PRC-018-1. For protective relays "that are applied on, or are designed to provide protection for the BES," this standard applies, even if they also perform DME functions.

3. Voltage and Current Sensing Device Inputs to Protective Relays

A. What is meant by "…verify the current and voltage circuit inputs from the voltage and current sensing devices to the protective relays …" Do we need to perform ratio, polarity and saturation tests every few years?

No. You must prove that the protective relay is receiving the expected values from the voltage and current sensing devices (typically voltage and current transformers). This can be as difficult as is proposed by the question (with additional testing on the cabling and substation wiring to ensure that the values arrive at the relays); or simplicity can be achieved by other verification methods. Some examples follow:

- ◊ Compare the secondary values, at the relay, to a metering circuit, fed by different current transformers, monitoring the same line as the questioned relay circuit.
- ◊ Compare the values, as determined by the questioned relay, to another protective relay monitoring the same line, with currents supplied by different CTs.
- ◊ Query SCADA for the power flows at the far end of the line protected by the questioned relay, compare those SCADA values to the values as determined by the questioned relay.
- ◊ Totalize the Watts and VARs on the bus and compare the totals to the values as seen by the questioned relay.

The point of the verification procedure is to ensure that all of the individual components are functioning properly; and that, an ongoing proactive procedure is in place to re-check the various components of the protective relay measuring systems.

B. The verification of phase current and voltage measurements by comparison to other quantities seems reasonable. How, though, can I verify residual or neutral currents, or 3V0 voltages, by comparison, when my system is closely balanced?

These values will be zero, or very small, for any reasonably balanced system. To verify these values by comparison, you will need to rely on the normal condition that your system is not perfectly balanced, and there will usually be a small zero-sequence current or voltage, and these values can be measured with instruments having a sufficiently low resolution range. A reading of precisely zero will probably suggest that there is an opening (or some other problem) in the measuring circuit. A finite value of a few percent of the phase quantities, however, may suggest that the measuring circuit is indeed performing properly.

These quantities may be also verified by use of oscillographic records for connected microprocessor relays as recorded during system disturbances. Such records may compare to similar values recorded at other locations by other microprocessor relays for the same event, or compared to expected values (from short circuit studies) for known fault locations.

C. Is wiring insulation or hi-pot testing required by this Maintenance Standard?

No, wiring insulation and equipment hi-pot testing are not required by the Maintenance Standard.

4. Protection System Control Circuitry

A. Is it permissible to verify circuit breaker tripping at a different time (and interval) than when we verify the protective relays and the instrument transformers?

Yes, provided the entire Protective System is tested within the individual components' maximum allowable testing intervals.

B. The Protection System Maintenance Standard describes requirements for verifying the tripping of circuit breakers. What is this telling me about maintenance of circuit breakers?

Requirements in PRC-005-2 are intended to verify the integrity of tripping circuits, including the breaker trip coil, as well as the presence of auxiliary supply (usually a dc battery) for energizing the trip coil if a protection function operates. Beyond this, PRC-005-2 sets no requirements for verifying circuit breaker performance, or for maintenance of the circuit breaker.

C. How do I test each dc Control Circuit path, as established for level 2 (partially monitored protection systems) monitoring of a "Protection System Control Circuitry (Trip coils and auxiliary relays)"?

Table 1b specifies that each breaker trip coil, auxiliary relay, and lockout relay must be operated within the specified time period. The required operations may be via targeted maintenance activities, or by documented operation of these devices for other purposes such as fault clearing.

D. What does this standard require for testing an Auxiliary Tripping Relay?

Table 1 requires that the trip test must verify that the auxiliary tripping relay (94) or lockout relay (86) operates electrically and that their trip output(s) perform as expected.

E. What does a functional trip test include?

An operational trip test must be performed on each portion of a trip circuit. Each control circuit path that produces trip signal must be verified; this includes trip coils, auxiliary tripping relays (94), lockout relays (86) and communications-assisted-trip schemes.

A trip test may be an overall test that verifies the operation of the entire trip scheme at once, or it may be several tests of the various portions that make up the entire trip scheme, provided that testing of the various portions of the trip scheme verifies all of the portions, including parallel paths, and overlaps those portions.

A circuit breaker or other interrupting device needs to be trip tested at least once per trip coil. Breaker auxiliary contacts that are essential for the proper operation of the protective relay trip-circuit (or trip-logic) must be verified as providing the correct breaker open/close status information to the Protection System.

Discrete-component auxiliary relays (94) and lock-out relays (86) must be proven by trip test. The trip test must verify that the auxiliary or lock-out relay operates electrically and that the relay's trip output(s) change(s) state. Software latches or control algorithms, including trip logic processing implemented as programming component such as a microprocessor relay that take the place of (conventional) discrete component auxiliary relays or lock-out relays do not have to be routinely trip tested.

Normally-closed auxiliary contacts from other devices (for example, switchyard-voltage-level disconnect switches, interlock switches, or pressure switches) which are in the breaker trip path do not need to be tested.

F. Is a Sudden Pressure Relay an Auxiliary Tripping Relay?

No. IEEE C37.2-2008 assigns the device number 94 to auxiliary tripping relays. Sudden pressure relays are assigned device number 63, and is excluded from the Standard by footnote 1.

G. The standard specifically mentions Auxiliary and Lock-out relays; what is an Auxiliary Tripping Relay?

An auxiliary relay, IEEE Device Number 94, is described in IEEE Standard C37.2-2008 as "A device that functions to trip a circuit breaker, contactor, or equipment; to permit immediate tripping by other devices; or to prevent immediate reclosing of a circuit interrupter if it should open automatically, even though its closing circuit is maintained closed."

H. What is a Lock-out Relay?

A lock-out relay, IEEE Device Number 86, is described in IEEE Standard C37.2 as "A device that trips and maintains the associated equipment or devices inoperative until it is reset by an operator, either locally or remotely."

I. My mechanical device does not operate electrically and does not have calibration settings; what maintenance activities apply?

You must conduct a test(s) to verify the integrity of the trip circuit. This standard does not cover circuit breaker maintenance or transformer maintenance. The standard also does not cover testing of devices such as sudden pressure relays (63), temperature relays (49), and other relays which respond to mechanical parameters rather than electrical parameters.

5. Station dc Supply

A. What constitutes the station dc supply as mentioned in the definition of Protective System?

The station direct current (dc) supply normally consists of two components: the battery charger and the station battery itself. There are also emerging technologies that provide a source of dc supply that does not include either a battery or charger.

Battery Charger — The battery charger is supplied by an available ac source. At a minimum, the battery charger must be sized to charge the battery (after discharge) and supply the constant dc load. In many cases, it may be sized also to provide sufficient dc current to handle the higher energy requirements of tripping breakers and switches when actuated by the protective relays in the Protection System.

Station Battery — Station batteries provide the dc power required for tripping and for supplying normal dc power to the station in the event of loss of the battery charger. There are several technologies of battery that require unique forms of maintenance as established in Table 1.

Emerging Technologies — Station dc supplies are currently being developed that use other energy storage technologies beside the station battery to prevent loss of the station dc supply when ac power is lost. Maintenance of these station dc supplies will require different kinds of tests and inspections. Table 1 presents maintenance activities and maximum allowable testing

intervals for these new station dc supply technologies. However, because these technologies are relatively new the maintenance activities for these station dc supplies may change over time.

B. In the Maintenance Activities for station dc supply in Table 1, what do you mean by "continuity"?

Because the Standard pertains to maintenance not only of the station battery, but also the whole station dc supply, continuity checks of the station dc supply are required. "Continuity" as used in Table 1 refers to verifying that there is a continuous current path from the positive terminal of the station battery set to the negative terminal, otherwise there is no way of determining that a station battery is available to supply dc current to the station.

The current path through a station battery from its positive to its negative connection to the dc control circuits is composed of two types of elements. These path elements are the electrochemical path through each of its cells and all of the internal and external metallic connections and terminations of the batteries in the battery set. If there is loss of continuity (an open circuit) in any part of the electrochemical or metallic path the battery set will not be available for service.

C. Why is it necessary to verify the continuity of the dc supply?

In the event of the loss of the ac source or battery charger, the battery must be capable of supplying dc current, both for continuous dc loads and for tripping breakers and switches. Without continuity, the battery cannot perform this function.

If the battery charger is not sized to handle the maximum dc current required to operate the protective systems, it is sized only to handle the constant dc load of the station and the charging current required to bring the battery back to full charge following a discharge. At those stations, the battery charger would not be able to trip breakers and switches if the battery experiences loss of continuity.

At generating stations and large transmission stations where battery chargers are capable of handling the maximum current required by the Protection System, there are still problems that could potentially occur when the continuity through the connected battery is interrupted.

- ◊ Many battery chargers produce harmonics which can cause failure of dc power supplies in microprocessor based protective relays and other electronic devices connected to station dc supply. In these cases, the substation battery serves as a filter for these harmonics. With the loss of continuity in the battery, the filter provided by the battery is no longer present.
- ◊ Loss of electrical continuity of the station battery will cause, regardless of the battery charger's output current capability, a delayed response in full output current from the charger. Almost all chargers have an intentional 1 to 2 second delay to switch from a low substation dc load current to the maximum output of the charger. This delay would cause the opening of circuit breakers to be delayed which could violate system performance standards.

D. How do you verify continuity of the dc supply?

Monitoring of the station dc supply voltage will not indicate that there is a problem with the dc current path through the battery unless the battery charger is taken out of service. At that time

a break in the continuity of the station battery current path will be revealed because there will be no voltage on the substation dc circuitry.

Although the Standard prescribes what must be done during the maintenance activity it does not prescribe how the maintenance activity should be accomplished. There are several methods that can be used to verify the electrical continuity of the battery.

- ◊ One method is to measure that there is current flowing through the battery itself by a simple clamp on milliamp-range ammeter. A battery is always either charging or discharging. Even when a battery is charged there is still a measurable float charge current that can be detected to verify that there is continuity in the electrical path through the battery.
- ◊ A simple test for continuity is to remove the battery charger from service and verify that the battery provides voltage and current to the dc system. However, the behavior of the various dc-supplied equipment in the station should be considered before using this approach.
- ◊ Manufacturers of microprocessor based battery chargers have developed methods for their equipment to periodically (or continuously) tested for battery continuity. For example, one manufacturer periodically reduces the float voltage on the battery until current from the battery to the dc load can be measured to confirm continuity.

No matter how the electrical continuity of a battery set is verified it is a necessary maintenance activity that must be performed at the intervals prescribed by Table 1 to insure that the station dc supply will provide the required current to the Protection System at all times.

E. Why is specific gravity testing required?

Specific gravity testing measures the state of the charge for each individual cell, and is performed to determine the condition of the charging system as well as the condition of the individual cell.

Specific gravity measurements can also be used as an indication of loss of continuity over a period of time. Specific gravity measurement is a method of determining the state of charge of a battery. Loss of continuity in the battery circuit will not allow charging current to flow through the battery and the battery cells will eventually self discharge causing the specific gravity to approach the specific gravity value of water which is 1.0.

If the specific gravity measurements taken during an inspection are determined to be low, this indicates that the battery is in a state of discharge. If no recent high discharges of the battery have occurred and the float voltage is normal, then the continuity of the battery circuit can be suspected and other tests such as measuring battery current should be made to determine if the specific gravity readings are an indication of loss of battery continuity.

F. When should I check the station batteries to see if they have sufficient energy to perform as designed?

The answer to this question depends on the type of battery (valve regulated lead-acid, vented lead acid, or nickel-cadmium), the maintenance activity chosen, and the type of time based monitoring level selected.

For example, if you have a Valve Regulated Lead-Acid (VRLA) station battery, and you have chosen to evaluate the measured cell/unit internal ohmic values to the battery cell's baseline,

you will have to perform verification at a maximum maintenance interval of no greater than every three months.

If, for a VRLA station battery, you choose to conduct a performance capacity test on the entire station battery as the maintenance activity, then you will have to perform verification at a maximum maintenance interval of no greater than every 3 calendar years.

G. Why in Table 1 are there two Maintenance Activities with different Maximum Maintenance Intervals listed to verify that the station battery can perform as designed?

The two acceptable methods for proving that a station battery can perform as designed are based on two different philosophies. The first activity requires a capacitive discharge test of the entire battery set to prove that degradation of one or several components (cells) in the set has not deteriorated to a point where the total capacity of the battery system falls below its designed rating. The second maintenance activity requires tests and evaluation of the internal ohmic measurements on each of the individual cells/units of the battery set to determine that each component can perform as designed and therefore the entire battery set can be proven to perform as designed.

The maximum maintenance interval for discharge capacity testing is longer than the interval for testing and evaluation of internal ohmic cell measurements. An individual component of a battery set may degrade to an unacceptable level without causing the total battery set to fall below its designed rating under capacity testing. However, since the philosophy behind internal ohmic measurement evaluation is based on the fact that each battery component must be proven to be able to perform as designed, the interval for verification by this maintenance activity must be shorter to catch individual cell/unit degradation.

H. What is the justification for having two different Maintenance Activities listed in Table 1 to verify that the station battery can perform as designed?

IEEE Standards 450, 1188, and 1106 for vented lead-acid, valve-regulated lead-acid (VRLA), and nickel-cadmium batteries, respectively (which together are the most commonly used substation batteries on the BES) go into great detail about capacity testing of the entire battery set to determine that a battery can perform as designed.

The first maintenance activity listed in Table 1 for verifying that a station battery can perform as designed uses maximum maintenance intervals for capacity testing that were designed to align with the IEEE battery standards. This maintenance activity is applicable for vented lead-acid, valve-regulated lead-acid, and nickel-cadmium batteries.

The second maintenance activity listed in Table 1 for verifying that a station battery can perform as designed uses maximum maintenance intervals for evaluating internal ohmic measurements in relation to their baseline measurements that are based on industry experience, EPRI technical reports and application guides, and the IEEE battery standards. By evaluating the internal ohmic measurements for each cell and comparing that measurement to the cell's baseline ohmic measurement (taken at the time of the battery set's acceptance capacity test), low-capacity cells can be identified and eliminated to keep the battery set capable of performing as designed. This maintenance activity is applicable only for vented lead-acid and VRLA batteries.

I. Why in Table 1 of PRC-005-2 is there a maintenance activity to inspect the structural intergrity of the battery rack?

The three IEEE standards (1188, 450, and 1106) for VRLA, vented lead-acid, and nickel-cadmium batteries all recommend that as part of any battery inspection the battery rack should be inspected. The purpose of this inspection is to prove that the battery rack is correctly installed and has no deterioration that could weaken its structural integrity. Because the battery rack is specifically designed for the battery that is mounted on it, weakening of its structural members by rust or corrosion can physically jeopardize the battery.

6. Protection System Communications Equipment

A. What are some examples of mechanisms to check communications equipment functioning?

For Level 1 unmonitored Protection Systems, various types of communications systems will have different facilities for on-site integrity checking to be performed at least every three months during a substation visit. Some examples are:

- ◊ On-off power-line carrier systems can be checked by performing a manual carrier keying test between the line terminals, or carrier checkback test from one terminal.
- ◊ Systems which use frequency-shift communications with a continuous guard signal (over a telephone circuit, analog microwave system, etc.) can be checked by observing a loss-of-guard indication or alarm. For frequency-shift power line power-line carrier systems, the guard signal level meter can also be checked.
- ◊ Hard-wired pilot wire line Protection Systems typically have pilot-wire monitoring relays that give an alarm indication for a pilot wire ground or open pilot wire circuit loop.
- ◊ Digital communications systems have some sort of data reception indicator or data error indicator (based on loss of signal, bit error rate, or frame error checking).

For Level 2 partially monitored Protection Systems, various types of communications systems will have different facilities for monitoring the presence of the communications channel, and activating alarms that can be monitored remotely. Some examples are:

- ◊ On-off power-line carrier systems can be shown to be operational by automated periodic power-line carrier checkback tests, with remote alarming of failures.
- ◊ Systems which use a frequency-shift communications with a continuous guard signal (over a telephone circuit, analog microwave system, etc.) can be remotely monitored with a loss-of-guard alarm or low signal level alarm.
- ◊ Hard-wired pilot wire line Protection Systems can be monitored by remote alarming of pilot-wire monitoring relays.
- ◊ Digital communications systems can activate remotely monitored alarms for data reception loss or data error indications.

For Level 3 fully monitored Protection Systems, the communications system must monitor all aspects of the performance and quality of the channel that show it meets the design performance criteria, including monitoring of the channel interface to protective relays.

- ◊ In many communications systems signal quality measurements including signal-to-noise ratio, received signal level, reflected transmitter power or standing wave ratio, propagation delay, and data error rates are compared to alarm limits. These alarms are connected for remote monitoring.

- ◊ Alarms for inadequate performance are remotely monitored at all times, and the alarm communications system to the remote monitoring site must itself be continuously monitored to assure that the actual alarm status at the communications equipment location is continuously being reflected at the remote monitoring site.

B. What is needed for the 3-month inspection of communication-assisted trip scheme equipment?

The 3-month inspection applies to Level 1 (Unmonitored) equipment. With each site visit, check that the equipment is free from alarms, check any metered signal levels, and that power is still applied.

C. Does a fiber optic I/O scheme used for breaker tripping or control within a station, for example - transmitting a trip signal or control logic between the control house and the breaker control cabinet, constitute a communication system?

This equipment is presently classified as being part of the Protection System Control Circuitry and tested per the portions of Table 1 applicable to Protection System Control Circuitry rather than those portions of the table applicable to communication equipment.

D. In Table 1b, the Maintenance Activities section of the Protective System Communications Equipment and Channels refers to the quality of the channel meeting "performance criteria". What is meant by performance criteria?

Protection System communications channels must have a means of determining if the channel and communications equipment is operating normally. If the channel is not operating normally an alarm will be indicated. For Level 1 systems this alarm will probably be on the panel. For Level 2 and Level 3 systems, the alarm will be transmitted to a remote location.

Each entity will have established a nominal performance level for each protective system communications channel that is consistent with proper functioning of the Protection System. If that level of nominal performance is not being met, the system will go into alarm. Following are some examples of protective system communications channel performance criteria:

- ◊ For direct transfer trip using a frequency shift power line carrier channel, a guard level monitor is part of the equipment. A normal receive level is established when the system is calibrated and if the signal level drops below an established level, the system will indicate an alarm.
- ◊ An on-off blocking signal over power line carrier is used for directional comparison blocking schemes on transmission lines. During a fault, block logic is sent to the remote relays by turning on a local transmitter and sending the signal over the power line to a receiver at the remote end. This signal is normally off so continuous levels cannot be checked. These schemes use checkback testing to determine channel performance. A predetermined signal sequence is sent to the remote end and the remote end decodes this signal and sends a signal sequence back. If the sending end receives the correct information from the remote terminal, the test passes and no alarm is indicated. Full power and reduced power tests are typically run. Power levels for these tests are determined at the time of calibration.
- ◊ Pilot wire relay systems use a hardwire communications circuit to communicate between the local and remote ends of the protective zone. This circuit is monitored by circulating a

dc current between the relay systems. A typical level may be 1 mA. If the level drops below the setting of the alarm monitor, the system will indicate an alarm.

◊ Modern digital relay systems use data communications to transmit relay information to the remote end relays. An example of this is a line current differential scheme commonly used on transmission lines. The protective relays communicate current magnitude and phase information over the communications path to determine if the fault is located in the protective zone. Quantities such as digital packet loss, bit error rate and channel delay are monitored to determine the quality of the channel. These limits are determined and set during relay commissioning. Once set, any channel quality problems that fall outside the set levels will indicate an alarm.

The previous examples show how some protective relay communications channels can be monitored and how the channel performance can be compared to performance criteria established by the entity. This standard does not state what the performance criteria will be - it just requires that the entity establish nominal criteria so protective system channel monitoring can be performed.

7. UVLS and UFLS Relays that Comprise a Protection System Distributed Over the Power System

A. We have an Under Voltage Load Shedding (UVLS) system in place that prevents one of our distribution substations from supplying extremely low voltage in the case of a specific transmission line outage. The transmission line is part of the BES. Does this mean that our UVLS system falls within this standard?

The situation as stated indicates that the tripping action was intended to prevent low distribution voltage for a transmission system that was intact except for the line that was out of service.

This Standard is not applicable to this UVLS.

UVLS installed to prevent system voltage collapse or voltage instability for BES reliability is covered by this standard.

8. SPS or Relay Sensing for Centralized UFLS or UVLS

A. Do I have to perform a full end-to-end test of a Special Protection System?

No. All portions of the SPS need to be maintained, and the portions must overlap, but the overall SPS does not need to have a single end-to-end test.

B. What about SPS interfaces between different entities or owners?

All SPS owners should have maintenance agreements that state which owner will perform specific tasks. SPS segments can be tested individually, but must overlap.

C. What do I have to do if I am using a phasor measurement unit (PMU) as part of a Protection System or Special Protection System?

Any Phasor Measurement Unit (PMU) function whose output is used in a protection system or Special Protection System (as opposed to a monitoring task) must be verified as a component in a Protection System.

D. How do I maintain a Special Protection System or Relay Sensing for Centralized UFLS or UVLS Systems?

Components of the SPS, UFLS, or UVLS should be maintained like similar components used for other Protection System functions.

The output action verification may be breaker tripping, or other control action that must be verified, but may be verified in overlapping segments. A grouped output control action need be verified only once within the specified time interval, but all of the SPS, UFLS, or UVLS components whose operation leads to that control action must each be verified.

Group by Type of BES Facility:

1. All BES Facilities

A. What, exactly, is the BES, or Bulk Electric System?

BES is the abbreviation for Bulk Electric System. BES is a term in the Glossary of Terms Used in Reliability Standards, and is not being modified within this draft Standard.

NERC's approved definition of Bulk Electric System is:

> As defined by the Regional Reliability Organization, the electrical generation resources, transmission lines, interconnections with neighboring systems, and associated equipment, generally operated at voltages of 100 kV or higher. Radial transmission facilities serving only load with one transmission source are generally not included in this definition.

Each Regional Entity implements a definition of the Bulk Electric System that is based on this NERC definition, in some cases, supplemented by additional criteria. These regional definitions have been documented and provided to FERC as part of a *June 16, 2007 Informational Filing*.

2. Generation

A. Please provide a sample list of devices or systems that must be verified in a generator, generator step-up transformer, and generator connected station auxiliary transformer to meet the requirements of this Maintenance Standard.

Examples of typical devices and systems that may directly trip the generator, or trip through a lockout relay may include but are not necessarily limited to:

- Fault protective functions, including distance functions, voltage-restrained overcurrent functions, or voltage-controlled overcurrent functions
- Loss-of-field relays
- Volts-per-hertz relays
- Negative sequence overcurrent relays
- Over voltage and under voltage protection relays
- Stator-ground relays
- Communications-based protection systems such as transfer-trip systems
- Generator differential relays

- Reverse power relays
- Frequency relays
- Out-of-step relays
- Inadvertent energization protection
- Breaker failure protection

For generator step up or generator connected station auxiliary transformers, operation of any the following associated protective relays frequently would result in a trip of the generating unit and, as such, would be included in the program:

- Transformer differential relays
- Neutral overcurrent relay
- Phase overcurrent relays

A loss of a system connected station auxiliary transformer could result in a loss of the generating plant if the plant was being provided with auxiliary power from that source. Thus, operation of any of the following relays associated with system connected station auxiliary transformers would be included in the program:

- Transformer differential relays
- Neutral overcurrent relay
- Phase overcurrent relays

Relays which trip breakers serving station auxiliary loads such as pumps, fans, or fuel handling equipment, etc., need not be included in the program even if the loss of the those loads could result in a trip of the generating unit.

3. Transmission

A. Why is Distribution Provider included within the Applicable Entities and as a responsible entity within several of the requirements? Wouldn't anyone having relevant facilities be a Transmission Owner?

Depending on the station configuration of a particular substation, there may be Protection System equipment installed at a non-transmission voltage level (Distribution Provider equipment) that is wholly or partially installed to protect the BES. PRC-005-2 would apply to this equipment. An example is underfrequency load-shedding, which is frequently applied well down into the distribution system to meet PRC-007-0.

Group by Type of Maintenance Program:

1. All Protection System Maintenance Programs

A. I can't figure out how to demonstrate compliance with the requirements for level 3 (fully monitored) Protection Systems. Why does this Maintenance Standard describe a maintenance program approach I cannot achieve?

Demonstrating compliance with the requirements for level 3 (fully monitored) Protection Systems is likely to be very involved, and may include detailed manufacturer documentation of complete internal monitoring within a device, comprehensive design drawing reviews, and

other detailed documentation. This Standard does not presume to specify what documentation must be developed; only that it must be comprehensive.

There may actually be some equipment available that is capable of meeting level-3 monitoring criteria, in which case it may be maintained according to Table 1c. However, even if there is no equipment available today that can meet this level of monitoring, the Standard establishes the necessary requirements for when such equipment becomes available.

By creating a roadmap for development, this provision makes the Standard technology-neutral. The standard drafting team wants to avoid the need to revise the Standard in a few years to accommodate technology advances that are certainly coming to the industry.

B. What forms of evidence are acceptable?

Acceptable forms of evidence, as relevant for the Requirement being documented, include but are not limited to:

- Process documents or plans
- Data (such as relay settings sheets, photos, SCADA, and test records)
- Database screen shots that demonstrate compliance information
- Diagrams, engineering prints, schematics, maintenance and testing records, etc.
- Logs (operator, substation, and other types of log)
- U.S. or Canadian mail, memos, or email proving the required information was exchanged, coordinated, submitted or received
- Database lists

C. If I replace a failed Protection System component with another component, what testing do I need to perform on the new component?

The replacement component must be tested to a degree that assures that it will perform as intended. If it is desired to reset the Table 1 maintenance interval for the replacement component, all relevant Table 1 activities for the component should be performed.

2. Time-Based Protection System Maintenance (TBM) Programs

A. What does this Maintenance Standard say about commissioning?

Commissioning tests are regarded as a construction activity, not a maintenance activity.

B. The established maximum allowable intervals do not align well with the scheduled outages for my power plant. Can I extend the maintenance to the next scheduled outage following the established maximum interval?

No. You must complete your maintenance within the established maximum allowable intervals in order to be compliant. You will need to schedule your maintenance during available outages to complete your maintenance as required, even if it means that you may do protective relay maintenance more frequently than the maximum allowable intervals.

C. If I am unable to complete the maintenance as required due to a major natural disaster (hurricane, earthquake, etc), how will this affect my compliance with this standard.

The NERC Sanction Guidelines provides that the Compliance Monitor will consider extenuating circumstances when considering any sanctions.[1]

D. What if my observed testing results show a high incidence of out-of-tolerance relays, or, even worse, I am experiencing numerous relay misoperations due to the relays being out-of-tolerance?

Any entity can choose to test some or all of their Protection System more frequently (or, to express it differently, exceed the minimum requirements of the Standard). Particularly, if you find that the maximum intervals in the Standard do not achieve your expected level of performance, it is understandable that you would maintain the related equipment more frequently.

3. Performance-Based Protection System Maintenance (PBM) Programs

A. I'm a small entity and cannot aggregate a population of Protection System components to establish a segment required for a Performance-Based Protection System Maintenance Program. How can I utilize that opportunity?

Multiple asset owning entities may aggregate their individually owned populations of individual Protection System components to create a segment that crosses ownership boundaries. All entities participating in a joint program should have a single documented joint management process, with consistent Protection System Maintenance Programs (practices, maintenance intervals and criteria), for which the multiple owners are individually responsible with respect to the requirements of the Standard. The requirements established for performance-based maintenance must be met for the overall aggregated program on an ongoing basis.

The aggregated population should reflect all factors that affect consistent performance across the population, including any relevant environmental factors such as geography, power-plant vs. substation, and weather conditions.

B. Can an owner go straight to a performance-based maintenance program schedule, if they have previously gathered records?

Yes. An owner can go to a performance-based maintenance program immediately. The owner will need to comply with the requirements of a performance-based maintenance program as listed in the standard. Gaps in the data collected will not be allowed; therefore, if an owner finds that a gap exists such that they can not prove that they have collected the data as required for a performance-based maintenance program then they will need to wait until they can prove compliance.

C. When establishing a perfomance-based maintenance program, can I use test data from the device manufacturer, or industry survey results, as results to help establish a basis for my performance-based intervals?

No. You must use actual in-service test data for the components in the segment.

D. What types of misoperations or events are not considered countable events in the performance-based Protection System Maintenance (PBM) Program?

1 Sanction Guidelines of the North American Electric Reliability Corporation. Effective January 15, 2008.

Countable events are intended to address conditions that are attributed to hardware failure or calibration failure; that is, conditions that reflect deteriorating performance of the component. These conditions include any condition where the device previously worked properly, then, due to changes within the device, malfunctioned.

Human errors resulting in Protection System Misoperations during system installation or maintenance activities are not considered countable events. Examples of excluded human errors include relay setting errors, design errors, wiring errors, inadvertent tripping of devices during testing or installation, and misapplication of Protection System components. Examples of misapplication of Protection System components include wrong CT or PT tap position, protective relay function misapplication, and components not specified correctly for their installation.

Certain types of Protection System component errors that cause Misoperations are not considered countable events. Examples of excluded component errors include device malfunctions that are correctable by firmware upgrades and design errors that do not impact protection function.

E. What are some examples of methods of correcting segment perfomance for Performance-Based Maintenance?

There are a number of methods that may be useful for correcting segment performance for mal-performing segments in a performance-based maintenance system. Some examples are listed below.

- The maximum allowable interval, as established by the performance-based maintenance system, can be decreased. This may, however, be slow to correct the performance of the segment.
- Identifiable sub-groups of components within the established segment, which have been identified to be the mal-performing portion of the segment, can be broken out as an independent segment for target action. Each resulting segment must satisfy the minimum population requirements for a performance-based maintenance program in order to remain within the program.
- Targeted corrective actions can be taken to correct frequently occurring problems. An example would be replacement of capacitors within electromechanical distance relays if bad capacitors were determined to be the cause of the mal-performance.
- Components within the mal-performing segment can be replaced with other components (electromechanical distance relays with microprocessor relays, for example) to remove the mal-performing segment.

F. If I find (and correct) a maintenance-correctable issue as a result of a misoperation investigation (Re: PRC-004), how does this affect my performance-based maintenance program?

If you perform maintenance on a Protection System component for any reason (including as part of a PRC-004 required misoperation investigation/corrective action), the actions performed count as a maintenance activity, and “reset the clock” on everything you’ve done. In a performance-based maintenance program, you also need to record the maintenance-correctable issue with the relevant component group and use it in the analysis to determine your correct performance-based maintenance interval for that component group.

G. Why are batteries excluded from PBM? What about exclusion of batteries from condition based maintenance?

Batteries are the only element of a Protection System that is a perishable item with a shelf life. As a perishable item batteries require not only a constant float charge to maintain their freshness (charge), but periodic inspection to determine if there are problems associated with their aging process and testing to see if they are maintaining a charge or can still deliver their rated output as required.

Besides being perishable, a second unique feature of a battery that is unlike any other Protection System element is that a battery uses chemicals, metal alloys, plastics, welds, and bonds that must interact with each other to produce the constant dc source required for Protection Systems, undisturbed by ac system disturbances.

No type of battery manufactured today for Protection System application is free from problems that can only be detected over time by inspection and test. These problems can arise from variances in the manufacturing process, chemicals and alloys used in the construction of the individual cells, quality of welds and bonds to connect the components, the plastics used to make batteries and the cell forming process for the individual battery cells.

Other problems that require periodic inspection and testing can result from transportation from the factory to the job site, length of time before a charge is put on the battery, the method of installation, the voltage level and duration of equalize charges, the float voltage level used, and the environment that the battery is installed in.

All of the above mentioned factors and several more not discussed here are beyond the control of the Functional Entities that want to use a Performance-based Protection System Maintenance (PBM) program. These inherent variances in the aging process of a battery cell make establishment of a designated segment based on manufacturer and type of battery impossible.

The whole point of PBM is that if all variables are isolated then common aging and performance criteria would be the same. However, there are too many variables in the electro-chemical process to completely isolate all of the performance-changing criteria.

Similarly Functional Entities that want to establish a condition based maintenance program using Level 3 monitoring of the battery used in a station dc supply can not do so. Inspection of the battery is required on a Maximum Maintenance Interval listed in the tables due to the aging processes of station batteries. However, Level 3 monitoring of a battery can eliminate the requirement for periodic testing and some inspections (see Level 3 Monitoring Attributes for Component of table 1c).

Group by Monitoring Level:

1. All Monitoring Levels

A. Please provide an example of the level 1 monitored (unmonitored) versus other levels of monitoring available?

A level 1 (Unmonitored) Protection System has no monitoring and alarm circuits on the Protection System components.

A level 2 (Partially) monitored Protection System or an individual component of a level 2 (Partially) monitored Protection System has monitoring and alarm circuits on the Protection System components. The alarm circuits must alert a 24-hr staffed operations center.

There can be a combination of monitored and unmonitored Protection Systems within any given substation or plant; there can also be a combination of monitored and unmonitored components within any given Protection System.

Example #1: A combination of level 2 (Partially) monitored and level 1 (unmonitored) components within a given Protection System is:

- ◊ A microprocessor relay with an internal alarm connected to SCADA to alert 24-hr staffed operations center. (level 2)
- ◊ Instrumentation transformers, with no monitoring, connected as inputs to that relay. (level 1)
- ◊ A vented lead-acid battery with low voltage alarm connected to SCADA. (level 2)
- ◊ A circuit breaker with a trip coil, with no monitor circuit. (level 1)

Given the particular components, conditions, and using the Table 1 ("Maximum Allowable Testing Intervals and Maintenance Activities"), the particular components have maximum test intervals of:

- ◊ The microprocessor relay is verified every 12 calendar years.
- ◊ The instrumentation transformers are verified every 12 calendar years.
- ◊ The battery is verified every 6 calendar years by performing a performance capacity test of the entire battery bank or by evaluating the measured cell/unit internal ohmic values to station battery baseline every 18 months.
- ◊ The circuit breaker trip circuits and auxiliary relays are tested every 6 calendar years.

Example #2: A combination of level 2 (partially) monitored and level 1 (unmonitored) components within a given Protection System is:

- ◊ A microprocessor relay with integral alarm that is not connected to SCADA. (level 1)
- ◊ Instrument transformers, with no monitoring, connected as inputs to that relay. (level 1)
- ◊ A vented lead-acid battery with low voltage alarm connected to SCADA. (level 2)
- ◊ A circuit breaker with a trip coil, with no circuits monitored. (level 1)

Given the particular components, conditions, and using the Table 1 ("Maximum Allowable Testing Intervals and Maintenance Activities"), the particular components have maximum test intervals of:

- ◊ The microprocessor relay is verified every 6 calendar years.
- ◊ The instrumentation transformers are verified every 12 calendar years.
- ◊ The battery is verified every 6 calendar years by performing a performance capacity test of the entire battery bank or by evaluating the measured cell/unit internal ohmic values to station battery baseline every 18 months.
- ◊ The circuit breaker trip circuits and auxiliary relays are tested every 6 calendar years.

Example #3: A combination of level 2 (partially) monitored and level 1 (unmonitored) components within a given Protection System is:

- ◊ A microprocessor relay with alarm connected to SCADA to alert 24-hr staffed operations center. (level 2)
- ◊ Instrument transformers, with no monitoring, connected as inputs to that relay (level 1)
- ◊ Battery without any alarms connected to SCADA (level 1)
- ◊ Circuit breaker with a trip coil, with no circuits monitored (level 1)

Given the particular components, conditions, and using the Table 1 ("Maximum Allowable Testing Intervals and Maintenance Activities"), the particular components have maximum test intervals of:

- ◊ The microprocessor relay is verified every 12 calendar years.
- ◊ The instrument transformers are verified every 12 calendar years.
- ◊ The battery is verified every 3 months, every 18 months, plus, depending upon the type of battery used it may be verified at other maximum test intervals, as well.
- ◊ The circuit breaker trip circuits and auxiliary relays are tested every 6 calendar years.

B. What is the intent behind the different levels of monitoring?

The intent behind different levels of monitoring is to allow less frequent manual intervention when more information is known about the condition of Protection System components.

C. Do all monitoring levels apply to all components in a protection system?

No. For some components in a protection system, certain levels of monitoring will not be relevant. See table below:

Monitoring Level Applicability Table

(See related definition and decision tree for various level requirements)

Protection Component	Level 1 (Unmonitored)	Level 2 (Partially Monitored)	Level 3 (Fully Monitored)
Protective relays	Y	Y	Y
Instrument transformer Inputs to Protective Relays	Y	N	Y
Protection System control circuitry (Other than aux-relays & lock-out relays)	Y	Y	Y
Aux-relays & lock-out relays	Y	N	N
DC supply (other than station batteries)	Y	Y	Y
Station batteries	Y	N	N
Protection system communications equipment and channels	Y	Y	Y
UVLS and UFLS relays that comprise a protection scheme distributed over the power system	Y	Y	Y
SPS, including verification of end-to-end performance, or relay sensing for centralized UFLS or UVLS systems	Y	Y	Y

Y = Monitoring Level Applies
N = Monitoring Level Not Applicable

D. When documenting the basis for inclusion of components into the appropriate levels of monitoring as per Requirement R2 of the standard, is it necessary to provide this documentation via a device by device listing of components and the specific monitoring attributes of each device?

No. While maintaining this documentation on the device level would certainly be permissible, it is not necessary. Global statements can be made to document appropriate levels of monitoring for the entire population of a component type or portion thereof.

For example, it would be permissible to document the conclusion that all BES substation dc systems are Level 2 - Partially Monitored by stating the following within the program description:

> "All substation dc systems are considered Level 2 - Partially Monitored and subject to Table 1b requirements as all substation dc systems are equipped with dc voltage alarms and ground detection alarms that are sent to the manned control center."

Similarly, it would be acceptable to use a combination of a global statement and a device level list of exclusions. Example:

> "Except as noted below, all substation dc systems are considered Level 2 - Partially Monitored and subject to Table 1b requirements as all substation dc systems are equipped with dc voltage alarms and ground detection alarms that are sent to the manned control center. The dc systems of Substation X, Substation Y, and Substation Z are considered Level 1 - Unmonitored and subject to Table 1a requirements as they are not equipped with ground detection capability."

Regardless whether this documentation is provided via a device by device listing of monitoring attributes, by global statements of the monitoring attributes of an entire population of component types, or by some combination of these methods, it should be noted that auditors may request supporting drawings or other documentation necessary to validate the inclusion of the device(s) within the appropriate level of monitoring. This supporting background information need not be maintained within the program document structure but should be retrievable if requested by an auditor.

E. How do I know what monitoring level I am under? – Include Decision Trees

Decision Trees are provided below for each of the following categories of equipment to assist in the determination of the level of monitoring.

- ◊ Protective Relays
- ◊ Protection System Control Circuitry
- ◊ Station dc Supply
- ◊ Protection System Communications Equipment and Channels

RELAY - MONITOR LEVEL DECISION TREE

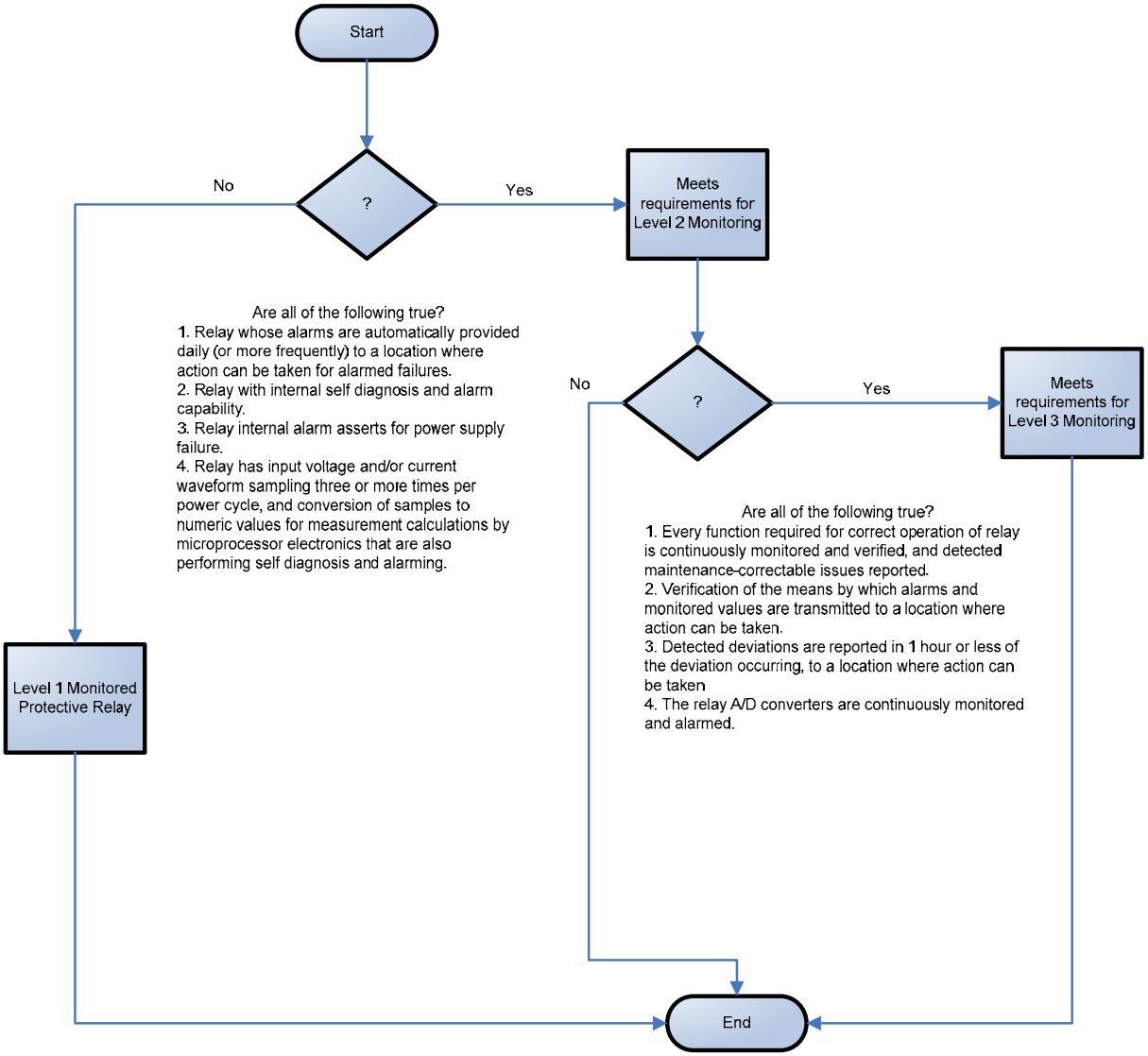

CONTROL CIRCUIT - MONITOR LEVEL DECISION TREE

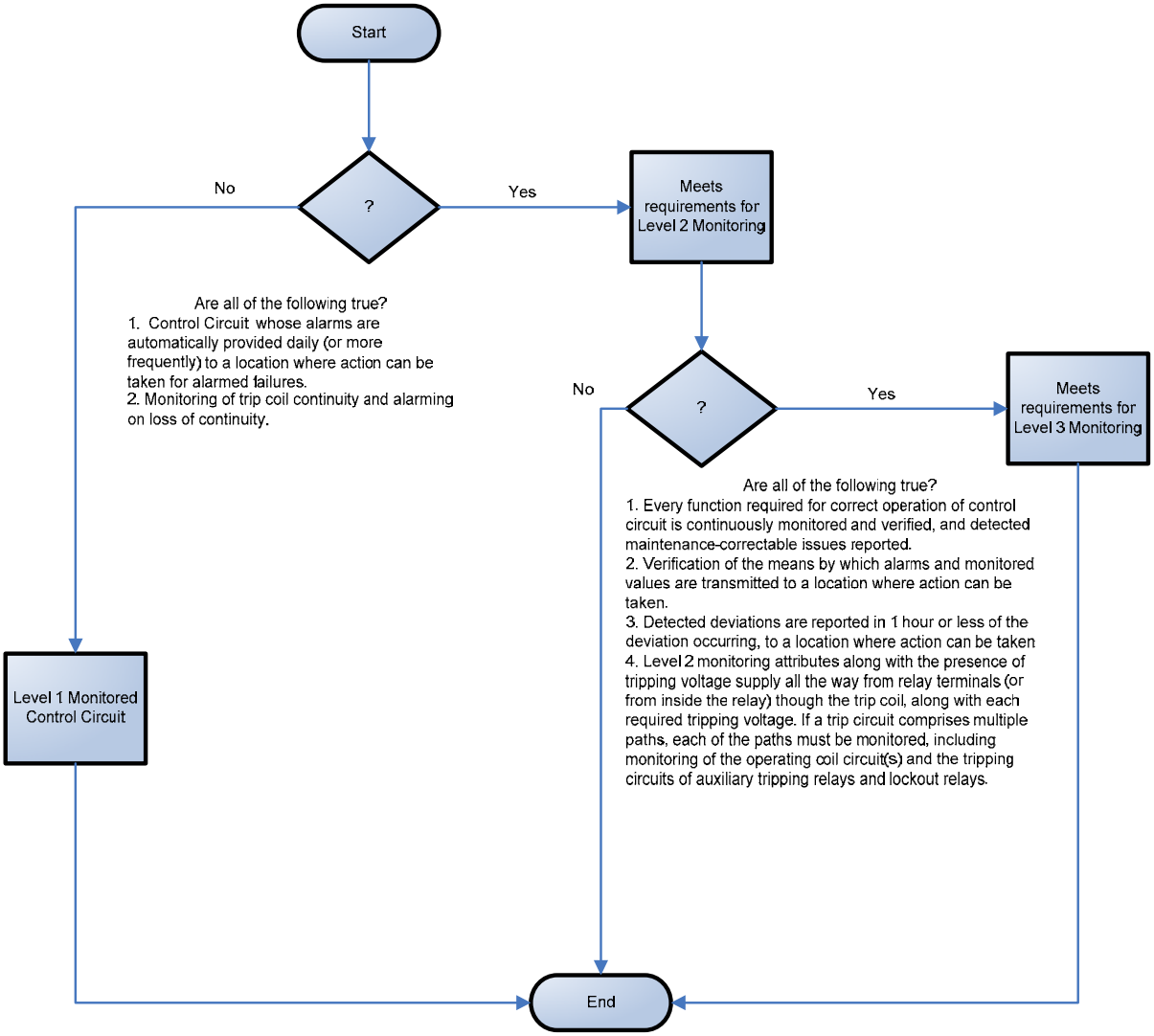

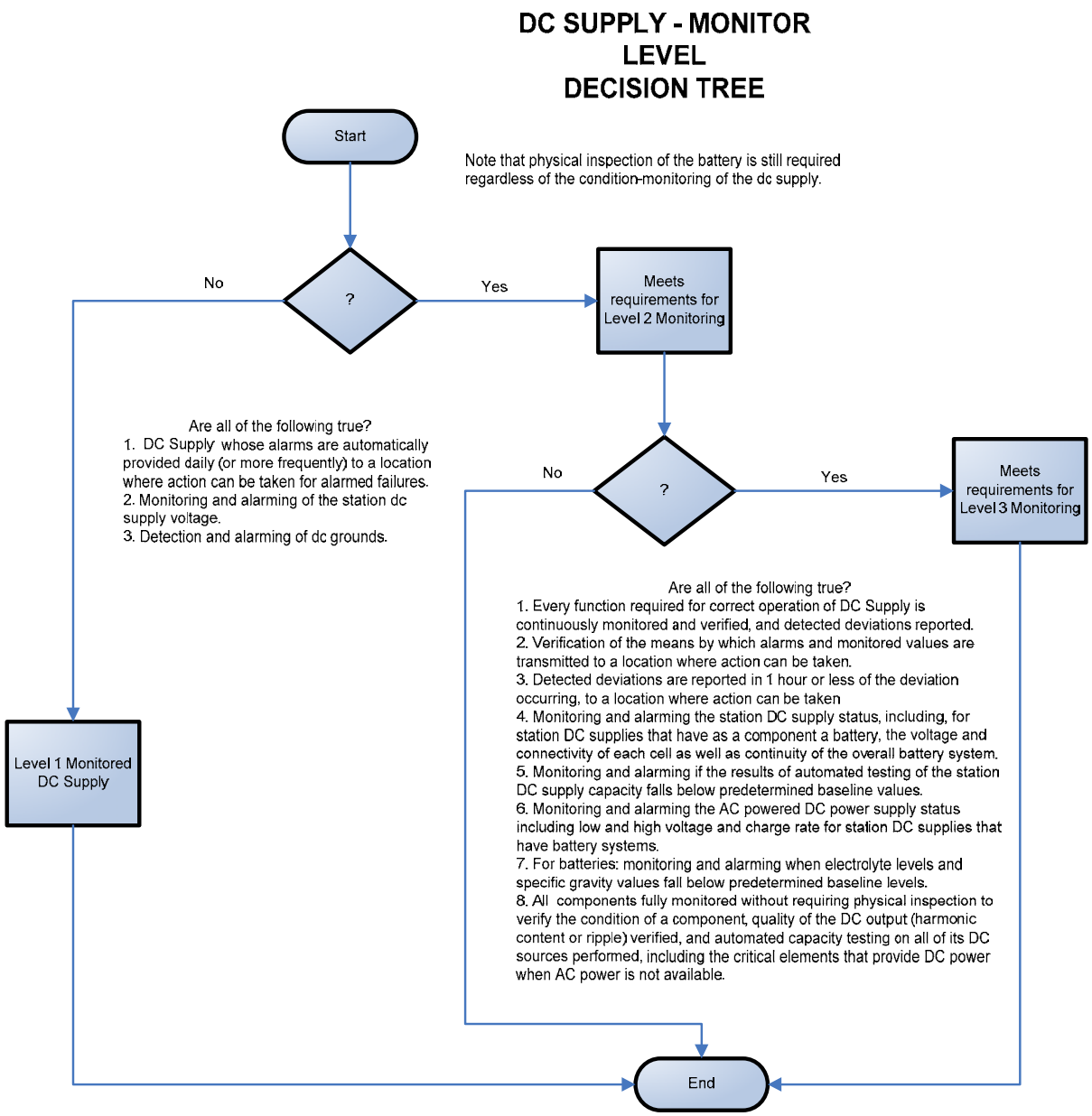
DC SUPPLY - MONITOR LEVEL DECISION TREE
Start
Note that physical inspection of the battery is still required regardless of the condition-monitoring of the dc supply.
?
No
Yes
Meets requirements for Level 2 Monitoring
Are all of the following true?
1. DC Supply whose alarms are automatically provided daily (or more frequently) to a location where action can be taken for alarmed failures.
2. Monitoring and alarming of the station dc supply voltage.
3. Detection and alarming of dc grounds.
?
No
Yes
Meets requirements for Level 3 Monitoring
Are all of the following true?
1. Every function required for correct operation of DC Supply is continuously monitored and verified, and detected deviations reported.
2. Verification of the means by which alarms and monitored values are transmitted to a location where action can be taken.
3. Detected deviations are reported in 1 hour or less of the deviation occurring, to a location where action can be taken
4. Monitoring and alarming the station DC supply status, including, for station DC supplies that have as a component a battery, the voltage and connectivity of each cell as well as continuity of the overall battery system.
5. Monitoring and alarming if the results of automated testing of the station DC supply capacity falls below predetermined baseline values.
6. Monitoring and alarming the AC powered DC power supply status including low and high voltage and charge rate for station DC supplies that have battery systems.
7. For batteries: monitoring and alarming when electrolyte levels and specific gravity values fall below predetermined baseline levels.
8. All components fully monitored without requiring physical inspection to verify the condition of a component, quality of the DC output (harmonic content or ripple) verified, and automated capacity testing on all of its DC sources performed, including the critical elements that provide DC power when AC power is not available.
Level 1 Monitored DC Supply
End

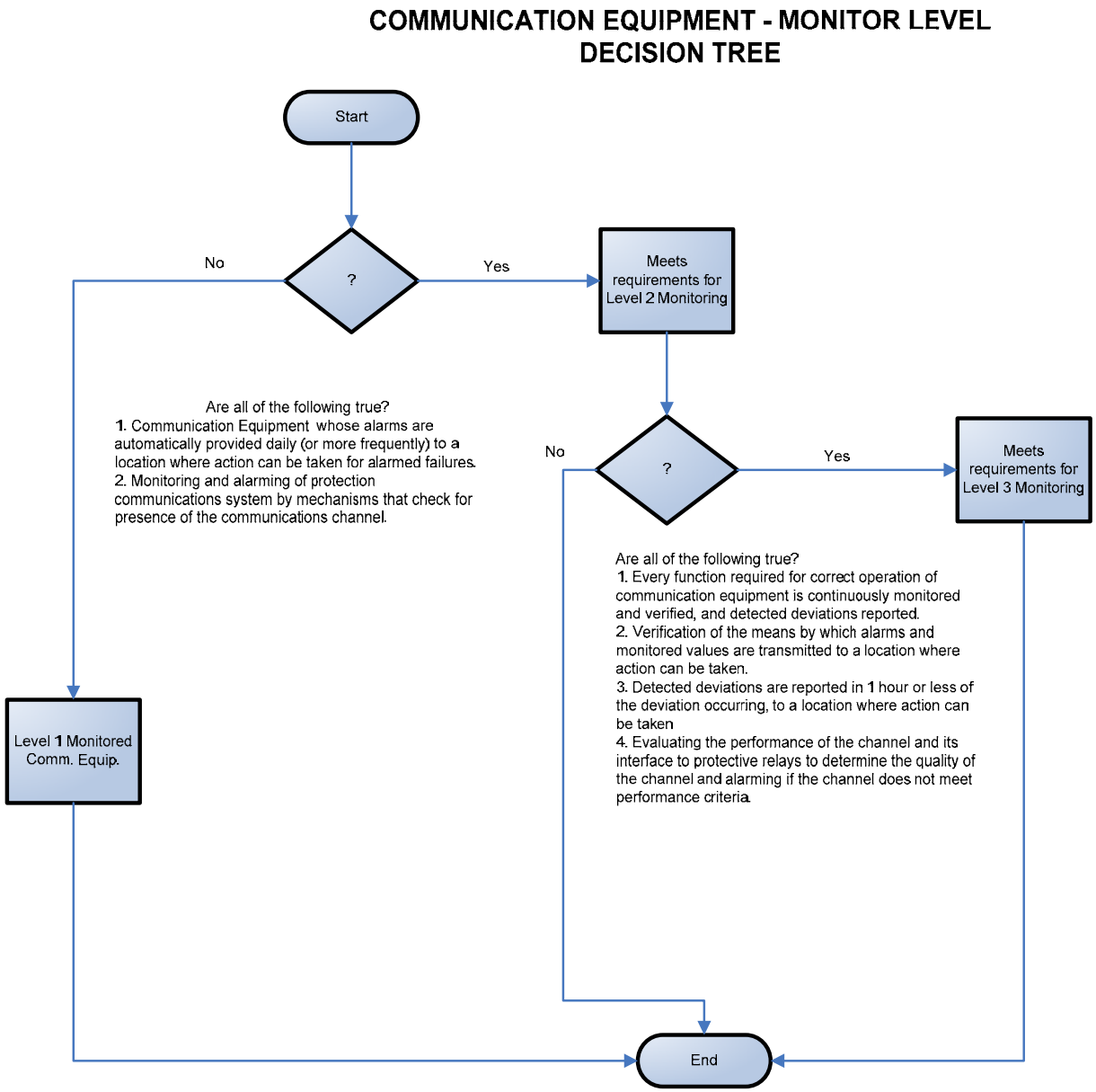

2. Level 1 Monitored Protection Systems (Unmonitored Protection Systems)

A. We have an electromechanical (unmonitored) relay that has a trip output to a lockout relay (unmonitored) which trips our transformer off-line by tripping the transformer's high-side and low-side circuit breakers. What testing must be done for this system?

This system is made up of components that are level 1 (unmonitored). Assuming a time-based protection system maintenance program schedule, each component must be maintained per Table 1a – Level 1 Monitoring Maximum Allowable Testing Intervals and Maintenance Activities.

3. Level 2 Monitored Protection Systems (Partially Monitored Protection Systems)

A. We have a 30 year old oil circuit breaker with a red indicating lamp on the substation relay panel that is illuminated only if there is continuity through the breaker trip coil. There is no SCADA monitor or relay monitor of this trip coil. The line protection relay package that trips this circuit breaker is a microprocessor relay that has an integral alarm relay that will assert on a number of conditions that includes a loss of power to the relay. This alarm contact connects to our SCADA system and alerts our 24-hour operations center of relay trouble when the alarm contact closes. This microprocessor relay trips the circuit breaker only and does not monitor trip coil continuity or other things such as trip current. Is this an unmonitored or a partially-monitored system? How often must I perform maintenance?

The protective relay is a level 2 (partially) monitored component of your protection system and can be maintained every 12 years or when a maintenance correctable issue arises. Assuming a time-based protection system maintenance program schedule, this component must be maintained per Table 1b – Level 2 Monitoring Maximum Allowable Testing Intervals and Maintenance Activities

The rest of your protection system contains components that are level 1 (unmonitored) and must be maintained within at least the maximum verification intervals of Table 1a.

B. How do I verify the A/D converters of microprocessor-based relays?

There are a variety of ways to do this. Examples include using values gathered via data communications and automatically comparing these values with values from other sources, and using groupings of other measurements (such as vector summation of bus feeder currents) for comparison if calibration requirements assure acceptable measurement of power system input values. Other methods are possible.

C. For a level 2 monitored Protection System (Partially Monitored Protection System) pertaining to Protection System communications equipment and channels, how is the performance criteria involved in the maintenance program?

The entity determines the performance criteria for each installation, depending on the technology implemented. If the communication channel performance of a Protection System varies from the pre-determined performance criteria for that system, these results should be investigated and resolved.

4. Level 3 Monitored Protection Systems (Fully Monitored Protection Systems)

A. Why are there activities defined for a level-3 monitored Protection System? The technology does not seem to exist at this time to implement this monitoring level.

There may actually be some equipment available that is capable of meeting level-3 monitoring criteria, in which case it may be maintained according to Table 1c.

However, even if there is no equipment available today that can meet this level of monitoring, the Standard establishes the necessary requirements for when such equipment becomes available. By creating a roadmap for development, this provision makes the Standard technology-neutral. The standard drafting team wants to avoid the need to revise the Standard in a few years to accommodate technology advances that are certainly coming to the industry.

Appendix A — Protection System Maintenance Standard Drafting Team

Charles W. Rogers
Chairman
Consumers Energy Co.

John B. Anderson
Xcel Energy

Merle E. Ashton
Tri-State Transmission and Generation Cooperative

Bob Bentert
Florida Power & Light Company

Al Calafiore
NERC Staff
North American Electric Reliability Corporation

John Ciufo
Hydro One Inc

Richard Ferner
Western Area Power Administration

Carol A Gerou
Midwest Reliability Organization

Roger D Greene
Southern Company Generation

Russell C Hardison
Tennessee Valley Authority

David Harper
NRG Texas Maintenance Services

John Kruse
ComEd

Mark Peterson
Great River Energy

William Shultz
Southern Company Generation

Leonard Swanson, Jr
National Grid USA

Eric A Udren
Quanta Technology

Philip B Winston
Georgia Power Company

John A Zipp
ITC Holdings

Assessment of Impact of Proposed Modification to the Definition of "Protection System"

Existing Definition:

Protection System — Protective relays, associated communication systems, voltage and current sensing devices, station batteries, and DC control circuitry.

Proposed Definition (Clean):

Protection System - Protective relays, associated communication systems necessary for correct operation of protective devices, voltage and current sensing inputs to protective relays, station DC supply, and DC control circuitry from the station DC supply through the trip coil(s) of the circuit breakers or other interrupting devices.

General Description of Definition Change

The proposed definition of Protection System modifies the existing definition to

1) More precisely define the applicable communication systems
2) More precisely define the involved voltage and current sensing inputs
3) Expand the existing definition to include the entire station DC supply
4) More expansively and precisely define the applicable DC control circuitry.

General Assessment of Impact of Change

After adoption of the proposed change, the definition remains consistent with the existing uses. The modifications make it more useful and lead to an increased ability to monitor compliance of some of the standards using the definition. The following table illustrates each use of the term, "Protective System" in the existing FERC-approved standards, whether the term is capitalized (indicating that the intent is to use the defined term) or not. The modifications, though, address ambiguities that have been identified within the existing approved definition, and are important for the detailed use of the definition within the draft PRC-005-2 Standard.

Assessment of Impact on Existing Standards – Based on May 20, 2009 Revision of NERC Standards		
Standard Number and Name	**Clause (excluding Measures and compliance elements)**	**Impact**
NUC-001-1 — Nuclear Plant Interface Coordination	R7. Per the Agreements developed in accordance with this standard, the Nuclear Plant Generator Operator shall inform the applicable Transmission Entities of actual or proposed changes to nuclear plant design, configuration, operations, limits, **protection systems**, or capabilities that may impact the ability of the electric system to meet the NPIRs.	The proposed revisions to the definition are consistent with this use, and do not affect the applicability of the definition.
NUC-001-1 — Nuclear Plant Interface Coordination	R8. Per the Agreements developed in accordance with this standard, the applicable Transmission Entities shall inform the Nuclear Plant Generator Operator of actual or proposed changes to electric system design, configuration, operations, limits, **protection systems**, or capabilities that may impact the ability of the electric system to meet the NPIRs.	The proposed revisions to the definition are consistent with this use, and do not affect the applicability of the definition.
PER-005-1 — System Personnel Training	R3.1. Each Reliability Coordinator, Balancing Authority and Transmission Operator that has operational authority or control over Facilities with established IROLs or has established operating guides or **protection systems** to mitigate IROL violations shall provide each System Operator with emergency operations training using simulation technology such as a simulator, virtual technology, or other technology that replicates the operational behavior of the BES during normal and emergency conditions.	The proposed revisions to the definition are consistent with this use, and do not affect the applicability of the definition.
PRC-001-1 — System Protection Coordination	R1. Each Transmission Operator, Balancing Authority, and Generator Operator shall be familiar with the purpose and limitations of **protection system** schemes applied in its area.	The proposed revisions to the definition are consistent with this use, and do not affect the applicability of the definition.
PRC-001-1 —— System Protection Coordination	R4. Each Transmission Operator shall coordinate **protection systems** on major transmission lines and interconnections with neighboring Generator Operators, Transmission Operators, and Balancing Authorities.	The proposed revisions to the definition are consistent with this use, and do not affect the applicability of the definition.

Assessment of Impact on Existing Standards – Based on May 20, 2009 Revision of NERC Standards		
Standard Number and Name	**Clause (excluding Measures and compliance elements)**	**Impact**
PRC-001-1 — System Protection Coordination	R5. A Generator Operator or Transmission Operator shall coordinate changes in generation, transmission, load or operating conditions that could require changes in the **protection systems** of others: R5.1. Each Generator Operator shall notify its Transmission Operator in advance of changes in generation or operating conditions that could require changes in the Transmission Operator's **protection systems**. R5.2. Each Transmission Operator shall notify neighboring Transmission Operators in advance of changes in generation, transmission, load, or operating conditions that could require changes in the other Transmission Operators' **protection systems**.	The proposed revisions to the definition are consistent with this use, and do not affect the applicability of the definition.
PRC-003-1 — Regional Procedure for Analysis of Misoperations of Transmission and Generation Protection Systems	Purpose - To ensure all transmission and generation **Protection System** Misoperations affecting the reliability of the Bulk Electric System (BES) are analyzed and mitigated.	The proposed revisions to the definition are consistent with this use, and do not affect the applicability of the definition.
PRC-003-1 — Regional Procedure for Analysis of Misoperations of Transmission and Generation Protection Systems	R1. Each Regional Reliability Organization shall establish, document and maintain its procedures for, review, analysis, reporting and mitigation of transmission and generation **Protection System** Misoperations. These procedures shall include the following elements: R1.1. The **Protection Systems** to be reviewed and analyzed for Misoperations (due to their potential impact on BES reliability).	The proposed revisions to the definition are consistent with this use, and do not affect the applicability of the definition.

Assessment of Impact on Existing Standards – Based on May 20, 2009 Revision of NERC Standards		
Standard Number and Name	**Clause (excluding Measures and compliance elements)**	**Impact**
PRC-003-1 — Regional Procedure for Analysis of Misoperations of Transmission and Generation Protection Systems	R2. Each Regional Reliability Organization shall maintain and periodically update documentation of its procedures for review, analysis, reporting, and mitigation of transmission and generation **Protection System** Misoperations.	The proposed revisions to the definition are consistent with this use, and do not affect the applicability of the definition.
PRC-003-1 — Regional Procedure for Analysis of Misoperations of Transmission and Generation Protection Systems	R3. Each Regional Reliability Organization shall distribute procedures in Requirement 1 and any changes to those procedures, to the affected Transmission Owners, Distribution Providers that own transmission **Protection Systems**, and Generator Owners within 30 calendar days of approval of those procedures.	The proposed revisions to the definition are consistent with this use, and do not affect the applicability of the definition.
PRC-004-1 — Analysis and Mitigation of Transmission and Generation Protection System Misoperations	Purpose - Ensure all transmission and generation **Protection System** Misoperations affecting the reliability of the Bulk Electric System (BES) are analyzed and mitigated.	The proposed revisions to the definition are consistent with this use, and do not affect the applicability of the definition.
PRC-004-1 — Analysis and Mitigation of Transmission and Generation Protection System Misoperations	R1. The Transmission Owner and any Distribution Provider that owns a transmission **Protection System** shall each analyze its transmission **Protection System** Misoperations and shall develop and implement a Corrective Action Plan to avoid future Misoperations of a similar nature according to the Regional Reliability Organization's procedures developed for Reliability Standard PRC-003 Requirement 1.	The proposed revisions to the definition are consistent with this use, and do not affect the applicability of the definition.

Assessment of Impact on Existing Standards – Based on May 20, 2009 Revision of NERC Standards		
Standard Number and Name	**Clause (excluding Measures and compliance elements)**	**Impact**
PRC-004-1 — Analysis and Mitigation of Transmission and Generation Protection System Misoperations	R2. The Generator Owner shall analyze its generator **Protection System** Misoperations, and shall develop and implement a Corrective Action Plan to avoid future Misoperations of a similar nature according to the Regional Reliability Organization's procedures developed for PRC-003 R1.	The proposed revisions to the definition are consistent with this use, and do not affect the applicability of the definition.
PRC-004-1 — Analysis and Mitigation of Transmission and Generation Protection System Misoperations	R3. The Transmission Owner, any Distribution Provider that owns a transmission **Protection System**, and the Generator Owner shall each provide to its Regional Reliability Organization, documentation of its Misoperations analyses and Corrective Action Plans according to the Regional Reliability Organization's procedures developed for PRC-003 R1.	The proposed revisions to the definition are consistent with this use, and do not affect the applicability of the definition.
WECC Standard PRC-004-WECC-1 — Protection System and Remedial Action Scheme Misoperation	Purpose - Regional Reliability Standard to ensure all transmission and generation **Protection System** and Remedial Action Scheme (RAS) Misoperations on Transmission Paths and RAS defined in section 4 are analyzed and/or mitigated.	The proposed revisions to the definition are consistent with this use, and do not affect the applicability of the definition.
WECC Standard PRC-004-WECC-1 — Protection System and Remedial Action Scheme Misoperation	R1. System Operators and System Protection personnel of the Transmission Owners and Generator Owners shall analyze all **Protection System** and RAS operations. R1.2. System Protection personnel shall analyze all operations of **Protection Systems** and RAS within 20 business days for correctness to characterize whether a Misoperation has occurred that may not have been identified by System Operators.	The proposed revisions to the definition are consistent with this use, and do not affect the applicability of the definition.

Assessment of Impact on Existing Standards – Based on May 20, 2009 Revision of NERC Standards		
Standard Number and Name	**Clause (excluding Measures and compliance elements)**	**Impact**
WECC Standard PRC-004-WECC-1 — Protection System and Remedial Action Scheme Misoperation	R2. Transmission Owners and Generator Owners shall perform the following actions for each Misoperation of the **Protection System** or RAS. It is not intended that Requirements R2.1 through R2.4 apply to **Protection System** and/or RAS actions that appear to be entirely reasonable and correct at the time of occurrence and associated system performance is fully compliant with NERC Reliability Standards. If the Transmission Owner or Generator Owner later finds the **Protection System** or RAS operation to be incorrect through System Protection personnel analysis, the requirements of R2.1 through R2.4 become applicable at the time the Transmission Owner or Generator Owner identifies the Misoperation: R2.1 If the **Protection System** or RAS has a Security-Based Misoperation and two or more Functionally Equivalent **Protection Systems** (FEPS) or Functionally Equivalent RAS (FERAS) remain in service to ensure Bulk Electric System (BES) reliability, the Transmission Owners or Generator Owners shall remove from service the **Protection System** or RAS that misoperated within 22 hours following identification of the Misoperation. Repair or replacement of the failed Protection System or RAS is at the Transmission Owners' and Generator Owners' discretion. R2.2. If the **Protection System** or RAS has a Security-Based Misoperation and only one FEPS or FERAS remains in service to ensure BES reliability, the Transmission Owner or Generator Owner shall perform the following. R2.2.1. Following identification of the **Protection System** or RAS Misoperation, Transmission Owners and Generator Owners shall remove from service within 22 hours for repair or modification the **Protection System** or RAS that misoperated. R2.2.2. The Transmission Owner or Generator Owner shall repair or replace any **Protection System** or RAS that misoperated with a FEPS or FERAS within 20 business days of the date of removal. The Transmission Owner or Generator Owner shall remove the Element from service or disable the RAS if repair or replacement is not completed within 20 business days.	The proposed revisions to the definition are consistent with this use, and do not affect the applicability of the definition.

Assessment of Impact on Existing Standards – Based on May 20, 2009 Revision of NERC Standards		
Standard Number and Name	**Clause (excluding Measures and compliance elements)**	**Impact**
WECC Standard PRC-004-WECC-1 — Protection System and Remedial Action Scheme Misoperation	R2.3. If the **Protection System** or RAS has a Security-Based or Dependability-Based Misoperation and a FEPS and FERAS is not in service to ensure BES reliability, Transmission Owners or Generator Owners shall repair and place back in service within 22 hours the **Protection System** or RAS that misoperated. If this cannot be done, then Transmission Owners and Generator Owners shall perform the following. R2.3.1. When a FEPS is not available, the Transmission Owners shall remove the associated Element from service. R2.4. If the **Protection System** or RAS has a Dependability-Based Misoperation but has one or more FEPS or FERAS that operated correctly, the associated Element or transmission path may remain in service without removing from service the **Protection System** or RAS that failed, provided one of the following is performed. R2.4.1. Transmission Owners or Generator Owners shall repair or replace any **Protection System** or RAS that misoperated with FEPS and FERAS within 20 business days of the date of the Misoperation identification, or R2.4.2. Transmission Owners or Generator Owners shall remove from service the associated Element or RAS.	The proposed revisions to the definition are consistent with this use, and do not affect the applicability of the definition.
WECC Standard PRC-004-WECC-1 — Protection System and Remedial Action Scheme Misoperation	R3. Transmission Owners and Generation Owners shall submit Misoperation incident reports to WECC within 10 business days for the following. R3.1. Identification of a Misoperation of a **Protection System** and/or RAS, R3.2. Completion of repairs or the replacement of **Protection System** and/or RAS that misoperated.	The proposed revisions to the definition are consistent with this use, and do not affect the applicability of the definition.

Assessment of Impact on Existing Standards – Based on May 20, 2009 Revision of NERC Standards		
Standard Number and Name	**Clause (excluding Measures and compliance elements)**	**Impact**
WECC Standard PRC-STD-003-1 — Protective Relay and Remedial Action Scheme Misoperation	Purpose - Regional Reliability Standard to ensure all transmission and generation **Protection System** Misoperations affecting the reliability of the Bulk Electric System (BES) are analyzed and mitigated. PRC-STD-003-1 is a Regional Reliability Standard that meets Requirement 1 of the NERC Standard PRC-003-1.	The proposed revisions to the definition are consistent with this use, and do not affect the applicability of the definition.
TPL-001-0.1 — System Performance Under Normal Conditions (also TPL-002-0, TPL-003-0, and TPL-004-0)	Table 1C - SLG Fault, with Delayed Clearing (stuck breaker or **protection system** failure):	The proposed revisions to the definition are consistent with this use, and do not affect the applicability of the definition.
TPL-001-0.1 — System Performance Under Normal Conditions (also TPL-002-0, TPL-003-0, and TPL-004-0)	Table 1D - 3Ø Fault, with Delayed Clearing (stuck breaker or **protection system** failure):	The proposed revisions to the definition are consistent with this use, and do not affect the applicability of the definition.
TPL-001-0.1 — System Performance Under Normal Conditions (also TPL-002-0, TPL-003-0, and TPL-004-0)	Table 1 – Footnote e. Normal clearing is when the protection system operates as designed and the Fault is cleared in the time normally expected with proper functioning of the installed **protection systems**. Delayed clearing of a Fault is due to failure of any **protection system** component such as a relay, circuit breaker, or current transformer, and not because of an intentional design delay.	The proposed revisions to the definition are consistent with this use, and do not affect the applicability of the definition.

Assessment of Impact on Existing Standards – Based on May 20, 2009 Revision of NERC Standards		
Standard Number and Name	**Clause (excluding Measures and compliance elements)**	**Impact**
TPL-002-0a — System Performance Following Loss of a Single BES Element	R1. The Planning Authority and Transmission Planner shall each demonstrate through a valid assessment that its portion of the interconnected transmission system is planned such that the Network can be operated to supply projected customer demands and projected Firm (nonrecallable reserved) Transmission Services, at all demand levels over the range of forecast system demands, under the contingency conditions as defined in Category B of Table I. To be valid, the Planning Authority and Transmission Planner assessments shall: R1.3. Be supported by a current or past study and/or system simulation testing that addresses each of the following categories,, showing system performance following Category B of Table 1 (single contingencies). The specific elements selected (from each of the following categories) for inclusion in these studies and simulations shall be acceptable to the associated Regional Reliability Organization(s). R1.3.10. Include the effects of existing and planned **protection systems**, including any backup or redundant systems. R1.3.12. Include the planned (including maintenance) outage of any bulk electric equipment (including **protection systems** or their components) at those demand levels for which planned (including maintenance) outages are performed.	The proposed revisions to the definition are consistent with this use, and do not affect the applicability of the definition.

Assessment of Impact on Existing Standards – Based on May 20, 2009 Revision of NERC Standards		
Standard Number and Name	**Clause (excluding Measures and compliance elements)**	**Impact**
TPL-003-0a — System Performance Following Loss Two or More BES Elements	R1. The Planning Authority and Transmission Planner shall each demonstrate through a valid assessment that its portion of the interconnected transmission systems is planned such that the network can be operated to supply projected customer demands and projected Firm (nonrecallable reserved) Transmission Services, at all demand Levels over the range of forecast system demands, under the contingency conditions as defined in Category C of Table I (attached). The controlled interruption of customer Demand, the planned removal of generators, or the Curtailment of firm (non-recallable reserved) power transfers may be necessary to meet this standard. To be valid, the Planning Authority and Transmission Planner assessments shall: R1.3. Be supported by a current or past study and/or system simulation testing that addresses each of the following categories, showing system performance following Category C of Table 1 (multiple contingencies). The specific elements selected (from each of the following categories) for inclusion in these studies and simulations shall be acceptable to the associated Regional Reliability Organization(s). R1.3.10. Include the effects of existing and planned **protection systems**, including any backup or redundant systems. R1.3.12. Include the planned (including maintenance) outage of any bulk electric equipment (including **protection systems** or their components) at those Demand levels for which planned (including maintenance) outages are performed.	The proposed revisions to the definition are consistent with this use, and do not affect the applicability of the definition.

Assessment of Impact on Existing Standards – Based on May 20, 2009 Revision of NERC Standards		
Standard Number and Name	**Clause (excluding Measures and compliance elements)**	**Impact**
TPL-004 — System Performance Following Extreme BES Events	R1. The Planning Authority and Transmission Planner shall each demonstrate through a valid assessment that its portion of the interconnected transmission system is evaluated for the risks and consequences of a number of each of the extreme contingencies that are listed under Category D of Table I. To be valid, the Planning Authority's and Transmission Planner's assessment shall: R1.3. Be supported by a current or past study and/or system simulation testing that addresses each of the following categories, showing system performance following Category D contingencies of Table I. The specific elements selected (from within each of the following categories) for inclusion in these studies and simulations shall be acceptable to the associated Regional Reliability Organization(s). R1.3.7. Include the effects of existing and planned **protection systems**, including any backup or redundant systems. R1.3.9. Include the planned (including maintenance) outage of any bulk electric equipment (including **protection systems** or their components) at those demand levels for which planned (including maintenance) outages are performed.	The proposed revisions to the definition are consistent with this use, and do not affect the applicability of the definition.
TPL-006-0 — Assessment Data from Regional Reliability Organizations	R1. Each Regional Reliability Organization shall provide, as requested (seasonally, annually, or as otherwise specified) by NERC, system data, including past, existing, and future facility and Bulk Electric System data, reports, and system performance information, necessary to assess reliability and compliance with the NERC Reliability Standards and the respective Regional planning criteria. The facility and Bulk Electric System data, reports, and system performance information shall include, but not be limited to, one or more of the following types of information as outlined below: R1.5. Transmission system and supporting information (thermal, voltage, and Stability Limits, contingency analyses, system restoration, system modeling and data requirements, and **protection systems**.)	The proposed revisions to the definition are consistent with this use, and do not affect the applicability of the definition.

Assessment of Impact on Existing Standards – Based on May 20, 2009 Revision of NERC Standards		
Standard Number and Name	**Clause (excluding Measures and compliance elements)**	**Impact**
Glossary of Terms Definition — Delayed Fault Clearing	Fault clearing consistent with correct operation of a breaker failure protection system and its associated breakers, or of a backup **protection system** with an intentional time delay.	The proposed revisions to the definition are consistent with this use, and do not affect the applicability of the definition.
Glossary of Terms Definition — Misoperation	• Any failure of a **Protection System** element to operate within the specified time when a fault or abnormal condition occurs within a zone of protection. • Any operation for a fault not within a zone of protection (other than operation as backup protection for a fault in an adjacent zone that is not cleared within a specified time for the protection for that zone). • Any unintentional **Protection System** operation when no fault or other abnormal condition has occurred unrelated to on-site maintenance and testing activity.	The proposed revisions to the definition are consistent with this use, and do not affect the applicability of the definition.
Glossary of Terms Definition — Normal Clearing	A **protection system** operates as designed and the fault is cleared in the time normally expected with proper functioning of the installed **protection systems**.	The proposed revisions to the definition are consistent with this use, and do not affect the applicability of the definition.
Glossary of Terms Definition — Planning Authority	The responsible entity that coordinates and integrates transmission facility and service plans, resource plans, and **protection systems**.	The proposed revisions to the definition are consistent with this use, and do not affect the applicability of the definition.

NERC
NORTH AMERICAN ELECTRIC RELIABILITY CORPORATION

Standards Announcement

Comment Period Open
July 24–September 8, 2009

Now available at:
http://www.nerc.com/filez/standards/Protection_System_Maintenance_Project_2007-17.html

Project Name:
Project 2007-17: Transmission and Generation Protection System Maintenance and Testing

Due Date and Submittal Information:
The comment period is open **until 8 p.m. EDT on September 8, 2009**. Please use this electronic form to submit comments. If you experience any difficulties in using the electronic form, please contact Lauren Koller at Lauren.Koller@nerc.net. An off-line, unofficial copy of the comment form is posted on the project page:
http://www.nerc.com/filez/standards/Protection_System_Maintenance_Project_2007-17.html

Content for Comment Period:
The Transmission and Generation Protection System Maintenance and Testing Standard Drafting Team is seeking comments on its first draft of proposed standard PRC-005-2 — Protection System Maintenance.

Other Documents Posted:

- Implementation plan
- Table showing how the team addressed issues and input from FERC and stakeholders
- Frequently asked questions
- Supplemental reference
- Evaluation of the impact of changing the definition of Protection System

Project Background:
The draft standard combines the following previous standards:

- PRC-005-1 — Transmission and Generation Protection System Maintenance and Testing
- PRC-008-0 — Underfrequency Load Shedding Equipment Maintenance Program
- PRC-011-0 — UVLS System Maintenance and Testing
- PRC-017-0 — Special Protection System Maintenance and Testing.

The proposed standard addresses FERC directives from FERC Order 693 as well as issues identified by stakeholders. In accordance with the FERC directives, this draft standard

establishes requirements for a time-based maintenance program, where all relevant devices are maintained according to prescribed maximum intervals. It further establishes requirements for a condition-based maintenance program, where the hands-on maintenance intervals are adjusted to reflect the known and reported condition of the relevant devices, and for a performance-based maintenance program, where the hands-on maintenance intervals are adjusted to reflect the historical performance of the relevant devices.

Applicability of Standards in Project:

Transmission Owners
Generator Owners
Distribution Providers

Standards Development Process

The Reliability Standards Development Procedure contains all the procedures governing the standards development process. The success of the NERC standards development process depends on stakeholder participation. We extend our thanks to all those who participate.

For more information or assistance,
please contact Shaun Streeter at shaun.streeter@nerc.net or at 609.452.8060.

Individual or group. (55 Responses)
Name (36 Responses)
Organization (36 Responses)
Group Name (19 Responses)
Lead Contact (19 Responses)
Question 1 (52 Responses)
Question 1 Comments (55 Responses)
Question 2 (54 Responses)
Question 2 Comments (55 Responses)
Question 3 (52 Responses)
Question 3 Comments (55 Responses)
Question 4 (47 Responses)
Question 4 Comments (55 Responses)
Question 5 (45 Responses)
Question 5 Comments (55 Responses)
Question 6 (49 Responses)
Question 6 Comments (55 Responses)
Question 7 (48 Responses)
Question 7 Comments (55 Responses)
Question 8 (0 Responses)
Question 8 Comments or Conflict (55 Responses)
Question 9 (10 Responses)
Question 9 Comments (55 Responses)
Question 10 (0 Responses)
Question 10 Comments (55 Responses)

Individual
James Starling
SCE&G
Yes
The SDT is to be commended for developing a clear and well documented draft. Overall it provides a balanced view of Protection System Maintenance, and good justification for its maximum intervals.
No
Table 1a – Level 1 Monitoring has a requirement to “Verify the continuity of the breaker trip circuit including trip coil” at least every 3 months. This is interpreted to be applicable to both the low-side generator output breaker and the high-side breaker for the GSU. The generator output breaker has 3 separate trip coils (one for each pole) that are connected in a parallel configuration and there is no means available to verify continuity of each of these coils INDIVIDUALLY in this arrangement. Is the intent of this requirement to have each trip signal parallel leg verified every three months even though the trip contacts are normally open (these circuits are functionally checked during LOR Functional Verification)? Also, is the Red Indication Light (RIL), which includes the trip coil in the power circuit, adequate for verification (note that the breaker does not include the parallel legs that contain the tripping sensor contacts)? Also, more clarification is needed on the section “Verify proper functioning of the current and voltage circuit inputs from the voltage and current sensing devices to the protective relays” under “Voltage and Current Sensing Devices Inputs to Protective Relays.” How would this be done if no redundancy is available for cross-checking voltage and current sources? In certain situations, “verify proper functioning” is not clear enough. Documentation of verification consistent with the entities procedures should be adequate to indicate compliance.
No
Several maximum maintenance intervals are 3 months. Since this is an absolute maximum period, entities would need to schedule on a 2 month basis to assure the 3 month maximum is

met, i.e., 6 times per year. We recommend that 3 month periods be increased to 4 months which allows scheduling every 3 months. Other methods of achieving the same result is to state periodic requirements of quarterly or 4 times per year.

No

Several maximum maintenance intervals are 3 months. Since this is an absolute maximum period, entities would need to schedule on a 2 month basis to assure the 3 month maximum is met, i.e., 6 times per year. We recommend that 3 month periods be increased to 4 months which allows scheduling every 3 months. An alternate method of achieving the same result is to state periodic requirements of quarterly or 4 times per year.

Yes

No

The FAQ should be expanded to address the issues raised above with verification of trip circuits as to what is an acceptable method meeting the intent of the standard We also suggest changing “prove” to “verify” on FAQ 3a to be consistent with the wording of the requirement. Also, for a single bus with one set of bus potential transformers, how does one verify proper functioning of the potentials? Is a reasonableness criterion adequate?

Individual

Rick Koch

Nebraska Public Power District

Yes

No

Table 1a, for Protective Relays identifies the following Maintenance Activities: Test and calibrate the relays (other than microprocessor relays) with simulated electrical inputs. Verify proper functioning of the relay trip outputs. What is the difference between these two requirements? They appear to be practically equivalent. Tables 1a & 1b, for Station DC supply identify the following Maintenance Activity: Measure that specific gravity and temperature of each cell is within tolerance (where applicable). What is the advantage of testing the SG in every cell compared to using a pilot cell as representative sample of the entire bank? NPPD has not experienced any problems using a pilot cell compared to testing every individual cell. Typically, if the SG is low the cell voltage will be low, which is detected by the voltage test. This seems to be an excessive requirement and does increase personnel exposure to hazardous fluid. What unique information is provided by this test that other tests do not provide?

No

Table 1a, for Station DC supply (that has as a component Valve Regulated Lead-Acid batteries) establishes a Maximum Maintenance Interval of 3 Calendar Years for the following Maintenance Activity: Verify that the station battery can perform as designed by conducting a performance or service capacity test of the entire battery bank. What is the basis for this interval? NPPD’s experience indicates that a 5 Year interval is adequate, especially during the early service life of the battery bank, with increasing frequency as the bank ages.

Yes

Yes

No

Yes

On page 17, the answers to questions 2B and 2C indicate that there is no allowance or provision to exceed the Maximum Maintenance Interval under any circumstances, except that natural disasters or other events of force majeure will receive special consideration when determining sanctions. The rigidity of this performance requirement could conceivably require equipment to be tested even though it is out of service in order to remain compliant, adding unnecessary cost and waste to the PSMP of the regulated entities. We believe that a prescriptive process for deferring testing and maintenance beyond the stated interval would be beneficial to allow the necessary flexibility to manage the PSMP effectively.

None

None

Definition of Terms: Footnote 2 for R4 defines a "maintenance correctable issue". This should be

added to the Definition of Terms section. Sections 4.2.5.4 and 4.2.5.5 inappropriately extends Generator Protection Systems to Station Service Transformers. These are components necessary for plant operation however they are not part of the generator protection scheme. This conclusion is supported by the explanations on page 16 of the FAQ. The FAQ states the operation of the listed station auxiliary transforms protective relays would result in the trip of the generating unit and, as such, would be included in the program. The FAQ goes on to state that relays which trip breakers serving station auxiliary loads such as pumps, fans, or fuel handling equipment, etc., need not be included in the program even if the loss of those loades could result in a trip of the generating unit. The FAQ appears to be inconsistent. Station auxiliary transformers are included because they would result in the trip of the generating unit while other loads such as pumps, fans, etc., are excluded even if their trip could result in a trip of the generating unit. In my opinion, the station service transformers like pumps, fans, etc. are components necessary for plant operation but not necessary for generator protection and should therefore be excluded from PRC-005-2 by removing Sections 4.2.5.4 and 4.2.5.5 from the Standard and modifying the FAQ accordingly. R1 (1.1) First sentence: "For each component used in each Protection System,..." is ambiguous. The sentence should be revised to say..."For each Protection System component, include all maintenance activities specified in Tables 1a, 1b, and 1c." This limits the components to only those identified by the definition of a Protection System. R2 End of sentence: "possess the necessary monitoring attributes." is ambiguous. The sentence should be revised to say..."possess the monitoring attributes identified in Tables 1b or 1c." This specifically defines which attributes are necessary. R4 I am concerned with including the phrase "including identification of the resolution of all maintenance correctible issues". Providing evidence of implementation of the PSMP will require the collection and submittal of all work documents that restored a device to functional order by calibration, repair, or replacement. It is reasonable to assume that appropriate corrective actions were taken for each specific situation. Identification of the resolution will add a significant documentation burden without adding to the reliability of the BES. Implementation of the PSMP may be evidenced without including identification of the resolution of all maintenance correctible issues. It is interesting to note that nowhere in PRC-005-2 does it state that you have to take corrective actions to return a component to normal operating conditions. "No action taken" can be the resolution taken by the utility of a maintenance correctible issue.

Individual

Kasia Mihalchuk

Manitoba Hydro

Yes

No

What documentation or evidence is required to prove that the Protection System Control Circuitry has been maintained every three months, if just a visual inspection of the breaker control trip circuit RED panel light has been completed, to verify continuity of breaker trip coil? How do we handle breakers with dual trip coils and only one RED light for trip coil continuity? What do the terms DISTRIBUTED and CENTRALIZED with respect to UFLS mean? In Table 1C under the heading "Maximum Maintenance Interval" some of the entries are stated as being "Continuous". In the case of other maintenance activities the descriptor for Maintenance Interval indentifies the maximum period of time that may elapse before action must be taken. "Continuous" implies continuous action; however, in reality continuous monitoring enables no maintenance action to be taken until such time as trends indicate the need to do so. Therefore we recommend that where the maintenance interval is stated as "Continuous" it should be changed to read "Never" or "Not Applicable". The Table 1A requirement of 3 months for Protection System Control Circuitry (Breaker Trip Coil Only) (except for UFLS or UVLS) should be omitted as it is not realistic. Recommend following the Table 1B requirement of 6 years (Trip testing) for this. Does 27 undervoltage monitoring of this circuit qualify as self monitoring?

No

When we have redundant digital relay system that would fall under Level 1c category with a 12 year mtce cycle, but the Protection System Control Circuitry is non-monitored so it falls under Level 1a, with a 6 year mtce cycle. We will have to complete relay mtce and trip testing every 12 years and trip testing only every 6 years, therefore we must complete trip testing twice as often as we are doing the maintenance. We feel that relay maintenance and trip testing should be completed at the same frequency. The Protection System Control Circuitry (Breaker Trip Coil) checks every three months is too excessive. These circuits are checked during trip testing of the Protection scheme, at the 6 or 12 year interval. If we have a redundant digital relay system, using a IEC61850 communication from the relay to a common breaker aux trip relay, what level does this system fall under?

Yes

Yes

No
Yes
Individual
Kristina Loudermilk
ENOSERV
Yes
No
Table 1A, protective replays for 6 calendar years, Testing and calibrating the relays other than microprocessors relays with simulated electrical inputs... does that mean that micro processor relays do not need to be checked? Verify proper function of the relay trip outputs... Does this involve both electro AND micro processors? Then when mentioning the verifying microprocessor relays, does that include the trip output.
Yes
Yes
Yes
No
No
On Table 1A, the maximum time lengths are too long, especially for electro relays. A prime example is when testing a KD relay on a yearly basis and most of the time needs to be adjusted because of how far off it comes out. Allowing entities to take their time up to six calendar years may be too long.
Individual
Wade Davis
Otter Tail Power
Yes
No
Station DC supply - (Maintenance Activity) As a company we do not think that measuring specific gravity and temperature of each cell is necessary. Their is a better test that we use with the Bite Impedance Test. We have had good success with the impedance test for determining the batteries condition. See article (Impedance Testing Is The Coming Thing For Substation Battery Maintenance)written in Transmission & Distribution 11/1991 by Ritchard Kelleher, Test & Maintenance Specialist, Northeast Utilities.
Yes
Yes
Individual
Alison Mackellar

Exelon Generation Company, LLC - Exelon Nuclear

Yes

None

No

1. Minimum maintenance activities should be on a yearly multiplier verses a monthly multiplier. Nuclear generating stations are typically on an 18-month or 24-month refueling cycle. The draft standard does not take into consideration a nuclear generators refueling cycle. Specifically, most Boiling Water Reactors (BWRs) are on a 24-month refueling cycle and may run continuously between refueling outages. Performing maintenance on-line puts the generating unit at risk without any commensurate increase in reliability to the bulk electric system. 2. All maintenance activities should include a "grace" period to allow for changes to a nuclear generator's refueling schedule and emergent conditions that would prevent the safe isolation of equipment and/or testing of function. "Grace" periods align with currently implemented nuclear generator's maintenance and testing programs. 3. Activities that begin with "verify" should be modified to "Validate_____are/is within acceptable limits. Initiate corrective actions as required." For example, some level of DC grounds are acceptable based on circuit design and component installation. Troubleshooting or ground isolation may increase the risk to the system depending on ground magnitude and conditions. 4. Please provide clarification on "verify that no dc supply grounds are present" most stations have some level of ground current. Should this be interpreted to be a measure of resistance or current values? Suggest rewording to say "Check and record unintentional battery grounds" 5. "Verify Station Battery Chargers provides the correct float and equalize voltage" should be deleted. Equalizing a battery is a maintenance function and should only be performed as needed. Suggest rewording to say "Check and record charger output current and voltage." 6. Activities associated with Battery Charger performance should be deleted. The ability of the Battery Charger to maintain the battery at full charge state is verified by checking proper "float voltage." The ability to provide full rated current only affects the ability to recharge a battery AFTER an event has occurred. 7. In Table 1a does the requirement to "verify proper electrolyte level" refer to all batteries or only a sampling? Current practice is to use the "pilot cell" as the monitoring cell as this cell is usually the least healthy of the battery bank from a specific gravity and/or voltage standpoint. If the pilot cell continues to degrade then the other batteries will be monitored more often. Suggest rewording to "Check electrolyte level." 8. In Table 1a the 18-month requirement to measure that the specific gravity and temperature of each cell is within tolerance is "where applicable" – what does "where applicable" mean? 9. For the Station dc supply (battery is not used) 18-month interval – should this be interpreted that it is just the battery charger with no attached battery? Or a dc supply system that does not contain a battery? 10. Table 1a Station dc supply 18-month interval to verify cell-to-cell and terminal connection resistance is within "tolerance" should be revised to say "tolerance or acceptable limits." 11. Table 1a Station dc supply (that has as a component valve regulated lead-acid batteries) should provide an additional optional activity for "Total replacement of battery at an interval of four (4) years" in lieu of not conducting performance or service capacity test at maximum maintenance interval.

No

1. All maintenance activities should include a "grace" period to allow for changes to a nuclear generator's refueling schedule and emergent conditions that would prevent the safe isolation of equipment and/or testing of function. "Grace" periods align with currently implemented nuclear generator's maintenance and testing programs. 2. Table 1a – page 6 regarding the 3 Month "Protection System Control Circuitry (Breaker Trip Coil Only) (except for UFLS or UVLS)" states that the maintenance activity shall verify the continuity of the breaker trip circuit including the trip coil. There is unclear guidance on how this activity is to be performed, particular on generator output breakers. Does this activity imply actual trip testing of the breaker itself? If so, performing this type of activity with the generator on-line puts the unit at risk without any commensurate increase in reliability to the bulk electric system. If this is the case it is requested that this particular test is extended from 3 months to 24 months to align with nuclear generating units refueling cycle. If not, and this activity is simply verification of continuity by means of light indication, then please clarify in Table 1a.

No

1. Please provide more clarification on what constitutes "partially monitoring." For example, is a computer auxiliary contact alarm count as partial monitoring? Would a common alarm between relays meet the definition of partial monitoring? 2. All maintenance activities should include a "grace" period to allow for changes to a nuclear generator's refueling schedule and emergent conditions that would prevent the safe isolation of equipment and/or testing of function. "Grace" periods align with currently implemented nuclear generator's maintenance and testing programs. 3. Table 1b Station dc supply (that has as a component valve regulated lead-acid batteries) should provide an additional optional activity for "Total replacement of battery at an interval of four (4) years. 4. There seems to be a disconnect between the monitoring attribute and maintenance activity. For example, the monitoring attribute "Monitoring and alarming of the station dc supply voltage/detection and alarming of dc grounds" has the maintenance activity

"verify that the station battery can perform as designed by conducting a performance or service capacity test of the entire batter bank. (3 calendar years) – or – Verify that the station battery can perform as designed by evaluating the measure cell/unit internal ohmic values to station battery baseline (3 months)." The maintenance activity does not support the monitoring attribute. 5. If an entity has implemented Table 1b and/ or Table 1c, is there an acceptable length of time that the monitoring equipment can be out of service without falling back to Table 1a requirements?

Yes

None

No

None

No

None

Conflict 1. Nuclear generators are licensed to operate and regulated by the Nuclear Regulatory Commission (NRC). Each licensee operates in accordance with plant specific Technical Specifications (TSs) issued by the NRC. TS allow for a 25% grace period may be applied to TS Surveillance Requirements (SRs). Referencing NRC issued NUREGs for Standard Issued Technical Specifications (NUREG-143 through NUREG-1434) Section 3.0, "Surveillance Requirement (SR) Applicability, SR 3.02 states the following: " The specified Frequency for each SR is met if the Surveillance is performed within 1.25 times the interval specified in the Frequency, as measured from the previous performance or as measured from the time a specified condition of the Frequency is met." 2. Battery Charger Testing 3. All conditions (grounds, voltages etc) should be compared to "acceptable limits" as specified in nuclear station design basis documents, industry standards or vendor data. 4. IEEE 450 does not use the word "proper" as utilized in Table 1a (e.g., "record voltage of each cell v/s verify proper voltage of each individual cell….") 5. The NRC Maintenance Rule (10 CFR 50.65) requires monitoring the effectiveness of maintenance to ensure reliable operation of equipment within the scope of the Rule. Adjustments are made to the PM (preventative maintenance) program based on equipment performance. The Maintenance Rule program should provide an acceptable level of reliability and availability for equipment within its scope. Comments: 1. All maintenance activities should include a "grace" period to allow for changes to a nuclear generator's refueling schedule and emergent conditions that would prevent the safe isolation of equipment and/or testing of function. "Grace" periods align with currently implemented nuclear generator's maintenance and testing programs. 2. The 3-month maximum interval should be extended to include a grace period to ensure that a 25% grace period is included to align with current nuclear templates that implement NRC TS SRs are documented in the response to Question 8.

Business Practice

Business Practice: Nuclear Electric Insurance Limited (NEIL) variance allowance.

1. Battery testing should be added to Table 1c for Station dc supply (that uses a battery and charger) 2. Table 1c – Condition based maintenance. Consider adding Battery Capacity Test on a 6-year interval regardless of other condition based maintenance performed. 3. Evaluating the measured cell/unit internal ohmic values to station battery baseline does not provide an evaluation of battery capacity – please explain rational for maintenance activity. 4. If the Table 1a maintenance interval is reached and the entity is unable to perform the maintenance task, is it acceptable to install temporary external monitoring or other measures to defer the maintenance to Table 1b or Table 1c interval? Is it acceptable in Table 1b to substitute additional or augmented maintenance activities or operator rounds to extend intervals? 5. Table 1c for equipment with "continuous monitoring" states the maximum maintenance interval of "continuous" – this does not seem correct wording – consider revising to state "not required." 6. The NERC Standard should be revised to include a specific allowance for a deferral or variances of a maintenance activity based on a formal technical evaluation. Nuclear generating units allow for deferrals and/or variances on certain equipment based on emergent conditions that would prevent safe isolation and/or testing of function. It should be noted that any deferrals and/or variances if justified are to be based on a formal evaluation and not based on work management or resource issues. 7. The maintenance intervals and maintenance activities should be referenced directly to a basis document to ensure guidelines have a specific technical basis (e.g., IEEE-450).

Group

SERC Protection and Controls Sub-committee (PCS)

Joe Spencer - SERC staff

Yes

We commend the SDT for developing such a clear and well documented first draft. It generally provides a well reasoned and balanced view of Protection System Maintenance, and good justification for its maximum intervals.

Yes

We agree with the majority of the activities. Below is an example where clarification is needed. “Verify proper functioning of the current and voltage circuit inputs from the voltage and current sensing devices to the protective relays” under “Voltage and Current Sensing Devices Inputs to Protective Relays.” How would this be done if no redundancy is available for cross-checking voltage and current sources? In certain situations, “verify proper functioning” is not clear enough. Documentation of verification consistent with the entities procedures should be adequate to indicate compliance.
No
Recommend that all Level 1 three-month maintenance intervals be changed from 3 months to quarterly. Given a 3 month maximum interval an entity would need to schedule these tasks every 2 months. This would result in six inspections per year. In the experience of many of our utilities, four inspections per year have proven to be successful.
No
Recommend that all Level 2 three-month maintenance intervals be changed from 3 months to quarterly. Given a 3 month maximum interval an entity would need to schedule these tasks every 2 months. This would result in six inspections per year. In the experience of many of our utilities, four inspections per year have proven to be successful.
Yes
No
Yes
Change “prove” to “verify” on FAQ 3a (under Voltage and Current Sensing Devise Inputs to Protective Relays) to be consistent with the wording of the requirement.
None known.
Regional Variance
It is our understanding that once Project 2009-17: “Interpretation of PRC-004-1 and PRC-005-1 for Y-W Electric and Tri-State” is approved, that the definition of a “Transmission Protection System” would be included within PRC-005-2 or included within the NERC Glossary of Terms. However, the specific protection that would be considered part of the “Transmission Protection System” would also depend on the regional definition of the BES. We suggest that the regions develop a supplement that provides further clarification on what constitutes a “Transmission Protection System” given the regional definition of the BES.
The “zero tolerance” structure proposed combined with the large volume and complexity of Protection System components forces an entity to shorten their intervals well below maximum. We instead propose a calendar increment carryover period in which a small percentage of carryover components would be tracked and addressed. For example, up to 1% of an entity’s communication channel 6 year verifications could carryover into the next year. These carryover components would be addressed with high priority in that next calendar increment. There are many barriers to 100% completion or zero tolerance. Some utilities have over ten thousand components.
Group
NextEra Energy Resources
Benjamin Church
Yes
No
a. Tables 1a, 1b & 1c should offer as an alternative, measuring battery float voltages and float currents in lieu of measuring specific gravities as described in Annex A4 of IEEE Std 450-2002. b. Inspection of CVT gaps, MOVs and gas tubes should be added to the communications equipment time based maintenance tables. Failure of the CVT protective devices may cause failure of the Protection System. c. Maintenance Activities for UVLS or UFLS station dc supplies shows “Verify proper voltage of dc supply”. Does this imply that, except for voltage readings of the dc supply, distribution battery banks are not maintained? d. Why does the Maintenance Activities for UVLS or UFLS relays state that verification does not require actual tripping of circuit breakers? e. Please clarify the Maintenance Activities for Voltage and Current Sensing Devices. Must voltage, current and their respective phase angles be measured at each discrete electromechanical relay? f. NextEra Energy concurs with other entities comments concerning this question: This entity believes the approach taken by the SDT is overly prescriptive and too complex to be practically implemented. The inflexible “minimum maintenance activities” approach fails to recognize the harmful effects of over-maintenance and precludes the ability of entities to tailor their maintenance program based on their configurations and operating experience. In particular, the loss of maintenance flexibility embodied in this approach would have perverse consequences for entities with redundant systems. Entities with redundant systems have less need for maintenance of individual components (due to redundancy) yet have twice the maintenance requirements

under the “minimum maintenance activities” approach. For example, Table 1A calls for performing a specific gravity test on “each cell’ of lead acid batteries. Our company believes such a requirement is dubious for entities that do not have redundant batteries, and absurd for entities that do. We have installed redundant batteries in most locations and has had an excellent operating history with batteries by using a combination of internal resistance testing and specific gravity testing of a single “pilot cell”. This practice, combined with DC system alarming capability, has worked well. We are opposed to approving a standard that imposes unnecessary burden and reliability risk by imposing an overly prescriptive approach that in many cases would “fix” non-existent problems. To clarify this last point, we are not asserting that maintenance problems do not exist. However, requiring all entities to modify their practices to conform to the inflexible approach embodied in this proposal, regardless of how existing practices are working, is not an appropriate solution. Among other things, requiring entities to modify practices that are working well to conform to the rigid requirements proposed herein carries the downside risk that the revised practices, made solely to comply with the rigid requirements, degrade reliability performance. Arguably, an entity could possibly return to its existing practices, if those practices are working well, by navigating through the complex set of options and supporting documentation that the SDT has crafted in this proposal. However, like many entities, we have an army of substation technicians with various ranges of experience to perform maintenance on protective systems and other substation components. It is unrealistic to expect most entities making a good faith effort to comply with this proposal to have a full understanding throughout the entire organization of all the nuances crafted into this complex proposal. For the reasons outlined above, we do not agree with the proposal to specify minimum maintenance activities. However, if the majority of industry commenters agree with the SDT’s proposal, we have concerns about some of the proposed minimum tasks. For Protection System control circuitry (trip circuits), Table 1A calls for performing a complete functional trip test. The “Frequently-asked Questions” document states that this “may be an overall test that verifies the operation of the entire trip scheme at once, or it may be several tests of the various portions that make up the entire trip scheme”. Such a requirement creates its own set of reliability risks, especially when monitoring already mitigates risks. We are concerned with this standard promoting an overall functional trip test for transmission Protection Systems. This type of testing can negatively impact reliability with the outages that are required and by exposing the electric system to incorrect tripping. Our company views overall functional trip testing as a commissioning task, not a preventive maintenance task. We perform such testing on new stations and whenever expansion or modification of existing stations dictates such testing.

No

a. (i) Protective relays, (ii) Protection Control Circuitry (Trip Circuits) and (iii) Protection System Communications Equipment and Channels should be changed from 6 calendar years to 8 calendar years. Based on FPL Group’s experience and Reliability Centered Maintenance (RCM) program, FPL Group has established an 8 year program and has found that an aggressive 6 year program would not substantially increase the effectiveness of a preventative maintenance program. b. Battery visuals should be changed from 3 months to 6 months. Electrolyte levels of today’s lead-calcium batteries are relatively stable for a 6 month period compared to lead-antimony batteries used in the past. c. The maximum maintenance interval for communications equipment should be changed from 3 months to 12 months. Based on FPL Group’s experience and RCM program, FPL Group has established a 12 month program that is effective. d. Additionally, NextEra Energy concurs with other entities comments concerning this question: Imposing inflexible maximum interval requirements has the same basic problems as imposing inflexible minimum task requirements. The inflexible “maximum interval” approach fails to recognize the harmful effects of over-maintenance and precludes the ability of entities to tailor their maintenance program based on their configurations and operating experience. The maximum interval approach also has same perverse consequences for entities with redundant systems as the minimum interval approach. Furthermore, the rigid maximum interval approach embodied herein does not sufficiently take into consideration common natural disaster situations. Several of the preventive maintenance tasks proposed in this standard have a maximum interval of 3 months, which is problematic under normal circumstances and unworkable when routine maintenance activities have a much lower priority than emergency repair and restoration. An interval as short as this does not provide a sufficient maintenance scheduling horizon to complete the tasks. The SDT could attempt to address this shortfall by modifying the draft to account for natural disaster situations. For example, the FERC-approved NERC reliability standard FAC-003 for Vegetation Management does include such allowances for natural disasters, such as tornados and hurricanes. However, even if that specific problem is addressed, the fundamental problems created by an overly prescriptive maximum interval approach remains.

Yes

Yes

No

Yes

a. NextEra Energy believes the need for an extensive “Supplementary Reference Document”, in addition to 13 pages of tables and an attachment in the standard itself, illustrates that the proposal is too prescriptive and complex for most entities to practically implement. NextEra Energy would prefer the SDT leave the existing requirements substantially intact or, if most industry commenters prefer the SDT’s approach, that the SDT attempt to simplify it. 7. The Standard Drafting Team has provided a “Frequently-asked Questions” document to address anticipated questions relative to the standard. Do you have any comments on the FAQ? Please explain in the comment area. 1 Yes 0 No Comments: a. An alternative to measuring battery specific gravity is to measure float voltage and float current as described in Annex A4 of IEEE Std 450-2002. b. FAQ Page 17 (#1B): It is outside the jurisdiction of the standards development team to determine acceptable forms of evidence. This should be decided by the Regional Entities. c. FAQ Page 15 (#1A): This question should not have been included since it is addressing the definition of BES, which is currently being addressed by another NERC Group. d. FAQ Page 15 (#2): Although the FAQ is not enforceable, the answer provided may be interpreted as enforceable. This should be included in the standard and not in the FAQ.

a. The level of effort that will be required to be in compliance in accordance to PRC-005-2 is substantial. Also, it will be difficult to create one maintenance program for all NextEra Energy sites that establishes maintenance intervals based the implementation of a combination of the three allowable types of maintenance programs (time-based, condition based, and/or performance based maintenance). As a result, a high risk exists that something will be missed or carried out incorrectly. b. What is the implementation period? How will the standard be implemented in relation to the entity’s maintenance scheduled in accordance with existing intervals specified in the current Protection System Maintenance and Testing Procedure that meets the requirements of PRC-005-1 but will exceed PRC-005-2’s established maximum intervals? Once PRC-005-2 becomes mandatory, entities should not be required to re-do testing in accordance with the new intervals. Instead, entities should be allowed to implement the newly established intervals after the last known cycle. c. Protection System Maintenance Program (PSMP): (c1) The PSMP definition would be better defined if the first sentence was changed to “An ongoing program by which Protection System components are kept in working order and where malfunctioning components are restored to working order.” (c2) Please clarify what is meant by “relevant” under the definition of Upkeep. Should “relevant” be changed to “necessary”? (c3) The definition of Restoration would also be more explicit if changed to “The actions to return malfunctioning components back to working order by calibration, repair or replacement. (c4) Please clarify the definition of Restoration. For example, if a direct transfer trip system has dual channels for extra security even though only one channel is required to protect the reliability of the BES and one channel fails, must both be restored to be compliant? d. Protection System (modification): (d1) ”Voltage and current sensing inputs to protective relays” should be changed to “voltage and current sensors for protective relays.” Voltage and current sensors are components that produce voltage and current inputs to protective relays. (d2) “Auxiliary relays” should be changed to “auxiliary tripping relays” throughout PRC-005-2, FAQ and the Draft Supplementary Reference. (d3) The word “proper” should be removed from the standard. It is ambiguous and should be replaced with a word or words that are clear and concise. e. Additionaly, NextEra Energy concurs with the following comments made by other entities: (e1) PRC-005 Sect B (R2): More clarity needs to be provided. Does this requirement require the utility to document the capabilities of its various protection components to determine fully and partially monitored protection systems? If so the requirement for such documentation should be clearly spelled out. Usually each requirement has a measurement (of compliance) and I'm not clear how this will be done. (e2) PRC-005 Sect B (R4.1): A “grace period” similar to the NPCC Criteria should be considered in case it is not possible to obtain necessary outages.

Individual

Scott Berry

Indiana Municipal Power Agency

Yes

No

IMPA does not agree with the battery charger testing requirements. Per the battery charger manual, the manufacturer sets the current limit at the factory, and it only needs to be adjusted if a lower current limit is desired. The manufacturer gives directions on how to lower the current limiter, and the directions seem to be for this purpose only (not for the sole purpose of performing a current limiter test). The manufacturer also does not give directions on how to perform a full load current test and does not give any recommendation to the user that such test is needed. IMPA believes that both of these maintenance items are not needed to maintain the

battery charger and that only the manufacturer's recommendations on maintenance and testing need to be followed.
Group
Green Country Energy LLC
Rick Shackleford
Yes
No
1) Protection System Control Circuitry (Trip Circuits) (except for UFLS or UVLS) also The maintenance activity causes excessive breaker operation, and the intrusive nature increases the risk of subsequent misoperations on operating units. System configuration of many plants will require an extensive interruption of total plant production to complete the test. 2)Protection System Control Circuitry (Trip Circuits) (UFLS or UVLS systems only) The maintenance activity causes excessive breaker operation, and the intrusive nature increases the risk of subsequent misoperations on operating units. System configuration of many plants will require an extensive interruption of total plant production to complete the test.
No
1) Protection System Control Circuitry (Trip Circuits) (except for UFLS or UVLS) also The maintenance activity causes excessive breaker operation, and the intrusive nature increases the risk of subsequent misoperations on operating units. System configuration of many plants will require an extensive interruption of total plant production to complete the test. 2)Protection System Control Circuitry (Trip Circuits) (UFLS or UVLS systems only) The maintenance activity causes excessive breaker operation, and the intrusive nature increases the risk of subsequent misoperations on operating units. System configuration of many plants will require an extensive interruption of total plant production to complete the test.
No Preference at this time.
N/A does not apply
Yes
Huge help to us!
No
It would be beneficial to include some administrative (man hour) and cost estimates to comply with this and any future proposed standards so if major budget impacts could be addressed.
Business Practice
Contractual commitments existing prior to NERC stds make it difficult to comply with some of the maintenance activities.
None
Group
Northeast Power Coordinating Council
Guy Zito
Yes
No
We agree there is a need for minimum maintenance activities; however, the standard does not clearly define the differences between Table 1a, 1b, and 1c. It is recommended that the drafting team develop definitions for the equipment listed in these tables. For example, Table 1a equipment consists of mechanical and solid state equipment without monitoring capability, Table 1b consists of mechanical and solid state equipment with monitoring capability, and Table 1c consists of equipment capable of self monitoring. In addition, all battery, charger and power supply maintenance activities should be removed from Table 1a, 1b, and 1c, and summarized in a separate Table (i.e. Table 2). Tables 1a and 1b for 'Station dc supply (that has as a component any type of battery) and Table 1c for 'Station dc Supply (any battery technology) for an 18 Month 'Maximum Maintenance Interval' identifies the need to 'Measure that the specific gravity and temperature of each cell is within tolerance (where applicable).' Following industry best

practices, we would recommend using the MBRITE diagnostic test. MBRITE testing provides more information than a specific gravity test while reducing the risk of injury to testing personnel. In Table 1a, the Type of Component “Protection system communications equipment and channels.” has a 3 month “Maximum Maintenance Interval”. Clarification needs to be provided as to how an unmonitored (do not have self-monitoring alarms) will be tested. Table 1a refers to “Unmonitored Protection Systems”. The “6 Calendar Years” “Maximum Maintenance Interval” “Maintenance Activities” is excessive.

No

We question whether any maintenance activity should be as long as 12 years. Considering the rate of change in personnel and technology, the working group should reduce the time period by redefining the requirement if necessary, or eliminate the standard requirement. In addition, the DC components have too many tests at confusing intervals. Confusion will make it difficult to implement or follow the exact method used.

Yes

No

The concept is acceptable, but the requirements to follow in Appendix A seem to be a deterrent from attempting to use this process. Is the term “common factors” meant to take into account variables at locations that can affect the components’ performance (lightning, water damage, humidity, heat, cold)?

No

Yes

The FAQ is helpful in answering many of the obvious questions.

Yes--NPCC Directory #3, NPCC Key Facility Maintenance Tables. All areas must implement changes at the same time.

Not aware of any regional variance or business practice.

• Requirements 4.2.5.4 and 4.2.5.5 require clarification. It is recommended that the drafting team provide a schematic diagram to provide clarity as to which generator and system connected transformers are included in this facility identification. • When Measures are added to the Standard, the Standard Drafting Team must consider how the owner will be required to assess and document the decision of which table will apply to each protection. While this is a compliance element, the Standard should provide clarity on this matter. As written, the requirement does not seem to be measurable. • Requirement R4 requires clarification on what is meant by “including identification of the resolution of all maintenance correctible issues as follows:” Correctible issues should not be combined in the same sentence with the layout of the tables. • Table 1b: In the section for “Protection system communication equipment and channels”, there needs to be clarification on “verify that the performance of the channel and the quality of the channel meets the performance criteria, such as via measurement of signal level, reflected power, or data error rate.” This may be done as a pass fail test during trip checks. If the communication line successfully sends proper signals for the trip checks, then the communication line is acceptable and no additional measurement are taken. • Table 1c: There is some confusion on what is expected on items that have a Maximum Maintenance Interval reported as “Continuous”. For example, a component in the “Protection System telecommunication equipment and channels” how would one provide documentation or proof of the continuous verification of the two items listed in the maintenance activities? In other words how does one prove “Continuous verification of the communication equipment alarm system is provided” and “Continuous verification that the performance and the quality of the channel meet the performance criteria is provided”. These activities appear to be “monitoring attributes” more so than they are maintenance activities. Additionally, the Continuous “Maximum Maintenance Interval” needs clarification because: o the interval is a monitoring interval and not a maintenance interval o a strict interpretation of “Continuous” could require redundant monitoring systems be installed or locations staffed by personnel to monitor equipment in the event remote monitoring capabilities are unavailable o It is unclear how to provide proof to an auditor that continuous monitoring has occurred over a given interval • Table 1a, 1b, and 1c: The maintenance activity for battery chargers are to perform testing of the charger at full rated current and verify current-limit performance. The drafting team should provide an industry standard as how to perform this check, or specify an industry equivalent test. • The Table 1b Level 2 Monitoring Attributes for Component “Monitoring and alarming of continuity of trip coil(s)” should be changed to read “Monitoring and alarming of continuity of all DC circuits including the trip coil(s)”. The present wording is confusing and can be interpreted to mean that the DC control circuitry needs to be checked every 12 years, as opposed to what we perceive to be the intended 6 years. • The Maintenance Activities in Table 1c are not consistent with the Level 3 Monitoring Attributes for Component “Protection system telecommunications equipment and channels.” “Continuous verification of interface to protective relays” should be added as a third activity should be added under the Maintenance Activities column. • In Section A. Introduction, 4.2.4 should be made to read “Protection System

components which are installed as a Special Protection System for BES reliability." • For Requirement 4.1, a "grace period" similar to the NPCC criteria should be considered in case it is not possible to obtain any necessary outages to get the prescribed maintenance done. • Requirement R1 should be modified to read "Each Transmission Owner, Generator Owner, and Distribution Provider shall develop, document, and implement a Protection System Maintenance Program (PSMP) for its Protection Systems that use… This revision reinforces what is necessary to ensure proper compliance with the program. • The standard has multiple component tests required at different and conflicting intervals, some interdependent. Preference is to have the component listed with a common maintenance and testing interval assigned (list the testing required at 2, 4 and 6 years). This same interval should apply to all areas in the table. • Life span of PC's, software and software license's are much less than 12 years or asset life. This presents a problem during an audit where proof is required. The components in modern relays have not been proven over these extended time periods, users are dependent on proper functions of the alarm output of IED's. Prefer more frequent maintenance cycles over having to continuously document proof of a robust CBM or PBM program. • The burden placed to provide proof of compliance with a CBM or PBM maintenance program seems to outweigh any benefit in maintenance costs or reliability.

Individual

John E. Emrich

Indianapolis Power & Light Co.

Yes

No

Many preventive maintenance programs have testing tolerances which are tighter than the manufacturer's tolerances. This practice is used to force an action prior to falling outside of the manufacture's tolerances and accounts for slight variations in test equipment and environment. Maintenance correctable issues should not be reportable unless the test failure falls outside of the manufacturer's published tolerances. In tables 1a through 1c the "Type of Component" columns in each table do not have consistent listings from one 1a to 1b to 1c. The type of component should be identified consistently in each table. By doing so this would eliminate confusion in moving from one table to the other. The maintenance activities for some types of components specifies how (ie Test and calibrate the relays….with simulated electrical inputs) while other maintenance activities do not specify how. The maintenance activities should either all be specific or all be generic. For Station dc Supply (that has as a component any type of battery) the maintenance activity of "verify that no dc supply grounds are present" there is a problem of tolerance. It is impossible to have "no dc supply grounds present". There has to be some tolerance given here such as a voltage measurement form each battery terminal to ground +-15 volts of nominal for example. For the type of component of "Protection System Control Circuitry (trip circuits) (UFLS/UVLS Systems only), the maintenance activity requires a complete functional trip test….of the Protection System. This suggests that a breaker trip test is required at each maintenance interval. This requires tripping breakers that supply customers. It is impossible to trip each individual distribution feeder without forcing an outage on some customers as when there are no other usable circuits to tie the load off to. A failure to trip of a single distribution circuit in the overall scheme of a UVLS or UFLS scheme would have little effect on the BES. Trip testing BES breakers and verifying correct operation of breaker auxiliary contacts could become very difficult to accomplish since opening a breaker on a line might adversely affect the BES. ISOs may prohibit such an activity at any time. Allowances should be made for BES circuit breakers that can not be operated for such reasons if documented sufficiently.

No

See comments in number 2 above.

Yes

No

Establishing historical performance and keeping the documentation up to date makes this almost useless

No

No

Performing some of the maintenance activities may cause conflict with regional ISOs and their safe operation of the BES

Individual

Glenn Hargrave
CPS Energy
Yes
No
While I agree for the most part, there are some activities that are unclear. Specifically, the testing of voltage and current sensing devices, some of the trip coil testing, and some of the communications testing. If the trip coil is now going to be included in the definition of the protective system, is the testing defined adequate? The testing of the voltage and current sensing devices is not entirely clear.
No
The first problem that I have is the 3 Months for the Protection system communications equipment and channels component. My main concern with this interval is that it is so extremely short and I am concerned that there may not be any rational behind it. What studies, surveys, or statistical data were used to determine that 3 months is necessary to protect the reliability of the BES? It doesn't make sense that a communications signal needs to be checked every 3 months but the protective relay that utilizes that scheme needs to be checked at most only every 6 years. What concerns me the most with the 3 month interval for my company is with on-off power line carrier DCB schemes. We only have these schemes on tie lines, and it can be difficult to implement a checkback system with another utility who might utilize different carrier equipment. This type of scheme is also intended to be inheritantly insecure and is frequently more or less tested with faults in the system. The SPCTF should do surveys to determine what is presently done with these type of systems or provide some other rationale for the communication requirements. It is not totally clear from the documents, but it appears that the only way to avoid the 3 month check for an on-off power-line carried DCB scheme is to have an automated check back scheme. Is this correct? Or is alarming from the carrier equipment adequate? My second problem is with the 6 year maximum maintenance interval for the breaker trip coil in tables 1b and 1c. By having to verify that each breaker trip coil is electrically operated, you might as well perform a functional test to test the protection system control circuitry. Electrically operating the trip coil tests the breaker as much as it test the actual trip coil. Also, if you have a primary and secondary trip coil, is it really necessary to test this often? What studies or statistical data were used to determine that testing the breaker trip coils every 6 years is necessary to protect the reliability of the BES? My third problem is with the intervals requirements for the UVLS/UFLS systems. Other than testing and calibration of electromechanical UVLS/UFLS, most other tests probably should require at most 10 years for these type of systems. These systems don't require the performance level of most other systems as stated in the supplementary reference. The testing and calibration of electromechanical UFLS should possibly be even shorter than the 6 year requirement due to problems with drift with these type of relays. What studies, surveys, or statistical data were used to determine the intervals in related to UFLS/UVLS.?
Yes
Yes
Yes
Adds to the confusion with the standard, FAQ, and Supplemental. The three documents at times describe things a little differently.
Yes
Adds to the confusion with the standard, FAQ, and Supplemental. The three documents at times describe things a little differently.
Have several comments and questions: 1. I think that the way that the tables are done is confusing. My biggest complaint is that the "breakdown" of the Type of Component varies between the tables. For example, in tables 1a and 1B, you have Protective Relays, but in table 1c, you have Protective Relays and Protective Relays with trip contacts. This is a little confusing at times. 2. I also find the UFLS/UVLS requirments confusing as well. It can be confusing to figure out when the UFLS/UVLS has a separate requirement. Would prefer to see the UVLS/UFLS in separate tables; e.g. 2a, 2b, 2c. 3. SPCTF should provide the basis for how the intervals in table 1 were derived. While the supplemental describes that a survey of its members with a weighted average was used to determine the maintenance intervals. However, what is not clear is what exactly was surveyed in terms of components. Was it just relay calibration testing? Functional testing? What about communications, voltage and current sensing devices, trip coils, etc? Was UVLS and UFLS looked at separately from transmission? Was generation also considered as well? Why did values change from the SPCTF technical reference "Relay

Maintenance Technical Reference" dated September 13, 2007. For example, UVLS/UFLS testing and calibration went from 10 years to 6 years for un-monitored, communications went from 6 months to 3 months for un-monitored, and instrument transformer testing went from 7 years to 12 years for un-monitored systems. What are the basis for the intervals? 4. The committee should reconsider the use of the term "A/D converters". The point of the requirement is to assure that the analog signal from the instrument transformer is correct to the processor. Two problems with just saying "A/D converters". One, it ignores the digital relay input transformers of microprocessor relays. The SEL-4000 test set can bypass these transformers. Would using this test set be adequate to test the "A/D converters"? Two, some relays, such as the SEL-311L, perform an A/D self-test. I do not think that the A/D self-test performs the testing that is being sought by the document. 5. Could a better example of "Calendar Year" be provided? Is it simply the years difference, or should the days be included as well? I your example in the reference document, you show that December 15, 2008 and December 31, 2014 as meeting the requirement of 6 calendar years. Woudl like to see a more exaggerated example. Would an unmonitored protective relay is calibrated on January 1, 2008 and then again on December 31, 2014 meet the "Maximum Maintenance Interval" of "6 Calendar Years"? 6. Does the standard address breakers and other switching devices that do not have "trip coils". Magnetic actuated circuit breakers, reclosers, and possibly other devices do not have trip coils to monitor or test. Do the trip coil testing and requirements fully take this account? If a breaker does not have a trip coil, is some other type of test required? Does not having a trip coil prevent extending the Protection System Control Circuitry inteval to 12 years? 7. The requirement for testing Voltage and Current Sensing devices should be better thought out as to what is trying to be accomplished. On page 11 of the reference document, item 6 under "Additional Notes for Table…", it states that "phase value and phase relationships are both equally important to prove". In both the FAQ document (page 6, 3A) and the reference document (page 21, 15.2), several methods to verify the voltage and current sensing inputs to the protective relays and satisfy the requirement are given. However, these methods do not all seem to verify the same thing. Totalizing watts and vars on the bus verifies that the current transformers are correctly and providing correct signals to the relays, but do not necessarily verify that the voltage sensing device is necessarily correct if the same PT is used for all relays on the bus. Performing a saturation test on a CT and a ratio test on the PT does not verify the phase angle relationships, which is stated as important on page 11 of the reference document. What exactly needs to be accomplished by the Voltage and Current Sensing devices testing? That an analog signal is getting from the instrument transformer to the device? That the signal is an accurate representation of the measured quantity? What about frequency for UFLS relays, where voltage magnitude may not be that important? Do CT's need to be verified for multiple CT grounds? Do the any examples described necessarily find multiple ct grounds? 8. This standard should also address the ramifications of RRO's not allowing for equipment to be removed from service for testing. Either RRO's should be required to allow outages in some time frame or leeway should be given to entities that cannot get equipment out for maintenance because RRO's will not grant reasonable outage times for testing and maintenance. 9. Page 13 of the reference document states that the 3-month inspection should include checking that "equipment is free of alarms, check any metered signal levels, and that power is still applied." What is meant by "metered signal levels"? What does the term "metered" mean, specifically in terms of an on-off power line carrier scheme. 10. It appears that if a company on a TBM plan has shorter intervals than the maximum allowable of this proposed standard, the company would not be in violation if they did not meet their own plan but still met the intervals required by this proposed standard. Is this true? Could this actually reduce reliability of the BES if companies are now allowed to extend intervals to those listed in this document without any justification?
Individual
Darryl Curtis
Oncor Electric Delivery
Yes
Yes
Yes
Yes
Yes
Yes
The “Supplementary Reference Document” provides good technical justification for the various approaches to a maintenance program (Time Based, Performance Based, and Condition Based) or combinations of these programs that an owner of a Protection System can follow.

Yes
The FAQ document is an excellent resource document for Protection System Owners to understand why the maintenance activities listed in the proposed standard were chosen.
The drafting team is to be commended for taking the Technical Paper and Draft Standard that was prepared by the NERC System Protection and Control Taskforce (SPCTF) and the recommendations of the SAR drafting team to create PRC-005-2. This draft standard allows the owners of Protection Systems several options in establishing a maintenance program tailored to their equipment and the topography of their system.
Group
PacifiCorp
Sandra Shaffer
Yes
No
No comment.
No
No comment.
Yes
Yes
No
Very helpful.
No
Very helpful.
None known.
None known.
What is the definiton of "Calendar Year"? Does the term "Six calendar years" include any date in 2004 to any date in 2010?
Individual
Armin Klusman
CenterPoint Energy
No
a. CenterPoint Energy believes the approach taken by the SDT is overly prescriptive and too complex to be practically implemented. The inflexible minimum “maintenance activities” approach fails to recognize the harmful effects of over-maintenance and precludes the ability of entities to tailor their maintenance program based on their configurations and operating experience. In particular, the loss of maintenance flexibility embodied in this approach would have perverse consequences for entities with redundant systems. Entities with redundant systems have less need for maintenance of individual components (due to redundancy) yet have twice the maintenance requirements under the minimum “maintenance activities” approach. For example, Table 1A calls for performing a specific gravity test on “each cell’ of vented lead-acid batteries. CenterPoint Energy believes such a requirement is dubious for entities that do not have redundant batteries, and absurd for entities that do. CenterPoint Energy has installed redundant batteries in most locations and has had an excellent operating history with batteries by using a combination of internal resistance testing and specific gravity testing of a single “pilot cell”. This practice, combined with DC system alarming capability, has worked well. b. CenterPoint Energy is opposed to approving a standard that imposes unnecessary burden and reliability risk by imposing an overly prescriptive approach that in many cases would “fix” non-existent problems. To clarify this last point, CenterPoint Energy is not asserting that maintenance problems do not exist. However, requiring all entities to modify their practices to conform to the inflexible approach embodied in this proposal, regardless of how existing practices are working, is not an appropriate solution. Among other things, requiring entities to modify practices that are working well to conform to the rigid requirements proposed herein carries the downside risk that the revised practices, made solely to comply with the rigid requirements, degrade reliability performance. c. Arguably, an entity could possibly return to its existing practices, if those practices are working well, by navigating through the complex set of options and supporting documentation that the SDT has crafted in this proposal. However, most entities, have an army of substation technicians with various ranges of experience to perform maintenance on protection systems and other substation components. It is unrealistic to expect most entities making a good

faith effort to comply with this proposal to have a full understanding throughout the entire organization of all the nuances crafted into this complex proposal. d. For the reasons outlined above, CenterPoint Energy does not agree with the proposal to specify minimum maintenance activities. However, if the majority of industry commenters agree with the SDT's proposal, CenterPoint Energy has concerns about some of the proposed tasks. For Protection System control circuitry (trip circuits), Table 1A calls for performing a complete functional trip test. The "Frequently-asked Questions" document states that this "may be an overall test that verifies the operation of the entire trip scheme at once, or it may be several tests of the various portions that make up the entire trip scheme". Such a requirement creates its own set of reliability risks, especially when monitoring already mitigates risks. CenterPoint Energy is concerned with this standard promoting an overall functional trip test for transmission protection systems. This type of testing can negatively impact reliability with the outages that are required and by exposing the electric system to incorrect tripping. CenterPoint Energy views overall functional trip testing as a commissioning task, not a preventive maintenance task. CenterPoint Energy performs such testing on new stations and whenever expansion or modification of existing stations dictates such testing. Overall, CenterPoint Energy recommends minimizing, to the extent possible, maintenance activities that disturb the protection system; that is, placing the protection system in an abnormal state in order to perform a test. e. For Protection System control circuitry (breaker trip coils only), Table 1A calls for verifying the continuity of the trip circuit every 3 months. CenterPoint Energy is not sure what would be the expected task to meet this requirement (it is not addressed in the "Frequently-asked Questions' document).

No

a. See CenterPoint Energy's comments made in response to question 2. Imposing inflexible maximum interval requirements has the same basic problems as imposing inflexible minimum task requirements. The inflexible "maximum interval" approach fails to recognize the harmful effects of over-maintenance and precludes the ability of entities to tailor their maintenance program based on their configurations and operating experience. The maximum interval approach also has same perverse consequences for entities with redundant systems as the minimum interval approach. b. Furthermore, the rigid maximum interval approach embodied herein does not sufficiently take into consideration common natural disaster situations. Several of the preventive maintenance tasks proposed in this standard have a maximum interval of 3 months, which is problematic under normal circumstances and unworkable when routine maintenance activities have a much lower priority than emergency repair and restoration. An interval as short as this does not provide a sufficient maintenance scheduling horizon to complete the tasks. The SDT could attempt to address this shortfall by modifying the draft to account for natural disaster situations. For example, the FERC-approved NERC reliability standard FAC-003 for Vegetation Management does include such allowances for natural disasters, such as tornados and hurricanes. However, even if that specific problem is addressed, the fundamental problems created by an overly prescriptive maximum interval approach remains.

No

a. CenterPoint Energy lauds the SDT for recognizing that strict imposition of the maximum interval approach creates problems which the SDT attempts to correct by allowing performance-based adjustments. CenterPoint Energy believes the majority of industry commenters will agree with CenterPoint Energy's assessment that the maximum interval approach is problematic and should be dropped from the proposal. However, if the majority of industry commenters agree with the SDT's approach, then a performance-based option to correct the problems introduced by the maximum interval requirements should remain. b. CenterPoint Energy answered "No" to question 5 because CenterPoint Energy believes the arduous path of creating a new set of problems with a rigid approach (maximum interval requirements) and then introducing a complex set of auditable requirements to provide an option (performance-based maintenance) to mitigate the harm of the rigid approach is ill-advised and fraught with pitfalls. Stated otherwise, using performance-based adjustments to correct inappropriate maximum intervals would not be necessary if the inappropriate maximum intervals were not imposed. CenterPoint Energy believes a better approach is to avoid introducing the new set of problems that then have to be mitigated by not imposing problematic maximum intervals. c. Followed to its logical conclusion, using performance-based adjustments to correct inappropriate maximum intervals is a contorted way of arriving at the philosophy embodied in the current set of standards in which entities determine the maximum intervals appropriate for their circumstances and performance. CenterPoint Energy's concern is that the contortions needed to arrive at the same point, in addition to being unnecessary, will be difficult for most entities to navigate. An entity making a good faith effort to comply with the performance-based adjustments will have to navigate through the complexities and nuances of the approach, as illustrated by the extensive set of documents the SDT has provided in an attempt to explain all the requirements and nuances. As an entity attempts to manage this hurdle, the entity will likely have to deal with the reality that the granularity of performance metrics do not exist in most cases to justify to an auditor the rationale for the adjustments to the inappropriate maximum intervals. For example, CenterPoint Energy has asserted that it has had good battery performance using existing practices. However, the

assertion is anecdotal. CenterPoint Energy cannot recall any instances where it had a relay misoperation due to battery failure in over twenty five years. CenterPoint Energy does not attempt to keep performance metrics on events that historically occur less than four times a century and CenterPoint Energy believes most entities will be in the same situation. d. If an entity is somehow able to overcome these hurdles, the entity will almost certainly encounter skepticism for what will be viewed as an exception to the default requirement embodied in the standard. Even if an entity can overcome likely skepticism in an audit, the entity will be in a severely disadvantaged situation if a protection system component for which the maintenance interval has been adjusted, based on the entity's good faith effort and reasoned judgment, nevertheless is a contributing factor in a major reliability event investigation, regardless of whether the maintenance interval adjustment contributed to the failure. No matter what maintenance intervals are used, protection system components could fail. If the maintenance interval has been adjusted and if failure occurs, it will likely be unknown whether the interval adjustment was in fact a contributing factor or whether the failure would have occurred anyway. e. Faced with this dilemma, in addition to all the other hurdles to overcome in attempting to adjust an inappropriate maximum interval, the reality is that most entities will accept the inappropriate maximum interval and over-maintain their protection system components, and introduce a new set of reliability risks from such over-maintenance. For these reasons, CenterPoint Energy advises against creating a new set of problem by imposing rigid maximum intervals and then attempting to correct the problems through a performance-based mechanism that in actual practice would likely be illusory.

Yes

CenterPoint Energy believes the need for an extensive "Supplementary Reference Document", in addition to 13 pages of tables and an attachment in the standard itself, illustrates that the proposal is too prescriptive and complex for most entities to practically implement. CenterPoint Energy would prefer the SDT leave the existing requirements substantially intact or, if most industry commenters prefer the SDT's approach, that the SDT attempt to simplify it.

Yes

See CenterPoint Energy's response to question 6. The need for an FAQ document in addition to an extensive "Supplementary Reference Document" further illustrates the complexity and impracticality of the proposed standard revisions.

a. CenterPoint Energy believes the existing maintenance standards are preferable to the approach embodied in this proposal. However, if most entities agree with the SDT's approach, CenterPoint Energy recommends deleting Under-Frequency Load Shedding (UFLS) and Under-Voltage Load Shedding (UVLS) system equipment from the scope of this proposal because the performance requirements for UVLS and UFLS are substantially different from transmission and generation protection schemes. Few would argue that protection schemes that clear faults on the Bulk Electric System must be very reliable, much more reliable than schemes that shed distribution load for under-voltage or under-frequency situations. If an entity plans to shed a contemplated level of load for a contemplated set of circumstances based upon planning simulations, that plan would translate into a certain number of distribution feeders that are reasonably predicted to shed a load amount that is reasonably close, but not exactly equal (unless by chance) to the contemplated amount of load shed. For example, if a certain number of distribution circuits equals 10% of the entity's load during one time (such as system peak), that same amount of distribution circuits will almost certainly equal a different percentage of the entity's load at other times. So, if hypothetically 100 distribution circuits are armed with UVLS or UFLS relays set a given trip point, the actual percentage of load that will be shed will vary under different system conditions. Therefore, if 95 of the distribution circuits actually trip on one occasion and 98 trip on another occasion, the difference in system performance is immaterial because the exercise is not that precise, especially when planning simulation uncertainties are also introduced into the picture. For these reasons, CenterPoint Energy believes it is unreasonable to impose a high level of rigidity into load shedding schemes when the designs of the schemes inherently do not depend on such rigidity. If the SDT agrees, then the revised standard would not be applicable to Distribution Providers, and 4.1.3 can be deleted. b. CenterPoint Energy also disagrees with the proposed expansion of the Protection System definition. The present definition does not include trip coils; and correctly so, as trip coils are part of the circuit breaker. A protection system has correctly performed its function if it provides tripping voltage up to the breaker's trip coils. From that point, the breaker can fail to timely interrupt fault current due to several factors such as a binding mechanism that affects breaker clearing time, a broken pull rod, a bad insulating medium, or bad trip coils. Local breaker failure protection is installed to address the various possible causes of circuit breaker failure. Planning standard TPL-001 tables 1C and 1D specifically support the present definition, as Delayed Clearing is noted as due to "stuck breaker or protection system failure".

Individual

Howard Gugel

Progress Energy

Yes

No

Progress Energy does not agree with the activity “Verify that the battery charger can perform as designed by testing that the charger will provide full rated current and will properly current-limit.” We are unclear how this test should be performed.

No

The rational for microprocessor-based relay intervals is examined, but all others are strictly based on industry weighted average of survey results. We believe the team should use a more empirical, documented approach to determining these intervals, as many companies have longer intervals that they currently have documented for their basis. If these have been accepted as satisfactory in previous audits, why should they be required to change just to meet an arbitrary number?

Yes

Progress Energy is concerned that separating this document from the standard may lead to issues down the road. If the desire is to consolidate and clarify existing standards, then the two documents should be merged. Otherwise the reference document may get lost from the standard, or might get changed without due process, or might not even be recognized by FERC.

Yes

Progress Energy is unclear how a new/revised standard can have a 30 page FAQ document associated with it. If questions need to be addressed, the answers should be incorporated into the existing standard. During this stage of the draft, all questions should be addressed, not left to the side in an “interpretation” paper.

Comments: 1- Requirement R4 “Each Transmission Owner, Generator Owner, and Distribution Provider shall implement its PSMP, including identification of the resolution of all maintenance correctible issues as follows: “ Based on the definition provided (A maintenance correctable issue is a failure of a device to operate within design parameters that can be restored to functional order by calibration, repair or replacement.) Pr ogress Energy believes that this will become a potential tracking issue. To maintain all of the data required to meet this definition can be onerous. 2- The biggest concern with the proposed PRC is that for many entities, the proposed maintenance and intervals will greatly increase the entities’ workloads. There are not enough relay technicians available to handle this increased workload across the country. 3- The Implementation Plan for R2, R3, and R4 identified in the Draft Implementation Plan for PRC-005-02, dated July 21, 2009, is very reasonable. This plan recognizes that it is unrealistic to expect entities that are presently using intervals that exceed the maximum allowable intervals to immediately be in compliance with the new intervals. It allows implementation to be implemented across the maximum allowable interval. This is a reasonable approach for the following reasons: a. Sufficient resources are not available to perform the additional maintenance proposed on an accelerated basis. b. It allows the staggering of the PMs so that resource loading can be balanced. Without the ability to stagger the PMs, there would be an initial “bow-wave” of PMs and future “bow-waves” each time the interval is up. 4- The Implementation Plan for R1 identified in the Draft Implementation Plan for PRC-005-02, dated July 21, 2009, is not reasonable. The implementation plan requires entities to be 100% compliant three months following approval of the PRC. This is not a reasonable timeframe given the program changes required, including: a. A massive effort to review circuit schematics to determine whether equipment meets the definition of partial-monitored or unmonitored. b. Many procedures, basis documents, and job plans will need to be revised or created. c. The work management tool will have to be modified to reflect the new intervals. 5- PRC-008-1 placed only the relays associated with UFLS in the compliance program. Contrary to PRC-008-1, the draft PRC-005-02 places all components (relays, instrument transformers, dc supply, breaker trip paths) in the compliance program. This forces much of the distribution-level components to be placed in the compliance program. 6- The response to Item 2A of the FAQ Document, page 17, seems to indicate that commissioning test results do not have to be captured as the initial test record, only the in-service date. Is this a correct interpretation of the response? 7- Table 1a (Unmonitored Protection Systems) seems to indicate that a complete functional trip test must be performed for the UFLS/UVLS protection system control circuitry. This wording is identical with the wording for the protection system control circuitry (except UFLS/UVLS) table entry. This implies that UFLS/UVLS functional testing should include tripping of the feeder breakers for these unmonitored systems. Table 1b (Partially-Monitored Protection Systems) indicates that actual tripping of circuit breakers is not required under the UFLS/UVLS control circuit functional testing. Is this because trip coil continuity is being monitored and alarmed under Level 2 Monitoring?

Must feeder breakers be tripped during the functional testing if the trip coil continuity is not monitored and alarmed (unmonitored protection system)? 8- All standards to be retired should be specifically listed in the Implementation Plan.

Individual

John Moraski

BGE

PRC-005-2 R1 1.2 “Identify whether each Protection System component is addressed through time-based, condition-based, performance-based, or a combination of these maintenance methods and identify the associated maintenance interval.” Comment: The existing standard PRC-005-1 requirement R1.1 says a maintenance program must include the maintenance and testing intervals and their basis. PRC-005-2 does not have a similar requirement, and the associated FAQ indicates the standard “establishes the time-basis for a Protection System Maintenance Program to a level of detail not previously required”. Does PRC-005-2 require evidence to support the basis for a defined maintenance interval, or is the basis now purely defined by PRC-005-2? R2 “ Each transmission owner .....shall ensure the components to which condition-based criteria are applied....possess the necessary monitoring attributes” Comment: Depending on the evidence requirements that are enforced this could be a very large undertaking offsetting the benefit of extending intervals with CBM. It would be helpful to understand what the drafting team or other stakeholders would envision as appropriate evidence supporting this requirement. R4 “Each transmission owner .....shall implement its PSMP, including the identification of the resolution of all maintenance correctable issues as follows : 4.1 ....within the maximum allowable intervals not to exceed those established in table 1a, 1b, 1c Comment: It’s inferred that this requirement applies to maintenance correctable issues that are discovered as a consequence of scheduled maintenance and not as a consequence of monitoring or misoperations. If that inference is incorrect the requirement imposes an unequal playing field for the resolution of known correctable issues depending on the monitoring being employed, not to mention an unreasonably long allowance for the correction of some serious problems. On the other hand, the requirement imposes an unreasonably short period of time for the resolution of some issues that may be associated with short interval maintenance/inspection intervals, such as battery grounds. Section D 1.4 Data Retention “The Transmission Owner..shall...retain documentation for two maintenance intervals....” Comment: Recognizing that in order to achieve compliance PS owners will execute scheduled maintenance on shorter intervals than the maximum requirement it’s uncertain what this means. Example: Max interval for instrument transformers is 12 years, we maintain every six. Is the requirement for 24 years of data or 12. It seems like there ought to be an upper limit. 24 years is a very long time. Table 1a Protection System Control Circuitry (Breaker trip coil only) ; 3 month maximum interval ; “verify the continuity....of the trip circuit .....except for breakers that remain open for the entire maintenance interval.” Comments: What’s the failure-probability justification for this requirement when other similar dc control components have a maximum interval of 6 years? It seems like the SDT made an assumption that all trip coils are monitored by red lights and could be verified by inspection and said somewhat arbitrarily, “do it because you can”. “Remaining open for the entire maintenance interval” is a poorly reasoned effort to arrive at a necessary exception. Even if the red-light-through-the-trip-coil assumption is accurate for a normally open breaker, it’s unreasonable to demand that an inspection take place if its closed at anytime during the interval. The actual time that its closed might be seconds or a few minutes, but that time would make the exception moot and put the owner out of compliance. On the subject of three month maximum intervals in general: One can agree that three months is about the right time for some of these inspections, batteries in particular. However as written, three months and a day is “out of compliance”. More flexibility would avoid a lot of meaningless “technical fouls”. How about four times a year not more than four months between each...or something like that. Table 1a Station DC supply (that has as a component any type of battery); “verify that no dc supply grounds are present” Comment: All grounds are not created equal. No guidance for acceptance criteria is given, nor is evaluation/acceptance criteria explicitly made the responsibility of the battery owner (as it is for relay calibration) . Without any guidance the requirement of “no” grounds is open to unreasonable interpretation (there is always a ground if one considers a high enough resistance) and high impedance grounds that do not present a risk to the PS will consume effort and attention unnecessarily. Station DC supply (that has as a component any type of battery);

“Measure the specific gravity and temperature of each cell is within tolerance” Comment: It is not clear that a specific gravity test provides any better data concerning battery health than an impedance test, but specific gravity testing is a requirement. Can the impedance test be performed as routine maintenance in lieu of a specific gravity test? General Comment: It is not clear whether Communications batteries should be held to the same testing/maintenance requirements as the station battery. Communications batteries are in place to supply relatively low power electronic equipment and do not have to provide energy to trip a breaker. Simple monitoring of the channel may be sufficient to assure battery availability, and a less rigorous maintenance plan may be appropriate based on the continuous monitoring and low duty of the battery. FAQ Group by Monitoring Level A level 2 (partially) monitored Protection System or an individual component of a level 2 monitored Protection System has monitoring and Alarm circuits on the Protection System components. The alarm circuits must alert a 24-hour staffed operations center. Comment: The Standard Table 1b, General Description for Level 2 monitoring is simply described as Protection System components whose alarms are automatically provided daily (or more frequently) to a location where action can be taken for alarmed features. This appears to be a conflict between the FAQ and the standard. The more stringent requirement of the FAQ, for the reporting facility to be manned 24 hours per day, could be read to imply a requirement for a specific time to respond to an alarm. Is there such a requirement? Is there an implied requirement to document the alarm condition and the response time?

Individual

Dale Fredrickson

Wisconsin Electric

Yes

No

1. Page 7 Station DC Supply (Batteries): The activity to verify proper electrolyte level should only apply to unstaffed (unmanned) stations; checking battery electrolyte levels is routinely done in generating stations, which are staffed with personnel continuously (24 x 7). In addition, the three activities listed here with a 3 month interval for batteries (electrolyte, voltage, grounds)should NOT require documentation for compliance purposes. It should be sufficient that these routine and recurring activities (every 3 months) are identified in the Maintenance Plan. Otherwise the administrative burden to provide documentation will become excessive and counterproductive to assuring BES reliability. 2. Page 7 Station DC Supply (Batteries): The 18 month interval includes an activity to verify the battery charger equalize voltage. This activity is normally done only when the bank is load tested. Therefore the activity to verify equalize voltage of a charger should have a 6 year interval along with the other battery charger activities to verify full rated current and current-limiting. 3. Page 9 Communications Equipment: Similar to #1 above, the activity to verify monitoring and alarms should NOT require documentation in order to demonstrate compliance. Having these routine 3 month activities in the Maintenance Plan is sufficient. This needs to be clarified in the standard. Also, this requirement should be re-worded to refer to generating stations also, not just substations. 4. Page 11 Station DC Supply (Batteries): Like #1 above, the similar requirement in Table 1b for verifying battery electrolyte levels should be revised to indicate that documentation is NOT required. 5. Page 6 Prot System Control Circuitry: Like #1 above, the 3 month activity to verify continuity of breaker trip circuits is fine, but there should be no requirement to document the readings or observations; it is sufficient that this activity be addressed in the Maintenance Plan, especially for staffed generating stations. 6. Page 6 Prot System Control Circuitry: For the 6 year activity to "perform a functional trip test...": is this a requirement to actually trip the circuit breaker ? If yes, this should be stated clearly in the Maintenance Activity description. 7. We are concerned that the Maintenance Activities are not appropriate for certain equipment. The RFC definition of Bulk Electric System includes any protection equipment that can trip a BES facility independent of voltage level. As an LSE, this includes distribution-level equipment that was not designed to the same level of redundancy as Transmission equipment. Complying with the requirements for control circuitry functional testing and current sensing device testing will actually decrease system reliability since this often cannot be accomplished without requiring outages to major distribution system components and/or temporarily breaking protection circuits. We propose that this type of testing on distribution systems which fall under the definition of BES Protection Systems should be addressed separately from the rest of the BES Protection Systems in this standard. The intervals and/or maintenance activities should reflect the differences in how these distribution protection systems are designed and operated.

No

Similar to comments in #7 above: It is our practice on distribution-level protection systems to utilize a 6 year interval plus/minus 1 year to accomodate potential scheduling conflicts. This is consistent with other LSE's relay testing practices as well. Thus the potential 7 year maintenance interval would be a violation of the draft requirements. The maintenance intervals in this standard should be increased accordingly for distribution protection system equipment.

Yes

Yes

Yes

How much authority or weight will this document have with Compliance staff? If potential violations of the standard requirements are alleged by Compliance staff, can this document be cited by an entity when the document provides clarifying information on the requirements ?

No

Regional Variance

See above Question 2, Item 7: There needs to be some recognition that Protection System's applied on distribution-voltage systems may be included in a regional definition of a BES Protection System. These systems are not designed or operated in the same way as Transmission or Generation Protection Systems. Therefore, it is reasonable that these systems be subject to less rigorous requirements.

1. In the definition of a Protection System Maintenance Program, the statement is made that "A maintenance program CAN include...", with a list of seven attributes following. Is it the intent that the PSMP "SHALL include one or more of the following" ? What is to prevent Compliance staff from concluding that all seven of these attributes MUST be included in the PSMP ? 2. The standard should more clearly describe what is meant by "verify..." when used in a Maintenance Activity description. Does this require actual paper or electronic documentation? If so, then this should be explicitly stated in the Maintenance Activity description. We maintain above that the recurring and routine maintenance activities having a 3 month interval should be revised to use alternate words such as "Check" or "Observe". For example, "Check the continuity of the breaker trip circuit...", or "Observe the voltage of the station battery". This activity should not be required to have paper or electronic documentation or evidence. It should be sufficient to have these activities included in the PSMP. 3. It is stated in the Supplementary Reference that actual event data from fault records may be used to satisfy certain Maintenance Activities, yet the standard itself does not appear to allow for this. Will such evidence be accepted by Compliance staff?

Group

Florida Municipal Power Agency, and its Member Cities as follows: New Smyrna Beach; City of Vero Beach; and Lakeland Electric

Frank Gaffney

Yes

No

FMPA does not believe that maintenance of each UFLS / UFLS systems are as important as maintenance of BES protection systems. The fundamental reason is that delayed or uncleared faults on the BES can cause system “instability, uncontrolled separation, and cascading outages”; therefore, BES protection systems are very important; however, if a small percentage of UFLS / UVLS relays mis-operate as a result of a frequency or voltage event, the impact of the mis-operation is much smaller, if even measurable. As a result, FMPA believes that the emphasis of the maintenance activities ought to be placed on those systems that can have the most impact on what the standards are all about, as Section 215(a)(4) of the Federal Power Act says, “avoiding instability, uncontrolled separation, and cascading outages”. As a result, FMPA believes that full functional testing, while important for BES protection systems, is not necessary for UFLS and UVLS systems (Table 1a, page 6 and Table 1b, page 11). Because most UFLS / UVLS are on radial distribution feeders, such testing will cause outages to customers fed on radial distribution circuits and transmission lines without sufficient cause, in other words, the maintenance itself will reduce the reliability the customer experiences. In addition, distribution tripping circuits are more regularly exercised by distribution faults than are transmission tripping circuits; therefore, full functional testing of distribution tripping circuits is far less valuable than testing trip circuits of transmission elements which are exercised less frequently due to actual system events. FMPA is confused with the wording of Table 1a, page 6, row 3 that talks about breaker trip coils. In the “Type of Component” column, the subject says “Breaker Trip Coils Only (except for UFLS or UVLS)”, yet the maintenance activity described states “Verify the continuity of the breaker trip circuit including trip coil”. These two statements are inconsistent because the first statement limits the applicability to just the trip coil and the second statement goes beyond the trip coil. And, FMPA believes the second statement should only apply to the trip coil, e.g., the second statement should say: “Verify the continuity of the trip coil”. In addition, the parenthetical is confusing, is it meant to say that the continuity of the trip coil only needs to be verified when the breaker operates during the 3 month interval, or that the intended continuity check is from the relay contacts through the trip coil, and not from the relay contacts back to the batteries?

FMPA is also confused concerning station DC supply testing. There are multiple rows in Table 1a concerning various types of testing for various types of batteries and chargers that do not exclude UVLS and UFLS, yet on page 8, on the bottom row, the row is exclusive to UVLS and UFLS yet overlaps other rows discussing station DC supply testing. Is it intended that the other rows that are silent as to what they apply to exclude UVLS and UFLS? FMPA believes that should be the case. The same comment applies to Table 1b. FMPA also has concern over the battery charger testing requirements. Per the charger manufacturers recommendations there is no reason to test the chargers as proposed in PRC-005-2. It is their opinion that the chargers are self diagnostic and do not require these tests (full load current and current limiting tests). The charger O&M manuals do not even provide instructions for such tests as optional. Therefore, FMPA takes exception to this requirement and suggests that battery chargers be maintained and tested in accordance with manufacturerâ€™s recommendations
No
FMPA agrees in general with many of the maximum maintenance intervals; however we have been unable to determine what basis was used to arrive at the time based intervals provided in the tables. Further explanation would be appreciated FMPA is concerned with the use of the term “continuous” in Table 1c. As stated, it would seem that, on loss of communications that would communicate the alarm, thereby causing a loss of “continuous” monitoring and alarming, the entity who invested in a reliability improving monitoring system would be found non-compliant with an infinitesimal maintenance period required for “continuous” monitoring. Therefore, FMPA recommends using “not applicable” or some other term in this column.
Yes
FMPA agrees with the approach, but, may not agree with the exact wording in the tables. For instance, the use of the word “every” in table 1c in “Protection System components in which every function required for correct operation of that component is continuously monitored and verified” may be overstating the level of monitoring that would realistically enable a Protection System to use table 1c.
No
FMPA believes that the documented process outlined in Attachment A; "Criteria for Performance Based Protection System Maintenance Program" is biased towards larger entities. The requirement that the minimum population of 60 individual components of a particular segment is required to make a component applicable to this program automatically eliminates most of the small or medium sized entities. Further the need to first test a minimum of 30 indivudual components in any segment reinforces the same size limitation. FMPA suggests that the Performance-Based Protection System Maintenance Program allow for regional shared databases applicable towards meeting the establishment and testing criteria of similar individual components. This practice will allow for the inclusion of entities of all sizes. This will also provide a greater format for the discussion of lessons learned and improvements to the testing database on a regional basis.
No
No
FMPA is not aware of any conflicts
FMPA is not aware of a need for a regional variance
Facilities applicability 4.2.2, due to the changes in applicability of the draft PRC-006, ought to refer say something like UFLS which are installed per requirements of PRC-006 rather than per ERO requirements. In requirement R1, bullet 1.1 ought to state “For each component used in each Protection System, include all “applicable” maintenance activities specified in Tables 1a, 1b and 1c”. For instance, if every component has continuous monitoring, why should the program include 1a and 1b?
Individual
Russell C Hardison
TVA
Yes
Yes
Add clarifying statement from Table 1b for Protection System Control Circuitry (Trip Circuits) (UFLS/UVLS Systems Only) to the same section in Table 1a. Statement is “(Verification does not require actual tripping of circuit breakers or interrupting devices.)"
Yes
Yes

Yes

Should allow inclusion of dc systems as well.

No

No

Business Practice

Allow for deferals to coordinate with generator outages.

Individual

Kirit Shah

Ameren

Yes

We commend the SDT for developing such a clear and well documented first draft. It generally provides a well reasoned and balanced view of Protection System Maintenance, and good justification for its maximum intervals. Our existing M&T Program has and continues to yield a very reliable BES with mostly similar intervals, though some are longer and others shorter. We strongly support the almost all of the applicability revision, which clarifies the boundary of NERC maintenance and testing oversight. We question the addition of UFLS station DC Supply, auxiliary relays, and Generating facility system-connected station service transformers. Have these components been a significant source of problems leading to cascading outages? The SDT also modifies the Protection System definition, mostly clarifying the boundaries. We generally agree except that we recommend adding “fault” before “interrupting devices”.

No

We agree with the vast majority of them, listed below are our few concerns, questions, and pleas for clarification. 1) We disagree with doing specific gravity and temperature of every cell in the 18 month test because the other tests being done are already comprehensive. 2) FAQ 3B p 29 digital relay A/D verification should include simply comparing digital relay displayed metered values to another metered source. 3) FAQ 3A p6 Change “prove that” to “verify”. For single CT or VT, this can be challenging and some measure of reasonableness in determining an expected value comparable to the measured value must be acceptable. 4) FAQ 1B p17 Combining evidence forms of “Process documentation or plans” and “Data” or “screen shots” shows compliance. Please add an example or verbiage to clarify that a field technician’s (or operator) recorded check-off combined with a company’s process is sufficient evidence. Otherwise documentation alone could consume considerable field personnel time. 5) FAQ p2 Add FAQ to clarify “verify settings”. If EM relays are included, explain that minor tap or time dial differences of the order of relay tolerances are acceptable. For digital relays state that software compare functions are a sufficient means to “verify settings.” 6) Omit Table 1b row 3 because row 4 actually applies to Monitoring Level 2 Trip Circuits. Row 3 already appears in Table 1a, and repeating it in Table 1b is confusing. 7) FAQ 4D p 7 then defines auxiliary relays as device 86 and 94. Does device number nomenclature or function determine and restrict inclusion? 8) Please state that “a location where action can be taken for alarmed failures” would include a dispatch center or control room. From there the custodial authority would be called out to take action. 9) Please explain the expansion from station battery to station DC supply, specifically the addition of the charger, an AC to DC device. The charger load test up to its current limiter would add a significant amount of work with little known benefit. Have charger problems been a significant cause of cascading outages? 10) We oppose your expansion of Station DC Supply to UFLS (the last row on page 8.) PRC-008-0 is restricted to UFLS equipment. UFLS is often applied in distribution substations to trip feeders directly serving load. Your scope expansion has the potential to greatly increase the number of substation DC Supplies covered by NERC standards. ,. While we agree that UFLS is BES applicable, and those substations are included in our overall maintenance program, this expansion to NERC scrutiny is not warranted. Have there been UF events in which a material amount of load was not shed because of DC problems? UFLS is spread out amongst many distribution stations, and even if a couple did fail to trip in an underfrequency event, it would have little effect. 11) FAQ 2 p 17 expands the scope at Generating Facilities so that system connected station auxiliary transformers would be included. We oppose this expansion as these are radially served loads, and they often do not result in generation loss. Even if they did, the BES can readily tolerate the loss of a single generator.

No

1) The “zero tolerance” structure proposed combined with the large volume and complexity of Protection System components forces an entity to shorten their intervals well below maximum. We instead propose a calendar increment grace period in which a small percentage of carryover components would be tracked and addressed. For example, up to 10% of all breaker trip coils subject to the 3 month “verify breaker trip coil continuity” could carry over into the first month of

the next period. And for example, up to 5% of an entity's communication channel 6 year verifications could carryover into the next year. These carryover components would be addressed with high priority in that next calendar increment. There are many barriers to 100% completion or zero tolerance. Barriers include sheer volume, obtaining outages, resource availability, coordination, and documentation (over ten thousand components in our utility alone; taking a BES outage to permit maintenance can incur a greater reliability risk than delaying the maintenance; emergent issues such as major storms impact resource availability; coordination with interconnected neighbors, their resources and maintenance timing; record keeping errors or oversights; etc.) 2) Alternatively, components with intervals less than a year should be stated in terms of the number of times annually it should be performed, rather than a short duration interval. The expectation is that they would be roughly equally spaced throughout the year; for example quarterly instead of 3 months. Comment 1 grace period would still apply to components with maximum intervals of 1 year or greater. 3) Some of our maintenance intervals are shorter than maximum. Please confirm that documentation is only to be kept for two of the entity's intervals, not two of the maximum interval. 4) Please add standard language or FAQ near 2D on p 18 that an entity can validly use an interval with % tolerance to achieve maintenance goals, as long as the applicable maximum interval is honored.

Yes

We agree with the condition-based approach. Our comments in 3 above apply to Tables 1b and 1c as well. We note that Table 1b Station dc supply intervals are the same as Table 1a. Why doesn't the monitoring cause 1b intervals to be longer than 1a?

Yes

While we agree with the approach, batteries should be allowed, not excluded.

Yes

1) We disagree with the page 22 statement that batteries cannot be a unique population segment of a PBM. 2) What role does the Supplement play in Compliance Monitoring and Enforcement?

Yes

1) We don't think an Executive Summary is needed. 2) Please include the Supplement's explanation of A/D verification method from Supplement page 9. 3) What role does the FAQ play in Compliance Monitoring and Enforcement? 4) Refer to question 2 and add our items # 2, 3, 4, 5, 7, and 11 to FAQ. 5) Please add FAQ that provides the NERC Compliance Reqistry Criteria for Generating Facilities, to clarify applicability to >20MVA direct BES connection, aggregate >75MVA etc. 6) FAQ 2A p17 states that commissioning is construction, not maintenance. It seems like you're ignoring the significant verification, testing, inspection, and calibration activities that occur in commissioning. Should the in-service date be assigned to these components for determining their next maintenance? 7) Refer to question 3 and add our items # 4 to FAQ.

1) Documentation could be a monumental task. Although FAQ 1B allows a comprehensive set of forms of documentation, a very large number of people are involved across this set at most utilities. Producing a particular needle in the haystack may take longer than an auditor would expect. Inspection forms can be structured to capture abnormal conditions, and thus normal conditions are not recorded. Some items, like the red light monitoring a trip coil, may only be reported by exception (i.e., "red light out, replaced bulb" but if the red light is on an operator may not report that). 2) We presume that the SDT would expect transmission facilities to be switched out of service if maintenance would result in those facilities being unprotected. We think this should be stated or clarified, as there may be entities that still use differential cutoff switches or other means of disabling protection for testing and have not considered the consequences of a concurrent fault.

Individual

Huntis Dittmar

Lower Colorado River Authority

Yes

No

We agree with all stated intervals except for the maximum stated interval of 6 years for Protection System Control Circuitry (Trip Coils and Auxiliary Relays) in tables 1b and 1c. What was the intent of separating this interval out from the Protection System Control Circuitry (Trip Circuits), which is 12 years for monitored components? Monitoring of the trip coils should be enough to justify a maximum interval of 12 years. As stated these requirements will put an undue financial and resource burden on utilities that have updated their protective relay systems with state-of –the art components and monitoring. In addition to the expense and effort of scheduling the additional maintenance, the additional validation of lockouts and auxiliary relays,

separate from the full function testing could lead to additional human errors and accidental tripping of circuits while testing. We believe there should be one stated activity “Protection System Control Circuitry and have a maximum interval of 12 years for monitored systems.
Yes
Yes
We commend the drafting team for recognizing the advantages of using monitored systems and a condition-based approach. This approach recognizes the benefits of using newer technologies and will give utilities added incentive to update their relay systems.
Yes
Yes
The Supplementary Reference is well written and helpful in explaining the drafting teams thought process.
Yes
The Frequently-asked Questions document is very well written and very helpful. The decision trees are a good addition.
Conflict: Potential conflict with PRC-023 as to which PRS systems are applicable per this standard. Comments:PRC-005-2 requires compliance for this standard for all non-radial systems over 100 kV; while, PRC-023-1 prescribes it as below: 1. Title: Transmission Relay Loadability 2. Number: PRC-023-1 3. Purpose: Protective relay settings shall not limit transmission loadability; not interfere with system operators’ ability to take remedial action to protect system reliability and; be set to reliably detect all fault conditions and protect the electrical network from these faults. 4. Applicability: 4.1. Transmission Owners with load-responsive phase protection systems as described in Attachment A, applied to facilities defined below: 4.1.1 Transmission lines operated at 200 kV and above. 4.1.2 Transmission lines operated at 100 kV to 200 kV as designated by the Planning Coordinator as critical to the reliability of the Bulk Electric System. 4.1.3 Transformers with low voltage terminals connected at 200 kV and above. 4.1.4 Transformers with low voltage terminals connected at 100 kV to 200 kV as designated by the Planning Coordinator as critical to the reliability of the Bulk Electric System. 4.2. Generator Owners with load-responsive phase protection systems as described in Attachment A, applied to facilities defined in 4.1.1 through 4.1.4. 4.3. Distribution Providers with load-responsive phase protection systems as described in Attachment A, applied according to facilities defined in 4.1.1 through 4.1.4., provided that those facilities have bi-directional flow capabilities. 4.4. Planning Coordinators. We believe Bulk Electric System (BES) owners’ resources would be better utilized by focusing on relay systems as defined in the above PRC-023-1 and this would still provide high level of reliability for the BES, since not all facilities operating between 100 – 200KV are critical to the BES. This would not preclude any utilities from applying this standard to other facilities operating at the lower voltage range. Why did the drafting team not use the application language sited in the “Protection System Maintenance - A NERC Technical Reference” which is similar to what is described above from PRC-023-1?
We commend the work done by the Standard Drafting team. In particular, the merging of previous standards PRC-005-0, PRC-008-0, PRC-011-0, and PRC-017-0 which will help with the efficient management of these standards.
Group
Western Area Power Administration
Brandy A. Dunn
Yes
Yes
Yes
Yes
Yes
No
No

Group
Operations and Maintenance
Robert Casey
Yes
Yes
Yes
Yes
Yes
No
No
No conflicts known.
None.
None.
Group
Electric Market Policy
Jalal Babik
Yes
We commend the SDT for developing such a clear and well documented first draft. In general, it provides a well reasoned and balanced view of Protection System Maintenance.
Yes
No
Recommend that all Level 1 three-month maintenance intervals be changed to a quarterly based system where only 4 inspections are required per year. Given a 3 month maximum interval, activities would need to be scheduled every 2 months, which would result in six inspections per year. Our experience of four inspections per year has proven to be successful.
No
Recommend that all Level 2 three-month maintenance intervals be changed to a quarterly based system where only 4 inspections are required per year. Given a 3 month maximum interval, activities would need to be scheduled every 2 months, which would result in six inspections per year. Our experience of four inspections per year has proven to be successful.
Yes
No
No
None
Regional Variance
It is our understanding that once Project 2009-17: “Interpretation of PRC-004-1 and PRC-005-1 for Y-W Electric and Tri-State” is approved, that the definition of a “Transmission Protection System” would be included within PRC-005-2 or included within the NERC Glossary of Terms. However, the specific protection that would be considered part of the “Transmission Protection System” would also depend on the regional definition of the BES. We suggest that the regions develop a supplement that provides further clarification on what constitutes a “Transmission Protection System” given the regional definition of the BES.
The “zero tolerance” structure proposed within this standard combined with the large volume and complexity of Protection System components requires a utilities processes and built-in grace periods to perform to perfection. Although this is a worthy goal for our industry, this can result in a large number of non-compliances for minor documentation issues or slightly missed

maintenance schedules on an insignificant percentage of relays. The processing of these non-compliances can be costly in terms of resources that could be better utilized to address other transmission reliability matters. To provide a better approach, we suggest an incremental carryover system be permitted that would allow up to 0.5 percent of the PRC-005 maintenance task to be carried over to the next period, provided they are random events (not repetitive). As an example, a small percentage of our Protective System Control Trip tests on a 6-year interval could be carried over into the next calendar year when a generator outage is rescheduled. With this provision, these few tests could be handled without risk of a generator trip and without a compliance consequence. These carryover tasks could be addressed through an action plan with a defined completion date, and could be documented through a regional web portal. There are many barriers to 100% completion at a zero tolerance level with this volume of tasks.

Group

Southern Company

Hugh Francis

Yes

No

Tables 1a and 1b require entities to verify the proper operation of voltage and current inputs to sensing devices on a 12 year interval. The Protection System Supplementary Reference (Draft 1), in section 15.2, describes several methods that may be used for such verification efforts. In order to perform this type of verification the circuit in question would need to be in operation. This verification introduces a possible unit trip due to the need to connect test equipment to live potential and current circuits at each relay, which has the potential to trip the circuit under test. This could result in the loss of critical transmission lines or generating units. The System Maintenance Supplementary Reference also allows saturation tests or circuit commissioning tests to satisfy this requirement; however, these types of tests require the circuit in question to be removed from service. For generating plants, removing the circuit from service requires that the station be shut down. We do not feel that the value obtained from this requirement is equal to the risk or maintenance burden associated with it. Such testing and verification should not be required periodically, but only if new instrument transformers, cabling or protective devices are installed or if the instrument transformers are replaced. Table 1b: Protection System Control Circuitry (Trip Coils and Auxiliary Relays) – Experience has shown that electrically operating partially monitored breaker trip coils, auxiliary relays, and lockout relays every 6 years is not warranted. This testing introduces risk from a human error perspective as well as from additional switching and clearances required. We recommend eliminating this maintenance requirement. Protection System Control Circuitry (Trip Circuits) (UFLS or UVLS Systems Only) - Table 1b includes the statement "Verification does not require actual tripping of circuit breakers or interrupting devices." This statement should be included in Table 1a. In Table 1a – Station DC Supply (that has as a component any type of battery), we recommend changing the maximum maintenance interval from 3 months to 6 months as described below Verify Proper Electrolyte Level – 3 Months The 3 months interval for verifying proper electrolyte level is excessive for current battery designs that are properly maintained. The interval in which the electrolyte must be replenished is affected by many factors. These include temperature, float voltage, grid material, age of the battery, flame arrester design, frequency of equalization, and electrolyte volume in the battery jar. Manufacturers are aware that their customers want to extend the interval in which their batteries require water and this has lead to jar designs that have a wide min-max band with a high volume of electrolyte to allow for extended watering intervals. Understanding all the factors and proper maintenance will extend watering intervals. A battery should go a year or more between watering intervals and some as many as 3 years. Being conservative the Southern Company Substation Maintenance Standards require that we check the electrolyte level twice yearly. Experience has shown this has worked well. We propose that the “3 Months” interval be changed to “6 months”. • Verify proper voltage of the station battery – 3 Months Being conservative, the Southern Company Substation Maintenance Standards require that we check the station battery voltage twice yearly. Experience has shown this has worked well. We propose that the “3 Months” interval be changed to “6 months”. • Verify that no dc supply grounds are present – 3 Months Being conservative, the Southern Company Substation Maintenance Standards require that we check for dc supply grounds twice yearly. Experience has shown this has worked well. We propose that the “3 Months” interval be changed to “6 months”. Measurement of Specific Gravity – 18 Months The measurement of specific gravity and temperature every 18 months is not necessary as a regular part of maintenance. Specific gravity can provide information as to the health of a cell; however, taking specific gravity readings is a messy process no matter how careful you are and will result in acid being dripped on top of the battery jars as the hydrometer is moved from cell to cell. Should a drop of acid end up on an external connection, it will result in corrosion and problems later. Voltage reading of cells can be substituted for specific gravity readings under normal conditions. Specific gravity is equal to the cell voltage minus 0.85. A cell with low voltage will have a low specific gravity. If cell voltage becomes a problem that can not be addressed through equalization then specific gravity readings are justified as a follow-up test. Since measurement of specific gravity could lead to

problems and reading cell voltage is a viable alternative, we propose that it be removed from the battery maintenance activities. Verify Cell to Cell and Terminal Connection Resistance – 18 Months Clarification is needed on the expected method for verifying cell to cell and terminal connection resistance. This could easily be interpreted as requiring the use of an ohmic value (impedance/conductive/resistance) test device. If this is the case then basically it eliminates the need for the activity to "Verify that the substation battery can perform as designed by performing a capacity test every 6-Calendar Years or performing an ohmic value test every 18 Months", because the practical thing to do is go ahead and perform the ohmic value test while you have your device connected to the battery. In table 1a and 1 b - Station dc supply (that has as a component Vented Lead-Acid batteries. Verify that the Substation Battery can Perform as Designed – 6 Calendar Years/18 Months Southern Company Transmission has approximately 570 batteries that are covered by this proposed standard. These batteries currently have ohmic value testing performed every "4 Years" as required by the Southern Company Substation Maintenance Standards. The "4 Years" interval has been utilized for over 10 years and has not experienced a failure of any of the 570 batteries to perform as designed Having to perform ohmic value testing on an "18 Months" interval will significantly increase our costs and manpower requirements with no anticipated improvement in reliability. We propose that the "18 Months" interval for ohmic value testing be changed to "4 Calendar Years". This proposal also applies to verifying cell to cell and terminal connection resistance if an ohmic value test device is required as discussed above. In table 1a and 1b – Station dc supply (that uses a battery and charger). Verify that the Battery Charger can Perform as Designed – 6 Calendar Years Clarification is needed on an acceptable method for verifying that the battery charger can perform as designed by testing that the charger will provide full rated current and will properly current limit, especially the part about "will properly current limit". On Table 1b – Station DC Supply (that has a component any type of battery) we recommend changing the maximum maintenance interval from 3 months to 6 months as described below • Verify Proper Electrolyte Level – 3 Months The 3 months interval for verifying proper electrolyte level is excessive for current battery designs that are properly maintained. The interval in which the electrolyte must be replenished is affected by many factors. These include temperature, float voltage, grid material, age of the battery, flame arrester design, frequency of equalization, and electrolyte volume in the battery jar. Manufacturers are aware that their customers want to extend the interval in which their batteries require water and this has lead to jar designs that have a wide min-max band with a high volume of electrolyte to allow for extended watering intervals. Understanding all the factors and proper maintenance will extend watering intervals. A battery should go a year or more between watering intervals and some as many as 3 years. Being conservative the Southern Company Substation Maintenance Standards require that we check the electrolyte level twice yearly. Experience has shown this has worked well. We propose that the "3 Months" interval be changed to "6 months". We recommend removing the "Detection and alarming of dc grounds" monitoring attribute. Note that this applies to every "Station dc supply" section where it is listed. Experience has shown that there have been no significant problems discovered via alarms that would not have been discovered by 6 month inspection cycles. We propose to add "verify no dc grounds are present" as a maintenance activity on a 6 months inspection cycle. Experience has shown that there have been no significant problems discovered via alarms that would not have been discovered by 6 month inspection cycles. Table 1a, p. 7, Station dc supply, 3 month interval: need to add 'unintentional" to the sentence "Verify that no dc supply grounds are present." because most dc systems have ground detection systems which place an intentional ground on the battery. "No grounds" is not practical and is unacceptable since most dc systems have some high resistance ground paths. Some criteria should be established to determine the acceptable ground resistance on a dc system. Table 1a, p. 8: For the vented, lead-acid battery, there is no basis for the 18 month activity option (internal ohmic value measurement) in place of the 6 year performance test. The activities for trip checks for Level 1A and Level 1B should be the same. Currently, they read: Level 1a: "Perform a complete functional trip test that includes all sections of the Protection System trip circuit, including all auxiliary contacts essential to proper functioning of the Protection System. " Level 1b: "Verify that each breaker trip coil, each auxiliary relay, and each lockout relay is electrically operated within this time interval." The Level 1a text is adequate for 1b also. Table 1c, p 16: Monitoring of single or parallel trip circuits is not practical where multiple normally open contacts are in series to trip. Monitoring of the trip coils is practical and useful. How would one monitor several normally open contacts which are in series to trip a breaker? Table 1c, p. 15, 16, 19: The use of "continuous" under "Maximum Maintenance Interval" in Table 1c should be changed to "N/A" and the Maintenance Activity should be "NONE". Verification of the various monitoring (automated notification) systems is not specified anywhere in the requirements. This, too, should be required.

No

The 3 month intervals specified for the trip coil monitoring and communication circuit testing are too frequent. Our experience is that trip coils rarely burn open and don't need to be checked this often. If no monitoring currently exists, manually checking the circuit (until a time where monitoring can be installed) may inadvertently cause a trip. This adds risk to the reliability. Thus, requiring the trip circuits to be tested every 3 months may reduce the reliability of the BES. Protection System Control Circuitry (Breaker Trip Coil Only) (Except for UFLS or UVLS) In order

to reduce the risk of reducing Bulk Electric System reliability a better time interval for testing un-monitored trip coils would be 12 months. This may need to be 24 months for Nuclear Generating units. Some allowance for a grace period (beyond the specified intervals) should be considered for all classifications. Outage schedules are known to change unexpectedly due to unforeseen circumstances. A grace period tolerance of +25% for specified maintenance intervals less than 12 months and of +1yr for those intervals specified as greater than 12 months is recommended. Typically at a nuclear plant a grace period is allowed by plant procedures. This grace period is defined as an additional 25 percent of the original schedule interval for the task. The grace period is provided as reasonable flexibility to allow for alignment with surveillance activities and equipment maintenance outages and to better manage the use of station resources. Some maintenance activities will require an outage to perform the work. Refueling outages are typically performed on an 18 month or 24 month refueling cycle. However, refueling outages do not always fall exactly on that interval. It is possible that the duration between one outage to the next may exceed 18 or 24 months. For activities that are required to be complete on a calendar year cycle this should not be an issue since the outages are normally scheduled several months prior to the end of the year. However, if the interval is a monthly interval there could be a problem with scheduling the maintenance such that it does not impact planned maintenance activities, surveillance requirements, and station resources. Tables 1a, 1b and 1c have several instances where inspection and testing of DC circuits or components has a specified interval of 18 months. At nuclear generating stations, such tests on station battery banks and associated chargers incur unacceptable risk if performed with the unit on line and a unit outage is required for this testing. A number of nuclear plants are on two-year shutdown cycles and we request that the 18 month intervals be changed to two (2) (calendar) year intervals to accommodate this. Protection System Control Circuitry (Breaker Trip Coil Only) (Except for UFLS or UVLS) – Based on past performance, a complete functional test trip every 6 years is not warranted. This complete functional test introduces additional risk to our maintenance program, not only from a human error perspective, but also from the additional frequency of switching and outages required. Our experience has shown that 12 years is an appropriate maximum time interval (rather than 6 years.)

No

Table 1b should allow self-monitored circuits that are not alarmed but are monitored and logged by personnel daily or more often. Many plants and substations have personnel that do in person checks of unmanned control rooms. This is the equivalent of “Protection System components whose alarms are automatically provided daily (or more frequently) to a location where action can be taken for alarmed failures.” For example, dc system ground potential lights and dc system volt meters exist on most control room bench boards or exist in the digital control systems at generating stations. These devices are monitored by operators in manned control rooms. On Table 1b, Protection System Control Circuitry (Trip Coils and Auxiliary Relays), the monitoring component calls for “Monitoring and alarming of continuity of trip coil(s).” Clarify that “trip coil(s)” excludes Breaker Failure Initiate relay coil(s). On Table 1b, Protection System Control Circuitry (Trip Coils and Auxiliary Relays) – Experience has shown that electrically operating fully monitored breaker trip coils, auxiliary relays, and lockout relays every 6 years is not warranted. This testing introduces risk from a human error perspective as well as from additional switching and clearances required. We recommend eliminating this maintenance requirement from Table 1b. On Table 1c, Protection System Control Circuitry (Trip Coils and Auxiliary Relays) – Experience has shown that electrically operating fully monitored breaker trip coils, auxiliary relays, and lockout relays every 6 years is not warranted. This testing introduces risk from a human error perspective as well as from additional switching and clearances required. We recommend changing this maximum maintenance interval to 12 years. Component monitoring attributes need to be defined for all components in table 1b and 1c. For example, the attributes for voltage and current sensing devices could be that "Voltage and current input circuits are monitored and alarmed". Based on past performance, the requirement to electrically operate trip coils, auxiliary relays, and lockout relays every 6 years in Table 1b is not warranted. We recommend complete functional testing including electrical operation of breaker trip coils, auxiliary trip relays, and lockout relays every 12 years in tables 1b and 1c.

Yes

Yes

Section 15.3 DC Control Circuitry: Although we agree with the premise that auxiliary trip relays and lock-out relays are similar in nature to EM relays and breakers, we believe that based on past performance, a complete functional test trip every 6 years is not warranted. This complete functional test introduces additional risk to our maintenance program not only from a human error perspective but also from the additional frequency of switching and outages required. Our experience has shown that 12 years is an appropriate maximum time interval (rather than 6 years.) The Protection System Maintenance Supplementary Reference (Draft 1), section 8.4, states that the intervals using the term “calendar” are allowed to be completed by the end of the applicable period, not necessarily exactly at the interval specified. The only intervals specified in the PRC-005-2 tables are “calendar years” and “months”. We believe that the “calendar”

description should be extended to the “months” designator also to also provide some maintenance flexibility (i.e. if an inspection were performed March 1st and was on a three month interval, it would not be required until the end of June). This section should remove the term “calendar” and use “months” and “years” with an appropriate explanation of the intent of the durations.

Yes

Part of the responses could be more correctly stated: Page 11E, “why is specific gravity testing required?” The specific gravity measurements do not reflect accurate state of charge for lead-calcium batteries. (Float current is a better parameter for this indication)

We presently utilize a UFLS system distributed across many transmission and distribution substations. Are the station batteries located in stations with no network transmission protection schemes (other than UFLS) subject to the requirements of PRC-005-2? This was not addressed in previous revisions. We presently utilize a UVLS system distributed across many transmission and distribution substations. Are the station batteries located in stations with no network transmission protection schemes (other than UVLS) subject to the requirements of PRC-005-2? In the applicability section, there is no exception for smaller units and those with very low capacity factors. Rather, those that “are part of the BES” are in the scope. We recommend that smaller units and low capacity factor units be exempt from the requirements of this standard or have extended maintenance intervals. Refer to the current SERC supplement for PRC-005-1. Section II.A. of the May 29, 2008: SERC Supplement Maintenance & Testing – Protection Systems (Transmission, Generation, UFLS, UVLS, & SPS) NERC Reliability Standards PRC-005-1, PRC-008, PRC-011, & PRC-017. The applicability section paragraph 4.2.4 should read “are installed” rather than “is installed”. Note 2 at the bottom of the table (1c) implies that one has to apply voltage and inject current into the microprocessor relay to perform trip checks. Is this the intent of the statement? If so, Note 2 should be revised to make clear the intention. We don’t think this is necessary with microprocessor relays since they monitor inputs Why is the Violation Severity Level Matrix not a part of this standard revision? In cases where a common dc system exists between a generator owner and transmission owner, who is the responsible entity? We appreciate the work that went into the implementation plan. We agree with the concept of phasing in mandatory compliance and the timing of the implemetation. Consider defining the Monitoring Levels once and reformatting the information contained within Tables 1a, 1b, and 1c to regroup the information by component type rather than by Monitor Level. When considering the various monitoring levels for the protection system components, each entity will consider each component type apart from the others when determining the Monitor Level to apply, so this reorganization will assist the end user to understand and apply the levels. See samples attached as a separate document:

Individual

Daniel J. Hansen

RRI Energy

Yes

No

It is recommended to change the wording of the Maintenance Activities to the activity itself, not the resolved state of the maintenance correctable issue (i.e. “For microprocessor relay, check for proper operation of the A/D converters” instead of “For microprocessor relays, verify proper functioning of the A/D converters”). The wording of the standard effectively sets the end date for the correction of maintenance identified issues. In other words, maintenance has not taken place until all maintenance correctible issues have been completely resolved. The wording in the standard have set non-compliance “traps” for those performing the maintenance but have not completed correctable issues for legitimate reasons which may not be allowed by the no-exception approach of the standard. For example, rewording of the Battery Supply 3 month activities are recommended as follows: “Check for proper electrolyte level. Check for proper voltage. Check for dc supply grounds.” As inspection activities, any issue not corrected during the interval should become a maintenance correctible issue. For generating stations, the judgments to locate and remove a ground are based upon criteria not accounted for in the requirements of this standard. An activity to locate and clear a ground requires the judgment of station maintenance and operational management depending upon the operating conditions of the unit and the level of the ground (solid or high-resistance). Inspections (3 month requirement activities) although good practices, should not be standard requirements. The practice of verifying the continuity of breaker trip circuits does not belong as an auditable NERC standard requirement; it becomes more of a documentation requirement rather than a reliability improvement. Otherwise, it will ultimately require the expending of resources in an unproductive manner primarily on the development, storage, and production of excessive records for compliance purposes. The elimination of this requirement is recommended. For Table 1a –

Protection System Control Circuitry - rewording is suggested as follows: “Perform functional trip tests of Protection System trip circuits, including auxiliary relays essential to the proper functioning of the Protection System.” The requirement, as presently worded “that includes all sections of the Protection System,” is overly prescriptive and will create non-compliances for miniscule oversights, given the very large scope of components in protection systems that are spread out far and wide in a system. The requirement opens the door, allowing the compliance process itself to be punitive in nature. When pursued to the extreme under audit conditions, this requirement will be very difficult to demonstrate on a large scale. For Table 1a – Station dc supply: The ability of a battery charger to correctly supply equalize voltage to a battery has no direct correlation to reliability of the BES and does not belong in this standard. The objective is that the battery get an equalize charge when it needs it, not the maintenance of the equalize function of a battery charger. How the battery gets equalized is not important to this standard, especially since a battery and the equalize source are usually disconnected from the protection system during the process. For Table 1a – Station dc supply: The use of the term “in tolerance,” for the measurement of specific gravity, is an inconsistency in stating the standard requirements. There are multiple activities that will necessitate the measurement of a quantity “in tolerance” whether it is battery charger output, individual cell voltages, connection resistances, or internal ohmic values. The suggested rewording is as follows: “Measure the specific gravity and temperature of each cell.” For Table 1a – Station dc supply: Referring to the requirement to “verify that the station battery can perform as designed…” very little of a generating station battery sizing is related to BES protection. Verification of a generating station to design conditions is outside the scope of BES protection and does not belong in this standard. Nearly all protection system operations operate without reliance upon the battery to do so, and the separation of the generating unit from the BES will take place within cycles, if called upon to do so. The remainder of the battery duty cycle is outside the scope of BES protection.

No

The intervals need to be defined on a calendar quarters or calendar years, especially for intervals listed as 3 months. The demonstration of maintenance on rolling three-month intervals will be an onerous record keeping task, particularly when relying upon planning and tracking software that scheduled recurring tasks on the same day of an interval. Given the magnitude of the number of trip circuits, the requirements set an un-acceptable trap of non-compliance from a record keeping perspective. The resources required to keep and maintain flawless records are too much to justify the intervals. A non-compliance is the result if the breakers that happen to be in an open state when the officially “documented” inspection is recorded and is missed by accidental oversight on follow-up. If the requirement remains, it should be waived for any breaker that is operated during the defined interval.

Yes

Yes

No

Yes

Reverse power relays do not belong in the list of devices within the scope of this standard; reverse power is not used for generator protection or protection of a BES element. Aside from the protection of reverse power for other non-BES equipment, a generator can operate continuously as a generator, synchronous condenser, or a synchronous motor. Reverse power relays (or reverse power elements in multi-function relays) is commonly used as a control function for automatic shut-down purposes, which is not a protective function. Other reverse power protection, with longer time delays, is provided for turbine protection, which is not within the scope of the NERC Standards.

The standard was written to implement generally accepted practices, but has developed requirements that are overly prescriptive relative to what will be required to demonstration compliance. The standard should not assume the need to write all aspects of a maintenance program into the standard or that maintenance programs will only consist of the standard requirements. Protection systems of the BES have and will continue to perform very reliably with the basic elements of a maintenance program without the need to divert resources for the development of excessive documentation to demonstrate compliance. PRC-005-1 is the most violated standard in the industry; not because of the lack of maintenance to protection systems, but because the documentation requirements of the standard, given the large magnitude of components that fall within the scope of the standard. This standard significantly increases the administrative burden for additional documentation, without corresponding improvements to the reliability of the BES. Recommend rewording A.4.2.5.1 as follows: “Generator Protection system components that trip the generator circuit breakers to separate and isolate the generator from

the BES either directly in the breaker trip coil circuit or through interposing lockout or auxiliary tripping relays." This document should not expand the compliance scope beyond the definition of the BES. The generator protection systems that "trip the generator" also perform additional control functions that extend beyond the electrical isolation of the generating unit from the BES. These additional circuits do not protect the BES and do not belong in the scope of this document. Recommend rewording A.4.2.5.4 as follows: "Protection systems for generator-connected station service transformers that trip the generator circuit breakers to separate and isolate the generator from the BES." This document should not expand the compliance scope beyond the definition of the BES. Related protection circuits of the transformer not involved with the electrical isolation of the generating unit from the BES does not belong in the scope of this document. Recommend rewording A.4.2.5.5 as follows: "Protection systems for BES elements connecting to the station service transformers of generating stations." This document should not expand the compliance scope beyond the definition of the BES. The requirement incorporates radial feeds (with dedicated breakers) into the scope of the standard that are not necessarily a part of the BES as defined by some RRO's. Station service transformers are not necessarily required for generating unit operation. In some cases there are redundant sources for startup or back-up power. Protection of these transformers does not belong in the scope of the standard if they are not a part of the BES. The suggested rewording of R1.2 is as follows: "Identify whether each Protection System component is addressed through time-based, condition-based, performance-based, or a combination of these maintenance methods." The requirement for the registered entity to list the interval of maintenance does not belong in the standard, especially since the maximum intervals are listed in the standard tables. The registered entity may have internal documents that intentionally target a shorter duration than the maximum interval of Table 1a. The failure to meeting those internally established targets can be a violation of the standard by the wording of this requirement. Allow R4 of the standard to identify the maximum allowable intervals. In R4, the requirement for "identification of the resolution of all maintenance correctible issues" should be separated from the maintenance intervals; which define the maximum intervals of maintenance activities. The requirement should be eliminated to remove the overly prescriptive requirements of auditable documentation. If retained, a rewording of the requirement is as follows: "Each Transmission Owner, Generator Owner, and Distribution Provider shall identify the resolution of all issues identified and not corrected at the time the maintenance is initiated and the protected element is returned to service." The documented resolution of maintenance correctible issues (if retained) should apply only to activities that are unresolved and incomplete during the normal maintenance process. The standard should not micromanage the documentation process by creating requirements for excessive auditable records needed to demonstrate compliance of routine maintenance activities. In R4, the requirements for Generator Owners which establish the durations of maximum allowable intervals should be separated from the Transmission Owners, even if the intervals are the same. The reason is to allow for the assignment of different Violation Risk Factors. The Violation Risk Factor for the application of a 20 MVA generating unit with an operating capacity factor of less than 5%, and connected to a 138 kV system, should not be the same as those applied to a 500kV transmission line. The violation risks factors for these two applications are significantly different, and the ability to recognize this is not permitted by the standard presently. Similarly, the criteria used for the sizing of station batteries for a large generating station is very different than those used for transmission facilities. Very little of the generating station battery sizing is related to BES protection, and nearly all generator protection system operations occur without reliance upon the battery. Without NERC Standard requirements, Generator Owners have their own natural incentives to maintain batteries for the protection of the turbine generator bearings on the loss of AC power. With the most basic requirements of an inspection and maintenance program, there is an extremely high degree of reliability given the typical design of DC systems within a generating station, even without documented compliance to a rigid set of standards. With very basic, elementary maintenance (documented or not), the statistical probability for the random and simultaneous failure of multiple battery cells to disable the protection system of a generating station for the milliseconds of time required to separate a generating unit from the BES is insignificant (well in excess of 1 billion to 1 across an entire calendar quarter). Violation risk factors and the resulting penalties for non-compliance need to be realistic.

Group

Transmission Owner

Silvia Parada-Mitchell

Yes

No

Tables 1a, 1b & 1c should offer as an alternative, measuring battery float voltages and float currents in lieu of measuring specific gravities as described in Annex A4 of IEEE Std 450-2002. b. Inspection of CVT gaps, MOVs and gas tubes should be added to the communications equipment time based maintenance tables. Failure of the CVT protective devices may cause failure of the Protection System. c. Maintenance Activities for UVLS or UFLS station dc supplies shows "Verify proper voltage of dc supply". Does this imply that, except for voltage readings of the dc supply,

distribution battery banks are not maintained? d. Why does the Maintenance Activities for UVLS or UFLS relays state that verification does not require actual tripping of circuit breakers? e. Please clarify the Maintenance Activities for Voltage and Current Sensing Devices. Must voltage, current and their respective phase angles be measured at each discrete electromechanical relay?

No

i) Protective relays, ii) Protection Control Circuitry (Trip Circuits) and iii) Protection System Communications Equipment and Channels should be changed from 6 calendar years to 8 calendar years. Based on FPL's experience and Reliability Centered Maintenance (RCM) program, FPL has established an 8 year program and has found that an aggressive 6 year program would not substantially increase the effectiveness of a preventative maintenance program. b. Battery visuals should be changed from 3 months to 6 months. Electrolyte levels of today's lead-calcium batteries are relatively stable for a 6 month period compared to lead-antimony batteries used in the past. c. The maximum maintenance interval for communications equipment should be changed from 3 months to 12 months. Based on FPL's experience and RCM program, FPL has established a 12 month program that is effective.

Yes

Yes

No

Yes

An alternative to measuring battery specific gravity is to measure float voltage and float current as described in Annex A4 of IEEE Std 450-2002.

Protection System Maintenance Program (PSMP) The PSMP definition would be better defined if the first sentence was changed to "An ongoing program by which Protection System components are kept in working order and where malfunctioning components are restored to working order." b. Please clarify what is meant by "relevant" under the definition of Upkeep. Should "relevant" be changed to "necessary"? c. The definition of Restoration would also be more explicit if changed to "The actions to return malfunctioning components back to working order by calibration, repair or replacement. d. Please clarify the definition of Restoration. For example, if a direct transfer trip system has dual channels for extra security even though only one channel is required to protect the reliability of the BES and one channel fails, must both be restored to be compliant? e. Protection System (modification) "Voltage and current sensing inputs to protective relays" should be changed to "voltage and current sensors for protective relays." Voltage and current sensors are components that produce voltage and current inputs to protective relays. f. "Auxiliary relays" should be changed to "auxiliary tripping relays" throughout PRC-005-2, FAQ and the Draft Supplementary Reference. g. The word "proper" should be removed from the standard. It is ambiguous and should be replaced with a word or words that are clear and concise.

Individual

Greg Mason

Dynegy

Yes

No

Table 1a requires entities to "verify the continuity of of the breaker trip circuit including trip coil..." The term "verify" needs clarification. For example, we beieve verifying red and green" lights during routine inspection should be sufficient. On the other hand, actual testing is not feasible and is risky to reliability.

No

The 3 month interval in Table 1a for verification of the continuity of the breaker trip circuit is only feasible if this verification can be done by inspection versus testing (see Response to Question 2).

Yes

Yes

Yes

Suggest including operational verification (i.e. analysis of protection system operation after a system event) as an acceptable method of verification.

No

1. The proposed definition of Protection System needs further clarification. Suggest changing wording around DC supply to read as follows: "..and DC control circuitry associated with protective devices from the station DC supply". 2. Suggest revising Section 4.2 to separate time based program as its own item under R4. 3. Change title on Table 1a to clarify level 1 monitoring as time based.

Group

ITC Holdings

Michael Ayotte

Yes

No

• (FAQ 3C) What is the technical justification for omitting insulation testing of the wiring for DC control, potential and current circuits between the station-yard equipment and the relay schemes? We feel this wiring is susceptible to transients which, over time, may compromise the insulation, and therefore should be tested. • Table 1a (Page 6) Improve wording. Suggestion: “Verify proper functioning of the current and voltage circuits from the voltage and current sensing devices to the protective relay inputs” • On Page 6: The red light monitors trip circuit not only trip coil. With only one circuit going to three parallel single-pole trip coils a red light will not detect a single open trip coil. Is a station inspection that verifies the red light is “on” an acceptable activity? • On Page 9: The 3 month communications maintenance activities should say that the channel needs to be checked. For example: initiate a manual checkback test of the carrier system. • On Page 10: Not clear on level 2 monitoring attributes for protective relay component description. As written it notes two separate requirements which are ambiguous. We assume that all monitoring noted is required (internal self diagnosis and waveform sampling) • On Page7: The standard should note that battery testing must include all batteries that are used in protective relay systems (for example pilot wire batteries).

No

• Does the standard require that time or condition based maintenance programs monitor countable events to identify significant problems in particular relay segments, and then adjust the maintenance interval accordingly? • On page 6: Please clarify the use of “Calendar Year” Our understanding is that if a relay is maintained on August 31, 2003 on a 6 year interval, it will not be overdue until January 1, 2010. Is this correct? • On Page 7: What is the basis for 18 months? We believe 2 calendar years would be more appropriate. • On Pages 6,10: What is the basis of the 6 calendar year interval for functional trip tests? We request that this be changed to a 10 calendar year interval. We follow a 10 calendar year interval that has proven to be satisfactory. Decreasing the interval to 6 calendar years will result in a major increase in our maintenance expenses without a corresponding increase in reliability. • On Page 9: If it is being verified ok every 3 months, what is the basis of the 6 calendar year interval for Communication equipment? ITC communications systems are partially monitored and therefore required to perform this testing every 12 years. However, ITC would like to know the basis of the 6 year interval for informational purposes. • On pages 6, 8, 11, 13, 14 and 19: The maximum maintenance interval “(when the associated UVLS or UFLS system is maintained)” should be shown as the actual “6 Calendar Years”. • On Page 1 of Attachment A: Please provide an example in the reference of the proper way of adjusting the interval based on test results. • On Pages 7, 8, 12: It is our understanding that adequate maintenance can be achieved by performing either one of the two maintenance activities in cases where there is an “or”, is that correct? • On Page 14: For the bottom two rows on page 14 we believe there is a typo and it should read “Level 2” not “Level 1”. • On Page 13: Do powerline carrier schemes that provide a remote alarm if a daily checkback test fails, meet level 2 monitoring requirements? • In Table 1: What is the basis for the 6 year interval for the battery systems? This test would be an additional test for ITC. We would prefer to perform this additional test with the relay periodic maintenance on a 10 year interval.

Yes

• We agree with the approach. We have several issues with the details of Maintenance Issues, Interval and Monitoring Attributes. See previous comments for Questions 2 and 3.

No

• Appendix A fixes a 4% level of “countable events”. Is this number the industry average for countable events? Has the industry average actually been determined? The basis for the 4% requirement noted in Paragraph 5 of Appendix A should be included in the reference document. Also a sample calculation for adjusting the interval is needed to clarify the requirement.

Yes

• Will clarifications in the Reference Document be enforceable with the standard? For example

page 11 of the reference document notes “Voltage & Current Sensing Device circuit input connections to the protection system relays can be verified by comparison of known values of other sources on live circuits or by using test currents and voltages on equipment out of service for maintenance.” Can a maintenance program be confidently established using this or other testing methods included in the reference document? • A condensed definition of “Condition Based Maintenance” as described in Section 6 of the Reference document should be included in the standard document itself.

Yes

• FAQ page 6 question 3C should be clarified in the standard document itself. What is the technical justification for omitting insulation testing of the wiring for DC control, potential and current circuits between the station-yard equipment and the relay schemes? We feel this wiring is susceptible to transients which, over time, may compromise the insulation, and therefore should be tested. • FAQ page 17 question 2A the standard should define when the first maintenance activity is to be performed. We include our maintenance activities during commissioning, and set the next maintenance due date based on the testing interval. • Will clarifications in the FAQs be enforceable with the standard? Can a maintenance program be confidently established using this or other answers included in the FAQ’s?

Comments: We are not aware of any conflicts.

Comment: We are not aware of any regional variance or business practice that should be considered with this project.

In the Definitions of Terms, the Protection System (modification) should include control circuits up to and including the trip coil of ground switches used in protection schemes. Footnote 2 (Maintenance correctable issue) should be included in the Definition of Terms in the body of the standard.

Individual

Robert Waugh

Ohio Valley Electric Corp.

Yes

No

In general, all maintenance activities that are verifications of proper function imply that problems found must be resolved within the maximum interval. For some activities, that is an unreasonable expectation. A temporary resolution may reliably correct an adverse situation but may not address the original verification requirement within the maximum interval. Routine substation inspections should not fall under NERC standards. The documentation for quarterly inspections would be oppresive. It is unreasonable to require there to be no DC grounds. All DC grounds do not rise to the level of a reliability concern. In some cases, attempting to resolve a relatively minor DC problem may rise to the level of negatively affecting reliability. The value of capacity testing battery banks and chargers in the context of a protection system reliability standard is questionable.

No

The documentation requirements for the inspection activities with three month intervals is oppressive and should not be a part of the protection system maintenance standard.

R1.2 seems to require owners to establish there own intervals and basis. Compliance with these requirements should be based on the intervals that are in tables 1a, 1b and 1c. R4 implies that all maintenance correctible issues must be resolved within the Maintenance Activity Intervals. A diligent effort to restore proper function of a system should not be penalized if it does not fall within the prescribed maintenance interval.

Individual

Brent Ingebrigtson

E.ON U.S.

No

Capacity or AC impedance only needs to be done to determine service life and therefore periodic testing of station DC supply does not seem necessary or prudent. If a company checks overall battery bank voltages quarterly then periodic testing of the battery bank charger should not be required.

No

Generally, E.ON U.S. requests that the SDT provide the basis for the proposed changes in maintenance time lines. E ON U.S.'s existing maintenance intervals are based on actual operating experience. Not having been provided with the basis for the proposed intervals, the time lines appear arbitrary. E.ON U.S. currently has an 8-year interval for combustion turbines vs. the 6-year interval provided here. The E.ON U.S. interval is based on the Company's experience with this equipment. E.ON U.S. suggests that the SDT provide some consideration to individual entities' historic practices. It is difficult to track "18 months". Maintenance intervals should be in expressed in number of years. E ON U.S. also does not understand the basis for the 3 months maintenance schedule on breaker trip coils. Typically, the circuit breaker closed indication is wired through the breaker trip coil. Thus there could not be a breaker closed indication without a good breaker trip coil. So, this test should be considered continuous monitoring which may not even require documentation except in case of failure.

Yes

No

E.ON U.S. recommends keeping with time-based intervals (and the improvement thereof) and staying clear of condition-based performance for the generating stations. But that is not meant to preclude other companies from doing condition-based, if they so prefer.

Yes

With reference to Section 8.1., under additional notes is the following bullet: 5. Aggregated small entities will naturally distribute the testing of the population of UFLS/UVLS systems and large entities will usually maintain a portion of these systems in any given year. Additionally, if relatively small quantities of such systems do not perform properly, it will not affect the integrity of the overall program. This implies that incorrect performance of a "relatively small quantity" of UFLS relays is acceptable but with the understanding that it is not optimal. E.ON U.S. agrees with this statement in principle, in that the UFLS program is spread out across the system, and there is not a one to one performance expectation as there is with a transmission line or generation protection system. This calls into question the required intervals for testing of these types of relays, and the performance expectations in a PBM program. Given the number of relays spread out across the distribution system, the testing requirements of UFLS relays require longer testing intervals than other bulk transmission system components. 8.2 Is this requirement expected to be retroactive? That is, if the previous retention policy was followed to the letter, an entity could be fully in compliance based on the previous standard, but not be in compliance if PRC-005-2 were retroactive. 8.3 And 8.4 This discussion explains how time based maintenance intervals were determined. The conclusion is based upon surveys of SPCTF members and their existing practices, and seemed to arrive at a maintenance interval based upon a simple average weighed by the size of the reporting utility. No consideration appears to have been given to utilities who have successfully operated with longer test and calibration intervals. In section 5 of the Supplementary Reference it is stated that "excessive maintenance can actually decrease the reliability of the component or system." With that in mind, some of the intervals defined in the table seem too aggressive. With the proposed PRC-005-2, the Drafting Team has effectively shortened the recommendation for UFLS relays from 10 years to 6 years, with reference to the recommendations of the Protection System Maintenance Technical Reference. E.ON U.S. believes that this is inconsistent with previous comments in Section 8.1, bullet 5 of the notes. Consistent with the comments above and based on E ON U.S.'s internal testing, calibration and verification experience, E.ON U.S. recommends maintenance on UFLS relays that comprise a protection scheme distributed over the power system to be no less than 10 years for Level 1 monitoring and no less than 15 years for Level 2 monitoring. For a PBM program, require the number of countable events within a segment to be no more than 10%, not 4% as proposed.

No

E.ON U.S. disagrees with commissioning tests not being considered as a baseline for subsequent maintenance activities. Commissioning tests should be counted as the initial testing in the scheme of a maintenance program

Recently, NERC made an interpretation on PRC-005-1 which stated that battery chargers were not to be included as part of the standard. This version of the standard seems to be in direct conflict with that interpretation, and for the reasons stated above E.ON U.S. recommends that battery chargers not be included in the standard. E.ON U.S. believes that capacity or AC impedance only needs to be done to determine service life, and therefore a periodic testing of station DC supply does not seem necessary or prudent. Regarding the "Retention of Records", retaining records of the latest test seems adequate. E.ON U.S. does not understand the point of retaining records for the past two test results. This is particularly true for equipment for which there are relatively long testing intervals, for example, 12 years. Retaining result documents from 24 years ago seems unnecessary and impractical. With regard to NERC's PRC-005-2

Supplementary Reference Section 2.4 on Applicable Relays, E.ON U.S. offers the following comments: 1. This section extends the applicable relay coverage to IEEE type # 86 and IEEE type # 94. Some utilities define their turbine trip relay as an IEEE type #94. E.ON U.S. interprets that the NERC scope of applicable relays is that the turbine trip relays would be excluded; however, it would further clarify this exclusion if it were mentioned as an example in the last sentence. 2. The Tables in proposed Standard PRC-005-2 require additional clarity. E.ON U.S. suggests renaming tables to 1, 2 and 3 to match Level 1, 2 and 3 monitoring. The wording and format of text is not consistent between tables. 3. The fields in the tables are incoherent. E.ON U.S.' interpretation is that intervals and activities for UFLS and UVLS are different than other relay systems and components, but this is unclear. E.ON U.S. believes a separate table or sections for UFLS and UVLS would provide more clarity. In section 7 of the Supplementary Reference the SDT refers to the Bulk Power System instead of the Bulk Electric System. These are not interchangeable and the SDT needs to explain the need to use the term in this case. The phrase "support from protection equipment manufacturers" is used several times in the technical reference (Section 8 and Section 13) yet there is no manufacturer represented on the SDT. Rather than developing one size fits all requirements applicable to all equipment, E.ON U.S. suggests that the SDT pursue comments from manufacturers to obtain recommendations on what they believe is required to maintain and test their equipment.
Individual
Danny Ee
Austin Energy
Yes
No
See item # 10 Comments
No
See item # 10 Comments
Yes
No
See item # 10 Comments
Yes
Yes
Austin Energy is meticulous in adhering to the current maintenance standard and is convinced that its current maintenance and documentation program is adequate to maintain its reliable electric power system. Austin Energy appreciates the good intentions of the SDT but believes that the approach taken increases complexities to the maintenance process, introduces unwarranted workload in excessive documentation, is inflexible towards system configuration and experience, and is over prescriptive in nature. The approach also fails to distinguish the harmful effects of over-maintenance, increasing reliability risk due to human error and ultimately affecting the overall performance and reliability of the system. Another concerning issue is the addition of the breaker trip coil to the protection system definition. Our position is that the trip coil should be part of the breaker. The protection system would be considered operating correctly if it provided the output signal for the trip coil when expected. Hence the trip coil should be excluded from the new protection system definition. Performance based maintenance as specified in the attachment is extremely difficult and cumbersome to navigate. The intricate requirements are difficult to comprehend and will entrap entities making a good faith effort to comply. We believe this approach may become burdened with undesirable consequences. Last but not least, Austin Energy believes that under-frequency load shedding (UFLS) and under-voltage load shedding (UVLS) systems should not be included in the scope of this new proposal. UFLS and UVLS are a wholly different entity as compared to the Bulk Electric System (BES). Rigidity imposed onto distribution system equipment, operating schemes and performance is uncalled for and overreaching.
Individual
John Alberts
Wolverine Power Supply Cooperative, Inc.
No
Wolverine Power has concern about the level of "prescription" in this standard draft. The intent of the standards is to define what, not how. This draft gets unnecessarily preseciptive in our opinion, particularly in the table

No
The tables are too prescriptive - The standards should state what, not how.
No
See question 2 response
No
See question 2 response
No
See question 2 response
No
No
Individual
Willy Haffecke
City Utilities of Springfield, MO
Yes
No
CU has concern over the battery charger testing requirements. Per the charger manufacturers recommendations there is no reason to test the chargers as proposed in PRC-005-2. It is their opinion that the chargers are self diagnostic and do not require these tests (full load current and current limiting tests). The charger O&M manuals do not even provide instructions for such tests as optional. Therefore, CU takes exception to this requirement and suggests that battery chargers be maintained and tested in accordance with manufacturer's recommendations. Additionally, CU is concerned with the wording in Table 1a concerning Protection system communication equipment and channels. We are unsure what the maintenance activity actually means. If this is an unmonitored system, how can you verify the condition of the communication system? Is the Standard referring to local monitoring such as annunciators? Please provide clarification.
No
CU agrees in general with many of the maximum maintenance intervals. However, we disagree with the necessity to verify the continuity of trip coils every 3 months. We would be interested to know what basis the committee used to arrive at all intervals. Furthermore, it is our opinion that even if a component is unmonitored, the interval should not surpass the manufacturer's recommendations.
Yes
CU agrees with the approach, but, may not agree with the exact wording in the tables. For instance, the use of the word "every" in table 1c in "Protection System components in which every function required for correct operation of that component is continuously monitored and verified" may be overstating the level of monitoring that would realistically enable a Protection System to use table 1c.
No
It appears that Attachment A was written for large utilities. Some allocation needs to be made for utilities with smaller numbers of components.
No
No
CU is unaware of any conflicts.
CU is not aware of a need for a regional variance.
As proposed, this Standard is very long and complex. Additionally,in requirement R1, bullet 1.1 ought to state "For each component used in each Protection System, include all "applicable" maintenance activities specified in Tables 1a, 1b and 1c". For instance, if every component has continuous monitoring, why should the program include 1a and 1b?
Group
Pepco Holdings Inc. - Affiliates
Richard Kafka
Yes

No

Tables 1a, 1b and 1c all require measuring specific gravity and temperature of battery cells. This invasive test provides no information regarding battery health that cannot be obtained from cell impedance testing. Recommend requiring cell impedance OR specific gravity & cell temperature testing. Tables 1a, 1b and 1c all require testing the battery charger every 6 years to verify that it can provide full rated current and will properly current limit. In order to perform this (unnecessary) test the battery would be subjected to a deep discharge. Whatever benefits may be derived from this test are dwarfed by the negative effect on the battery. Recommend removing this requirement.

No

Table 1a requires verification of the continuity of the breaker trip circuit every three months in the absence of a trip coil monitor. Recommend maintenance interval to match that for other protection system control circuitry (6 years).

No

Monitoring and alarming of the station dc supply and detection and alarming of dc grounds are required to qualify for Level 2 monitoring of battery / dc systems. While the presence of dc ground may affect protection and control operations, they do not affect any of the systems for which dc ground alarming is listed as a monitoring criteria. Recommend removing this criterion from the battery & dc system monitoring criteria and adding it as a maintenance activity, with frequency of testing based on presence of detection / alarming.

Yes

No

No

Item 3.B. (Page 6) claims that a small measurable quantity in 3I0 and 3V0 inputs to relays -may- be evidence that the circuit is performing properly. This statement is weak at best, and incorrect at worst. A balanced transmission system may exhibit 3I0 and 3V0 quantities that are not measurable, and those that are measurable cannot be compared to other readings, since CT/PT error often exceeds system imbalance. Since these inputs are verified at commissioning, recommend that maintenance verification require ensuring that phase quantities are as expected and that 3IO and 3VO quantities appear equal to or close to 0.

Individual

Charles J. Jensen

JEA

Yes

Generally agree; however, some suggestions for possible changes: 1) change "associated communication systems necessary for correct operation of protective devices" to "protective relays", 2) add a PSMP glossary defintion for an acceptable type of monitored alarm, either to the proposed "PSMP monitor" or another definition for "PSMP monitored and alarmed." The SDT did a good job of making the overall Protection System definition clearer.

Yes

If a communication system relies on a battery system independent of the "station battery", is this communication system battery under the same requirements as the "station battery"?

Yes

Is it possible that for coil monitored equipment, such as LOR coils, that they were left out, of this Table allowing for a longer maintenance interval. Certainly LOR continuous coil monitoring with alarming to a 24 hour 7 day a week manned location, with emergency dispatch, would allow for a longer maintenance interval for continuously monitored LORs. Suggestion here might be alignment with continuously self-tested, monitored and alarmed microprocessor relays at 12 years.

Yes

Approach appears to be well explained. Only one are of concern and that would be delaying the advancement of replacement of EM relay systems with microprocessor, if the PBM population were to decrease below the 60, resulting in not meeting the sample minimum population criteria. Falling below this 60 population sample minimum, might result in an immediate compliance violation.

No

Yes

The FAQ is a well written document and the team should take pride in its clarity and informative content. One area that would be good to have further clarification, is if the SDT could provide a current industry product or example of the "software latches or control algorithms, including trip logic processing implemented as programming components, such as a microprocessor relay that takes the place of (conventional) discrete componenet auxilary relays or lockout relays that do not have to be routinely tested." Is this a microprocessor lockout relay (that does not require trip testing?)

Regional Variance

Regional variances in the Bulk Electric System defintion as applied across regions allows for PSMP to vary possibly even for the same region crossing tie lines. Also, accepted maintenance practices by one region vary from accepted maintenance practices from another region. In the case of lower kV non-redundant bus lockout protection systems, one region may allow for the prtoection system to be taken out of service to perform maintenance, while another region may specifically prohibit this practice (don't leave energized equipment protected by delayed clearing, etc.)

Implementation Plan - Stongly encourage keeping the implementation plan and allow for an extension of the implementation plan for the time required to fund, design, procure, install and commission redundant protection systems for current non-redundant lockout systems at the lower kV levels of the BES. Our present and past performance of LOR and auxilary relays will support a PBM/CBM program that allows for a much longer time than the six years proposed for EM LOR trip testing. To use a TBM for LORs of six years, may in fact, lower the reliability of the BES due to the complete outages required, along with the detailed procedures that must be created and rigourously followed to perform these tests without subsequent load loss on the BES.

Group

Detroit Edison

David A Szulczewski

Yes

No

Suggest that under “Maintenance Activities” for “Protective Relays” add the following: Verify proper functioning of the microprocessor relay external logic inputs (carrier block, etc.) We recommend not requiring specific gravity and temperature readings for batteries. We have found from experience that the time and difficulty to obtain specific gravity readings are not justified. We have found that utilizing visual inspections, voltage and internal/intercell resistance readings gives a good picture of the health of the battery. We use specific gravity readings on occasion for troubleshooting purposes. It is recommended that the sections about verifying battery charger performance be eliminated if there are low voltage alarms that go to a monitored location. We recommend changing the maximum maintenance interval for DC supplies with no battery from 18 months to 3 years. If there is no battery, you do not have the risk of failure of chemical processes and such that would require an interval as short as 18 months.

No

What is the basis for the three month interval for verifying breaker trip coil continuity? Will the investment required to facilitate this really result in the presumed expected increased reliability?

No

Table 1b indicates that this (level 2) includes all elements of level 1 monitoring. However, level 1 is constantly referred to as unmonitored in other places.

Yes

No

Yes

Example #1 on page 21 states “A vented lead-acid battery with low voltage alarm connected to SCADA. (level 2)”. However, Table 1b indicates that detection and alarming of dc grounds is also required for level 2.

Suggest that the term “alarmed failures” in the table headings be changed to “alarmed abnormalities” to better indicate that the monitored parameter may be in an abnormal state or out of range but not necessarily failed. Does “system-connected” station service transformers

refer to transformers connected to the BES or transformers connected to a system at any voltage level? Is the intent of R1.1.2 that each Protection System component (specific relay at specific location) be listed individually with its associated maintenance method and interval or can the general component category be listed as such? Regarding R4, further clarification would be helpful in understanding the intent of the term “resolution of all maintenance correctible issues” as it applies to R4.1 and R4.2. Is it intended that “maintenance correctible issues” be completed within the interval? It is recommended that each line in the tables be given a number or letter designation to make reference to that row easier.

Individual

Greg Rowland

Duke Energy

Yes

No

Our comments are limited to activities in Table 1a. • Protective Relays – okay • Voltage and Current Sensing Devices Inputs to Protective Relays – Proper functioning should be verified at commissioning, and then anytime thereafter if changes are made in a PT or CT circuit. Additional periodic checks may be warranted as suggested in Table 1A, however no additional checking should be required where circuit configuration will inherently detect problems with a PT or CT. For example, PTs & CTs that are monitored through EMS or microprocessor relays will be alarmed when they are out of specification. • Protection System Control Circuitry (Breaker Trip Coil Only) (except for UFLS or UVLS) – Need more clarity on exactly what this activity is expected to include. In some cases we have a red light on a control panel monitoring the circuit path to the trip coil. In locations where there is not a red light, verifying the continuity of the breaker trip circuit including the trip coil will be complicated. There is no straightforward way to do it without potentially impacting reliability, and we would have to consider modifying these installations to include a red light. • Protection System Control Circuitry (Trip Circuits) (except for UFLS or UVLS) – Need more clarity on exactly what the activity is. We believe testing one output all the way to the coil is sufficient to prove the trip path. The activity states that “all auxiliary contacts” must be tested. We propose that all protection control circuitry should be tested at initial commissioning, and then again if any changes are made. Ongoing routine testing is complicated and could pose reliability challenges to the BES. As stated on page 8 of the System Maintenance Supplementary Reference document: “Excessive maintenance can actually decrease the reliability of the component or system. It is not unusual to cause failure of a component by removing it from service and restoring it. The improper application of test signals may cause failure of a component. For example, in electromechanical overcurrent relays, test currents have been known to destroy convolution springs. In addition, maintenance usually takes the component out of service, during which time it is not able to perform its function. Cutout switch failures, or failure to restore switch position, commonly lead to protection failures.” • Protection System Control Circuitry (Trip Circuits) (UFLS/UVLS Systems Only) – Need additional clarity on exactly what the test includes. “Complete functional trip test” should not include tripping the breaker. Proving the output of the relay should be sufficient. Systems that have all load shed on distribution circuits should require that trip output be confirmed but should not be required through to the trip coil due to constraints in tying distribution load. • Station dc supply (that has as a component any type of battery) – Under the 3 month interval activities, we disagree with the wording of the activity “Verify that no dc supply grounds are present.” The activity should instead read “Check for dc supply grounds and if any are found, initiate action to repair.” • Station dc supply (that has as a component any type of battery) – Under the 18 month interval activities, what is meant by “Verify continuity and cell integrity of the entire battery”? Also what is required to “Inspect the structural integrity of the battery rack”? The “Supplementary Reference Document” and “Frequently asked Questions” document should be made part of the standard to provide clarity to the requirements. • Station dc supply (that has as a component Valve Regulated Lead-Acid batteries) – Need more clarity on exactly what is required for a “performance or service capacity test of the entire battery bank”. The “Supplementary Reference Document” and “Frequently asked Questions” document should be made part of the standard to provide clarity to the requirement. • Station dc supply (that has as a component Vented Lead-Acid batteries) – Need more clarity on exactly what is required for a “performance, service, or modified performance capacity test of the entire battery bank”. The “Supplementary Reference Document” and “Frequently asked Questions” document should be made part of the standard to provide clarity to the requirement. • Protection system communication equipment and channels – Need additional clarity on exactly what is required for the substation inspection. What is required for power-line carrier systems? • UVLS and UFLS relays that comprise a protection scheme distributed over the power system – Need more clarity regarding the meaning of “distributed over the power system”.

No

Our comments are limited to Table 1a. More clarity is needed for many of the Maintenance Activities before assessing whether or not the intervals are reasonable. But as a general

comment we would like to understand the basis used to develop all of the intervals, and how that basis compares with research done by the Electric Power Research Institute (EPRI). It is our understanding that NERC did an industry survey of maintenance intervals and we would like to see the results of that survey as well. Specific comments: • Protective Relays – 6 calendar years is okay. • Voltage and Current Sensing Devices Inputs to Protective Relays – We question the logic for a 12-year interval. Proper functioning should be verified at commissioning, and then anytime thereafter if changes are made in a PT or CT circuit. Additional periodic checks may be warranted as suggested in Table 1A, however no additional checking should be required where circuit configuration will inherently detect problems with a PT or CT. For example, PTs & CTs that are monitored through EMS or microprocessor relays will be alarmed when they are out of specification. • Protection System Control Circuitry (Breaker Trip Coil Only) (except for UFLS or UVLS) – In locations where the continuity of the circuit is not monitored (via a light in the path or through a microprocessor relay) this would be a very complicated test, which could impact reliability, especially if done every three months. • Protection System Control Circuitry (Trip Circuits) (except for UFLS or UVLS) – Need clarity on exactly what the activity is to include. We believe proving one output all the way to the trip coil is appropriate. Proving every output and every auxiliary contact, to the trip coil would be unnecessarily invasive and could impact reliability, even if done every 6 calendar years. • Protection System Control Circuitry (Trip Circuits) (UFLS/UVLS Systems Only) – Interval is okay, but we disagree with tripping the breakers – proving the output of the relay should be sufficient. Systems that have all load shed on distribution circuits should require trip output be confirmed but should not be required through to the trip coil due to constraints in tying distribution load. • Station dc supply (that has as a component any type of battery) – 3 month and 18 month intervals are probably okay, depending on what is required to “verify continuity and cell integrity of the entire battery” and “inspect the structural integrity of the battery rack”. • Station dc supply (that has as a component Valve Regulated Lead-Acid batteries) – 3 calendar years and 3 month intervals are probably okay, depending on what is required for the “performance or service capacity test”. • Station dc supply (that has as a component Vented Lead-Acid batteries) – 6 calendar year and 18 month intervals are probably okay, depending on what is required for the “performance, service or modified performance capacity test”. • Protection system communication equipment and channels – 3 months and 6 calendar years seem reasonable, depending upon what is included in the substation inspection, and what is required for power-line carrier systems. • UVLS and UFLS relays that comprise a protection scheme distributed over the power system – Can’t comment on the 6 calendar year interval until we get more clarity regarding the meaning of “distributed over the power system”.

No

For utilities like us with large numbers of relays it’s too complicated, which drives us back to Table 1a.

No

For utilities like us with large numbers of relays it’s too complicated, which drives us back to Table 1a.

Yes

We strongly believe that this document should be made a part of the standard, either as an Attachment or worked into the requirements and tables. This will bring clarity to PRC-005 that is needed to get away from all the past problems that were due to a lack of clarity with the previous PRC-005 standards. Also, all the explanations and guidance lose force if they are not part of the standard. Auditors will only be bound by the standard.

Yes

We strongly believe that this document should be made a part of the standard, either as an Attachment or worked into the requirements and tables. This will bring clarity to PRC-005 that is needed to get away from all the past problems that were due to a lack of clarity with the previous PRC-005 standards. Also, all the explanations and guidance lose force if they are not part of the standard. Auditors will only be bound by the standard.

None

Regional Variance

Regions with ISO’s and RTO’s - Where the independent system operator (ISO) is not the same company as the entity doing testing and maintenance, the independent system operator could prevent the entity from performing scheduled maintenance and testing due to outage request constraints. There should be no violation in such a situation, and the maintenance and testing just rescheduled.

• Regarding the Implementation Plan, R1 compliance should be the first day of the first calendar quarter 18 months following applicable regulatory approvals. Entities will need this time to change monitoring equipment and develop extensive new work practices and procedures to assure time frames and documentation of practices comply with the wording of the revised standard. The time frames for R2, R3 and R4 are adequate except in cases where upgrades have to be developed and implemented in order to be able to meet the intervals (such as breaker trip

coil verification every three months). • FAQ 2C "If I am unable to complete the maintenance as required due to a major natural disaster, how will this effect my compliance with the standard." Response is the Compliance monitor will consider extenuating circumstances…We would like to see this statement clarified as to the time frame extensions that result in non compliance or fines. • R4 – States "each transmission owner…shall implement its PSPM, including identification of the resolution of all maintenance correctable issues". If the intent is to document resolution to misoperations this is a reasonable request. If the intent is to document that a relay was found out of calibration on a routine test, which was corrected by recalibration we need some clarity on expectations of how that would be recorded and tracked. As written this statement is vague and somewhat confusing since % of allowable error may vary utility to utility. • R4 doesn't appear to allow any time beyond the stated intervals for repairs or replacements that may take additional time. PRC-005-2 is a maintenance and testing standard, and R4 inappropriately requires a replacement strategy and an obsolescence strategy. Is R4 intended to apply to all equipment in Table 1?

Individual

Bob Thomas

Illinois Municipal Electric Agency

Yes

No

The Illinois Municipal Electric Agency (IMEA) is concerned the minimum maintenance activities may be too prescriptive for transmission subsystems that essentially operate radially. Please see comment under Question 7. Also, IMEA supports comments submitted by Florida Municipal Power Agency regarding applicability to UFLS systems.

No

IMEA is concerned the maximum allowable maintenance intervals may be too prescriptive for transmission subsystems that essentially operate radially. Please see comment under Question 7. Given the magnitude of reliability-related initiatives currently in progress, additional time is needed to evaluate these intervals, particularly for communications equipment, dc supply, and UFLS relays.

No

IMEA supports comments submitted by Florida Municipal Power Agency regarding use of the word "every" in Table 1c.

No

IMEA supports comments submitted by Florida Municipal Power Agency that the process outlined in Attachment A is biased towards larger utilities.

No

Yes

Under "Group by Type of BES Facility", 1. (page 15) – The radial exemption in the BES definition should be clarified to include transmission subsystems within a single municipality, where the transmission facilities – serving only subsystem load with one transmission source - essentially operate radially. A more practical application of the radial exemption would address smaller TOs whose system has minimal potential to impact the BES as a whole.

Individual

Scott Barfield-McGinnis

Georgia System Operations Corporation

Yes

Yes

Yes

Yes

Yes

No

No
Not aware of any.
None.
None.
Group
Public Service Enterprise Group Companies
Kenneth D. Brown
Yes
No
1) Table 1a – Protection System Control Circuitry (Trip Circuits) (UFLS/UVLS Systems Only). Currently, we test our UFLS relays on a 2 year maintenance interval. We test the relays and associated DC circuitry up to the DC lockout relays. It would require extraordinary effort to trip the breakers directly when performing these tests. Usually, each UFLS relay will trip several feeder breakers. This requirement states that we need to check the trip coil for each of those breakers each time we perform relay maintenance. This will add an unreasonable amount of time and effort to reliably switch out several 4kV or 13kV feeder every time we perform UFLS maintenance. For UFLS and UVLS schemes, we feel the requirement for DC control testing should not go past the lockout relay. The standard says to perform trip checks at the same time as UF maintenance. We test the relays on a 2 year interval right now. It is unreasonable to perform trip checks this often. The trip checks should follow a 6 year span (or longer) just like the BES equipment. 2) Table 1a – DC supply. The 18 month inspection requires a measurement of specific gravity and temperature. We believe that if a battery owner opts to perform an 18 month ohmic value test, this combined with the cell voltage readings and continuity tests will give a good indication of battery health. We do not feel that the measurement of specific gravity is required in conjunction with the tests performed above.
No
1) Table 1a – Station dc supply (that uses a battery and charger). The 6 year test requires that the charger perform as designed. PSE&G usually applies redundant battery chargers. PSE&G would like the drafting team to consider if it is appropriate to not require the 6 year battery charger tests if a battery owner uses primary and backup battery chargers. PSEG believes that the use of a redundant charger will maintain reliability at the same level or better level as provided by testing a single charger. 2) For protection system control circuits components (breaker trip coil only), suggest that a sub category with redundant trip coils be added with longer maintenance interval to allow for the reliability provided by redundancy.
Yes
Figure 2 “typical generation system” shows a typical auxiliary medium voltage bus, suggest that a line of distinction (dotted line) be added to the figure that defines the element connected to the BES (station Aux Transformer - SAT) and equipment not associated with protection of the SAT be shown as not part of the BES- PSMP.
Yes
1) R1 - PRC-005-1 required the protection owner to supply a “basis” for the chosen maintenance intervals. Is it intended that the new standard will no longer require the protection owners to provide a basis for their intervals as long as they meet (or better) the published required intervals? 2) Compliance 1.4 Data Retention – Needs more clarity. Some items require 12 years maximum maintenance interval. However, we may perform the same maintenance in 6 years. The requirement for data retention is 2 maintenance intervals. In this example, does this mean 12 years or 24 years? Are we required to maintain records for the maximum maintenance intervals allowed by the Standard or only for the two shorter maintenance intervals that we actually use? 3) Compliance – will need some guidance on to what is required for “proper documentation”. Generally, the relay technicians will scribe the actual test values for a given tests requiring the application of AC voltage and current. However, as an example, when performing DC checks (DC aux relay), the technician may simply state that the aux relay is “OK” without stating the DC coil pickup value in volts. Is this acceptable? Another example may be when performing battery inspections (ie verify proper voltage of station battery, verify that no DC grounds exist, etc), the inspector may simply indicate/document that the battery is “Ok”. This would indicate that appropriate 3 month inspections (as per table 1a) were completed and found to be within tolerances. Is this acceptable? If specific details are required to be stored on test media (paper test sheets, computer based data storage, etc), then please make some comments as such. 4) Table 1a – DC supply. The 3 month inspection requires “verify that no dc supply grounds are present”. This needs further clarification. What is the defined “limit” to determine whether we have a DC ground? The detection methods for determining the presence of a DC

ground will vary from indicating light balance to actual DC ammeters or voltmeters. It is assumed that the intent of this requirement is to ensure that there are no full DC grounds (dead shorts) in the DC terminals. Please clarify. 5) In the group by type of BES facility descriptions on pages 15 and 16 there is discussion about generation station auxiliary transformers and associated protection devices. It also cites examples of relays which need not be included even though they could result in tripping of the generating station. The line of demarcation is not well defined in the FAQs or in the standard itself. Suggest that verbiage be added that clearly defines the element (transformer) directly connected to the BES and it's associated protection is what is included in the PSMP requirements, items connected at lower voltage (down stream) are not within the PSMP requirement. 6) On page 15, the sample list of what is included in the standard, suggest that the list be expanded to show what is not included (a relay that monitors parameters and is used for control/ alarm but not protection); generator excitation controls that trip an auxiliary exciter. The list of items not included in the PSMP but that could trip the unit should be further defined and expanded.

1) R4 requires all maintenance correctable issues identified as part of a time based maintenance plan to be resolved in that same maintenance period. This places a burden on some items (for example, 3 month battery inspections) to achieve adequate resolution for problems that are not an immediate threat. For example, if a battery with a somewhat out of allowable range specific gravity is found near the end of the maintenance period, scheduling and performing the work to replace the battery could reasonably extend somewhat beyond the end of maintenance period. PSE&G requests that the drafting team revisit this requirement and allow flexibility for corrections to be made within a specified reasonable timeframe when correctible issues are identified that for practical reasons require extension for work completion beyond the end of the current maintenance interval. 2) Section 4.2.5.5 of the standard should define provide an example that just the transformer connected to the BES is included and specifically exclude connected equipment beyond the LV terminals. 3) Draft implementation plan for requirements R2, R3 & R4 discusses table 1a as basis, should also address tables 1b and 1c.

Individual

Jianmei Chai

Consumers Energy Company

Yes

No

The second sentence in Note 1 on page 20 should be changed to "A calibration failure is when the relay is inoperable and cannot be brought within acceptable parameters." Note 2 should be changed to "Microprocessor relays typically are specified by manufacturers as not requiring calibration. The integrity of the digital inputs and outputs will be verified by applying the inputs and verifying proper response of the relay. The A/D converter must be verified by inputting test values and determining if the relay measurements are correct."

No

The interval for Protection System Control Circuitry (breakers trip coil) should be set at 12 years since this is a scheme test. This test requires testing of the circuit and not just the coil. The interval for Protection System Control Circuitry (trip circuit) should be set at 12 years since this is a scheme test. The Protection System Control Circuitry (trip circuit) test would require tripping off customers on radial distribution circuits which is not acceptable. The interval for a station battery service test (lead acid) should be set at 5 years based on NFPA 70B.

In Table 1a for Station dc supply it requires verification that no dc supply grounds are present. DC grounds are common occurrences and the activity should be to document if dc grounds are present. Please specify how cell to cell connection resistance is measured. For station dc supply (battery is not used) change "Verify the continuity of all circuit connections that can be affected by wear and corrosion" to "Inspect all circuit connections that can be affected by wear and corrosion." Is "metered and monitored" equivalent to "alarming"? If a component failure causes the unit to trip, what is the purpose of testing it? It will always test positive until the point of failure and that point is identified when the unit trips. In the Facilities Section 4.2.5.4 "station service transformer" should be changed to "unit connected auxiliary transformer" to be consistent with Figure 2 of the Supplement Reference Document. Facilities Section 4.2.5.5 should also include "System connected auxiliary transformers are excluded when only used for unit

start-up." There should be an allow variance period (grace period) for the testing intervals. The maximum allowable time periods should be in calendar years, defined as "occurring anytime during the calendar year." The following statement should be added to Requirement 1.2: "Identification at a program level is permissible if all components use the same maintenance method."
Individual
Vladimir Stanisic
Ontario Power Generation
Yes
Yes
Yes
Yes
Yes
No
A well prepared and useful document.
No
It was a good idea to prepare such a document.
Not aware of any
Regional Variance
Maintenance activities, and especially intervals, prescribed in NPCC Directory 3 (Maintenance Criteria for BPS Protection) often differ from those in PRC 005 - 02. We recommend that NPCC aligns Directory #3 with PRC 005 - 02 as much as possible. Technical justification should be provided for any variance.
We note that Verification of Voltage and Current Sensing Device Inputs to Protective Relays is a somewhat ambiguous activity. NERC's audit observation team came up with a similar finding. The supporting documents provide some clarity but in our opinion it would be helpful if the SDT could elaborate this activity in more detail in the Table itself.
Group
Bonneville Power Administration
Denise Koehn
Yes
Yes
Yes
Yes
Will this document be a part of the standard? Are its explanations the official interpretation of the standard?
Will this document be a part of the standard? Are its explanations the official interpretation of the standard?
1. Tables 1a, 1b, and 1c were cumbersome to use because we found ourselves flipping back and forth to compare the requirements for the different levels of monitoring. Also, in some cases, the types of components were slightly different between the tables, which created confusion. We believe that it would be much easier to decipher a single table that listed each type of component only once and showed the requirements and maintenance intervals for the different levels of monitoring on a single page. Even if it took an entire page for each component, it would be very useful to see all of the options for that component without having to flip back and forth between tables. 2. Please clarify the requirements for trip coils. Table 1a has as a component type "breaker trip coil only", with a maximum maintenance interval of 3 months, while Table 1b has as a component type "trip coils and auxiliary relays". Table 1b say that there are no monitoring attributes for this component and to use the level 1 intervals, but then gives a

maximum maintenance interval of 6 years, which doesn't agree with the 3 month interval given in Table 1a. 3. The terminology used to describe the secondary currents and voltages provided to the relay is confusing. Under the modified definition of a protection system, it includes the term "voltage and current sensing inputs to protective relays", and in the tables it uses the term "current and voltage circuit inputs". These terms, especially the use of the word input, give the impression that the actual input circuitry of the protective relay is what is being described, but we believe that these terms are really meant to describe the secondary currents and voltages from the instrument transformers (or other devices). BPA suggests revising the terminology to describe the secondary currents and voltages. For example, in the maintenance activities section of the tables, you could say, "Verify that the secondary current and voltages provided to the relay are correct". 4. There is no mention to what the thresholds are when performing these maintenance activities or what corrective actions must take place and by when they need to be carried out. Is this something we should expect to see soon? 5. The need to measure the cell/unit internal ohmic value every 18 months can be argued. BPA's Substation Maintenance crew performs these measurements once every 24 months and with the Operators monthly inspections, we have been able to effectively catch any problems before a severe event/failure. 6. Communications: It is not clear specifically what equipment is included in "communications". The test interval of 12 years in table 1b is too long to verify continued proper operation of transfer trip tone equipment. Monitoring the presence of the channel does not provide any indication of whether the equipment can initiate a trip. Consequently, a required minimum interval of 12 calendar years is too long and does not do anything to verify proper communications support of the relay scheme. A shorter interval of 6 years, such as that in table 1a makes more sense from a functionality standpoint.

Individual

James H. Sorrels, Jr.

AEP

Yes

No

In the process of performing maintenance, some protection systems may need to be taken out of service on in-service equipment (bus differential protection for example) where redundant protection systems do not exist. This action seems counter to NERC recommendations, presenting a scenario for expanding outages during a simultaneous fault. Would the implementation plan include time for the additions of redundant protection systems? Comments expanded in question 10 response.

No

The availability to perform maintenance of many protection systems is dictated by the load or customer that is connected. Many of these industrial customers, who are outside the jurisdiction of NERC requirements, operate 24X7 and see the outages required for maintenance as a nuisance and a loss of revenue. How can the owner be held non- compliant for not meeting the intervals when they may not control the timing? Comments expanded in question 10 response.

No

How would the failure of a SCADA system affect the ability to take advantage of monitoring?

Yes

Although helpful in understanding and clarifying intent, the requirements of a standard should be clearly written so that multiple, lengthy supporting documents are not needed. These supporting documents do not get recorded into the registry as part of the standard and may or may not be used by auditors during compliance audits which could lead to different interpretations.

Yes

Although helpful in understanding and clarifying intent, the requirements of a standard should be clearly written so that multiple, lengthy supporting documents are not needed. These supporting documents do not get recorded into the registry as part of the standard and may or may not be used by auditors during compliance audits which could lead to different interpretations.

No known conflicts.

No none regional or business practice variances known.

Monitoring and tracking the activities prescribed in the standard seem too complex to manage at a level needed for auditable compliance. The activities prescribed seem to lean toward conventional protection systems and do not take into account newer special technology devices (High Voltage DC, Static Var Compensator and Phase Shifting transformer controls) and how there are to included. R1 1.2 Does the draft standard require a basis for an entities' defined time based maintenance intervals or can an entity just move directly to the intervals prescribed and use the standard as its basis? R4. This requirement seems to refer to failed equipment and its' reporting. This corrective maintenance activity is outside of the interpreted preventative maintenance theme of the standard and adds another layer of complexity in compliance data

retention. It also implies that a failed piece of equipment or segment could remain failed for the entire maintenance interval. Tables 1a & 1b. Station dc supply (that has as a component any type of battery) Interval: 18 months This requirement incorporates specific gravity testing (where applicable). Although (where applicable) is not defined, it seems it refers to all non-sealed batteries. For sealed batteries, a more frequent internal ohmic test is prescribed. The same 18 month requirement incorporates ohmic testing which is essentially equivalent to specific gravity. Specific gravity and measure of internal temperature are invasive tests which subject personnel to handling acid and subject the battery to damage. If the logic for sealed batteries is to do more frequent ohmic testing why not allow more frequent ohmic testing as a substitute for specific gravity? We would suggest ohmic testing every 6 months with any questionable results rechecked using specific gravity. This eliminates excessive intervention into all cells and gives a validity check on the ohmic testing. For Ni-Cad the performance service test has no option (6 year intervals). Typically, the Ni-Cad can yield a low voltage indication; however testing the cells in pairs allows testing and finding bad cells. Why not offer a more frequent ohmic test for the Ni-Cads? Facilities 4.2.1 and R1 '…. applied on, or are designed to provide protection for the BES.' This may be in conflict with Regional Entity (RE) BES definitions. There needs to a clear understanding of what is included and what is not without regional differences. There should be no responsibilities or requirements of the RE. BES also takes on different meanings depending upon which of the many standards it is applied. Data Retention 1.4 Data retention for two intervals could mean that records would need to be kept for 24 years. This seems impractical. Could audit evidence be used in lieu of actual data for long intervals? Tables: Where the interval is in months, the term 'calendar' months should be used for clarification. Table 1a '….verify the continuity of the breaker trip coil…..' The SDT assumed that Trip Coil Monitoring (TCM) could be accomplished by verifying/inspecting red lights. This may be true in most cases, but there are designs that do not incorporate this type of TCM and the breaker would have to be exercised every 3 months if not operated by natural events unless the scheme gets replaced. This seems counter productive to the reliability of the BES. The implementation plan does not take the time required for upgraded systems into consideration. Table 1a DC Supply, 3 month interval 'Verify no dc supply grounds are present.' Does this mean that you are non-compliant if you have a DC ground? This also needs to be clarified as to the amount of acceptable ground that could be present. Table 1a PS communications equipment channels 3 month interval: Do the activities imply that only alarms be verified and that no channel 'playback' be performed? If SPR relay or similar auxiliary relay is excluded as a protective relay, then do we not have to verify its tripping contact as part of the DC system? Table 1a The exclusion of UVLS/UFLS from certain activities is confusing. Does trip coil monitoring not have to be performed on these systems? Tables: Since PT and CT devices themselves are not included in the PS definition, then the word 'devices' should be removed from the type of component column describing inputs to the relay. Table 1a. Even though an entity may be on time-based intervals, would a natural occurring fault event reset the maintenance clock for the protection segment involved? Assessment of Impact of Proposed Modification to the Definition of Protection System: Reclosing and certain auxiliary relays have been excluded from protection system definition. This new definition would have an impact on other PRC standards that use this term in its requirements, specifically the misoperations investigation and reporting standards. These other standards, as written today, are not clearly written as to the application and assumptions as to what is included in a protection system. Trip coil Monitoring: If the trip coil is actually part of the DC circuitry, then why is there a differing (shorter) interval for this series connected element?

Individual

Jason Shaver

American Transmission Company

Yes

No

The Standard should focus on identifying the types of components to be tested but should not identify the specific maintenance activities that must be performed. Entities should be allowed the flexibility to develop and implement the appropriate maintenance activities necessary for each identified component. ATC is also concerned with the expressed identification of maintenance intervals. We do not believe that the standard should identify specific maintenance intervals but that it should require entities to identify their maintenance intervals appropriate for their system. If the team continues to pursue specific maintenance intervals it will be establishing the industries practices. Specific Concern: The standard identifies that entities should perform complete functional testing as part of its maintenance activities, but we are concerned that this could lead to reduced levels of reliability, because it requires entities to remove elements from service and then requires entities to perform tests that are inherently prone to human errors. We believe that the perceived benefits do not match the anticipated costs or improve system reliability.

No

ATC is concerned that the proposed standard would result in entities being required to use

outdated testing techniques and or practices. We believe that the standard should identify the "what" and not the "how". The identification of specific testing techniques and/or practices would likely result in entities being prevented from implementing improved techniques and/or practices. (The standard would have to be updated and receive FERC approval before entities could test/implement improved testing techniques and/or practices.) And example of the standard directing the how is with station batteries. The "specific gravity" test, proposed in the standard, is being used less or not at all by some registered entities because a more accurate method that is less intrusive and provides more accurate results has been developed. (This standard would basically require entities to go backwards in testing practices.) This standard should not prevent the use of improved techniques and/or practices.
No
ATC does not believe that there is a relay, on the market today, that has the ability to fully monitor itself as described in Table 1c. We believe that Table 1c should be deleted. (Table 1b could cover any device that has the ability to fully monitor if such a device is developed in the future.) ATC does not believe that NERC Reliability Standards should be used as an enticement for manufacturers to develop specific devices. Under the "General Description" in Table 1c, there is a reporting requirement identifying a 1 hour window. ("… must be reported within 1 hour or less of the maintenance-correctable issue occurring, to the location where action can be taken.") ATC believes that the team needs to define if this action is a phone call or physically verify the maintenance correctable issue which is occurring.
No
ATC agrees with this approach but is concerned that Attachment A does not contain enough language to support an entity that implements this practice. This attachment needs to clearly state that following your performance-based maintenance practices satisfies an entity's compliance obligations. Entities should not be subject to non-compliance over disagreements with their performance-based maintenance methodology.
No
No
Overall, the FAQ's are helpful. Explanations for questions dealing with the maintenance activities (e.g., battery testing) indicate an attempt to line up the requirement with IEEE standards. While commendable to attempt alignment with the industry, it is further justification that maintenance activities should not be included in the standard. Over the long term, technology or IEEE standards could change making the compliance standard inconsistent.
Order 672 says that standards should be clear and unambiguous This proposed standard is very complex. While the standard allows entities to select the appropriate maintenance strategy (time based, performance based or conditioned based) for their system the amount of data and tracking required to demonstrate compliance will be overwhelming.
Business Practice
Jointly-owned facilities should be a component of this standard. Comments: ATC shares services at Substations; consider dividing the services, i.e. batteries and PTs.
General Comment: The requirements section of the standard seems acceptable. NOTE: Why does R1.3 identify the inclusion of batteries? We believe that this should be part of the definition. We believe that the team needs to define the term "condition-based". Does the Protection System definition in PRC-005-2 or interpretation of the standard and the tables line up with other NERC Standards? The table formats (1a through 1b) are confusing and should be reconsidered. We found is difficult to relate one table to another. (No consistency in the Type of components)
Individual
Edward Davis
Entergy Services, Inc
Yes
Yes
No
A 3 month interval activity is likely to drive an entity to perform that activity every 2 months in a zero tolerance, 100% completion, mandatory compliance environment. There should be an allowance for a grace period on monthly designated activities, for instance a one month grace period, unless the intention is to have the activity performed more frequently than indicated. Additional guidance is needed on the monthly interval designations. Is it okay, for instance, to do all four tasks (3 month interval) at one time? Instinctively the answer should be "no", but if following the "calendar year" allowance, then maybe it is. Are we non-compliant on a 3 month interval task if we go one single day over the due date? Instinctively the answer should be "no", but some additional guidance should be provided. For example, the standard might be more understandable if it indicated that if the interval is "four per year" (or 3 month interval), then it

is allowed to perform these tasks no less than 45 days apart from each other as long as four are done within a calendar year, etc. We believe the 3 month trip coil task activity could actually shorten the life of the trip coil, introduce unpredictable trip coil failures, and increase the risk of an in-service failure of the trip coil if the verification is done by tripping the breaker each time. Increasing the risk of failure is counter-productive the intent of the standard.

Yes

Yes

No

Regarding Section 2.3, Applicability of New Protection System Maintenance Standards, there needs to be clarification and examples of applicable relaying associated with the language: "... and that are applied on, or are designed to provide protection for the BES." For example, is the application of reverse power schemes and directional overcurrent schemes considered applicable when considering the impact to the protection of the BES? We agree with the application of the term "calendar" in the PRC-005-2 Protection — System Maintenance Supplementary Reference document. There should be enough flexibility in interval assignments to allow for annual maintenance planning, scheduling and implementation.

Yes

It would be beneficial to also include an explanation or definition of the term "calendar year" in the standard. It is not readily apparent in the draft standard, especially in light of the new maximum interval requirements, that a task can be performed anytime between 1/1 and 12/31. Although addressed in the FAQ and Supplement, the terms "Upkeep" and "Restoration" are referenced in the definitions section of the standard but are not used anywhere else in the document, or with regard to routine activities. They should be eliminated from the standard unless there are upkeep or restoration requirements.

Individual

W. Guttormson

Saskatchewan Power Corporation

Yes

Saskatchewan would like clarification of what the expectations and rationale are for including Restoration in the PSMP. The other terms listed under the PSMP definition represent what we would consider as typical relay maintenance activities. We would typically consider Restoration as an Operational activity. The existing NERC standards seem to treat this an Operator concern addressed in PRC-001 R2.1 and R2.2 (The Operator shall take corrective action as soon as possible). If Restoration is included in PRC-005 doesn't PRC-001 have to be modified as well to remove these references? Saskatchewan would also like clarification on the term upkeep. Is the standard prescriptive and mandate the application of the latest firmware upgrades within a defined period, or is it flexible and can upgrades be applied as the utility deems necessary?

Yes

Yes

Yes

No

Saskatchewan agrees with the approach, but requires clarification in the definition of segment. The definition uses a population of 60 or more individual components but in the establishment of a PSMP, it only asks for a population of 30 or more. Which number will be used to define the segment?

Yes

The supplementary reference document is useful information if properly explained and justified. Are the suggestions in the reference document to become part of the standard, or simply recommendations of best practice from industry and serve as a document to reduce the number of interpretations requested?

Yes

The FAQ section is beneficial, but would suggest reviewing it to determine if it can be integrated within the reference document.

Saskatchewan recommends that the PC's and RC's designate what equipment is applied to protect the BES and should be included in the protection maintenance program. It is questionable whether the facility owners or Distribution Providers will know. What are the impacts on the BES from the protection systems identifed in Facilities 4.2.5 and the FAQ? For example there is an impact on the BES from generator under-frequency protection not being properly coordinated, but assuming it is and if it is not maintained isn't the impact to the unit itself? Inadvertent energization protection also seems to be an impact to the unit itself not the BES? The standard should be concerned with protection systems that impact the BES not equipment protection that has localized impacts however important they may be. Change Facilities 4.2.2 to “Protection System components used for under-frequency load-shedding systems which are installed to prevent system under-frequency collapse for BES reliability.” The reference to ERO is unnecessary and inappropriate.

Group

FirstEnergy

Sam Ciccone

Yes

Although we agree with the change in the title of the standard, as well as the proposed definition of "Protection System Maintenance Program", we feel that the definition could be clarified. With regard to "Restoration", which at present is described as "The actions to restore proper operation of malfunctioning components", it may be helpful to add examples of acceptable actions to restore operations, such as calibration, repair, replacement, etc.

No

In general we agree with the maintenance activities, except for the specific gravity and temperature testing included in the "Station dc Supply (that has as a component any type of battery)" of the tables 1a and 1b. We only perform this testing at nuclear facilities for insurance requirements. In transmission substation applications it has been eliminated due to the variability of results due to recharging/equalizing, water addition, temperature correction requirements, etc. In the Supplementary reference, section 15.4 Batteries and DC Supplies, third paragraph, the SDT indicates these tests are recommended in IEEE 450-2002 to ensure that there are no open circuits in the battery string. This is essentially a continuity check of the battery string. In the fourth paragraph, the SDT states that "..."continuity" was introduced into the standard to allow the owner to choose how to verify continuity of a battery set by various methods, and not to limit the owner to the two methods recommended in the IEEE standards." The SDT in Table 1a, the Maintenance Activity "Verify continuity and cell integrity of the entire battery", and in Table 1b, the Maintenance Activity "Verify electrical continuity of the entire battery". Based on the information in the Supplementary reference, the owner has to choose a method to verify continuity and the measurement of specific gravity and cell temperatures could be the selected method, however it should not be a required maintenance activity as shown in Tables 1a and 1b.

No

Although we agree with the proposed maintenance intervals, there may be extenuating circumstances beyond an entity’s control that could delay maintenance on a particular protection system. We ask the SDT to consider adding a footnote to these intervals that allows a grace period of up to three months when outages necessary for maintenance must be delayed due to unusual system conditions or other issues where an outage would be detrimental to the entity's system.

Yes

Yes

Although we agree with the parameters of the proposed PBM, we have the following comments: 1. We question the inclusion of misoperations in countable events as described in footnote 4. Since standard PRC-004 already requires analysis and mitigation of Protection System Misoperations through a Corrective Action Plan, entities should not be required to repeat this analysis and mitigation in PRC-005. We ask that the SDT clarify the requirements to allow a tie between PRC-005 and PRC-004 so as to assure work is not duplicated. 2. We are not receptive to using this methodology to develop intervals due to the detailed tracking and analysis that will be required to establish maximum intervals. The approach may suit other utilities and thus, we are not opposed to the methodology being contained within the standard.

Yes

1. Sec. 2.3 (pg. 4) – This section appears to be discussing the purpose of the standard and not the applicability. We suggest changing the title of Sec. 2.3 to "Purpose of New Protection System Maintenance Standard." Also, in Sec. 2.3 it states: "The applicability language has been changed from the original PRC-005: '... affecting the reliability of the Bulk Electric System (BES) ...' To the present language: '... and that are applied on, or are designed to provide protection for the BES.' However, the posted Draft 1 of PRC-005-2 still has the original Purpose statement. Is the SDT planning to revise the Purpose statement as discussed in Sec. 2.3 of the Ref. document? It

appears that this statement is included in the applicability section 4.2.1 but believe it is more appropriate as a general purpose statement applying to the whole standard. 2. Sec. 2.4 (pg. 4) – Remove the extra word "that" from the second sentence of this section. 3. In the Supplementary reference, section 15.4 Batteries and DC Supplies, third paragraph, the SDT indicates these tests are recommended in IEEE 450-2002 to ensure that there are no open circuits in the battery string. This is essentially a continuity check of the battery string. In the fourth paragraph, the SDT states that "..."continuity" was introduced into the standard to allow the owner to choose how to verify continuity of a battery set by various methods, and not to limit the owner to the two methods recommended in the IEEE standards." The SDT in Table 1a, the Maintenance Activity "Verify continuity and cell integrity of the entire battery", and in Table 1b, the Maintenance Activity "Verify electrical continuity of the entire battery". Based on the information in the Supplementary reference, the owner has to choose a method to verify continuity and the measurement of specific gravity and cell temperatures could be the selected method, however it should not be a required maintenance activity as shown in Tables 1a and 1b.

Yes

Pg. 17 (What forms of evidence are acceptable) – Although Measures are not yet developed and posted with the standard, we wanted to point out that the SDT should consider adding these acceptable forms of evidence in the measures of the standard.

1. BES reclosing schemes were recently questioned in a PRC-005-1 interpretation but there is no mention of reclosing schemes in the draft standard. This interpretation should be integrated into the requirements of PRC-005-2. 2. Lack of Exception Process - The standard as written does not reflect the fact that any one group, such as a TO performing maintenance on a BES, does not have full control over when an outage can be taken to perform maintenance activities. Especially regarding functional testing, where the equipment needs to be exercised resulting in some BES components being de-energized, it can be very difficult in certain parts of the T&D system to obtain the necessary outage to complete these tasks. Even with proper planning, changes in system conditions and unforeseen equipment problems in other areas can impact the ability to schedule an equipment outage appropriately. Accordingly, a TO can be penalized for not completing prescribed maintenance within prescribed limits due to factors outside of their control. This type of scenario has already been experienced where maintenance activities are scheduled upwards of a year in advance, and then inclement weather or system conditions outside of a TO's service territory (e.g. unanticipated generating unit shutdown) prevent the work from taking place. The standard should provide some specific guidance to allow relief for such situations, or that properly incents or even requires independent system operators (ISOs) and other outside groups to also ensure maintenance is completed within prescribed intervals. If a TO properly considers factors such as weather (not scheduling critical outage during middle of summer), resource commitment, schedule (the requested outage window is at least one year before maximum interval is met), time of day (performing work during after hours period when load is down) etc. then if outages are still denied, that the TO is not penalized for being out of compliance as maximum intervals are exceeded. This suggested "exception process" should provide requirements for all parties involved, both those performing the maintenance as well as those controlling and overseeing the system. There should be required documentation to prove that the parties on both sides made proper efforts to complete the required maintenance, as well as discuss conflict resolution. 3. With regard to the phrase "including identification of the resolution of all maintenance correctible issues" in Req. R4, we feel that this requirement should be a subset of R4 since it is part of the implementation of the PSMP. We suggest removing the phrase from the main requirement of R4 and creating a new 4.3 as follows: "4.3. For all maintenance programs, identify resolutions for all encountered maintenance correctible issues and take corrective action within a time period suitable for maintaining reliability of the affected protection system." 4. With regard to the proposed modification of "Protection System", we suggest adding the word "devices" after "voltage and current sensing". This would also match what appears to be the SDT's intended wording as shown in the Supplementary Reference Document sec. 2.2. Also, we suggest modifications to the proposed definition to add clarity to the types of communications system protection and the voltage and current sensing devices. The following is our suggestion for wording of the definition: "Protective relays, communication systems used in communications aided (or pilot) protection, voltage and current sensing devices and their secondary circuits to protective relays, station DC supply, and DC control circuitry from the station DC supply through the trip coil(s) of the circuit breakers or other interrupting devices." 5. Protection System Communication Equipment and Channels - Some power line carrier equipment has automatic testing and remote alarming and some that does not. For other relay communication schemes (e.g., tone transfer trip ckts), if the circuit travels over our private communications network (fiber or microwave radio), the communication equipment is remotely monitored/alarmed. In other cases it is not remote monitored. We ask for clarification as follows: As part of our maintenance program, we check that signal level, reflected power, and data error rate are all within tolerance at the interface between the end equipment and the communication link. Our question is: Does this meet the intent of the proposed requirements in PRC-005-2 for

maintenance activities for Protection System Communication Equipment and Channels? Or do the requirements ask for something beyond this? 6. We suggest combining 4.2.2, 4.2.3 and 4.2.4 to read as a new 4.2.2 "Protection System components which are installed as a underfrequency load shedding, underfrequency generation shedding, under voltage load shedding or Special Protection System for BES reliability."

Individual

Alice Murdock

Xcel Energy

Yes

No

Regarding battery chargers, does the SDT propose that OEM-type tests be performed to validate the rated full current output and current limiting capabilities? It has been proposed that simply turning off the charger and allowing the batteries to drain for a period of several hours, then returning the charger to service, will validate these items. It is not clear that an auditor would come to the same conclusion, since it appears open to interpretation. Please modify to make this clear. If an entity has an over-sized battery charger, they can (and should) only test to the max capacity of the battery bank. Suggest changing “full rated current” to “designed charging rate”.

No

Within the tables, several components related to UFLS/UVLS systems have an interval of “when the associated UVLS or UFLS system is maintained.” Yet, there is no maximum interval established for a UVLS or UFLS system. We feel this item should be clarified. If the intent of the SDT is to tie the testing to when the UFLS/UVLS relays are maintained, so that all components are tested at the same time, then this should be made clear. One possible resolution would be to change the interval to read: “when the associated UVLS/UFLS relays are maintained”.

Yes

Yes

Yes

The information in the supplementary reference document is very helpful and valuable. Yet, it is not clear how the document would be managed/revised, nor what role it plays in compliance monitoring. There needs to be a clear understanding if everything in the document is required for compliance, e.g. criteria for monitored systems, etc. Additionally, we feel that evidence should be addressed within the supplementary reference document.

Yes

The Frequently-asked Questions seem to act as interpretations to the standard. What roll will they play in determining compliance? On table 1b (page 11) the UFLS and UVLS maintenance activities indicate that tripping of the interrupting device is not required, but it uses the term ‘functional trip test’. The FAQ indicates that a ‘functional trip test’ does require tripping the interrupting device. This conflicts with what is in the table and should be corrected in the FAQ to reflect that no trip is required.

Please clarify if the following are subject to PRC-005-2 requirements: 1) a battery that is in a station where the only BES element is a UFLS scheme 2) batteries used only to support communication elements (microwave houses)

Group

NERC Standards Review Subcommittte

Carol Gerou

Yes

N/A

No

A. In the tables, the term “verification” should be switched with “check”. B. The verification activities include testing for “specific gravity” in batteries. Since “impedance testing” will give you the same results or similar results; revise the tables to reflect this, as well. C. Another question deals with the table title verbiage. Table 1a and 1c are labeled as Protection Systems, while Table 1b is Protection System Components. One could interpret table 1c as saying that if any one component of the protection system in question is not in compliance with level 3 monitoring stipulations, then every component must be degraded to level 2 monitoring as so forth. This needs to be clarified. D. Some activities, such as complete functional testing, could lead to reduced levels of reliability, because [1] it requires removing elements of the transmission system from service and [2] it requires performing tests that are inherently prone to human

errors. The MRO NSRS does not believe the perceived benefits justify the anticipated costs. E. In the tables, under Table 1a and Protection system communications equipment and channels, a technical justification should be provided to show that performance and quality channel testing would result in the reduction of regional disturbances and blackouts. Quality and performance testing is subjective. Subjective tests are inherently poor compliance measures. The requirements to measure, document, store, and prove channel quality data is a poor use of limited compliance resources. F. In the tables, under Table 1a and Station DC supply (and anywhere else), equalize (battery) voltages should be eliminated. Equalizing battery voltages reduces battery life and do not provide a significant gain in overall system reliability to offset the loss of battery life. G. In the tables, under Table 1a and Station DC supply (and anywhere else), delete the reference to measuring the fluid temperature of “each cell”. A technical basis should be demonstrated that shows why individual cell fluid temperature measurement would reduce the occurrence of regional disturbances. If fluid temperature measurement remains in the standard, a single fluid temperature measurement per battery bank should be sufficient to demonstrate that the battery bank was performing within normal parameters. The compliance burden to add fluid temperature measurements for each cell is unwarranted and reduces compliance personnel resources that could be utilized on more important reliability activities.

No

A. It looks like for unmonitored systems, breaker trip coils are to be checked for continuity every 3 months. There is no mention of auxiliary relays. In the partially monitored and fully monitored sections, trip coils and auxiliary relays are lumped in the same category at 6 calendar years each. What happened to the aux relays in the unmonitored section? Also, note that the term "trip coils" is used, not "breaker trip coils" in the type of component category. B. The maintenance interval for Protection System Control Circuitry (Trip coils and Auxiliary relays) is 6 years, but the interval for relay output contacts is 12 years when these components are partially monitored. It seems that these things all have a similar reliability. If commissioning tests are done diligently, the trip DC availability is continuously monitored and the trip coil itself is continuously monitored, no functional tests should be needed. The only thing that would be done at PM time would be to ensure that the alarming method is still functional.

Yes

A. The MRO NSRS agrees with this approach; however, I think most entities will not see the advantage of condition-based maintenance until they can resolve any gaps in data retention. If an entity was retaining a set of maintenance records but failed to include all the needed information as specified in this standard so they would need to adjust their maintenance procedure to collect all information and then they would need to wait for the entire retention period until they could start using the extended maintenance interval. If an entity had a collateral set of records which verified the information that lacked in the original maintenance record then could the entity start using the extended maintenance interval? For example, an entity has records showing that they have maintained a voltage or current transformer within the prescribed maintenance interval listed in level 1 monitoring (which is a maximum 12 year maintenance interval). Could this same entity go to level 3 monitoring (which is a continuous maintenance interval) immediately if it can query their SCADA and produce detailed records indicating the accuracy of the PT or CT for the maintenance records already retained? B. For lockout relays, if commissioning tests are done diligently, the trip DC availability is continuously monitored and the trip coil itself is continuously monitored, is it necessary to operate these relays for functional testing? For breaker failure lockout relays, re-verifying the operation of the coil and all the contacts could mean taking multiple breakers and line terminals out of service at the same time. Functional trip tests could cause unintentional tripping of equipment, cause equipment damage and interruption of service to customers. It's hard to see how the reliability of the BES is significantly improved by doing this test. The MRO NSRS feels the risk of adverse impact could be greatly reduced by a longer interval such as 12 years. C. In table 1c, the word “continuous or continuously monitored” is used. Please clarify the “within 1 hour” time frame takes into account that there may be a communication outage (failover) that will prevent an entity to “continuously” monitor a device.

No

A. The MRO NSRS is concerned that this approach could lead to non-compliance if the company follows this process and a Compliance Auditor disagrees with the method that was used. An applicable entity should be protected if they follow the standard appropriately. There should be some assurance of a grace period for mitigation if this selected approach was not accepted. B. Please provide the basis for having at least 60, then taking 30 (50%) for testing/maintenance. This may give an unfair advantage to larger companies rather than being fair across the board. This places an undue burden on smaller companies by having to team up with other asset owners.

No

N/A

No

Overall, the FAQ’s are helpful toward understand what the SDT was thinking. Explanations for

questions dealing with the maintenance activities (e.g., battery testing) indicate an attempt to line up the requirement with IEEE standards. While it is commendable to attempt alignment reliability standards with other industry standards, it also begs the question of why requirements that are already covered by other standards should be repeated in reliability standards. In addition, if the other standards are changed, then they could become inconsistent with or contradictory to the reliability standard.

Conflict: Order 672 says that standards should be clear and unambiguous.

A. In the applicability section 4.2.5.5, change the statement to say, “Protection systems for BES connected station-service transformers for generators that are part of the BES.” B. In the applicability section 4.2.5, change the statement to replace “are part of” with “directly connected to”. The “are part of” will be left to interpretation. Please indicate the added reliability benefit by collecting this in Table 1a Page 9 protection system communication equipment and channels. C. If a breaker failure relay is also being used for sync-check, is it required to verify the voltage inputs since they are used for a closing function and not a tripping function? It is understood that the current inputs would have to be verified since these are used for breaker failure tripping. D. Please clarify requirement R1-1.1, does one have to individually list out each Protection System and its associated maintenance activities or can the PSMP be a generalized procedure that covers each of the components in all of a utility's Protection Systems? E. All references to breakers should be eliminated; thus, eliminate breaker trip coils. Breakers are primarily mechanical in nature and should be excluded similar to mechanical relay systems such as sudden pressure relays. F. Clarify that trip coils checks or tests can be verified through alternate means other than physically tripping the coil or potentially requiring system outages to physically trip a coil. Alternate tests could consist of checking self monitoring relays, continuity lights, etc. Trip coil tests could require transmission line outages which can be denied by regulatory authorities due to system conditions beyond an entity’s control. Significant delays of months or longer could occur to obtain a transmission line outage. Further, potentially requiring transmission line outages for trip coil test could harm BES reliability by increase the number of force transmission line outages due to testing. System reliability could be significantly negatively impacted anytime testing on trip circuits is performed due to human errors causing outages or regional disturbances. G. One item R1.3 (inclusion of batteries) was questioned as why this was specifically called out. It should be part of the definition. H. Define the term “condition-based”. I. The format of the tables is poor with 17 line items addressed in each. It is difficult to relate one table to another because they are not consistent with regard to the type of components. For example table 1a references of components a “breaker trip coil (only)” and the 1b references “trip coils and auxiliary relays”. J. R1.1 please add “… as they apply to the applicable entity”. As stated now, all three tables must be accomplished. K. Please add the words “time based maintenance methods” to table 1a for clarity in the heading. L. Table 1b under general description, last sentence the word “elements” should be replaced with “maintenance activities” which will provide exactly what is intended. M. Table 1b, if maintenance activities for level 2 monitoring include level 1 maintenance activities, then redundant activities in table 2 that are contained in table 1 should be removed (the same for table 3 to table 2 to table 1). N. If an entity maintenances a protective relay such that it is included in level 2 monitoring (a Condition Based Maintenance program) and this relay is considered to have a maximum interval of 12 years, does the entity need to also perform the maintenance activities for level 1 monitoring since the table 1b header indicates, “General Description: Protection System components whose alarms are automatically provided daily (or more frequently) to a location where action can be taken for alarmed failures. Monitoring includes all elements of level 1 monitoring with additional monitoring attributes as listed below for the individual type of component?”

Group

Platte River Power Authority Maintenance Group

Deborah Schaneman

Yes

No

Minimum maintenance activites should be based on categorization of relays and defined maintenance actions system by system using historical and definitively known data entity by entity. By establishing specific minimum maintenance activities you risk entites changing currently effective maintenance programs to programs that match minimum maintenance activities to meet requirements in the Standard which could be less effective for their system.

No

Electro-mechanical relays are historically out of tolerance well before the 6 year maximum allowable maintenance intervals defined witin table 1a.

Yes

Yes

Yes

It isn't clear in the Supplementary Reference Document why lock-out relays (86) are included as a component of Protection Systems that require a 6 year maximum interval. Historically we haven't experienced any failures with lock-out relays and feel the risk of causing a system reliabiliy issue by removing it from service and restroing it far out weghts the benefits of testing it. What, if any evidence, i.e. equipment failure, does the standard drafting team use to mandate routine testing of 86 devices? Are we fixing something that isn't broke here? The FERC order directed NERC to submit a modification to PRC-005-1 that includes a requirement that maintenance and testing of a protection system be carried out within a maximum allowable interval that is appropriate to the type of the protection system and its impact on the reliability of the BPS. It would seem more appropriate to allow each entity to set their own maximum allowable interval based on studies and historical data of their specific protection system and impact on the reliability of the BPS opposed to a blanket approach that covers all systems regardless of their size or system confirguration.

No

Individual

Martin Bauer

US Buereau of Reclamation

No

The alteration of the program to include testing as a component does not add value to system reliability. The existing requirement can only be completed with procedures that some of the elements listed under the program. The proposed program is far too restrictive in the manner in which it requires specific actions and thereby excludes others. The program element for monitoring is listed; however, the monitoring is intended to be used through an electronic subsystem and does not allow for observations by experienced technical staff. Testing is listed; however, the definition is limited to the application of signals and precludes other procedures. Further, the definition of Protection System proposed is a nested definition which tends to expand the number of devices covered (any device that has voltage and current sensing inputs) irrespective of their impact on the BPS.

No

2. The basis for developing the maintenance intervals was adequately explained. It is understood that FERC would like uniform intervals; the intervals do not recognize the tremendous variation in installation and equipment and possibly manufacturer recommendation. Point in fact is the interval for listed for electromechanical relays. Some of these relays must be calibrated every year or three years on the outside. Relays that have a history of stable performance based on consistently good test results. The intervals for battery maintenance are not reasonable. The capacity testing at 3 years is higher than the 5 year which battery manufactures require.

No

The definition of Protection System components does not add clarity. The standard proposes including stations service transformers for generation facilities, however, the protection system definition does not include those elements. The inclusion of station service transformers would only be appropriate if the protection associated with the transformer results in the tripping of a transmission element.

No

The condition based monitoring only provides for a very narrow process and excludes sound judgment in determining maintenance intervals. As long as the registered entity establishes parameters by which variation in the prescribed maintenance intervals are determined, justified variation should be allowed.

No

The parameters established can only be implemented with documentation that defined in the document but is not readily available.

No

6. The document will require revisions. Performance based maintenance is establishing a strategy to achieve a desired performance. The document limits strategy to statistical analysis of failure rates. The document assumes a modern protection system with a high level of monitoring. Facilities which barely qualify would not have high end monitoring installed. The document also refers to “exercising a circuit breaker through t relay tripping circuits using remote control capabilities via data communication.” This repeated several times throughout the document as a means of increasing the TBM. This function, if indeed used, would require maintenance. This

function is very dangerous and could introduce a cyber vulnerability.
No
The significance of this issue is not relfected in the period of time needed to review the documents. The supplement has many good ideas; however, the concept is going further than needed for establishing consistent maintenance intervals.

NERC
NORTH AMERICAN ELECTRIC RELIABILITY CORPORATION

Consideration of Comments on Draft Standard Version 1 Protection System Maintenance and Testing — Project 2007-17

The Protection System Maintenance and Testing SDT thanks all commenters who submitted comments on PRC-005-2 — Protection System Maintenance standard. This standard was posted for a 45-day public comment period from July 24, 2009 through September 8, 2009. Stakeholders were asked to provide feedback on the Standard through a special electronic comment form. There were 57 sets of comments, including comments from more than 130 different people from over 75 companies representing all of the 10 Industry Segments as shown in the table on the following pages.

http://www.nerc.com/filez/standards/Protection_System_Maintenance_Project_2007-17.html

The SDT proposed to change the name of the draft standard from "Protection System Maintenance and Testing" to "Protection System Maintenance", and to include testing as one component of "Protection System Maintenance Program", which will be a defined term. The majority of stakeholders agreed with both the change in the name of the draft standard and with the definition of Protection System Maintenance Program. Only two respondents disagreed and their comments were addressed. Hence, the draft standard will now be referred to as "Protection System Maintenance."

Stakeholders generally disagreed with the minimum maintenance activities as well as the maximum allowable intervals included in Tables 1a, 1b, and 1c in the draft standard. As a result, the SDT made extensive changes to the standard and tables regarding the maintenance activities, and made minor changes relative to the associated maintenance intervals.

A majority of the respondents agreed with the general approaches regarding condition-based and performance based maintenance programs but provided suggestions on improving the clarity of the provisions within the tables and expressed concerns about perceived administrative issues in establishing the programs. The SDT responded by revising the tables to improve clarity and addressing the administrative concerns in its responses to comments.

Stakeholders expressed appreciation for the "Supplementary Reference Document" and the "Frequently-asked Questions" (FAQs) document. In its responses to the comments, the SDT explained the relationship between the Standard and the two documents. Additionally, the SDT addressed many of the comments in Questions 1-5 by developing additional FAQ content, and referring the respondents to the FAQs document.

Most stakeholders were unaware of any conflicts between the proposed standard and any business practices; however, a few commented that conflicts possibly existed with existing business practices or with other organizations such as the Nuclear Regulatory Commission. The SDT provided clarifying explanations to illustrate that conflicts are not actually present.

Stakeholders made numerous comments and suggestions resulting in substantial changes to the draft Standard, the Supplemental Reference Document, the FAQs, and minor changes to the draft Implementation Plan.

If you feel that your comment has been overlooked, please let us know immediately. Our goal is to give every comment serious consideration in this process! If you feel there has been an error or omission, you can contact the Vice President and Director of Standards,

Gerry Adamski, at 609-452-8060 or at gerry.adamski@nerc.net. In addition, there is a NERC Reliability Standards Appeals Process.[1]

---

[1] The appeals process is in the Reliability Standards Development Procedures: http://www.nerc.com/standards/newstandardsprocess.html.

Index to Questions, Comments, and Responses

1. The SDT proposes to change the name of the draft standard from "Protection System Maintenance and Testing" to "Protection System Maintenance", and to include testing as one component of "Protection System Maintenance Program", which will be a defined term. Do you agree? If not, please explain in the comment area. 11

2. Within Table 1a, Table 1b, and Table 1c, the draft standard establishes specific minimum maintenance activities for the various types of devices defined within the definition of "Protection System". Do you agree with these minimum maintenance activities? If not, please explain in the comment area. 18

3. Within Table 1a, the draft standard establishes maximum allowable maintenance intervals for the various types of devices defined within the definition of "Protection System", where nothing is known about the in-service condition of the devices. Do you agree with these intervals? If not, please explain in the comment area. 58

4. Within Tables 1b and 1c, the draft standard establishes parameters for condition-based maintenance, where the condition of the devices is known by means of monitoring within the substation or plant and the condition is reported. Do you agree with this approach? If not, please explain in the comment area. 84

5. Within PRC-005 Attachment A, the draft standard establishes parameters for performance-based maintenance, where the historical performance of the devices is known and analyzed to support adjustment of the maximum intervals. Do you agree with this approach? If not, please explain in the comment area. 94

6. The SDT has provided a "Supplementary Reference Document" to provide supporting discussion for the Requirements within the standard. Do you have any comments on the Supplementary Reference Document? Please explain in the comment area. 102

7. The SDT has provided a "Frequently-asked Questions" document to address anticipated questions relative to the standard. Do you have any comments on the FAQ? Please explain in the comment area. 115

8. If you are aware of any conflicts between the proposed standard and any regulatory function, rule, order, tariff, rate schedule, legislative requirement, or agreement please identify the conflict here. 129

9. If you are aware of the need for a regional variance or business practice that we should consider with this project, please identify it here. 135

10. If you have any other comments on this standard that you have not already provided in response to the prior questions, please provide them here. 140

The Industry Segments are:

1 — Transmission Owners
2 — RTOs, ISOs
3 — Load-serving Entities
4 — Transmission-dependent Utilities
5 — Electric Generators
6 — Electricity Brokers, Aggregators, and Marketers
7 — Large Electricity End Users
8 — Small Electricity End Users
9 — Federal, State, Provincial Regulatory or other Government Entities
10 — Regional Reliability Organizations, Regional Entities

		Commenter	Organization	Industry Segment									
				1	2	3	4	5	6	7	8	9	10
1.	Group	Joe Spencer - SERC staff	SERC Protection and Controls Sub-committee (PCS)										X

	Additional Member	Additional Organization	Region	Segment Selection
1.	Paul Nauert	Ameren Services Co.	SERC	1, 3, 5
2.	Rick Conner	E.ON Services Inc.	SERC	1, 3, 5, 6
3.	Charles Fink	Entergy	SERC	1, 3, 5, 6
4.	Phil Winston	Georgia Power Co.	SERC	1, 3, 5
5.	Steve Waldrep	Georgia Power Co.	SERC	1, 3, 5
6.	Jay Farrington	PowerSouth Energy Coop.	SERC	1, 3, 5, 6
7.	Jerry Blackley	Progress Energy Carolinas	SERC	1, 3, 5, 6
8.	Marion Frick	South Carolina Electric and Gas Co.	SERC	1, 3, 5, 6
9.	Bridget Coffman	South Carolina Public Service Auth.	SERC	1, 3, 5, 6
10.	George Pitts	TVA	SERC	1, 9, 3, 5
11.	Ron Broocks	Va.Electric and Power Co.	SERC	1, 3, 5
12.	Joe Spencer	SERC Reliability Corp	SERC	10

		Commenter	Organization	Industry Segment									
				1	2	3	4	5	6	7	8	9	10
2.	Group	Rick Shackleford	Green Country Energy LLC					X					

	Additional Member	Additional Organization	Region	Segment Selection
1.	Danny Parish		SPP	5
2.	Ron Zane		SPP	5
3.	Dennis Bradley		SPP	5
4.	Mike Anderson		SPP	5
5.	Greg Froehling		SPP	5

3.	Group	Guy Zito	Northeast Power Coordinating Council										X

	Additional Member	Additional Organization	Region	Segment Selection
1.	Ralph Rufrano	New York Power Authority	NPCC	5
2.	Alan Adamson	New York State Reliability Council, LLC	NPCC	10
3.	Gregory Campoli	New York Independent System Operator	NPCC	2
4.	Roger Champagne	Hydro-Quebec TransEnergie	NPCC	2
5.	Kurtis Chong	Independent Electricity System Operator	NPCC	2
6.	Sylvain Clermont	Hydro-Quebec TransEnergie	NPCC	1
7.	Manuel Couto	National Grid	NPCC	1
8.	Chris de Graffenried	Consolidated Edison Co. of New York, Inc.	NPCC	1
9.	Brian D. Evans-Mongeon	Utility Services	NPCC	8
10.	Mike Garton	Dominion Resources Services, Inc.	NPCC	5
11.	Brian L. Gooder	Ontario Power Generation Incorporated	NPCC	5
12.	Kathleen Goodman	ISO - New England	NPCC	2
13.	David Kiguel	Hydro One Networks Inc.	NPCC	1
14.	Michael R. Lombardi	Northeast Utilities	NPCC	1
15.	Greg Mason	Dynegy Generation	NPCC	5
16.	Bruce Metruck	New York Power Authority	NPCC	6
17.	Chris Orzel	FPL Energy/NextEra Energy	NPCC	5
18.	Robert Pellegrini	The United Illuminating Company	NPCC	1

	Commenter	Organization	Industry Segment									
			1	2	3	4	5	6	7	8	9	10
19. Michael Schiavone	National Grid	NPCC 1										
20. Peter Yost	Consolidated Edison Co. of New York, Inc.	NPCC 3										
21. Gerry Dunbar	Northeast Power Coordinating Council	NPCC 10										
22. Lee Pedowicz	Northeast Power Coordinating Council	NPCC 10										
23. Randy MacDonald	New Brunswick System Operator	NPCC 2										
4. Group	Jalal Babik	Electric Market Policy	X		X		X	X				
Additional Member	**Additional Organization**	**Region**	**Segment Selection**									
1. Louis Slade		SERC	6									
2. Mike Garton		NPCC	5									
3. John Loftis	Electric Transmission	SERC	1									
4. Ron Broocks	Electric Transmission	SERC	1									
5. Group	Richard Kafka	Pepco Holdings Inc. - Affiliates	X		X		X	X				
Additional Member	**Additional Organization**	**Region**	**Segment Selection**									
1. Carlton Bradshaw	Atlantic City Electric	RFC	1									
2. Ken Lehberger	Atlantic City Electric	RFC	1									
3. Randal Coleman	Delmarva Power & Light	RFC	1									
4. Guy Eberwein	Delmarva Power & Light	RFC	1									
5. Walt Blackwell	Potomac Electric Power Co	RFC	1									
6. Group	David A Szulczewski	Detroit Edison			X	X	X					
Additional Member	**Additional Organization**	**Region**	**Segment Selection**									
1. David A Szulczewski	Detroit Edison	RFC										
2. Raju J Vengalil	Detroit Edison	RFC										

		Commenter	Organization	Industry Segment									
				1	2	3	4	5	6	7	8	9	10
7.	Group	Kenneth D. Brown	Public Service Enterprise Group Companies	X		X		X	X				

	Additional Member	Additional Organization	Region	Segment Selection
1.	Scott Slickers	PSEG Power Connecticut	NPCC	5
2.	Clint Bogan	PSEG Fossil LLC	ERCOT	5
3.	James Hebson	PSEG ER&T LLC	RFC	6
4.	James Hubertus	PSE&G	RFC	1, 3

8.	Group	Denise Koehn	Bonneville Power Administration	X		X		X	X				

	Additional Member	Additional Organization	Region	Segment Selection
1.	Dean Bender	SPC Technical Svcs	WECC	1
2.	Mason Bibles	Sub Maint and HV Engineering	WECC	1
3.	Laura Demory	PSC Technical Svcs	WECC	1

9.	Group	Sam Ciccone	FirstEnergy	X		X	X	X	X				

	Additional Member	Additional Organization	Region	Segment Selection
1.	Doug Hohlbaugh	FE	RFC	
2.	Jim Kinney	FE	RFC	
3.	Eric Schock	FE	RFC	
4.	Allen Morinec	FE	RFC	
5.	Ken Dresner	FE	RFC	
6.	Bill Duge	FE	RFC	
7.	Art Buanno	FE	RFC	
8.	Brian Orians	FE	RFC	
9.	Jim Detweiler	FE	RFC	
10.	Ken Bunting	FE	RFC	

10.	Group	Carol Gerou	MRO NERC Standards Review Subcommittee										X

	Additional Member	Additional Organization	Region	Segment Selection

		Commenter	Organization	Industry Segment									
				1	2	3	4	5	6	7	8	9	10
1. Joe DePoorter		Madison Gas & Electric	MRO 3, 4, 5, 6										
2. Neal Balu		WPS Corporation	MRO 3, 4, 5, 6										
3. Terry Bilke		Midwest ISO Inc.	MRO 2										
4. Ken Goldsmith		Alliant Energy	MRO 4										
5. Jodi Jenson		Western Area Power Administration	MRO 1, 6										
6. Terry Harbour		MidAmerican Energy Company	MRO 1, 3, 5, 6										
7. Joseph Knight		Great River Energy	MRO 1, 3, 5, 6										
8. Alice Murdock		Xcel Energy	MRO 1, 3, 5, 6										
9. Scott Nickels		Rochester Public Utilties	MRO 4										
10. Dave Rudolph		Basin Electric Power Cooperative	MRO 1, 3, 5, 6										
11. Eric Ruskamp		Lincoln Electric System	MRO 1, 3, 5, 6										
11.	Group	Deborah Schaneman	Platte River Power Authority Maintenance Group	X		X		X					
Additional Member		**Additional Organization**	**Region** **Segment Selection**										
1. Scott Rowley		Platte River Power Authority	WECC 7										
2. Gary Whittenberg		Platte River Power Authority	WECC 7										
12.	Individual	James Starling	SCE&G	X		X		X	X				
13.	Individual	Rick Koch	Nebraska Public Power District	X		X		X					
14.	Individual	Kasia Mihalchuk	Manitoba Hydro	X		X		X	X				
15.	Individual	Kristina Loudermilk	ENOSERV								X		
16.	Individual	Wade Davis	Otter Tail Power	X									
17.	Individual	Alison Mackellar	Exelon Generation Company, LLC - Exelon Nuclear					X					

		Commenter	Organization	Industry Segment									
				1	2	3	4	5	6	7	8	9	10
18.	Individual	Benjamin Church	NextEra Energy Resources					X					
19.	Individual	Scott Berry	Indiana Municipal Power Agency				X						
20.	Individual	John E. Emrich	Indianapolis Power & Light Co.	X				X					
21.	Individual	Glenn Hargrave	CPS Energy	X		X		X					
22.	Individual	Darryl Curtis	Oncor Electric Delivery	X									
23.	Individual	Sandra Shaffer	PacifiCorp	X		X		X	X				
24.	Individual	Armin Klusman	CenterPoint Energy	X									
25.	Individual	Howard Gugel	Progress Energy	X		X		X					
26.	Individual	John Moraski	BGE	X		X							
27.	Individual	Dale Fredrickson	Wisconsin Electric			X	X	X					
28.	Individual	Frank Gaffney	Florida Municipal Power Agency, and its Member Cities as follows: New Smyrna Beach; City of Vero Beach; and Lakeland Electric	X		X			X				
29.	Individual	Russell C Hardison	TVA	X									
30.	Individual	Kirit Shah	Ameren	X		X		X	X				
31.	Individual	Huntis Dittmar	Lower Colorado River Authority	X									
32.	Individual	Brandy A. Dunn	Western Area Power Administration	X									

		Commenter	Organization	Industry Segment									
				1	2	3	4	5	6	7	8	9	10
33.	Individual	Robert Casey	Operations and Maintenance	X									
34.	Individual	Hugh Francis	Southern Company	X		X		X					
35.	Individual	Daniel J. Hansen	RRI Energy					X					
36.	Individual	Silvia Parada-Mitchell	Transmission Owner	X					X				
37.	Individual	Greg Mason	Dynegy					X					
38.	Individual	Michael Ayotte	ITC Holdings	X									
39.	Individual	Robert Waugh	Ohio Valley Electric Corp.	X				X					
40.	Individual	Brent Ingebrigtson	E.ON U.S.	X		X		X	X				
41.	Individual	Danny Ee	Austin Energy	X									
42.	Individual	John Alberts	Wolverine Power Supply Cooperative, Inc.	X		X		X					
43.	Individual	Willy Haffecke	City Utilities of Springfield, MO	X		X		X					
44.	Individual	Charles J. Jensen	JEA	X		X		X					
45.	Individual	Greg Rowland	Duke Energy	X		X		X	X				
46.	Individual	Bob Thomas	Illinois Municipal Electric Agency				X						
47.	Individual	Scott Barfield-McGinnis	Georgia System Operations Corporation			X	X						
48.	Individual	Jianmei Chai	Consumers Energy Company			X	X	X					
49.	Individual	Vladimir Stanisic	Ontario Power Generation					X	X				

		Commenter	Organization	Industry Segment									
				1	2	3	4	5	6	7	8	9	10
50.	Individual	James H. Sorrels, Jr.	AEP	X		X		X	X				
51.	Individual	Jason Shaver	American Transmission Company	X									
52.	Individual	Edward Davis	Entergy Services, Inc	X		X		X	X				
53.	Individual	W. Guttormson	Saskatchewan Power Corporation	X		X							
54.	Individual	Alice Murdock	Xcel Energy	X		X		X	X				
55.	Individual	Martin Bauer	US Bureau of Reclamation					X				X	

1. The SDT proposes to change the name of the draft standard from "Protection System Maintenance and Testing" to "Protection System Maintenance", and to include testing as one component of "Protection System Maintenance Program", which will be a defined term. Do you agree? If not, please explain in the comment area.

Summary Consideration: The majority of the respondents agreed with both the change in the name of the draft standard and with the definition of Protection System Maintenance Program. Some comments were offered, most of which were answered by explanation of the rationale of the SDT.

Organization	Yes or No	Question 1 Comment
US Bureau of Reclamation	No	1. The alteration of the program to include testing as a component does not add value to system reliability. The existing requirement can only be completed with procedures that some of the elements listed under the program. The proposed program is far too restrictive in the manner in which it requires specific actions and thereby excludes others. 2. The program element for monitoring is listed; however, the monitoring is intended to be used through an electronic subsystem and does not allow for observations by experienced technical staff. 3. Testing is listed; however, the definition is limited to the application of signals and precludes other procedures. 4. Further, the definition of Protection System proposed is a nested definition which tends to expand the number of devices covered (any device that has voltage and current sensing inputs) irrespective of their impact on the BPS.

Response: The SDT thanks you for your comments.

1. **Maintenance includes a number of actions, one of which is testing; inspections, etc are also part of maintenance. One option is to separately identify each type of activity, another is to combine the types of activities within the overall Maintenance activity and address the specific activity type where relevant. As for including some activities and excluding others, the listed activities are contemplated as minimum activities and do not preclude an entity from performing additional activities.**
2. **If a facility is attended, the observation of locally-alarmed conditions by on-site personnel, within the time intervals expressed in the monitoring attributes, can satisfy these requirements. Adequate documentation should be available that the facility is indeed attended, and that the on-site personnel observe the related items. See FAQ V-1-D (page 30)**
3. **Nothing is precluded; minimum activities are specified, and entities may use additional approaches.**
4. **This concern is addressed by the applicability of the standard, where the applicability is limited to "Protection Systems that are applied on, or are**

Organization	Yes or No	Question 1 Comment
designed to provide protection for the BES".		
Wolverine Power Supply Cooperative, Inc.	No	Wolverine Power has concern about the level of "prescription" in this standard draft. The intent of the standards is to define what, not how. This draft gets unnecessarily prescriptive in our opinion, particularly in the table
Response: The SDT thanks you for your comments. The SDT believes that the level of prescription within the standard is necessary to satisfy the guidance in FERC Order 693, and also to address observations from the Compliance Monitoring entities (the Regional Entities and NERC) that PRC-005-1 is excessively general. FERC Order 672 also specifies that NERC Standards should be clear and unambiguous. The SDT has therefore defined the minimum activities necessary to implement an effective PSMP.		
AEP	Yes	
American Transmission Company	Yes	
Austin Energy	Yes	
Bonneville Power Administration	Yes	
City Utilities of Springfield, MO	Yes	
Consumers Energy Company	Yes	
CPS Energy	Yes	
Detroit Edison	Yes	
Duke Energy	Yes	
Dynegy	Yes	
ENOSERV	Yes	
Entergy Services, Inc	Yes	

Organization	Yes or No	Question 1 Comment
Florida Municipal Power Agency, and its Member Cities	Yes	
Georgia System Operations Corporation	Yes	
Green Country Energy LLC	Yes	
Illinois Municipal Electric Agency	Yes	
Indiana Municipal Power Agency	Yes	
Indianapolis Power & Light Co.	Yes	
ITC Holdings	Yes	
Lower Colorado River Authority	Yes	
Manitoba Hydro	Yes	
Nebraska Public Power District	Yes	
NextEra Energy Resources	Yes	
Northeast Power Coordinating Council	Yes	
Ohio Valley Electric Corp.	Yes	
Oncor Electric Delivery	Yes	
Ontario Power Generation	Yes	
Operations and Maintenance	Yes	

Organization	Yes or No	Question 1 Comment
Otter Tail Power	Yes	
PacifiCorp	Yes	
Pepco Holdings Inc.	Yes	
Platte River Power Authority Maintenance Group	Yes	
Progress Energy	Yes	
Public Service Enterprise Group Companies	Yes	
RRI Energy	Yes	
Southern Company	Yes	
Transmission Owner	Yes	
TVA	Yes	
Western Area Power Administration	Yes	
Wisconsin Electric	Yes	
Xcel Energy	Yes	
FirstEnergy	Yes	Although we agree with the change in the title of the standard, as well as the proposed definition of "Protection System Maintenance Program", we feel that the definition could be clarified. With regard to "Restoration", which at present is described as "The actions to restore proper operation of malfunctioning components", it may be helpful to add examples of acceptable actions to restore operations, such as calibration, repair, replacement, etc.

Organization	Yes or No	Question 1 Comment
Response: The SDT appreciates your support and comments. An FAQ document is included that addresses your comment related to an example of acceptable operations to restore operations. See FAQ II-2-B. (page 5)		
JEA	Yes	Generally agree; however, some suggestions for possible changes: 1) change "associated communication systems necessary for correct operation of protective devices" to "protective relays", 2) add a PSMP glossary definition for an acceptable type of monitored alarm, either to the proposed "PSMP monitor" or another definition for "PSMP monitored and alarmed." The SDT did a good job of making the overall Protection System definition clearer.
Response: The SDT appreciates your support and comments. **1) "Protective relays" is too specific a term here; it excludes applications such as logic-based direct transfer trip that provides protective functions.** **2) The SDT disagrees that the proposed definition is necessary. Guidance on this issue is included in the FAQ. See FAQ V-1-A (page 28)**		
MRO NERC Standards Review Subcommittee	Yes	N/A
Exelon Generation Company, LLC	Yes	None
Saskatchewan Power Corporation	Yes	Saskatchewan would like clarification of what the expectations and rationale are for including Restoration in the PSMP. The other terms listed under the PSMP definition represent what we would consider as typical relay maintenance activities. We would typically consider Restoration as an Operational activity. The existing NERC standards seem to treat this as an Operator concern addressed in PRC-001 R2.1 and R2.2 (The Operator shall take corrective action as soon as possible). If Restoration is included in PRC-005 doesn't PRC-001 have to be modified as well to remove these references? Saskatchewan would also like clarification on the term upkeep. Is the standard prescriptive and mandate the application of the latest firmware upgrades within a defined period, or is it flexible and can upgrades be applied as the utility deems necessary?
Response FAQ II-2-B (page 5) explains that restoration is the "corrective activities necessary to assure that the component is returned to working order following the discovery of its failure or malfunction" and provides extensive discussion contrasting "restoration" in this context from "restoration" in a system operations context. Examples are also discussed. Note that the word, 'restoration' is capitalized in the definition, but this capitalization is for consistent format by capitalizing the first letter of each word in each bulleted phrase – the word was not capitalized to show that		

Organization	Yes or No	Question 1 Comment
the term is using the approved definition of 'Restoration.'		
SCE&G	Yes	The SDT is to be commended for developing a clear and well documented draft. Overall it provides a balanced view of Protection System Maintenance, and good justification for its maximum intervals.
Response: The SDT appreciates your support.		
Ameren	Yes	1. We commend the SDT for developing such a clear and well documented first draft. It generally provides a well reasoned and balanced view of Protection System Maintenance, and good justification for its maximum intervals. Our existing M&T Program has and continues to yield a very reliable BES with mostly similar intervals, though some are longer and others shorter. We strongly support the almost all of the applicability revision, which clarifies the boundary of NERC maintenance and testing oversight. 2. We question the addition of UFLS station DC Supply, auxiliary relays, and Generating facility system-connected station service transformers. Have these components been a significant source of problems leading to cascading outages? 3. The SDT also modifies the Protection System definition, mostly clarifying the boundaries. We generally agree except that we recommend adding "fault" before "interrupting devices".
Response: **1. The SDT appreciates your support and comments.** **2. The standard is not focused only on causes of "cascading outages"; it is focused on "Protection Systems that are applied on, or are designed to provide protection for the BES" and on maintenance of the UFLS systems. The components addressed in the comment are all part of the BES, or the UFLS. As for the DC supply to the UFLS, it is a component that is necessary for the UFLS to function properly. FAQ II-4-D (page 11) discusses what auxiliary tripping relays are actually included, and FAQ III-2-A (page 20) provides a discussion of station service (auxiliary) transformers and their inclusion in this standard.** **3. The "Interrupting devices" is a term that addresses the actions of UFLS, UVLS, and SPS, as well as the actions to clear faults.**		
Electric Market Policy	Yes	We commend the SDT for developing such a clear and well documented first draft. In general, it provides a well reasoned and balanced view of Protection System Maintenance.
Response: The SDT appreciates your support.		
SERC (PCS)	Yes	We commend the SDT for developing such a clear and well documented first draft. It generally provides a well reasoned and balanced view of Protection System Maintenance, and good justification for its maximum

Organization	Yes or No	Question 1 Comment
		intervals.
Response: The SDT appreciates your support		
AECI	Yes	
Puget Sound Energy	Yes	

2. Within Table 1a, Table 1b, and Table 1c, the draft standard establishes specific minimum maintenance activities for the various types of devices defined within the definition of "Protection System". Do you agree with these minimum maintenance activities? If not, please explain in the comment area.

Summary Consideration: Most of the respondents disagreed with the minimum maintenance activities to some degree or another. The disagreement ranged over the full spectrum of activities specified in the Tables, resulting in numerous changes to the standard in response to comments.

Organization	Yes or No	Question 2 Comment
ITC Holdings	No	1. (FAQ 3C) What is the technical justification for omitting insulation testing of the wiring for DC control, potential and current circuits between the station-yard equipment and the relay schemes? We feel this wiring is susceptible to transients which, over time, may compromise the insulation, and therefore should be tested. 2. 2. Table 1a (Page 6) Improve wording. Suggestion: "Verify proper functioning of the current and voltage circuits from the voltage and current sensing devices to the protective relay inputs" 3. On Page 6: The red light monitors trip circuit not only trip coil. With only one circuit going to three parallel single-pole trip coils a red light will not detect a single open trip coil. Is a station inspection that verifies the red light is "on" an acceptable activity? 4. On Page 9: The 3 month communications maintenance activities should say that the channel needs to be checked. For example: initiate a manual checkback test of the carrier system. 5. On Page 10: Not clear on level 2 monitoring attributes for protective relay component description. As written it notes two separate requirements which are ambiguous. We assume that all monitoring noted is required (internal self diagnosis and waveform sampling)? 6. On Page7: The standard should note that battery testing must include all batteries that are used in protective relay systems (for example pilot wire batteries).
Response: The SDT thanks you for your comments. **1. The SDT does not believe that insulation testing needs to be included within the minimum required maintenance activities; the SDT is not aware of a body of evidence that suggests that these tests should be included as a requirement. The proposed standard does not prevent an entity from including such tests in its program if its experience indicates that such testing is needed.** **2. The SDT has modified the standard in consideration of your suggestion and the suggestions of others as shown:**		

Organization	Yes or No	Question 2 Comment
Verify proper functioning of the current and voltage circuit signals necessary for Protection System operation from the voltage and current sensing devices to the protective relays. **3. The SDT has modified the standard to remove the requirement cited in this comment as shown below:** **4. The SDT has modified the standard in consideration of your suggestion as shown below:** Verify that the Protection System communications system is functional. **See FAQ II-6-B for suggestions related to methodology.** **5. Yes. For level 2 monitoring, all attributes must be satisfied. The SDT has modified the standard to clarify as shown below:** Includes: • Internal self diagnosis and alarm capability • Alarm must assert for power supply failures. • Input voltage or current waveform sampling three or more times per power cycle • Conversion of samples to numeric values for measurement calculations by microprocessor electronics that are also performing self diagnosis and alarming. **6. The proper functioning of such batteries will be addressed by the verification and monitoring of the communications system, and by addressing maintenance correctable issues related to the communications system.**		
Green Country Energy LLC	No	1) Protection System Control Circuitry (Trip Circuits) (except for UFLS or UVLS) also The maintenance activity causes excessive breaker operation, and the intrusive nature increases the risk of subsequent misoperations on operating units. System configuration of many plants will require an extensive interruption of total plant production to complete the test. 2) Protection System Control Circuitry (Trip Circuits) (UFLS or UVLS systems only) The maintenance activity causes excessive breaker operation, and the intrusive nature increases the risk of subsequent misoperations on operating units. System configuration of many plants will require an extensive interruption of total plant production to complete the test.
Response: The SDT thanks you for your comments. **1. The overall Protection System Control Circuitry can be addressed in segments, as long as all portions are verified or tested as required. Depending on the arrangement of the DC control circuit, it may be necessary to only trip the breaker itself once. See FAQ II-4-E. (page 11)** **2. The overall Protection System Control Circuitry can be addressed in segments, as long as all portions are verified or tested as required.**		

Organization	Yes or No	Question 2 Comment
Depending on the arrangement of the DC control circuit, it may be necessary to only trip the breaker itself once. See FAQ II-4-E. (page 11)		
Public Service Enterprise Group Companies	No	1) Table 1a Protection System Control Circuitry (Trip Circuits) (UFLS/UVLS Systems Only). Currently, we test our UFLS relays on a 2 year maintenance interval. We test the relays and associated DC circuitry up to the DC lockout relays. It would require extraordinary effort to trip the breakers directly when performing these tests. Usually, each UFLS relay will trip several feeder breakers. This requirement states that we need to check the trip coil for each of those breakers each time we perform relay maintenance. This will add an unreasonable amount of time and effort to reliably switch out several 4kV or 13kV feeders every time we perform UFLS maintenance. For UFLS and UVLS schemes, we feel the requirement for DC control testing should not go past the lockout relay. The standard says to perform trip checks at the same time as UF maintenance. We test the relays on a 2 year interval right now. It is unreasonable to perform trip checks this often. The trip checks should follow a 6 year span (or longer) just like the BES equipment. 2) Table 1a DC supply. The 18 month inspection requires a measurement of specific gravity and temperature. We believe that if a battery owner opts to perform an 18 month ohmic value test, this combined with the cell voltage readings and continuity tests will give a good indication of battery health. We do not feel that the measurement of specific gravity is required in conjunction with the tests performed above.
Response: The SDT thanks you for your comments. **1. The SDT has modified the standard in consideration of your comment as shown below:** Perform a complete functional trip test that includes all sections of the Protection System control and trip circuits, including all electromechanical trip and auxiliary contacts essential to proper functioning of the Protection System, except that verification does not require actual tripping of circuit breakers or interrupting devices. **See FAQ II-8-D (page 19) for a discussion on this.** **2. The SDT has modified the standard in consideration of your comment and this has been deleted.**		
Wisconsin Electric	No	1. Page 7 Station DC Supply (Batteries): The activity to verify proper electrolyte level should only apply to unstaffed (unmanned) stations; checking battery electrolyte levels is routinely done in generating stations, which are staffed with personnel continuously (24 x 7). In addition, the three activities listed here with a 3 month interval for batteries (electrolyte, voltage, grounds) should NOT require documentation for compliance purposes. It should be sufficient that these routine and recurring activities (every 3 months) are identified in the Maintenance Plan. Otherwise the administrative burden to provide documentation will become excessive and counterproductive to assuring BES reliability. 2. Page 7 Station DC Supply (Batteries): The 18 month interval includes an activity to verify the battery charger equalize voltage. This activity is normally done only when the bank is load tested. Therefore the

Organization	Yes or No	Question 2 Comment
		activity to verify equalize voltage of a charger should have a 6 year interval along with the other battery charger activities to verify full rated current and current-limiting. 3. Page 9 Communications Equipment: Similar to #1 above, the activity to verify monitoring and alarms should NOT require documentation in order to demonstrate compliance. Having these routine 3 month activities in the Maintenance Plan is sufficient. This needs to be clarified in the standard. Also, this requirement should be re-worded to refer to generating stations also, not just substations. 4. Page 11 Station DC Supply (Batteries): Like #1 above, the similar requirement in Table 1b for verifying battery electrolyte levels should be revised to indicate that documentation is NOT required. 5. Page 6 Prot System Control Circuitry: Like #1 above, the 3 month activity to verify continuity of breaker trip circuits is fine, but there should be no requirement to document the readings or observations; it is sufficient that this activity be addressed in the Maintenance Plan, especially for staffed generating stations. 6. Page 6 Prot System Control Circuitry: For the 6 year activity to "perform a functional trip test...": is this a requirement to actually trip the circuit breaker ? If yes, this should be stated clearly in the Maintenance Activity description. 7. We are concerned that the Maintenance Activities are not appropriate for certain equipment. The RFC definition of Bulk Electric System includes any protection equipment that can trip a BES facility independent of voltage level. As an LSE, this includes distribution-level equipment that was not designed to the same level of redundancy as Transmission equipment. Complying with the requirements for control circuitry functional testing and current sensing device testing will actually decrease system reliability since this often cannot be accomplished without requiring outages to major distribution system components and/or temporarily breaking protection circuits. We propose that this type of testing on distribution systems which fall under the definition of BES Protection Systems should be addressed separately from the rest of the BES Protection Systems in this standard. The intervals and/or maintenance activities should reflect the differences in how these distribution protection systems are designed and operated.

Response: The SDT thanks you for your comments.

1. **The SDT has modified the standard in consideration of your comment. The revised standard requires the responsible entity to "check" the following every 3 calendar months:**
   - Electrolyte level (excluding valve-regulated lead acid batteries)
   - Station dc supply voltage
   - Unintentional grounds

2. The SDT has modified the standard in consideration of your comments regarding DC supply and the reference to "equalize voltages" has been

Organization	Yes or No	Question 2 Comment
removed **3. The word "substation" has been removed from this requirement. Documentation of completion of required maintenance activities will likely be necessary to demonstrate compliance.** **4. The SDT has modified the standard in consideration of your comments to require checking of electrolyte levels, instead of verification. Documentation of completion of required maintenance activities will likely be necessary to demonstrate compliance.** **5. The SDT has modified the standard to remove the requirement cited in your comment.** **6. Yes. The intent here is that the entire dc control circuit, including the breaker trip coil, be exercised. This was changed to read as follows:** Perform a complete functional trip test that includes all sections of the Protection System control and trip circuits, including all electromechanical trip and auxiliary contacts essential to proper functioning of the Protection System. **7. As established in 4.2.1, this standard applies to all Protection Systems that are "Protection Systems that are applied on, or are designed to provide protection for the BES".**		
Exelon Generation Company, LLC	No	1. Minimum maintenance activities should be on a yearly multiplier verses a monthly multiplier. Nuclear generating stations are typically on an 18-month or 24-month refueling cycle. The draft standard does not take into consideration a nuclear generators refueling cycle. Specifically, most Boiling Water Reactors (BWRs) are on a 24-month refueling cycle and may run continuously between refueling outages. Performing maintenance on-line puts the generating unit at risk without any commensurate increase in reliability to the bulk electric system. 2. All maintenance activities should include a "grace" period to allow for changes to a nuclear generator's refueling schedule and emergent conditions that would prevent the safe isolation of equipment and/or testing of function. "Grace" periods align with currently implemented nuclear generator's maintenance and testing programs. 3. Activities that begin with "verify" should be modified to "Validate…are/is within acceptable limits. Initiate corrective actions as required." For example, some levels of DC grounds are acceptable based on circuit design and component installation. Troubleshooting or ground isolation may increase the risk to the system depending on ground magnitude and conditions. 4. Please provide clarification on "verify that no dc supply grounds are present" most stations have some level of ground current. Should this be interpreted to be a measure of resistance or current values? Suggest rewording to say "Check and record unintentional battery grounds" 5. "Verify Station Battery Chargers provides the correct float and equalize voltage" should be deleted. Equalizing a battery is a maintenance function and should only be performed as needed. Suggest rewording

Organization	Yes or No	Question 2 Comment
		to say "Check and record charger output current and voltage." 6. Activities associated with Battery Charger performance should be deleted. The ability of the Battery Charger to maintain the battery at full charge state is verified by checking proper "float voltage." The ability to provide full rated current only affects the ability to recharge a battery AFTER an event has occurred. 7. In Table 1a does the requirement to "verify proper electrolyte level" refer to all batteries or only a sampling? Current practice is to use the "pilot cell" as the monitoring cell as this cell is usually the least healthy of the battery bank from a specific gravity and/or voltage standpoint. If the pilot cell continues to degrade then the other batteries will be monitored more often. Suggest rewording to "Check electrolyte level." 8. In Table 1a the 18-month requirement to measure that the specific gravity and temperature of each cell is within tolerance is "where applicable" what does "where applicable" mean? 9. For the Station dc supply (battery is not used) 18-month interval should this be interpreted that it is just the battery charger with no attached battery? Or a dc supply system that does not contain a battery? 10. Table 1a Station dc supply 18-month interval to verify cell-to-cell and terminal connection resistance is within "tolerance" should be revised to say "tolerance or acceptable limits." 11. Table 1a Station dc supply (that has as a component valve regulated lead-acid batteries) should provide an additional optional activity for "Total replacement of battery at an interval of four (4) years" in lieu of not conducting performance or service capacity test at maximum maintenance interval.

Response: The SDT thanks you for your comments.

1. The activities that are on an interval less than one calendar year are all “inspection” type activities, rather than “testing” activities. The SDT requests more specificity as to your concerns.

2. The SDT considered this issue when developing the intervals, and realizes that some entities may need to perform certain maintenance activities more frequently to assure that the activities are performed within the required intervals. Specifically, for generation facilities, there would seem to be numerous opportunities within the 6-year or longer intervals to perform the required maintenance during a scheduled plant outage, and maintenance with shorter intervals can be characterized as non-intrusive maintenance, more of an inspection than anything else; the SDT believes that this maintenance can be done on-line. The SDT is concerned that a “grace period”, if permitted, would be used to establish a de-facto longer interval, and that the established intervals would thus not be measurable. Additionally, FERC Order 693 directed that NERC establish maximum maintenance intervals, and allowing for a “grace period” would not conform to this directive. Please refer to Section 8.4 of the Supplementary Reference Document (page 13) and FAQ IV-2-D (page 23) for a discussion on this issue.

3. The SDT has modified the standard and Frequently Asked Questions document (See FAQ II-5-I, page 15) in consideration of your comments about dc grounds.

4. The SDT has modified the standard and Frequently Asked Questions document (See FAQ II-5-I, page 15) in consideration of your comments about

Organization	Yes or No	Question 2 Comment
no dc supply grounds being present. The language in the standard was changed to: Check for unintentional grounds **5. The SDT has modified the standard in consideration of your comments – the phrase, "equalize voltages," was deleted** **6. The performance of the battery charger is critical to the performance of the protection system. The SDT has modified the standard to simplify the requirements related to maintenance of the battery charger.** **7. The SDT has modified the standard in consideration of your comments. The Maintenance Activity related to electrolyte level of batteries has been changed from "verify proper" to "check" electrolyte levels. This Maintenance Activity refers to every individual cell in a non-VLRA station battery, similar to recommendations in the relevant IEEE Standards.** **8. The SDT has modified the standard in consideration of your comments. The requirement to measure that the specific gravity and temperature of each cell is within tolerance is "where applicable" has been deleted.** **9. The FAQ II-5-A (page 12) addresses your question concerning "Station dc supply (battery is not used)" by explaining that "a Station dc supply where a battery is not used" is a situation where another energy storage technology besides a battery is used prevent loss of the station dc supply when ac power to the station dc supply is lost.** **10. The SDT has modified the standard in consideration of your comments regarding cell-to-cell and terminal connection resistance – the phrase, "within tolerance" was deleted – and the requirement was subdivided to clarify that the entity must "verify battery terminal connection resistance and verify battery cell-to-cell connection resistance."** **11. The SDT believes that the maintenance activities specified in Table 1a for VRLA batteries are necessary to assure that the station battery will perform reliably and that replacement of the battery every four years in lieu of such testing would not provide such assurance. The SDT is providing the option of either capacity testing (every three years) or measuring individual cell/unit ohmic values (every three months) and trending the test results against the station battery's baseline to allow entities to choose which of these activities best address their facilities. Total replacement of a VRLA battery with a properly-performing new battery, 3 calendar years after installation of the original battery, is in compliance with Table 1a of this standard. See FAQ IV-2-A (page 22) & IV-2-B (page 23) for a discussion about commissioning tests and how they relate to establishing a baseline.**		
US Bureau of Reclamation	No	1. The basis for developing the maintenance intervals was adequately explained. It is understood that FERC would like uniform intervals; the intervals do not recognize the tremendous variation in installation and equipment and possibly manufacturer recommendation. Point in fact is the interval for listed for electromechanical relays. Some of these relays must be calibrated every year or three years on the outside. Relays that have a history of stable performance based on consistently good test results. 2. The intervals for battery maintenance are not reasonable. The capacity testing at 3 years is higher than the 5 year which battery manufactures require.
Response: The SDT thanks you for your comments. **1. The proposed standard does not prevent an entity from including such tests in their program if their experience has indicated that such testing is**		

Organization	Yes or No	Question 2 Comment
needed. **2. The 3-year capacity test is specifically for Valve Regulated Lead-Acid batteries (VRLA); Vented Lead-Acid batteries require a 6-year capacity test. Due to the failure mode and designed service life of Valve Regulated Lead-Acid (VRLA) batteries compared to a Vented Lead-Acid batteries, the SDT believes that extending capacity testing of a VRLA battery beyond the maximum maintenance interval of 3 calendar years in Table 1a cannot be justified regardless of what the battery manufacturers recommend.**		
MRO NERC Standards Review Subcommittee	No	A. In the tables, the term “verification” should be switched with “check”. B. The verification activities include testing for “specific gravity” in batteries. Since “impedance testing” will give you the same results or similar results; revise the tables to reflect this, as well. C. Another question deals with the table title verbiage. Table 1a and 1c are labeled as Protection Systems, while Table 1b is Protection System Components. One could interpret table 1c as saying that if any one component of the protection system in question is not in compliance with level 3 monitoring stipulations, then every component must be degraded to level 2 monitoring as so forth. This needs to be clarified. D. Some activities, such as complete functional testing, could lead to reduced levels of reliability, because [1] it requires removing elements of the transmission system from service and [2] it requires performing tests that are inherently prone to human errors. The MRO NSRS does not believe the perceived benefits justify the anticipated costs. E. In the tables, under Table 1a and Protection system communications equipment and channels, a technical justification should be provided to show that performance and quality channel testing would result in the reduction of regional disturbances and blackouts. Quality and performance testing is subjective. Subjective tests are inherently poor compliance measures. The requirements to measure, document, store, and prove channel quality data is a poor use of limited compliance resources. F. In the tables, under Table 1a and Station DC supply (and anywhere else), equalize (battery) voltages should be eliminated. Equalizing battery voltages reduces battery life and do not provide a significant gain in overall system reliability to offset the loss of battery life. G. In the tables, under Table 1a and Station DC supply (and anywhere else), delete the reference to measuring the fluid temperature of “each cell”. A technical basis should be demonstrated that shows why individual cell fluid temperature measurement would reduce the occurrence of regional disturbances. If fluid temperature measurement remains in the standard, a single fluid temperature measurement per battery bank should be sufficient to demonstrate that the battery bank was performing within normal parameters. The compliance burden to add fluid temperature measurements for each cell is unwarranted and reduces compliance personnel resources that could be utilized on more important reliability activities.

Organization	Yes or No	Question 2 Comment
Response: The SDT thanks you for your comments. **A. The SDT has modified the tables in consideration of your comments regarding "verification" vs. "checking".** **B. The SDT has modified the standard in consideration of your comments – the term, "specific gravity" is not used in the revised standard** **C. The SDT has modified Tables 1a and 1c in consideration of your comments. The subheading of Table 1a and 1c were modified, replacing, "Systems" with "System Components."** **D. To minimize system impact of such maintenance and possible errors, the maintenance necessarily should be scheduled at a time that minimizes the risks.** **E. Many utilities have long history that emphasizes that maintenance of communications systems is critical to assuring the proper performance of these systems. The intervals were determined based on the experiences of SDT and NERC System Protection and Task Force members. Additionally, this standard is not focused only on avoiding regional disturbances or blackouts, but instead on overall Protection System reliability. See Supplementary Reference Document, Section 15.5 (page 23) and FAQ II-6-D (page 17).** **F. The SDT has modified the standard in consideration of your comments. The requirement to "equalize battery voltages" was removed from the revised standard.** **G. The SDT has modified the standard in consideration of your comments and all references to measuring "temperature" have been removed from the revised standard.**		
CenterPoint Energy	No	a. CenterPoint Energy believes the approach taken by the SDT is overly prescriptive and too complex to be practically implemented. The inflexible minimum "maintenance activities" approach fails to recognize the harmful effects of over-maintenance and precludes the ability of entities to tailor their maintenance program based on their configurations and operating experience. In particular, the loss of maintenance flexibility embodied in this approach would have perverse consequences for entities with redundant systems. Entities with redundant systems have less need for maintenance of individual components (due to redundancy) yet have twice the maintenance requirements under the minimum "maintenance activities" approach. For example, Table 1A calls for performing a specific gravity test on "each cell" of vented lead-acid batteries. CenterPoint Energy believes such a requirement is dubious for entities that do not have redundant batteries, and absurd for entities that do. CenterPoint Energy has installed redundant batteries in most locations and has had an excellent operating history with batteries by using a combination of internal resistance testing and specific gravity testing of a single "pilot cell". This practice, combined with DC system alarming capability, has worked well. b. CenterPoint Energy is opposed to approving a standard that imposes unnecessary burden and reliability risk by imposing an overly prescriptive approach that in many cases would "fix" non-existent problems. To clarify this last point, CenterPoint Energy is not asserting that maintenance problems do not exist. However,

Organization	Yes or No	Question 2 Comment
		requiring all entities to modify their practices to conform to the inflexible approach embodied in this proposal, regardless of how existing practices are working, is not an appropriate solution. Among other things, requiring entities to modify practices that are working well to conform to the rigid requirements proposed herein carries the downside risk that the revised practices, made solely to comply with the rigid requirements, degrade reliability performance. c. Arguably, an entity could possibly return to its existing practices, if those practices are working well, by navigating through the complex set of options and supporting documentation that the SDT has crafted in this proposal. However, most entities have an army of substation technicians with various ranges of experience to perform maintenance on protection systems and other substation components. It is unrealistic to expect most entities making a good faith effort to comply with this proposal to have a full understanding throughout the entire organization of all the nuances crafted into this complex proposal. d. For the reasons outlined above, CenterPoint Energy does not agree with the proposal to specify minimum maintenance activities. However, if the majority of industry commenters agree with the SDT's proposal, CenterPoint Energy has concerns about some of the proposed tasks. For Protection System control circuitry (trip circuits), Table 1A calls for performing a complete functional trip test. The "Frequently-asked Questions" document states that this "may be an overall test that verifies the operation of the entire trip scheme at once, or it may be several tests of the various portions that make up the entire trip scheme". Such a requirement creates its own set of reliability risks, especially when monitoring already mitigates risks. CenterPoint Energy is concerned with this standard promoting an overall functional trip test for transmission protection systems. This type of testing can negatively impact reliability with the outages that are required and by exposing the electric system to incorrect tripping. CenterPoint Energy views overall functional trip testing as a commissioning task, not a preventive maintenance task. CenterPoint Energy performs such testing on new stations and whenever expansion or modification of existing stations dictates such testing. Overall, CenterPoint Energy recommends minimizing, to the extent possible, maintenance activities that disturb the protection system; that is, placing the protection system in an abnormal state in order to perform a test. e. For Protection System control circuitry (breaker trip coils only), Table 1A calls for verifying the continuity of the trip circuit every 3 months. CenterPoint Energy is not sure what would be the expected task to meet this requirement (it is not addressed in the "Frequently-asked Questions" document).
Response: The SDT thanks you for your comments. **a) The SDT believes that the level of prescription within the standard is necessary to satisfy the guidance in FERC Order 693, and also to address observations from the Compliance Monitoring entities (the Regional Entities and NERC) that PRC-005-1 is excessively general. FERC Order 672 also specifies that NERC Standards should be clear and unambiguous. Regardless of the level of redundancy provided, all components addressed by this standard must be maintained in accordance with the requirements of the standard. The SDT has therefore defined the minimum activities necessary to implement an effective PSMP. The SDT has modified the standard in consideration of your comments concerning performing a specific gravity test**		

Organization	Yes or No	Question 2 Comment
and the revised standard does not require a specific gravity test. **b)) The SDT believes that the level of prescription within the standard is necessary to satisfy the guidance in FERC Order 693, and also to address observations from the Compliance Monitoring entities (the Regional Entities and NERC) that PRC-005-1 is excessively general. FERC Order 672 also specifies that NERC Standards should be clear and unambiguous. The opportunities in R3 provide additional flexibilities for entities which desire them.** **c) For those entities which wish the least complex approach, a pure time-based program, using R1, R2, and R4, with Table 1a provides the simplest approach to meeting this standard.** **d) The SDT believes that functional trip testing is a key component of an effective PSMP.** **e) See the Supplemental Reference Document, Section 15.3 (page 22) for a discussion on this topic.**		
NextEra Energy Resources	No	a. Tables 1a, 1b & 1c should offer as an alternative, measuring battery float voltages and float currents in lieu of measuring specific gravities as described in Annex A4 of IEEE Std 450-2002. b. Inspection of CVT gaps, MOVs and gas tubes should be added to the communications equipment time based maintenance tables. Failure of the CVT protective devices may cause failure of the Protection System. c. Maintenance Activities for UVLS or UFLS station dc supplies shows “Verify proper voltage of dc supply”. Does this imply that, except for voltage readings of the dc supply, distribution battery banks are not maintained? d. Why does the Maintenance Activities for UVLS or UFLS relays state that verification does not require actual tripping of circuit breakers? e. Please clarify the Maintenance Activities for Voltage and Current Sensing Devices. Must voltage, current and their respective phase angles be measured at each discrete electromechanical relay? f. NextEra Energy concurs with other entities comments concerning this question: This entity believes the approach taken by the SDT is overly prescriptive and too complex to be practically implemented. The inflexible “minimum maintenance activities” approach fails to recognize the harmful effects of over-maintenance and precludes the ability of entities to tailor their maintenance program based on their configurations and operating experience. In particular, the loss of maintenance flexibility embodied in this approach would have perverse consequences for entities with redundant systems. Entities with redundant systems have less need for maintenance of individual components (due to redundancy) yet have twice the maintenance requirements under the “minimum maintenance activities” approach. For example, Table 1A calls for performing a specific gravity test on “each cell” of lead acid batteries. Our company believes such a requirement is dubious for entities that do not have redundant batteries, and absurd for entities that do. We have installed redundant batteries in most locations and have had an excellent operating history with batteries

Organization	Yes or No	Question 2 Comment
		by using a combination of internal resistance testing and specific gravity testing of a single "pilot cell". This practice, combined with DC system alarming capability, has worked well. We are opposed to approving a standard that imposes unnecessary burden and reliability risk by imposing an overly prescriptive approach that in many cases would "fix" non-existent problems. To clarify this last point, we are not asserting that maintenance problems do not exist. However, requiring all entities to modify their practices to conform to the inflexible approach embodied in this proposal, regardless of how existing practices are working, is not an appropriate solution. Among other things, requiring entities to modify practices that are working well to conform to the rigid requirements proposed herein carries the downside risk that the revised practices, made solely to comply with the rigid requirements, degrade reliability performance. Arguably, an entity could possibly return to its existing practices, if those practices are working well, by navigating through the complex set of options and supporting documentation that the SDT has crafted in this proposal. However, like many entities, we have an army of substation technicians with various ranges of experience to perform maintenance on protective systems and other substation components. It is unrealistic to expect most entities making a good faith effort to comply with this proposal to have a full understanding throughout the entire organization of all the nuances crafted into this complex proposal. For the reasons outlined above, we do not agree with the proposal to specify minimum maintenance activities. However, if the majority of industry commenters agree with the SDT's proposal, we have concerns about some of the proposed minimum tasks. For Protection System control circuitry (trip circuits), Table 1A calls for performing a complete functional trip test. The "Frequently-asked Questions" document states that this "may be an overall test that verifies the operation of the entire trip scheme at once, or it may be several tests of the various portions that make up the entire trip scheme". Such a requirement creates its own set of reliability risks, especially when monitoring already mitigates risks. We are concerned with this standard promoting an overall functional trip test for transmission Protection Systems. This type of testing can negatively impact reliability with the outages that are required and by exposing the electric system to incorrect tripping. Our company views overall functional trip testing as a commissioning task, not a preventive maintenance task. We perform such testing on new stations and whenever expansion or modification of existing stations dictates such testing.

Response: The SDT thanks you for your comments.

a. The SDT has modified the standard in consideration of your comments. All references to measuring specific gravities have been removed from the revised standard – and for Table 1a for station dc supply, the language was revised to require, "Verify float voltage of battery charger."

b. Power line carrier channels are made up of many components that must be maintained on a periodic basis. This standard indicates that adequate maintenance and testing must be done to keep the performance of the channel at a level that meets the requirements of the relay system. The determination of specific maintenance activities is the responsibility of the Entity.

c. This standard limits the maintenance requirements of distribution system batteries to those used for UVLS and UFLS and constrains those requirements to verification of proper voltage. If "distribution system" batteries are used for any other BES Protection System applications, they must

Organization	Yes or No	Question 2 Comment
be maintained according to the other requirements of this standard. **d. The SDT believes that the UFLS scheme is predominantly based within the distribution sector. As such, there are many circuit interrupting devices that will be operating for any given under-frequency event that require tripping for that event. A failure in the tripping-action of a single distribution breaker will be far less significant than, for example, any single Transmission Protection System failure such as a failure of a Bus Differential Lock-Out Relay. While many failures of these distribution breakers could add up to be significant, distribution breakers are operated often on just fault clearing duty and therefore the distribution circuit breakers are operated at least as frequently as any requirements that might have appeared in the standard.** **e. The requirement is that the proper voltage, current, and phase angle must be delivered to each respective relay. The standard does not prescribe methodology. See FAQ II-3-A (page 8) for further discussion.** **f. The SDT believes that the level of prescription within the standard is necessary to satisfy the guidance in FERC Order 693, and also to address observations from the Compliance Monitoring entities (the Regional Entities and NERC) that PRC-005-1 is excessively general. FERC Order 672 also specifies that NERC Standards should be clear and unambiguous. Regardless of the level of redundancy provided, all components addressed by this standard must be maintained in accordance with the requirements of the standard. The SDT has therefore defined the minimum activities necessary to implement an effective PSMP. The SDT has modified the standard in consideration of your comments concerning specific gravity testing.**		
E.ON U.S.	No	1. Capacity or AC impedance only needs to be done to determine service life and therefore periodic testing of station DC supply does not seem necessary or prudent. 2. If a company checks overall battery bank voltages quarterly then periodic testing of the battery bank charger should not be required.
Response: The SDT thanks you for your comments. **1. Capacity or Internal Ohmic testing must be periodically performed at the Maximum Maintenance Intervals in Table 1 to verify that a lead acid battery can perform as designed. Periodic testing to ensure that a battery can perform as designed is necessary to ensure that a battery is capable of being a dc source to the station dc loads when required. If a battery fails to perform as designed during test before its designed service life is reached it must be replaced regardless of how many years of service are left on its warranty or its engineered service life.** **2. Proper functioning of the battery charger is critical to proper performance of the DC supply. The SDT has modified the standard to simplify the battery charger maintenance requirements.**		
City Utilities of Springfield, MO	No	1. CU has concern over the battery charger testing requirements. Per the charger manufacturers recommendations there is no reason to test the chargers as proposed in PRC-005-2. It is their opinion that the chargers are self diagnostic and do not require these tests (full load current and current limiting tests). The charger O&M manuals do not even provide instructions for such tests as optional. Therefore, CU takes exception to this requirement and suggests that battery chargers be maintained and tested in accordance with manufacturer's recommendations.

Organization	Yes or No	Question 2 Comment
		2. Additionally, CU is concerned with the wording in Table 1a concerning Protection system communication equipment and channels. We are unsure what the maintenance activity actually means. If this is an unmonitored system, how can you verify the condition of the communication system? Is the standard referring to local monitoring such as enunciators? Please provide clarification.
Response: The SDT thanks you for your comments. 1. **The SDT has modified the standard in consideration of your comments. If the battery charger is self diagnostic, it may qualify for Table 1b or Table 1c.** 2. **FAQ II-6-A (page 16) provides an extensive discussion about various methods to test communications systems.**		
Florida Municipal Power Agency, and its Member Cities	No	1. FMPA does not believe that maintenance of each UFLS / UFLS systems are as important as maintenance of BES protection systems. The fundamental reason is that delayed or uncleared faults on the BES can cause system "instability, uncontrolled separation, and cascading outages"; therefore, BES protection systems are very important; however, if a small percentage of UFLS / UVLS relays mis-operate as a result of a frequency or voltage event, the impact of the mis-operation is much smaller, if even measurable. As a result, FMPA believes that the emphasis of the maintenance activities ought to be placed on those systems that can have the most impact on what the standards are all about, as Section 215(a)(4) of the Federal Power Act says, "avoiding instability, uncontrolled separation, and cascading outages". As a result, FMPA believes that full functional testing, while important for BES protection systems, is not necessary for UFLS and UVLS systems (Table 1a, page 6 and Table 1b, page 11). Because most UFLS / UVLS are on radial distribution feeders, such testing will cause outages to customers fed on radial distribution circuits and transmission lines without sufficient cause, in other words, the maintenance itself will reduce the reliability the customer experiences. In addition, distribution tripping circuits are more regularly exercised by distribution faults than are transmission tripping circuits; therefore, full functional testing of distribution tripping circuits is far less valuable than testing trip circuits of transmission elements which are exercised less frequently due to actual system events. 2. FMPA is confused with the wording of Table 1a, page 6, row 3 that talks about breaker trip coils. In the "Type of Component" column, the subject says "Breaker Trip Coils Only (except for UFLS or UVLS)", yet the maintenance activity described states "Verify the continuity of the breaker trip circuit including trip coil". These two statements are inconsistent because the first statement limits the applicability to just the trip coil and the second statement goes beyond the trip coil. And, FMPA believes the second statement should only apply to the trip coil, e.g., the second statement should say: "Verify the continuity of the trip coil". In addition, the parenthetical is confusing, is it meant to say that the continuity of the trip coil only needs to be verified when the breaker operates during the 3 month interval, or that the intended continuity check is from the relay contacts through the trip coil, and not from the relay contacts back to the

Organization	Yes or No	Question 2 Comment
		batteries? 3. FMPA is also confused concerning station DC supply testing. There are multiple rows in Table 1a concerning various types of testing for various types of batteries and chargers that do not exclude UVLS and UFLS, yet on page 8, on the bottom row, the row is exclusive to UVLS and UFLS yet overlaps other rows discussing station DC supply testing. Is it intended that the other rows that are silent as to what they apply to exclude UVLS and UFLS? FMPA believes that should be the case. The same comment applies to Table 1b. 4. FMPA also has concern over the battery charger testing requirements. Per the charger manufacturers recommendations there is no reason to test the chargers as proposed in PRC-005-2. It is their opinion that the chargers are self diagnostic and do not require these tests (full load current and current limiting tests). The charger O&M manuals do not even provide instructions for such tests as optional. Therefore, FMPA takes exception to this requirement and suggests that battery chargers be maintained and tested in accordance with manufacturer's recommendations
Response: The SDT thanks you for your comments. **1. The SDT believes that UFLS and UVLS maintenance needs to be prescriptive for the following reasons:** **a. PRC-008-0 and PRC-011-0 today require maintenance of UFLS and UVLS equipment.** **b. FERC Order 693 directs NERC to develop maximum allowable intervals for UFLS and UVLS equipment, and recommends combining PRC-005-1, PRC-008-0, PRC-011-0, and PRC-017-0.** **The objectives are not constrained to limiting "instability, uncontrolled separation, and cascading outages", but instead address overall Protection System reliability. The standard has, however, been modified to remove the requirement that the breakers actually be tripped for UFLS and UVLS functional trip testing.** **2. The SDT has modified the standard to remove the requirement cited in your comments.** **3. The SDT has modified the standard to clarify that the only DC Supply requirement relevant to UVLS and UFLS is to verify the DC supply voltage in consideration of your comments.** **4. The SDT has modified the standard in consideration of your comments. If the battery charger is self diagnostic, it may qualify for Table 1b or Table 1c.**		
Indiana Municipal Power Agency	No	IMPA does not agree with the battery charger testing requirements. Per the battery charger manual, the manufacturer sets the current limit at the factory, and it only needs to be adjusted if a lower current limit is desired. The manufacturer gives directions on how to lower the current limiter, and the directions seem to be for this purpose only (not for the sole purpose of performing a current limiter test). The manufacturer also

Organization	Yes or No	Question 2 Comment
		does not give directions on how to perform a full load current test and does not give any recommendation to the user that such test is needed. IMPA believes that both of these maintenance items are not needed to maintain the battery charger and that only the manufacturer's recommendations on maintenance and testing need to be followed.
Response: The SDT thanks you for your comments. The performance of the battery charger is critical to the performance of the protection system. The SDT has modified the standard to simplify the requirements related to maintenance of the battery charger.		
FirstEnergy	No	In general we agree with the maintenance activities, except for the specific gravity and temperature testing included in the "Station dc Supply (that has as a component any type of battery)" of the tables 1a and 1b. We only perform this testing at nuclear facilities for insurance requirements. In transmission substation applications it has been eliminated due to the variability of results due to recharging/equalizing, water addition, temperature correction requirements, etc. In the Supplementary reference, section 15.4 Batteries and DC Supplies, third paragraph, the SDT indicates these tests are recommended in IEEE 450-2002 to ensure that there are no open circuits in the battery string. This is essentially a continuity check of the battery string. In the fourth paragraph, the SDT states that "continuity" was introduced into the standard to allow the owner to choose how to verify continuity of a battery set by various methods, and not to limit the owner to the two methods recommended in the IEEE standards."The SDT in Table 1a, the Maintenance Activity "Verify continuity and cell integrity of the entire battery", and in Table 1b, the Maintenance Activity "Verify electrical continuity of the entire battery". Based on the information in the Supplementary reference, the owner has to choose a method to verify continuity and the measurement of specific gravity and cell temperatures could be the selected method, however it should not be a required maintenance activity as shown in Tables 1a and 1b.
Response: The SDT thanks you for your comments and has modified the standard in consideration of your comments. All references to specific gravity and temperature testing have been removed from the revised standard.		
Ohio Valley Electric Corp.	No	1. In general, all maintenance activities that are verifications of proper function imply that problems found must be resolved within the maximum interval. For some activities, that is an unreasonable expectation. A temporary resolution may reliably correct an adverse situation but may not address the original verification requirement within the maximum interval. 2. Routine substation inspections should not fall under NERC standards. The documentation for quarterly inspections would be oppressive. It is unreasonable to require there to be no DC grounds. All DC grounds do not rise to the level of a reliability concern. In some cases, attempting to resolve a relatively minor DC problem may rise to the level of negatively affecting reliability. 3. The value of capacity testing battery banks and chargers in the context of a protection system reliability

Organization	Yes or No	Question 2 Comment
		standard is questionable.
Response: The SDT thanks you for your comments. **1. The SDT has modified the standard to clarify that corrective actions must be initiated, but intentionally does not identify when they need to be completed, largely for the reasons you cite. See FAQ II-2-I (page 7) for a discussion on this.** **2. The SDT believes that certain verification activities must be performed on a periodic basis via visual inspection. The standard and Frequently Asked Questions document (See FAQ II-5-I, page 15) have been modified in consideration of your comment concerning locating and removal of a dc ground. References to dc grounds have been revised to "unintentional dc grounds."** **3. The SDT believes that the ability of the battery to provide required tripping current is CRITICAL to the reliability of the Protection System; else, the Protection System is unable to react properly when required. Similarly, the SDT believes that the ability of the charger to properly charge the battery is critical to sustain the battery capability.**		
AEP	No	In the process of performing maintenance, some protection systems may need to be taken out of service on in-service equipment (bus differential protection for example) where redundant protection systems do not exist. This action seems counter to NERC recommendations, presenting a scenario for expanding outages during a simultaneous fault. Would the implementation plan include time for the additions of redundant protection systems? Comments expanded in question 10 response.
Response: The SDT thanks you for your comments. To minimize system impact of maintenance, the maintenance necessarily should be scheduled at a time that minimizes the risks. The implementation plan addresses the development of acceptable PSMPs.		
RRI Energy	No	1. It is recommended to change the wording of the Maintenance Activities to the activity itself, not the resolved state of the maintenance correctable issue (i.e. "For microprocessor relay, check for proper operation of the A/D converters" instead of "For microprocessor relays, verify proper functioning of the A/D converters"). The wording of the standard effectively sets the end date for the correction of maintenance identified issues. In other words, maintenance has not taken place until all maintenance correctible issues have been completely resolved. The wording in the standard have set non-compliance "traps" for those performing the maintenance but have not completed correctable issues for legitimate reasons which may not be allowed by the no-exception approach of the standard. For example, rewording of the Battery Supply 3 month activities are recommended as follows: "Check for proper electrolyte level. Check for proper voltage. Check for dc supply grounds." As inspection activities, any issue not corrected during the interval should become a maintenance correctible issue. For generating stations, the judgments to locate and remove a ground are based upon criteria not accounted for in the requirements of this standard. An activity to locate and clear a ground requires the judgment of station maintenance and operational management depending upon the operating conditions of the unit and the level of the ground (solid or high-resistance).Inspections (3 month requirement

Organization	Yes or No	Question 2 Comment
		activities) although good practices, should not be standard requirements. 2. The practice of verifying the continuity of breaker trip circuits does not belong as an auditable NERC standard requirement; it becomes more of a documentation requirement rather than a reliability improvement. Otherwise, it will ultimately require the expending of resources in an unproductive manner primarily on the development, storage, and production of excessive records for compliance purposes. The elimination of this requirement is recommended. 3. For Table 1a Protection System Control Circuitry - rewording is suggested as follows: "Perform functional trip tests of Protection System trip circuits, including auxiliary relays essential to the proper functioning of the Protection System." The requirement, as presently worded "that includes all sections of the Protection System," is overly prescriptive and will create non-compliances for miniscule oversights, given the very large scope of components in protection systems that are spread out far and wide in a system. The requirement opens the door, allowing the compliance process itself to be punitive in nature. When pursued to the extreme under audit conditions, this requirement will be very difficult to demonstrate on a large scale. 4. For Table 1a Station dc supply: The ability of a battery charger to correctly supply equalize voltage to a battery has no direct correlation to reliability of the BES and does not belong in this standard. The objective is that the battery get an equalize charge when it needs it, not the maintenance of the equalize function of a battery charger. How the battery gets equalized is not important to this standard, especially since a battery and the equalize source are usually disconnected from the protection system during the process. 5. For Table 1a Station dc supply: The use of the term "in tolerance," for the measurement of specific gravity, is an inconsistency in stating the standard requirements. There are multiple activities that will necessitate the measurement of a quantity "in tolerance" whether it is battery charger output, individual cell voltages, connection resistances, or internal ohmic values. The suggested rewording is as follows: "Measure the specific gravity and temperature of each cell." 6. For Table 1a Station dc supply: Referring to the requirement to "verify that the station battery can perform as designed" very little of a generating station battery sizing is related to BES protection. Verification of a generating station to design conditions is outside the scope of BES protection and does not belong in this standard. Nearly all protection system operations operate without reliance upon the battery to do so, and the separation of the generating unit from the BES will take place within cycles, if called upon to do so. The remainder of the battery duty cycle is outside the scope of BES protection.

Response: The SDT thanks you for your comments.

The station dc supply 3 month activities section of table 1a has been reworded in consideration of your comment as shown below:

Check:

Organization	Yes or No	Question 2 Comment
		• Electrolyte level (excluding valve-regulated lead acid batteries) • Station dc supply voltage • For unintentional grounds **1. Also FAQ II-5-I (page 15) has been modified in consideration of your comment concerning location and removal of dc grounds on a generating station. The following was added to the FAQs:** In most cases, the first ground that appears on a battery pole is not a problem. It is the unintentional ground that appears on the opposite pole that becomes problematic. Even then many systems are designed to operate favorably under some unintentional DC ground situations. It is up to the owner of the Protection System to determine if corrective actions are needed on unintentional DC grounds. The standard merely requires that a check be made for the existence of Unintentional DC Grounds. Obviously a "check-off" of some sort will have to be devised to demonstrate that a check is routinely done for Unintentional DC Grounds. **Additionally, the Maintenance Activities in Table 1a, Table 1b, and Table 1c have been generally revised as you suggest, to present the activity rather that the resolved state.** **2. The SDT has modified the standard to clarify that this requirement is actually monitoring the trip coil. The SDT believes that verification of breaker trip coil continuity is a vital component of the Protection System performance, and that they must be maintained as specified in the Standard.** **3. The SDT believes that proper functioning of all trip circuit paths is a vital component of the Protection System performance, and that they must be maintained as specified in the Standard.** **4. The SDT has modified the standard in consideration of your comment and the requirement to equalize voltages has been removed from the revised standard** **5. The SDT has modified the standard in consideration of your comment and the comments from others, the reference to measuring specific gravity and temperature has been removed** **6. Thank you for your comments concerning verification that the station battery can perform as designed. Although the SDT agrees with you that very little of a generation station battery sizing is related to BES protection, the majority of a generation station battery duty cycle is for safely operating the station when the other elements of a station dc supply are unavailable and that some Protection System operations can operate using the other elements of the station dc supply besides the station battery. The SDT believes that the station dc supply is such an integral part of the Protection System of a generating station that, at a minimum, it must be maintained using the Maintenance Activities and Maximum Maintenance Intervals of Table 1. It is important to note that the station battery must still be able to perform its vital Protection System functions even if it is simultaneously supplying dc for its myriad of other applications. The required activities include "verify that the station battery can perform as designed."**
Indianapolis Power & Light Co.	No	1. Many preventive maintenance programs have testing tolerances which are tighter than the manufacturer's tolerances. This practice is used to force an action prior to falling outside of the manufacture's tolerances and

Organization	Yes or No	Question 2 Comment
		accounts for slight variations in test equipment and environment. Maintenance correctable issues should not be reportable unless the test failure falls outside of the manufacturer's published tolerances. 2. In tables 1a through 1c the "Type of Component" columns in each table do not have consistent listings from one 1a to 1b to 1c. The type of component should be identified consistently in each table. By doing so this would eliminate confusion in moving from one table to the other. 3. The maintenance activities for some types of components specifies how (i.e. Test and calibrate the relays. with simulated electrical inputs) while other maintenance activities do not specify how. The maintenance activities should either all be specific or all be generic. 4. For Station dc Supply (that has as a component any type of battery) the maintenance activity of "verify that no dc supply grounds are present" there is a problem of tolerance. It is impossible to have "no dc supply grounds present". There has to be some tolerance given here such as a voltage measurement from each battery terminal to ground +- 15 volts of nominal for example. 5. For the type of component of "Protection System Control Circuitry (trip circuits) (UFLS/UVLS Systems only), the maintenance activity requires a complete functional trip test" of the Protection System. This suggests that a breaker trip test is required at each maintenance interval. This requires tripping breakers that supply customers. It is impossible to trip each individual distribution feeder without forcing an outage on some customers as when there are no other usable circuits to tie the load off to. A failure to trip of a single distribution circuit in the overall scheme of a UVLS or UFLS scheme would have little effect on the BES. Trip testing BES breakers and verifying correct operation of breaker auxiliary contacts could become very difficult to accomplish since opening a breaker on a line might adversely affect the BES. ISOs may prohibit such an activity at any time. Allowances should be made for BES circuit breakers that can not be operated for such reasons if documented sufficiently.

Response: The SDT thanks you for your comments.

1. **The tolerances, per Note 1 to Table 1a, Table 1b, and Table 1c, are defined by the entity according to their application considerations as related to the component. The standard has been revised to exclude minor issues that can be corrected during the on-site maintenance activities from "maintenance correctible issues".**
2. **The variations in the "Type of Component" are a result of the varying maintenance activities that are necessary as there are higher levels of component monitoring. If the "Type of Component" was made consistent among all three tables, there would be additional confusion, because many of the "Types of Component" in Tables 1b and 1c would indicate that no maintenance activities are required.**
3. **Generic activity descriptions have been used except where specific activities are necessary.**
4. **The standard and Frequently Asked Questions document (See FAQ II-5-I, page 15) have been modified in consideration of your comment regarding**

Organization	Yes or No	Question 2 Comment
dc grounds. References to dc grounds have been revised to "unintentional dc grounds." **5. We agree. The minimum activities have been revised in the standard to not require tripping of the breakers for this table entry.**		
Platte River Power Authority Maintenance Group	No	Minimum maintenance activities should be based on categorization of relays and defined maintenance actions system by system using historical and definitively known data entity by entity. By establishing specific minimum maintenance activities you risk entities changing currently effective maintenance programs to programs that match minimum maintenance activities to meet requirements in the standard which could be less effective for their system.
Response: The SDT thanks you for your comments. As for including some activities and excluding others, the listed activities are contemplated as minimum activities and do not preclude an entity from performing additional activities. Your use of historical and definitively known data may be applicable to a Performance-Based maintenance program (R3) for some of your activities.		
PacifiCorp	No	No comment.
Duke Energy	No	Our comments are limited to activities in Table 1a. 1. " Protective Relays " okay 2. " Voltage and Current Sensing Devices Inputs to Protective Relays " Proper functioning should be verified at commissioning, and then anytime thereafter if changes are made in a PT or CT circuit. Additional periodic checks may be warranted as suggested in Table 1A; however no additional checking should be required where circuit configuration will inherently detect problems with a PT or CT. For example, PTs & CTs that are monitored through EMS or microprocessor relays will be alarmed when they are out of specification. 3. "Protection System Control Circuitry (Breaker Trip Coil Only) (except for UFLS or UVLS) "Need more clarity on exactly what this activity is expected to include. In some cases we have a red light on a control panel monitoring the circuit path to the trip coil. In locations where there is not a red light, verifying the continuity of the breaker trip circuit including the trip coil will be complicated. There is no straightforward way to do it without potentially impacting reliability, and we would have to consider modifying these installations to include a red light. 4." Protection System Control Circuitry (Trip Circuits) (except for UFLS or UVLS) "Need more clarity on exactly what the activity is. We believe testing one output all the way to the coil is sufficient to prove the trip path. The activity states that "all auxiliary contacts" must be tested. We propose that all protection control circuitry should be tested at initial commissioning, and then again if any changes are made. Ongoing routine testing is complicated and could pose reliability challenges to the BES. As stated on page 8 of the System Maintenance Supplementary Reference document: "Excessive maintenance can actually decrease the

Organization	Yes or No	Question 2 Comment
		reliability of the component or system. It is not unusual to cause failure of a component by removing it from service and restoring it. The improper application of test signals may cause failure of a component. For example, in electromechanical over current relays, test currents have been known to destroy convolution springs. In addition, maintenance usually takes the component out of service, during which time it is not able to perform its function. Cutout switch failures, or failure to restore switch position, commonly lead to protection failures. 5.” Protection System Control Circuitry (Trip Circuits) (UFLS/UVLS Systems Only) Need additional clarity on exactly what the test includes. “Complete functional trip test” should not include tripping the breaker. Proving the output of the relay should be sufficient. Systems that have all load shed on distribution circuits should require that trip output be confirmed but should not be required through to the trip coil due to constraints in tying distribution load. 6. Station dc supply (that has as a component any type of battery) Under the 3 month interval activities, we disagree with the wording of the activity Verify that no dc supply grounds are present. The activity should instead read “Check for dc supply grounds and if any are found, initiate action to repair. 7. Station dc supply (that has as a component any type of battery) Under the 18 month interval activities, what is meant by “Verify continuity and cell integrity of the entire battery”? Also what is required to “Inspect the structural integrity of the battery rack”? The “Supplementary Reference Document” and “Frequently asked Questions” document should be made part of the standard to provide clarity to the requirements. 8. Station dc supply (that has as a component Valve Regulated Lead-Acid batteries) Need more clarity on exactly what is required for a “performance or service capacity test of the entire battery bank”. The “Supplementary Reference Document” and “Frequently asked Questions” document should be made part of the standard to provide clarity to the requirement. 9. Station dc supply (that has as a component Vented Lead-Acid batteries) Need more clarity on exactly what is required for a “performance, service, or modified performance capacity test of the entire battery bank”. The “Supplementary Reference Document” and “Frequently asked Questions” document should be made part of the standard to provide clarity to the requirement. 10.” Protection system communication equipment and channels Need additional clarity on exactly what is required for the substation inspection. What is required for power-line carrier systems? 11. UVLS and UFLS relays that comprise a protection scheme distributed over the power system Need more clarity regarding the meaning of “distributed over the power system”.
Response: The SDT thanks you for your comments.		

Organization	Yes or No	Question 2 Comment
1. Thank you. **2. Your example describes attributes applicable to Table 1c, and which would not require periodic maintenance. If monitoring, as you've described, is not present, periodic verification is necessary as described in Table 1a.** **3. You are correct. This area of each of the Tables has been extensively revised in response to comments. FAQ II-4-C (page 10) explains that this "may be via targeted maintenance activities or by documented operation of these devices for other purposes such as fault clearing" and Section 15.3 of the Supplementary Reference (page 22) provides discussion on this.** **4. If only one path is tested, this provides no assurance that other paths will perform properly. The cited reference on Page 8 of the Supplementary Reference Document is focused on effective maintenance intervals, not on performing maintenances. There are methods of performing functional testing without injecting damaging test currents.** **5. The requirement has been modified to provide more clarity, and has been modified to remove the requirement to actually trip the breaker.** **6. The SDT has modified the standard in consideration of your comment – it now reads, "Check for unintentional grounds."** **7. The SDT has modified the standard in consideration of your comment on cell integrity of the entire battery. Also, the Protection System Maintenance Frequently Asked Questions document (FAQ II-5-H, page 15) that accompanied the standard for this comment period addresses your question about the battery rack in Station dc Supply section. According to the NERC Standard Development Procedure, a standard is to contain only the prescriptive requirements; supporting discussion is to be in a separate document.** **8. Methodologies regarding performance and service capacity tests for VLRA batteries are explained in detail in various available references. According to the NERC Standard Development Procedure, a standard is to contain only the prescriptive requirements; supporting discussion is to be in a separate document.** **9. Your comment is in the nature of a "how to", not a requirement, and therefore the SDT believes it belongs in the supporting discussion. According to the NERC Standard Development Procedure, a standard is to contain only the prescriptive requirements; supporting discussion is to be in a separate document.** **10. FAQ II-6-A (page 16) presents a variety of methods to maintain Protection System communication equipment.** **11. This refers to the common practice of applying UFLS on the distribution system, with each UFLS individually tripping a relatively low value of load. Therefore, the program is implemented via a large number of relays, and the failure of any individual relay to perform properly will have a minimal effect on the effectiveness of the UFLS program. There are some UVLS systems that are applied similarly.**		
Progress Energy	No	Progress Energy does not agree with the activity "Verify that the battery charger can perform as designed by testing that the charger will provide full rated current and will properly current-limit." We are unclear how this test should be performed.
Response: The SDT thanks you for your comments. The SDT has modified the standard in consideration of your comment. The component description was changed to: Station dc supply (which do not use a station battery) And the maintenance activity was changed to: Verify that the dc		

Organization	Yes or No	Question 2 Comment
supply can perform as designed when the ac power from the grid is not present.		
Xcel Energy	No	Regarding battery chargers, does the SDT propose that OEM-type tests be performed to validate the rated full current output and current limiting capabilities? It has been proposed that simply turning off the charger and allowing the batteries to drain for a period of several hours, then returning the charger to service will validate these items. It is not clear that an auditor would come to the same conclusion, since it appears open to interpretation. Please modify to make this clear. If an entity has an over-sized battery charger, they can (and should) only test to the max capacity of the battery bank. Suggest changing "full rated current" to "designed charging rate".
Response: The SDT thanks you for your comments. The SDT has modified the standard in consideration of your comment. The component description was changed to: Station dc supply (which do not use a station battery) **And the maintenance activity was changed to:** Verify that the dc supply can perform as designed when the ac power from the grid is not present.		
Austin Energy	No	See item # 10 Comments
Response: See #10 Response		
Otter Tail Power	No	Station DC supply - (Maintenance Activity) As a company we do not think that measuring specific gravity and temperature of each cell is necessary. There is a better test that we use with the Bite Impedance Test. We have had good success with the impedance test for determining the batteries condition. See article (Impedance Testing Is The Coming Thing For Substation Battery Maintenance)written in Transmission & Distribution 11/1991 by Richard Kelleher, Test & Maintenance Specialist, Northeast Utilities.
Response: The SDT thanks you for your comments regarding DC supply. Changes have been made to the standard in consideration of your comments. The requirement to measure specific gravity and temperature of each cell has been deleted.		
Detroit Edison	No	1. Suggest that under "Maintenance Activities" for "Protective Relays" add the following: Verify proper functioning of the microprocessor relay external logic inputs (carrier block, etc.) 2. We recommend not requiring specific gravity and temperature readings for batteries. We have found from experience that the time and difficulty to obtain specific gravity readings are not justified. We have found that utilizing visual inspections, voltage and internal/intercell resistance readings gives a good picture of the health of the battery. We use specific gravity readings on occasion for troubleshooting purposes. 3. It is recommended that the sections about verifying battery charger performance be eliminated if there are low voltage alarms that go to a monitored location.

Organization	Yes or No	Question 2 Comment
		4. We recommend changing the maximum maintenance interval for DC supplies with no battery from 18 months to 3 years. If there is no battery, you do not have the risk of failure of chemical processes and such that would require an interval as short as 18 months.
Response: Thank you for your comments 1. **The SDT has modified the standard in consideration of your comment. The revised activity reads as follows:** For microprocessor relays, check the relay inputs and outputs that are essential to proper functioning of the Protection System 2. **Thank you for your comments regarding DC supply. The SDT has modified the standard in consideration of your comment. The requirement to measure specific gravity and temperature of each cell has been deleted.** 3. **Changes have been made to the standard in consideration of your comments regarding verifying battery charger performance. The only requirement relative to battery chargers in the latest draft of the standard (see Table 1a, pg 14) is to verify the float voltage.** 4. **The SDT disagrees; the 18-month interval includes several items that can be verified only by physical inspection; that are independent of chemical processes, and that affect the ability of the dc supply to perform properly.**		
SCE&G	No	1. Table 1a Level 1 Monitoring has a requirement to "Verify the continuity of the breaker trip circuit including trip coil" at least every 3 months. This is interpreted to be applicable to both the low-side generator output breaker and the high-side breaker for the GSU. The generator output breaker has 3 separate trip coils (one for each pole) that are connected in a parallel configuration and there is no means available to verify continuity of each of these coils INDIVIDUALLY in this arrangement. Is the intent of this requirement to have each trip signal parallel leg verified every three months even though the trip contacts are normally open (these circuits are functionally checked during LOR Functional Verification)? 2. Also, is the Red Indication Light (RIL), which includes the trip coil in the power circuit, adequate for verification (note that the breaker does not include the parallel legs that contain the tripping sensor contacts)? 3. Also, more clarification is needed on the section "Verify proper functioning of the current and voltage circuit inputs from the voltage and current sensing devices to the protective relays" under "Voltage and Current Sensing Devices Inputs to Protective Relays." How would this be done if no redundancy is available for cross-checking voltage and current sources? 4. In certain situations, "verify proper functioning" is not clear enough. Documentation of verification consistent with the entities procedures should be adequate to indicate compliance.
Response: The SDT thanks you for your comments. **1. The SDT has modified the standard to remove the requirement cited in your comment.**		

Organization	Yes or No	Question 2 Comment
2. The SDT has modified the standard to remove the requirement cited in your comment. **3. The Supplementary Reference Document, Section 15.2 (page 21) and FAQ II-3 (page 8) provides several discussions on this item.** **4. Documentation of verification consistent with your procedures is sufficient to "verify proper functioning"**		
Dynegy	No	Table 1a requires entities to "verify the continuity of the breaker trip circuit including trip coil..." The term "verify" needs clarification. For example, we believe verifying red and green" lights during routine inspection should be sufficient. On the other hand, actual testing is not feasible and is risky to reliability.
Response: The SDT thanks you for your comment, and has modified the standard to remove the requirement cited in your comment.		
Nebraska Public Power District	No	1. Table 1a, for Protective Relays identifies the following Maintenance Activities: Test and calibrate the relays (other than microprocessor relays) with simulated electrical inputs. Verify proper functioning of the relay trip outputs. What is the difference between these two requirements? They appear to be practically equivalent. 2. Tables 1a & 1b, for Station DC supply identify the following Maintenance Activity: Measure that specific gravity and temperature of each cell is within tolerance (where applicable). What is the advantage of testing the SG in every cell compared to using a pilot cell as representative sample of the entire bank? NPPD has not experienced any problems using a pilot cell compared to testing every individual cell. Typically, if the SG is low the cell voltage will be low, which is detected by the voltage test. This seems to be an excessive requirement and does increase personnel exposure to hazardous fluid. What unique information is provided by this test that other tests do not provide?
Response: The SDT thanks you for your comments. **1. The SDT has modified the standard in consideration of your comment. The activity to "verify proper functioning of the relay trip outputs was changed to:** Verify that settings are as specified. **2. The SDT thanks you for your comments regarding DC supply and has made changes to the standard in consideration of your comments. The requirement to measure specific gravity and temperature of each cell has been deleted.**		
ENOSERV	No	1. Table 1A, protective relays for 6 calendar years, Testing and calibrating the relays other than microprocessors relays with simulated electrical inputs... does that mean that micro processor relays do not need to be checked? 2. Verify proper function of the relay trip outputs... Does this involve both electro AND micro processors? Then when mentioning the verifying microprocessor relays, does that include the trip output.

Organization	Yes or No	Question 2 Comment
Response: The SDT thanks you for your comments. **1. Yes. The SDT has modified the standard for clarity. The maintenance activities for microprocessor relays were changed to read as follows:** For microprocessor relays, check the relay inputs and outputs that are essential to proper functioning of the Protection System. For microprocessor relays, verify acceptable measurement of power system input values. **2. Yes. The SDT has modified the standard for clarity. The language for microprocessor relays was changed as noted in response to your first comment; the following modification addresses all protective relays:** Verify that settings are as specified.		
Southern Company	No	1. Tables 1a and 1b require entities to verify the proper operation of voltage and current inputs to sensing devices on a 12 year interval. The Protection System Supplementary Reference (Draft 1), in section 15.2, describes several methods that may be used for such verification efforts. In order to perform this type of verification the circuit in question would need to be in operation. This verification introduces a possible unit trip due to the need to connect test equipment to live potential and current circuits at each relay, which has the potential to trip the circuit under test. This could result in the loss of critical transmission lines or generating units. The System Maintenance Supplementary Reference also allows saturation tests or circuit commissioning tests to satisfy this requirement; however, these types of tests require the circuit in question to be removed from service. For generating plants, removing the circuit from service requires that the station be shut down. We do not feel that the value obtained from this requirement is equal to the risk or maintenance burden associated with it. Such testing and verification should not be required periodically, but only if new instrument transformers, cabling or protective devices are installed or if the instrument transformers are replaced. 2. Table 1b: Protection System Control Circuitry (Trip Coils and Auxiliary Relays) " Experience has shown that electrically operating partially monitored breaker trip coils, auxiliary relays, and lockout relays every 6 years is not warranted. This testing introduces risk from a human error perspective as well as from additional switching and clearances required. We recommend eliminating this maintenance requirement. 3. Protection System Control Circuitry (Trip Circuits) (UFLS or UVLS Systems Only) - Table 1b includes the statement "Verification does not require actual tripping of circuit breakers or interrupting devices." This statement should be included in Table 1a. 4. In Table 1a "Station DC Supply (that has as a component any type of battery), we recommend changing the maximum maintenance interval from 3 months to 6 months as described below. 5. "Verify Proper Electrolyte Level "3 Months - The 3 months interval for verifying proper electrolyte level is excessive for current battery designs that are properly maintained. The interval in which the electrolyte must be replenished is affected by many factors. These include temperature, float voltage, grid material, age of the

Organization	Yes or No	Question 2 Comment
		battery, flame arrester design, frequency of equalization, and electrolyte volume in the battery jar. Manufacturers are aware that their customers want to extend the interval in which their batteries require water and this has lead to jar designs that have a wide min-max band with a high volume of electrolyte to allow for extended watering intervals. Understanding all the factors and proper maintenance will extend watering intervals. A battery should go a year or more between watering intervals and some as many as 3 years. Being conservative the Southern Company Substation Maintenance Standards require that we check the electrolyte level twice yearly. Experience has shown this has worked well. We propose that the "3 Months" interval be changed to "6 months". 6."Verify proper voltage of the station battery "3 Months - Being conservative, the Southern Company Substation Maintenance Standards require that we check the station battery voltage twice yearly. Experience has shown this has worked well. We propose that the "3 Months" interval be changed to "6 months". 7." Verify that no dc supply grounds are present "3 Months Being conservative, the Southern Company Substation Maintenance Standards require that we check for dc supply grounds twice yearly. Experience has shown this has worked well. We propose that the "3 Months" interval be changed to "6 months". 8. Measurement of Specific Gravity 18 Months- The measurement of specific gravity and temperature every 18 months is not necessary as a regular part of maintenance. Specific gravity can provide information as to the health of a cell; however, taking specific gravity readings is a messy process no matter how careful you are and will result in acid being dripped on top of the battery jars as the hydrometer is moved from cell to cell. Should a drop of acid end up on an external connection, it will result in corrosion and problems later. Voltage reading of cells can be substituted for specific gravity readings under normal conditions. Specific gravity is equal to the cell voltage minus 0.85. A cell with low voltage will have a low specific gravity. If cell voltage becomes a problem that cannot be addressed through equalization then specific gravity readings are justified as a follow-up test. Since measurement of specific gravity could lead to problems and reading cell voltage is a viable alternative, we propose that it be removed from the battery maintenance activities. 9. Verify Cell to Cell and Terminal Connection Resistance 18 Months - Clarification is needed on the expected method for verifying cell to cell and terminal connection resistance. This could easily be interpreted as requiring the use of an ohmic value (impedance/conductive/resistance) test device. If this is the case then basically it eliminates the need for the activity to "Verify that the substation battery can perform as designed by performing a capacity test every 6-Calendar Years or performing an ohmic value test every 18 Months", because the practical thing to do is go ahead and perform the ohmic value test while you have your device connected to the battery. 10. In table 1a and 1 b - Station dc supply (that has as a component -Vented Lead-Acid batteries). Verify that the Substation Battery can Perform as Designed 6 Calendar Years/18 Months - Southern Company Transmission has approximately 570 batteries that are covered by this proposed standard. These batteries currently have ohmic value testing performed every "4 Years" as required by the Southern Company

Organization	Yes or No	Question 2 Comment
		Substation Maintenance Standards. The “4 Years” interval has been utilized for over 10 years and has not experienced a failure of any of the 570 batteries to perform as designed Having to perform ohmic value testing on an “18 Months” interval will significantly increase our costs and manpower requirements with no anticipated improvement in reliability. We propose that the “18 Months” interval for ohmic value testing be changed to “4 Calendar Years”. This proposal also applies to verifying cell to cell and terminal connection resistance if an ohmic value test device is required as discussed above. 11. In table 1a and 1b Station dc supply (that uses a battery and charger). Verify that the Battery Charger can Perform as Designed 6 Calendar Years - Clarification is needed on an acceptable method for verifying that the battery charger can perform as designed by testing that the charger will provide full rated current and will properly current limit, especially the part about “will properly current limit”. 12. On Table 1b Station DC Supply (that has a component any type of battery) we recommend changing the maximum maintenance interval from 3 months to 6 months as described below “ Verify Proper Electrolyte Level “ 3 Months - The 3 months interval for verifying proper electrolyte level is excessive for current battery designs that are properly maintained. The interval in which the electrolyte must be replenished is affected by many factors. These include temperature, float voltage, grid material, age of the battery, flame arrester design, frequency of equalization, and electrolyte volume in the battery jar. Manufacturers are aware that their customers want to extend the interval in which their batteries require water and this has lead to jar designs that have a wide min-max band with a high volume of electrolyte to allow for extended watering intervals. Understanding all the factors and proper maintenance will extend watering intervals. A battery should go a year or more between watering intervals and some as many as 3 years. Being conservative the Southern Company Substation Maintenance Standards require that we check the electrolyte level twice yearly. Experience has shown this has worked well. We propose that the “3 Months” interval be changed to “6 months”. 13. We recommend removing the “Detection and alarming of dc grounds” monitoring attribute. Note that this applies to every “Station dc supply” section where it is listed. .Experience has shown that there have been no significant problems discovered via alarms that would not have been discovered by 6 month inspection cycles. We propose to add “verify no dc grounds are present” as a maintenance activity on a 6 months inspection cycle. Experience has shown that there have been no significant problems discovered via alarms that would not have been discovered by 6 month inspection cycles. 14. Table 1a, p. 7, Station dc supply, 3 month interval: need to add “unintentional” to the sentence “Verify that no dc supply grounds are present.” Because most dc systems have ground detection systems which place an intentional ground on the battery. “No grounds” is not practical and is unacceptable since most dc systems have some high resistance ground paths. Some criteria should be established to determine the acceptable ground resistance on a dc system. 15. Table 1a, p. 8: For the vented, lead-acid battery, there is no basis for the 18 month activity option

Organization	Yes or No	Question 2 Comment
		(internal ohmic value measurement) in place of the 6 year performance test. 16. The activities for trip checks for Level 1A and Level 1B should be the same. Currently, they read: Level 1a: Perform a complete functional trip test that includes all sections of the Protection System trip circuit, including all auxiliary contacts essential to proper functioning of the Protection System. Level 1b: Verify that each breaker trip coil, each auxiliary relay, and each lockout relay is electrically operated within this time interval. The Level 1a text is adequate for 1b also. 17. Table 1c, p 16: Monitoring of single or parallel trip circuits is not practical where multiple normally open contacts are in series to trip. Monitoring of the trip coils is practical and useful. How would one monitor several normally open contacts which are in series to trip a breaker? 18. Table 1c, p. 15, 16, 19: The use of "continuous" under "Maximum Maintenance Interval" in Table 1c should be changed to "N/A" and the Maintenance Activity should be "NONE". 19. Verification of the various monitoring (automated notification) systems is not specified anywhere in the requirements. This, too, should be required.

Response: The SDT thanks you for your comments.

1. The SDT believes that proper functioning of the sensing devices is a vital component of the Protection System performance, and that they must be maintained as specified in the Standard. To minimize system impact of such maintenance and possible errors, the maintenance necessarily should be scheduled at a time that minimizes the risks.

2. The SDT believes that proper functioning of the Protection System Control Circuitry is a vital component of the Protection System performance and those must be maintained as specified in the standard. To minimize system impact of such maintenance and possible errors, the maintenance necessarily should be scheduled at a time that minimizes the risks

3. The SDT has modified the standard in consideration of your comment. The following was added to Table 1a:

> **Type of Component -** Control and trip circuits with electromechanical trip or auxiliary (UFLS/UVLS Systems Only)
>
> **Maximum Maintenance Interval -** 6 Calendar Years
>
> **Maintenance Activity -** Perform a complete functional trip test that includes all sections of the Protection System control and trip circuits, including all electromechanical trip and auxiliary contacts essential to proper functioning of the Protection System, except .that verification does not require actual tripping of circuit breakers or interrupting devices.

4. Please see responses 5, 6 and 7 (below) for discussion regarding your concern about extending the Maximum Maintenance Intervals for an extra 3 months on activities related the station dc supply.

5. The SDT agrees that a healthy modern lead acid battery can go for extended periods of time beyond 3 months without requiring watering. However, checking cell electrolyte level not only indicates the need for battery watering, it is an indication of an individual cell's health and needs to remain at

Organization	Yes or No	Question 2 Comment
		the Maximum Maintenance Interval of 3 months. To avoid the confusion that the Maintenance Activity listed in Table 1 was to water the battery at the specified 3 month interval, the Drafting Team has changed the wording of the Maintenance Activity from "verify proper" to "check" electrolyte level. 6. Thank you for your comment to extend the Maximum Maintenance Interval for checking the station dc supply voltage. The SDT believes that extending the Maximum Maintenance Interval beyond that listed in Table 1 would compromise the performance of the station dc supply. 7. Due to the consequences of unintentional grounds to the station dc control system, the SDT feels that extension of the Maintenance Intervals beyond the 3 month interval is not prudent. See FAQ IV-2-F (Page 23). 8. Changes have been made to the standard in consideration of your comments regarding specific gravity testing, and the revised standard does not include a requirement to perform this maintenance activity. 9. Thank you for your comments concerning performance of ohmic measurement at the same time that connection resistance is measured. As you suggested, these two measurements could be taken at the same time to meet the requirements of their respective Maintenance Activities. 10. Thank you for your comments concerning evaluating internal ohmic values and measurement of battery connection resistance for Vented Lead-Acid (VLA) batteries. As noted in your comment an owner has two different Maintenance Activities with associated different Maximum Maintenance Intervals to choose from in verifying that the VLA station battery can perform as designed. FAQ II-5-F (page 14) and II-5-G (page 14) provides an explanation of why there are two different intervals for these Maintenance Activities is given. Because trending is an important element of ohmic measurement evaluation, the SDT believes that extending the Maximum Maintenance Interval listed in Table 1 for evaluating internal ohmic values to four years as suggested would not provide the necessary information for proper evaluation of the ability of the station battery to perform as designed. Concerning verifying cell to cell and terminal connection resistance as part of inspecting the battery, various technical references on Lead-Acid battery maintenance talk about how and why this Maintenance Activity should be performed at the Maximum Maintenance Interval listed in Table 1. The SDT believes that to extend this inspection activity for the connections of a Lead-Acid battery beyond the Maximum Maintenance Interval would compromise the performance of the station dc supply. 11. The SDT has modified the standard in consideration of your comment regarding battery charger performance. The only remaining maintenance activity relevant to the battery charger is to verify the float voltage. 12. The SDT agrees that a healthy modern lead acid battery can go for extended periods of time beyond 3 months without requiring watering. However, checking cell electrolyte level not only indicates the need for battery watering, it is an indication of an individual cell's health and needs to remain at the Maximum Maintenance Interval of 3 months. To avoid the confusion that the Maintenance Activity listed in table 1 was to water the battery at the specified 3 month interval, the Drafting Team has changed the wording of the Maintenance Activity from "verify proper" to "check" electrolyte level. 13. Thank you for your comments concerning the monitoring attribute for unintentional dc grounds on the station dc supply. Due to the consequences of unintentional grounds to the station dc control system (see FAQ II-5-I, page 15), the SDT feels that monitoring for them is an important part of an effective condition based maintenance program and should be an option available for those who want to perform condition based maintenance. Also because the threat to the dc system and the BES that unintentional dc grounds create, the SDT feels that extension of the Maintenance Intervals for

Organization	Yes or No	Question 2 Comment
checking for unintentional dc grounds beyond the 3 month interval is not prudent. See FAQ IV-2-F (page 23). **14. The SDT has modified the standard in consideration of your comment regarding dc grounds – the word, "unintentional" was added as proposed.** **15. The SDT thanks you for your comment concerning ohmic value measurements. The FAQ II-5-F (page14) includes an explanation for the basis of this activity. The SDT believes that this Maintenance Activity is a viable alternative that a Vented Lead-Acid battery owner can perform at the Maximum Maintenance Interval of Table 1 in place of conducting a performance, modified performance or service capacity test.** **16. For Table 1b, much of the DC control circuit is, by definition, being monitored; therefore, the only requirement is that the electromechanical devices be exercised.** **17. With the detail provided in your comment, it appears to the SDT that you would not be able to use Table 1c in this example.** **18. "Continuous" is intended to clarify that the maintenance is being performed continuously via the monitoring system and the Activities portion of the table is intended to state those activities that are being performed by the monitoring system.** **19. This verification is established within the "General Description" at the top of Table 1c as generic criteria to use this table.**		
Transmission Owner	No	a. Tables 1a, 1b & 1c should offer as an alternative, measuring battery float voltages and float currents in lieu of measuring specific gravities as described in Annex A4 of IEEE Std 450-2002. b. Inspection of CVT gaps, MOVs and gas tubes should be added to the communications equipment time based maintenance tables. Failure of the CVT protective devices may cause failure of the Protection System. c. Maintenance Activities for UVLS or UFLS station dc supplies shows "Verify proper voltage of dc supply". Does this imply that, except for voltage readings of the dc supply, distribution battery banks are not maintained? d. Why does the Maintenance Activities for UVLS or UFLS relays state that verification does not require actual tripping of circuit breakers? e. Please clarify the Maintenance Activities for Voltage and Current Sensing Devices. Must voltage, current and their respective phase angles be measured at each discrete electromechanical relay?
Response: The SDT thanks you for your comments. **a. The SDT has modified the standard in consideration of your comment regarding dc supply. All references to measuring specific gravities have been removed from the revised standard – and for Table 1a for station dc supply, the language was revised to require, "Verify float voltage of battery charger."** **b. Power line carrier channels are made up of many components that must be maintained on a periodic basis. This standard indicates that adequate maintenance and testing must be done to keep the performance of the channel at a level that meets the requirements of the relay system. The**		

Organization	Yes or No	Question 2 Comment
determination of specific maintenance activities is the responsibility of the Entity. **c. This standard limits the maintenance requirements of distribution system batteries to those used for UVLS and UFLS and constrains those requirements to verification of proper voltage. If "distribution system" batteries are used for any other BES Protection System applications, they must be maintained according to the other requirements of this standard.** **d. The SDT believes that the UFLS scheme is predominantly based within the distribution sector. As such, there are many circuit interrupting devices that will be operating for any given under-frequency event that requires tripping for that event. A failure in the tripping-action of a single distribution breaker will be far less significant than, for example, any single Transmission Protection System failure such as a failure of a Bus Differential Lock-Out Relay. While many failures of these distribution breakers could add up to be significant, it is also believed that distribution breakers are operated often on just fault clearing duty and therefore the distribution circuit breakers are operated at least as frequently as any requirements that might have appeared in the standard.** **e. Not exactly. The requirement is that the entity must verify that proper voltage, current, and phase angle is delivered to the relays. The standard does not prescribe methodology. See FAQ II-3-A (page 8) and the Supplementary Reference Document, Section 15.2 (page 21) for a discussion on this topic.**		
Pepco Holdings Inc.	No	1. Tables 1a, 1b and 1c all require measuring specific gravity and temperature of battery cells. This invasive test provides no information regarding battery health that cannot be obtained from cell impedance testing. Recommend requiring cell impedance OR specific gravity & cell temperature testing. 2. Tables 1a, 1b and 1c all require testing the battery charger every 6 years to verify that it can provide full rated current and will properly current limit. In order to perform this (unnecessary) test the battery would be subjected to a deep discharge. Whatever benefits may be derived from this test are dwarfed by the negative effect on the battery. Recommend removing this requirement.
Response: The SDT thanks you for your comments. **1. The SDT has made changes in consideration of your comments regarding measuring of specific gravity and temperature of battery cells and removed this maintenance activity from the revised standard.** **2. The SDT has modified the standard in consideration of your comments regarding battery charger performance. All maintenance activities relating to the battery charger were removed except for verification of the float voltage.**		
Illinois Municipal Electric Agency	No	1. The Illinois Municipal Electric Agency (IMEA) is concerned the minimum maintenance activities may be too prescriptive for transmission subsystems that essentially operate radially. 2. Please see comment under Question 7. 3. Also, IMEA supports comments submitted by Florida Municipal Power Agency regarding applicability to

Organization	Yes or No	Question 2 Comment
		UFLS systems.
Response: The SDT thanks you for your comments. **1. This standard applies Protection Systems that that are applied on, or are designed to provide protection for the BES. The SDT believes that the level of prescription within the standard is necessary to satisfy the guidance in FERC Order 693, and also to address observations from the Compliance Monitoring entities (the Regional Entities and NERC) that PRC-005-1 is excessively general. FERC Order 672 also specifies that NERC Standards should be clear and unambiguous. The SDT has therefore defined the minimum activities necessary to implement an effective PSMP.** **2. Please see our response to your comments under Question 7.** **3. The SDT has responded to the FMPA comments regarding UFLS systems.**		
Consumers Energy Company	No	1. The second sentence in Note 1 on page 20 should be changed to "A calibration failure is when the relay is inoperable and cannot be brought within acceptable parameters." 2. Note 2 should be changed to "Microprocessor relays typically are specified by manufacturers as not requiring calibration. The integrity of the digital inputs and outputs will be verified by applying the inputs and verifying proper response of the relay. The A/D converter must be verified by inputting test values and determining if the relay measurements are correct."
Response: The SDT thanks you for your comments. **1. The standard establishes a calibration failure to be any condition where the relay is found to be out of tolerance, whether or not it can be restored to acceptable parameters. The condition described is a calibration failure that is also a "maintenance correctable issue" as established in revisions to R4 and the resulting footnote, and requires more extensive action to resolve.** **2. Note 2 has been removed and the relevant requirements added to the Tables themselves. There are methods, other than inputting test values, to verify the A/D converter.**		
American Transmission Company	No	1. The Standard should focus on identifying the types of components to be tested but should not identify the specific maintenance activities that must be performed. Entities should be allowed the flexibility to develop and implement the appropriate maintenance activities necessary for each identified component. 2. ATC is also concerned with the expressed identification of maintenance intervals. We do not believe that the standard should identify specific maintenance intervals but that it should require entities to identify their maintenance intervals appropriate for their system. If the team continues to pursue specific maintenance intervals it will be establishing the industries practices. 3. Specific Concern: The standard identifies that entities should perform complete functional testing as part of its maintenance activities, but we are concerned that this could lead to reduced levels of reliability, because it

Organization	Yes or No	Question 2 Comment
		requires entities to remove elements from service and then requires entities to perform tests that are inherently prone to human errors. We believe that the perceived benefits do not match the anticipated costs or improve system reliability.
Response: The SDT thanks you for your comments. As you are probably aware, protection systems have contributed to most major events, indicating a need to provide greater "defense in depth" to the body of standards. While many facility owners do have effective protective system maintenance programs, some do not – which puts the grid at risk. **1. Specific activities are defined where necessary to implement an effective PSMP, and has provided for flexibility where there are multiple methods that will be effective.** **2. FERC Order 693 expressly directs NERC to develop maximum maintenance intervals.** **3. The SDT believes that complete functional testing is a vital component of the Protection System performance, and must be performed as specified in the standard. To minimize system impact of such maintenance and possible errors, the maintenance necessarily should be scheduled at a time that minimizes the risks.**		
Wolverine Power Supply Cooperative, Inc.	No	The tables are too prescriptive - The standards should state what, not how.
Response: The SDT thanks you for your comments. The SDT believes that the level of prescription within the standard is necessary to satisfy the guidance in FERC Order 693, and also to address observations from the Compliance Monitoring entities (the Regional Entities and NERC) that PRC-005-1 is excessively general. FERC Order 672 also specifies that NERC Standards should be clear and unambiguous. The SDT has therefore defined the minimum activities necessary to implement an effective PSMP.		
Northeast Power Coordinating Council	No	1. We agree there is a need for minimum maintenance activities; however, the standard does not clearly define the differences between Table 1a, 1b, and 1c. It is recommended that the drafting team develop definitions for the equipment listed in these tables. For example, Table 1a equipment consists of mechanical and solid state equipment without monitoring capability, Table 1b consists of mechanical and solid state equipment with monitoring capability, and Table 1c consists of equipment capable of self monitoring. 2. In addition, all battery, charger and power supply maintenance activities should be removed from Table 1a, 1b, and 1c, and summarized in a separate Table (i.e. Table 2). Tables 1a and 1b for 'Station dc supply (that has as a component any type of battery) and Table 1c for 'Station dc Supply (any battery technology) for an 18 Month 'Maximum Maintenance Interval' identifies the need to 'Measure that the specific gravity and temperature of each cell is within tolerance (where applicable).' 3. Following industry best practices, we would recommend using the MBRITE diagnostic test. MBRITE testing provides more information than a specific gravity test while reducing the risk of injury to testing

Organization	Yes or No	Question 2 Comment
		personnel. 4. In Table 1a, the Type of Component "Protection system communications equipment and channels." has a 3 month "Maximum Maintenance Interval". Clarification needs to be provided as to how an unmonitored (do not have self-monitoring alarms) will be tested. 5. Table 1a refers to "Unmonitored Protection Systems". The "6 Calendar Years" "Maximum Maintenance Interval" "Maintenance Activities" is excessive.
Response: The SDT thanks you for your comments. **1. The component differences between Table 1a, Table 1b, and Table 1c are described in the header to the Tables and in the specific monitoring attributes for the specific component types. Please see the decision trees near the end of the FAQ document (pages 33-37).** **2. The SDT believes that the Station DC Supply component should be addressed with the other components, and has simplified the Tables in consideration of your comments.** **3. The DC Supply component has been modified, and no longer specifically requires specific gravity testing.** **4. See FAQ II-6-B (page 16) for a discussion of a number of methods to test the communications systems.** **5. Your comment is unclear, and the SDT is unsure how to respond. The SDT believes that the level of prescription within the standard is necessary to satisfy the guidance in FERC Order 693, and also to address observations from the Compliance Monitoring entities (the Regional Entities and NERC) that PRC-005-1 is excessively general. FERC Order 672 also specifies that NERC Standards should be clear and unambiguous. The SDT has therefore defined the minimum activities and maximum intervals necessary to implement an effective PSMP. Some entities may feel that they need to maintain Protection System components more frequently.**		
Lower Colorado River Authority	No	We agree with all stated intervals except for the maximum stated interval of 6 years for Protection System Control Circuitry (Trip Coils and Auxiliary Relays) in tables 1b and 1c. What was the intent of separating this interval out from the Protection System Control Circuitry (Trip Circuits), which is 12 years for monitored components? Monitoring of the trip coils should be enough to justify a maximum interval of 12 years. As stated these requirements will put an undue financial and resource burden on utilities that have updated their protective relay systems with state-of "the art components and monitoring. In addition to the expense and effort of scheduling the additional maintenance, the additional validation of lockouts and auxiliary relays, separate from the full function testing could lead to additional human errors and accidental tripping of circuits while testing. We believe there should be one stated activity "Protection System Control Circuitry and have a maximum interval of 12 years for monitored systems.
Response: The SDT thanks you for your comments. **Monitoring of the coil of these devices does not assure that the device will mechanically operate properly. Electromechanical devices such as lockout**		

Organization	Yes or No	Question 2 Comment
relays and auxiliary relays must be exercised periodically to assure proper operation. The monitoring systems cannot perform this. See Supplementary Reference Document Section 15.3 (page 22).		
Ameren	No	We agree with the vast majority of them, listed below are our few concerns, questions, and pleas for clarification. 1) We disagree with doing specific gravity and temperature of every cell in the 18 month test because the other tests being done are already comprehensive. 2) FAQ 3B p 29 digital relay A/D verification should include simply comparing digital relay displayed metered values to another metered source. 3) FAQ 3A p6 Change “prove that” to “verify”. For single CT or VT, this can be challenging and some measure of reasonableness in determining an expected value comparable to the measured value must be acceptable. 4) FAQ 1B p17 Combining evidence forms of “Process documentation or plans” and “Data” or “screen shots” shows compliance. Please add an example or verbiage to clarify that a field technician’s (or operator) recorded check-off combined with a company’s process is sufficient evidence. Otherwise documentation alone could consume considerable field personnel time. 5) FAQ p2 Add FAQ to clarify “verify settings”. If EM relays are included, explain that minor tap or time dial differences of the order of relay tolerances are acceptable. For digital relays state that software compare functions are a sufficient means to “verify settings.” 6) Omit Table 1b row 3 because row 4 actually applies to Monitoring Level 2 Trip Circuits. Row 3 already appears in Table 1a, and repeating it in Table 1b is confusing. 7) FAQ 4D p 7 then defines auxiliary relays as device 86 and 94. Does device number nomenclature or function determine and restrict inclusion? 8) Please state that “a location where action can be taken for alarmed failures” would include a dispatch center or control room. From there the custodial authority would be called out to take action. 9) Please explain the expansion from station battery to station DC supply, specifically the addition of the charger, an AC to DC device. 10. The charger load test up to its current limiter would add a significant amount of work with little known benefit. 11. Have charger problems been a significant cause of cascading outages? 12) We oppose your expansion of Station DC Supply to UFLS (the last row on page 8.) PRC-008-0 is

Organization	Yes or No	Question 2 Comment
		restricted to UFLS equipment. UFLS is often applied in distribution substations to trip feeders directly serving load. Your scope expansion has the potential to greatly increase the number of substation DC Supplies covered by NERC standards. ,. While we agree that UFLS is BES applicable, and those substations are included in our overall maintenance program, this expansion to NERC scrutiny is not warranted. Have there been UF events in which a material amount of load was not shed because of DC problems? UFLS is spread out amongst many distribution stations, and even if a couple did fail to trip in an underfrequency event, it would have little effect. 13) FAQ 2 p 17 expands the scope at Generating Facilities so that system connected station auxiliary transformers would be included. We oppose this expansion as these are radially served loads, and they often do not result in generation loss. Even if they did, the BES can readily tolerate the loss of a single generator.

Response: The SDT thanks you for your comments.

1. **All references to specific gravity and temperature testing have been removed from the revised standard.**
2. **The FAQ has been revised and reorganized in response to many industry comments; see FAQ II-3 (all subsections – pages 8-10) for a discussion of this topic.**
3. **The FAQ has been revised and reorganized in response to many industry comments; see FAQ II-3 (all subsections – pages 8-10) for a discussion of this topic.**
4. **The FAQ has been revised and reorganized in response to many industry comments; see FAQ IV-1-B (page 21)**
5. **See FAQ II-2-D & II-2-E(pages 6-7).**
6. **Table 1a and Table 1b each stand alone; use the table that is relevant to the level of monitoring that is implemented.**
7. **The SDT modified the FAQ to remove references to the IEEE device numbers (page 11) except when essential to respond to the question. Regardless of how the device is described by internal entity nomenclature, the function of the device determines whether it is included within the standard.**
8. **Your suggestion is properly considered as an example. See FAQ V-1-A (page 28).**
9. **The SDT believes that the charger is an integral portion of the Station DC supply; thus it has been added. The SDT has modified the standard to simplify the requirements related to maintenance of the battery charger.**
10. **The SDT modified the standard in consideration of your comment. All maintenance activities pertaining to battery chargers have been removed except verification of the float voltage.**
11. **The standard addresses overall Protection System reliability, not only those issues that may cause cascading outages.**
12. **The SDT believes that verification of the DC supply voltage to the UFLS is not burdensome. The SDT has modified the standard to clarify that the**

Organization	Yes or No	Question 2 Comment
only DC Supply requirement relevant to UFLS is to verify the DC supply voltage. **13. Station service transformers are essential to starting the plant during grid recovery. The FAQ clarifies why these elements are included. The standard addresses overall Protection System reliability, not only those issues that may cause extreme outages.**		
Manitoba Hydro	No	1. What documentation or evidence is required to prove that the Protection System Control Circuitry has been maintained every three months, if just a visual inspection of the breaker control trip circuit RED panel light has been completed, to verify continuity of breaker trip coil? 2. How do we handle breakers with dual trip coils and only one RED light for trip coil continuity? 3. What do the terms DISTRIBUTED and CENTRALIZED with respect to UFLS mean? 4. In Table 1C under the heading "Maximum Maintenance Interval" some of the entries are stated as being "Continuous". In the case of other maintenance activities the descriptor for Maintenance Interval indentifies the maximum period of time that may elapse before action must be taken. "Continuous" implies continuous action; however, in reality continuous monitoring enables no maintenance action to be taken until such time as trends indicate the need to do so. Therefore we recommend that where the maintenance interval is stated as "Continuous" it should be changed to read "Never" or "Not Applicable". 5. The Table 1A requirement of 3 months for Protection System Control Circuitry (Breaker Trip Coil Only) (except for UFLS or UVLS) should be omitted as it is not realistic. Recommend following the Table 1B requirement of 6 years (Trip testing) for this. Does 27 undervoltage monitoring of this circuit qualify as self monitoring?
Response: The SDT thanks you for your comments. **1. The requirement to which you refer has been removed. See FAQ IV-1-B (page 21) for a general discussion of documentation.** **2. The SDT has modified the standard to remove the requirement cited in your comment.** **3. See FAQ II-7-C (page 18) and FAQ II-8-E (page 19A).** **4. Continuous" is intended to clarify that the maintenance is being performed continuously via the monitoring system and the Activities portion of the table is intended to state those activities that are being performed by the monitoring system.** **5. The SDT has removed this requirement.**		
CPS Energy	No	While I agree for the most part, there are some activities that are unclear. 1. Specifically, the testing of voltage and current sensing devices, some of the trip coil testing, and some of the communications testing. If the trip coil is now going to be included in the definition of the protective

Organization	Yes or No	Question 2 Comment
		system, is the testing defined adequate? 2. The testing of the voltage and current sensing devices is not entirely clear.
Response: The SDT thanks you for your comments. **1. The listed activities are contemplated as minimum activities and do not preclude an entity from performing additional activities.** **2. See the Supplementary Reference Document, Section 15.2 (page 21) and FAQ II-3-A (page 19) for a discussion of this topic.**		
AECI	No	1. Tables 1a and 1b Station DC Supply: Requirement is to measure specific gravity and temperature of every cell. We believe that this test is unnecessary if voltage and internal resistance are measured. This test should only be required if other tests indicate a problem, or if the voltage and internal resistance tests are not performed. 2. Tables 1a and 1b Station DC Supply (Valve Regulated Lead-Acid Batteries): Will a limited discharge test be acceptable as a "performance or service capacity test" or is full discharge required? We believe a full discharge test will decrease battery life and suggest that only a limited discharge test be performed. 3. Tables 1a and 1b Station DC Supply (Vented Lead-Acid Batteries): What is the definition of "modified performance capacity test?"
Response: The SDT thanks you for your comments. **1. The SDT has modified the standard in consideration of your comment concerning station dc supply and has removed the requirement to measure specific gravity and temperature of every cell.** **2. The SDT does not feel that conducting a performance or service capacity test at the intervals prescribed in the standard will cause any appreciable decrease in battery life over the service life of the battery. The Protection System owner is responsible for maintaining a station dc supply that can perform as designed and conducting a performance or service capacity test will verify that a VRLA battery will satisfy the design requirements (battery duty cycle) of the dc system that a limited discharge test might not verify. If you are concerned that such a test may have implications on battery life, the standard provides an option to instead measure and trend internal cell/unit ohmic values on a 3-month interval.** **3. How to conduct a modified performance test for Vented Lead-Acid Batteries is explained in detail in various available reference books. For Vented Lead-Acid Batteries, it is a capacity test where the discharge rate(s) are modified to cover every portion of the battery's duty cycle.**		
Puget Sound Energy	No	For all tables, PSE agrees with the majority of the minimum maintenance activities established. However, the Station DC supply maintenance activities raise concern. The requirement to test that the charger will provide full rated current versus output seems to be excessive. In many cases the charger is rated far in excess of the output needed to perform its function. Also PSE is not aware of a known industry test for these and it is

Organization	Yes or No	Question 2 Comment
		not an IEEE recommended standard. Finally, PSE is unclear whether this test would diminish the charger.
Response: The SDT thanks you for your comments. The SDT modified the standard in consideration of your comment regarding battery chargers. The maintenance activities for battery chargers have been modified to remove all activities except for verification of the float voltage.		
SERC (PCS)	Yes	We agree with the majority of the activities. Below is an example where clarification is needed. 1. "Verify proper functioning of the current and voltage circuit inputs from the voltage and current sensing devices to the protective relays" under "Voltage and Current Sensing Devices Inputs to Protective Relays." How would this be done if no redundancy is available for cross-checking voltage and current sources? 2. In certain situations, "verify proper functioning" is not clear enough. Documentation of verification consistent with the entities procedures should be adequate to indicate compliance.
Response: The SDT thanks you for your comments. **1. The standard is prescribing what needs to be done, not how. Please refer to the Supplementary Reference Document Section 15.2 (page 21) and FAQ II-3-A (page 19) for examples and additional discussion.** **2. Documentation of verification consistent with your procedures is sufficient to "verify proper functioning"**		
TVA	Yes	Add clarifying statement from Table 1b for Protection System Control Circuitry (Trip Circuits) (UFLS/UVLS Systems Only) to the same section in Table 1a. Statement is "(Verification does not require actual tripping of circuit breakers or interrupting devices.)"
Response: Thank you for your comment. The SDT has modified the standard in consideration of your comment. The following was added to Table 1a: **Type of Component -** Control and trip circuits with electromechanical trip or auxiliary (UFLS/UVLS Systems Only) **Maximum Maintenance Interval -** 6 Calendar Years **Maintenance Activity** - Perform a complete functional trip test that includes all sections of the Protection System control and trip circuits, including all electromechanical trip and auxiliary contacts essential to proper functioning of the Protection System, except .that verification does not require actual tripping of circuit breakers or interrupting devices.		
JEA	Yes	If a communication system relies on a battery system independent of the "station battery", is this communication system battery under the same requirements as the "station battery"?
Response: Thank you for your comment. The proper functioning of such batteries will be addressed by the verification and monitoring of the communications system, and by addressing maintenance correctable issues related to maintenance of communication systems. See FAQ II-5-K (page		

Organization	Yes or No	Question 2 Comment
15).		
Bonneville Power Administration	Yes	
Electric Market Policy	Yes	
Entergy Services, Inc	Yes	
Georgia System Operations Corporation	Yes	
Oncor Electric Delivery	Yes	
Ontario Power Generation	Yes	
Operations and Maintenance	Yes	
Saskatchewan Power Corporation	Yes	
Western Area Power Administration	Yes	

3. Within Table 1a, the draft standard establishes maximum allowable maintenance intervals for the various types of devices defined within the definition of "Protection System", where nothing is known about the in-service condition of the devices. Do you agree with these intervals? If not, please explain in the comment area.

Summary Consideration: Most respondents disagreed with the specified maximum allowable intervals to some degree or another. The disagreements ranged over the full spectrum of activities specified in the Tables, and often corresponded to the disagreements related to the activities. The intervals within Table 1a were reconsidered (with minor changes – eliminating the 3-month control circuit activity) by the SDT when responding to the comments.

Organization	Yes or No	Question 3 Comment
Green Country Energy LLC	No	1) Protection System Control Circuitry (Trip Circuits) (except for UFLS or UVLS) also The maintenance activity causes excessive breaker operation, and the intrusive nature increases the risk of subsequent Misoperations on operating units. System configuration of many plants will require an extensive interruption of total plant production to complete the test. 2) Protection System Control Circuitry (Trip Circuits) (UFLS or UVLS systems only) The maintenance activity causes excessive breaker operation, and the intrusive nature increases the risk of subsequent Misoperations on operating units. System configuration of many plants will require an extensive interruption of total plant production to complete the test.
Response: The SDT thanks you for your comments. **1. The overall Protection System Control Circuitry can be addressed in segments, as long as all portions are verified or tested as required. Depending on the arrangement of the DC control circuit, it may be necessary to only trip the breaker itself once. See FAQ II-4-E (page 11).** **2. The overall Protection System Control Circuitry can be addressed in segments, as long as all portions are verified or tested as required. Depending on the arrangement of the DC control circuit, it may be necessary to only trip the breaker itself once. See FAQ II-4-E (page 11).**		
Public Service Enterprise Group Companies	No	1) Table 1a Station dc supply (that uses a battery and charger). The 6 year test requires that the charger perform as designed. PSE&G usually applies redundant battery chargers. PSE&G would like the drafting team to consider if it is appropriate to not require the 6 year battery charger tests if a battery owner uses primary and backup battery chargers. PSEG believes that the use of a redundant charger will maintain reliability at the same level or better level as provided by testing a single charger. 2) For protection system control circuits components (breaker trip coil only), suggest that a sub category with redundant trip coils be added with longer maintenance interval to allow for the reliability provided by

Organization	Yes or No	Question 3 Comment
		redundancy.
Response: The SDT thanks you for your comments. **1. The performance of the battery charger is critical to the performance of the protection system. The SDT has modified the standard to simplify the requirements related to maintenance of the battery charger. If condition-based maintenance is applied in accordance with Table 1b, the battery alarms could automatically (or manually) switch to the redundant charger. Redundancy may also provide more flexibility in addressing issues discovered during maintenance.** **2. Even with redundant equipment, it is essential that all equipment be tested according to the requirements of this standard to ensure proper function and to support the reliability advantages presented by redundancy. The requirements related to this subject have been extensively modified.**		
Ameren	No	1) The "zero tolerance" structure proposed combined with the large volume and complexity of Protection System components forces an entity to shorten their intervals well below maximum. We instead propose a calendar increment grace period in which a small percentage of carryover components would be tracked and addressed. For example, up to 10% of all breaker trip coils subject to the 3 month "verify breaker trip coil continuity" could carry over into the first month of the next period. And for example, up to 5% of an entity's communication channel 6 year verifications could carryover into the next year. These carryover components would be addressed with high priority in that next calendar increment. There are many barriers to 100% completion or zero tolerance. Barriers include sheer volume, obtaining outages, resource availability, coordination, and documentation (over ten thousand components in our utility alone; taking a BES outage to permit maintenance can incur a greater reliability risk than delaying the maintenance; emergent issues such as major storms impact resource availability; coordination with interconnected neighbors, their resources and maintenance timing; record keeping errors or oversights; etc.) 2) Alternatively, components with intervals less than a year should be stated in terms of the number of times annually it should be performed, rather than a short duration interval. The expectation is that they would be roughly equally spaced throughout the year; for example quarterly instead of 3 months. Comment 1 grace period would still apply to components with maximum intervals of 1 year or greater. 3) Some of our maintenance intervals are shorter than maximum. Please confirm that documentation is only to be kept for two of the entity's intervals, not two of the maximum interval. 4) Please add standard language or FAQ near 2D on p 18 that an entity can validly use an interval with % tolerance to achieve maintenance goals, as long as the applicable maximum interval is honored.
Response: The SDT thanks you for your comments. **1. The SDT is concerned that a "grace period", if permitted, would be used to establish a de-facto longer interval, and that the established intervals would thus not be measurable. Additionally, FERC Order 693 directed that NERC establish maximum maintenance intervals, and allowing for a "grace**		

Organization	Yes or No	Question 3 Comment
period" would not conform to this directive. **2. Simply stating the number of times annually that these devices must be maintained, with a tacit expectation that the maintenance be spaced throughout the year, does not ensure that they will be tested thusly. To achieve the periodicity of the testing, it is essential that the requirement specify such periodicity. The SDT is concerned that a "grace period", if permitted, would be used to establish a de-facto longer interval, and that the established intervals would thus not be measurable. Additionally, FERC Order 693 directed that NERC establish maximum maintenance intervals, and allowing for a "grace period" would not conform to this directive.** **3. The data retention has been modified in consideration of your comments. The revised language reads as follows:** The Transmission Owner, Generator Owner, and Distribution Provider shall each retain documentation of the two most recent performances of each distinct maintenance activity for the Protection System components, or to the previous on-site audit date, whichever is longer. **4. You may define your program within the parameters expressed within the standard as long as you adhere both to your program and to the Standard.**		
Exelon Generation Company, LLC	No	1. All maintenance activities should include a "grace" period to allow for changes to a nuclear generator's refueling schedule and emergent conditions that would prevent the safe isolation of equipment and/or testing of function. "Grace" periods align with currently implemented nuclear generator's maintenance and testing programs. 2. Table 1a page 6 regarding the 3 Month "Protection System Control Circuitry (Breaker Trip Coil Only) (except for UFLS or UVLS)" states that the maintenance activity shall verify the continuity of the breaker trip circuit including the trip coil. There is unclear guidance on how this activity is to be performed, particular on generator output breakers. Does this activity imply actual trip testing of the breaker itself? If so, performing this type of activity with the generator on-line puts the unit at risk without any commensurate increase in reliability to the bulk electric system. If this is the case it is requested that this particular test is extended from 3 months to 24 months to align with nuclear generating units refueling cycle. If not, and this activity is simply verification of continuity by means of light indication; then please clarify in Table 1a.
Response: The SDT thanks you for your comments. **1. The SDT considered this issue when developing the intervals, and realizes that some entities may need to perform certain maintenance activities more frequently to assure that the activities are performed within the required intervals. Specifically, for generation facilities, there would seem to be numerous opportunities within the 6-year or longer intervals to perform the required maintenance during a scheduled plant outage, and maintenance with shorter intervals can be characterized as non-intrusive maintenance, more of an inspection than anything else; the SDT believes that this maintenance can be done on-line. The SDT is concerned that a "grace period", if permitted, would be used to establish a de-facto longer interval, and that the established intervals would thus not be measurable. Additionally, FERC Order 693 directed that NERC establish maximum maintenance intervals, and allowing for a "grace period" would not conform to this directive. Please refer to Section 8 of the Supplementary Reference Document for a discussion on this issue.**		

Organization	Yes or No	Question 3 Comment
2. The SDT has removed this requirement.		
Entergy Services, Inc	No	1. A 3 month interval activity is likely to drive an entity to perform that activity every 2 months in a zero tolerance, 100% completion, mandatory compliance environment. There should be an allowance for a grace period on monthly designated activities, for instance a one month grace period, unless the intention is to have the activity performed more frequently than indicated. Additional guidance is needed on the monthly interval designations. Is it okay, for instance, to do all four tasks (3 month interval) at one time? Instinctively the answer should be "no", but if following the "calendar year" allowance, then maybe it is. Are we non-compliant on a 3 month interval task if we go one single day over the due date? Instinctively the answer should be "no", but some additional guidance should be provided. For example, the standard might be more understandable if it indicated that if the interval is "four per year" (or 3 month interval), then it is allowed to perform these tasks no less than 45 days apart from each other as long as four are done within a calendar year, etc. 2. We believe the 3 month trip coil task activity could actually shorten the life of the trip coil, introduce unpredictable trip coil failures, and increase the risk of an in-service failure of the trip coil if the verification is done by tripping the breaker each time. Increasing the risk of failure is counter-productive the intent of the standard.
Response: The SDT thanks you for your comments. **1. The standard specifies MAXIMUM allowable intervals for the various activities; entities must manage their program however they see fit to adhere to those intervals. The SDT is concerned that a "grace period", if permitted, would be used to establish a de-facto longer interval, and that the established intervals would thus not be measurable. Additionally, FERC Order 693 directed that NERC establish maximum maintenance intervals, and allowing for a "grace period" would not conform to this directive.** **2. The SDT has removed this requirement.**		
MRO NERC Standards Review Subcommittee	No	A. It looks like for unmonitored systems, breaker trip coils are to be checked for continuity every 3 months. There is no mention of auxiliary relays. In the partially monitored and fully monitored sections, trip coils and auxiliary relays are lumped in the same category at 6 calendar years each. What happened to the aux relays in the unmonitored section? Also, note that the term "trip coils" is used, not "breaker trip coils" in the type of component category. B. The maintenance interval for Protection System Control Circuitry (Trip coils and Auxiliary relays) is 6 years, but the interval for relay output contacts is 12 years when these components are partially monitored. It seems that these things all have a similar reliability. If commissioning tests are done diligently, the trip DC availability is continuously monitored and the trip coil itself is continuously monitored, no functional tests should be needed. The only thing that would be done at PM time would be to ensure that the alarming method is still

Organization	Yes or No	Question 3 Comment
		functional.
Response: The SDT thanks you for your comments. **A. The SDT has removed this requirement.** **B. In your discussion (with continuous monitoring of the trip dc and trip coil), you have effectively established most of the monitoring to move to either Table 1b or even Table 1c. You are encouraged to carefully review the Monitoring Attributes for these higher levels of monitoring; if you satisfy the attributes, you may be able to further minimize hands-on maintenance.**		
NextEra Energy Resources	No	a. (i) Protective relays, (ii) Protection Control Circuitry (Trip Circuits) and (iii) Protection System Communications Equipment and Channels should be changed from 6 calendar years to 8 calendar years. Based on FPL Group's experience and Reliability Centered Maintenance (RCM) program, FPL Group has established an 8 year program and has found that an aggressive 6 year program would not substantially increase the effectiveness of a preventative maintenance program. b. Battery visuals should be changed from 3 months to 6 months. Electrolyte levels of today's lead-calcium batteries are relatively stable for a 6 month period compared to lead-antimony batteries used in the past. c. The maximum maintenance interval for communications equipment should be changed from 3 months to 12 months. Based on FPL Group's experience and RCM program, FPL Group has established a 12 month program that is effective. d. Additionally, NextEra Energy concurs with other entities comments concerning this question: Imposing inflexible maximum interval requirements has the same basic problems as imposing inflexible minimum task requirements. The inflexible "maximum interval" approach fails to recognize the harmful effects of over-maintenance and precludes the ability of entities to tailor their maintenance program based on their configurations and operating experience. The maximum interval approach also has same perverse consequences for entities with redundant systems as the minimum interval approach. e. Furthermore, the rigid maximum interval approach embodied herein does not sufficiently take into consideration common natural disaster situations. Several of the preventive maintenance tasks proposed in this standard have a maximum interval of 3 months, which is problematic under normal circumstances and unworkable when routine maintenance activities have a much lower priority than emergency repair and restoration. An interval as short as this does not provide a sufficient maintenance scheduling horizon to complete the tasks. The SDT could attempt to address this shortfall by modifying the draft to account for natural disaster situations. For example, the FERC-approved NERC reliability standard FAC-003 for Vegetation Management does include such allowances for natural disasters, such as tornados and hurricanes. However, even if that specific problem is addressed, the fundamental problems created by an

Organization	Yes or No	Question 3 Comment
		overly prescriptive maximum interval approach remains.
Response: The SDT thanks you for your comments. **a. The SDT believes that the 6-year maximum allowable intervals, to which you refer, are appropriate. The intervals within the standard are based on the experience of the SDT and of the NERC System Protection and Control Task Force (SPCTF). The SPCTF also validated these intervals via an informal survey that represented about 2/3 of the net-energy-for-load within NERC, and by comparison to IEEE surveys. See Supplementary Reference Document Section 8 (page 9). An entity may implement a Performance Based maintenance program if they wish to apply their experience.** **b. The SDT agrees that a healthy modern lead acid battery can go for extended periods of time beyond 3 months without requiring watering. However, checking cell electrolyte level not only indicates the need for battery watering, it is an indication of an individual cell's health and needs to remain at the Maximum Maintenance Interval of 3 months. To avoid the confusion that the Maintenance Activity listed in Table 1 was to water the battery at the specified 3 month interval, the Drafting Team has changed the wording of the Maintenance Activity from "verify proper" to "check" electrolyte level.** **c. The 3 month interval is for inspection of unmonitored equipment. The SDT felt that this is appropriate for carrier channels or for leased audio channels that have a chance of failure and would result in an overtrip or failure to trip if ignored. It is possible to extend the interval for performance based systems if the entity has applicable data.** **d. FERC Order 693 directs that NERC establish maximum allowable intervals. For entities that wish to establish a performance-based maintenance program using experience, the standard DOES allow for that.** **e. The SDT believes that the level of prescription within the standard is necessary to satisfy the guidance in FERC Order 693, and also to address observations from the Compliance Monitoring entities (the Regional Entities and NERC) that PRC-005-1 is excessively general. FERC Order 672 also specifies that NERC Standards should be clear and unambiguous. The SDT has therefore defined the minimum activities necessary to implement an effective PSMP.**		
CenterPoint Energy	No	a. See CenterPoint Energy's comments made in response to question 2. Imposing inflexible maximum interval requirements has the same basic problems as imposing inflexible minimum task requirements. The inflexible "maximum interval" approach fails to recognize the harmful effects of over-maintenance and precludes the ability of entities to tailor their maintenance program based on their configurations and operating experience. The maximum interval approach also has same perverse consequences for entities with redundant systems as the minimum interval approach. b. Furthermore, the rigid maximum interval approach embodied herein does not sufficiently take into consideration common natural disaster situations. Several of the preventive maintenance tasks proposed in this standard have a maximum interval of 3 months, which is problematic under normal circumstances and unworkable when routine maintenance activities have a much lower priority than emergency repair and restoration. An interval as short as this does not provide a sufficient maintenance scheduling horizon to complete the tasks. The SDT could attempt to address this shortfall by modifying the draft to account for natural disaster situations. For example, the FERC-approved NERC reliability standard FAC-003 for

Organization	Yes or No	Question 3 Comment
		Vegetation Management does include such allowances for natural disasters, such as tornados and hurricanes. However, even if that specific problem is addressed, the fundamental problems created by an overly prescriptive maximum interval approach remains.
Response: The SDT thanks you for your comments. **a. The SDT believes that the level of prescription within the standard is necessary to satisfy the guidance in FERC Order 693, and also to address observations from the Compliance Monitoring entities (the Regional Entities and NERC) that PRC-005-1 is excessively general. FERC Order 672 also specifies that NERC Standards should be clear and unambiguous. The SDT has therefore defined the minimum activities necessary to implement an effective PSMP.** **b. The SDT considered this issue when developing the intervals, and realizes that some entities may need to perform certain maintenance activities more frequently to assure that the activities are performed within the required intervals. Specifically, for generation facilities, there would seem to be numerous opportunities within the 6-year or longer intervals to perform the required maintenance during a scheduled plant outage, and maintenance with shorter intervals can be characterized as non-intrusive maintenance, more of an inspection than anything else; the SDT believes that this maintenance can be done on-line. The SDT is concerned that a "grace period", if permitted, would be used to establish a de-facto longer interval, and that the established intervals would thus not be measurable. Additionally, FERC Order 693 directed that NERC establish maximum maintenance intervals, and allowing for a "grace period" would not conform to this directive. Please refer to Section 8 of the Supplementary Reference Document (page 9) for a discussion on this issue.**		
FirstEnergy	No	Although we agree with the proposed maintenance intervals, there may be extenuating circumstances beyond an entity's control that could delay maintenance on a particular protection system. We ask the SDT to consider adding a footnote to these intervals that allows a grace period of up to three months when outages necessary for maintenance must be delayed due to unusual system conditions or other issues where an outage would be detrimental to the entity's system.
Response: The SDT thanks you for your comments. The SDT considered this issue when developing the intervals, and realizes that some entities may need to perform certain maintenance activities more frequently to assure that the activities are performed within the required intervals. Specifically, for generation facilities, there would seem to be numerous opportunities within the 6-year or longer intervals to perform the required maintenance during a scheduled plant outage, and maintenance with shorter intervals can be characterized as non-intrusive maintenance, more of an inspection than anything else; the SDT believes that this maintenance can be done on-line. The SDT is concerned that a "grace period", if permitted, would be used to establish a de-facto longer interval, and that the established intervals would thus not be measurable. Additionally, FERC Order 693 directed that NERC establish maximum maintenance intervals, and allowing for a "grace period" would not conform to this directive. Please refer to Section 8 of the Supplementary Reference Document (page 9) for a discussion on this issue.		
American Transmission Company	No	1. ATC is concerned that the proposed standard would result in entities being required to use outdated testing techniques and or practices. We believe that the standard should identify the "what" and not the "how". The identification of specific testing techniques and/or practices would likely result in entities being

Organization	Yes or No	Question 3 Comment
		prevented from implementing improved techniques and/or practices. (The standard would have to be updated and receive FERC approval before entities could test/implement improved testing techniques and/or practices.) 2. An example of the standard directing the how is with station batteries. The "specific gravity" test, proposed in the standard, is being used less or not at all by some registered entities because a more accurate method that is less intrusive and provides more accurate results has been developed. (This standard would basically require entities to go backwards in testing practices.)This standard should not prevent the use of improved techniques and/or practices.
Response: The SDT thanks you for your comments. **1. In consideration for your concern, the Drafting Team has revised Table 1 to identify more of what is required for the station dc supply activities and eliminated most of the "how to do it".** **2. All references to specific gravity and temperature testing have been removed from the revised standard.**		
City Utilities of Springfield, MO	No	CU agrees in general with many of the maximum maintenance intervals. However, we disagree with the necessity to verify the continuity of trip coils every 3 months. We would be interested to know what basis the committee used to arrive at all intervals. Furthermore, it is our opinion that even if a component is unmonitored, the interval should not surpass the manufacturer's recommendations.
Response: The SDT thanks you for your comments and has removed this requirement.		
ITC Holdings	No	1. Does the standard require that time or condition based maintenance programs monitor countable events to identify significant problems in particular relay segments, and then adjust the maintenance interval accordingly? 2. On page 6: Please clarify the use of "Calendar Year" Our understanding is that if a relay is maintained on August 31, 2003 on a 6 year interval, it will not be overdue until January 1, 2010. Is this correct?? 3. On Page 7: What is the basis for 18 months? We believe 2 calendar years would be more appropriate. 4. On Pages 6, 10: What is the basis of the 6 calendar year interval for functional trip tests? We request that this be changed to a 10 calendar year interval. We follow a 10 calendar year interval that has proven to be satisfactory. Decreasing the interval to 6 calendar years will result in a major increase in our maintenance expenses without a corresponding increase in reliability. 5. On Page 9: If it is being verified ok every 3 months, what is the basis of the 6 calendar year interval for Communication equipment? ITC communications systems are partially monitored and therefore required to

Organization	Yes or No	Question 3 Comment
		perform this testing every 12 years. However, ITC would like to know the basis of the 6 year interval for informational purposes. 6. On pages 6, 8, 11, 13, 14 and 19: The maximum maintenance interval (when the associated UVLS or UFLS system is maintained) should be shown as the actual "6 Calendar Years".? 7. On Page 1 of Attachment A: Please provide an example in the reference of the proper way of adjusting the interval based on test results. 8. On Pages 7, 8, 12: It is our understanding that adequate maintenance can be achieved by performing either one of the two maintenance activities in cases where there is an "or", is that correct? 9. On Page 14: For the bottom two rows on page 14 we believe there is a typo and it should read "Level 2" not "Level 1". 10. On Page 13: Do power line carrier schemes that provide a remote alarm if a daily check back test fails, meet level 2 monitoring requirements? 11. In Table 1: What is the basis for the 6 year interval for the battery systems? This test would be an additional test for ITC. We would prefer to perform this additional test with the relay periodic maintenance on a 10 year interval.

Response: The SDT thanks you for your comments.

1. No, the standard does not require that countable events be analyzed for determination of intervals in time-based or condition-based maintenance programs. However, excessive poor operation may trigger additional activities as part of a corrective action plan per PRC-004 in response to Misoperations.

2. Your understanding is incorrect. A maintenance activity last completed in 2003 on a 6-year interval would next need to be maintained sometime in 2009. (See Supplementary Reference Document Section 8.4, page 13)

3. The SDT believes that 18-month is the appropriate interval, based on common industry practice.

4. The SDT believes that 6-years is the appropriate interval, based on common industry practice. For entities that wish to establish a performance-based maintenance program using experience, the standard DOES allow for that.

5. The 6 year interval is mostly driven by the needs of power line carrier channels and the use of analog auxiliary tuning components in the communications systems. The relay communications systems intervals were based on the experiences of SDT and NERC System Protection Committee Task Force members.

6. The SDT has modified the standard in consideration of your comment to include the specific intervals for the various components related to UFLS/UVLS, with the exception of the dc supply. The maintenance for the dc supply for UFLS/UVLS was left related to the maintenance of the

Organization	Yes or No	Question 3 Comment
UVLS/UFLS system because the SDT believed that this activity should be tied to the specific intervals needed for the relays. **7. See FAQ IV-3-H (page 26).** **8. You are correct in your statement that the Maintenance Activity of verifying that the station battery can perform as designed can be met by completing either of the two activities listed in Table 1 in the prescribed Maximum Maintenance Interval.** **9. Thank you. You are correct; these table entries have been modified accordingly.** **10. Yes. A remote alarm daily auto-check back as you describe satisfies the Level 2 monitoring attributes for channel performance in a power line carrier system.** **11. The SDT believes that extending the Maximum Maintenance Interval for station batteries beyond that listed in Table 1 would degrade the Protection System by not detecting compromises to the performance of the station dc supply during the extended interval.**		
Platte River Power Authority Maintenance Group	No	Electro-mechanical relays are historically out of tolerance well before the 6 year maximum allowable maintenance intervals defined within table 1a.
Response: The SDT thanks you for your comments. The SDT considered this issue when developing the intervals, and realizes that some entities may need to perform certain maintenance activities more frequently to assure that the activities are performed within the required intervals.		
Florida Municipal Power Agency, and its Member Cities	No	1. FMPA agrees in general with many of the maximum maintenance intervals; however we have been unable to determine what basis was used to arrive at the time based intervals provided in the tables. Further explanation would be appreciated 2. FMPA is concerned with the use of the term “continuous” in Table 1c. As stated, it would seem that, on loss of communications that would communicate the alarm, thereby causing a loss of “continuous” monitoring and alarming, the entity who invested in a reliability improving monitoring system would be found non-compliant with an infinitesimal maintenance period required for “continuous” monitoring. Therefore, FMPA recommends using “not applicable” or some other term in this column.
Response: The SDT thanks you for your comments. **1. The intervals within the standard are based on the experience of the SDT and of the NERC System Protection and Control Task Force (SPCTF). The SPCTF also validated these intervals via an informal survey that represented about 2/3 of the net-energy-for-load within NERC, and by comparison to IEEE surveys. See Supplementary Reference Document Section 8 (page 9).** **2. The SDT believes that the maintenance is indeed being done “continuously”. If the alarming method is not functional, you’ve fundamentally dropped back to Level 1 or Level 2 monitoring, depending on the component.**		

Organization	Yes or No	Question 3 Comment
E.ON U.S.	No	1. Generally, E.ON U.S. requests that the SDT provide the basis for the proposed changes in maintenance time lines. E ON U.S.'s existing maintenance intervals are based on actual operating experience. Not having been provided with the basis for the proposed intervals, the time lines appear arbitrary. E.ON U.S. currently has an 8-year interval for combustion turbines vs. the 6-year interval provided here. The E.ON U.S. interval is based on the Company's experience with this equipment. E.ON U.S. suggests that the SDT provide some consideration to individual entities historic practices. 2. It is difficult to track "18 months". Maintenance intervals should be in expressed in number of years. 3. E ON U.S. also does not understand the basis for the 3 months maintenance schedule on breaker trip coils. Typically, the circuit breaker closed indication is wired through the breaker trip coil. Thus there could not be a breaker closed indication without a good breaker trip coil. So, this test should be considered continuous monitoring which may not even require documentation except in case of failure.
Response: The SDT thanks you for your comments. **1. See Supplementary Reference Document, Section 8 (page 9). An entity's historical practices and results can be used to establish a performance-based maintenance program as described within the standard.** **2. The SDT believes that the 18-month interval is appropriate. If you wish, you may do these activities more frequently to aid in your maintenance tracking, as long as you adhere to the requirements within the standard.** **3. If this indication is local (for example, a lamp), 3-month inspections of the lamp state are necessary to satisfy the requirement. If the indication is an alarm to a location such as a control room, control center, etc, this may satisfy for either Level 2 or Level 3 monitoring as you suggest.**		
Transmission Owner	No	a. i) Protective relays, ii) Protection Control Circuitry (Trip Circuits) and iii) Protection System Communications Equipment and Channels should be changed from 6 calendar years to 8 calendar years. Based on FPL's experience and Reliability Centered Maintenance (RCM) program, FPL has established an 8 year program and has found that an aggressive 6 year program would not substantially increase the effectiveness of a preventative maintenance program. b. Battery visuals should be changed from 3 months to 6 months. Electrolyte levels of today's lead-calcium batteries are relatively stable for a 6 month period compared to lead-antimony batteries used in the past. c. The maximum maintenance interval for communications equipment should be changed from 3 months to 12 months. Based on FPL's experience and RCM program, FPL has established a 12 month program that is effective.
Response: The SDT thanks you for your comments.		

Organization	Yes or No	Question 3 Comment
a. The SDT believes that the 6-year interval is appropriate. An entity may implement a Performance Based maintenance program if they wish to apply their experience. **b. The SDT agrees that a healthy modern lead acid battery can go for extended periods of time beyond 3 months without requiring watering. However, checking cell electrolyte level not only indicates the need for battery watering, it is an indication of an individual cell's health and needs to remain at the Maximum Maintenance Interval of 3 months. To avoid the confusion that the Maintenance Activity listed in Table 1 was to water the battery at the specified 3 month interval, the Drafting Team has changed the wording of the Maintenance Activity from "verify proper" to "check" electrolyte level.** **c. The 3 month interval is for inspection of unmonitored equipment. The SDT felt that this is appropriate for carrier channels or for leased audio channels that have a chance of failure and would result in an overtrip or failure to trip if ignored. It is possible to extend the interval for performance based systems if the entity has applicable data.**		
Illinois Municipal Electric Agency	No	1. IMEA is concerned the maximum allowable maintenance intervals may be too prescriptive for transmission subsystems that essentially operate radially. 2. Please see comment under Question 7. 3. Given the magnitude of reliability-related initiatives currently in progress, additional time is needed to evaluate these intervals, particularly for communications equipment, dc supply, and UFLS relays.
Response: The SDT thanks you for your comments. **1. The intervals are established for Protection Systems on BES components. If you believe that some of your system components are not BES that is an issue relative to your region's BES definition.** **2. See response to comment under Question 7.** **3. An Implementation Plan is provided to allow systematic implementation of these intervals. If you are concerned about the time available to develop comments on posted drafts, be advised that the posting period is determined according to the NERC Reliability Standards Development Process. The SDT is providing the maximum comment time available.**		
PacifiCorp	No	No comment.
Duke Energy	No	1. Our comments are limited to Table 1a. More clarity is needed for many of the Maintenance Activities before assessing whether or not the intervals are reasonable. But as a general comment we would like to understand the basis used to develop all of the intervals, and how that basis compares with research done by the Electric Power Research Institute (EPRI). It is our understanding that NERC did an industry survey of maintenance intervals and we would like to see the results of that survey as well. Specific comments:

Organization	Yes or No	Question 3 Comment
		2. Protective Relays 6 calendar years is okay. 3. Voltage and Current Sensing Devices Inputs to Protective Relays We question the logic for a 12-year interval. Proper functioning should be verified at commissioning, and then anytime thereafter if changes are made in a PT or CT circuit. Additional periodic checks may be warranted as suggested in Table 1A, however no additional checking should be required where circuit configuration will inherently detect problems with a PT or CT. For example, PTs & CTs that are monitored through EMS or microprocessor relays will be alarmed when they are out of specification. 4. Protection System Control Circuitry (Breaker Trip Coil Only) (except for UFLS or UVLS) In locations where the continuity of the circuit is not monitored (via a light in the path or through a microprocessor relay) this would be a very complicated test, which could impact reliability, especially if done every three months. 5. Protection System Control Circuitry (Trip Circuits) (except for UFLS or UVLS) Need clarity on exactly what the activity is to include. We believe proving one output all the way to the trip coil is appropriate. Proving every output and every auxiliary contact, to the trip coil would be unnecessarily invasive and could impact reliability, even if done every 6 calendar years. 6. Protection System Control Circuitry (Trip Circuits) (UFLS/UVLS Systems Only) Interval is okay, but we disagree with tripping the breakers proving the output of the relay should be sufficient. Systems that have all load shed on distribution circuits should require trip output be confirmed but should not be required through to the trip coil due to constraints in tying distribution load. 7. Station dc supply (that has as a component any type of battery) 3 month and 18 month intervals are probably okay, depending on what is required to “verify continuity and cell integrity of the entire battery” and “inspect the structural integrity of the battery rack”. 8. Station dc supply (that has as a component Valve Regulated Lead-Acid batteries) 3 calendar years and 3 month intervals are probably okay, depending on what is required for the “performance or service capacity test”. 9. Station dc supply (that has as a component Vented Lead-Acid batteries) 6 calendar year and 18 month intervals are probably okay, depending on what is required for the “performance, service or modified performance capacity test”. 10. Protection system communication equipment and channels 3 months and 6 calendar years seem reasonable, depending upon what is included in the substation inspection, and what is required for power-line carrier systems. 11. UVLS and UFLS relays that comprise a protection scheme distributed over the power system Can’t comment on the 6 calendar year interval until we get more clarity regarding the meaning of “distributed over

Organization	Yes or No	Question 3 Comment
		the power system".
Response: The SDT thanks you for your comments. **1. See Supplementary Reference Document, Section 8 (page 9).** **2. The SDT thanks you for your support.** **3. For unmonitored systems, the SDT believes that the interval specified in Table 1a is appropriate. If alarming is available for anomalies, you may be able to use Table 1c with continuous monitoring.** **4. Table 1a has been modified to remove the activities to which you refer.** **5. See Supplementary Reference Document, Section 15.3 (page 22).** **6. The requirements relating to Protection System Control Circuitry for UFLS/UVLS only do not require tripping of the breaker.** **7. Thank you for agreeing with the Maximum Maintenance intervals associated with the Maintenance Activities. The SDT has modified the standard concerning the requirement to verify cell integrity (See FAQ II-5-C, page 12), and continuity (See FAQ II-5-D, page 13) and inspecting for the structural integrity of the battery rack (See FAQ II-5-H, page 15).** **8. How to conduct a performance and service capacity test for Valve Regulated Lead-Acid batteries are explained in detail in various available reference books. One of the options available to the Protection System owner who is responsible for maintaining a station dc supply that can perform as designed is to conduct a performance or service capacity test within the Maximum Maintenance Interval of Table 1 that will verify that a VRLA battery will satisfy the design requirements (battery duty cycle) of the dc system.** **9. How to conduct a performance service or modified performance capacity test for Vented Lead-Acid Batteries is explained in detail in various available reference books.** **10. These intervals are for power line carrier channels as well as other types of communications channels.** **11. See FAQ II-7-C (page 19).**		
Electric Market Policy	No	Recommend that all Level 1 three-month maintenance intervals be changed to a quarterly based system where only 4 inspections are required per year. Given a 3 month maximum interval, activities would need to be scheduled every 2 months, which would result in six inspections per year. Our experience of four inspections per year has proven to be successful.
Response: The SDT thanks you for your comments. The SDT believes that the "3 Calendar Month" interval is necessary to maintain the periodicity of the maintenance activities. "Once per calendar quarter" would allow up to a 6-month practical interval, which would not maintain this periodicity. This DOES permit entities to use four inspections per year provided that they carefully manage their maintenance activities.		

Organization	Yes or No	Question 3 Comment
SERC (PCS)	No	Recommend that all Level 1 three-month maintenance intervals be changed from 3 months to quarterly. Given a 3 month maximum interval an entity would need to schedule these tasks every 2 months. This would result in six inspections per year. In the experience of many of our utilities, four inspections per year have proven to be successful.
Response: The SDT thanks you for your comments. The SDT believes that the "3 Calendar Month" interval is necessary to maintain the periodicity of the maintenance activities. "Once per calendar quarter" would allow up to a 6-month practical interval, which would not maintain this periodicity. This DOES permit entities to use four inspections per year provided that they carefully manage their maintenance activities.		
Indianapolis Power & Light Co.	No	See comments in number 2 above.
Response: The SDT thanks you for your comments. See response to comments in Question 2.		
Austin Energy	No	See item # 10 Comments
Response: The SDT thanks you for your comments. See Question #10 Response		
Wolverine Power Supply Cooperative, Inc.	No	See question 2 response
Response: The SDT thanks you for your comments. See Question #2 Response		
SCE&G	No	Several maximum maintenance intervals are 3 months. Since this is an absolute maximum period, entities would need to schedule on a 2 month basis to assure the 3 month maximum is met, i.e., 6 times per year. We recommend that 3 month periods be increased to 4 months which allows scheduling every 3 months. Other methods of achieving the same result are to state periodic requirements of quarterly or 4 times per year.
Response: The SDT thanks you for your comments. The SDT believes that the "3 Calendar Month" interval is necessary to maintain the periodicity of the maintenance activities. "Once per calendar quarter" or "four times per year" would allow up to a 6-month practical interval, which would not maintain this periodicity. This DOES permit entities to use four inspections per year provided that they carefully manage their maintenance activities.		
Wisconsin Electric	No	Similar to comments in #7 above: It is our practice on distribution-level protection systems to utilize a 6 year interval plus/minus 1 year to accommodate potential scheduling conflicts. This is consistent with other LSE's relay testing practices as well. Thus the potential 7 year maintenance interval would be a violation of the draft

Organization	Yes or No	Question 3 Comment
		requirements. The maintenance intervals in this standard should be increased accordingly for distribution protection system equipment.
Response: The SDT thanks you for your comments. The SDT considered this issue when developing the intervals, and realizes that some entities may need to perform certain maintenance activities more frequently to assure that the activities are performed within the required intervals. Specifically, for generation facilities, there would seem to be numerous opportunities within the 6-year or longer intervals to perform the required maintenance during a scheduled plant outage, and maintenance with shorter intervals can be characterized as non-intrusive maintenance, more of an inspection than anything else; the SDT believes that this maintenance can be done on-line. The SDT is concerned that a "grace period", if permitted, would be used to establish a de-facto longer interval, and that the established intervals would thus not be measurable. Additionally, FERC Order 693 directed that NERC establish maximum maintenance intervals, and allowing for a "grace period" would not conform to this directive. Please refer to Section 8 of the Supplementary Reference Document for a discussion on this issue.		
Pepco Holdings Inc.	No	Table 1a requires verification of the continuity of the breaker trip circuit every three months in the absence of a trip coil monitor. Recommend maintenance interval to match that for other protection system control circuitry (6 years).
Response: The SDT thanks you for your comments. The SDT has modified the standard to remove the requirement to which you refer.		
Nebraska Public Power District	No	Table 1a, for Station DC supply (that has as a component - Valve Regulated Lead-Acid batteries) establishes a Maximum Maintenance Interval of 3 Calendar Years for the following Maintenance Activity: Verify that the station battery can perform as designed by conducting a performance or service capacity test of the entire battery bank. What is the basis for this interval? NPPD's experience indicates that a 5 Year interval is adequate, especially during the early service life of the battery bank, with increasing frequency as the bank ages.
Response: Thank you for your comment concerning the Maximum Maintenance Interval for Valve Regulated Lead-Acid batteries (VRLA). Due to the failure mode and designed service life of VRLA batteries compared to a Vented Lead-Acid batteries, the SDT believes that extending capacity testing of a VRLA battery beyond the maximum maintenance interval of 3 calendar years in Table 1 cannot be justified regardless of what the battery manufacturers of VRLA batteries recommend. This is especially true in the later periods of service life beyond 3 calendar years as noted by many utilities requiring total replacement of their VRLA batteries after 4 years of service. It appears that your practices are actually addressing Vented Lead Acid batteries, rather than Valve Regulated Lead-Acid batteries.		
Dynegy	No	The 3 month interval in Table 1a for verification of the continuity of the breaker trip circuit is only feasible if this verification can be done by inspection versus testing (see Response to Question 2).
Response: The SDT thanks you for your comment and has removed the requirement.		

Organization	Yes or No	Question 3 Comment
Southern Company	No	1. The 3 month intervals specified for the trip coil monitoring and communication circuit testing are too frequent. Our experience is that trip coils rarely burn open and don't need to be checked this often. If no monitoring currently exists, manually checking the circuit (until a time where monitoring can be installed) may inadvertently cause a trip. This adds risk to the reliability. Thus, requiring the trip circuits to be tested every 3 months may reduce the reliability of the BES. 2. Protection System Control Circuitry (Breaker Trip Coil Only) (Except for UFLS or UVLS) In order to reduce the risk of reducing Bulk Electric System reliability a better time interval for testing un-monitored trip coils would be 12 months. This may need to be 24 months for Nuclear Generating units. 3. Some allowance for a grace period (beyond the specified intervals) should be considered for all classifications. Outage schedules are known to change unexpectedly due to unforeseen circumstances. A grace period tolerance of +25% for specified maintenance intervals less than 12 months and of +1yr for those intervals specified as greater than 12 months is recommended. Typically at a nuclear plant a grace period is allowed by plant procedures. This grace period is defined as an additional 25 percent of the original schedule interval for the task. The grace period is provided as reasonable flexibility to allow for alignment with surveillance activities and equipment maintenance outages and to better manage the use of station resources. Some maintenance activities will require an outage to perform the work. Refueling outages are typically performed on an 18 month or 24 month refueling cycle. However, refueling outages do not always fall exactly on that interval. It is possible that the duration between one outage to the next may exceed 18 or 24 months. For activities that are required to be complete on a calendar year cycle this should not be an issue since the outages are normally scheduled several months prior to the end of the year. However, if the interval is a monthly interval there could be a problem with scheduling the maintenance such that it does not impact planned maintenance activities, surveillance requirements, and station resources. 4. Tables 1a, 1b and 1c have several instances where inspection and testing of DC circuits or components has a specified interval of 18 months. At nuclear generating stations, such tests on station battery banks and associated chargers incur unacceptable risk if performed with the unit on line and a unit outage is required for this testing. A number of nuclear plants are on two-year shutdown cycles and we request that the 18 month intervals be changed to two (2) (calendar) year intervals to accommodate this. 5. Protection System Control Circuitry (Breaker Trip Coil Only) (Except for UFLS or UVLS) Based on past performance, a complete functional test trip every 6 years is not warranted. This complete functional test introduces additional risk to our maintenance program, not only from a human error perspective, but also from the additional frequency of switching and outages required. Our experience has shown that 12 years is an appropriate maximum time interval (rather than 6 years.)
Response: The SDT thanks you for your comments.		

Organization	Yes or No	Question 3 Comment
1. The SDT believes that such maintenance of the communications will primarily be performed by inspection monitoring lamps and so forth. The trip coil requirements to which you refer have been removed. **2. This activity is primarily inspection-based, involving no invasive testing. The stated intervals seem appropriate.** **3. The SDT considered this issue when developing the intervals, and realizes that some entities may need to perform certain maintenance activities more frequently to assure that the activities are performed within the required intervals. Specifically, for generation facilities, there would seem to be numerous opportunities within the 6-year or longer intervals to perform the required maintenance during a scheduled plant outage, and maintenance with shorter intervals can be characterized as non-intrusive maintenance, more of an inspection than anything else; the SDT believes that this maintenance can be done on-line. The SDT is concerned that a "grace period", if permitted, would be used to establish a de-facto longer interval, and that the established intervals would thus not be measurable. Additionally, FERC Order 693 directed that NERC establish maximum maintenance intervals, and allowing for a "grace period" would not conform to this directive. Please refer to Section 8 (page 9) of the Supplementary Reference Document for a discussion on this issue.** **4. All Maintenance Activities listed in Tables 1a, 1b, and 1c related to the station dc supply that have a Maximum Maintenance Interval shorter than two (2) (calendar) years are necessary inspection, checking or verification activities routinely performed on the station dc supply with it in service and without posing an unacceptable risk. The Drafting team feels that to extend these activities beyond their Maximum Maintenance Intervals listed in Table 1 would jeopardize the station dc supply.** **5. The SDT believes that the 6-year interval for this activity is appropriate. If you experience supports a longer interval, the standard permits you to utilize Performance-Based maintenance.**		
AEP	No	The availability to perform maintenance of many protection systems is dictated by the load or customer that is connected. Many of these industrial customers, who are outside the jurisdiction of NERC requirements, operate 24X7 and see the outages required for maintenance as a nuisance and a loss of revenue. How can the owner be held non-compliant for not meeting the intervals when they may not control the timing? Comments expanded in question 10 responses.
Response: The SDT thanks you for your comments. This non-compliance would be addressed via contract law; these contracts are described in the Statement of Compliance Registry.		
US Bureau of Reclamation	No	The definition of Protection System components does not add clarity. The standard proposes including stations service transformers for generation facilities, however, the protection system definition does not include those elements. The inclusion of station service transformers would only be appropriate if the protection associated with the transformer results in the tripping of a transmission element.
Response: The SDT thanks you for your comments. The applicability to station service transformers emphasizes the impact of those components on the operability of the associated generator. They are not themselves Protection System components; however, maintenance of the Protection System		

Organization	Yes or No	Question 3 Comment
components on those system elements is required per the Standard. See FAQ III-2-A (page 20).		
Ohio Valley Electric Corp.	No	The documentation requirements for the inspection activities with three month intervals are oppressive and should not be a part of the protection system maintenance standard.
Response: The SDT thanks you for your comments. The SDT disagrees; it is left to the entity to adopt effective methods to document these activities.		
CPS Energy	No	1. The first problem that I have is the 3 Months for the Protection system communications equipment and channels component. My main concern with this interval is that it is so extremely short and I am concerned that there may not be any rational behind it. What studies, surveys, or statistical data were used to determine that 3 months is necessary to protect the reliability of the BES? It doesn't make sense that a communications signal needs to be checked every 3 months but the protective relay that utilizes that scheme needs to be checked at most only every 6 years. 2. What concerns me the most with the 3 month interval for my company is with on-off power line carrier DCB schemes? We only have these schemes on tie lines, and it can be difficult to implement a checkback system with another utility who might utilize different carrier equipment. This type of scheme is also intended to be inherently insecure and is frequently more or less tested with faults in the system. The SPCTF should do surveys to determine what is presently done with these type of systems or provide some other rationale for the communication requirements. It is not totally clear from the documents, but it appears that the only way to avoid the 3 month check for an on-off power-line carried DCB scheme is to have an automated check back scheme. Is this correct? Or is alarming from the carrier equipment adequate? 3. My second problem is with the 6 year maximum maintenance interval for the breaker trip coil in tables 1b and 1c. By having to verify that each breaker trip coil is electrically operated, you might as well perform a functional test to test the protection system control circuitry. Electrically operating the trip coil tests the breaker as much as it test the actual trip coil. Also, if you have a primary and secondary trip coil, is it really necessary to test this often? What studies or statistical data were used to determine that testing the breaker trip coils every 6 years is necessary to protect the reliability of the BES? 4. My third problem is with the intervals requirements for the UVLS/UFLS systems. Other than testing and calibration of electromechanical UVLS/UFLS, most other tests probably should require at most 10 years for these types of systems. These systems don't require the performance level of most other systems as stated in the supplementary reference. The testing and calibration of electromechanical UFLS should possibly be even shorter than the 6 year requirement due to problems with drift with these type of relays. What studies, surveys, or statistical data were used to determine the intervals in related to UFLS/UVLS.?
Response: The SDT thanks you for your comments.		

Organization	Yes or No	Question 3 Comment
1. The 3 month intervals are for unmonitored equipment and are based on experience of the relaying industry represented by the SDT, the SPCTF and review of IEEE PSRC work. Relay communications using power line carrier or leased audio tone circuits are prone to channel failures and are proven to be less reliable than protective relays. **2. The automated check back systems are common ways to verify the integrity of the relay communication channel. It would only be moved to Level 2 if the check back test is monitored remotely and the tests are run daily. Without check back equipment, it will be necessary to have personnel at both ends and manually initiate a signal and verify that the remote equipment operates.** **3. In the experience of the SDT and the NERC SPCTF, the 6-year interval is appropriate. The SPCTF also conducted an informal survey of entities representing approximately 2/3 of the NERC net-energy-for-load and a review of IEEE surveys to validate these intervals. See the Supplementary Reference Document, Section 8 (page 9).** **4. In the experience of the SDT and the NERC SPCTF, the 6-year interval is appropriate. The SPCTF also conducted an informal survey of entities representing approximately 2/3 of the NERC net-energy-for-load and a review of IEEE surveys to validate these intervals. See the Supplementary Reference Document, Section 8 (page 9). The maintenance of the other Protection System components associated with UFLS/UVLS is specifically stated to correspond with the intervals for the relays themselves.**		
Consumers Energy Company	No	1. The interval for Protection System Control Circuitry (breakers trip coil) should be set at 12 years since this is a scheme test. This test requires testing of the circuit and not just the coil. 2. The interval for Protection System Control Circuitry (trip circuit) should be set at 12 years since this is a scheme test. The Protection System Control Circuitry (trip circuit) test would require tripping off customers on radial distribution circuits which is not acceptable. 3. The interval for a station battery service test (lead acid) should be set at 5 years based on NFPA 70B.
Response: The SDT thanks you for your comments. **1. The SDT believes that the intervals indicated in the standard are appropriate. The standard allows the use of Performance-Based maintenance if your experience supports it.** **2. The SDT believes that the intervals indicated in the standard are appropriate. The standard allows the use of Performance-Based maintenance if your experience supports it. The standard applies only to Protection Systems on BES components as established by your regional BES definition.** **3. NFPA 70B is a recommended practice which is voluntary, and is not a standard that establishes any requirements that must be measurable. NERC standard PRC-005 requirements are loosely aligned with some of the NFPA standards. However, the Maximum Maintenance Intervals required in PRC-005-2 were established to be measurable and enforceable. If an owner chooses to perform the Maintenance Activities outlined in Table 1 of the standard at a lesser interval the owner is free to do so.**		
RRI Energy	No	1. The intervals need to be defined on a calendar quarters or calendar years, especially for intervals listed as 3 months. The demonstration of maintenance on rolling three-month intervals will be an onerous record

Organization	Yes or No	Question 3 Comment
		keeping task, particularly when relying upon planning and tracking software that scheduled recurring tasks on the same day of an interval. 2. Given the magnitude of the number of trip circuits, the requirements set an un-acceptable trap of non-compliance from a record keeping perspective. The resources required to keep and maintain flawless records are too much to justify the intervals. A non-compliance is the result if the breakers that happen to be in an open state when the officially "documented" inspection is recorded and is missed by accidental oversight on follow-up. If the requirement remains, it should be waived for any breaker that is operated during the defined interval.
Response: The SDT thanks you for your comments. **1. The SDT believes that the "3 Calendar Month" interval is necessary to maintain the periodicity of the maintenance activities. "Once per calendar quarter" or "four times per year" would allow up to a 6-month practical interval, which would not maintain this periodicity. This DOES permit entities to use four inspections per year provided that they carefully manage their maintenance activities.** **2. The dc control circuit maintenance to which you refer has been removed from the standards. The SDT disagrees that the record keeping is excessively burdensome; it is left to the entity to adopt effective methods to document these activities.**		
Progress Energy	No	The rational for microprocessor-based relay intervals is examined, but all others are strictly based on industry weighted average of survey results. We believe the team should use a more empirical, documented approach to determining these intervals, as many companies have longer intervals that they currently have documented for their basis. If these have been accepted as satisfactory in previous audits, why should they be required to change just to meet an arbitrary number?
Response: The SDT thanks you for your comments. The standard permits entities to use Performance-based maintenance if they have documented experience which supports doing so.		
Northeast Power Coordinating Council	No	1. We question whether any maintenance activity should be as long as 12 years. Considering the rate of change in personnel and technology, the working group should reduce the time period by redefining the requirement if necessary, or eliminate the standard requirement. 2. In addition, the DC components have too many tests at confusing intervals. Confusion will make it difficult to implement or follow the exact method used.
Response: The SDT thanks you for your comments. **1. In the experience of the SDT and the NERC SPCTF, the intervals within the standard are appropriate. The SPCTF also conducted an informal survey of entities representing approximately 2/3 of the NERC net-energy-for-load and a review of IEEE surveys to validate these intervals. (See**		

Organization	Yes or No	Question 3 Comment
Supplementary Reference Document, Section 8.4, page 13) **2. The SDT has modified the standard in consideration of your comments and simplified the maintenance activities associated with dc supplies.**		
Detroit Edison	No	What is the basis for the three month interval for verifying breaker trip coil continuity? Will the investment required to facilitate this really result in the presumed expected increased reliability?
Response: The SDT thanks you for your comments and has removed the requirement.		
Manitoba Hydro	No	1. When we have redundant digital relay system that would fall under Level 1c category with a 12 year maintenance cycle, but the Protection System Control Circuitry is non-monitored so it falls under Level 1a, with a 6 year maintenance cycle. We will have to complete relay maintenance and trip testing every 12 years and trip testing only every 6 years, therefore we must complete trip testing twice as often as we are doing the maintenance. We feel that relay maintenance and trip testing should be completed at the same frequency. 2. The Protection System Control Circuitry (Breaker Trip Coil) checks every three months is too excessive. These circuits are checked during trip testing of the Protection scheme, at the 6 or 12 year interval. 3. If we have a redundant digital relay system, using a IEC61850 communication from the relay to a common breaker aux trip relay, what level does this system fall under?
Response: The SDT thanks you for your comments. **1. Whether relay systems are redundant are immaterial in determining appropriate maintenance intervals. The SDT believes that the intervals established in the standard are appropriate. The Tables have been revised extensively; the SDT invites you to review the revised Tables to determine how they affect your system.** **2. The requirement to which you refer has been removed from the Table.** **3. Whether relay systems are redundant are immaterial in determining appropriate maintenance intervals. You will need to evaluate all components to determine applicable maintenance activities; the digital relays MAY fall under Table 1c, but other components may fall under any of the Tables.**		
Xcel Energy	No	Within the tables, several components related to UFLS/UVLS systems have an interval of “when the associated UVLS or UFLS system is maintained.” Yet, there is no maximum interval established for a UVLS or UFLS system. We feel this item should be clarified. If the intent of the SDT is to tie the testing to when the UFLS/UVLS relays are maintained, so that all components are tested at the same time, then this should be made clear. One possible resolution would be to change the interval to read: “when the associated UVLS/UFLS relays are maintained”.

Organization	Yes or No	Question 3 Comment
Response: The SDT thanks you for your comments. The interval for the UVLS or UFLS system relays is established within Table 1a, Table 1b, and Table 1c. The intent of the SDT is to facilitate concurrent maintenance of all components associated with these systems at a common location.		
AECI	No	1. Comments: Table 1a 3 months for protection system coil check out seems extreme. Should be at least 1 year. 2. Same as comment 4 for the communication checkout on page 9.
Response: The SDT thanks you for your comments. **1. The SDT has modified the standard to remove the requirement to which you refer.** **2. See response to your question 4 comment on communication checkout.**		
Puget Sound Energy	Yes	PSE appreciates the explanation of calendar provided in the supplementary reference on page 14. Further clarity would be gained by an example that is not at the end of a calendar year. For example if a relay was maintained June 15, 2008, would it be due for maintenance again no later than June 30, 2014 or December 31, 2014.
Response: The SDT thanks you for your comments. For your example, the maintenance would have to be completed within 2014.		
Bonneville Power Administration	Yes	
ENOSERV	Yes	
Georgia System Operations Corporation	Yes	
Lower Colorado River Authority	Yes	
Oncor Electric Delivery	Yes	
Ontario Power Generation	Yes	
Operations and Maintenance	Yes	

Organization	Yes or No	Question 3 Comment
Otter Tail Power	Yes	
Saskatchewan Power Corporation	Yes	
TVA	Yes	
Western Area Power Administration	Yes	

4. Within Tables 1b and 1c, the draft standard establishes parameters for condition-based maintenance, where the condition of the devices is known by means of monitoring within the substation or plant and the condition is reported. Do you agree with this approach? If not, please explain in the comment area.

Summary Consideration: Most respondents agreed with the general approach regarding condition-based maintenance, many of them with questions and/or comments. Many of the comments requested clarification of any of a variety of specific provisions within Tables 1b and 1c, and revisions were made to the Tables to present the information more clearly. The activities for control circuits and for dc supply were considerably re-worked.

Organization	Yes or No	Question 4 Comment
Green Country Energy LLC		No Preference at this time.
Exelon Generation Company, LLC	No	1. Please provide more clarification on what constitutes "partially monitoring." For example, is a computer auxiliary contact alarm count as partial monitoring? Would a common alarm between relays meet the definition of partial monitoring? 2. All maintenance activities should include a "grace" period to allow for changes to a nuclear generator's refueling schedule and emergent conditions that would prevent the safe isolation of equipment and/or testing of function. "Grace" periods align with currently implemented nuclear generator's maintenance and testing programs. 3. Table 1b Station dc supply (that has as a component valve regulated lead-acid batteries) should provide an additional optional activity for "Total replacement of battery at an interval of four (4) years. 4. There seems to be a disconnect between the monitoring attribute and maintenance activity. For example, the monitoring attribute "Monitoring and alarming of the station dc supply voltage/detection and alarming of dc grounds" has the maintenance activity "verify that the station battery can perform as designed by conducting a performance or service capacity test of the entire batter bank. (3 calendar years) or " Verify that the station battery can perform as designed by evaluating the measure cell/unit internal ohmic values to station battery baseline (3 months)." The maintenance activity does not support the monitoring attribute. 5. If an entity has implemented Table 1b and/ or Table 1c, is there an acceptable length of time that the monitoring equipment can be out of service without falling back to Table 1a requirements?
Response: The SDT thanks you for your comments.		

Organization	Yes or No	Question 4 Comment
1. A common alarm would meet the definition of partially monitored. See FAQ V-3-A (page 38). **2. The SDT considered this issue when developing the intervals, and realizes that some entities may need to perform certain maintenance activities more frequently to assure that the activities are performed within the required intervals. Specifically, for generation facilities, there would seem to be numerous opportunities within the 6-year or longer intervals to perform the required maintenance during a scheduled plant outage, and maintenance with shorter intervals can be characterized as non-intrusive maintenance, more of an inspection than anything else; the SDT believes that this maintenance can be done on-line. The SDT is concerned that a "grace period", if permitted, would be used to establish a de-facto longer interval, and that the established intervals would thus not be measurable. Additionally, FERC Order 693 directed that NERC establish maximum maintenance intervals, and allowing for a "grace period" would not conform to this directive. Please refer to Section 8 of the Supplementary Reference Document (page 9) for a discussion on this issue.** **3. The SDT believes that total replacement of a VRLA battery set at an interval of four (4) years in lieu of not conducting a capacity test at the maximum maintenance interval of 3 calendar years, or evaluating the measured cell/unit internal ohmic values to the station battery's baseline at the maximum maintenance interval of 3 months would put the owner of the battery set out of compliance with the standard. The SDT believes the three calendar year Maximum Maintenance Interval for conducting a capacity test (listed in Table 1) cannot be exceeded. If an owner does a total replacement of the battery within a three calendar year interval from initial installation of a VRLA battery set, the owner will be compliant with the standard. Extending the time that a VRLA goes beyond the Maximum Maintenance Interval in Table 1 without verification that it can perform as designed is not adequate to insure that the station battery will perform reliably.** **4. The monitoring attributes describe "what you know of the component via the monitoring", while the activities describe what must be done relative to the "things you don't know". Therefore, it's expected that the attributes and activities will be dissimilar.** **5. The equipment used to monitor the alarms must be returned to service within the shortest Table 1a interval of the monitored components. For example, if monitoring is used to defer the 3-month Table 1a maintenance activity related to Protection System Control Circuitry, the monitoring function must be returned to service within 3 months. This has been added to Table 1b and Table 1c as a requirement.**		
American Transmission Company	No	1. ATC does not believe that there is a relay, on the market today, that has the ability to fully monitor itself as described in Table 1c. We believe that Table 1c should be deleted. (Table 1b could cover any device that has the ability to fully monitor if such a device is developed in the future.) ATC does not believe that NERC Reliability Standards should be used as an enticement for manufacturers to develop specific devices. 2. Under the "General Description" in Table 1c, there is a reporting requirement identifying a 1 hour window. ("must be reported within 1 hour or less of the maintenance-correctable issue occurring, to the location where action can be taken.") ATC believes that the team needs to define if this action is a phone call or physically verify the maintenance correctable issue which is occurring.
Response: The SDT thanks you for your comments. **1. Your observation may be accurate at the present time and is not limited to protective relays. The standard was developed with future improvements**		

Organization	Yes or No	Question 4 Comment
in technology and practices in mind. **2. This reporting requirement is intended to be by whatever means is available, to a location where resolution of the maintenance-correctable issue can be initiated.**		
Duke Energy	No	For utilities like us with large numbers of relays it's too complicated, which drives us back to Table 1a.
Response: The SDT thanks you for your comments. The standard was written with enough flexibility to allow entities to make the best business decision for their situation. Some entities may decide that Table 1a is the best fit for their situation.		
AEP	No	How would the failure of a SCADA system affect the ability to take advantage of monitoring?
Response: The SDT thanks you for your comments. **It doesn't, as long as the SCADA system is returned to service within the shortest Table 1a interval of the monitored components. For example, if monitoring is used to defer the 3 month Table 1a maintenance activity related to Protection System Control Circuitry, the monitoring function must be returned to service within 3 months. This has been added to Table 1b and Table 1c as a required attribute for the associated type of protection system component.**		
Illinois Municipal Electric Agency	No	IMEA supports comments submitted by Florida Municipal Power Agency regarding use of the word "every" in Table 1c.
Response: The SDT thanks you for your comments. See response to FMPA.		
Pepco Holdings Inc.	No	Monitoring and alarming of the station dc supply and detection and alarming of dc grounds are required to qualify for Level 2 monitoring of battery / dc systems. While the presence of dc ground may affect protection and control operations, they do not affect any of the systems for which dc ground alarming is listed as a monitoring criteria. Recommend removing this criterion from the battery & dc system monitoring criteria and adding it as a maintenance activity, with frequency of testing based on presence of detection / alarming.
Response: The SDT thanks you for your comments. The dc ground alarm may identify a maintenance correctable issue, which must be resolved according to Requirement R4. The SDT believes that dc ground detection is usually a part of battery maintenance; this is sometimes even included in the battery charger.		
Electric Market Policy	No	Recommend that all Level 2 three-month maintenance intervals be changed to a quarterly based system where only 4 inspections are required per year. Given a 3 month maximum interval, activities would need to be scheduled every 2 months, which would result in six inspections per year. Our experience of four

Organization	Yes or No	Question 4 Comment
		inspections per year has proven to be successful.
Response: Thank you for your comments .SDT believes that the "3 Calendar Month" interval is necessary to maintain the periodicity of the maintenance activities. "Once per calendar quarter" or "four times per year" would allow up to a 6-month practical interval, which would not maintain this periodicity. This DOES permit entities to use four inspections per year provided that they carefully manage their maintenance activities.		
SERC (PCS)	No	Recommend that all Level 2 three-month maintenance intervals be changed from 3 months to quarterly. Given a 3 month maximum interval an entity would need to schedule these tasks every 2 months. This would result in six inspections per year. In the experience of many of our utilities, four inspections per year have proven to be successful.
Response: The SDT thanks you for your comments. SDT believes that the "3 Calendar Month" interval is necessary to maintain the periodicity of the maintenance activities. "Once per calendar quarter" or "four times per year" would allow up to a 6-month practical interval, which would not maintain this periodicity. This DOES permit entities to use four inspections per year provided that they carefully manage their maintenance activities.		
Wolverine Power Supply Cooperative, Inc.	No	See question 2 response
Response: The SDT thanks you for your comments. See Question 2 response.		
SCE&G	No	Several maximum maintenance intervals are 3 months. Since this is an absolute maximum period, entities would need to schedule on a 2 month basis to assure the 3 month maximum is met, i.e., 6 times per year. We recommend that 3 month periods be increased to 4 months which allows scheduling every 3 months. An alternate method of achieving the same result is to state periodic requirements of quarterly or 4 times per year.
Response: The SDT thanks you for your comments. SDT believes that the "3 Calendar Month" interval is necessary to maintain the periodicity of the maintenance activities. "Once per calendar quarter" or "four times per year" would allow up to a 6-month practical interval, which would not maintain this periodicity. This DOES permit entities to use four inspections per year provided that they carefully manage their maintenance activities.		
Detroit Edison	No	Table 1b indicates that this (level 2) includes all elements of level 1 monitoring. However, level 1 is constantly referred to as unmonitored in other places.
Response: The SDT thanks you for your comments and modified Table 1b to address your comment by removing this reference from the header of the table.		

Organization	Yes or No	Question 4 Comment
Southern Company	No	1. Table 1b should allow self-monitored circuits that are not alarmed but are monitored and logged by personnel daily or more often. Many plants and substations have personnel that do in person checks of unmanned control rooms. This is the equivalent of "Protection System components whose alarms are automatically provided daily (or more frequently) to a location where action can be taken for alarmed failures." For example, dc system ground potential lights and dc system volt meters exist on most control room bench boards or exist in the digital control systems at generating stations. These devices are monitored by operators in manned control rooms. 2. On Table 1b, Protection System Control Circuitry (Trip Coils and Auxiliary Relays), the monitoring component calls for "Monitoring and alarming of continuity of trip coil(s)." Clarify that "trip coil(s)" excludes Breaker Failure Initiate relay coil(s). 3. On Table 1b, Protection System Control Circuitry (Trip Coils and Auxiliary Relays) Experience has shown that electrically operating fully monitored breaker trip coils, auxiliary relays, and lockout relays every 6 years is not warranted. This testing introduces risk from a human error perspective as well as from additional switching and clearances required. We recommend eliminating this maintenance requirement from Table 1b. 4. On Table 1c, Protection System Control Circuitry (Trip Coils and Auxiliary Relays) Experience has shown that electrically operating fully monitored breaker trip coils, auxiliary relays, and lockout relays every 6 years is not warranted. This testing introduces risk from a human error perspective as well as from additional switching and clearances required. We recommend changing this maximum maintenance interval to 12 years. 5. Component monitoring attributes need to be defined for all components in table 1b and 1c. For example, the attributes for voltage and current sensing devices could be that "Voltage and current input circuits are monitored and alarmed". 6. Based on past performance, the requirement to electrically operate trip coils, auxiliary relays, and lockout relays every 6 years in Table 1b is not warranted. We recommend complete functional testing including electrical operation of breaker trip coils, auxiliary trip relays, and lockout relays every 12 years in tables 1b and 1c.
Response: Thank you for your response. **1. The SDT modified the Table 1b header to address your comment by adding "condition or" to the General Description. See FAQ V-1-D (page 30).** **2. The SDT has modified the standard to clarify that this monitoring addresses monitoring of the trip circuit(s), rather than the trip coil(s).** **3. The SDT believes that it is important that these mechanical devices be periodically (physically) exercised to assure that they will operate properly.**		

Organization	Yes or No	Question 4 Comment
4. The SDT believes that the intervals in the table are appropriate. The standard allows entities to utilize Performance-Based maintenance if they have appropriate documented experience. **5. The tables have been modified to address this issue, except where no relevant monitoring attributes exist.** **6. The SDT believes that the intervals in the table are appropriate. The standard allows entities to utilize Performance-Based maintenance if they have appropriate documented experience.**		
US Bureau of Reclamation	No	The condition based monitoring only provides for a very narrow process and excludes sound judgment in determining maintenance intervals. As long as the registered entity establishes parameters by which variation in the prescribed maintenance intervals are determined, justified variation should be allowed.
Response: The SDT thanks you for your comments. The SDT, in accordance with FERC Order 693, has prescribed maximum allowable maintenance intervals for unmonitored Protection System components (Table 1a), partially-monitored Protection System components (Table 1b), and fully-monitored Protection System components (Table 1c). For further discussion pertaining to intervals see Supplementary Reference Document, Section 8 (page 9). To allow an entity to use their discretion to extend these intervals, absent adoption of the criteria established for performance-based maintenance, would be contrary to the direction established by FERC. For further discussion pertaining to performance based maintenance see Supplementary Reference Section 9.		
Austin Energy	Yes	
Bonneville Power Administration	Yes	
CPS Energy	Yes	
Dynegy	Yes	
E.ON U.S.	Yes	
ENOSERV	Yes	
Entergy Services, Inc	Yes	
FirstEnergy	Yes	
Georgia System Operations	Yes	

Organization	Yes or No	Question 4 Comment
Corporation		
Indianapolis Power & Light Co.	Yes	
Manitoba Hydro	Yes	
Nebraska Public Power District	Yes	
NextEra Energy Resources	Yes	
Northeast Power Coordinating Council	Yes	
Oncor Electric Delivery	Yes	
Ontario Power Generation	Yes	
Operations and Maintenance	Yes	
Otter Tail Power	Yes	
PacifiCorp	Yes	
Platte River Power Authority Maintenance Group	Yes	
RRI Energy	Yes	
Saskatchewan Power Corporation	Yes	
Transmission Owner	Yes	
TVA	Yes	

Organization	Yes or No	Question 4 Comment
Western Area Power Administration	Yes	
Wisconsin Electric	Yes	
Xcel Energy	Yes	
MRO NERC Standards Review Subcommittee	Yes	A. The MRO NSRS agrees with this approach; however, I think most entities will not see the advantage of condition-based maintenance until they can resolve any gaps in data retention. If an entity was retaining a set of maintenance records but failed to include all the needed information as specified in this standard so they would need to adjust their maintenance procedure to collect all information and then they would need to wait for the entire retention period until they could start using the extended maintenance interval. If an entity had a collateral set of records which verified the information that lacked in the original maintenance record then could the entity start using the extended maintenance interval? For example, an entity has records showing that they have maintained a voltage or current transformer within the prescribed maintenance interval listed in level 1 monitoring (which is a maximum 12 year maintenance interval). Could this same entity go to level 3 monitoring (which is a continuous maintenance interval) immediately if it can query their SCADA and produce detailed records indicating the accuracy of the PT or CT for the maintenance records already retained? B. For lockout relays, if commissioning tests are done diligently, the trip DC availability is continuously monitored and the trip coil itself is continuously monitored, is it necessary to operate these relays for functional testing? For breaker failure lockout relays, re-verifying the operation of the coil and all the contacts could mean taking multiple breakers and line terminals out of service at the same time. Functional trip tests could cause unintentional tripping of equipment, cause equipment damage and interruption of service to customers. It's hard to see how the reliability of the BES is significantly improved by doing this test. The MRO NSRS feels the risk of adverse impact could be greatly reduced by a longer interval such as 12 years. C. In table 1c, the word “continuous or continuously monitored” is used. Please clarify the “within 1 hour” time frame takes into account that there may be a communication outage (failover) that will prevent an entity to “continuously” monitor a device.
Response: The SDT thanks you for your comments. **A. It appears to the SDT that this comment actually is addressing performance-based maintenance, rather than condition-based maintenance. If the entity has all the necessary records to support immediate moving to a specific level of maintenance, or to performance-based maintenance, there should be no barrier to such an action.** **B. The SDT is not aware of any monitoring system that can verify that these mechanical devices can indeed physically operate properly; thus the**		

Organization	Yes or No	Question 4 Comment
interval is established at 6 years. (See Supplementary Reference Document Section 15.4, page 23.) **C. "Continuous monitoring" is an attribute of the Protection System component to produce an indication of state or status; the 1-hour constraint refers to the communication method used to monitor the indications. The equipment used to monitor the alarms must be returned to service within the shortest Table 1a interval of the monitored components. For example, if monitoring is used to defer the 3 month Table 1a maintenance activity related to Protection System Control Circuitry, the monitoring function must be returned to service within 3 months. This has been added to Table 1b and Table 1c as a required attribute for the associated type of protection system component.**		
City Utilities of Springfield, MO	Yes	CU agrees with the approach, but, may not agree with the exact wording in the tables. For instance, the use of the word "every" in table 1c in "Protection System components in which every function required for correct operation of that component is continuously monitored and verified" may be overstating the level of monitoring that would realistically enable a Protection System to use table 1c.
Response: The SDT thanks you for your comments. Table 1c establishes that, with the monitoring attributes specified, periodic maintenance may not be necessary at all. In order to facilitate this, the constraint, "every function required for correct operation of that component is continuously monitored and verified" must be met. If a component cannot meet this constraint, it must be addressed within either Table 1b or Table 1a, as appropriate.		
Florida Municipal Power Agency, and its Member Cities	Yes	FMPA agrees with the approach, but, may not agree with the exact wording in the tables. For instance, the use of the word "every" in table 1c in "Protection System components in which every function required for correct operation of that component is continuously monitored and verified" may be overstating the level of monitoring that would realistically enable a Protection System to use table 1c.
Response: The SDT thanks you for your comments. Table 1c establishes that, with the monitoring attributes specified, periodic maintenance may not be necessary at all. In order to facilitate this, the constraint, "every function required for correct operation of that component is continuously monitored and verified" must be met. If a component cannot meet this constraint, it must be addressed within either Table 1b or Table 1a, as appropriate.		
JEA	Yes	Is it possible that for coil monitored equipment, such as LOR coils, that they were left out, of this Table allowing for a longer maintenance interval. Certainly LOR continuous coil monitoring with alarming to a 24 hour 7 day a week manned location, with emergency dispatch, would allow for a longer maintenance interval for continuously monitored LORs. Suggestion here might be alignment with continuously self-tested, monitored and alarmed microprocessor relays at 12 years.
Response: The SDT thanks you for your comments. Monitoring of the coil of these devices does not assure that the device will mechanically operate properly; thus the interval for verification of proper physical operation is established at 6 years similarly to Table 1a and Table 1b. (See Supplementary		

Organization	Yes or No	Question 4 Comment
Reference Document, Section 15.4, page 23.)		
ITC Holdings	Yes	We agree with the approach. We have several issues with the details of Maintenance Issues, Interval and Monitoring Attributes. See previous comments for Questions 2 and 3.
Response: The SDT thanks you for your comments. See response to your comments in Questions 2 and 3.		
Ameren	Yes	We agree with the condition-based approach. Our comments in 3 above apply to Tables 1b and 1c as well. We note that Table 1b Station dc supply intervals are the same as Table 1a. Why doesn't the monitoring cause 1b intervals to be longer than 1a?
Response: The SDT thanks you for your comments. The standard (specifically Table 1b) has been modified in consideration of your comment.		
Lower Colorado River Authority	Yes	We commend the drafting team for recognizing the advantages of using monitored systems and a condition-based approach. This approach recognizes the benefits of using newer technologies and will give utilities added incentive to update their relay systems.
Response: The SDT thanks you for your support.		
Puget Sound Energy	Yes	

5. Within PRC-005 Attachment A, the draft standard establishes parameters for performance-based maintenance, where the historical performance of the devices is known and analyzed to support adjustment of the maximum intervals. Do you agree with this approach? If not, please explain in the comment area.

Summary Consideration: Many of the respondents agreed with this approach, but comments indicated concern about perceived administrative difficulties in establishing performance-based maintenance programs. The SDT responded to these concerns by noting that associated administrative program development is one of the considerations that an entity must address when contemplating use of such a program.

Organization	Yes or No	Question 5 Comment
Green Country Energy LLC		N/A does not apply
MRO NERC Standards Review Subcommittee	No	A. The MRO NSRS is concerned that this approach could lead to non-compliance if the company follows this process and a Compliance Auditor disagrees with the method that was used. An applicable entity should be protected if they follow the standard appropriately. There should be some assurance of a grace period for mitigation if this selected approach was not accepted. B. Please provide the basis for having at least 60, then taking 30 (50%) for testing/maintenance. This may give an unfair advantage to larger companies rather than being fair across the board. This places an undue burden on smaller companies by having to team up with other asset owners.
Response: The SDT thanks you for your comments. **A. See Attachment A of standard. The entity has three years to get performance to an acceptable level (under 4% countable events) or get on the appropriate time-based interval.** **B. The requirement for having 60 and testing 30 is based on having a statistically significant number of devices. Please see Section 9.1 (page 16) of the Supplementary Reference Document for a discussion of the statistical basis. The standard allows smaller entities to share data in order to support their ability to utilize performance-based maintenance.**		
CenterPoint Energy	No	a. CenterPoint Energy lauds the SDT for recognizing that strict imposition of the maximum interval approach creates problems which the SDT attempts to correct by allowing performance-based adjustments. CenterPoint Energy believes the majority of industry commenters will agree with CenterPoint Energy's assessment that the maximum interval approach is problematic and should be dropped from the proposal. However, if the majority of industry commenters agree with the SDT's approach, then a performance-based option to correct the problems introduced by the maximum interval requirements should remain.

Organization	Yes or No	Question 5 Comment
		b. CenterPoint Energy answered "No" to question 5 because CenterPoint Energy believes the arduous path of creating a new set of problems with a rigid approach (maximum interval requirements) and then introducing a complex set of auditable requirements to provide an option (performance-based maintenance) to mitigate the harm of the rigid approach is ill-advised and fraught with pitfalls. Stated otherwise, using performance-based adjustments to correct inappropriate maximum intervals would not be necessary if the inappropriate maximum intervals were not imposed. CenterPoint Energy believes a better approach is to avoid introducing the new set of problems that then have to be mitigated by not imposing problematic maximum intervals. c. Followed to its logical conclusion, using performance-based adjustments to correct inappropriate maximum intervals is a contorted way of arriving at the philosophy embodied in the current set of standards in which entities determine the maximum intervals appropriate for their circumstances and performance. CenterPoint Energy's concern is that the contortions needed to arrive at the same point, in addition to being unnecessary, will be difficult for most entities to navigate. An entity making a good faith effort to comply with the performance-based adjustments will have to navigate through the complexities and nuances of the approach, as illustrated by the extensive set of documents the SDT has provided in an attempt to explain all the requirements and nuances. As an entity attempts to manage this hurdle, the entity will likely have to deal with the reality that the granularity of performance metrics do not exist in most cases to justify to an auditor the rationale for the adjustments to the inappropriate maximum intervals. For example, CenterPoint Energy has asserted that it has had good battery performance using existing practices. However, the assertion is anecdotal. CenterPoint Energy cannot recall any instances where it had a relay misoperation due to battery failure in over twenty five years. CenterPoint Energy does not attempt to keep performance metrics on events that historically occur less than four times a century and CenterPoint Energy believes most entities will be in the same situation. d. If an entity is somehow able to overcome these hurdles, the entity will almost certainly encounter skepticism for what will be viewed as an exception to the default requirement embodied in the standard. Even if an entity can overcome likely skepticism in an audit, the entity will be in a severely disadvantaged situation if a protection system component for which the maintenance interval has been adjusted, based on the entity's good faith effort and reasoned judgment, nevertheless is a contributing factor in a major reliability event investigation, regardless of whether the maintenance interval adjustment contributed to the failure. No matter what maintenance intervals are used, protection system components could fail. If the maintenance interval has been adjusted and if failure occurs, it will likely be unknown whether the interval adjustment was in fact a contributing factor or whether the failure would have occurred anyway. e. Faced with this dilemma, in addition to all the other hurdles to overcome in attempting to adjust an inappropriate maximum interval, the reality is that most entities will accept the inappropriate maximum interval and over-maintain their protection system components, and introduce a new set of reliability risks from such over-maintenance. For these reasons, CenterPoint Energy advises against creating a new set of problem by imposing rigid maximum intervals and then attempting to correct the problems through a performance-based

Organization	Yes or No	Question 5 Comment
		mechanism that in actual practice would likely be illusory.
Response: The SDT thanks you for your comments. **a. FERC order 693 requires that NERC establish maximum time intervals. The criteria for performance-based maintenance are established for entities that wish to establish other intervals based on concise stated criteria.** **b. FERC order 693 requires that NERC establish maximum time intervals. The SDT believes that the established intervals are appropriate. The criteria for performance-based maintenance are established for entities that wish to establish other intervals based on concise stated criteria.** **c. Entities are not required to use PBM, but instead may elect to simply use the intervals established in Table 1a, Table 1b, and/or Table 1c. However, if an entity keeps the necessary metrics to conform to Attachment 1, it may find opportunities within PBM; however, the SDT has established that maintenance of station batteries must be performed within a time-based maintenance program.** **d. The standard established maximum intervals, minimum maintenance activities, and, for PBM, minimum requirements (and performance). If an entity is concerned about whether these intervals will yield acceptable performance, it may perform more maintenance, more frequently, than established within the standard.** **e. FERC order 693 requires that NERC establish maximum time intervals. The criteria for performance-based maintenance are established for entities that wish to establish other intervals based on concise stated criteria, but entities are not required to use PBM.**		
ITC Holdings	No	Appendix A fixes a 4% level of "countable events". Is this number the industry average for countable events? Has the industry average actually been determined? The basis for the 4% requirement noted in Paragraph 5 of Appendix A should be included in the reference document. Also a sample calculation for adjusting the interval is needed to clarify the requirement.
Response: The SDT thanks you for your comments. We used failure and calibration data from some of the utilities on the drafting team to determine the 4% level; this value is also determined such that a single countable event on the 30 unit minimum test sample established via the statistical analysis described in Section 9 of the Supplementary Reference Document (page 15) does not exceed the threshold. See FAQ IV-3-D thru IV-3-F (pages 25-26) which discusses types of Misoperations and correcting segment performance.		
American Transmission Company	No	ATC agrees with this approach but is concerned that Attachment A does not contain enough language to support an entity that implements this practice. This attachment needs to clearly state that following your performance-based maintenance practices satisfies an entity's compliance obligations. Entities should not be subject to non-compliance over disagreements with their performance-based maintenance methodology.
Response: The SDT thanks you for your comments. The SDT believes Attachment A does contain enough language to support PBM, and this language is further supported by technical guidance from Section 9 of the Supplementary Reference Document (page 15). Additionally, R3 of the standard specifically provides that an entity that follows the requirements detailed in Attachment A is indeed in compliance. The SDT will consider any		

Organization	Yes or No	Question 5 Comment
suggested improvements.		
E.ON U.S.	No	E.ON U.S. recommends keeping with time-based intervals (and the improvement thereof) and staying clear of condition-based performance for the generating stations. But that is not meant to preclude other companies from doing condition-based, if they so prefer.
Response: The SDT thanks you for your comments.		
Indianapolis Power & Light Co.	No	Establishing historical performance and keeping the documentation up to date makes this almost useless
Response: The SDT thanks you for your comments. Entities are not required to use PBM.		
Florida Municipal Power Agency, and its Member Cities	No	FMPA believes that the documented process outlined in Attachment A; "Criteria for Performance Based Protection System Maintenance Program" is biased towards larger entities. The requirement that the minimum population of 60 individual components of a particular segment is required to make a component applicable to this program automatically eliminates most of the small or medium sized entities. Further the need to first test a minimum of 30 individual components in any segment reinforces the same size limitation. FMPA suggests that the Performance-Based Protection System Maintenance Program allow for regional shared databases applicable towards meeting the establishment and testing criteria of similar individual components. This practice will allow for the inclusion of entities of all sizes. This will also provide a greater format for the discussion of lessons learned and improvements to the testing database on a regional basis.
Response: The SDT thanks you for your comments. The requirement for having 60 and testing 30 is based on having a statistically significant number of devices. Please see Section 9.1 of the Supplementary Reference Document (page 16) for a discussion of the statistical basis. The standard allows smaller entities to share data in order to support their ability to utilize performance-based maintenance. See footnote 4 of Attachment A.		
Duke Energy	No	For utilities like us with large numbers of relays it's too complicated, which drives us back to Table 1a.
Response: The SDT thanks you for your comments. Entities are not required to use PBM.		
Illinois Municipal Electric Agency	No	IMEA supports comments submitted by Florida Municipal Power Agency that the process outlined in Attachment A is biased towards larger utilities.
Response: The SDT thanks you for your comments. The requirement for having 60 and testing 30 is based on having a statistically significant number of devices. Please see Section 9.1 of the Supplementary Reference Document (page 16) for a discussion of the statistical basis. The standard allows smaller entities to share data in order to support their ability to utilize performance-based maintenance. See footnote 4 of Attachment A.		

Organization	Yes or No	Question 5 Comment
City Utilities of Springfield, MO	No	It appears that Attachment A was written for large utilities. Some allocation needs to be made for utilities with smaller numbers of components.
Response: The SDT thanks you for your comments. The requirement for having 60 and testing 30 is based on having a statistically significant number of devices. Please see Section 9.1 of the Supplementary Reference Document (page 16) for a discussion of the statistical basis. The standard allows smaller entities to share data in order to support their ability to utilize performance-based maintenance. See footnote 4 of Attachment A.		
Saskatchewan Power Corporation	No	Saskatchewan agrees with the approach, but requires clarification in the definition of segment. The definition uses a population of 60 or more individual components but in the establishment of a PSMP, it only asks for a population of 30 or more. Which number will be used to define the segment?
Response: The SDT thanks you for your comments. The requirement is that a minimum population of 60 units be present, and that at least 30 units be tested on time-based maintenance (Table 1a) prior to moving to PBM. A minimum of 30 units tested is also used for ongoing analysis of the PBM performance, as specified in Attachment A. Please see Section 9.1 of the Supplementary Reference Document (page 16) for a discussion of the statistical basis.		
Austin Energy	No	See item # 10 Comments
Response: See item #10 response.		
Wolverine Power Supply Cooperative, Inc.	No	See question 2 response
Response: See question 2 response.		
Northeast Power Coordinating Council	No	The concept is acceptable, but the requirements to follow in Appendix A seem to be a deterrent from attempting to use this process. Is the term “common factors” meant to take into account variables at locations that can affect the components” performance (lightning, water damage, humidity, heat, cold)”
Response: The SDT thanks you for your comments. The SDT has attempted to make Attachment A as straight forward as possible. The term “common factors” does mean common variables that are expected to affect performance of the component such as lightning, water damage, humidity, heat and cold. The term also means common variables such as design, manufacture, performance history, etc that are expected to affect performance of the component.		
US Bureau of Reclamation	No	The parameters established can only be implemented with documentation that defined in the document but is

Organization	Yes or No	Question 5 Comment
		not readily available.
Response: Before utilizing a PBM for their Protection Systems, an entity must develop the supporting documentation via application of a time-based program (using the Table 1a intervals) in accordance with Attachment A.		
CPS Energy	Yes	
Detroit Edison	Yes	
Dynegy	Yes	
Electric Market Policy	Yes	
ENOSERV	Yes	
Entergy Services, Inc	Yes	
Georgia System Operations Corporation	Yes	
Lower Colorado River Authority	Yes	
Manitoba Hydro	Yes	
Nebraska Public Power District	Yes	
NextEra Energy Resources	Yes	
Oncor Electric Delivery	Yes	
Ontario Power Generation	Yes	
Operations and Maintenance	Yes	

Organization	Yes or No	Question 5 Comment
PacifiCorp	Yes	
Pepco Holdings Inc.	Yes	
Platte River Power Authority Maintenance Group	Yes	
RRI Energy	Yes	
SCE&G	Yes	
SERC (PCS)	Yes	
Southern Company	Yes	
Transmission Owner	Yes	
Western Area Power Administration	Yes	
Wisconsin Electric	Yes	
Xcel Energy	Yes	
FirstEnergy	Yes	Although we agree with the parameters of the proposed PBM, we have the following comments: 1. We question the inclusion of Misoperations in countable events as described in footnote 4. Since standard PRC-004 already requires analysis and mitigation of Protection System Misoperations through a Corrective Action Plan, entities should not be required to repeat this analysis and mitigation in PRC-005. We ask that the SDT clarify the requirements to allow a tie between PRC-005 and PRC-004 so as to assure work is not duplicated. 2. We are not receptive to using this methodology to develop intervals due to the detailed tracking and analysis that will be required to establish maximum intervals. The approach may suit other utilities and thus, we are not opposed to the methodology being contained within the standard.

Organization	Yes or No	Question 5 Comment
Response: The SDT thanks you for your comments. **1. PRC-004 should be used to handle reporting of the Misoperation and its corrective action. However, the misoperation should be included as a countable event required for PBM analysis. The documentation of correction of problems per PRC-004 should also suffice to address resolution of the corresponding maintenance-correctable issue for PRC-005.** **2. Entities are not required to use PBM.**		
JEA	Yes	Approach appears to be well explained. Only one are of concern and that would be delaying the advancement of replacement of EM relay systems with microprocessor, if the PBM population were to decrease below the 60, resulting in not meeting the sample minimum population criteria. Falling below this 60 population sample minimum, might result in an immediate compliance violation.
Response: The SDT thanks you for your comments. The standard is not meant to delay replacement of relays. An entity should do an annual analysis of it segment size and countable events. As the segment population approaches 60, the entity should transition back to a time-based program per Table 1a, Table 1b, or 1c, as appropriate, and assure that the remaining components are maintained accordingly.		
Exelon Generation Company, LLC	Yes	None
TVA	Yes	Should allow inclusion of dc systems as well.
Response: The SDT thanks you for your comments. A Station DC supply that does not include batteries may be fit into a PBM. See Section 15 of the Supplementary Reference Document (page 21) (and FAQ IV-3-G, page 26) for a discussion of why station batteries cannot be included in a PBM.		
Ameren	Yes	While we agree with the approach, batteries should be allowed, not excluded.
Response: The SDT thanks you for your comments. See Section 15 of the Supplementary Reference Document (page 21) (and FAQ IV-3-G, page 26) for a discussion of why station batteries cannot be included in a PBM.		
Puget Sound Energy	Yes	

6. The SDT has provided a "Supplementary Reference Document" to provide supporting discussion for the Requirements within the standard. Do you have any comments on the Supplementary Reference Document? Please explain in the comment area.

Summary Consideration: In general, respondents expressed appreciation for the additional technical discussion included within this document. The SDT responded to many comments by explaining the relationship between the Standard and the Reference Document. Several respondents suggested that elements of the extensive discussion be contained within the standard itself, which is contrary to the guidance within the paradigm for NERC Standards.

Organization	Yes or No	Question 6 Comment
Bonneville Power Administration		Will this document be a part of the standard? Are its explanations the official interpretation of the standard?
Response: The FAQ and the Supplementary Reference Document are provided as references to present detailed discussions about determination of maintenance intervals and other useful information regarding establishment of a maintenance program, and do not have statutory effect. The SDT believes that these documents provide potentially useful information to the entity in developing and sustaining an effective PRC-005 program, and hopes that these documents will be useful to the entity in establishing support of their program when it is reviewed by the Compliance Enforcement Authority. It is the drafting team's intent that these documents be posted with the standard when approved similarly to the CIP FAQ and the PRC-023 reference document. In order that these documents are initially posted with PRC-005-2 when approved, they must undergo industry comment and review, and the Standards Committee must be convinced through that process that the documents align with the standard and are relevant to the standard. With future revisions to PRC-005, the FAQ and Supplemental Reference Document will have to undergo SDT review and industry comment to remain posted with the standard, and the Standards Committee will have to remain convinced of their accuracy and relevance.		
American Transmission Company	No	
City Utilities of Springfield, MO	No	
Detroit Edison	No	
Electric Market Policy	No	
ENOSERV	No	

Organization	Yes or No	Question 6 Comment
Florida Municipal Power Agency, and its Member Cities	No	
Georgia System Operations Corporation	No	
Illinois Municipal Electric Agency	No	
Indianapolis Power & Light Co.	No	
JEA	No	
Manitoba Hydro	No	
Nebraska Public Power District	No	
NextEra Energy Resources	No	
Northeast Power Coordinating Council	No	
Operations and Maintenance	No	
Pepco Holdings Inc.	No	
RRI Energy	No	
SCE&G	No	
SERC (PCS)	No	
Transmission Owner	No	
TVA	No	

Organization	Yes or No	Question 6 Comment
Western Area Power Administration	No	
Wolverine Power Supply Cooperative, Inc.	No	
US Bureau of Reclamation	No	The document will require revisions. 1. Performance based maintenance is establishing a strategy to achieve a desired performance. The document limits strategy to statistical analysis of failure rates. 2. The document assumes a modern protection system with a high level of monitoring. Facilities which barely qualify would not have high end monitoring installed. 3. The document also refers to "exercising a circuit breaker through t relay tripping circuits using remote control capabilities via data communication." This repeated several times throughout the document as a means of increasing the TBM. This function, if indeed used, would require maintenance. This function is very dangerous and could introduce a cyber vulnerability.
Response: The SDT thanks you for your comments. **1. As you say, PBM is an option to achieve a desired performance. The result should be a documented acceptable level of performance, and statistical analysis of failure rates is required as a minimum method to achieve this level of performance.** **2. The standard addresses all generations of equipment with varying levels of monitoring capability, and establishes requirements which address the equipment with no monitoring capability, as well as facilitating effective use of monitoring capabilities of the equipment that DOES have those capabilities.** **3. Exercising a circuit breaker through the relay tripping circuits via a remote communication method is an available option to those entities that wish to use it to satisfy maintenance intervals established in the standard, not to increase them; this is presented as an example of how entities may be able to use remotely performed activities to minimize maintenance requiring station visits. If an entity is concerned about risks presented from remote maintenance activities, they are not required to use such methods. Issues relating to cyber security are outside the scope of this Standard.**		
Ontario Power Generation	No	A well prepared and useful document.
Response: The SDT thanks you for your support.		
MRO NERC Standards Review	No	N/A

Organization	Yes or No	Question 6 Comment
Subcommittee		
Exelon Generation Company, LLC	No	None
Entergy Services, Inc	No	1. Regarding Section 2.3, Applicability of New Protection System Maintenance Standards, there needs to be clarification and examples of applicable relaying associated with the language: and that are applied on, or are designed to provide protection for the BES. For example, is the application of reverse power schemes and directional overcurrent schemes considered applicable when considering the impact to the protection of the BES? 2. We agree with the application of the term "calendar" in the PRC-005-2 Protection System Maintenance Supplementary Reference document. There should be enough flexibility in interval assignments to allow for annual maintenance planning, scheduling and implementation.
Response: The SDT thanks you for your comments. **1. Please refer to Clause 4 (Applicability) of the standard itself, and to the FAQ document (FAQ III – 2 – A, page 20), for further information on this. It appears that this comment is focused on generation plants; Clause 4.2.5.1 of the draft standard states, "Protection system components that act to trip the generator either directly or via generator lockout or auxiliary tripping relays." This Applicability clause would have to be applied to the specific instance of concern.** **2. The SDT thanks you for your comments.**		
PacifiCorp	No	Very helpful.
Response: The SDT thanks you for your comments.		
Austin Energy	Yes	
Ameren	Yes	1) We disagree with the page 22 statement that batteries cannot be a unique population segment of a PBM. 2) What role does the Supplement play in Compliance Monitoring and Enforcement?
Response: The SDT thanks you for your comments. **1. Thank you for your comment concerning your disagreement with the standard Drafting Team that batteries cannot be a unique population segment of a PBM. In FAQ IV-3-G (page 26) and the Supplementary Reference Document (See Section 15.4, page 23), the Drafting team states why batteries are excluded from PBM. The Drafting Team still believes, that for the reasons stated in the FAQ, that batteries cannot be a unique population segment of a**		

Organization	Yes or No	Question 6 Comment
PBM. There was much debate on this topic in the standard drafting process. It is well known that like batteries will behave differently for even slight variations of outside influences such as temperature, station load, battery charger action, number of duty cycles and even time spent on inventory shelf before first charge. The manufacturers' literature all state that you must control outside influences to attain a level of satisfactory performance. To prove this level of satisfactory performance (and possibly to help detect poor performance from outside influences) you must conduct certain routine tests. Routine tests are included within the Standard's tables of maintenance activities. **2. The FAQ and the Supplementary Reference Document are provided as references to present detailed discussions about determination of maintenance intervals and other useful information regarding establishment of a maintenance program, and do not have statutory effect. The SDT believes that these documents provide potentially useful information to the entity in developing and sustaining an effective PRC-005 program, and hopes that these documents will be useful to the entity in establishing support of their program when it is reviewed by the Compliance Enforcement Authority. It is the drafting team's intent that these documents be posted with the standard when approved similarly to the CIP FAQ and the PRC-023 reference document. In order that these documents are initially posted with PRC-005-2 when approved, they must undergo industry comment and review, and the Standards Committee must be convinced through that process that the documents align with the standard and are relevant to the standard. With future revisions to PRC-005, the FAQ and Supplemental Reference Document will have to undergo SDT review and industry comment to remain posted with the standard, and the Standards Committee will have to remain convinced of their accuracy and relevance.**		
FirstEnergy	Yes	1. Sec. 2.3 (pg. 4) This section appears to be discussing the purpose of the standard and not the applicability. We suggest changing the title of Sec. 2.3 to "Purpose of New Protection System Maintenance Standard." Also, in Sec. 2.3 it states: "The applicability language has been changed from the original PRC-005: '... affecting the reliability of the Bulk Electric System (BES) ...' To the present language: '... and that are applied on, or are designed to provide protection for the BES.' However, the posted Draft 1 of PRC-005-2 still has the original Purpose statement. Is the SDT planning to revise the Purpose statement as discussed in Sec. 2.3 of the Ref. document? It appears that this statement is included in the applicability section 4.2.1 but believe it is more appropriate as a general purpose statement applying to the whole standard. 2. Sec. 2.4 (pg. 4) Remove the extra word "that" from the second sentence of this section. 3. In the Supplementary reference, section 15.4 Batteries and DC Supplies, third paragraph, the SDT indicates these tests are recommended in IEEE 450-2002 to ensure that there are no open circuits in the battery string. This is essentially a continuity check of the battery string. In the fourth paragraph, the SDT states that "..."continuity" was introduced into the standard to allow the owner to choose how to verify continuity of a battery set by various methods, and not to limit the owner to the two methods recommended in the IEEE standards." 4. The SDT in Table 1a, the Maintenance Activity "Verify continuity and cell integrity of the entire battery", and in Table 1b, the Maintenance Activity "Verify electrical continuity of the entire battery". Based on the information in the Supplementary reference, the owner has to choose a method to verify continuity and the measurement of specific gravity and cell temperatures could be the selected method, however it should not be a required maintenance activity as shown in Tables 1a and 1b.

Organization	Yes or No	Question 6 Comment
Response: The SDT thanks you for your comments. **1. This clause of the document DOES specifically discuss the Applicability clause of the Standard; PRC-005-2 Section 4.2.1 states "Protection Systems that are applied on, or are designed to provide protection for the BES."** **2. The Supplementary Reference Document has been changed in consideration of your comment – the extra "that" has been removed.** **3. The standard and FAQ (See FAQ II-5-D, page 13) have been modified in consideration of your comments concerning checking continuity using specific gravity.** **4. Table 1a and Table 1b of the draft standard have been modified to remove requirements relating to measurement of cell temperature and specific gravity.**		
CPS Energy	Yes	Adds to the confusion with the standard, FAQ, and Supplemental. The three documents at times describe things a little differently.
Response: The SDT thanks you for your comments and is aligning the associated documents with changes to the standard.		
AEP	Yes	Although helpful in understanding and clarifying intent, the requirements of a standard should be clearly written so that multiple, lengthy supporting documents are not needed. These supporting documents do not get recorded into the registry as part of the standard and may or may not be used by auditors during compliance audits which could lead to different interpretations.
Response: The SDT thanks you for your comments. The FAQ and Supplementary Reference Document are provided as references to present detailed discussions about determination of maintenance intervals and other useful information regarding establishment of a maintenance program, and do not have statutory effect. The SDT believes that these documents provide potentially useful information to the entity in developing and sustaining an effective PRC-005 program, and hopes that these documents will be useful to the entity in establishing support of their program when it is reviewed by the Compliance Enforcement Authority. It is the drafting team's intent that these documents be posted with the standard when approved similarly to the CIP FAQ and the PRC-023 reference document. In order that these documents are initially posted with PRC-005-2 when approved, they must undergo industry comment and review, and the Standards Committee must be convinced through that process that the documents align with the standard and are relevant to the standard. With future revisions to PRC-005, the FAQ and Supplemental Reference Document will have to undergo SDT review and industry comment to remain posted with the standard, and the Standards Committee will have to remain convinced of their accuracy and relevance.		
CenterPoint Energy	Yes	CenterPoint Energy believes the need for an extensive "Supplementary Reference Document", in addition to 13 pages of tables and an attachment in the standard itself, illustrates that the proposal is too prescriptive and complex for most entities to practically implement. CenterPoint Energy would prefer the SDT leave the existing requirements substantially intact or, if most industry commenters prefer the SDT's approach, that the SDT

Organization	Yes or No	Question 6 Comment
		attempt to simplify it.
Response: The SDT thanks you for your comments. The NERC Standard Development Procedure establishes that the standard prescribe requirements, but avoid "how to" or "why" discussions. The SDT, in accordance with FERC Order 693, has prescribed maximum allowable maintenance intervals for various Protection System Components, has provided opportunities for entities to use advanced technologies to perform physical maintenance less frequently, and to use analytical techniques to customize their intervals. At its simplest, an entity could implement a pure time-based program utilizing Table 1a, and much of the additional explanation in the Supplementary Reference Document would not be needed by that entity.		
Public Service Enterprise Group Companies	Yes	Figure 2 "typical generation system" shows a typical auxiliary medium voltage bus, suggest that a line of distinction (dotted line) be added to the figure that defines the element connected to the BES (station Aux Transformer - SAT) and equipment not associated with protection of the SAT be shown as not part of the BES-PSMP.
Response: The SDT thanks you for your comments. The figures are provided to help describe the components of the Protection System, and are not intended to fully describe the boundaries of the BES, the definition of which may vary by Region.		
Wisconsin Electric	Yes	How much authority or weight will this document have with Compliance staff? If potential violations of the standard requirements are alleged by Compliance staff, can this document be cited by an entity when the document provides clarifying information on the requirements?
Response: The SDT thanks you for your comments. This document is not part of the standard, but is intended to provide the rationale of the SDT, as well as guidance about how the various requirements might be met. The explanations are not an "official" interpretation of the standard, but may be useful to determine how to implement various facets of the standard.		
Green Country Energy LLC	Yes	Huge help to us!
Response: Thank you for your support.		
Platte River Power Authority Maintenance Group	Yes	1. It isn't clear in the Supplementary Reference Document why lock-out relays (86) are included as a component of Protection Systems that require a 6 year maximum interval. Historically we haven't experienced any failures with lock-out relays and feel the risk of causing a system reliability issue by removing it from service and restoring it far outweighs the benefits of testing it. What, if any evidence, i.e. equipment failure, does the standard drafting team use to mandate routine testing of 86 devices? Are we fixing something that isn't broke here? 2. The FERC order directed NERC to submit a modification to PRC-005-1 that includes a requirement that maintenance and testing of a protection system be carried out within a maximum allowable interval that is

Organization	Yes or No	Question 6 Comment
		appropriate to the type of the protection system and its impact on the reliability of the BPS. It would seem more appropriate to allow each entity to set their own maximum allowable interval based on studies and historical data of their specific protection system and impact on the reliability of the BPS opposed to a blanket approach that covers all systems regardless of their size or system configuration.
Response: The SDT thanks you for your comments. **1. There are events in the industry that point to a failure of an electro-mechanical 86 device failing, and these devices are essential to proper functioning of the Protection System. PBM principles can be utilized to extend maintenance intervals. (See Supplementary Reference Document, Section 9, page 15.)** **2. FERC Order 693 directed that NERC establish maximum maintenance intervals, which does not provide the latitude to continue to allow entities to set their own intervals. The SDT has, however, added the ability of an entity to follow PBM principles, as you describe, thus adjusting the time intervals between required hands-on maintenance activity to reflect an entity's experience.**		
Progress Energy	Yes	Progress Energy is concerned that separating this document from the standard may lead to issues down the road. If the desire is to consolidate and clarify existing standards, then the two documents should be merged. Otherwise the reference document may get lost from the standard, or might get changed without due process, or might not even be recognized by FERC.
Response: The SDT thanks you for your comments. The FAQ and Supplementary Reference Document are provided as references to present detailed discussions about determination of maintenance intervals and other useful information regarding establishment of a maintenance program, and do not have statutory effect. The SDT believes that these documents provide potentially useful information to the entity in developing and sustaining an effective PRC-005 program, and hopes that these documents will be useful to the entity in establishing support of their program when it is reviewed by the Compliance Enforcement Authority. It is the drafting team's intent that these documents be posted with the standard when approved similarly to the CIP FAQ and the PRC-023 reference document. In order that these documents are initially posted with PRC-005-2 when approved, they must undergo industry comment and review, and the Standards Committee must be convinced through that process that the documents align with the standard and are relevant to the standard. With future revisions to PRC-005, the FAQ and Supplemental Reference Document will have to undergo SDT review and industry comment to remain posted with the standard, and the Standards Committee will have to remain convinced of their accuracy and relevance.		
Southern Company	Yes	1.Section 15.3 DC Control Circuitry: Although we agree with the premise that auxiliary trip relays and lock-out relays are similar in nature to EM relays and breakers, we believe that based on past performance, a complete functional test trip every 6 years is not warranted. This complete functional test introduces additional risk to our maintenance program not only from a human error perspective but also from the additional frequency of switching and outages required. Our experience has shown that 12 years is an appropriate maximum time interval (rather than 6 years.) 2. The Protection System Maintenance Supplementary Reference (Draft 1), section 8.4, states that the intervals using the term "calendar" are allowed to be completed by the end of the applicable period, not necessarily

Organization	Yes or No	Question 6 Comment
		exactly at the interval specified. The only intervals specified in the PRC-005-2 tables are “calendar years” and “months”. We believe that the “calendar” description should be extended to the “months” designator also to also provide some maintenance flexibility (i.e. if an inspection were performed March 1st and was on a three month interval, it would not be required until the end of June). This section should remove the term “calendar” and use “months” and “years” with an appropriate explanation of the intent of the durations.
Response: The SDT thanks you for your comments. **1. The SDT believes that the intervals within the standard are appropriate. The standard permits the use of Performance-Based maintenance if an entity has documented experience that supports longer intervals.** **2. The standard was modified to append “Calendar” in front of “Months” in the Tables in consideration of your comment.**		
Dynegy	Yes	Suggest including operational verification (i.e. analysis of protection system operation after a system event) as an acceptable method of verification.
Response: The SDT thanks you for your comments. Verification through analysis of events is an acceptable method of verification. Section 11 of the Supplementary Reference Document (page 18) speaks to this topic.		
Oncor Electric Delivery	Yes	The “Supplementary Reference Document” provides good technical justification for the various approaches to a maintenance program (Time Based, Performance Based, and Condition Based) or combinations of these programs that an owner of a Protection System can follow.
Response: The SDT thanks you for your support.		
Xcel Energy	Yes	The information in the supplementary reference document is very helpful and valuable. Yet, it is not clear how the document would be managed/revised, nor what role it plays in compliance monitoring. There needs to be a clear understanding if everything in the document is required for compliance, e.g. criteria for monitored systems, etc. Additionally, we feel that evidence should be addressed within the supplementary reference document.
Response: The SDT thanks you for your support. The FAQ and Supplementary Reference Document are provided as references to present detailed discussions about determination of maintenance intervals and other useful information regarding establishment of a maintenance program, and do not have statutory effect. The SDT believes that these documents provide potentially useful information to the entity in developing and sustaining an effective PRC-005 program, and hopes that these documents will be useful to the entity in establishing support of their program when it is reviewed by the Compliance Enforcement Authority. It is the drafting team's intent that these documents be posted with the standard when approved similarly to the CIP FAQ and the PRC-023 reference document. In order that these documents are initially posted with PRC-005-2 when approved, they must undergo		

Organization	Yes or No	Question 6 Comment
industry comment and review, and the Standards Committee must be convinced through that process that the documents align with the standard and are relevant to the standard. With future revisions to PRC-005, the FAQ and Supplemental Reference Document will have to undergo SDT review and industry comment to remain posted with the standard, and the Standards Committee will have to remain convinced of their accuracy and relevance. **The Supplementary Reference Document and FAQ have been updated to include a discussion pertaining to evidence for compliance.**		
Saskatchewan Power Corporation	Yes	The supplementary reference document is useful information if properly explained and justified. Are the suggestions in the reference document to become part of the standard, or simply recommendations of best practice from industry and serve as a document to reduce the number of interpretations requested?
Response: The FAQ and Supplementary Reference Document are provided as references to present detailed discussions about determination of maintenance intervals and other useful information regarding establishment of a maintenance program, and do not have statutory effect. The SDT believes that these documents provide potentially useful information to the entity in developing and sustaining an effective PRC-005 program, and hopes that these documents will be useful to the entity in establishing support of their program when it is reviewed by the Compliance Enforcement Authority. It is the drafting team's intent that these documents be posted with the standard when approved similarly to the CIP FAQ and the PRC-023 reference document. In order that these documents are initially posted with PRC-005-2 when approved, they must undergo industry comment and review, and the Standards Committee must be convinced through that process that the documents align with the standard and are relevant to the standard. With future revisions to PRC-005, the FAQ and Supplemental Reference Document will have to undergo SDT review and industry comment to remain posted with the standard, and the Standards Committee will have to remain convinced of their accuracy and relevance.		
Lower Colorado River Authority	Yes	The Supplementary Reference is well written and helpful in explaining the drafting teams thought process.
Response: The SDT thanks you for your support.		
Duke Energy	Yes	We strongly believe that this document should be made a part of the standard, either as an Attachment or worked into the requirements and tables. This will bring clarity to PRC-005 that is needed to get away from all the past problems that were due to a lack of clarity with the previous PRC-005 standards. Also, all the explanations and guidance lose force if they are not part of the standard. Auditors will only be bound by the standard.
Response: The SDT thanks you for your comments. The NERC Standard Development Procedure establishes that the standard prescribe requirements, but avoid "how to" or "why" discussions. The SDT, in accordance with FERC Order 693, has prescribed maximum allowable maintenance intervals for various Protection System Components, has provided opportunities for entities to use advanced technologies to perform physical maintenance less frequently, and to use analytical techniques to customize their intervals. At its simplest, an entity could implement a pure time-based program utilizing Table 1a, and much of the additional explanation in the Supplementary Reference Document would not be needed by that entity.		

Organization	Yes or No	Question 6 Comment
ITC Holdings	Yes	1. Will clarifications in the Reference Document be enforceable with the standard? 2. For example page 11 of the reference document notes "Voltage & Current Sensing Device circuit input connections to the protection system relays can be verified by comparison of known values of other sources on live circuits or by using test currents and voltages on equipment out of service for maintenance." Can a maintenance program be confidently established using this or other testing methods included in the reference document? 3. A condensed definition of "Condition Based Maintenance" as described in Section 6 of the Reference document should be included in the standard document itself.
Response: The SDT thanks you for your comments. **1. The FAQ and Supplementary Reference Document are provided as references to present detailed discussions about determination of maintenance intervals and other useful information regarding establishment of a maintenance program, and do not have statutory effect. The SDT believes that these documents provide potentially useful information to the entity in developing and sustaining an effective PRC-005 program, and hopes that these documents will be useful to the entity in establishing support of their program when it is reviewed by the Compliance Enforcement Authority. It is the drafting team's intent that these documents be posted with the standard when approved similarly to the CIP FAQ and the PRC-023 reference document. In order that these documents are initially posted with PRC-005-2 when approved, they must undergo industry comment and review, and the Standards Committee must be convinced through that process that the documents align with the standard and are relevant to the standard. With future revisions to PRC-005, the FAQ and Supplemental Reference Document will have to undergo SDT review and industry comment to remain posted with the standard, and the Standards Committee will have to remain convinced of their accuracy and relevance.** **2. The NERC Standard Development Procedure establishes that the standard prescribe requirements, but avoid "how to" or "why" discussions.** **3. Condition Based Maintenance is not intended to be a defined term; however, a discussion of the attributes of condition-based maintenance is captured within the header of Table 1b and Table 1c of the Standard.**		
E.ON U.S.	Yes	1. With reference to Section 8.1., under additional notes is the following bullet:5. Aggregated small entities will naturally distribute the testing of the population of UFLS/UVLS systems and large entities will usually maintain a portion of these systems in any given year. Additionally, if relatively small quantities of such systems do not perform properly, it will not affect the integrity of the overall program. This implies that incorrect performance of a "relatively small quantity" of UFLS relays is acceptable but with the understanding that it is not optimal. E.ON U.S. agrees with this statement in principle, in that the UFLS program is spread out across the system, and there is not a one to one performance expectation as there is with a transmission line or generation protection system. This calls into question the required intervals for testing of these types of relays, and the performance expectations in a PBM program. Given the number of relays spread out across the distribution system, the testing requirements of UFLS relays require longer testing intervals than other bulk transmission system

Organization	Yes or No	Question 6 Comment
		components. 2. 8.2 Is this requirement expected to be retroactive? That is, if the previous retention policy was followed to the letter, an entity could be fully in compliance based on the previous standard, but not be in compliance if PRC-005-2 were retroactive. 3. 8.3 And 8.4 This discussion explains how time based maintenance intervals were determined. The conclusion is based upon surveys of SPCTF members and their existing practices, and seemed to arrive at a maintenance interval based upon a simple average weighed by the size of the reporting utility. No consideration appears to have been given to utilities who have successfully operated with longer test and calibration intervals. In section 5 of the Supplementary Reference it is stated that "excessive maintenance can actually decrease the reliability of the component or system." With that in mind, some of the intervals defined in the table seem too aggressive. 4. With the proposed PRC-005-2, the Drafting Team has effectively shortened the recommendation for UFLS relays from 10 years to 6 years, with reference to the recommendations of the Protection System Maintenance Technical Reference. E.ON U.S. believes that this is inconsistent with previous comments in Section 8.1, bullet 5 of the notes. 5. Consistent with the comments above and based on E ON U.S.'s internal testing, calibration and verification experience, E.ON U.S. recommends maintenance on UFLS relays that comprise a protection scheme distributed over the power system to be no less than 10 years for Level 1 monitoring and no less than 15 years for Level 2 monitoring. For a PBM program, require the number of countable events within a segment to be no more than 10%, not 4% as proposed.

Response: The SDT thanks you for your comments.

1. The SDT believes that the intervals specified in the standard are appropriate.

2. The new standard will be effective according to the dates established within the standard. The Implementation Plan posted with the standard establishes a path for entities to migrate from their current practices and schedules to those imposed in this standard when approved.

3. Entities that have successful experience with equipment at intervals beyond the Standard's tables can utilize the Standard's PBM option.

4. The SDT believes that the intervals specified in the standard are appropriate, and disagrees that the intervals are inconsistent with the cited clause of the Supplementary Reference Document.

5. Allowing the countable events to be increased to 10% would clearly allow an entity to increase its time interval between testing if there was a failure of less than 10% of the testing segment. However, SDT contends that would be an unacceptably high rate of mal-performing Protection System components, and would be detrimental to system reliability. The acceptable failure rate needs to balance between a goal of ultimate reliability and what could be reasonably expected of a well-performing component population.

Organization	Yes or No	Question 6 Comment
AECI	No	
Puget Sound Energy	Yes	PSE appreciates this document as it provides a lot of further clarity. However, we wonder how this document might be used during an audit. What is the formal process for the supplementation reference document to be changed? How will entities be notified?
Response: The SDT thanks you for your support. This document is not part of the standard, but is intended to provide the rationale of the SDT, as well as guidance about how the various requirements might be met. The explanations are not an "official" interpretation of the standard, but may be useful to determine how to implement various facets of the standard. The FAQ and Supplementary Reference Document are provided as references to present detailed discussions about determination of maintenance intervals and other useful information regarding establishment of a maintenance program, and do not have statutory effect. The SDT believes that these documents provide potentially useful information to the entity in developing and sustaining an effective PRC-005 program, and hopes that these documents will be useful to the entity in establishing support of their program when it is reviewed by the Compliance Enforcement Authority. It is the drafting team's intent that these documents be posted with the standard when approved similarly to the CIP FAQ and the PRC-023 reference document. In order that these documents are initially posted with PRC-005-2 when approved, they must undergo industry comment and review, and the Standards Committee must be convinced through that process that the documents align with the standard and are relevant to the standard. With future revisions to PRC-005, the FAQ and Supplemental Reference Document will have to undergo SDT review and industry comment to remain posted with the standard, and the Standards Committee will have to remain convinced of their accuracy and relevance.		

7. The SDT has provided a "Frequently-asked Questions" document to address anticipated questions relative to the standard. Do you have any comments on the FAQ? Please explain in the comment area.

Summary Consideration: In general, respondents expressed appreciation for the additional technical discussion included within this document. The SDT responded to many comments by explaining the relationship between the standard and the FAQ. Several respondents suggested that elements of the extensive discussion be contained within the standard itself, which is contrary to the guidance within the paradigm for NERC Standards. Additionally, many of the comments in Questions 1-5 were addressed by developing additional FAQ content and referring the respondents to the revised FAQ.

Organization	Yes or No	Question 7 Comment
SCE&G		1. The FAQ should be expanded to address the issues raised above with verification of trip circuits as to what is an acceptable method meeting the intent of the standard. 2. We also suggest changing "prove" to "verify" on FAQ 3a to be consistent with the wording of the requirement. 3. Also, for a single bus with one set of bus potential transformers, how does one verify proper functioning of the potentials? Is a reasonableness criterion adequate?
Response: The SDT thanks you for your comments. **1. The SDT agrees. The FAQ has been modified to address your concerns. (See FAQ II-4-E, page 11.)** **2. The SDT agrees. The FAQ has been modified to address your concerns. (See FAQ II-3-A, page 8.)** 3. **The entity must verify that the protective devices are receiving the expected potential from the potential transformers or equivalent. If the potentials, both magnitude and phase angle, can be determined to be reasonable, that would suffice. (See FAQ II-3-A, page 8.)**		
Bonneville Power Administration		Will this document be a part of the standard? Are its explanations the official interpretation of the standard?
Response: The SDT thanks you for your comments. **The FAQ and Supplementary Reference Document are provided as references to present detailed discussions about determination of maintenance intervals and other useful information regarding establishment of a maintenance program, and do not have statutory effect. The SDT believes that these documents provide potentially useful information to the entity in developing and sustaining an effective PRC-005 program, and hopes that these documents will be useful to the entity in establishing support of their program when it is reviewed by the Compliance Enforcement Authority. It is the drafting team's intent that these documents be posted with the standard when approved similarly to the CIP FAQ and the PRC-023 reference document.**		

Organization	Yes or No	Question 7 Comment
City Utilities of Springfield, MO	No	
Dynegy	No	
Electric Market Policy	No	
ENOSERV	No	
Florida Municipal Power Agency, and its Member Cities	No	
Georgia System Operations Corporation	No	
Green Country Energy LLC	No	
Indianapolis Power & Light Co.	No	
Operations and Maintenance	No	
Platte River Power Authority Maintenance Group	No	
TVA	No	
US Bureau of Reclamation	No	
Western Area Power Administration	No	
Wisconsin Electric	No	
Wolverine Power Supply Cooperative, Inc.	No	

Organization	Yes or No	Question 7 Comment
E.ON U.S.	No	E.ON U.S. disagrees with commissioning tests not being considered as a baseline for subsequent maintenance activities. Commissioning tests should be counted as the initial testing in the scheme of a maintenance program
Response: The SDT thanks you for your comments. **As long as the requirements of the standard are met by the commissioning tests, they can "start the clock" for future maintenance testing. The FAQ has been reworded to clarify this point. (The revised FAQ is IV-2-B, page 23.)**		
Ontario Power Generation	No	It was a good idea to prepare such a document.
Response: The SDT thanks you for your support.		
Pepco Holdings Inc.	No	Item 3.B. (Page 6) claims that a small measurable quantity in 3I0 and 3V0 inputs to relays -may- be evidence that the circuit is performing properly. This statement is weak at best, and incorrect at worst. A balanced transmission system may exhibit 3I0 and 3V0 quantities that are not measurable, and those that are measurable cannot be compared to other readings, since CT/PT error often exceeds system imbalance. Since these inputs are verified at commissioning, recommend that maintenance verification require ensuring that phase quantities are as expected and that 3IO and 3VO quantities appear equal to or close to 0.
Response: The SDT thanks you for your comments. **The SDT agrees; See FAQ II-3-B, page 9.**		
Exelon Generation Company, LLC	No	None
MRO NERC Standards Review Subcommittee	No	Overall, the FAQ's are helpful toward understand what the SDT was thinking. Explanations for questions dealing with the maintenance activities (e.g., battery testing) indicate an attempt to line up the requirement with IEEE standards. While it is commendable to attempt alignment reliability standards with other industry standards, it also begs the question of why requirements that are already covered by other standards should be repeated in reliability standards. In addition, if the other standards are changed, then they could become inconsistent with or contradictory to the reliability standard.
Response: The SDT thanks you for your support. The IEEE standards are voluntary standards, and do not establish any requirements, and also are not measurable. PRC-005 standard requirements are loosely aligned with the IEEE standards and any future minor changes to those IEEE standards would not significantly alter the correlation between PRC-005 standard requirements for batteries and the IEEE recommendations.		

Organization	Yes or No	Question 7 Comment
American Transmission Company	No	Overall, the FAQ's are helpful. Explanations for questions dealing with the maintenance activities (e.g., battery testing) indicate an attempt to line up the requirement with IEEE standards. While commendable to attempt alignment with the industry, it is further justification that maintenance activities should not be included in the standard. Over the long term, technology or IEEE standards could change making the compliance standard inconsistent.
Response: The SDT thanks you for your support. The IEEE standards are voluntary standards, and do not establish any requirements, and also are not measurable. PRC-005 standard requirements are loosely aligned with the IEEE standards and any future minor changes to those IEEE standards would not significantly alter the correlation between PRC-005 standard requirements for batteries and the IEEE recommendations.		
PacifiCorp	No	Very helpful.
Response: Thank you for your support.		
Austin Energy	Yes	
Entergy Services, Inc	Yes	
Manitoba Hydro	Yes	
Public Service Enterprise Group Companies	Yes	1) R1 - PRC-005-1 required the protection owner to supply a "basis" for the chosen maintenance intervals. Is it intended that the new standard will no longer require the protection owners to provide a basis for their intervals as long as they meet (or better) the published required intervals? 2) Compliance 1.4 Data Retention Needs more clarity. Some items require 12 years maximum maintenance interval. However, we may perform the same maintenance in 6 years. The requirement for data retention is 2 maintenance intervals. In this example, does this mean 12 years or 24 years? Are we required to maintain records for the maximum maintenance intervals allowed by the standard or only for the two shorter maintenance intervals that we actually use? 3) Compliance will need some guidance on to what is required for "proper documentation". Generally, the relay technicians will scribe the actual test values for a given tests requiring the application of AC voltage and current. However, as an example, when performing DC checks (DC aux relay), the technician may simply state that the aux relay is "OK" without stating the DC coil pickup value in volts. Is this acceptable? Another example may be when performing battery inspections (i.e., verify proper voltage of station battery, verify that no DC grounds exist, etc), the inspector may simply indicate/document that the battery is "Ok". This would indicate that appropriate 3 month inspections (as per table 1a) were completed and found to be within tolerances. Is this acceptable? If

Organization	Yes or No	Question 7 Comment
		specific details are required to be stored on test media (paper test sheets, computer based data storage, etc), then please make some comments as such. 4) Table 1a DC supply. The 3 month inspection requires "verify that no dc supply grounds are present". This needs further clarification. What is the defined "limit" to determine whether we have a DC ground? The detection methods for determining the presence of a DC ground will vary from indicating light balance to actual DC ammeters or voltmeters. It is assumed that the intent of this requirement is to ensure that there are no full DC grounds (dead shorts) in the DC terminals. Please clarify. 5) In the group by type of BES facility descriptions on pages 15 and 16 there is discussion about generation station auxiliary transformers and associated protection devices. It also cites examples of relays which need not be included even though they could result in tripping of the generating station. The line of demarcation is not well defined in the FAQs or in the standard itself. Suggest that verbiage be added that clearly defines the element (transformer) directly connected to the BES and its associated protection is what is included in the PSMP requirements, items connected at lower voltage (down stream) are not within the PSMP requirement. 6) On page 15, the sample list of what is included in the standard, suggest that the list be expanded to show what is not included (a relay that monitors parameters and is used for control/ alarm but not protection); generator excitation controls that trip an auxiliary exciter. The list of items not included in the PSMP but that could trip the unit should be further defined and expanded.

Response: The SDT thanks you for your comments.

1. The SDT agrees that no basis is required for level 1 monitoring as detailed in Table 1a. Monitoring attributes will be required to meet Table 1b and Table 1c requirements. A performance based program will require further documentation; see Attachment A of the standard.

2. The SDT has modified the Data Retention area of the standard to clarify this.

3. The SDT will consider acceptable forms of evidence when developing the Measures. See the FAQ IV-1-B, page 21. Also, see Section 15.6 (page 24) of the Supplementary Reference Document for a discussion of "evidence".

4. Table 1a has been modified to address this, and an FAQ (FAQ II-5-I, page 15) has been added to clarify this. The revised language in the standard reads:

Check for unintentional grounds.

5. The SDT agrees; the FAQ has been modified to address your concerns see FAQ III-2-A, page 20.

6. The definition of Protection System states that "Protective relays, associated communication systems necessary for correct operation of protective devices, voltage and current sensing inputs to protective relays, station DC supply, and DC control circuitry from the station DC supply through the trip coil(s) of the circuit breakers or other interrupting devices." Controls and alarms are excluded per the definition.

Organization	Yes or No	Question 7 Comment
Ameren	Yes	1) We don't think an Executive Summary is needed. 2) Please include the Supplement's explanation of A/D verification method from Supplement page 9. 3) What role does the FAQ play in Compliance Monitoring and Enforcement? 4) Refer to question 2 and add our items # 2, 3, 4, 5, 7, and 11 to FAQ. 5) Please add FAQ that provides the NERC Compliance Registry Criteria for Generating Facilities, to clarify applicability to >20MVA direct BES connection, aggregate >75MVA etc. 6) FAQ 2A p17 states that commissioning is construction, not maintenance. It seems like you're ignoring the significant verification, testing, inspection, and calibration activities that occur in commissioning. Should the in-service date be assigned to these components for determining their next maintenance? 7) Refer to question 3 and add our items # 4 to FAQ.
Response: The SDT thanks you for your comments. **1. The SDT thanks you for your input.** **2. The SDT agrees; this information was already present in FAQ V-3-B (page 38).** **3. The FAQ and Supplementary Reference Document are provided as references to present detailed discussions about determination of maintenance intervals and other useful information regarding establishment of a maintenance program, and do not have statutory effect. The SDT believes that these documents provide potentially useful information to the entity in developing and sustaining an effective PRC-005 program, and hopes that these documents will be useful to the entity in establishing support of their program when it is reviewed by the Compliance Enforcement Authority. It is the drafting team's intent that these documents be posted with the standard when approved similarly to the CIP FAQ and the PRC-023 reference document.** **4. The SDT agrees; see our response to your comment on Question 2.** **5. The NERC Compliance Registry Criteria and Regional BES definitions are themselves requirements upon entities, and need not be explained within the PRC-005 FAQ.** **6. As long as the requirements of the standard are met by the commissioning tests, they can "start the clock" for future maintenance testing. See FAQ IV-2-B (page 23).** **7. The SDT agrees; see our response to your comment on Question 3.**		
NextEra Energy Resources	Yes	a. NextEra Energy believes the need for an extensive "Supplementary Reference Document", in addition to 13 pages of tables and an attachment in the standard itself, illustrates that the proposal is too prescriptive and complex for most entities to practically implement. NextEra Energy would prefer the SDT leave the existing

Organization	Yes or No	Question 7 Comment
		requirements substantially intact or, if most industry commenters prefer the SDT's approach, that the SDT attempt to simplify it.7. The SDT has provided a "Frequently-asked Questions" document to address anticipated questions relative to the standard. Do you have any comments on the FAQ? Please explain in the comment area. 1 Yes 0 No Comments: a. An alternative to measuring battery specific gravity is to measure float voltage and float current as described in Annex A4 of IEEE Std 450-2002. b. FAQ Page 17 (#1B): It is outside the jurisdiction of the standards development team to determine acceptable forms of evidence. This should be decided by the Regional Entities. c. FAQ Page 15 (#1A): This question should not have been included since it is addressing the definition of BES, which is currently being addressed by another NERC Group. d. FAQ Page 15 (#2): Although the FAQ is not enforceable, the answer provided may be interpreted as enforceable. This should be included in the standard and not in the FAQ.
Response: The SDT thanks you for your comments. **The SDT believes that the level of prescription within the standard is necessary to satisfy the guidance in FERC Order 693, and also to address observations from the Compliance Monitoring entities (the Regional Entities and NERC) that PRC-005-1 is excessively general. FERC Order 672 also specifies that NERC Standards should be clear and unambiguous. The SDT has therefore defined the minimum activities and maximum intervals necessary to implement an effective PSMP.** **a. The SDT has modified the standard in consideration of your comment by removing the maintenance activity of measuring specific gravity.** **b. Other commenters have requested assistance in determining applicable evidence. The SDT has provided guidance that agrees with entities' experience regarding effective evidence during actual audits. See FAQ IV-1-B, page 21 and Supplementary Reference Document, Section 15.6, page 24.** **c. Including the definition of the BES in the FAQ is helpful to some entities, and addresses common questions from other commenters; the FAQ states that the RRO's may have additional criteria.** **d. The FAQ is intended to present examples of applicable devices, and is not intended to be all-inclusive. The requirements are established by the standard definition of Protection System and the section 4 ("Applicability").**		
CPS Energy	Yes	Adds to the confusion with the standard, FAQ, and Supplemental. The three documents at times describe things a little differently.
Response: The SDT thanks you for your comments, however in the future please be more specific and identify the actual discrepancies so we can		

Organization	Yes or No	Question 7 Comment
improve the documents.		
AEP	Yes	Although helpful in understanding and clarifying intent, the requirements of a standard should be clearly written so that multiple, lengthy supporting documents are not needed. These supporting documents do not get recorded into the registry as part of the standard and may or may not be used by auditors during compliance audits which could lead to different interpretations.
Response: The SDT thanks you for your comments. The SDT believes that providing additional references helps clarify the requirements in the standard. The SDT must address the directives of FERC orders 672 and 693 without being too prescriptive within the standard itself. According to the NERC Standard Development Procedure, a standard is to contain only the prescriptive requirements; supporting discussion is to be in a separate document.		
Transmission Owner	Yes	An alternative to measuring battery specific gravity is to measure float voltage and float current as described in Annex A4 of IEEE Std 450-2002.
Response: The SDT has modified the standard in consideration of your comment by removing the maintenance activity of measuring specific gravity.		
SERC (PCS)	Yes	Change “prove” to “verify” on FAQ 3a (under Voltage and Current Sensing Devise Inputs to Protective Relays) to be consistent with the wording of the requirement.
Response: The SDT thanks you for your comments. See FAQ II-3-A (page 8) – the word, “prove” was replaced with “verify” as proposed.		
Detroit Edison	Yes	Example #1 on page 21 states “A vented lead-acid battery with low voltage alarm connected to SCADA. (level 2)”. However, Table 1b indicates that detection and alarming of dc grounds is also required for level 2.
Response: The SDT thanks you for your comments. The cited example is intended to show a mixture of Level 1 and Level 2 monitored components. Those components not equipped with Level 2 monitoring must be maintained in accordance with Table 1a. Also, see the Decision Tree at the end of the FAQ, addressing DC Supply monitoring levels.		
ITC Holdings	Yes	1. FAQ page 6 question 3C should be clarified in the standard document itself. What is the technical justification for omitting insulation testing of the wiring for DC control, potential and current circuits between the station-yard equipment and the relay schemes? We feel this wiring is susceptible to transients which, over time, may compromise the insulation, and therefore should be tested. 2. FAQ page 17 question 2A the standard should define when the first maintenance activity is to be performed. We include our maintenance activities during commissioning, and set the next maintenance due date based on the testing interval.

Organization	Yes or No	Question 7 Comment
		3. Will clarifications in the FAQs be enforceable with the standard? Can a maintenance program be confidently established using this or other answers included in the FAQ's?
Response: The SDT thanks you for your comments. **1. The SDT does not believe that insulation testing needs to be included within the minimum required maintenance activities; the SDT is not aware of a body of evidence that suggests that these tests should be included as a requirement. The proposed standard does not prevent an entity from including such tests in its program if their experience has indicated that such testing is needed. Furthermore, requirements for checking for proper current and voltage at the relays and checking for DC grounds, provides some assurance of cable insulation integrity.** **2. As long as the requirements of the standard are met by the commissioning tests, they can "start the clock" for future maintenance testing. See FAQ IV-2-B, page 23.** **3. The FAQ and Supplementary Reference Document are provided as references to present detailed discussions about determination of maintenance intervals and other useful information regarding establishment of a maintenance program, and do not have statutory effect. The SDT believes that these documents provide potentially useful information to the entity in developing and sustaining an effective PRC-005 program, and hopes that these documents will be useful to the entity in establishing support of their program when it is reviewed by the Compliance Enforcement Authority.**		
Nebraska Public Power District	Yes	On page 17, the answers to questions 2B and 2C indicate that there is no allowance or provision to exceed the Maximum Maintenance Interval under any circumstances, except that natural disasters or other events of force majeure will receive special consideration when determining sanctions. The rigidity of this performance requirement could conceivably require equipment to be tested even though it is out of service in order to remain compliant, adding unnecessary cost and waste to the PSMP of the regulated entities. We believe that a prescriptive process for deferring testing and maintenance beyond the stated interval would be beneficial to allow the necessary flexibility to manage the PSMP effectively.
Response: The SDT thanks you for your comments. The SDT considered this issue when developing the intervals, and realizes that some entities may need to perform certain maintenance activities more frequently to assure that the activities are performed within the required intervals. The SDT is concerned that a "grace period", if permitted, would be used to establish a de-facto longer interval, and that the established intervals would thus not be measurable. Additionally, FERC Order 693 directed that NERC establish maximum maintenance intervals, and allowing for a "grace period" would not conform to this directive. Please refer to Section 8 of the Supplementary Reference Document (page 9) for a discussion on this issue. **Should maintenance be due on equipment that is out-of service for a protracted period, the required maintenance should only be necessary before the equipment is returned to service. However, you may encounter compliance challenges if you did not complete the maintenance during the scheduled period, and should be prepared to document the out-of-service period and the subsequent maintenance.**		
Southern Company	Yes	Part of the responses could be more correctly stated: Page 11E, "why is specific gravity testing required" The specific gravity measurements do not reflect accurate state of charge for lead-calcium batteries. (Float current is

Organization	Yes or No	Question 7 Comment
		a better parameter for this indication)
Response: The SDT thanks you for your comments concerning specific gravity being required. The SDT has modified the standard by removing the requirement for specific gravity testing.		
FirstEnergy	Yes	Pg. 17 (What forms of evidence are acceptable) Although Measures are not yet developed and posted with the standard, we wanted to point out that the SDT should consider adding these acceptable forms of evidence in the measures of the standard.
Response: The SDT thanks you for your comments. The SDT will consider identifying acceptable forms of evidence when developing the Measures.		
Progress Energy	Yes	Progress Energy is unclear how a new/revised standard can have a 30 page FAQ document associated with it. If questions need to be addressed, the answers should be incorporated into the existing standard. During this stage of the draft, all questions should be addressed, not left to the side in an "interpretation" paper.
Response: The SDT thanks you for your comments. The SDT believes that providing additional references helps clarify the requirements in the standard. The SDT must address the directives of FERC orders 672 and 693 without being too prescriptive within the standard itself. According to the NERC Standard Development Procedure, a standard is to contain only the prescriptive requirements; supporting discussion is to be in a separate document.		
RRI Energy	Yes	Reverse power relays do not belong in the list of devices within the scope of this standard; reverse power is not used for generator protection or protection of a BES element. Aside from the protection of reverse power for other non-BES equipment, a generator can operate continuously as a generator, synchronous condenser, or a synchronous motor. Reverse power relays (or reverse power elements in multi-function relays) is commonly used as a control function for automatic shut-down purposes, which is not a protective function. Other reverse power protection, with longer time delays, is provided for turbine protection, which is not within the scope of the NERC Standards.
Response: The SDT thanks you for your comments. For some power plants, the reverse power relays trip the generation output breaker(s) and thus are in scope per section 4.2.5.1 of the standard. The list of devices provides examples which may or may not be in scope of the standard depending upon how they applied.		
CenterPoint Energy	Yes	See CenterPoint Energy's response to question 6. The need for an FAQ document in addition to an extensive "Supplementary Reference Document" further illustrates the complexity and impracticality of the proposed standard revisions.
Response: The SDT thanks you for your comments. See the response to your comments on Question 6.		

Organization	Yes or No	Question 7 Comment
The SDT believes that providing additional references helps clarify the requirements in the standard. The SDT must address the directives of FERC orders 672 and 693 without being too prescriptive within the standard itself. According to the NERC Standard Development Procedure, a standard is to contain only the prescriptive requirements; supporting discussion is to be in a separate document.		
Oncor Electric Delivery	Yes	The FAQ document is an excellent resource document for Protection System Owners to understand why the maintenance activities listed in the proposed standard were chosen.
Response: The SDT thanks you for your support.		
JEA	Yes	The FAQ is a well written document and the team should take pride in its clarity and informative content. One area that would be good to have further clarification, is if the SDT could provide a current industry product or example of the "software latches or control algorithms, including trip logic processing implemented as programming components, such as a microprocessor relay that takes the place of (conventional) discrete component auxiliary relays or lockout relays that do not have to be routinely tested." Is this a microprocessor lockout relay (that does not require trip testing?)
Response: The SDT thanks you for your support. The description indeed does reflect a microprocessor relay with imbedded lockout relay functions that does not require trip testing for the lockout function. However, the breaker trip coil would still need to be tested as otherwise required in the standard. Because of the NERC Antitrust Policy, the SDT is unable to provide commercial examples.		
Northeast Power Coordinating Council	Yes	The FAQ is helpful in answering many of the obvious questions.
Response: The SDT thanks you for your support.		
Saskatchewan Power Corporation	Yes	The FAQ section is beneficial, but would suggest reviewing it to determine if it can be integrated within the reference document.
Response: The SDT thanks you for your support. The SDT will, to the degree possible, integrate material from the FAQ into the Supplementary Reference Document. The SDT additionally believes that there is value in the FAQ that presents the material as questions and answers.		
Lower Colorado River Authority	Yes	The Frequently-asked Questions document is very well written and very helpful. The decision trees are a good addition.
Response: The SDT thanks you for your support.		

Organization	Yes or No	Question 7 Comment
Xcel Energy	Yes	1. The Frequently-asked Questions seem to act as interpretations to the standard. What roll will they play in determining compliance? 2. On table 1b (page 11) the UFLS and UVLS maintenance activities indicate that tripping of the interrupting device is not required, but it uses the term "functional trip test". The FAQ indicates that a "functional trip test" does require tripping the interrupting device. This conflicts with what is in the table and should be corrected in the FAQ to reflect that no trip is required.
Response: The SDT thanks you for your comments. **1. The FAQ and Supplementary Reference Document are provided as references to present detailed discussions about determination of maintenance intervals and other useful information regarding establishment of a maintenance program, and do not have statutory effect. The SDT believes that these documents provide potentially useful information to the entity in developing and sustaining an effective PRC-005 program, and hopes that these documents will be useful to the entity in establishing support of their program when it is reviewed by the Compliance Enforcement Authority. It is the drafting team's intent that these documents be posted with the standard when approved similarly to the CIP FAQ and the PRC-023 reference document.** **2. The SDT agrees with your comment. See FAQ II-4-E, page 11.**		
Illinois Municipal Electric Agency	Yes	Under "Group by Type of BES Facility", 1. (page 15) "The radial exemption in the BES definition should be clarified to include transmission subsystems within a single municipality, where the transmission facilities serving only subsystem load with one transmission source - essentially operate radially. A more practical application of the radial exemption would address smaller TOs whose system has minimal potential to impact the BES as a whole.
Response: The SDT thanks you for your comments. The BES is a NERC and Regional defined term, and is outside the scope of this drafting team. Requests for clarification regarding the BES definition should be referred to your Regional Entity. It isn't clear to the SDT whether the example you request is appropriate or accurate.		
Duke Energy	Yes	We strongly believe that this document should be made a part of the standard, either as an Attachment or worked into the requirements and tables. This will bring clarity to PRC-005 that is needed to get away from all the past problems that were due to a lack of clarity with the previous PRC-005 standards. Also, all the explanations and guidance lose force if they are not part of the standard. Auditors will only be bound by the standard.
Response: The SDT thanks you for your comments. The SDT must address the directives of FERC orders 672 and 693 without being too prescriptive within the standard itself. The SDT feels that providing additional references helps clarify the requirements in the standard and hopes that these documents will be useful to the entity in establishing support of their program when it is reviewed by the Compliance Enforcement Authority. According to the NERC Standard Development Procedure, a standard is to contain only the prescriptive requirements; supporting discussion is to be in a separate		

Organization	Yes or No	Question 7 Comment
document.		
AECI	Yes	**Group by Type of Maintenance Program:** **2. Time-Based Protection System Maintenance (TBM) Programs** **A. What does this Maintenance standard say about commissioning?** Commissioning tests are regarded as a construction activity, not a maintenance activity. **COMMENT 1:** If we understand the question and answer correctly, we disagree. We believe that the standard should accept commissioning as the first date for the maintenance testing if the commissioning tests correspond to the Standard's TBM testing procedures. Otherwise, maintenance tests on a new substation will be required to be completed (again) based on the Implementation Plan guidelines for PRC-005-02. **Group by Type of Maintenance Program:** **2. Time-Based Protection System Maintenance (TBM) Programs** **C. If I am unable to complete the maintenance as required due to a major natural disaster (hurricane, earthquake, etc.), how will this affect my compliance with this standard.** The NERC Sanction Guidelines provide that the Compliance Monitor will consider extenuating circumstances when considering any sanctions. **COMMENT 2:** We feel that guidelines should be provided for "extenuating circumstances", specifically addressing natural disasters.
Response: The SDT thanks you for your comments. **The FAQ will be reworded to clarify that commission tests can be used to establish initial performance of maintenance as long as the requirements Tables 1a, 1b, & 1c are fulfilled. See FAQ IV-2-B, page 23.** **The SDT believes that "extenuating circumstances" are addressed by the NERC Sanction Guidelines, and are therefore a discretionary issue between the entity and the Compliance Enforcement Authority. Because of the variability in natural disasters and their potential impact on Protection System maintenance programs, it does not seem practical to develop measurable requirements addressing this issue in the context of this standard. Additionally, FERC Order 693 directed that NERC establish maximum maintenance intervals, and allowing for a "grace period" would not conform to this directive. Please refer to Section 8 (page 9) of the Supplementary Reference Document for a discussion on this issue.**		
Puget Sound Energy	Yes	PSE appreciates this document as it provides a lot of further clarity. PSE hopes this document will be updated through by comments and questions provided during the development process. We wonder how this document might be used in an audit as well. What is the formal process for the supplementation reference document to be

Organization	Yes or No	Question 7 Comment
		changed? How will entities be notified?

Response: Thank you for your support.

The FAQ and Supplementary Reference Document are provided as references to present detailed discussions about determination of maintenance intervals and other useful information regarding establishment of a maintenance program, and do not have statutory effect. The SDT believes that these documents provide potentially useful information to the entity in developing and sustaining an effective PRC-005 program, and hopes that these documents will be useful to the entity in establishing support of their program when it is reviewed by the Compliance Enforcement Authority. It is the drafting team's intent that these documents be posted with the standard when approved similarly to the CIP FAQ and the PRC-023 reference document. In order that these documents are initially posted with PRC-005-2 when approved, they must undergo industry comment and review, and the Standards Committee must be convinced through that process that the documents align with the standard and are relevant to the standard. With future revisions to PRC-005, the FAQ and Supplemental Reference Document will have to undergo SDT review and industry comment to remain posted with the standard, and the Standards Committee will have to remain convinced of their accuracy and relevance.

8. If you are aware of any conflicts between the proposed standard and any regulatory function, rule, order, tariff, rate schedule, legislative requirement, or agreement please identify the conflict here.

Summary Consideration: Most respondents were unaware of any conflicts. Some felt that conflicts existed with existing business or Regional practices, or with other organizations such as the Nuclear Regulatory Commission. The SDT provided clarifying explanations to illustrate that conflicts are not actually present.

Organization	Question 8 Comment
ITC Holdings	Comments: We are not aware of any conflicts.
Response: The SDT thanks you for your comments.	
MRO NERC Standards Review Subcommittee	Conflict: Order 672 says that standards should be clear and unambiguous.
Response: The SDT thanks you for your comments. The SDT must address the directives of FERC orders 672 and 693 without being too prescriptive within the standard itself. The SDT believes that providing additional references helps clarify the requirements in the standard. Also, the SDT believes that the level of prescription within the standard is necessary to satisfy the guidance in FERC Order 693, and also to address observations from the Compliance Monitoring entities (the Regional Entities and NERC) that PRC-005-1 is excessively general.	
Lower Colorado River Authority	Conflict: Potential conflict with PRC-023 as to which PRS systems are applicable per this standard. Comments: PRC-005-2 requires compliance for this standard for all non-radial systems over 100 kV; while, PRC-023-1 prescribes it as below: 1. Title: Transmission Relay Loadability2. Number: PRC-023-13. Purpose: Protective relay settings shall not limit transmission loadability; not interfere with system operators' ability to take remedial action to protect system reliability and; be set to reliably detect all fault conditions and protect the electrical network from these faults.4. Applicability: 4.1. Transmission Owners with load-responsive phase protection systems as described in Attachment A, applied to facilities defined below:4.1.1 Transmission lines operated at 200 kV and above.4.1.2 Transmission lines operated at 100 kV to 200 kV as designated by the Planning Coordinator as critical to the reliability of the Bulk Electric System.4.1.3 Transformers with low voltage terminals connected at 200 kV and above.4.1.4 Transformers with low voltage terminals connected at 100 kV to 200 kV as designated by the Planning Coordinator as critical to the reliability of the Bulk Electric System.4.2. Generator Owners with load-responsive phase protection systems as described in Attachment A, applied to facilities defined in 4.1.1 through 4.1.4.4.3. Distribution Providers with load-responsive phase protection systems as described in Attachment A, applied according to facilities defined in 4.1.1 through 4.1.4., provided that those facilities have bi-directional flow capabilities.4.4. Planning Coordinators. We believe Bulk Electric System (BES) owners resources would be better utilized by focusing on relay systems as defined in

Organization	Question 8 Comment
	the above PRC-023-1 and this would still provide high level of reliability for the BES, since not all facilities operating between 100 200KV are critical to the BES. This would not preclude any utilities from applying this standard to other facilities operating at the lower voltage range. Why did the drafting team not use the application language sited in the "Protection System Maintenance - A NERC Technical Reference" which is similar to what is described above from PRC-023-1?
Response: The SDT thanks you for your comments. The Energy Policy Act of 2005, as well as various FERC orders and the NERC Standards Development Process requires that reliability standards should be applicable to the BES (or, in the case of the Energy Policy Act, the BPS, which is almost synonymous). In the case of PRC-023-1, cited in the comment, that SDT as well as the NERC Staff was required to carefully explain why this standard was not specifically applicable to the BES, but instead to a subset of the BES. The 2007-17 SDT has determined that a similar rationale cannot be effectively determined for PRC-005-2, and thus specified that it should be applicable to the BES. It is noted that this applicability is similar to the applicability for PRC-005-1.	
Exelon Generation Company, LLC	Conflict 1. Nuclear generators are licensed to operate and regulated by the Nuclear Regulatory Commission (NRC). Each licensee operates in accordance with plant specific Technical Specifications (TSs) issued by the NRC. TS allow for a 25% grace period may be applied to TS Surveillance Requirements (SRs). Referencing NRC issued NUREGs for Standard Issued Technical Specifications (NUREG-143 through NUREG-1434) Section 3.0, "Surveillance Requirement (SR) Applicability, SR 3.02 states the following:" The specified Frequency for each SR is met if the Surveillance is performed within 1.25 times the interval specified in the Frequency, as measured from the previous performance or as measured from the time a specified condition of the Frequency is met." 2. Battery Charger Testing 2a. All conditions (grounds, voltages etc) should be compared to "acceptable limits" as specified in nuclear station design basis documents, industry standards or vendor data. 2b. IEEE 450 does not use the word "proper" as utilized in Table 1a (e.g., "record voltage of each cell v/s verify proper voltage of each individual cell.") 3. The NRC Maintenance Rule (10 CFR 50.65) requires monitoring the effectiveness of maintenance to ensure reliable operation of equipment within the scope of the Rule. Adjustments are made to the PM (preventative maintenance) program based on equipment performance. The Maintenance Rule program should provide an acceptable level of reliability and availability for equipment within its scope. Comments: 4. All maintenance activities should include a "grace" period to allow for changes to a nuclear generator's refueling schedule and emergent conditions that would prevent the safe isolation of equipment and/or testing of function. "Grace" periods align with currently implemented nuclear generator's maintenance and testing programs.

Organization	Question 8 Comment
	5. The 3-month maximum interval should be extended to include a grace period to ensure that a 25% grace period is included to align with current nuclear templates that implement NRC TS SRs are documented in the response to Question 8.

Response: The SDT thanks you for your comments.

1. The SDT considered this issue when developing the intervals, and realizes that some entities may need to perform certain maintenance activities more frequently to assure that the activities are performed within the required intervals. Specifically, for generation facilities, there would seem to be numerous opportunities within the 6-year or longer intervals to perform the required maintenance during a scheduled plant outage, and maintenance with shorter intervals can be characterized as non-intrusive maintenance, more of an inspection than anything else; the SDT believes that this maintenance can be done on-line. The SDT is concerned that a "grace period", if permitted, would be used to establish a de-facto longer interval, and that the established intervals would thus not be measurable. Additionally, FERC Order 693 directed that NERC establish maximum maintenance intervals, and allowing for a "grace period" would not conform to this directive. Please refer to Section 8 of the Supplementary Reference Document (page 9) for a discussion on this issue.

2a. The SDT agrees that each entity establishes its own "acceptable limits". In this case, "acceptable limits" would seem to be determined in the materials cited, and would apply for PRC-005-2.

2b. The SDT agrees. The SDT modified the standard to address your concerns. The revised maintenance activity now reads: Inspect cell condition of individual battery cells where cells are visible, or measure battery cell/unit internal ohmic values where cells are not visible.

3. The entity must satisfy all applicable requirements (in this case, NERC PRC-005-2 and the NRC 10 CFR 50.65) as they apply to common equipment. Since the NRC requires monitoring of the effectiveness of the program, you must do so even if this isn't in the NERC standard.

4. The SDT considered this issue when developing the intervals, and realizes that some entities may need to perform certain maintenance activities more frequently to assure that the activities are performed within the required intervals. Specifically, for generation facilities, there would seem to be numerous opportunities within the 6-year or longer intervals to perform the required maintenance during a scheduled plant outage, and maintenance with shorter intervals can be characterized as non-intrusive maintenance, more of an inspection than anything else; the SDT believes that this maintenance can be done on-line. The SDT is concerned that a "grace period", if permitted, would be used to establish a de-facto longer interval, and that the established intervals would thus not be measurable. Additionally, FERC Order 693 directed that NERC establish maximum maintenance intervals, and allowing for a "grace period" would not conform to this directive. Please refer to Section 8 of the Supplementary Reference Document (page 9) for a discussion on this issue.

5. The SDT considered this issue when developing the intervals, and realizes that some entities may need to perform certain maintenance activities more frequently to assure that the activities are performed within the required intervals. Specifically, for generation facilities, there would seem to be numerous opportunities within the 6-year or longer intervals to perform the required maintenance during a scheduled plant outage, and maintenance with shorter intervals can be characterized as non-intrusive maintenance, more of an inspection than anything else; the SDT believes that this maintenance can be done on-line. The SDT is concerned that a "grace period", if permitted, would be used to establish a de-facto longer interval, and that the established intervals would thus not be measurable. Additionally, FERC Order 693 directed that NERC establish maximum maintenance intervals, and allowing for a "grace period" would not conform to this directive. Please refer to Section 8 (page 9) of the Supplementary Reference Document for a

Organization	Question 8 Comment
discussion on this issue.	
City Utilities of Springfield, MO	CU is unaware of any conflicts.
Response: The SDT thanks you for your comments.	
Florida Municipal Power Agency, and its Member Cities	FMPA is not aware of any conflicts
Response: The SDT thanks you for your comments.	
Green Country Energy LLC	It would be beneficial to include some administrative (man hour) and cost estimates to comply with this and any future proposed standards so if major budget impacts could be addressed.
Response: The SDT thanks you for your comments. The SDT is unable to assess the costs of any specific entity to comply with this standard, as the SDT is not aware of the degree to which that entity's current program would satisfy the requirements of this standard. Additionally, "man-hours" would vary widely with the size of the entity.	
Operations and Maintenance	No conflicts known.
AEP	No known conflicts.
Duke Energy	None
Electric Market Policy	None
Nebraska Public Power District	None
PacifiCorp	None known.
SERC (PCS)	None known.
Ontario Power Generation	Not aware of any
Georgia System Operations	Not aware of any.

Organization	Question 8 Comment
Corporation	
American Transmission Company	Order 672 says that standards should be clear and unambiguous. This proposed standard is very complex. While the standard allows entities to select the appropriate maintenance strategy (time based, performance based or conditioned based) for their system the amount of data and tracking required to demonstrate compliance will be overwhelming.
Response: The SDT thanks you for your comments. At its simplest, using time-based maintenance and Table 1a, the documentation requirements should not be vastly different than those to prove compliance to PRC-005-1 for a strong compliance program. If more advanced strategies are used, documentation requirements to demonstrate compliance may very well increase. **The SDT believes that it has clearly and unambiguously defined the minimum activities and maximum intervals necessary to implement an effective PSMP, and presented advanced strategies for those entities who wish to utilize them.**	
Indianapolis Power & Light Co.	Performing some of the maintenance activities may cause conflict with regional ISOs and their safe operation of the BES
Response: The SDT thanks you for your comments. To minimize system impact of such maintenance, the maintenance necessarily should be scheduled at a time that minimizes the risks.	
Northeast Power Coordinating Council	Yes--NPCC Directory #3, NPCC Key Facility Maintenance Tables. All areas must implement changes at the same time.
Response: The SDT thanks you for your comments. PRC-005-2 is a NERC standard and as such it will have its own implementation plan. PRC-005-2 when implemented will be an ERO-wide standard which establishes minimum requirements; to the degree that these requirements are more stringent than those currently imposed by any individual Regional Entity, the NERC requirements will govern. Any individual Regional Entity can establish MORE stringent requirements.	
Puget Sound Energy	PRC-STD-005 PRC-005-2 requires a Protection System Maintenance Program (PSMP) while PRC-STD-005 requires a Transmission Maintenance and Inspection Plan (TMIP). Historically the requirements of PRC-005-1 and PRC-STD-005 folded nicely into one consistent plan. Could the maximum intervals identified in PRC-005-2 be expected or audited against under PRC-STD-005 where it does not indicated that much specificity? PRC-STD-005 requires maintenance of lines and breakers over and above what PRC-005-2 the expectations relative to breakers should align.
Response: The SDT thanks you for your comments. An entity can be audited to both NERC Reliability Standards and to Regional Standards, provided that both are mandatory and enforceable. Where applicable, Regional Standards will have more stringent requirements. As for intervals, where different intervals apply to the same piece of equipment, the more stringent intervals apply. Also, the NERC intervals would apply only to the equipment	

Organization	Question 8 Comment
	associated with those intervals within the NERC Standard. If the Regional requirements address equipment not addressed within the NERC Standard, only the Regional requirements are relevant.

9. If you are aware of the need for a regional variance or business practice that we should consider with this project, please identify it here.

Summary Consideration: A number of respondents suggested that the standard should allow "grace periods" to defer maintenance because of a variety of expected difficulties in completing the required activities within the established intervals. The SDT consistently responded that a "grace period" would be contrary to a measurable standard, and that entities should manage their programs to assure that the required activities are completed on schedule.

Organization	Regional Variance or Business Practice	Question 9 Comment
TVA	Business Practice	Allow for deferrals to coordinate with generator outages.
Response: The SDT thanks you for your comments. The SDT considered this issue when developing the intervals, and realizes that some entities may need to perform certain maintenance activities more frequently to assure that the activities are performed within the required intervals. Specifically, for generation facilities, there would seem to be numerous opportunities within the 6-year or longer intervals to perform the required maintenance during a scheduled plant outage, and maintenance with shorter intervals can be characterized as non-intrusive maintenance, more of an inspection than anything else; the SDT believes that this maintenance can be done on-line. The SDT is concerned that a "grace period", if permitted, would be used to establish a de-facto longer interval, and that the established intervals would thus not be measurable. Additionally, FERC Order 693 directed that NERC establish maximum maintenance intervals, and allowing for a "grace period" would not conform to this directive. Please refer to Section 8 of the Supplementary Reference Document (page 9) for a discussion on this issue.		
Exelon Generation Company, LLC	Business Practice	Business Practice: Nuclear Electric Insurance Limited (NEIL) variance allowance.
Response: The SDT thanks you for your comments. The SDT considered this issue when developing the intervals, and realizes that some entities may need to perform certain maintenance activities more frequently to assure that the activities are performed within the required intervals. Specifically, for generation facilities, there would seem to be numerous opportunities within the 6-year or longer intervals to perform the required maintenance during a scheduled plant outage, and maintenance with shorter intervals can be characterized as non-intrusive maintenance, more of an inspection than anything else; the SDT believes that this maintenance can be done on-line. The SDT is concerned that a "grace period", if permitted, would be used to establish a de-facto longer interval, and that the established intervals would thus not be measurable. Additionally, FERC Order 693 directed that NERC establish maximum maintenance intervals, and allowing for a "grace period" would not conform to this directive. Please refer to Section 8 of the Supplementary Reference Document (page 9) for a discussion on this issue.		
ITC Holdings		Comment: We are not aware of any regional variance or business practice that should be considered

Organization	Regional Variance or Business Practice	Question 9 Comment
		with this project.
Response: The SDT thanks you for your comment.		
Green Country Energy LLC	Business Practice	Contractual commitments existing prior to NERC stds make it difficult to comply with some of the maintenance activities.
Response: The SDT thanks you for your comment. Existing contracts may need to be adjusted to accommodate compliance to NERC standards.		
City Utilities of Springfield, MO		CU is not aware of a need for a regional variance.
Response: The SDT thanks you for your comment.		
Florida Municipal Power Agency, and its Member Cities		FMPA is not aware of a need for a regional variance
Response: The SDT thanks you for your comment.		
Electric Market Policy	Regional Variance	1. It is our understanding that once Project 2009-17: "Interpretation of PRC-004-1 and PRC-005-1 for Y-W Electric and Tri-State" is approved, that the definition of a "Transmission Protection System" would be included within PRC-005-2 or included within the NERC Glossary of Terms. However, the specific protection that would be considered part of the "Transmission Protection System" would also depend on the regional definition of the BES. 2. We suggest that the regions develop a supplement that provides further clarification on what constitutes a "Transmission Protection System" given the regional definition of the BES.
Response: The SDT thanks you for your comments. **1. The 2009-17 interpretation addresses PRC-005-1. The SDT will monitor this interpretation to determine if any changes need to be made to PRC-005-2 in response to this interpretation. In general, a definition cannot be established via the Interpretation process, but only through the comprehensive Standards Development process.** **2. You should present this concern to your region.**		
SERC (PCS)	Regional Variance	1, It is our understanding that once Project 2009-17: "Interpretation of PRC-004-1 and PRC-005-1 for

Organization	Regional Variance or Business Practice	Question 9 Comment
		Y-W Electric and Tri-State" is approved, that the definition of a "Transmission Protection System" would be included within PRC-005-2 or included within the NERC Glossary of Terms. However, the specific protection that would be considered part of the "Transmission Protection System" would also depend on the regional definition of the BES. 2. We suggest that the regions develop a supplement that provides further clarification on what constitutes a "Transmission Protection System" given the regional definition of the BES.
Response: The SDT thanks you for your comments. **1. The 2009-17 interpretation addresses PRC-005-1. The SDT will monitor this interpretation to determine if any changes need to be made to PRC-005-2 in response to this interpretation. In general, a definition cannot be established via the Interpretation process, but only through the comprehensive Standards Development process.** **2. You should present this concern to your region.**		
American Transmission Company	Business Practice	Jointly-owned facilities should be a component of this standard. Comments: ATC shares services at Substations; consider dividing the services, i.e. batteries and PTs.
Response: The SDT thanks you for your comments. This is a registration issue and it's not within the scope of the SDT. If a company owns a facility that meets the applicability section as described in this standard then it is responsible for the maintenance activities as described in this standard.		
Ontario Power Generation	Regional Variance	Maintenance activities, and especially intervals, prescribed in NPCC Directory 3 (Maintenance Criteria for BPS Protection) often differ from those in PRC 005 - 02. We recommend that NPCC aligns Directory #3 with PRC 005 - 02 as much as possible. Technical justification should be provided for any variance.
Response: The SDT thanks you for your comments. Any Regional Entity may develop its own requirements, as long as they are not less stringent than the NERC requirements. **The SDT suggests that the commenter communicate with the NPCC regional staff regarding this concern.**		
AEP		No none regional or business practice variances known.
Nebraska Public Power District		None
PacifiCorp		None known.

Organization	Regional Variance or Business Practice	Question 9 Comment
Georgia System Operations Corporation		None.
Operations and Maintenance		None.
Northeast Power Coordinating Council		Not aware of any regional variance or business practice.
Response: The SDT thanks you for your comment.		
JEA	Regional Variance	Regional variances in the Bulk Electric System definition as applied across regions allows for PSMP to vary possibly even for the same region crossing tie lines. Also, accepted maintenance practices by one region vary from accepted maintenance practices from another region. In the case of lower kV non-redundant bus lockout protection systems, one region may allow for the protection system to be taken out of service to perform maintenance, while another region may specifically prohibit this practice (don't leave energized equipment protected by delayed clearing, etc.)
Response: The SDT thanks you for your comment.		
Duke Energy	Regional Variance	Regions with ISO's and RTO's - Where the independent system operator (ISO) is not the same company as the entity doing testing and maintenance, the independent system operator could prevent the entity from performing scheduled maintenance and testing due to outage request constraints. There should be no violation in such a situation, and the maintenance and testing just rescheduled.
Response: The SDT thanks you for your comments. **The SDT considered this issue when developing the intervals, and realizes that some entities may need to perform certain maintenance activities more frequently to assure that the activities are performed within the required intervals. The SDT is concerned that a "grace period", if permitted, would be used to establish a de-facto longer interval, and that the established intervals would thus not be measurable. Additionally, FERC Order 693 directed that NERC establish maximum maintenance intervals, and allowing for a "grace period" would not conform to this directive. Please refer to Section 8 (page 9) of the Supplementary Reference Document for a discussion on this issue.**		
Wisconsin Electric	Regional Variance	See above Question 2, Item 7: There needs to be some recognition that Protection System's applied on distribution-voltage systems may be included in a regional definition of a BES Protection System. These systems are not designed or operated in the same way as Transmission or Generation

Organization	Regional Variance or Business Practice	Question 9 Comment
		Protection Systems. Therefore, it is reasonable that these systems be subject to less rigorous requirements.
Response: The SDT thanks you for your comments. See our response above to Question #2, item 7.		

10. If you have any other comments on this standard that you have not already provided in response to the prior questions, please provide them here.

Summary Consideration: This question generated numerous comments and many respondents repeated comments offered earlier in the document. Several of the respondents objected to the establishment of maximum allowable intervals at all, and suggested that it should be left to the entities to establish their own intervals; the SDT explained that this would be directly contrary to FERC directives related to the four current standards which are being addressed within this project. Additional technical comments covered the full spectrum of the material in the standard and associated reference documents, and resulted in extensive changes to the standard and in changes to both the Supplementary Reference (mostly to correct inconsistencies) and to the FAQ (including addition of many additional topics). There was also concern about the documentation necessary to demonstrate compliance.

Organization	Question 10 Comment
Ameren	1) Documentation could be a monumental task. Although FAQ 1B allows a comprehensive set of forms of documentation, a very large number of people are involved across this set at most utilities. Producing a particular needle in the haystack may take longer than an auditor would expect. Inspection forms can be structured to capture abnormal conditions, and thus normal conditions are not recorded. Some items, like the red light monitoring a trip coil, may only be reported by exception (i.e., "red light out, replaced bulb" but if the red light is on an operator may not report that). 2) We presume that the SDT would expect transmission facilities to be switched out of service if maintenance would result in those facilities being unprotected. We think this should be stated or clarified, as there may be entities that still use differential cutoff switches or other means of disabling protection for testing and have not considered the consequences of a concurrent fault.
Response: The SDT thanks you for your comments. **1. Much of your concern can be addressed within your program by careful design of your maintenance tracking forms and systems. In your example of a red light, your maintenance can include documentation forms that require completion of either of multiple choices (e.g., OK, Not OK with resolution, etc).** **2. This consideration relates to general planning, design, and operational issues, and is outside the scope of this standard. Various other NERC standards apply.**	
Public Service Enterprise Group Companies	1) R4 requires all maintenance correctable issues identified as part of a time based maintenance plan to be resolved in that same maintenance period. This places a burden on some items (for example, 3 month battery inspections) to achieve adequate resolution for problems that are not an immediate threat. For example, if a battery with a somewhat out of allowable range specific gravity is found near the end of the maintenance period, scheduling and performing the work to replace the battery could reasonably extend somewhat beyond the end of maintenance period. PSE&G requests that the drafting team revisit this

Organization	Question 10 Comment
	requirement and allow flexibility for corrections to be made within a specified reasonable timeframe when correctible issues are identified that for practical reasons require extension for work completion beyond the end of the current maintenance interval. 2) Section 4.2.5.5 of the standard should define provide an example that just the transformer connected to the BES is included and specifically exclude connected equipment beyond the LV terminals. 3) Draft implementation plan for requirements R2, R3 & R4 discusses table 1a as basis, should also address tables 1b and 1c.
Response: The SDT thanks you for your comments. **1. Requirement R4, Part4.3 has been added to the standard in consideration of your comments. It reads as follows:** R4. Each Transmission Owner, Generator Owner, and Distribution Provider shall implement its PSMP, including identification of the resolution of all maintenance correctable issues[2] as follows: *[Violation Risk Factor: Medium] [Time Horizon: Long Term Planning]* 4.3 Assure either that the components are within acceptable parameters at the conclusion of the maintenance activities or initiate any necessary activities to correct unresolved maintenance correctable issues[3]. **2. The SDT disagrees with your comment. For example, current transformers on low-voltage transformer bushings or low-voltage breakers, which are associated with differential relays, must be considered within application of PRC-005-2. See Figure 2 in the Supplemental Reference Document (page 28) for an illustration.** **3. The SDT believes that the implementation period for PRC-005-2 must be kept as brief as possible; until PRC-005-2 is fully implemented, entities will have to be compliant with PRC-005-2 for those components for which implementation has been completed, and with PRC-005-1 for all other components. However, entities may need considerable time to become compliant with the more specific requirements of PRC-005-2. An implementation period based on Table 1a seems to be the best compromise period to achieve this. Additionally, the Implementation Plan does not require that entities adopt the Table 1a activities and intervals, but instead just refers to the Table 1a components and their intervals for establishment of a phased implementation.**	
Wisconsin Electric	1. In the definition of a Protection System Maintenance Program, the statement is made that "A maintenance program CAN include..." with a list of seven attributes following. Is it the intent that the PSMP "SHALL include one or more of the following"? What is to prevent Compliance staff from concluding that all seven of these attributes MUST be included in the PSMP? 2. The standard should more clearly describe what is meant by "verify..." when used in a Maintenance Activity description. Does

[2] A maintenance correctable issue is a failure of a device to operate within design parameters that can not be restored to functional order by repair or calibration while performing the initial on-site maintenance activity, and that requires follow-up corrective action

[3] A maintenance correctable issue is a failure of a device to operate within design parameters that can not be restored to functional order by repair or calibration while performing the initial on-site maintenance activity and that requires follow-up corrective action.

Organization	Question 10 Comment
	this require actual paper or electronic documentation? If so, then this should be explicitly stated in the Maintenance Activity description. We maintain above that the recurring and routine maintenance activities having a 3 month interval should be revised to use alternate words such as "Check" or "Observe". For example, "Check the continuity of the breaker trip circuit...", or "Observe the voltage of the station battery". This activity should not be required to have paper or electronic documentation or evidence. It should be sufficient to have these activities included in the PSMP. 3. It is stated in the Supplementary Reference that actual event data from fault records may be used to satisfy certain Maintenance Activities, yet the standard itself does not appear to allow for this. Will such evidence be accepted by Compliance staff?
Response: The SDT thanks you for your comments. **1. Yes, a PSMP should include one or more of the listed activities for any specific component. The definition is intended to identify the possible attributes of a PSMP. Only those attributes relevant to a specific program and component need be included in the PSMP for that component. The proposed definition includes the following phrase, making it clear that the PSMP does not have to include all listed items,** "A maintenance program for a specific component includes one or more of the following activities:" **2. The SDT thanks you for your comments and has modified the standard in consideration of your comments.** **3. It is difficult to predict what will be accepted by Compliance staff; the SDT believes that you will need to establish a method to capture the evidentiary data from fault records (such as what is empirically verified, when, and how) within your maintenance records. See FAQ IV-1-B (page 21), FAQ II-3-B (page 9) and Section 11 (page 18) of the Supplemental Reference Document.**	
Bonneville Power Administration	1. Tables 1a, 1b, and 1c were cumbersome to use because we found ourselves flipping back and forth to compare the requirements for the different levels of monitoring. Also, in some cases, the types of components were slightly different between the tables, which created confusion. We believe that it would be much easier to decipher a single table that listed each type of component only once and showed the requirements and maintenance intervals for the different levels of monitoring on a single page. Even if it took an entire page for each component, it would be very useful to see all of the options for that component without having to flip back and forth between tables. 2. Please clarify the requirements for trip coils. Table 1a has as a component type "breaker trip coil only", with a maximum maintenance interval of 3 months, while Table 1b has as a component type "trip coils and auxiliary relays". Table 1b say that there are no monitoring attributes for this component and to use the level 1 intervals, but then gives a maximum maintenance interval of 6 years, which doesn't agree with the 3 month interval given in Table 1a. 3. The terminology used to describe the secondary currents and voltages provided to the relay is confusing. Under the modified definition of a protection system, it includes the term "voltage and current sensing inputs to protective relays", and in the tables it uses the term "current and voltage circuit inputs". These terms, especially the use of the word input, give the impression that the actual input circuitry of the protective relay is what is being described, but we believe that these terms are really meant to describe the secondary currents and voltages from the instrument transformers (or other devices). BPA suggests revising the terminology

Organization	Question 10 Comment
	to describe the secondary currents and voltages. For example, in the maintenance activities section of the tables, you could say, "Verify that the secondary current and voltages provided to the relay are correct". 4. There is no mention to what the thresholds are when performing these maintenance activities or what corrective actions must take place and by when they need to be carried out. Is this something we should expect to see soon? 5. The need to measure the cell/unit internal ohmic value every 18 months can be argued. BPA's Substation Maintenance crew performs these measurements once every 24 months and with the Operators monthly inspections, we have been able to effectively catch any problems before a severe event/failure. 6. Communications: It is not clear specifically what equipment is included in "communications". The test interval of 12 years in table 1b is too long to verify continued proper operation of transfer trip tone equipment. Monitoring the presence of the channel does not provide any indication of whether the equipment can initiate a trip. Consequently, a required minimum interval of 12 calendar years is too long and does not do anything to verify proper communications support of the relay scheme. A shorter interval of 6 years, such as that in table 1a makes more sense from a functionality standpoint.
Response: The SDT thanks you for your comments. **1. The SDT has experimented with various arrangements of the Tables with some input from external parties, and feels that the presentation shown in the standard is the best way to present this complex information. To the degree possible, the SDT has attempted to make the arrangement of the three tables as similar as possible to address your concern.** **2. The cited sections of Table 1a, Table 1b, and Table 1c have been extensively revised.** **3. The SDT modified the standard to address your comments by revising the description of these components within the tables and by modifying the Protection System definition.** **4. Note 1 to Table 1a, Table 1b, and Table 1c specify, "adjustment is required to bring measurement accuracy within parameters established by the asset owner based on the specific application of the component." Clause R4.3 has been added to the standard to require that the entity "initiate any necessary activities to correct unresolved maintenance correctible issue." Because corrective actions will vary widely in type and scope, it is difficult to specify when it must take place; simple corrective actions may occur rapidly, but highly involved actions may take an extended period to complete.** **5. Thank you for your comments concerning the evaluation of cell/unit internal ohmic values to the station base line at the Maximum Maintenance Interval in Table 1. Because trending is an important element of ohmic measurement evaluation, the SDT believes that extending the Maximum Maintenance Interval listed in Table 1 for evaluating internal ohmic values would not provide the necessary information for proper evaluation of the ability of the station battery to perform as designed.** **6. The SDT has defined the minimum activities and the maximum intervals necessary to implement an effective PSMP. Some entities may feel that they need to maintain Protective System components more frequently.**	
Exelon Generation Company,	1. Battery testing should be added to Table 1c for Station dc supply (that uses a battery and charger)

Organization	Question 10 Comment
LLC	2. Table 1c Condition based maintenance. Consider adding Battery Capacity Test on a 6-year interval regardless of other condition based maintenance performed. 3. Evaluating the measured cell/unit internal ohmic values to station battery baseline does not provide an evaluation of battery capacity please explain rational for maintenance activity. 4. If the Table 1a maintenance interval is reached and the entity is unable to perform the maintenance task, is it acceptable to install temporary external monitoring or other measures to defer the maintenance to Table 1b or Table 1c interval? Is it acceptable in Table 1b to substitute additional or augmented maintenance activities or operator rounds to extend intervals? 5. Table 1c for equipment with "continuous monitoring" states the maximum maintenance interval of "continuous" this does not seem correct wording consider revising to state "not required." 6. The NERC standard should be revised to include a specific allowance for a deferral or variances of a maintenance activity based on a formal technical evaluation. Nuclear generating units allow for deferrals and/or variances on certain equipment based on emergent conditions that would prevent safe isolation and/or testing of function. It should be noted that any deferrals and/or variances if justified are to be based on a formal evaluation and not based on work management or resource issues. 7. The maintenance intervals and maintenance activities should be referenced directly to a basis document to ensure guidelines have a specific technical basis (e.g., IEEE-450).

Response: The SDT thanks you for your comments.

1. The SDT has modified the standard in consideration of your comments concerning Table 1c. Within Draft 2 of the standard, testing of the battery is not required if all performance attributes of the battery are monitored.

2. The SDT has modified the standard in consideration of your comments concerning Table 1c and the need for testing to verify that the battery can perform as designed.

3. The SDT believes that this Maintenance Activity is a viable alternative that a Vented Lead-Acid or Valve-Regulated Lead Acid battery owner can perform at the Maximum Maintenance Interval of Table 1 in place of conducting a capacity test. See FAQ II-5-F (page 14) and FAQ II-5-G (page 14).

4. R2 of the standard establishes that the entity "ensure the components to which the condition-based criteria are applied (as specified in Tables 1b or 1c), possess the necessary monitoring attributes." It appears irrelevant as to when the monitoring system is installed within the Table 1a monitoring interval, as long as the monitoring satisfies the attributes established in Table 1b or Table 1c as appropriate. If operator rounds, etc, are performed to the intervals established within the Table 1b general requirements, address the monitoring attributes specified within the Table, and are appropriately documented, they meet the requirements. However, it seems to the SDT that any temporary monitoring, etc, will have to be in place BEFORE you are overdue on maintenance and therefore out of compliance.

5. The Maintenance Activities describe that maintenance is actually being performed continuously via the monitoring system. Stating "continuous" for the interval provides a valuable link to FERC Order 693, which directs NERC to establish maximum maintenance intervals.

Organization	Question 10 Comment
6. The SDT considered this issue when developing the intervals, and realizes that some entities may need to perform certain maintenance activities more frequently to assure that the activities are performed within the required intervals. Specifically, for generation facilities, there would seem to be numerous opportunities within the 6-year or longer intervals to perform the required maintenance during a scheduled plant outage, and maintenance with shorter intervals can be characterized as non-intrusive maintenance, more of an inspection than anything else; the SDT believes that this maintenance can be done on-line. The SDT is concerned that a "grace period", if permitted, would be used to establish a de-facto longer interval, and that the established intervals would thus not be measurable. Additionally, FERC Order 693 directed that NERC establish maximum maintenance intervals, and allowing for a "grace period" would not conform to this directive. Please refer to Section 8 of the Supplementary Reference Document (page 9) for a discussion on this issue. **7. IEEE Standards are voluntary unless they are adopted by an "authority having jurisdiction', thus the IEEE Standards could be adopted here in their entirety. However, they would require consistent and continual review by NERC to assure that they are, and continue to be, relevant. The SDT elected instead to use them as a source of material, and to include the relevant required tests within the NERC Standard.**	
FirstEnergy	1. BES reclosing schemes were recently questioned in a PRC-005-1 interpretation but there is no mention of reclosing schemes in the draft standard. This interpretation should be integrated into the requirements of PRC-005-2. 2. Lack of Exception Process - The standard as written does not reflect the fact that any one group, such as a TO performing maintenance on a BES, does not have full control over when an outage can be taken to perform maintenance activities. Especially regarding functional testing, where the equipment needs to be exercised resulting in some BES components being de-energized, it can be very difficult in certain parts of the T&D system to obtain the necessary outage to complete these tasks. Even with proper planning, changes in system conditions and unforeseen equipment problems in other areas can impact the ability to schedule an equipment outage appropriately. Accordingly, a TO can be penalized for not completing prescribed maintenance within prescribed limits due to factors outside of their control. This type of scenario has already been experienced where maintenance activities are scheduled upwards of a year in advance, and then inclement weather or system conditions outside of a TO's service territory (e.g. unanticipated generating unit shutdown) prevent the work from taking place. 3. The standard should provide some specific guidance to allow relief for such situations, or that properly incents or even requires independent system operators (ISOs) and other outside groups to also ensure maintenance is completed within prescribed intervals. If a TO properly considers factors such as weather (not scheduling critical outage during middle of summer), resource commitment, schedule (the requested outage window is at least one year before maximum interval is met), time of day (performing work during afterhours period when load is down) etc. then if outages are still denied, that the TO is not penalized for being out of compliance as maximum intervals are exceeded. This suggested "exception process" should provide requirements for all parties involved, both those performing the maintenance as well as those controlling and overseeing the system. There should be required documentation to prove that the parties on both sides made proper efforts to complete the required maintenance, as well as discuss conflict resolution. 4. With regard to the phrase "including identification of the resolution of all maintenance correctible issues" in Req. R4, we feel that this requirement should be a subset of R4 since it is part of the implementation of the PSMP. We suggest removing the phrase from the main requirement of R4 and creating a new 4.3 as follows:"4.3. For all maintenance programs, identify resolutions for all encountered maintenance correctible issues and take corrective action within a time period suitable for maintaining reliability

Organization	Question 10 Comment
	of the affected protection system." 5. With regard to the proposed modification of "Protection System", we suggest adding the word "devices" after "voltage and current sensing". This would also match what appears to be the SDT's intended wording as shown in the Supplementary Reference Document sec. 2.2. Also, we suggest modifications to the proposed definition to add clarity to the types of communications system protection and the voltage and current sensing devices. The following is our suggestion for wording of the definition:"Protective relays, communication systems used in communications aided (or pilot) protection, voltage and current sensing devices and their secondary circuits to protective relays, station DC supply, and DC control circuitry from the station DC supply through the trip coil(s) of the circuit breakers or other interrupting devices." 6. Protection System Communication Equipment and Channels - Some power line carrier equipment has automatic testing and remote alarming and some that does not. For other relay communication schemes (e.g., tone transfer trip ckts), if the circuit travels over our private communications network (fiber or microwave radio), the communication equipment is remotely monitored/alarmed. In other cases it is not remote monitored. We ask for clarification as follows: As part of our maintenance program, we check that signal level, reflected power, and data error rate are all within tolerance at the interface between the end equipment and the communication link. Our question is: Does this meet the intent of the proposed requirements in PRC-005-2 for maintenance activities for Protection System Communication Equipment and Channels? Or do the requirements ask for something beyond this? 7. We suggest combining 4.2.2, 4.2.3 and 4.2.4 to read as a new 4.2.2 "Protection System components which are installed as an underfrequency load shedding, under voltage load shedding or Special Protection System for BES reliability."

Response: The SDT thanks you for your comments.

1. The SDT is required to include/adopt material from approved interpretations within the standard. In the case of reclosing relays, the referenced interpretation stated that reclosing relays are NOT included, and the draft standard excludes them.

2. The SDT considered this issue when developing the intervals, and realizes that some entities may need to perform certain maintenance activities more frequently to assure that the activities are performed within the required intervals. The SDT is concerned that a "grace period", if permitted, would be used to establish a de-facto longer interval, and that the established intervals would thus not be measurable. Additionally, FERC Order 693 directed that NERC establish maximum maintenance intervals, and allowing for a "grace period" would not conform to this directive. Please refer to Section 8 of the Supplementary Reference Document (page 9) for a discussion on this issue.

3. The SDT considered this issue when developing the intervals, and realizes that some entities may need to perform certain maintenance activities more frequently to assure that the activities are performed within the required intervals. The SDT is concerned that a "grace period", if permitted, would be used to establish a de-facto longer interval, and that the established intervals would thus not be measurable. Additionally, FERC Order 693 directed that NERC establish maximum maintenance intervals, and allowing for a "grace period" would not conform to this directive. Please refer to Section 8 (page 9) of the Supplementary Reference Document for a discussion on this issue

4. The SDT has modified the standard in consideration of your comment. Requirement R4, Part 4.3 was added and now reads: Assure either that the

Organization	Question 10 Comment
components are within acceptable parameters at the conclusion of the maintenance activities or initiate any necessary activities to correct unresolved maintenance correctable issues[4]. **5. The SDT believes that your suggestions regarding the Protection System definition may address predominant current technology relatively accurately, but may be constraining with regards to emerging technologies.** **6. If there is remote monitoring of the Channel, then Level 2 requirements indicate a 12 calendar year interval for the tests you describe. If the system is unmonitored a manual check back or a check of the automated check back is required at a 3 month interval. Unmonitored systems would also have the signal level, reflected power and data error rate check done on a 6 year interval.** **7. The SDT elected to list these components within separate subrequirements in order to maintain linkage to the legacy PRC-008, PRC-011, and PRC-017 standards. Your suggestion may be better adopted in a future revision of this standard (following approval of PRC-005-2).**	
Dynegy	1. The proposed definition of Protection System needs further clarification. Suggest changing wording around DC supply to read as follows: "...and DC control circuitry associated with protective devices from the station DC supply". 2. Suggest revising Section 4.2 to separate time based program as its own item under R4.3. 3. Change title on Table 1a to clarify level 1 monitoring as time based.
Response: The SDT thanks you for your comments. **1. The SDT has modified the standard in consideration of your comment. The following phrase was added to the definition:** and associated circuitry from the voltage and current sensing devices **2. R4.1 currently addresses implementation of maintenance programs per Table 1a, Table 1b, and Table 1c as different "flavors" of a time-based program, depending on the degree of monitoring present for the various components. The SDT feels that this is the correct approach. R4.2 specifically addresses performance-based maintenance, and does not seem relevant to the text of your comment.** **3. The SDT has modified the standard in consideration of your comment and added "Time-based" to the title of Table 1a.**	
MRO NERC Standards Review Subcommittee	A. In the applicability section 4.2.5.5, change the statement to say, "Protection systems for BES connected station-service transformers for generators that are part of the BES." B. In the applicability section 4.2.5, change the statement to replace "are part of" with "directly connected to". The "are part of" will be left to interpretation. Please indicate the added reliability benefit by collecting this in Table 1a Page 9 protection system

[4] A maintenance correctable issue is a failure of a device to operate within design parameters that can not be restored to functional order by repair or calibration while performing the initial on-site maintenance activity and that requires follow-up corrective action.

Organization	Question 10 Comment
	communication equipment and channels. C. If a breaker failure relay is also being used for sync-check, is it required to verify the voltage inputs since they are used for a closing function and not a tripping function? It is understood that the current inputs would have to be verified since these are used for breaker failure tripping. D. Please clarify requirement R1-1.1, does one have to individually list out each Protection System and its associated maintenance activities or can the PSMP be a generalized procedure that covers each of the components in all of a utility's Protection Systems? E. All references to breakers should be eliminated; thus, eliminate breaker trip coils. Breakers are primarily mechanical in nature and should be excluded similar to mechanical relay systems such as sudden pressure relays. F. Clarify that trip coils checks or tests can be verified through alternate means other than physically tripping the coil or potentially requiring system outages to physically trip a coil. Alternate tests could consist of checking self monitoring relays, continuity lights, etc. Trip coil tests could require transmission line outages which can be denied by regulatory authorities due to system conditions beyond an entity's control. Significant delays of months or longer could occur to obtain a transmission line outage. Further, potentially requiring transmission line outages for trip coil test could harm BES reliability by increase the number of force transmission line outages due to testing. System reliability could be significantly negatively impacted anytime testing on trip circuits is performed due to human errors causing outages or regional disturbances. G. One item R1.3 (inclusion of batteries) was questioned as why this was specifically called out. It should be part of the definition. H. Define the term "condition-based". I. The format of the tables is poor with 17 line items addressed in each. It is difficult to relate one table to another because they are not consistent with regard to the type of components. For example table 1a references of components a "breaker trip coil (only)" and the 1b references "trip coils and auxiliary relays". J. R1.1 please add "as they apply to the applicable entity". As stated now, all three tables must be accomplished. K. Please add the words "time based maintenance methods" to table 1a for clarity in the heading. L. Table 1b under general description, last sentence the word "elements" should be replaced with "maintenance activities" which will provide exactly what is intended. M. Table 1b, if maintenance activities for level 2 monitoring include level 1 maintenance activities, then redundant activities in table 2 that are contained in table 1 should be removed (the same for table 3 to table 2 to table 1). N. If an entity maintenances a protective relay such that it is included in level 2 monitoring (a Condition Based Maintenance program) and this relay is considered to have a maximum interval of 12 years, does the entity need to also perform the maintenance activities for level 1 monitoring since the table 1b header indicates, "General Description: Protection System components whose alarms are automatically provided daily (or more frequently) to a location where action can be taken for

Organization	Question 10 Comment
	alarmed failures. Monitoring includes all elements of level 1 monitoring with additional monitoring attributes as listed below for the individual type of component"?

Response: The SDT thanks you for your comments.

A. The station-service transformer impacts proper operation of the BES generator, whether the station service transformer is connected to the BES (for example, at 138 kV) or not (for example, connected at 46 kV). (See FAQ III-2-A, page 20)

B. This suggestion may actually bring a small, non-BES, generator facility that is connected to the BES into scope. For example, if a Region specifies that any generator greater than 20 MVA connected at 100 kV or above is BES, your suggestion would bring a 10 MVA generator (similarly connected) into scope. Clause 4.2.5 currently limits applicability to BES generators.

C. No. The maintenance activities for this component have been modified to clarify.

D. The entity may use whatever method it wishes, but the documentation of the program and the implementation of the program needs to be adequate to satisfy the Compliance Enforcement Authority that the program meets the requirements of the standard. Please be advised that all requirements of the standard must be met, including that the relevant activities in the Tables are performed.

E. The SDT believes that the breaker trip coils are a vital electrically-operated component of the DC control circuit, and they therefore must be included. For testing the breaker trip coil, the breaker must be observed to trip; however, such additional testing such as travel recorder, breaker timing, etc need not be performed to satisfy PRC-005.

F. The SDT considers that the electro-mechanical devices (trip coils, aux relay coils, etc) need to be periodically exercised to assure that they operate properly. Much of the rest of the control circuit can be verified by monitoring, including continuity of the coils, but this doesn't assure operating integrity of these devices. An entity is necessarily obligated to manage its maintenance program to complete the necessary activities on time, and various other NERC standards address the management of risk related to planned outages.

G. In the Protection System Maintenance – Frequently Asked Questions (FAQ) document (FAQ IV-3-G, page 26.) and Supplementary Reference Document Section 15.4 (page 23), the Drafting Team explains why batteries are excluded from PBM and the standard should include all batteries associated with a Protection System in a time-based program.

H. The SDT declines to introduce a defined term for this. Table 1b and Table 1c identify condition-based maintenance to include consideration of the known condition of the component within condition-based maintenance. The Supplemental Reference Document (Section 6, page 8) and the FAQ (V-3, page 38 and V-4, page 39) also describe condition-based maintenance considerations.

I. The SDT has modified to Tables to make them more consistent with each other.

J. The SDT has modified the standard in consideration of your comment. The original Pwas replaced with a new Part 1.1 and a new Part 1.3 was added as shown below,

1.1. Identify all Protection System components.

1.3 For each Protection System component, include all maintenance activities specified in Tables 1a, 1b, or 1c associated with the maintenance method used

Organization	Question 10 Comment
	per Requirement 1, Part 1.2. **K. The SDT has modified the standard in consideration of your comment - and added "Time-based" to the title of Table 1a.** **L. The SDT has modified the standard in consideration of your comment. The revised language does not use the word, "elements" – it reads:** **M. The SDT disagrees. Repeating the activities in Table 1b or Table 1c allows the entity to not refer back to the previous table.** **N. If an entity decides to implement Table 1b for qualified components, the activities in Table 1b supersede the comparable activities in Table 1a. Requirement R1 has been modified to clarify.**
CenterPoint Energy	a. CenterPoint Energy believes the existing maintenance standards are preferable to the approach embodied in this proposal. However, if most entities agree with the SDT's approach, CenterPoint Energy recommends deleting Under-Frequency Load Shedding (UFLS) and Under-Voltage Load Shedding (UVLS) system equipment from the scope of this proposal because the performance requirements for UVLS and UFLS are substantially different from transmission and generation protection schemes. Few would argue that protection schemes that clear faults on the Bulk Electric System must be very reliable, much more reliable than schemes that shed distribution load for under-voltage or under-frequency situations. If an entity plans to shed a contemplated level of load for a contemplated set of circumstances based upon planning simulations, that plan would translate into a certain number of distribution feeders that are reasonably predicted to shed a load amount that is reasonably close, but not exactly equal (unless by chance) to the contemplated amount of load shed. For example, if a certain number of distribution circuits equals 10% of the entity's load during one time (such as system peak), that same amount of distribution circuits will almost certainly equal a different percentage of the entity's load at other times. So, if hypothetically 100 distribution circuits are armed with UVLS or UFLS relays set a given trip point, the actual percentage of load that will be shed will vary under different system conditions. Therefore, if 95 of the distribution circuits actually trip on one occasion and 98 trip on another occasion, the difference in system performance is immaterial because the exercise is not that precise, especially when planning simulation uncertainties are also introduced into the picture. For these reasons, CenterPoint Energy believes it is unreasonable to impose a high level of rigidity into load shedding schemes when the designs of the schemes inherently do not depend on such rigidity. If the SDT agrees, then the revised standard would not be applicable to Distribution Providers, and 4.1.3 can be deleted. b. CenterPoint Energy also disagrees with the proposed expansion of the Protection System definition. The present definition does not include trip coils; and correctly so, as trip coils are part of the circuit breaker. A protection system has correctly performed its function if it provides tripping voltage up to the breaker's trip coils. From that point, the breaker can fail to timely interrupt fault current due to several factors such as a binding mechanism that affects breaker clearing time, a broken pull rod, a bad insulating medium, or bad trip coils. Local breaker failure protection is installed to address the various possible causes of circuit breaker failure. Planning standard TPL-001 tables 1C and 1D specifically support the present definition, as Delayed Clearing is noted as due to "stuck breaker or protection system failure".
Response: The SDT thanks you for your comments.	

Organization	Question 10 Comment
a. The four legacy standards are combined here in response to several suggestions, including from FERC (in Order 693) because of substantial equipment similarities. For the reasons that you note, the activities specified for UFLS and UVLS protection are somewhat less comprehensive than those for fault protection. **b. The SDT contends that the trip coil itself is an integral and essential component of the station control circuitry, and it must be assured that the trip coil operates. The SDT has also been diligent in excluding any facets of the breaker mechanism from consideration, thereby excluding consideration of many of the failure types listed. Many breaker failure schemes are designed with the presumption that the trip coil is properly initiated, and are more focused on mechanism failures.**	
NextEra Energy Resources	a. The level of effort that will be required to be in compliance in accordance to PRC-005-2 is substantial. Also, it will be difficult to create one maintenance program for all NextEra Energy sites that establishes maintenance intervals based the implementation of a combination of the three allowable types of maintenance programs (time-based, condition based, and/or performance based maintenance). As a result, a high risk exists that something will be missed or carried out incorrectly. b. What is the implementation period? How will the standard be implemented in relation to the entity's maintenance scheduled in accordance with existing intervals specified in the current Protection System Maintenance and Testing Procedure that meets the requirements of PRC-005-1 but will exceed PRC-005-2's established maximum intervals? Once PRC-005-2 becomes mandatory, entities should not be required to re-do testing in accordance with the new intervals. Instead, entities should be allowed to implement the newly established intervals after the last known cycle. c. Protection System Maintenance Program (PSMP): (c1) The PSMP definition would be better defined if the first sentence was changed to "An ongoing program by which Protection System components are kept in working order and where malfunctioning components are restored to working order." (c2) Please clarify what is meant by "relevant" under the definition of Upkeep. Should "relevant" be changed to "necessary"? (c3) The definition of Restoration would also be more explicit if changed to:The actions to return malfunctioning components back to working order by calibration, repair or replacement. (c4) Please clarify the definition of Restoration. For example, if a direct transfer trip system has dual channels for extra security even though only one channel is required to protect the reliability of the BES and one channel fails, must both be restored to be compliant? d. Protection System (modification): (d1) Voltage and current sensing inputs to protective relays" should be changed to "voltage and current sensors for protective relays." Voltage and current sensors are components that produce voltage and current inputs to protective relays. (d2) "Auxiliary relays" should be changed to "auxiliary tripping relays" throughout PRC-005-2, FAQ and the Draft Supplementary Reference.

Organization	Question 10 Comment
	(d3) The word "proper" should be removed from the standard. It is ambiguous and should be replaced with a word or words that are clear and concise. e. Additionally, NextEra Energy concurs with the following comments made by other entities: (e1) PRC-005 Sect B (R2): More clarity needs to be provided. Does this requirement require the utility to document the capabilities of its various protection components to determine fully and partially monitored protection systems? If so the requirement for such documentation should be clearly spelled out. Usually each requirement has a measurement (of compliance) and I'm not clear how this will be done. (e2) PRC-005 Sect B (R4.1): A "grace period" similar to the NPCC Criteria should be considered in case it is not possible to obtain necessary outages.

Response: The SDT thanks you for your comments.

a. We agree that the effort may be substantial. However, the effort and compliance risk can be minimized by simply implementing Table 1a, together with R1 and R4.

b. A proposed Implementation Plan was posted with this draft of the standard, and will continue to be posted with future drafts (including ballot drafts when the standard reaches that stage). Please review the posted Implementation Plan.

c1. The SDT does not believe that the suggested change is substantive, and sees no reason to make it.

c2. Some updates may not affect the operation of the device as applied, and therefore are not relevant. "Necessary" would imply an additional level of review to determine whether the device would operate properly without the updates, while "relevant" simply implies that the update applies to the function.

c3. The SDT does not believe that the suggested change is substantive, and sees no reason to make it.

c4. The standard establishes that all components need to be fully maintained, and that they will function as designed. The SDT appreciates that some "restoration" activities may take an extended time to complete, but also contends that restoration to the designed condition is a vital element of maintenance.

d1. The SDT has modified the standard in consideration of your comments.

d2. "Auxiliary tripping relays" may exclude essential other internal Protection System functions. Therefore, the SDT declines to adopt this suggestion.

d3. "Proper", "working condition", "correct", etc, are all somewhat subjective terms that address the application-specific requirements related to the specific use. For example, one entity's design standards may require that an electromechanical relay be within a 2% tolerance of the ideal operating characteristics, while another may only require that it be within 5%. Each of these is proper, correct, etc, for the application.

e1. The requirement establishes that an entity be able to prove that the specified monitoring attributes are met. There may be many methods of documenting this – see Section 15.6 of the Supplemental Reference Document (page 24) which was posted with this standard. Measures, etc, will be included with the next posted draft of the standard.

Organization	Question 10 Comment
e2. The SDT is concerned that a "grace period", if permitted, would be used to establish a de-facto longer interval, and that the established intervals would thus not be measurable. Additionally, FERC Order 693 directed that NERC establish maximum maintenance intervals, and allowing for a "grace period" would not conform to this directive. Please refer to Section 8 of the Supplementary Reference Document for a discussion on this issue.	
City Utilities of Springfield, MO	As proposed, this standard is very long and complex. Additionally, in requirement R1, bullet 1.1 ought to state "For each component used in each Protection System, include all "applicable" maintenance activities specified in Tables 1a, 1b and 1c". For instance, if every component has continuous monitoring, why should the program include 1a and 1b?
Response: The SDT thanks you for your comments. The SDT has modified the standard in consideration of your comments. The original Part 1.1 was replaced with a new Part 1.1 and a new Part 1.3 was added as shown below, 1.1. Identify all Protection System components. 1.3 For each Protection System component, include all maintenance activities specified in Tables 1a, 1b, or 1c associated with the maintenance method used per Requirement 1, Part 1.2.	
Austin Energy	Austin Energy is meticulous in adhering to the current maintenance standard and is convinced that its current maintenance and documentation program is adequate to maintain its reliable electric power system. 1. Austin Energy appreciates the good intentions of the SDT but believes that the approach taken increases complexities to the maintenance process, introduces unwarranted workload in excessive documentation, is inflexible towards system configuration and experience, and is over prescriptive in nature. The approach also fails to distinguish the harmful effects of over-maintenance, increasing reliability risk due to human error and ultimately affecting the overall performance and reliability of the system. 2. Another concerning issue is the addition of the breaker trip coil to the protection system definition. Our position is that the trip coil should be part of the breaker. The protection system would be considered operating correctly if it provided the output signal for the trip coil when expected. Hence the trip coil should be excluded from the new protection system definition. 3. Performance based maintenance as specified in the attachment is extremely difficult and cumbersome to navigate. The intricate requirements are difficult to comprehend and will entrap entities making a good faith effort to comply. We believe this approach may become burdened with undesirable consequences. 4. Last but not least, Austin Energy believes that under-frequency load shedding (UFLS) and under-voltage load shedding (UVLS) systems should not be included in the scope of this new proposal. UFLS and UVLS are a wholly different entity as compared to the Bulk Electric System (BES). Rigidity imposed onto distribution system equipment, operating schemes and performance is uncalled for and overreaching.
Response: The SDT thanks you for your comments. **1. The SDT believes that the level of prescription within the standard is necessary to satisfy the guidance in FERC Order 693, and also to address**	

Organization	Question 10 Comment
observations from the Compliance Monitoring entities (the Regional Entities and NERC) that PRC-005-1 is excessively general. FERC Order 672 also specifies that NERC Standards should be clear and unambiguous. The SDT has therefore defined the minimum activities necessary to implement an effective PSMP. To minimize system impact of such maintenance and possible errors, the maintenance necessarily should be scheduled at a time that minimizes the risks. **2. The SDT contends that the trip coil itself is an integral and essential component of the station control circuitry and it must be assured that the trip coil operates. The SDT has also been diligent in excluding any facets of the breaker mechanism from consideration.** **3. If an entity considers that a PBM would be difficult to implement, they may choose to implement simple time-based maintenance (Table 1a) and/or condition-based maintenance (Tables 1b and Table 1c). This option is provided for those who elect to take advantage of the opportunities presented.** **4. The four legacy standards are combined here in response to several suggestions, including from FERC Order 693 because of substantial equipment similarities. The SDT disagrees that the requirements for UFLS and UVLS are "uncalled for and overreaching", and has specified less stringent requirements for these devices.**	
Progress Energy	Comments: 1- Requirement R4 "Each Transmission Owner, Generator Owner, and Distribution Provider shall implement its PSMP, including identification of the resolution of all maintenance correctible issues as follows: " Based on the definition provided (A maintenance correctable issue is a failure of a device to operate within design parameters that can be restored to functional order by calibration, repair or replacement.) Pr ogress Energy believes that this will become a potential tracking issue. To maintain all of the data required to meet this definition can be onerous. 2- The biggest concern with the proposed PRC is that for many entities, the proposed maintenance and intervals will greatly increase the entities workloads. There are not enough relay technicians available to handle this increased workload across the country. 3- The Implementation Plan for R2, R3, and R4 identified in the Draft Implementation Plan for PRC-005-02, dated July 21, 2009, is very reasonable. This plan recognizes that it is unrealistic to expect entities that are presently using intervals that exceed the maximum allowable intervals to immediately be in compliance with the new intervals. It allows implementation to be implemented across the maximum allowable interval. This is a reasonable approach for the following reasons: a. Sufficient resources are not available to perform the additional maintenance proposed on an accelerated basis. b. It allows the staggering of the PMs so that resource loading can be balanced. Without the ability to stagger the PMs, there would be an initial "bow-wave" of PMs and future "bow-waves" each time the interval is up. 4- The Implementation Plan for R1 identified in the Draft Implementation Plan for PRC-005-02, dated July 21, 2009, is not reasonable. The implementation plan requires entities to be 100% compliant three months following approval of the PRC. This is not a reasonable timeframe given the program changes required, including: a. A massive effort to review circuit schematics to determine whether equipment meets the definition of partial-monitored or

Organization	Question 10 Comment
	unmonitored. b. Many procedures, basis documents, and job plans will need to be revised or created. c. The work management tool will have to be modified to reflect the new intervals. 5- PRC-008-1 placed only the relays associated with UFLS in the compliance program. Contrary to PRC-008-1, the draft PRC-005-02 places all components (relays, instrument transformers, dc supply, breaker trip paths) in the compliance program. This forces much of the distribution-level components to be placed in the compliance program. 6- The response to Item 2A of the FAQ Document, page 17, seems to indicate that commissioning test results do not have to be captured as the initial test record, only the in-service date. Is this a correct interpretation of the response? 7- Table 1a (Unmonitored Protection Systems) seems to indicate that a complete functional trip test must be performed for the UFLS/UVLS protection system control circuitry. This wording is identical with the wording for the protection system control circuitry (except UFLS/UVLS) table entry. This implies that UFLS/UVLS functional testing should include tripping of the feeder breakers for these unmonitored systems. Table 1b (Partially-Monitored Protection Systems) indicates that actual tripping of circuit breakers is not required under the UFLS/UVLS control circuit functional testing. Is this because trip coil continuity is being monitored and alarmed under Level 2 Monitoring? Must feeder breakers be tripped during the functional testing if the trip coil continuity is not monitored and alarmed (unmonitored protection system)? 8- All standards to be retired should be specifically listed in the Implementation Plan.

Response: The SDT thanks you for your comments.

1. Requirement R4.3 has been added to the standard to address some of these concerns. It reads as follows:

R4. Each Transmission Owner, Generator Owner, and Distribution Provider shall implement its PSMP, including identification of the resolution of all maintenance correctable issues as follows:

4.3. Assure either that the components are within acceptable parameters at the conclusion of the maintenance activities or initiate any necessary activities to correct unresolved maintenance correctable issues.

2. The SDT understands that workloads may increase. However, with increasing sensitivity to degraded system performance, the increased attention to Protection System maintenance is critical to BES reliability. NERC's analysis of major system events reveals that Protection System maintenance is a contributing factor to many major system problems.

3. The SDT appreciates that you recognize these issues which were central in developing the Implementation Plan.

4. Table 1a provides activities and intervals for components for which Level 2 or Level 3 maintenance cannot be fully justified. Additionally, considerable time can transpire between successful balloting and regulatory approvals and major elements of the standard will be largely established even well before balloting. Entities are encouraged to proactively begin making the necessary program adjustments.

Organization	Question 10 Comment
5. PRC-008 currently addresses "UFLS equipment" which is a bit vague. Arguably, the identified components within PRC-005-2 may be regarded as various portions of "UFLS equipment". The SDT contends that the indicated activities are necessary, and notes that some of the activities are less stringent than for other Protection System components. **6. FAQ IV-2-A, page 22) now indicates that commissioning records are one option to establish the start date of maintenance intervals, and to establish the baseline.** **7. The Tables have modified to clarify that actual tripping of the breakers is not required for Protection System control circuitry for UFLS/UVLS only.** **8. The SDT agrees. The Implementation Plan will be modified to indicate retirement of the four legacy standards upon the completion of the Implementation Plan.**	
Nebraska Public Power District	Definition of Terms: 1. Footnote 2 for R4 defines a "maintenance correctable issue". This should be added to the Definition of Terms section. 2. Sections 4.2.5.4 and 4.2.5.5 inappropriately extend Generator Protection Systems to Station Service Transformers. These are components necessary for plant operation however they are not part of the generator protection scheme. This conclusion is supported by the explanations on page 16 of the FAQ. 3. The FAQ states the operation of the listed station auxiliary transforms protective relays would result in the trip of the generating unit and, as such, would be included in the program. The FAQ goes on to state that relays which trip breakers serving station auxiliary loads such as pumps, fans, or fuel handling equipment, etc., need not be included in the program even if the loss of those loads could result in a trip of the generating unit. The FAQ appears to be inconsistent. Station auxiliary transformers are included because they would result in the trip of the generating unit while other loads such as pumps, fans, etc., are excluded even if their trip could result in a trip of the generating unit. In my opinion, the station service transformers like pumps, fans, etc. are components necessary for plant operation but not necessary for generator protection and should therefore be excluded from PRC-005-2 by removing Sections 4.2.5.4 and 4.2.5.5 from the standard and modifying the FAQ accordingly. 4. R1 (1.1) First sentence: "For each component used in each Protection System..." is ambiguous. The sentence should be revised to say..."For each Protection System component, include all maintenance activities specified in Tables 1a, 1b, and 1c." This limits the components to only those identified by the definition of a Protection System. 5. R2 End of sentence: "possess the necessary monitoring attributes." is ambiguous. The sentence should be revised to say..."possess the monitoring attributes identified in Tables 1b or 1c." This specifically defines which attributes are necessary. 6. R4 I am concerned with including the phrase "including identification of the resolution of all maintenance correctible issues". Providing evidence of implementation of the PSMP will require the collection and submittal of all work documents that restored a device to functional order by calibration, repair, or replacement. It is reasonable to assume that appropriate corrective actions were taken for each specific situation. Identification of the resolution will add a significant documentation burden without adding to the reliability of the BES. Implementation of the PSMP may be evidenced without including identification of the resolution of all

Organization	Question 10 Comment
	maintenance correctible issues. It is interesting to note that nowhere in PRC-005-2 does it state that you have to take corrective actions to return a component to normal operating conditions. "No action taken" can be the resolution taken by the utility of a maintenance correctible issue.

Response: The SDT thanks you for your comments.

1. Establishing this term within the "Definition of Terms" would add this to the NERC Glossary. Instead, the SDT believes that this term is relevant only to this Standard, and that establishing it in the Glossary of Terms rather than simply as a term within this standard would expose entities to potential compliance exposure by having to refer to the Glossary to implement the standard.

2. Station service transformers are system components and the Protection Systems on those system components must be maintained as indicated in this standard. (See FAQ III-2-A, page 20)

3. Many of the components (pumps, fans, etc) are redundant, and a plant may be able to withstand loss of one of these. However, the loss of the station service transformer will result in simultaneous loss of many such elements, and will result in immediate plant shutdown. Also, the station service transformers may be necessary to achieve an orderly plant shutdown, and the loss of a station service transformer may result in a more abrupt plant shutdown. Improper Protection System performance due to maintenance issues must not be the cause of such an event. (See FAQ III-2-A, page 20)

4. The SDT has modified the standard in consideration of your comment. The original Part 1.1 was replaced with a new Part 1.1 and a new Part 1.3 was added as shown below,

1.1. Identify all Protection System components.

1.3 For each Protection System component, include all maintenance activities specified in Tables 1a, 1b, or 1c associated with the maintenance method used per Requirement 1, Part 1.2.

4. The SDT has modified the standard in consideration of your comment. The requirement was modified to read as follows:

R2. Each Transmission Owner, Generator Owner, and Distribution Provider that uses condition-based maintenance intervals in its PSMP for partially or fully monitored Protection Systems shall ensure the components to which the condition-based criteria are applied, possess the monitoring attributes identified in Tables 1b or 1c.

6. A fundamental tenet of compliance is that "if it's not documented, it's not done." Therefore, the documentation you describe will likely be necessary to demonstrate compliance. The PSMP definition, the new R4.3, and the General Requirements of each Table all establish that maintenance-correctable issues need to be resolved. If there is a maintenance-correctable issue, "no action taken" does not seem to be an acceptable response.

Florida Municipal Power Agency, and its Member Cities	1. Facilities applicability 4.2.2, due to the changes in applicability of the draft PRC-006, ought to refer say something like UFLS which are installed per requirements of PRC-006 rather than per ERO requirements. 2. In requirement R1, bullet 1.1 ought to state "For each component used in each Protection System, include all "applicable" maintenance activities specified in Tables 1a, 1b and 1c". For instance, if every component has continuous monitoring, why

Organization	Question 10 Comment
	should the program include 1a and 1b?

Response: The SDT thanks you for your comments.

1. The existing PRC-006 establishes that entities install UFLS in accordance with Regional requirements (which, by extension, are ERO requirements). In accordance with FERC Order 693, PRC-006 is currently undergoing revision to be a continent-wide standard, in which case it will itself be an ERO requirement. Clause 4.2.2 applies equally to either situation.

2. Requirement R1has been modified in consideration of your comment. The original Part 1.1 was replaced with a new Part 1.1 and a new Part 1.3 was added as shown below,

1.1. Identify all Protection System components.

1.3 For each Protection System component, include all maintenance activities specified in Tables 1a, 1b, or 1c associated with the maintenance method used per Requirement 1, Part 1.2.

American Transmission Company	1. General Comment: The requirements section of the standard seems acceptable. 2. NOTE: Why does R1.3 identify the inclusion of batteries? We believe that this should be part of the definition. 3. We believe that the team needs to define the term “condition-based”. 4. Does the Protection System definition in PRC-005-2 or interpretation of the standard and the tables line up with other NERC Standards? 5. The table formats (1a through 1b) are confusing and should be reconsidered. We found is difficult to relate one table to another. (No consistency in the Type of components)

Response: The SDT thanks you for your comments.

1. The SDT thanks you for your support.

2. R1.3 specifies that batteries can be tested ONLY via TBM. That is the intent of the requirement. In the Protection System Maintenance – Frequently Asked Questions (FAQ) document (FAQ IV-3-G, page 26.) which accompanied the standard and in the Supplementary Reference Document, Section 15.4 (page 23), the SDT explains why batteries are excluded from PBM and the standard should include all batteries associated with a Protection System in a time-based program.

3. The SDT declines to introduce a defined term for this. Table 1b and Table 1c identify condition-based maintenance to include consideration of the known condition of the component within condition-based maintenance. The Supplemental Reference Document, Section 6 (page 8) and the FAQ (V-3, page 38 and V-4, page 39) also describe condition-based maintenance considerations.

4. The SDT was required to investigate all uses of this defined term with NERC standards and assure that these changes are consistent with the other

Organization	Question 10 Comment
applications. **5. The SDT has modified to Tables to make them more consistent with each other.**	
CPS Energy	Have several comments and questions: 1. I think that the way that the tables are done is confusing. My biggest complaint is that the "breakdown" of the Type of Component varies between the tables. For example, in tables 1a and 1B, you have Protective Relays, but in table 1c, you have Protective Relays and Protective Relays with trip contacts. This is a little confusing at times. 2. I also find the UFLS/UVLS requirements confusing as well. It can be confusing to figure out when the UFLS/UVLS has a separate requirement. Would prefer to see the UVLS/UFLS in separate tables; e.g. 2a, 2b, 2c. 3. SPCTF should provide the basis for how the intervals in table 1 were derived. While the supplemental describes that a survey of its members with a weighted average was used to determine the maintenance intervals. However, what is not clear is what exactly was surveyed in terms of components. Was it just relay calibration testing? Functional testing? What about communications, voltage and current sensing devices, trip coils, etc? Was UVLS and UFLS looked at separately from transmission? Was generation also considered as well? Why did values change from the SPCTF technical reference "Relay Maintenance Technical Reference" dated September 13, 2007? For example, UVLS/UFLS testing and calibration went from 10 years to 6 years for un-monitored, communications went from 6 months to 3 months for un-monitored, and instrument transformer testing went from 7 years to 12 years for un-monitored systems. What is the basis for the intervals? 4. The committee should reconsider the use of the term "A/D converters". The point of the requirement is to assure that the analog signal from the instrument transformer is correct to the processor. Two problems with just saying "A/D converters". One, it ignores the digital relay input transformers of microprocessor relays. The SEL-4000 test set can bypass these transformers. Would using this test set be adequate to test the "A/D converters"? Two, some relays, such as the SEL-311L, perform an A/D self-test. I do not think that the A/D self-test performs the testing that is being sought by the document. 5. Could a better example of "Calendar Year" be provided? Is it simply the years difference, or should the days be included as well? In your example in the reference document, you show that December 15, 2008 and December 31, 2014 as meeting the requirement of 6 calendar years. Would like to see a more exaggerated example. Would an unmonitored protective relay is calibrated on January 1, 2008 and then again on December 31, 2014 meet the "Maximum Maintenance Interval" of "6 Calendar Years"? 6. Does the standard address breakers and other switching devices that do not have "trip coils". Magnetic actuated circuit breakers, reclosers, and possibly other devices do not have trip coils to monitor or test. Do the trip coil testing and requirements fully take this account? If a breaker does not have a trip coil, is some other type of test required? Does not having a trip coil prevent extending the Protection System Control Circuitry interval to 12 years? 7. The requirement for testing Voltage and Current Sensing devices should be better thought out as to what is trying to be accomplished. On page 11 of the reference document, item 6 under "Additional Notes for Table" it states that "phase value and

Organization	Question 10 Comment
	phase relationships are both equally important to prove". In both the FAQ document (page 6, 3A) and the reference document (page 21, 15.2), several methods to verify the voltage and current sensing inputs to the protective relays and satisfy the requirement are given. However, these methods do not all seem to verify the same thing. Totalizing watts and vars on the bus verifies that the current transformers are correctly and providing correct signals to the relays, but do not necessarily verify that the voltage sensing device is necessarily correct if the same PT is used for all relays on the bus. Performing a saturation test on a CT and a ratio test on the PT does not verify the phase angle relationships, which is stated as important on page 11 of the reference document. What exactly needs to be accomplished by the Voltage and Current Sensing devices testing? That an analog signal is getting from the instrument transformer to the device? That the signal is an accurate representation of the measured quantity? What about frequency for UFLS relays, where voltage magnitude may not be that important? Do CT's need to be verified for multiple CT grounds? Do the any examples described necessarily find multiple ct grounds? 8. This standard should also address the ramifications of RRO's not allowing for equipment to be removed from service for testing. Either RRO's should be required to allow outages in some time frame or leeway should be given to entities that cannot get equipment out for maintenance because RRO's will not grant reasonable outage times for testing and maintenance. 9. Page 13 of the reference document states that the 3-month inspection should include checking that "equipment is free of alarms, check any metered signal levels, and that power is still applied." What is meant by "metered signal levels"? What does the term "metered" mean, specifically in terms of an on-off power line carrier scheme? 10. It appears that if a company on a TBM plan has shorter intervals than the maximum allowable of this proposed standard, the company would not be in violation if they did not meet their own plan but still met the intervals required by this proposed standard. Is this true? Could this actually reduce reliability of the BES if companies are now allowed to extend intervals to those listed in this document without any justification?

Response: The SDT thanks you for your comments.

1. The SDT has modified to Tables to make them more consistent with each other.

2. Many of the components of UFLS and UVLS are very similar to other generic Protection System components, with similar maintenance activities. The SDT has modified the Tables to clarify activities which apply specifically to UFLS and/or UVLS.

3. The SPCTF, in an earlier technical paper, provided descriptions of the derivation of the intervals, but this technical paper was not charged with developing a measurable standard. The SDT has used this information, as well as consideration of system and generation plant operating constraints, EPRI reports, IEEE surveys, and experience of SDT members and others, to develop the intervals in the tables. These intervals were also adjusted to address the SPCTF's recommendations about grace periods without providing grace periods. The SDT also considered intervals that supported establishment of systemic maintenance programs.

4. The SDT modified the standard in consideration of your comment. A/D converters are now discussed only in the Monitoring Attributes within Table 1c; otherwise, the relay must be confirmed to operate properly. However, the SDT did NOT define methodology.

5. Disregard the complete date and just look at the year portion. For a 6 calendar-year interval, if the test date was IN 2004, the next test date must be IN or

Organization	Question 10 Comment
before 2010. **6. Where relevant to the requirements of the standard, any of these devices apply similarly. Many of the alternate technologies mentioned do not seem relevant to BES Protection Systems, but instead to UFLS and/or UVLS systems. The required maintenance activities for these components do not require actual test tripping.** **7. No single method of verification may be relevant for every imaginable situation. The activities relevant to Voltage and Current Sensing Devices have been revised in consideration of your comment.** **8. Some entities may need to perform certain maintenance activities more frequently to assure that the activities are performed within the required intervals. Allowing a "grace period" would create a standard that is not measurable. Please refer to Section 8 of the Supplementary Reference Document (page 9) for a discussion on this issue. Outages must be planned in accordance the Reliability Coordinators (RRO's, or RE's, have no role in this) to support reliable system operation.** **9. "Metered signal levels" refer to the communication signal levels which are part of proper communications system function for certain equipment, such as power-line carrier systems. The SDT is continuing to align the three documents (Standard, Supplemental Reference, and FAQ) to assure consistency.** **10. You will be held to compliance with your plan, whatever it is, under R4, but your plan must also adhere to the intervals established by NERC. As long as you still have elements subject to PRC-005-1, you need to comply with the program established for PRC-005-1. When you have fully implemented PRC-005-2, the requirements of PRC-005-1 no longer apply. However, the SDT hopes that entities that feel that a shorter interval is appropriate will continue to use that interval.**	
JEA	1. Implementation Plan - Strongly encourage keeping the implementation plan and allow for an extension of the implementation plan for the time required to fund, design, procure, install and commission redundant protection systems for current non-redundant lockout systems at the lower kV levels of the BES. 2. Our present and past performance of LOR and auxiliary relays will support a PBM/CBM program that allows for a much longer time than the six years proposed for EM LOR trip testing. To use a TBM for LORs of six years, may in fact, lower the reliability of the BES due to the complete outages required, along with the detailed procedures that must be created and rigorously followed to perform these tests without subsequent load loss on the BES.
Response: The SDT thanks you for your comments. **1. If an entity expects to encounter difficulty in performing the maintenance specified in the standard, the SDT encourages them to begin implementation of the necessary features to support maintenance while the standard is still in a development or approval stage.** **2. The SDT encourages you to begin assembling the documentation necessary to support a PBM for these components such that you may implement that PBM when the standard becomes effective.**	
Consumers Energy Company	1. In Table 1a for Station dc supply it requires verification that no dc supply grounds are present. DC grounds are common

Organization	Question 10 Comment
	occurrences and the activity should be to document if dc grounds are present. 2. Please specify how cell to cell connection resistance is measured. 3. For station dc supply (battery is not used) change "Verify the continuity of all circuit connections that can be affected by wear and corrosion" to "Inspect all circuit connections that can be affected by wear and corrosion." 4. Is "metered and monitored" equivalent to "alarming"? 5. If a component failure causes the unit to trip, what is the purpose of testing it? It will always test positive until the point of failure and that point is identified when the unit trips. 6. In the Facilities Section 4.2.5.4 "station service transformer" should be changed to "unit connected auxiliary transformer" to be consistent with Figure 2 of the Supplement Reference Document. 7. Facilities Section 4.2.5.5 should also include "System connected auxiliary transformers are excluded when only used for unit start-up." 8. There should be an allow variance period (grace period) for the testing intervals. 9. The maximum allowable time periods should be in calendar years, defined as "occurring anytime during the calendar year." 10. The following statement should be added to Requirement 1.2: "Identification at a program level is permissible if all components use the same maintenance method."

Response: The SDT thanks you for your comments.

1. The SDT has modified the standard in consideration of your comments concerning dc grounds – the maintenance activity was revised to read, 'Check for unintentional grounds."

2. The IEEE Standards 1188 and 450 have very detailed descriptions of how to measure cell to cell connection resistance using a Micro-Ohm Meter.

3. Upon consideration of your comment, the SDT determined that it is important to both "check the continuity" and to verify the physical condition. Therefore, the standard has been modified to include both.

4. Not necessarily. "Metered and monitored" are more detailed than "alarming". Alarms simply report an abnormal condition, while "metered and monitored" will probably actually report values.

5. In this case, testing of the component should assure that the component functions properly and thus does NOT result in an unintended trip of its system component, and that it WILL trip when called upon to do so.

6. The SDT contends that "station service transformer" is a more universal description for this component. The Supplemental Reference Document has been modified for consistency.

7. The SDT contends that "startup transformer" Protection Systems also need to be maintained per PRC-005-2. During startup, these components are

Organization	Question 10 Comment
critical for reliability. On the other hand, maintenance of the Protection Systems on these system elements should be somewhat easier to schedule. **8. The SDT considered this issue when developing the intervals, and realizes that some entities may need to perform certain maintenance activities more frequently to assure that the activities are performed within the required intervals. Specifically, for generation facilities, there would seem to be numerous opportunities within the 6-year or longer intervals to perform the required maintenance during a scheduled plant outage, and maintenance with shorter intervals can be characterized as non-intrusive maintenance, more of an inspection than anything else; the SDT believes that this maintenance can be done on-line. The SDT is concerned that a "grace period", if permitted, would be used to establish a de-facto longer interval, and that the established intervals would thus not be measurable. Additionally, FERC Order 693 directed that NERC establish maximum maintenance intervals, and allowing for a "grace period" would not conform to this directive. Please refer to Section 8 of the Supplementary Reference Document (page 9) for a discussion on this issue.** **9. All multi-year periods ARE in calendar years. There are other essential shorter intervals, and the SDT does not agree that these can be extended to a minimum of one calendar year – most of these activities are "inspection" type activities. The SDT does not believe that it is necessary to define this term; "Calendar year" seems to be a very precise term in itself.** **10. To the degree that you can concisely describe your program this way, and demonstrate implementation of your program, it does not seem to the SDT that this modification to the requirement is necessary.**	
ITC Holdings	1. In the Definitions of Terms, the Protection System (modification) should include control circuits up to and including the trip coil of ground switches used in protection schemes. 2. Footnote 2 (Maintenance correctable issue) should be included in the Definition of Terms in the body of the standard.
Response: The SDT thanks you for your comments. **1. To the degree that the ground switch (or, more properly, the Protection System that operates the ground switch) is protecting a BES element, the SDT classifies the ground switch as an interrupting device.** **2. Establishing this term within the "Definition of Terms" would add this to the NERC Glossary. Instead, the SDT believes that this term is relevant only to this standard, and that establishing it in the Glossary of Terms rather than simply as a term within this standard would expose entities to potential compliance exposure by having to refer to the Glossary to implement the standard.**	
Entergy Services, Inc	1. It would be beneficial to also include an explanation or definition of the term "calendar year" in the standard. It is not readily apparent in the draft standard, especially in light of the new maximum interval requirements, that a task can be performed anytime between 1/1 and 12/31. 2. Although addressed in the FAQ and Supplement, the terms "Upkeep" and "Restoration" are referenced in the definitions section of the standard but are not used anywhere else in the document, or with regard to routine activities. They should be eliminated from the standard unless there are upkeep or restoration requirements.
Response: The SDT thanks you for your comments.	

Organization	Question 10 Comment
1. Disregard the complete date and just look at the year portion. For a 6-calendar-year interval, if the test date was IN 2004, the next test date must be IN 2010. **2. While "upkeep" is not used in the standard, the SDT has identified the term as a component of maintenance. "Restoration" is used in R4.3 and within the header of each Table.**	
AEP	1. Monitoring and tracking the activities prescribed in the standard seem too complex to manage at a level needed for auditable compliance. The activities prescribed seem to lean toward conventional protection systems and do not take into account newer special technology devices (High Voltage DC, Static Var Compensator and Phase Shifting transformer controls) and how there are to included. 2. R1 1.2 Does the draft standard require a basis for an entities" defined time based maintenance intervals or can an entity just move directly to the intervals prescribed and use the standard as its basis" 3. R4. This requirement seems to refer to failed equipment and its reporting. This corrective maintenance activity is outside of the interpreted preventative maintenance theme of the standard and adds another layer of complexity in compliance data retention. It also implies that a failed piece of equipment or segment could remain failed for the entire maintenance interval. 4a.Tables 1a & 1b. Station dc supply (that has as a component any type of battery) Interval: 18 months - This requirement incorporates specific gravity testing (where applicable). Although (where applicable) is not defined, it seems it refers to all non-sealed batteries. 4b. For sealed batteries, a more frequent internal ohmic test is prescribed. The same 18 month requirement incorporates ohmic testing which is essentially equivalent to specific gravity. Specific gravity and measure of internal temperature are invasive tests which subject personnel to handling acid and subject the battery to damage. If the logic for sealed batteries is to do more frequent ohmic testing why not allow more frequent ohmic testing as a substitute for specific gravity? We would suggest ohmic testing every 6 months with any questionable results rechecked using specific gravity. This eliminates excessive intervention into all cells and gives a validity check on the ohmic testing. 4c.For Ni-Cad the performance service test has no option (6 year intervals). Typically, the Ni-Cad can yield a low voltage indication; however testing the cells in pairs allows testing and finding bad cells. Why not offer a more frequent ohmic test for the Ni-Cads? 5. Facilities 4.2.1 and R1. "applied on, or are designed to provide protection for the BES." This may be in conflict with Regional Entity (RE) BES definitions. There needs to a clear understanding of what is included and what is not without regional differences. There should be no responsibilities or requirements of the RE. BES also takes on different meanings depending upon which of the many standards it is applied. Data Retention 1.4 Data retention for two intervals could mean that records would need to be kept for 24 years. This seems impractical. Could audit evidence be used in lieu of actual data for long intervals? 6. Tables: Where the interval is in months, the term "calendar" months should be used for clarification.

Organization	Question 10 Comment
	7. Table 1a:"verify the continuity of the breaker trip coil". The SDT assumed that Trip Coil Monitoring (TCM) could be accomplished by verifying/inspecting red lights. This may be true in most cases, but there are designs that do not incorporate this type of TCM and the breaker would have to be exercised every 3 months if not operated by natural events unless the scheme gets replaced. This seems counterproductive to the reliability of the BES. The implementation plan does not take the time required for upgraded systems into consideration. 8. Table 1a DC Supply, 3 month interval "Verify no dc supply grounds are present." Does this mean that you are non-compliant if you have a DC ground? This also needs to be clarified as to the amount of acceptable ground that could be present. Table 1a PS communications equipment channels 3 month interval: Do the activities imply that only alarms be verified and that no channel "playback" be performed? 9. If SPR relay or similar auxiliary relay is excluded as a protective relay, then do we not have to verify its tripping contact as part of the DC system? 10. Table 1a The exclusion of UVLS/UFLS from certain activities is confusing. Does trip coil monitoring not have to be performed on these systems? Tables: 11. Since PT and CT devices themselves are not included in the PS definition, then the word "devices" should be removed from the type of component column describing inputs to the relay. 12. Table 1a. Even though an entity may be on time-based intervals, would a natural occurring fault event reset the maintenance clock for the protection segment involved? 13. Assessment of Impact of Proposed Modification to the Definition of Protection System: Reclosing and certain auxiliary relays have been excluded from protection system definition. This new definition would have an impact on other PRC standards that use this term in its requirements, specifically the Misoperations investigation and reporting standards. These other standards, as written today, are not clearly written as to the application and assumptions as to what is included in a protection system. 14. Trip coil Monitoring: If the trip coil is actually part of the DC circuitry, then why is there a differing (shorter) interval for this series connected element?
Response: The SDT thanks you for your comments. **1. The SDT invites additional participation to address such devices.** **2. There is no additional basis required for an entity to adopt the maximum allowable intervals established within the standard.** **3. The SDT has modified the standard to require that an entity also initiate correction of maintenance-correctable issues. There is no time-period specified for actually correcting maintenance-correctable issues in recognition of the wide variety of activities that may be represented.** **4a. The SDT has modified the standard in consideration of your comments concerning specific gravity not being applicable to non-sealed batteries. The**	

Organization	Question 10 Comment
	maintenance activities no longer include any reference to specific gravity. **4b. The SDT has modified the standard in consideration of your comments concerning specific gravity and internal temperature. The maintenance activity associated with specific gravity and internal temperature was removed from the revised standard.** **4c. Presently there are no other options that are available today to verify that a Ni-Cad battery can perform as designed.** **5. NERC standards establish minimum requirements, which can be expanded on by Regional Entities. This standard does NOT place any requirements upon the Regional Entity. BES is a defined NERC and Regional Entity term which applies uniformly to the various standards. The Records Retention section has been modified to read as follows:** The Transmission Owner, Generator Owner, and Distribution Provider shall each retain documentation of the two most recent performances of each distinct maintenance activity for the Protection System components, or to the previous on-site audit date, whichever is longer. **6. The SDT has modified the standard in consideration of your comment and the word, "Calendar" was added to clarify that the term "months" means "calendar months"** **7. The SDT has removed the cited requirement.** **8. The SDT has modified the standard in consideration of your comments concerning dc grounds (changed to "Check for unintentional grounds" and compliance FAQ II-5-I, (page 15) explains that the entity is responsible to determine if corrective actions are needed upon detection of unintentional dc grounds.** **9. Yes.** **10. The Tables have been modified to better delineate the specific activities related to components associated with UFLS/UVLS relays.** **11. The definition has been further modified to add these devices.** **12. Only to the degree that the Protection System operation for the natural fault verified the functions and "performed" the activities within the Table. See FAQ II-4-C, page 10 and Supplementary Reference Document, Section 15.3, page 22.** **13. The SDT, in accordance with the NERC Standard Development Procedure, analyzed all other uses of the defined term, "Protection System" within the NERC standards, and, in a document which was posted with the standard and other associated documents during the comment period, listed all other uses and concluded that there is no impact on the other uses. Reclosing relays are still not listed in the definition, but auxiliary relays, which previously were not listed and now are, were implicit in the previous "dc control circuits".** **14. The Tables have been modified to remove this shorter-interval specific activity.**
Green Country Energy LLC	None
Georgia System Operations Corporation	None.

Organization	Question 10 Comment
Operations and Maintenance	None.
ENOSERV	On Table 1A, the maximum time lengths are too long, especially for electro relays. A prime example is when testing a KD relay on a yearly basis and most of the time needs to be adjusted because of how far off it comes out. Allowing entities to take their time up to six calendar years may be too long.
Response: The SDT thanks you for your comments. See the Supplementary Reference Document, Section 5.1, page 7.	
Xcel Energy	Please clarify if the following are subject to PRC-005-2 requirements: 1) a battery that is in a station where the only BES element is a UFLS scheme 2) batteries used only to support communication elements (microwave houses)
Response: The SDT thanks you for your comments. **1) The SDT has modified the standard to clarify that the only DC Supply maintenance activity relevant to UFLS is to verify the DC supply voltage.** **2) The proper functioning of such batteries (communication system) will be addressed by the verification and monitoring of the communications system, and by addressing maintenance correctable issues related to the communications system. See FAQ II-5-K, page 15.**	
BGE	1. PRC-005-2R1 1.2 Identify whether each Protection System component is addressed through time-based, condition-based, performance-based, or a combination of these maintenance methods and identify the associated maintenance interval. Comment: The existing standard PRC-005-1 requirement R1.1 says a maintenance program must include the maintenance and testing intervals and their basis. PRC-005-2 does not have a similar requirement, and the associated FAQ indicates the standard "establishes the time-basis for a Protection System Maintenance Program to a level of detail not previously required". Does PRC-005-2 require evidence to support the basis for a defined maintenance interval, or is the basis now purely defined by PRC-005-2? 2. R2 Each transmission owner .....shall ensure the components to which condition-based criteria are applied....possess the necessary monitoring attributes? Comment: Depending on the evidence requirements that are enforced this could be a very large undertaking offsetting the benefit of extending intervals with CBM. It would be helpful to understand what the drafting team or other stakeholders would envision as appropriate evidence supporting this requirement. 3. R4 Each transmission owner .....shall implement its PSMP, including the identification of the resolution of all maintenance correctable issues as follows :4.1 ....within the maximum allowable intervals not to exceed those established in table 1a, 1b, 1c Comment: It's inferred that this requirement applies to maintenance correctable issues that are discovered as a consequence of scheduled maintenance and not as a consequence of monitoring or misoperations. If that inference is incorrect the requirement

Organization	Question 10 Comment
	imposes an unequal playing field for the resolution of known correctable issues depending on the monitoring being employed, not to mention an unreasonably long allowance for the correction of some serious problems. On the other hand, the requirement imposes an unreasonably short period of time for the resolution of some issues that may be associated with short interval maintenance/inspection intervals, such as battery grounds. 4. Section D1.4 Data Retention? The Transmission Owner shall...retain documentation for two maintenance intervals.... Comment: Recognizing that in order to achieve compliance PS owners will execute scheduled maintenance on shorter intervals than the maximum requirement it's uncertain what this means. Example: Max interval for instrument transformers is 12 years, we maintain every six. Is the requirement for 24 years of data or 12? It seems like there ought to be an upper limit. 24 years is a very long time. Table 1a Protection System Control Circuitry (Breaker trip coil only); 3 month maximum interval; verify the continuity....of the trip circuit.....except for breakers that remain open for the entire maintenance interval. Comments: What's the failure-probability justification for this requirement when other similar dc control components have a maximum interval of 6 years? It seems like the SDT made an assumption that all trip coils are monitored by red lights and could be verified by inspection and said somewhat arbitrarily, "do it because you can". "Remaining open for the entire maintenance interval" is a poorly reasoned effort to arrive at a necessary exception. Even if the red-light-through-the-trip-coil assumption is accurate for a normally open breaker, it's unreasonable to demand that an inspection take place if it's closed at anytime during the interval. The actual time that its closed might be seconds or a few minutes, but that time would make the exception moot and put the owner out of compliance. On the subject of three month maximum intervals in general: One can agree that three months is about the right time for some of these inspections, batteries in particular. However as written, three months and a day is "out of compliance". More flexibility would avoid a lot of meaningless "technical fouls". How about four times a year not more than four months between each...or something like that. 5. Table 1aStation DC supply (that has as a component any type of battery); verify that no dc supply grounds are present? Comment: All grounds are not created equal. No guidance for acceptance criteria is given, nor is evaluation/acceptance criteria explicitly made the responsibility of the battery owner (as it is for relay calibration). Without any guidance the requirement of "no" grounds is open to unreasonable interpretation (there is always a ground if one considers a high enough resistance) and high impedance grounds that do not present a risk to the PS will consume effort and attention unnecessarily. 6. Station DC supply (that has as a component any type of battery); Measure to verify that the specific gravity and temperature of each cell is within tolerance? Comment: It is not clear that a specific gravity test provides any better data concerning battery health than an impedance test, but specific gravity testing is a requirement. Can the impedance test be performed as routine maintenance in lieu of a specific gravity test? 7. General Comment: It is not clear whether Communications batteries should be held to the same testing/maintenance requirements as the station battery. Communications batteries are in place to supply relatively low power electronic equipment and do not have to provide energy to trip a breaker. Simple monitoring of the channel may be sufficient to assure battery

Organization	Question 10 Comment
	availability, and a less rigorous maintenance plan may be appropriate based on the continuous monitoring and low duty of the battery. 8. FAQ Group by Monitoring Level A level 2 (partially) monitored Protection System or an individual component of a level 2 monitored Protection System has monitoring and Alarm circuits on the Protection System components. The alarm circuits must alert a 24-hour staffed operations center. Comment: The standard Table 1b, General Description for Level 2 monitoring is simply described as Protection System components whose alarms are automatically provided daily (or more frequently) to a location where action can be taken for alarmed features. This appears to be a conflict between the FAQ and the standard. The more stringent requirement of the FAQ, for the reporting facility to be manned 24 hours per day, could be read to imply a requirement for a specific time to respond to an alarm. Is there such a requirement? Is there an implied requirement to document the alarm condition and the response time?
Response: The SDT thanks you for your comments. **1. If a time-based or condition-based program is used according to Tables 1a, 1b, and 1c, no additional basis is needed. If the entity elects to use Performance-based maintenance, the activities in Attachment A must be used to establish the related basis.** **2. See FAQ V-1-D, page 22 for a discussion relevant to your comment.** **3. The SDT has modified the standard in consideration of your concern concerning the interval of checking for unintentional dc grounds and the ability to remove the unintentional ground from the dc system. R4 of The SDT has modified the standard to require initiation of the resolution of maintenance-correctable issues, rather than to identify their resolution. See FAQ II-5-I, page 15.** **4. The data retention section has been modified to read as follows:** The Transmission Owner, Generator Owner, and Distribution Provider shall each retain documentation of the two most recent performances of each distinct maintenance activity for the Protection System components, or to the previous on-site audit date, whichever is longer. **5. Both the standard and FAQ document have been modified in consideration of your comments concerning dc grounds to specify that it is up to the owner to determine if corrective actions are needed for unintentional dc grounds. See FAQ II-5-I, page 15.** **6. The standard has been revised to remove maintenance activities related to specific gravity.** **7. Communication system batteries are not included in the requirements for "Station Batteries". The entity must ensure proper operation of the relay communications circuit which would include adequate maintenance of the equipment including the communication system batteries The proper functioning of such batteries (communication system) will be addressed by the verification and monitoring of the communications system, and by addressing maintenance correctable issues related to the communications system. (See FAQ II-5-K, page 15.)** **8. The FAQ has been modified to remove this apparent additional requirement.**	
Transmission Owner	Protection System Maintenance Program (PSMP)

Organization	Question 10 Comment
	a. The PSMP definition would be better defined if the first sentence was changed to “An ongoing program by which Protection System components are kept in working order and where malfunctioning components are restored to working order.” b. Please clarify what is meant by “relevant” under the definition of Upkeep. Should “relevant” be changed to “necessary”? c. The definition of Restoration would also be more explicit if changed to “The actions to return malfunctioning components back to working order by calibration, repair or replacement. d. Please clarify the definition of Restoration. For example, if a direct transfer trip system has dual channels for extra security even though only one channel is required to protect the reliability of the BES and one channel fails, must both be restored to be compliant? e. Protection System (modification) “Voltage and current sensing inputs to protective relays” should be changed to “voltage and current sensors for protective relays.” Voltage and current sensors are components that produce voltage and current inputs to protective relays. f. “Auxiliary relays” should be changed to “auxiliary tripping relays” throughout PRC-005-2, FAQ and the Draft Supplementary Reference. g. The word “proper” should be removed from the standard. It is ambiguous and should be replaced with a word or words that are clear and concise.

Response: The SDT thanks you for your comments.

a. The SDT does not believe that the suggested change is substantive, and sees no reason to make it.

b. Some updates may not affect the operation of the device as applied, and therefore are not relevant. “Necessary” would imply an additional level of review to determine whether the device would operate properly without the updates, while “relevant” simply implies that the update applies to the function.

c. The SDT does not believe that the suggested change is substantive, and sees no reason to make it.

d. The standard establishes that all components need to be fully maintained, and that they will function as designed. The SDT appreciates that some “restoration” activities may take an extended time to complete, but also contends that restoration to the designed condition is a vital element of maintenance.

e. The critical task is to verify that the proper representation of the primary current and voltage signals will get to the protective relays. The “Type of Protection System Component” has been modified in an effort to clarify.

f. “Auxiliary tripping relays” may exclude essential other internal Protection System functions. Therefore, the SDT declines to adopt this suggestion.

g. “Proper”, “working condition”, “correct”, etc, are all somewhat subjective terms that address the application-specific requirements related to the specific use. For example, one entity’s design standards may require that an electromechanical relay be within a 2% tolerance of the ideal operating characteristics, while another may only require that it be within 5%. Each of these is proper, correct, etc, for the application.

Organization	Question 10 Comment
Ohio Valley Electric Corp.	1. R1.2 seems to require owners to establish there own intervals and basis. Compliance with these requirements should be based on the intervals that are in tables 1a, 1b and 1c. 2. R4 implies that all maintenance correctible issues must be resolved within the Maintenance Activity Intervals. A diligent effort to restore proper function of a system should not be penalized if it does not fall within the prescribed maintenance interval.
Response: The SDT thanks you for your comments. **The SDT has modified the standard in consideration of your comment. The Parts of Requirement R1 were modified to read as follows:** 1.1. Identify all Protection System components. 1.2 Identify whether each Protection System component is addressed through time-based, condition-based, performance-based, or a combination of these maintenance methods and identify the associated maintenance interval. 1.3 For each Protection System component, include all maintenance activities specified in Tables 1a, 1b, or 1c associated with the maintenance method used per Requirement 1, Part 1.2. 1.4 Include all batteries associated with a Protection System in a time-based program. **2. The SDT has modified the standard to require INITIATION of resolution, not the actual resolution. The revised footnote reads as follows:** A maintenance correctable issue is a failure of a device to operate within design parameters that can not be restored to functional order by repair or calibration while performing the initial on-site maintenance activity, and that requires follow-up corrective action.	
E.ON U.S.	1. Recently, NERC made an interpretation on PRC-005-1 which stated that battery chargers were not to be included as part of the standard. This version of the standard seems to be in direct conflict with that interpretation, and for the reasons stated above E.ON U.S. recommends that battery chargers not be included in the standard. E.ON U.S. believes that capacity or AC impedance only needs to be done to determine service life, and therefore a periodic testing of station DC supply does not seem necessary or prudent. 2. Regarding the “Retention of Records”, retaining records of the latest test seems adequate. E.ON U.S. does not understand the point of retaining records for the past two test results. This is particularly true for equipment for which there are relatively long testing intervals, for example, 12 years. Retaining result documents from 24 years ago seems unnecessary and impractical. 3. With regard to NERC’s PRC-005-2 Supplementary Reference Section 2.4 on Applicable Relays, E.ON U.S. offers the following comments: 3.1. This section extends the applicable relay coverage to IEEE type # 86 and IEEE type # 94. Some utilities define their turbine trip relay as an IEEE type #94. E.ON U.S. interprets that the NERC scope of applicable relays is that the turbine trip relays would be excluded; however, it would further clarify this exclusion if it were mentioned as an example in the last sentence. 3.2. The Tables in proposed standard PRC-005-2 require additional clarity. E.ON U.S. suggests renaming tables to 1, 2 and 3 to

Organization	Question 10 Comment
	match Level 1, 2 and 3 monitoring. The wording and format of text is not consistent between tables. 3.3. The fields in the tables are incoherent. E.ON U.S. interpretation is that intervals and activities for UFLS and UVLS are different than other relay systems and components, but this is unclear. E.ON U.S. believes a separate table or sections for UFLS and UVLS would provide more clarity. 4. In section 7 of the Supplementary Reference the SDT refers to the Bulk Power System instead of the Bulk Electric System. These are not interchangeable and the SDT needs to explain the need to use the term in this case. The phrase "support from protection equipment manufacturers" is used several times in the technical reference (Section 8 and Section 13) yet there is no manufacturer represented on the SDT. Rather than developing one size fits all requirements applicable to all equipment, E.ON U.S. suggests that the SDT pursue comments from manufacturers to obtain recommendations on what they believe is required to maintain and test their equipment.
Response: The SDT thanks you for your comments. **1. Although this SDT team (as an Interpretation Drafting Team) drafted the recent NERC interpretation of Protection System as it is applied to PRC-005-1, the SDT believes that the charger is an integral portion of the Station DC supply; thus it has been added to the definition of Protection System by replacing "station batteries" in the current definition of Protection System to "station dc supply" in the definition for the proposed standard (PRC-005-2). The SDT disagrees with your contention that testing of the station dc supply is necessary; the station dc supply is a critical component of the Protection System, and it must be verified that it can perform its required function.** **2. A single record is not adequate to demonstrate that the equipment has been maintained according to the intervals.** **3.1. The SDT revised the Supplementary Reference to remove references to IEEE function numbers except where they are critical to the discussion.** **3.2. The SDT believes that it is actually a single table with multiple sections and has retained the table numbering. The SDT has worked to improve the consistency between the table sections.** **3.3. The tables have been revised to clarify this area.** **4. The Supplementary Reference Document has been modified to use the NERC-defined term of "Bulk Electric System" or its defined abbreviation BES, rather than "Bulk Power System" or BPS. As for manufacturer input, the SDT is concerned that it would be a violation of NERC Anti-Trust rules to seek input from manufacturers.**	
Duke Energy	Regarding the Implementation Plan, 1. R1 compliance should be the first day of the first calendar quarter 18 months following applicable regulatory approvals. Entities will need this time to change monitoring equipment and develop extensive new work practices and procedures to assure time frames and documentation of practices comply with the wording of the revised standard. 2. The time frames for R2, R3 and R4 are adequate except in cases where upgrades have to be developed and implemented in

Organization	Question 10 Comment
	order to be able to meet the intervals (such as breaker trip coil verification every three months). 3. FAQ 2C "If I am unable to complete the maintenance as required due to a major natural disaster, how will this effect my compliance with the standard." Response is the Compliance monitor will consider extenuating circumstances? We would like to see this statement clarified as to the time frame extensions that result in non compliance or fines. 4. R4 States "each transmission owner" shall implement its PSPM, including identification of the resolution of all maintenance correctable issues. If the intent is to document resolution to misoperations this is a reasonable request. If the intent is to document that a relay was found out of calibration on a routine test, which was corrected by recalibration we need some clarity on expectations of how that would be recorded and tracked. As written this statement is vague and somewhat confusing since % of allowable error may vary utility to utility. R4 doesn't appear to allow any time beyond the stated intervals for repairs or replacements that may take additional time. PRC-005-2 is maintenance and testing standard, and R4 inappropriately requires a replacement strategy and an obsolescence strategy. Is R4 intended to apply to all equipment in Table 1?
Response: The SDT thanks you for your comments. **1. The SDT believes that time provided for R1 is sufficient. Additionally, entities can use the time required for NERC Board of Trustees and regulatory approvals to work on implementation.** **2. The SDT believes that the times provided for R2, R3, and R4 are adequate.** **3. The specific issues of how the Compliance Enforcement Authority would address this issue is outside the scope of the SDT. The response in the FAQ (FAQ IV-2-D, page 23) is extracted directly from the NERC Sanction Guidelines (effective January 15, 2008)** **4. The SDT has modified the standard to require initiation of the resolution of maintenance-correctable issues that cannot be resolved during the on-site maintenance; this is focused on assuring that the Protection System is capable of performing its desired function. R4 is intended to apply to ALL equipment in the PSMP.**	
Northeast Power Coordinating Council	1. Requirements 4.2.5.4 and 4.2.5.5 require clarification. It is recommended that the drafting team provide a schematic diagram to provide clarity as to which generator and system connected transformers are included in this facility identification. 2. When Measures are added to the Standard, the SDT must consider how the owner will be required to assess and document the decision of which table will apply to each protection. While this is a compliance element, the standard should provide clarity on this matter. As written, the requirement does not seem to be measurable. 3. Requirement R4 requires clarification on what is meant by "including identification of the resolution of all maintenance correctible issues as follows:" Correctible issues should not be combined in the same sentence with the layout of the tables. 4. Table 1b: In the section for "Protection system communication equipment and channels", there needs to be clarification on "verify that the performance of the channel and the quality of the channel meets the performance criteria, such as via measurement of signal level, reflected power, or data error rate." This may be done as a pass fail test during trip checks. If the

Organization	Question 10 Comment
	communication line successfully sends proper signals for the trip checks, then the communication line is acceptable and no additional measurement are taken. 5. Table 1c: There is some confusion on what is expected on items that have a Maximum Maintenance Interval reported as "Continuous". For example, a component in the "Protection System telecommunication equipment and channels" how would one provide documentation or proof of the continuous verification of the two items listed in the maintenance activities" In other words how does one prove "Continuous verification of the communication equipment alarm system is provided" and "Continuous verification that the performance and the quality of the channel meet the performance criteria is provided". These activities appear to be "monitoring attributes" more so than they are maintenance activities. 6. Additionally, the Continuous "Maximum Maintenance Interval" needs clarification because • the interval is a monitoring interval and not a maintenance interval • a strict interpretation of "Continuous" could require redundant monitoring systems be installed or locations staffed by personnel to monitor equipment in the event remote monitoring capabilities are unavailable • It is unclear how to provide proof to an auditor that continuous monitoring has occurred over a given interval? 7. Table 1a, 1b, and 1c: The maintenance activity for battery chargers are to perform testing of the charger at full rated current and verify current-limit performance. The drafting team should provide an industry standard as how to perform this check, or specify an industry equivalent test. 8. The Table 1b Level 2 Monitoring Attributes for Component "Monitoring and alarming of continuity of trip coil(s)" should be changed to read "Monitoring and alarming of continuity of all DC circuits including the trip coil(s)". The present wording is confusing and can be interpreted to mean that the DC control circuitry needs to be checked every 12 years, as opposed to what we perceive to be the intended 6 years. 9. The Maintenance Activities in Table 1c are not consistent with the Level 3 Monitoring Attributes for Component "Protection system telecommunications equipment and channels." 10. "Continuous verification of interface to protective relays" should be added as a third activity should be added under the Maintenance Activities column." 11. In Section A. Introduction, 4.2.4 should be made to read "Protection System components which are installed as a Special Protection System for BES reliability. 12. For Requirement 4.1, a "grace period" similar to the NPCC criteria should be considered in case it is not possible to obtain any necessary outages to get the prescribed maintenance done. 13. Requirement R1 should be modified to read "Each Transmission Owner, Generator Owner, and Distribution Provider shall develop, document, and implement a Protection System Maintenance Program (PSMP) for its Protection Systems that use" This

Organization	Question 10 Comment
	revision reinforces what is necessary to ensure proper compliance with the program. 14. "The standard has multiple component tests required at different and conflicting intervals, some interdependent. Preference is to have the component listed with a common maintenance and testing interval assigned (list the testing required at 2, 4 and 6 years). This same interval should apply to all areas in the table." 15. Life span of PC's, software and software license's are much less than 12 years or asset life. This presents a problem during an audit where proof is required. The components in modern relays have not been proven over these extended time periods, users are dependent on proper functions of the alarm output of IED's. Prefer more frequent maintenance cycles over having to continuously document proof of a robust CBM or PBM program. 16. The burden placed to provide proof of compliance with a CBM or PBM maintenance program seems to outweigh any benefit in maintenance costs or reliability.

Response: The SDT thanks you for your comments.

1. Figure 2 in the Supplementary Reference Document (page 28) illustrates generator-connected and system-connected station service transformers. Additionally, 4.2.5.4 and 4.2.5.5 (in the Applicability section) further state, "for generators that are part of the BES", which must be taken in the context of the Regional Entity BES definition.

2. It is beyond the scope of a standard to require specific documentation; the entity must determine what documentation is necessary to clearly demonstrate that they are meeting the requirements. FAQ V-1-D, page 30 provides a discussion to assist in this determination.

3. The footnote for R4 has been modified to read as follows: A maintenance correctable issue is a failure of a device to operate within design parameters that can not be restored to functional order by repair or calibration while performing the initial on-site maintenance activity, and that requires follow-up corrective action.

4. A functional test only proves that the communication equipment is working. Table 1b requires that the performance criteria, such as signal levels, reflected power, etc are verified against the original performance criteria established when the channel was commissioned. See FAQ II-6-D, page 17.

5. For items with a maximum maintenance interval of "continuous", no activities are required, and the specified activities acknowledge that the monitoring of the component IS addressing the maintenance of the component.

6. The general information within the Table describes the attributes needed to achieve the Level 3 monitoring, and R2 requires that the entity establish a basis for the components to be addressed within Table 1c. Supplementary Reference Document, Sections 13 and 14 (page 20) provide discussion on this, and the Decision Trees in the FAQ and FAQ IV-1-A, page 21 also discuss this.

7. The SDT has modified the standard to remove this requirement in consideration of your comments.

8. The SDT has modified the standard to remove this requirement in consideration of your comments.

9. Table 1c has been modified to improve the consistency.

10. The SDT is not clear as to what you are suggesting.

Organization	Question 10 Comment
11. The SDT has modified the standard in consideration of your comment. As revised, 4.2.4 reads as follows: Protection System components installed as a Special Protection System for BES reliability. **12. The SDT is concerned that a "grace period", if permitted, would be used to establish a de-facto longer interval, and that the established intervals would thus not be measurable. Additionally, FERC Order 693 directed that NERC establish maximum maintenance intervals, and allowing for a "grace period" would not conform to this directive.** **13. Documentation is a matter of demonstrating compliance, not of meeting the technical requirements of the Standard. R4 specifies the implementation of the PSMP.** **14. The testing specified for many components is different for the varying intervals; therefore, a separate table entry is present for each distinct interval. For the most part, the intervals are multiples of each other, (3-months, 18-months, 3-years, 6-years, and 12-years).** **15. Entities are certainly free to perform maintenance more frequently than specified in the standards.** **16. Entities do not have to adopt CBM or PBM; the entity must decide if the benefits of such programs justify the additional administrative effort.**	
Saskatchewan Power Corporation	1. Saskatchewan recommends that the PC's and RC's designate what equipment is applied to protect the BES and should be included in the protection maintenance program. It is questionable whether the facility owners or Distribution Providers will know. 2. What are the impacts on the BES from the protection systems identified in Facilities 4.2.5 and the FAQ? For example there is an impact on the BES from generator under-frequency protection not being properly coordinated, but assuming it is and if it is not maintained isn't the impact to the unit itself? Inadvertent energization protection also seems to be an impact to the unit itself not the BES? The standard should be concerned with protection systems that impact the BES not equipment protection that has localized impacts however important they may be. 3. Change Facilities 4.2.2 to "Protection System components used for under-frequency load-shedding systems which are installed to prevent system under-frequency collapse for BES reliability." The reference to ERO is unnecessary and inappropriate.
Response: The SDT thanks you for your comments. **1. The SDT disagrees. This standard applies to Protection Systems applied on, or that are designed to provide protection for the BES as defined by the Regional Entities.** **2. Fundamentally, if a system component is part of the BES, the protection on that component indeed affects the BES.** **3. The SDT believes that this Applicability is correctly stated in the standard. This directly reflects the current PRC-008-1 standard.**	
Detroit Edison	1. Suggest that the term "alarmed failures" in the table headings be changed to "alarmed abnormalities" to better indicate that the monitored parameter may be in an abnormal state or out of range but not necessarily failed. 2. Does "system-connected" station service transformers refer to transformers connected to the BES or transformers connected to

Organization	Question 10 Comment
	a system at any voltage level? 3. Is the intent of R1.1.2 that each Protection System component (specific relay at specific location) be listed individually with its associated maintenance method and interval or can the general component category be listed as such? 4. Regarding R4, further clarification would be helpful in understanding the intent of the term "resolution of all maintenance correctible issues" as it applies to R4.1 and R4.2. Is it intended that "maintenance correctible issues" be completed within the interval? 5. It is recommended that each line in the tables be given a number or letter designation to make reference to that row easier.
Response: The SDT thanks you for your comments. **1. The SDT understands your comment, and has elected to leave the terminology in the standard unchanged. While "failure" is not a defined term within the standard, the 11th Edition of Merriam Webster's Collegiate Dictionary includes, within the definition of failure, several relevant applications of this term, including "an omission of occurrence or performance", "a failing to perform a duty or expected action", "a state of inability to perform a normal function", and "an abrupt cessation or normal functioning".** **2. This phrase refers to generation plant station-service transformers connected at any voltage level, provided that the generator is part of the BES.** **3. This depends on the description of your program. You will need to describe your program in a way that will satisfy the requirements of the Standard.** **4. The SDT has modified the standard to require initiation of the resolution of maintenance-correctible issues, with no specific time-frame on completing the resolution.** **5. The SDT thanks you for your suggestion. This has been considered several times during the development of the tables, and several different arrangements attempted, and the SDT believes that the current presentation is the most effective way to present this complex material. The SDT will, however, continue to consider suggestions to improve this.**	
SERC (PCS)	The "zero tolerance" structure proposed combined with the large volume and complexity of Protection System components forces an entity to shorten their intervals well below maximum. We instead propose a calendar increment carryover period in which a small percentage of carryover components would be tracked and addressed. For example, up to 1% of an entity's communication channel 6 year verifications could carryover into the next year. These carryover components would be addressed with high priority in that next calendar increment. There are many barriers to 100% completion or zero tolerance. Some utilities have over ten thousand components.
Response: The SDT thanks you for your comments. The SDT is concerned that a "grace period", if permitted, would be used to establish a de-facto longer interval, and that the established intervals would thus not be measurable. Additionally, FERC Order 693 directed that NERC establish maximum maintenance intervals, and allowing for a "grace period" would not conform to this directive.	

Organization	Question 10 Comment
Electric Market Policy	1. The "zero tolerance" structure proposed within this standard combined with the large volume and complexity of Protection System components requires a utilities processes and built-in grace periods to perform to perfection. Although this is a worthy goal for our industry, this can result in a large number of non-compliances for minor documentation issues or slightly missed maintenance schedules on an insignificant percentage of relays. The processing of these non-compliances can be costly in terms of resources that could be better utilized to address other transmission reliability matters. To provide a better approach, we suggest an incremental carryover system be permitted that would allow up to 0.5 percent of the PRC-005 maintenance task to be carried over to the next period, provided they are random events (not repetitive). As an example, a small percentage of our Protective System Control Trip tests on a 6-year interval could be carried over into the next calendar year when a generator outage is rescheduled. With this provision, these few tests could be handled without risk of a generator trip and without a compliance consequence. These carryover tasks could be addressed through an action plan with a defined completion date, and could be documented through a regional web portal. There are many barriers to 100% completion at a zero tolerance level with this volume of tasks.
Response: The SDT thanks you for your comments. The SDT is concerned that a "grace period", if permitted, would be used to establish a de-facto longer interval, and that the established intervals would thus not be measurable. Additionally, FERC Order 693 directed that NERC establish maximum maintenance intervals, and allowing for a "grace period" would not conform to this directive.	
Oncor Electric Delivery	1. The drafting team is to be commended for taking the Technical Paper and Draft Standard that was prepared by the NERC System Protection and Control Taskforce (SPCTF) and the recommendations of the SAR drafting team to create PRC-005-2. This draft standard allows the owners of Protection Systems several options in establishing a maintenance program tailored to their equipment and the topography of their system.
Response: The SDT thanks you for your support.	
US Bureau of Reclamation	The significance of this issue is not reflected in the period of time needed to review the documents. The supplement has many good ideas; however, the concept is going further than needed for establishing consistent maintenance intervals.
Response: The SDT thanks you for your comments. The NERC Standard Development Process normally allows for only 30-day or 45-day comment postings. The SDT intends to continue to use only the 45-day posting period of these in recognition of the extensive material to review.	
RRI Energy	1. The standard was written to implement generally accepted practices, but has developed requirements that are overly prescriptive relative to what will be required to demonstration compliance. The standard should not assume the need to write all aspects of a maintenance program into the standard or that maintenance programs will only consist of the standard requirements. Protection systems of the BES have and will continue to perform very reliably with the basic elements of a maintenance program without the need to divert resources for the development of excessive documentation to demonstrate compliance. PRC-005-1 is the most violated standard in the industry; not because of the lack of maintenance to protection systems, but because the

Organization	Question 10 Comment
	documentation requirements of the standard, given the large magnitude of components that fall within the scope of the standard. This standard significantly increases the administrative burden for additional documentation, without corresponding improvements to the reliability of the BES. 2. Recommend rewording A.4.2.5.1 as follows: "Generator Protection system components that trip the generator circuit breakers to separate and isolate the generator from the BES either directly in the breaker trip coil circuit or through interposing lockout or auxiliary tripping relays." This document should not expand the compliance scope beyond the definition of the BES. The generator protection systems that "trip the generator" also perform additional control functions that extend beyond the electrical isolation of the generating unit from the BES. These additional circuits do not protect the BES and do not belong in the scope of this document. 3. Recommend rewording A.4.2.5.4 as follows: "Protection systems for generator-connected station service transformers that trip the generator circuit breakers to separate and isolate the generator from the BES." This document should not expand the compliance scope beyond the definition of the BES. Related protection circuits of the transformer not involved with the electrical isolation of the generating unit from the BES does not belong in the scope of this document. 4. Recommend rewording A.4.2.5.5 as follows: "Protection systems for BES elements connecting to the station service transformers of generating stations." This document should not expand the compliance scope beyond the definition of the BES. The requirement incorporates radial feeds (with dedicated breakers) into the scope of the standard that are not necessarily a part of the BES as defined by some RRO's. Station service transformers are not necessarily required for generating unit operation. In some cases there are redundant sources for startup or back-up power. Protection of these transformers does not belong in the scope of the standard if they are not a part of the BES. 5. The suggested rewording of R1.2 is as follows: "Identify whether each Protection System component is addressed through time-based, condition-based, performance-based, or a combination of these maintenance methods." The requirement for the registered entity to list the interval of maintenance does not belong in the standard, especially since the maximum intervals are listed in the standard tables. The registered entity may have internal documents that intentionally target a shorter duration than the maximum interval of Table 1a. The failure to meeting those internally established targets can be a violation of the standard by the wording of this requirement. Allow R4 of the standard to identify the maximum allowable intervals. 6. In R4, the requirement for "identification of the resolution of all maintenance correctible issues" should be separated from the maintenance intervals; which define the maximum intervals of maintenance activities. The requirement should be eliminated to remove the overly prescriptive requirements of auditable documentation. If retained, a rewording of the requirement is as follows: "Each Transmission Owner, Generator Owner, and Distribution Provider shall identify the resolution of all issues identified and not corrected at the time the maintenance is initiated and the protected element is returned to service." The documented resolution of maintenance correctible issues (if retained) should apply only to activities that are unresolved and incomplete during the normal maintenance process. The standard should not micromanage the documentation process by creating requirements for excessive auditable records needed to demonstrate compliance of routine maintenance activities. 7. In R4, the requirements for Generator Owners which establish the durations of maximum allowable intervals should be

Organization	Question 10 Comment
	separated from the Transmission Owners, even if the intervals are the same. The reason is to allow for the assignment of different Violation Risk Factors. The Violation Risk Factor for the application of a 20 MVA generating unit with an operating capacity factor of less than 5%, and connected to a 138 kV system, should not be the same as those applied to a 500kV transmission line. The violation risks factors for these two applications are significantly different, and the ability to recognize this is not permitted by the standard presently. 8. Similarly, the criteria used for the sizing of station batteries for a large generating station is very different than those used for transmission facilities. Very little of the generating station battery sizing is related to BES protection, and nearly all generator protection system operations occur without reliance upon the battery. Without NERC standard requirements, Generator Owners have their own natural incentives to maintain batteries for the protection of the turbine generator bearings on the loss of AC power. With the most basic requirements of an inspection and maintenance program, there is an extremely high degree of reliability given the typical design of DC systems within a generating station, even without documented compliance to a rigid set of standards. With very basic, elementary maintenance (documented or not), the statistical probability for the random and simultaneous failure of multiple battery cells to disable the protection system of a generating station for the milliseconds of time required to separate a generating unit from the BES is insignificant (well in excess of 1 billion to 1 across an entire calendar quarter). 9. Violation risk factors and the resulting penalties for non-compliance need to be realistic.

Response: The SDT thanks you for your comments.

1. The SDT believes that the level of prescription within the standard is necessary to satisfy the guidance in FERC Order 693, and also to address observations from the Compliance Monitoring entities (the Regional Entities and NERC) that PRC-005-1 is excessively general. FERC Order 672 also specifies that NERC Reliability Standards should be clear and unambiguous. The SDT has therefore defined the minimum activities necessary to implement an effective PSMP.

2. The SDT believes that the standard is correct as drafted. Not only does the generator need to be disconnected, but this BES component must also be protected. Please refer to FAQ III-2-A, page 20 for a discussion of relevant Protection System components.

3. A loss of a generator-connected station auxiliary transformer will result in a loss of the generating plant if the plant is being provided with auxiliary power from that source.

4. A loss of a system-connected station auxiliary transformer could result in a loss of the generating plant if the plant was being provided with auxiliary power from that source, and this auxiliary transformer may directly affect the ability to start up the plant and to connect the plant to the system.

5. Inclusion of the intervals is necessary for PBM, and entities may elect to commit to more demanding intervals because of their experience.

6. The SDT has modified the standard to require initiation of the resolution of maintenance-correctible issues, but establishes no time line for the actual resolution, in recognition of the wide variation in the type of problems and the scale of the resolution.

7. The SDT disagrees. It the protection on the cited 20 MVA generating unit fails to properly isolate the unit from the system for fault conditions, it could have serious effects on reliability.

Organization	Question 10 Comment
8. The SDT believes that the station dc supply is such an integral part of the Protection System of a generating station that, it falls under NERC Reliability Standard purview and at a minimum must be maintained using the Maintenance Activities and Maximum Maintenance Intervals of Table 1. **9. The SDT will consider this with developing VRFs and VSLs.**	
Lower Colorado River Authority	We commend the work done by the SDTSDT. In particular, the merging of previous standards PRC-005-0, PRC-008-0, PRC-011-0, and PRC-017-0 which will help with the efficient management of these standards.
Response: The SDT thanks you for your support.	
Ontario Power Generation	We note that Verification of Voltage and Current Sensing Device Inputs to Protective Relays is a somewhat ambiguous activity. NERC's audit observation team came up with a similar finding. The supporting documents provide some clarity but in our opinion it would be helpful if the SDT could elaborate this activity in more detail in the Table itself.
Response: The SDT thanks you for your comments. The Tables have been modified to clarify this issue.	
Southern Company	1. We presently utilize a UFLS system distributed across many transmission and distribution substations. Are the station batteries located in stations with no network transmission protection schemes (other than UFLS) subject to the requirements of PRC-005-2? This was not addressed in previous revisions. 2. We presently utilize a UVLS system distributed across many transmission and distribution substations. Are the station batteries located in stations with no network transmission protection schemes (other than UVLS) subject to the requirements of PRC-005-2? 3. In the applicability section, there is no exception for smaller units and those with very low capacity factors. Rather, those that "are part of the BES" are in the scope. We recommend that smaller units and low capacity factor units be exempt from the requirements of this standard or have extended maintenance intervals. Refer to the current SERC supplement for PRC-005-1. Section II.A. of the May 29, 2008: SERC Supplement Maintenance & Testing Protection Systems (Transmission, Generation, UFLS, UVLS, & SPS) NERC Reliability Standards PRC-005-1, PRC-008, PRC-011, & PRC-017.The applicability section paragraph 4.2.4 should read "are installed" rather than "is installed". 4. Note 2 at the bottom of the table (1c) implies that one has to apply voltage and inject current into the microprocessor relay to perform trip checks. Is this the intent of the statement? If so, Note 2 should be revised to make clear the intention. We don't think this is necessary with microprocessor relays since they monitor inputs 5. Why is the Violation Severity Level Matrix not a part of this standard revision? 6. In cases where a common dc system exists between a generator owner and transmission owner, who is the responsible entity? 7. We appreciate the work that went into the implementation plan. We agree with the concept of phasing in mandatory compliance

Organization	Question 10 Comment
	and the timing of the implementation. 8. Consider defining the Monitoring Levels once and reformatting the information contained within Tables 1a, 1b, and 1c to regroup the information by component type rather than by Monitor Level. When considering the various monitoring levels for the protection system components, each entity will consider each component type apart from the others when determining the Monitor Level to apply, so this reorganization will assist the end user to understand and apply the levels. See samples attached as a separate document:
Response: The SDT thanks you for your comments. **1. The SDT has modified the standard to clarify that the only DC Supply requirement relevant to UVLS and UFLS is to verify the DC supply voltage, and that this may be performed in conjunction with the UFLS/UVLS maintenance itself.** **2. The SDT has modified the standard to clarify that the only DC Supply requirement relevant to UVLS and UFLS is to verify the DC supply voltage, and that this may be performed in conjunction with the UFLS/UVLS maintenance itself.** **3. This is properly a NERC registration issue and one of the regional BES definitions. We appreciate that you may disagree with these, but you should seek resolution via other means. The SDT has modified the standard in consideration of your editorial concern. It the protection on a small generating unit fails to properly isolate the unit from the system for fault conditions, it could have serious effects on reliability.** **4. Note 2 has been removed from the Table.** **5. Even though the SDT worked on a VSL matrix during development of this draft, the SDT elected to constrain this posting only to the requirements and supporting developments. The SDT believes that this was such an extensive body of material that it would be distracting to include compliance elements. The SDT also recognized that extensive changes were likely to occur to the standard in response to this posting, and considered this in their decision to not include compliance elements. They will be included in the next posting.** **6. The SDT believes that the owner of the battery is responsible. This can be worked out by agreements between the entities.** **7. The SDT thanks you for your support.** **8. The SDT has experimented with various arrangements of the Tables with some input from external parties, and believes that the presentation shown in the standard is the best way to present this complex information. The SDT has attempted to make the arrangement of the three tables as similar as possible to address your concern.**	
PacifiCorp	What is the definition of "Calendar Year"? Does the term "Six calendar years" include any date in 2004 to any date in 2010?
Response: The SDT thanks you for your comments. Disregard the complete date and just look at the year portion. For a 6 calendar-year interval, if the test date was IN 2004, the next test must be completed by the end of 2010.	

Organization	Question 10 Comment
AECI	
Puget Sound Energy	Great improvement in the standards and clarity of expectations. We appreciate the combining of the multiple PRC standards. PSE would appreciate the comments and clarification needed regarding the interpretation for PRC-005 under Project 2009-17 to be included in PRC-005-2. It appears that the interpretation allowed regions to define variances due to the variance in the Regional Entity definitions of the BES. But how the BES is defined and documented as such creates ongoing confusion for the registered entities.
Response: The SDT thanks you for your comments. The NERC definition for BES specifically includes, "As specified by the regions". As long as this definition persists, the issue noted in your comments will also persist. It is outside the scope of this standard to address these issues.	

Standard Development Roadmap

This section is maintained by the drafting team during the development of the standard and will be removed when the standard becomes effective.

Development Steps Completed:

1. Standards Committee approves SAR for posting on June 5, 2007.
2. The SAR was posted for comment from June 11, 2007–July 10, 2007.
3. The SC approves development of the standard on August 13, 2007.
4. First posting of revised standard on July 24, 2009.
5. Second posting of revised standard on June 11, 2010

Description of Current Draft:
This is the second draft of the Standard. This standard merges previous standards PRC-005-1, PRC-008-0, PRC-011-0, and PRC-017-0. It also addresses FERC comments from Order 693, and addresses observations from the NERC System Protection and Control Task Force, as presented in *NERC SPCTF Assessment of Standards: PRC-005-1 — Transmission and Generation Protection System Maintenance and Testing, PRC-008-0 — Underfrequency Load Shedding Equipment Maintenance Programs, PRC-011-0 — UVLS System Maintenance and Testing, PRC-017-0 — Special Protection System Maintenance and Testing.*

Future Development Plan:

Anticipated Actions	Anticipated Date
1. Post for combined pre-ballot review and comment.	June 11–July 16, 2010
2. Conduct initial ballot.	July 8–July 17, 2010
3. Drafting Team Responds to Comments.	July 19–July 22, 2010
4. Post response to comments and modified standard.	July 23, 2010
5. Conduct 10-day recirculation ballot.	July 23–August 2, 2010
6. Present to BOT for action.	August 5, 2010

Definitions of Terms Used in Standard

This section includes all newly defined or revised terms used in the proposed standard. Terms already defined in the Reliability Standards Glossary of Terms are not repeated here. New or revised definitions listed below become approved when the proposed standard is approved. When the standard becomes effective, these defined terms will be removed from the individual standard and added to the Glossary.

Protection System Maintenance Program (PSMP) — An ongoing program by which Protection System components are kept in working order and proper operation of malfunctioning components is restored. A maintenance program for a specific component includes one or more of the following activities:

- Verification — A means of determining that the component is functioning correctly.
- Monitoring — Observation of the routine in-service operation of the component.
- Testing — Application of signals to a component to observe functional performance or output behavior, or to diagnose problems.
- Inspection — To detect visible signs of component failure, reduced performance and degradation.
- Calibration — Adjustment of the operating threshold or measurement accuracy of a measuring element to meet the intended performance requirement.
- Upkeep — Routine activities necessary to assure that the component remains in good working order and implementation of any manufacturer's hardware and software service advisories which are relevant to the application of the device.
- Restoration — The actions to restore proper operation of malfunctioning components.

Protection System (modification) — Protective relays, communication systems necessary for correct operation of protective functions, voltage and current sensing inputs to protective relays and associated circuitry from the voltage and current sensing devices, station dc supply, and control circuitry associated with protective functions from the station dc supply through the trip coil(s) of the circuit breakers or other interrupting devices.

A. Introduction

1. Title: **Protection System Maintenance**

2. Number: PRC-005-2

3. Purpose: To ensure all transmission and generation Protection Systems affecting the reliability of the Bulk Electric System (BES) are maintained.

4. Applicability:

4.1. Functional Entities:

4.1.1 Transmission Owners

4.1.2 Generator Owners

4.1.3 Distribution Providers

4.2. Facilities:

4.2.1 Protection Systems applied on, or designed to provide protection for the BES.

4.2.2 Protection System components used for underfrequency load-shedding systems installed per ERO underfrequency load-shedding requirements.

4.2.3 Protection System components used for undervoltage load-shedding systems installed to prevent system voltage collapse or voltage instability for BES reliability.

4.2.4 Protection System components installed as a Special Protection System for BES reliability.

4.2.5 Protection Systems for generator Facilities that are part of the BES, including:

4.2.5.1 Protection System components that act to trip the generator either directly or via generator lockout or auxiliary tripping relays.

4.2.5.2 Protection Systems for generator step-up transformers for generators that are part of the BES.

4.2.5.3 Protection Systems for transformers connecting aggregated generation, where the aggregated generation is part of the BES (e.g., transformers connecting facilities such as wind-farms to the BES).

4.2.5.4 Protection Systems for generator-connected station service transformers for generators that are part of the BES.

4.2.5.5 Protection Systems for system-connected station service transformers for generators that are part of the BES.

5. (Proposed) Effective Date: See Implementation Plan

B. Requirements

R1. Each Transmission Owner, Generator Owner, and Distribution Provider shall establish a Protection System Maintenance Program (PSMP) for its Protection Systems that use measurements of voltage, current, frequency and/or phase angle to determine anomalies and to

trip a portion of the BES[1] and that are applied on, or are designed to provide protection for the BES. The PSMP shall meet the following criteria: *[Violation Risk Factor: High] [Time Horizon: Long Term Planning]*

1.1. Identify all Protection System components.

1.2. Identify whether each Protection System component is addressed through time-based (per Table 1a), condition-based (per Table 1b or 1c), performance-based (per Attachment A), or a combination of these maintenance methods and identify the associated maintenance interval.

1.3. For each Protection System component, include all maintenance activities specified in Tables 1a, 1b, or 1c associated with the maintenance method used per Requirement 1, Part 1.2.

1.4. Include all batteries associated with the station dc supply component of a Protection System in a time-based program.

R2. Each Transmission Owner, Generator Owner, and Distribution Provider that uses condition-based maintenance intervals in its PSMP for partially or fully monitored Protection Systems shall ensure the components to which the condition-based criteria are applied, possess the monitoring attributes identified in Tables 1b or 1c. *[Violation Risk Factor: Medium] [Time Horizon: Long Term Planning]*

R3. Each Transmission Owner, Generator Owner, and Distribution Provider that uses performance-based maintenance intervals in its PSMP shall follow the procedure established in PRC-005 Attachment A to establish and maintain its performance-based intervals. *[Violation Risk Factor: Medium] [Time Horizon: Long Term Planning]*

R4. Each Transmission Owner, Generator Owner, and Distribution Provider shall implement its PSMP, including identification of the resolution of all maintenance correctable issues[2] as follows: *[Violation Risk Factor: Medium] [Time Horizon: Long Term Planning]*

4.1. For time-based or condition-based maintenance programs, perform, the maintenance activities detailed in Table 1 (for the appropriate monitoring level(s)) for all Protection System components according to the PSMP established per Requirement R1within maximum allowable intervals not to exceed those established in Tables 1a, 1b, and 1c.

4.2. For performance-based maintenance programs, perform, the maintenance activities detailed in Table 1 (for the appropriate monitoring level(s)) for all Protection System components in accordance within the maximum allowable intervals established per Requirement R3.

4.3. Ensure either that the components are within acceptable parameters at the conclusion of the maintenance activities or initiate any necessary activities to correct unresolved maintenance correctable issues[3].

---

[1] Devices that sense non-electrical conditions, such as thermal or transformer sudden pressure relays are not included within the scope of this standard**.**

[2] A maintenance correctable issue is a failure of a device to operate within design parameters that cannot be restored to functional order by repair or calibration while performing the initial on-site maintenance activity, and that requires follow-up corrective action

[3] A maintenance correctable issue is a failure of a device to operate within design parameters that cannot be restored to functional order by repair or calibration while performing the initial on-site maintenance activity and that requires follow-up corrective action.

C. Measures

M1. Each Transmission Owner, Generator Owner and Distribution Provider will have a documented Protection System Maintenance program that addresses protective relays, communication systems necessary for correct operation of protective functions, voltage and current sensing inputs to protective relays and associated circuitry from the voltage and current sensing devices, station dc supply, and control circuitry associated with protective functions from the station dc supply through the trip coil(s) of the circuit breakers or other interrupting devices, as required by Requirement R1. For each protection system component, the documentation shall include the type of maintenance program applied, maintenance activities, and maintenance intervals as specified in Requirement R1, Parts 1.1 through 1.4.

M2. Each Transmission Owner and Generator Owner that uses a condition-based maintenance program should have evidence such as engineering drawings or manufacturer's information showing that the components possess the monitoring attributes identified in Tables 1b or 1c, as required by Requirement R2.

M3. Each Transmission Owner, Generator Owner, or Distribution Provider that uses a performance-based maintenance program should have evidence such as equipment lists, maintenance records, and analysis records and results that its performance-based maintenance program is in accordance with Requirement R3.

M4. Each Transmission Owner, Generator Owner, or Distribution Provider shall have evidence such as maintenance records or maintenance summaries (including dates that the components were maintained) that it has implemented the Protection System Maintenance Program in accordance with Requirement R4.

D. Compliance

1. Compliance Monitoring Process

1.1. Compliance Monitoring Responsibility

Regional Entity

1.2. Compliance Monitoring and Enforcement Processes:

Compliance Audits

Self-Certifications

Spot Checking

Compliance Violation Investigations

Self-Reporting

Complaints

1.3. Data Retention

The Transmission Owner, Generator Owner, and Distribution Provider shall each retain documentation of the two most recent performances of each distinct maintenance activity for the Protection System components, or to the previous on-site audit date, whichever is longer.

The Compliance Enforcement Authority shall keep the last periodic audit report and all requested and submitted subsequent compliance records.

1.4. Additional Compliance Information

None.

2. Violation Severity Levels

Requirement Number	Lower VSL	Moderate VSL	High VSL	Severe VSL
R1	The entity's PSMP included all of the 'types' of components included in the definition of 'Protection System', but, for no more than 5% of the components, failed to either • Identify the component, • Specify whether the component is being addressed by time-based, condition-based, or performance-based maintenance, or • Include all maintenance activities specified in Table 1a, Table 1b, or Table 1c, as applicable.	The entity's PSMP included all of the 'types' of components included in the definition of 'Protection System', but, for greater than 5%, but no more than 10% of the components, failed to either • Identify the component, • Specify whether the component is being addressed by time-based, condition-based, or performance-based maintenance, or • Include all maintenance activities specified in Table 1a, Table 1b, or Table 1c, as applicable.	The entity's PSMP included all of the 'types' of components included in the definition of 'Protection System', but, for greater than 10%, but no more than 15%, of the components, failed to either • Identify the component, • Specify whether the component is being addressed by time-based, condition-based, or performance-based maintenance, or • Include all maintenance activities specified in Table 1a, Table 1b, or Table 1c, as applicable.	The entity's PSMP failed to address one or more of the types of components included in the definition of 'Protection System' OR Entity has not established a PSMP. OR The entity's' PSMP included all of the 'types' of components included in the definition of 'Protection System', but, for more than 15% of the components, failed to either • Identify the component, • Specify whether the component is being addressed by time-based, condition-based, or performance-based maintenance, or • Include all maintenance activities specified in Table 1a, Table 1b, or Table 1c, as applicable.
R2	Entity has Protection System components in a condition-based PSMP, but documentation to support Partially-Monitored Protection System classification or Fully-Monitored Protection System classification is incomplete on no more than 5% of the Protection System components maintained according to Tables 1b and 1c.	Entity has Protection System elements in a condition-based PSMP, but documentation to support Partially-Monitored Protection System classification or Fully-Monitored Protection System classification is incomplete on more than 5%, but 10% or less, of the Protection System components maintained according to Tables 1b	Entity has Protection System elements in a condition-based PSMP, but documentation to support Partially-Monitored Protection System classification or Fully-Monitored Protection System classification is incomplete on more than 10%, but 15% or less, of the Protection System components maintained according to Tables 1b	Entity has Protection System elements in a condition-based PSMP, but documentation to support Partially-Monitored Protection System classification or Fully-Monitored Protection System classification is incomplete on more than 15% of the Protection System components maintained according to Tables 1b and 1c.

Requirement Number	Lower VSL	Moderate VSL	High VSL	Severe VSL
		and 1c.	and 1c.	
R3	Entity has Protection System elements in a performance-based PSMP but has: 1) Failed to reduce countable events to less than 4% within three years. OR 2) Failed to annually document program activities, results, maintenance dates, or countable events for 5% or less of components in any individual segment OR 3) Maintained a segment with 54-59 components or containing different manufacturers.	NA	Entity has Protection System elements in a performance-based PSMP but has failed to reduce countable events to less than 4% within four years.	Entity has Protection System components in a performance-based PSMP but has: 1) Failed to reduce countable events to less than 4% within five years. OR 2) Failed to annually document program activities, results, maintenance dates, or countable events for over 5% of components in any individual segment. OR 3) Maintained a segment with less than 54 components. OR 4) Failed to annually update the list of components, • Perform maintenance on the greater of 5% of the segment population or 3 components, or • Annually analyze the program activities and results for each segment.
R4	Entity has failed to complete scheduled program on 5% or less of total Protection System components.	Entity has failed to complete scheduled program on greater than 5%, but no more than 10% of total Protection System components.	Entity has failed to complete scheduled program on greater than 10%, but no more than 15% of total Protection System components.	Entity has failed to complete scheduled program on greater than 15% of total Protection System components. OR Entity has failed to initiate resolution of maintenance-correctable issues

E. Regional Variances

None

F. Supplemental Reference Documents

The following documents present a detailed discussion about determination of maintenance intervals and other useful information regarding establishment of a maintenance program.

1. PRC-005-2 Protection System Maintenance Supplementary Reference — July 2009.
2. NERC Protection System Maintenance Standard PRC-005-2 FREQUENTLY ASKED QUESTIONS — Practical Compliance and Implementation DRAFT 1.0 — June 2009

Version History

Version	Date	Action	Change Tracking
2	TBD	Complete revision, absorbing maintenance requirements from PRC-005-1, PRC-008-0, PRC-011-0, PRC-017	Complete revision

Table 1a — Time-Based Maintenance — Level 1 Monitoring Maximum Allowable Testing Intervals and Maintenance Activities for Unmonitored Protection System Components **General Description:** Protection System components which do not have self-monitoring alarms, or if self-monitoring alarms are available, the alarms are not transmitted to a location where action can be taken for alarmed failures. **General Maintenance Requirements:** Perform maintenance activities listed and initiate necessary corrective actions in accordance with Requirement R4.		
Type of Protection System Component	**Maximum Maintenance Interval**	**Maintenance Activities**
Protective Relays	6 Calendar Years	Test and calibrate the relays (other than microprocessor relays) with simulated electrical inputs. (Note 1) Verify that settings are as specified. For microprocessor relays, check the relay inputs and outputs that are essential to proper functioning of the Protection System. For microprocessor relays, verify acceptable measurement of power system input values.
Voltage and Current Sensing Inputs to Protective Relays and associated circuitry	12 Calendar Years	Verify proper functioning of the current and voltage **signals** necessary for Protection System operation from the voltage and current sensing devices to the protective relays.
Control and trip circuits with electromechanical trip or auxiliary contacts (except for microprocessor relays, UFLS or UVLS)	6 Calendar Years	Perform a complete functional trip test that includes all sections of the Protection System control and trip circuits, including all electromechanical trip and auxiliary contacts essential to proper functioning of the Protection System.
Control and trip circuits with unmonitored solid-state trip or auxiliary contacts (except for UFLS or UVLS)	12 Calendar Years	Perform a complete functional trip test that includes all sections of the Protection System control and trip circuits, including all solid-state trip and auxiliary contacts (e.g. paths with no moving parts), devices, and connections essential to proper functioning of the Protection System.
Control and trip circuits with electromechanical trip or auxiliary (UFLS/UVLS Systems Only)	6 Calendar Years	Perform a complete functional trip test that includes all sections of the Protection System control and trip circuits, including all electromechanical trip and auxiliary contacts essential to proper functioning of the Protection System, except .that verification does not require actual tripping of circuit breakers or interrupting devices.
Control and trip circuits with unmonitored solid-state trip or auxiliary contacts (UFLS/UVLS Systems Only)	12 Calendar Years	Perform a complete functional trip test that includes all sections of the Protection System control and trip circuit, including all solid-state trip and auxiliary contacts (e.g. paths with no moving parts), devices, and connections essential to proper functioning of the Protection System, except that verification does not require actual tripping of circuit breakers or interrupting devices.

Table 1a — Time-Based Maintenance — Level 1 Monitoring Maximum Allowable Testing Intervals and Maintenance Activities for Unmonitored Protection System Components **General Description:** Protection System components which do not have self-monitoring alarms, or if self-monitoring alarms are available, the alarms are not transmitted to a location where action can be taken for alarmed failures. **General Maintenance Requirements:** Perform maintenance activities listed and initiate necessary corrective actions in accordance with Requirement R4.		
Type of Protection System Component	**Maximum Maintenance Interval**	**Maintenance Activities**
Station dc Supply (used only for UVLS or UFLS)	(when the associated UVLS or UFLS system is maintained)	Verify proper voltage of the dc supply.
Station dc supply	18 Calendar Months	Verify: • State of charge of the individual battery cell/units • Float voltage of battery charger • Battery continuity • Battery terminal connection resistance • Battery cell-to-cell connection resistance Inspect: • Cell condition of all individual battery cells where cells are visible – or measure battery cell/unit internal ohmic values where the cells are not visible • Physical condition of battery rack • The condition of non-battery-based dc supply
Station dc supply (that has as a component any type of battery)	3 Calendar Months	Check: • Electrolyte level (excluding valve-regulated lead acid batteries) • Station dc supply voltage • For unintentional grounds
Station dc supply (that has as a component Valve Regulated Lead-Acid batteries)	3 Calendar Years - or - 3 Calendar Months	Verify that the station battery can perform as designed by conducting a performance or service capacity test of the entire battery bank. (3 calendar years) - or - Verify that the station battery can perform as designed by evaluating the measured cell/unit internal ohmic values to station battery baseline. (3 months)

Table 1a — Time-Based Maintenance — Level 1 Monitoring Maximum Allowable Testing Intervals and Maintenance Activities for Unmonitored Protection System Components **General Description:** Protection System components which do not have self-monitoring alarms, or if self-monitoring alarms are available, the alarms are not transmitted to a location where action can be taken for alarmed failures. **General Maintenance Requirements:** Perform maintenance activities listed and initiate necessary corrective actions in accordance with Requirement R4.		
Type of Protection System Component	**Maximum Maintenance Interval**	**Maintenance Activities**
Station dc supply (that has as a component Vented Lead-Acid Batteries)	6 Calendar Years - or - 18 Calendar Months	Verify that the station battery can perform as designed by conducting a performance, service, or modified performance capacity test of the entire battery bank. (6 calendar years) - or - Verify that the station battery can perform as designed by evaluating the measured cell/unit internal ohmic values to station battery baseline. (18 Months)
Station dc supply (that has as a component Nickel-Cadmium batteries)	6 Calendar Years	Verify that the substation battery can perform as designed by conducting a performance service, or modified performance capacity test of the entire battery bank.
Station dc supply (battery is not used)	6 Calendar Years	Verify that the dc supply can perform as designed when the ac power from the grid is not present.
Station dc Supply (battery is not used)	18 Calendar Months	Verify proper voltage of the station dc supply. Verify that no unintentional dc supply grounds are present. Perform a visual inspection, of all components of the station dc supply to verify that the physical condition of the station dc supply is as desired and any visual inspection if required by the manufacturer on the condition of the dc supply that is the source of dc power when ac power is unavailable. Verify where applicable the proper voltage level of each component of the station dc supply. Verify the correct operation of ac powered dc power supplies. Verify the continuity of all circuit connections that can be affected by wear or corrosion. Inspect all circuit connections that can be affected by wear and corrosion.
Associated communications systems	3 Calendar Months	Verify that the Protection System communications system is functional.
Associated communications systems	6 Calendar Years	Verify that the performance of the channel and the quality of the channel meets performance criteria, such as via measurement of signal level, reflected power, or data error rate. Verify proper functioning of communications equipment inputs and outputs that are essential to proper functioning of the Protection System. Verify the signals to/from the associated protective relay(s).

Table 1a — Time-Based Maintenance — Level 1 Monitoring Maximum Allowable Testing Intervals and Maintenance Activities for Unmonitored Protection System Components **General Description:** Protection System components which do not have self-monitoring alarms, or if self-monitoring alarms are available, the alarms are not transmitted to a location where action can be taken for alarmed failures. **General Maintenance Requirements:** Perform maintenance activities listed and initiate necessary corrective actions in accordance with Requirement R4.		
Type of Protection System Component	**Maximum Maintenance Interval**	**Maintenance Activities**
UVLS and UFLS relays that comprise a protection scheme distributed over the power system	6 Calendar Years	Test and calibrate the relays (other than microprocessor relays) with simulated electrical inputs. (Note 1) Verify proper functioning of the relay trip outputs. For microprocessor relays verify the proper functioning of the A/D converters. Verify that settings are as specified.
Relay sensing for Centralized UFLS or UVLS systems UVLS and UFLS relays that comprise a protection scheme distributed over the power system	See Maintenance Activities	Perform all of the Maintenance activities listed above as established for components of the UFLS or UVLS systems at the intervals established for those individual components. The output action may be breaker tripping, or other control action that must be verified, but may be verified in overlapping segments. A grouped output control action need be verified only once within the specified time interval, but all of the UFLS or UVLS components whose operation leads to that control action must each be verified.
SPS	See Maintenance Activities	Perform all of the Maintenance activities listed above as established for components of the SPS at the intervals established for those individual components. The output action may be breaker tripping, or other control action that must be verified, but may be verified in overlapping segments. A grouped output control action need be verified only once within the specified time interval, but all of the SPS components whose operation leads to that control action must each be verified.

Table 1b — Condition-Based Maintenance - Level 2 Monitoring

Maximum Allowable Testing Intervals and Maintenance Activities for Partially Monitored Protection System Components

General Description: Protection System components whose conditions or alarms are automatically provided daily (or more frequently) to a location where action can be taken for alarmed failures. Detected maintenance-correctable issues for Level 2 Monitored Protection Systems must be reported within 1 day or less of the maintenance-correctable issue occurring, to a location where action can be taken to initiate resolution of the maintenance-correctable issue. Level 2 monitoring includes all monitoring attributes as listed below for the individual type of component.

General Maintenance Requirements: Perform maintenance activities listed and initiate necessary corrective actions in accordance with Requirement R4.

Type of Protection System Component	Level 2 Monitoring Attributes for Component	Maximum Maintenance Interval	Maintenance Activities
Protective Relays	Includes • Internal self diagnosis and alarm capability • Alarm must assert for power supply failures • Input voltage or current waveform sampling three or more times per power cycle • Conversion of samples to numeric values for measurement calculations by microprocessor electronics that are also performing self diagnosis and alarming	12 Calendar Years	Verify the status of relays is normal with no alarms indicated. Verify acceptable measurement of power system input values. For microprocessor relays, check the relay inputs and outputs that are essential to proper functioning of the Protection System. Verify that settings are as specified. Verify that the relay alarms will be received at the location where action can be taken. Verify correct operation of output actions that are used for tripping.
Voltage and Current Sensing Inputs to Protective Relays and associated circuitry	No Level 2 monitoring attributes are defined – use Level 1 Maintenance Activities	12 Calendar Years	Verify the proper functioning of current and voltage circuit signals necessary for Protection System operation from the voltage and current sensing devices to the protective relays.
Control Circuitry (Trip Coils and Auxiliary Relays)	Monitoring and alarming of continuity of trip circuits(s)	6 Calendar Years	Verify that each breaker trip coil, each auxiliary relay, and each lockout relay is electrically operated within this time interval.

Table 1b — Condition-Based Maintenance - Level 2 Monitoring Maximum Allowable Testing Intervals and Maintenance Activities for Partially Monitored Protection System Components **General Description:** Protection System components whose conditions or alarms are automatically provided daily (or more frequently) to a location where action can be taken for alarmed failures. Detected maintenance-correctable issues for Level 2 Monitored Protection Systems must be reported within 1 day or less of the maintenance-correctable issue occurring, to a location where action can be taken to initiate resolution of the maintenance-correctable issue. Level 2 monitoring includes all monitoring attributes as listed below for the individual type of component. **General Maintenance Requirements:** Perform maintenance activities listed and initiate necessary corrective actions in accordance with Requirement R4.			
Type of Protection System Component	**Level 2 Monitoring Attributes for Component**	**Maximum Maintenance Interval**	**Maintenance Activities**
Control Circuitry (Trip Circuits) (except for UFLS/UVLS)	Monitoring of Protection System component inputs, outputs, and connections with reporting of monitoring alarms to a location where action can be taken Connection paths using electronic signals or data messages are monitored by periodic signal changes or messages that verify ability to convey Protection System operating values	12 Calendar Years	Verify that the alarms will be received at the location where action can be taken.
Control and trip circuitry	Monitoring of the continuity of breaker trip circuits along with the presence of tripping voltage supply all the way from relay terminals (or from inside the relay) through to the trip coil(s), including any auxiliary contacts essential to proper Protection System operation. If a trip circuit comprises multiple paths, each of the paths must be monitored, including monitoring of the operating coil circuit(s) and the tripping circuits of auxiliary tripping relays and lockout relays. Alarming for loss of continuity or dc supply for trip circuits is reported to a location where action can be taken.	12 Calendar Years	Verify that the alarms will be received at the location where action can be taken.

Table 1b — Condition-Based Maintenance - Level 2 Monitoring

Maximum Allowable Testing Intervals and Maintenance Activities for Partially Monitored Protection System Components

General Description: Protection System components whose conditions or alarms are automatically provided daily (or more frequently) to a location where action can be taken for alarmed failures. Detected maintenance-correctable issues for Level 2 Monitored Protection Systems must be reported within 1 day or less of the maintenance-correctable issue occurring, to a location where action can be taken to initiate resolution of the maintenance-correctable issue. Level 2 monitoring includes all monitoring attributes as listed below for the individual type of component.

General Maintenance Requirements: Perform maintenance activities listed and initiate necessary corrective actions in accordance with Requirement R4.

Type of Protection System Component	Level 2 Monitoring Attributes for Component	Maximum Maintenance Interval	Maintenance Activities
Station dc supply	Monitor and alarm for: • Station dc supply voltage • Unintentional dc grounds • Electrolyte level of all cells in a station battery • Individual battery cell/unit state of charge • Battery continuity of station battery • Cell-to-cell and battery terminal resistance	6 Calendar Years	Verify that the monitoring devices are calibrated (where necessary) and alarms will be received at the location where action can be taken.
Station dc supply	No Level 2 monitoring attributes are defined – use Level 1 Maintenance Activities	18 Calendar Months	Inspect: • Cell condition of individual battery cells where cells are visible, or measure battery cell/unit internal ohmic values where cells are not visible • Physical condition of battery rack • The condition of non-battery based dc supply
Station dc supply (that has as a component Valve Regulated Lead-Acid batteries)	No Level 2 monitoring attributes are defined – use Level 1 Maintenance Activities	3 Calendar Years - or - 3 Calendar Months	Verify that the station battery can perform as designed by conducting a performance or service capacity test of the entire battery bank. (3 calendar years) - or - Verify that the station battery can perform as designed by evaluating the measured cell/unit internal ohmic values to station battery baseline. (3 months)

Table 1b — Condition-Based Maintenance - Level 2 Monitoring

Maximum Allowable Testing Intervals and Maintenance Activities for Partially Monitored Protection System Components

General Description: Protection System components whose conditions or alarms are automatically provided daily (or more frequently) to a location where action can be taken for alarmed failures. Detected maintenance-correctable issues for Level 2 Monitored Protection Systems must be reported within 1 day or less of the maintenance-correctable issue occurring, to a location where action can be taken to initiate resolution of the maintenance-correctable issue. Level 2 monitoring includes all monitoring attributes as listed below for the individual type of component.

General Maintenance Requirements: Perform maintenance activities listed and initiate necessary corrective actions in accordance with Requirement R4.

Type of Protection System Component	Level 2 Monitoring Attributes for Component	Maximum Maintenance Interval	Maintenance Activities
Station dc supply (that has as a component Vented Lead-Acid batteries)	No Level 2 monitoring attributes are defined – use Level 1 Maintenance Activities	6 Calendar Years - or - 18 Calendar Months	Verify that the substation battery can perform as designed by conducting a performance service, or modified performance capacity test of the entire battery bank. (6 calendar years) - or - Verify that the station battery can perform as designed by evaluating the measured cell/unit internal ohmic values to station battery baseline. (18 Months)
Station dc supply (that has as a component Nickel-Cadmium batteries)	No Level 2 monitoring attributes are defined – use Level 1 Maintenance Activities	6 Calendar Years	Verify that the substation battery can perform as designed by conducting a performance service, or modified performance capacity test of the entire battery bank.
Station dc Supply (battery is not used)	No Level 2 monitoring attributes are defined – use Level 1 Maintenance Activities	6 Calendar Years	Verify that the dc supply can perform as designed **when ac power** from the grid is not present.
Associated communications system	Monitoring and alarming of protection communications system by mechanisms that check for presence of the communications channel.	12 Calendar Years	Verify that the performance of the channel and the quality of the channel meets performance criteria, such as via measurement of signal level, reflected power, or data error rate. Verify proper functioning of communications equipment inputs and outputs that are essential to proper functioning of the Protection System. Verify the signals to/from the associated protective relay(s). Verify proper functioning of alarm notification.

Table 1b — Condition-Based Maintenance - Level 2 Monitoring Maximum Allowable Testing Intervals and Maintenance Activities for Partially Monitored Protection System Components **General Description:** Protection System components whose conditions or alarms are automatically provided daily (or more frequently) to a location where action can be taken for alarmed failures. Detected maintenance-correctable issues for Level 2 Monitored Protection Systems must be reported within 1 day or less of the maintenance-correctable issue occurring, to a location where action can be taken to initiate resolution of the maintenance-correctable issue. Level 2 monitoring includes all monitoring attributes as listed below for the individual type of component. **General Maintenance Requirements:** Perform maintenance activities listed and initiate necessary corrective actions in accordance with Requirement R4.			
Type of Protection System Component	**Level 2 Monitoring Attributes for Component**	**Maximum Maintenance Interval**	**Maintenance Activities**
UVLS and UFLS relays that comprise a protection scheme distributed over the power system	Includes internal self diagnosis and alarm capability, which must assert for power supply failures. Includes input voltage or current waveform sampling three or more times per power cycle, and conversion of samples to numeric values for measurement calculations by microprocessor electronics that are also performing self diagnosis and alarming.	12 Calendar Years	Verify the status of relays as in service with no alarms. Verify acceptable measurement of power system input values the proper function of the A/D converters (if included in relay). Verify proper functioning of the relay trip outputs. Verify that settings are as specified. Verify that the relay alarms will be received at the location where action can be taken.
Relay sensing for centralized UFLS or UVLS systems	See the attributes of Level 2 Monitoring for the individual components of the SPS	See Maintenance Intervals for the individual components of the UFLS/UVLS	Perform all of the Maintenance activities listed above as established for components of the UFLS or UVLS systems at the intervals established for those individual components. The output action may be breaker tripping, or other control action that must be verified, but may be verified in overlapping segments. A grouped output control action need be verified only once within the specified time interval, but all of the UFLS or UVLS components whose operation leads to that control action must each be verified.
SPS	See the attributes of Level 2 Monitoring for the individual components of the SPS	See Maintenance Intervals for the individual components of the SPS	Perform all of the Maintenance activities listed above as established for components of the SPS, at the intervals established for those individual components. The output action may be breaker tripping, or other control action that must be verified, but may be verified in overlapping segments. A grouped output control action need be verified only once within the specified time interval, but all of the SPS components whose operation leads to that control action must each be verified.

Table 1c — Condition-based Maintenance — Level 3 Monitoring

Maximum Allowable Testing Intervals and Maintenance Activities for Fully Monitored Protection System Components

General Description: Protection System components in which every function required for correct operation of that component is continuously monitored and verified, and detected maintenance-correctable issues reported. Level 3 Monitored Protection Systems also includes verification of the means by which alarms and monitored values are transmitted to a location where action can be taken. Detected maintenance-correctable issues for Level 3 Monitored Protection Systems must be reported within 1 hour or less of the maintenance-correctable issue occurring, to a location where action can be taken to initiate resolution of the maintenance-correctable issue. Level 3 Monitoring includes all attributes of Level 2 Monitoring, with additional monitoring attributes as listed below for the individual type of component.

General Maintenance Requirements: Perform maintenance activities listed and initiate necessary corrective actions in accordance with Requirement R4.

Type of Protection System Component	Level 3 Monitoring Attributes for Component	Maximum Maintenance Interval	Maintenance Activities
Protective Relays	Relay A/D converters are continuously monitored and alarmed	Continuous	Continuous verification of the status of the relays Alarm on change of settings
Protective Relays with trip contacts	All Level attributes, except relay possesses mechanical output contacts	12 Calendar Years	Verify proper functioning of the relay trip contacts.
Voltage and Current Sensing Inputs to Protective Relays and associated circuitry	Verification of the analog values (magnitude and phase angle) measured by the microprocessor relay or comparable device, by comparing against other measurements using other voltage and current sensing devices	Continuous	Continuous verification and comparison of the current and voltage signals from the voltage and current sensing devices of the Protection System
Protection System control and trip circuitry	Monitoring and alarming of the alarm path itself	Continuous	Continuous verification of the status of the monitored control circuits
Station dc supply	No Level 3 monitoring attributes are defined – use Level 1 Maintenance Activities and intervals	18 Calendar Months	Inspect: • Cell condition of all individual battery cells where cells are visible – or measure battery cell/unit internal ohmic values where the cells are not visible • Physical condition of battery rack • The condition of non-battery-based dc supply

Table 1c — Condition-based Maintenance — Level 3 Monitoring

Maximum Allowable Testing Intervals and Maintenance Activities for Fully Monitored Protection System Components

General Description: Protection System components in which every function required for correct operation of that component is continuously monitored and verified, and detected maintenance-correctable issues reported. Level 3 Monitored Protection Systems also includes verification of the means by which alarms and monitored values are transmitted to a location where action can be taken. Detected maintenance-correctable issues for Level 3 Monitored Protection Systems must be reported within 1 hour or less of the maintenance-correctable issue occurring, to a location where action can be taken to initiate resolution of the maintenance-correctable issue. Level 3 Monitoring includes all attributes of Level 2 Monitoring, with additional monitoring attributes as listed below for the individual type of component.

General Maintenance Requirements: Perform maintenance activities listed and initiate necessary corrective actions in accordance with Requirement R4.

Type of Protection System Component	Level 3 Monitoring Attributes for Component	Maximum Maintenance Interval	Maintenance Activities
Station dc supply (that has as a component Valve Regulated Lead-Acid batteries)	No Level 3 monitoring attributes are defined – use Level 1 Maintenance Activities and intervals	3 Calendar Years - or - 3 Calendar Months	Verify that the station battery can perform as designed by conducting a performance or service capacity test of the entire battery bank. (3 calendar years) - or - Verify that the station battery can perform as designed by evaluating the measured cell/unit internal ohmic values to station battery baseline. (3 months)
Station dc supply (that has as a component Vented Lead-Acid Batteries)	No Level 3 monitoring attributes are defined – use Level 1 Maintenance Activities and intervals	6 Calendar Years - or - 18 Calendar Months	Verify that the station battery can perform as designed by conducting a performance service, or modified performance capacity test of the entire battery bank. (6 calendar years) - or - Verify that the station battery can perform as designed by evaluating the measured cell/unit internal ohmic values to station battery baseline. (18 Months)
Station dc supply (that has as a component Nickel-Cadmium batteries)	No Level 3 monitoring attributes are defined – use Level 1 Maintenance Activities and intervals	6 Calendar Years	Verify that the substation battery can perform as designed by conducting a performance service, or modified performance capacity test of the entire battery bank.
Station dc Supply (any battery technology)	Monitoring and alarming for station dc supply voltage, unintentional dc grounds, electrolyte level of all cells of a station battery, individual battery cell/unit state of charge, battery continuity of station battery and cell-to-cell and battery terminal resistance	Continuous	Continuous monitoring of station dc supply voltage, unintentional dc grounds, electrolyte level of all cells of a station battery, individual battery cell/unit state of charge, battery continuity of station battery and cell-to-cell and battery terminal resistance are provided with alarming to remote location upon any failure of the monitoring device or when sensors for the devises are out of calibration.

Table 1c — Condition-based Maintenance — Level 3 Monitoring

Maximum Allowable Testing Intervals and Maintenance Activities for Fully Monitored Protection System Components

General Description: Protection System components in which every function required for correct operation of that component is continuously monitored and verified, and detected maintenance-correctable issues reported. Level 3 Monitored Protection Systems also includes verification of the means by which alarms and monitored values are transmitted to a location where action can be taken. Detected maintenance-correctable issues for Level 3 Monitored Protection Systems must be reported within 1 hour or less of the maintenance-correctable issue occurring, to a location where action can be taken to initiate resolution of the maintenance-correctable issue. Level 3 Monitoring includes all attributes of Level 2 Monitoring, with additional monitoring attributes as listed below for the individual type of component.

General Maintenance Requirements: Perform maintenance activities listed and initiate necessary corrective actions in accordance with Requirement R4.

Type of Protection System Component	Level 3 Monitoring Attributes for Component	Maximum Maintenance Interval	Maintenance Activities
Station dc Supply which do not use a station battery	No Level 3 monitoring attributes are defined – use Level 1 Maintenance Activities and intervals	6 Calendar Years	Verify that the dc supply can perform as designed when the ac power from the grid is not present.
Associated communications systems	Evaluating the performance of the channel and its interface to protective relays to determine the quality of the channel and alarming if the channel does not meet performance criteria	Continuous	Continuous verification that the performance and quality of the channel meets performance criteria is provided. Continuous verification of the communications equipment alarm system is provided.
UVLS and UFLS relays that comprise a protection scheme distributed over the power system.	The relay A/D converters are continuously monitored and alarmed.	Continuous	Continuous verification of the status of the relays Alarm on change of settings Verification does not require actual tripping of circuit breakers or interrupting devices
Relay sensing for centralized UFLS or UVLS systems.	See the attributes of Level 3 Monitoring for the individual components of the UFLS/UVLS	See Maintenance Activities	Perform all of the Maintenance activities listed above as established for components of the UFLS or UVLS systems at the intervals established for those individual components. The output action may be breaker tripping, or other control action that must be verified, but may be verified in overlapping segments. A grouped output control action need be verified only once within the specified time interval, but all of the UFLS or UVLS components whose operation leads to that control action must each be verified.

Table 1c — Condition-based Maintenance — Level 3 Monitoring Maximum Allowable Testing Intervals and Maintenance Activities for Fully Monitored Protection System Components **General Description:** Protection System components in which every function required for correct operation of that component is continuously monitored and verified, and detected maintenance-correctable issues reported. Level 3 Monitored Protection Systems also includes verification of the means by which alarms and monitored values are transmitted to a location where action can be taken. Detected maintenance-correctable issues for Level 3 Monitored Protection Systems must be reported within 1 hour or less of the maintenance-correctable issue occurring, to a location where action can be taken to initiate resolution of the maintenance-correctable issue. Level 3 Monitoring includes all attributes of Level 2 Monitoring, with additional monitoring attributes as listed below for the individual type of component. **General Maintenance Requirements:** Perform maintenance activities listed and initiate necessary corrective actions in accordance with Requirement R4.			
Type of Protection System Component	**Level 3 Monitoring Attributes for Component**	**Maximum Maintenance Interval**	**Maintenance Activities**
SPS	See the attributes of Level 3 Monitoring for the individual components of the SPS	See Maintenance Activities	Perform all of the Maintenance activities listed above as established for components of the SPS at the intervals established for those individual components. The output action may be breaker tripping, or other control action that must be verified, but may be verified in overlapping segments. A grouped output control action need be verified only once within the specified time interval, but all of the SPS components whose operation leads to that control action must each be verified.

Notes for Table 1a, Table 1b, and Table 1c

1. For some Protection System components, adjustment is required to bring measurement accuracy within parameters established by the asset owner based on the specific application of the component. A calibration failure is the result if testing finds the specified parameters to be out of tolerance.

PRC-005 — Attachment A

Criteria for a Performance-Based Protection System Maintenance Program

Purpose: To establish a technical basis for initial and continued use of a performance-based Protection System Maintenance Program (PSMP).

Segment: In this procedure, the term, "segment" is a grouping of Protection Systems or components from a single manufacturer, with common factors such that consistent performance is expected across the entire population of the segment, and shall only be defined for a population of 60 or more individual components.[4]

To establish the technical justification for the initial use of a performance-based PSMP:

1. Develop a list with a description of components included in each designated segment of the Protection System component population.
2. Maintain the components in each segment according to the time-based maximum allowable intervals established in Table 1 until results of maintenance activities for the segment are available for a minimum of 30 individual components of the segment.
3. Document the maintenance program activities and results for each segment, including maintenance dates and countable events[5] for each included component.
4. Analyze the maintenance program activities and results for each segment to determine the overall performance of the segment and develop maintenance intervals.
5. Determine the maximum allowable maintenance interval for each segment such that the segment experiences countable events on no more than 4% of the components within the segment, for the greater of either the last 30 components maintained or all components maintained in the previous year.

To maintain the technical justification for the ongoing use of a performance-based PSMP:

1. At least annually, update the list of Protection System components and segments and/or description if any changes occur within the segment.
2. Perform maintenance on the greater of 5% of the components (addressed in the performance based PSMP) in each segment or 3 individual components within the segment in each year.
3. For the prior year, analyze the maintenance program activities and results for each segment to determine the overall performance of the segment.
4. If the components in a Protection System segment maintained through a performance-based PSMP experience 4% or more countable events, develop, document, and

[4] Entities with smaller populations of component devices may aggregate their populations to define a segment and shall share all attributes of a single performance-based program for that segment.

[5] Countable events include any failure of a component requiring repair or replacement, any condition discovered during the verification activities in Table 1a through Table 1c which requires corrective action, or a Misoperation attributed to hardware failure or calibration failure.

implement an action plan to reduce the countable events to less than 4% of the segment population within 3 years.

5. Using the prior year's data, determine the maximum allowable maintenance interval for each segment such that the segment experiences countable events on no more than 4% of the components within the segment, for the greater of either the last 30 components maintained or all components maintained in the previous year.

Standard Development Roadmap

This section is maintained by the drafting team during the development of the standard and will be removed when the standard becomes effective.

Development Steps Completed:

1. Standards Committee approves SAR for posting on June 5, 2007.
2. The SAR was posted for comment from June 11, 2007–July 10, 2007.
3. The SC approves development of the standard on August 13, 2007.
4. First posting of revised standard on July 24, 2009.
5. Second posting of revised standard on June 11, 2010

Description of Current Draft:
This is the second draft of the Standard. This standard merges previous standards PRC-005-1, PRC-008-0, PRC-011-0, and PRC-017-0. It also addresses FERC comments from Order 693, and addresses observations from the NERC System Protection and Control Task Force, as presented in *NERC SPCTF Assessment of Standards: PRC-005-1 — Transmission and Generation Protection System Maintenance and Testing, PRC-008-0 — Underfrequency Load Shedding Equipment Maintenance Programs, PRC-011-0 — UVLS System Maintenance and Testing, PRC-017-0 — Special Protection System Maintenance and Testing.*

Future Development Plan:

Anticipated Actions	Anticipated Date
1. Post for combined pre-ballot review and comment.	June 11–July 16, 2010
2. Conduct initial ballot.	July 8–July 17, 2010
3. Drafting Team Responds to Comments.	July 19–July 22, 2010
4. Post response to comments and modified standard.	July 23, 2010
5. Conduct 10-day recirculation ballot.	July 23–August 2, 2010
6. Present to BOT for action.	August 5, 2010

Definitions of Terms Used in Standard

This section includes all newly defined or revised terms used in the proposed standard. Terms already defined in the Reliability Standards Glossary of Terms are not repeated here. New or revised definitions listed below become approved when the proposed standard is approved. When the standard becomes effective, these defined terms will be removed from the individual standard and added to the Glossary.

Protection System Maintenance Program (PSMP) — An ongoing program by which Protection System components are kept in working order and proper operation of malfunctioning components is restored. A maintenance program ~~can include:~~for a specific component includes one or more of the following activities:

- Verification — A means of determining that the component is functioning correctly.
- Monitoring — Observation of the routine in-service operation of the component.
- Testing — Application of signals to a component to observe functional performance or output behavior, or to diagnose problems.
- ~~Physical i~~Inspection — To detect visible signs of component failure, reduced performance and degradation.
- Calibration — Adjustment of the operating threshold or measurement accuracy of a measuring element to meet the intended performance requirement.
- Upkeep — Routine activities necessary to assure that the component remains in good working order and implementation of any manufacturer's hardware and software service advisories which are relevant to the application of the device.
- Restoration — The actions to restore proper operation of malfunctioning components.

Protection System (modification) — Protective relays, communication systems necessary for correct operation of protective ~~devices~~functions, voltage and current sensing inputs to protective relays~~,~~ and associated circuitry from the voltage and current sensing devices, station ~~DC~~ dc supply, and ~~DC~~ control circuitry associated with protective functions from the station ~~DC~~ dc supply through the trip coil(s) of the circuit breakers or other interrupting devices.

A. Introduction

1. Title: **Protection System Maintenance**

2. Number: PRC-005-2

3. Purpose: To ensure all transmission and generation Protection Systems affecting the reliability of the Bulk Electric System (BES) are maintained.

4. Applicability:

4.1. Functional Entities:

4.1.1 Transmission Owners

4.1.2 Generator Owners

4.1.3 Distribution Providers

4.2. Facilities:

4.2.1 Protection Systems ~~that are~~ applied on, or ~~are~~ designed to provide protection for the BES.

4.2.2 Protection System components used for underfrequency load-shedding systems ~~which are~~ installed per ERO underfrequency load-shedding requirements.

4.2.3 Protection System components used for undervoltage load-shedding systems ~~which are~~ installed to prevent system voltage collapse or voltage instability for BES reliability.

4.2.4 Protection System components ~~which is~~ installed as a Special Protection System for BES reliability.

4.2.5 Protection Systems for ~~Generator~~generator Facilities that are part of the BES, including:

4.2.5.1 Protection ~~system~~System components that act to trip the generator either directly or via generator lockout or auxiliary tripping relays.

4.2.5.2 ~~-~~Protection ~~systems~~Systems for generator step-up transformers for generators that are part of the BES.

4.2.5.3 Protection ~~systems~~Systems for transformers connecting aggregated generation, where the aggregated generation is part of the BES (e.g., transformers connecting facilities such as wind-farms to the BES).

4.2.5.4 Protection ~~systems~~Systems for generator-connected station service transformers for generators that are part of the BES.

4.2.5.5 Protection ~~systems~~Systems for system-connected station service transformers for generators that are part of the BES.

~~**5.**~~

5. (Proposed) Effective Date: ~~**TBD**~~ ~~To Be Determined~~See Implementation Plan

B. Requirements

R1. Each Transmission Owner, Generator Owner, and Distribution Provider shall establish a Protection System Maintenance Program (PSMP) for its Protection Systems that use

measurements of voltage, current, frequency and/or phase angle to determine anomalies and to trip a portion of the BES[1] and that are applied on, or are designed to provide protection for the BES. The PSMP shall meet the following criteria: *[Violation Risk Factor: ~~TBD~~High] [Time Horizon: Long Term Planning]*

~~**1.1.** For each component used in each Protection System, include all maintenance activities specified in Tables 1a, 1b, and 1c.~~

1.1. Identify all Protection System components.

1.2. Identify whether each Protection System component is addressed through time-based (per Table 1a), condition-based (per Table 1b or 1c), performance-based (per Attachment A), or a combination of these maintenance methods and identify the associated maintenance interval.

1.3. For each Protection System component, include all maintenance activities specified in Tables 1a, 1b, or 1c associated with the maintenance method used per Requirement 1, Part 1.2.

~~**1.3.**~~**1.4.** Include all batteries associated with the station dc supply component of a Protection System in a time-based program.

R2. Each Transmission Owner, Generator Owner, and Distribution Provider that uses condition-based maintenance intervals in its PSMP for partially or fully monitored Protection Systems shall ensure the components to which the condition-based criteria are applied, ~~(as specified in Tables 1b or 1c),~~ possess the ~~necessary~~ monitoring attributes identified in Tables 1b or 1c. *[Violation Risk Factor: ~~TBD~~Medium] [Time Horizon: Long Term Planning]*

R3. Each Transmission Owner, Generator Owner, and Distribution Provider that uses performance-based maintenance intervals in its PSMP shall follow the procedure established in PRC-005 Attachment A to establish and maintain its performance-based intervals. *[Violation Risk Factor: ~~TBD~~Medium] [Time Horizon: Long Term Planning]*

R4. Each Transmission Owner, Generator Owner, and Distribution Provider shall implement its PSMP, including identification of the resolution of all maintenance ~~correctible~~correctable issues[2] as follows: *[Violation Risk Factor: ~~TBD~~Medium] [Time Horizon: Long Term Planning]*

4.1. For time-based or condition-based maintenance programs, perform, the ~~Maintenance~~ maintenance activities detailed in Table 1 (for the appropriate monitoring level(s)) for all Protection System components ~~within~~according to ~~your~~the PSMP established per Requirement R1within maximum allowable intervals not to exceed those established in Tables 1a, 1b, and 1c.

4.2. For performance-based maintenance programs, perform, the maintenance activities detailed in Table 1 (for the appropriate monitoring level(s)) for all Protection System

[1] Devices that sense non-electrical conditions, such as thermal or transformer sudden pressure relays are not included within the scope of this standard.

[2] A maintenance correctable issue is a failure of a device to operate within design parameters that cannot be restored to functional order by repair or calibration~~, repair or replacement.~~ while performing the initial on-site maintenance activity, and that requires follow-up corrective action

components in accordance within the maximum allowable intervals established per Requirement R3.

4.3. Ensure either that the components are within acceptable parameters at the conclusion of the maintenance activities or initiate any necessary activities to correct unresolved maintenance correctable issues[3].

C. Measures~~(TBD)~~

M1. Each Transmission Owner, Generator Owner and Distribution Provider will have a documented Protection System Maintenance program that addresses protective relays, communication systems necessary for correct operation of protective functions, voltage and current sensing inputs to protective relays and associated circuitry from the voltage and current sensing devices, station dc supply, and control circuitry associated with protective functions from the station dc supply through the trip coil(s) of the circuit breakers or other interrupting devices, as required by Requirement R1. For each protection system component, the documentation shall include the type of maintenance program applied, maintenance activities, and maintenance intervals as specified in Requirement R1, Parts 1.1 through 1.4.

M2. Each Transmission Owner and Generator Owner that uses a condition-based maintenance program should have evidence such as engineering drawings or manufacturer's information showing that the components possess the monitoring attributes identified in Tables 1b or 1c, as required by Requirement R2.

M3. Each Transmission Owner, Generator Owner, or Distribution Provider that uses a performance-based maintenance program should have evidence such as equipment lists, maintenance records, and analysis records and results that its performance-based maintenance program is in accordance with Requirement R3.

M4. Each Transmission Owner, Generator Owner, or Distribution Provider shall have evidence such as maintenance records or maintenance summaries (including dates that the components were maintained) that it has implemented the Protection System Maintenance Program in accordance with Requirement R4.

~~C.~~D. Compliance

1. Compliance Monitoring Process

1.1. Compliance Monitoring Responsibility

Regional Entity

~~**1.2. Compliance Monitoring Period and Reset Time Frame**~~

~~**1.3.**~~**1.2.** ~~Not Applicable~~**Compliance Monitoring and Enforcement Processes:**

Compliance Audits

Self-Certifications

Spot Checking

Compliance Violation Investigations

Self-Reporting

Complaints

[3] A maintenance correctable issue is a failure of a device to operate within design parameters that cannot be restored to functional order by repair or calibration while performing the initial on-site maintenance activity and that requires follow-up corrective action.

~~1.4.~~1.3. Data Retention

The Transmission Owner, Generator Owner, and Distribution Provider shall each retain documentation ~~for~~ of the two most recent performances of each distinct maintenance ~~intervals~~activity for the Protection System components, or to the previous on-site audit date, whichever is longer.

~~or for the time period specified above, whichever is longer~~The Compliance Enforcement Authority shall keep the last periodic audit report and all requested and submitted subsequent compliance records.

~~1.5.~~1.4. Additional Compliance Information

None.

~~2.~~

2. Violation Severity Levels ~~TBD~~

Requirement Number	Lower VSL	Moderate VSL	High VSL	Severe VSL
R1	The entity's PSMP included all of the 'types' of components included in the definition of 'Protection System', but, for no more than 5% of the components, failed to either • Identify the component, • Specify whether the component is being addressed by time-based, condition-based, or performance-based maintenance, or • Include all maintenance activities specified in Table 1a, Table 1b, or Table 1c, as applicable.	The entity's PSMP included all of the 'types' of components included in the definition of 'Protection System', but, for greater than 5%, but no more than 10% of the components, failed to either • Identify the component, • Specify whether the component is being addressed by time-based, condition-based, or performance-based maintenance, or • Include all maintenance activities specified in Table 1a, Table 1b, or Table 1c, as applicable.	The entity's PSMP included all of the 'types' of components included in the definition of 'Protection System', but, for greater than 10%, but no more than 15%, of the components, failed to either • Identify the component, • Specify whether the component is being addressed by time-based, condition-based, or performance-based maintenance, or • Include all maintenance activities specified in Table 1a, Table 1b, or Table 1c, as applicable.	The entity's PSMP failed to address one or more of the types of components included in the definition of 'Protection System' OR Entity has not established a PSMP. OR The entity's' PSMP included all of the 'types' of components included in the definition of 'Protection System', but, for more than 15% of the components, failed to either • Identify the component, • Specify whether the component is being addressed by time-based, condition-based, or performance-based maintenance, or • Include all maintenance activities specified in Table 1a, Table 1b, or Table 1c, as applicable.
R2	Entity has Protection System components in a condition-based PSMP, but documentation to support Partially-Monitored Protection System classification or Fully-Monitored Protection System classification is incomplete on no more than 5% of the	Entity has Protection System elements in a condition-based PSMP, but documentation to support Partially-Monitored Protection System classification or Fully-Monitored Protection System classification is incomplete on more	Entity has Protection System elements in a condition-based PSMP, but documentation to support Partially-Monitored Protection System classification or Fully-Monitored Protection System classification is incomplete on more	Entity has Protection System elements in a condition-based PSMP, but documentation to support Partially-Monitored Protection System classification or Fully-Monitored Protection System classification is incomplete on more

Requirement Number	Lower VSL	Moderate VSL	High VSL	Severe VSL
	Protection System components maintained according to Tables 1b and 1c.	than 5%, but 10% or less, of the Protection System components maintained according to Tables 1b and 1c.	than 10%, but 15% or less, of the Protection System components maintained according to Tables 1b and 1c.	than 15% of the Protection System components maintained according to Tables 1b and 1c.
R3	Entity has Protection System elements in a performance-based PSMP but has: 1) Failed to reduce countable events to less than 4% within three years. OR 2) Failed to annually document program activities, results, maintenance dates, or countable events for 5% or less of components in any individual segment OR 3) Maintained a segment with 54-59 components or containing different manufacturers.	NA	Entity has Protection System elements in a performance-based PSMP but has failed to reduce countable events to less than 4% within four years.	Entity has Protection System components in a performance-based PSMP but has: 1) Failed to reduce countable events to less than 4% within five years. OR 2) Failed to annually document program activities, results, maintenance dates, or countable events for over 5% of components in any individual segment. OR 3) Maintained a segment with less than 54 components. OR 4) Failed to annually update the list of components, • Perform maintenance on the greater of 5% of the segment population or 3 components, or • Annually analyze the program activities and results for each segment.
R4	Entity has failed to complete scheduled program on 5% or less of total	Entity has failed to complete scheduled program on greater than	Entity has failed to complete scheduled program on greater than	Entity has failed to complete scheduled program on greater than

Requirement Number	Lower VSL	Moderate VSL	High VSL	Severe VSL
	Protection System components.	5%, but no more than 10% of total Protection System components.	10%, but no more than 15% of total Protection System components.	15% of total Protection System components. OR Entity has failed to initiate resolution of maintenance-correctable issues

~~D.~~E. Regional ~~Differences~~Variances

None

~~E.~~F. Supplemental Reference Documents

The following documents present a detailed discussion about determination of maintenance intervals and other useful information regarding establishment of a maintenance program.

1. ~~1.~~ PRC-005-2 Protection System Maintenance Supplementary Reference ~~-~~ July 2009.
2. ~~-~~NERC Protection System Maintenance Standard PRC-005-2 FREQUENTLY ASKED QUESTIONS ~~-~~ Practical Compliance and Implementation DRAFT 1.0 ~~-~~ June 2009

Version History

Version	Date	Action	Change Tracking
2	TBD	Complete revision, absorbing maintenance requirements from PRC-005-1, PRC-008-0, PRC-011-0, PRC-017	Complete revision

Table 1a — Time-Based Maintenance — Level 1 Monitoring Maximum Allowable Testing Intervals and Maintenance Activities for Unmonitored Protection ~~Systems~~System Components **General Description:** Protection System components which do not have self-monitoring alarms, or if self-monitoring alarms are available, the alarms are not transmitted to a location where action can be taken for alarmed failures. **General Maintenance Requirements:** Perform maintenance activities listed and initiate necessary corrective actions in accordance with Requirement R4.		
Type of Protection System Component	**Maximum Maintenance Interval**	**Maintenance Activities**
Protective Relays	6 Calendar Years	Test and calibrate the relays (other than microprocessor relays) with simulated electrical inputs. (Note 1) Verify ~~proper functioning of the relay trip outputs~~that settings are as specified. For microprocessor relays ~~verify~~ , check the relay inputs and outputs that are essential to proper functioning of the ~~A/D converters (Note 2)~~Protection System. ~~**Verify that settings are as specified.**~~ For microprocessor relays, verify acceptable measurement of power system input values.
Voltage and Current Sensing ~~Devices~~ ~~-~~Inputs to Protective Relays and associated circuitry	12 Calendar Years	Verify proper functioning of the current and voltage ~~**circuit inputs**~~ signals necessary for Protection System operation from the voltage and current sensing devices to the protective relays.
~~Protection System~~ Control ~~Circuitry (Breaker Trip Coil Only)~~and trip circuits with electromechanical trip or auxiliary contacts (except for microprocessor relays, UFLS or UVLS)	6 Calendar Years~~3 Months~~	~~Verify the continuity of the breaker trip circuit including trip coil (except for protection system control circuitry associated with breakers that remain open for the entire "maintenance interval" period").~~ Perform a complete functional trip test that includes all sections of the Protection System control and trip circuits, including all electromechanical trip and auxiliary contacts essential to proper functioning of the Protection System.
~~Protection System~~ Control ~~Circuitry (Trip Circuits)~~and trip circuits with unmonitored solid-state trip or auxiliary contacts (except for UFLS or UVLS)	~~6~~12 Calendar Years	Perform a complete functional trip test that includes all sections of the Protection System control and trip ~~circuit~~circuits, including all solid-state trip and auxiliary contacts (e.g. paths with no moving parts), devices, and connections essential to proper functioning of the Protection System.
Control and trip circuits with electromechanical trip or auxiliary (UFLS/UVLS Systems Only)	6 Calendar Years	Perform a complete functional trip test that includes all sections of the Protection System control and trip circuits, including all electromechanical trip and auxiliary contacts essential to proper functioning of the Protection System, except .that verification does not require actual tripping of circuit breakers or interrupting devices.

Table 1a — Time-Based Maintenance — Level 1 Monitoring Maximum Allowable Testing Intervals and Maintenance Activities for Unmonitored Protection ~~Systems~~System Components **General Description:** Protection System components which do not have self-monitoring alarms, or if self-monitoring alarms are available, the alarms are not transmitted to a location where action can be taken for alarmed failures. **General Maintenance Requirements:** Perform maintenance activities listed and initiate necessary corrective actions in accordance with Requirement R4.		
Type of Protection System Component	**Maximum Maintenance Interval**	**Maintenance Activities**
~~Protection System~~ Control ~~Circuitry (Trip Circuits)~~and trip circuits with unmonitored solid-state trip or auxiliary contacts (UFLS/UVLS Systems Only)	~~(when the associated UVLS or UFLS system is maintained)~~12 Calendar Years	Perform a complete functional trip test that includes all sections of the Protection System control and trip circuit, including all solid-state trip and auxiliary contacts (e.g. paths with no moving parts), devices, and connections essential to proper functioning of the Protection System~~.~~, except that verification does not require actual tripping of circuit breakers or interrupting devices.
Station dc Supply (used only for UVLS or UFLS)	(when the associated UVLS or UFLS system is maintained)	Verify proper voltage of the dc supply.
Station dc supply ~~Station dc supply (that has as a component any type of battery)~~	18 Calendar Months~~3 Months~~	Verify: • State of charge of the individual battery cell/units • Float voltage of battery charger • Battery continuity • Battery terminal connection resistance • Battery cell-to-cell connection resistance Inspect: • Cell condition of all individual battery cells where cells are visible – or measure battery cell/unit internal ohmic values where the cells are not visible • Physical condition of battery rack • The condition of non-battery-based dc supply ~~Verify proper electrolyte level (excluding valve regulated lead acid batteries).~~ ~~Verify proper voltage of the station battery.~~ ~~Verify that no dc supply grounds are present.~~

Table 1a — Time-Based Maintenance — Level 1 Monitoring Maximum Allowable Testing Intervals and Maintenance Activities for Unmonitored Protection ~~Systems~~System Components **General Description:** Protection System components which do not have self-monitoring alarms, or if self-monitoring alarms are available, the alarms are not transmitted to a location where action can be taken for alarmed failures. **General Maintenance Requirements:** Perform maintenance activities listed and initiate necessary corrective actions in accordance with Requirement R4.		
Type of Protection System Component	**Maximum Maintenance Interval**	**Maintenance Activities**
Station dc supply (that has as a component any type of battery)	3 Calendar Months	Check: • Electrolyte level (excluding valve-regulated lead acid batteries) • Station dc supply voltage For unintentional grounds~~Verify proper electrolyte level (excluding valve-regulated lead acid batteries).~~ ~~Verify proper voltage of the station battery.~~ • ~~Verify that no dc supply grounds are present.~~
~~Station dc supply (that has as a component any type of battery)~~	~~18 Months~~	~~Verify proper voltage of each individual cell or unit in the station battery.~~ ~~**Verify that station** battery charger **provides the correct float and equalize voltages.**~~ ~~Verify continuity and cell integrity of entire battery.~~ ~~Perform a visual cell inspection of all cells for "cell condition" (where cells are visible) or measurement of cell/unit internal ohmic values (where cells are not visible).~~ ~~Measure that specific gravity and temperature of each cell is within tolerance(where applicable)~~ ~~Verify cell to cell and terminal connection resistance is within tolerance~~ ~~**Inspect the structural integrity of the** battery rack.~~
Station dc supply (that has as a component Valve Regulated Lead-Acid batteries)	3 Calendar Years - or - 3 Calendar Months	Verify that the station battery can perform as designed by conducting a performance or service capacity test of the entire battery bank. (3 calendar years) - or - Verify that the station battery can perform as designed by evaluating the measured cell/unit internal ohmic values to station battery baseline. (3 months)

Table 1a — Time-Based Maintenance — Level 1 Monitoring Maximum Allowable Testing Intervals and Maintenance Activities for Unmonitored Protection ~~Systems~~System Components **General Description:** Protection System components which do not have self-monitoring alarms, or if self-monitoring alarms are available, the alarms are not transmitted to a location where action can be taken for alarmed failures. **General Maintenance Requirements:** Perform maintenance activities listed and initiate necessary corrective actions in accordance with Requirement R4.		
Type of Protection System Component	**Maximum Maintenance Interval**	**Maintenance Activities**
Station dc supply (that has as a component Vented Lead-Acid Batteries)	6 Calendar Years ~~Or~~ - or - 18 Calendar Months	Verify that the station battery can perform as designed by conducting a performance, service, or modified performance capacity test of the entire battery bank. (6 calendar years) - or - Verify that the station battery can perform as designed by evaluating the measured cell/unit internal ohmic values to station battery baseline. (18 Months)
Station dc supply (that has as a component Nickel-Cadmium batteries)	6 Calendar Years	Verify that the substation battery can perform as designed by conducting a performance service, or modified performance capacity test of the entire battery bank.
Station dc supply (battery is not used)~~(that uses~~~~which do not use a station battery and charger)~~	6 Calendar Years	Verify that the ~~battery charger~~dc supply can perform as designed ~~by testing that~~when the ~~charger will provide full rated current and will properly current-limit.~~ac power from the grid is not present.
Station dc Supply (battery is not used)	18 Calendar Months	Verify proper voltage of the station dc supply. Verify that no unintentional dc supply grounds are present. Perform a visual inspection, of all components of the station dc supply to verify that the physical condition of the station dc supply is as desired and any visual inspection if required by the manufacturer on the condition of the dc supply that is the source of dc power when ac power is unavailable. Verify where applicable the proper voltage level of each component of the station dc supply. Verify the correct operation of ac powered dc power supplies. Verify the continuity of all circuit connections that can be affected by wear or corrosion. Inspect all circuit connections that can be affected by wear and corrosion.
~~Station dc Supply (used only for UVLS or UFLS)~~	~~(when the associated UVLS or UFLS system is maintained)~~	~~Verify proper voltage of the dc supply.~~

Table 1a — Time-Based Maintenance — Level 1 Monitoring Maximum Allowable Testing Intervals and Maintenance Activities for Unmonitored Protection ~~Systems~~System Components **General Description:** Protection System components which do not have self-monitoring alarms, or if self-monitoring alarms are available, the alarms are not transmitted to a location where action can be taken for alarmed failures. **General Maintenance Requirements:** Perform maintenance activities listed and initiate necessary corrective actions in accordance with Requirement R4.		
Type of Protection System Component	**Maximum Maintenance Interval**	**Maintenance Activities**
~~Protection system~~Associated communications ~~equipment and channels.~~systems	3 Calendar Months	Verify that the Protection System communications ~~monitoring and alarms reflect the intended communications~~ system ~~condition by means of a substation inspection.~~is functional.
~~Protection system~~Associated communications ~~equipment and channels.~~systems	6 Calendar Years	Verify that the performance of the channel and the quality of the channel meets performance criteria, such as via measurement of signal level, reflected power, or data error rate. Verify proper functioning of communications equipment ~~outputs.~~ inputs and outputs that are essential to proper functioning of the Protection System. Verify the signals to/from the associated protective relay(s).
UVLS and UFLS relays that comprise a protection scheme distributed over the power system	6 Calendar Years	Test and calibrate the relays (other than microprocessor relays) with simulated electrical inputs. (Note 1) Verify proper functioning of the relay trip outputs. For microprocessor relays verify the proper functioning of the A/D converters ~~(Note 2)~~. Verify that settings are as specified.
Relay sensing for Centralized UFLS or UVLS ~~systems~~systems UVLS and UFLS relays that comprise a protection scheme distributed over the power system	See Maintenance Activities	Perform all of the Maintenance activities listed above as established for components of the UFLS or UVLS systems at the intervals established for those individual components. The output action may be breaker tripping, or other control action that must be verified, but may be verified in overlapping segments. A grouped output control action need be verified only once within the specified time interval, but all of the UFLS or UVLS components whose operation leads to that control action must each be verified.
SPS	See Maintenance Activities	Perform all of the Maintenance activities listed above as established for components of the SPS at the intervals established for those individual components. The output action may be breaker tripping, or other control action that must be verified, but may be verified in overlapping segments. A grouped output control action need be verified only once within the specified time interval, but all of the SPS components whose operation leads to that control action must each be verified.

Table 1b — Condition-Based Maintenance - Level 2 Monitoring Maximum Allowable Testing Intervals and Maintenance Activities for Partially Monitored Protection System Components **General Description:** Protection System components whose conditions or alarms are automatically provided daily (or more frequently) to a location where action can be taken for alarmed failures. ~~Monitoring includes all elements~~Detected maintenance-correctable issues for Level 2 Monitored Protection Systems must be reported within 1 day or less of ~~level 1~~ the maintenance-correctable issue occurring, to a location where action can be taken to initiate resolution of the maintenance-correctable issue. Level 2 monitoring ~~with additional~~ includes all monitoring attributes as listed below for the individual type of component. **General Maintenance Requirements:** Perform maintenance activities listed and initiate necessary corrective actions in accordance with Requirement R4.			
Type of Protection System Component	**Level 2 Monitoring Attributes for Component**	**Maximum Maintenance Interval**	**Maintenance Activities**
Protective Relays	Includes ~~internal~~ • Internal self diagnosis and alarm capability~~, which~~ • Alarm must assert for power supply failures~~. Includes input~~ • Input voltage or current waveform sampling three or more times per power cycle~~, and conversion~~ • Conversion of samples to numeric values for measurement calculations by microprocessor electronics that are also performing self diagnosis and alarming	12 Calendar Years	Verify the status of relays is normal with no alarms indicated. Verify ~~the~~acceptable measurement of power system input values. For microprocessor relays, check the relay inputs and outputs that are essential to proper functioning of the ~~A/D converters within the relay by testing or comparing values against other devices~~Protection System. ~~Verify proper functioning of the relay trip outputs.~~ Verify that settings are as specified. Verify that the relay alarms will be received at the location where action can be taken. ~~See Note 2.~~Verify correct operation of output actions that are used for tripping.
Voltage and Current Sensing ~~Devices~~ – Inputs to Protective Relays and associated circuitry	No Level 2 monitoring attributes are defined – use Level 1 Maintenance Activities	12 Calendar Years	Verify the proper functioning of current and voltage circuit ~~inputs~~signals necessary for Protection System operation from the voltage and current sensing devices to the protective relays.
~~Protection System~~ Control Circuitry (Trip Coils and Auxiliary Relays)	~~No Level 2 monitoring attributes are defined – use Level 1 Maintenance Activities and intervals~~Monitoring and alarming of continuity of trip circuits(s)	6 Calendar Years	Verify that each breaker trip coil, each auxiliary relay, and each lockout relay is electrically operated within this time interval.

Table 1b — Condition-Based Maintenance - Level 2 Monitoring Maximum Allowable Testing Intervals and Maintenance Activities for Partially Monitored Protection System Components **General Description:** Protection System components whose conditions or alarms are automatically provided daily (or more frequently) to a location where action can be taken for alarmed failures. ~~Monitoring includes all elements~~Detected maintenance-correctable issues for Level 2 Monitored Protection Systems must be reported within 1 day or less of ~~level 1~~ the maintenance-correctable issue occurring, to a location where action can be taken to initiate resolution of the maintenance-correctable issue. Level 2 monitoring ~~with additional~~ includes all monitoring attributes as listed below for the individual type of component. **General Maintenance Requirements:** Perform maintenance activities listed and initiate necessary corrective actions in accordance with Requirement R4.			
Type of Protection System Component	**Level 2 Monitoring Attributes for Component**	**Maximum Maintenance Interval**	**Maintenance Activities**
~~Protection System~~ Control Circuitry (Trip Circuits) (except for UFLS/UVLS)	~~Monitoring and alarming of continuity of trip coil(s)~~ Monitoring of Protection System component inputs, outputs, and connections with reporting of monitoring alarms to a location where action can be taken Connection paths using electronic signals or data messages are monitored by periodic signal changes or messages that verify ability to convey Protection System operating values	12 Calendar Years	~~Perform a complete functional trip test that includes all sections of the Protection System trip circuit, including all auxiliary contacts essential to proper functioning of the Protection System.~~ Verify that the ~~relay~~ alarms will be received at the location where action can be taken.

Table 1b — Condition-Based Maintenance - Level 2 Monitoring Maximum Allowable Testing Intervals and Maintenance Activities for Partially Monitored Protection System Components **General Description:** Protection System components whose conditions or alarms are automatically provided daily (or more frequently) to a location where action can be taken for alarmed failures. ~~Monitoring includes all elements~~Detected maintenance-correctable issues for Level 2 Monitored Protection Systems must be reported within 1 day or less of ~~level 1~~ the maintenance-correctable issue occurring, to a location where action can be taken to initiate resolution of the maintenance-correctable issue. Level 2 monitoring ~~with additional~~ includes all monitoring attributes as listed below for the individual type of component. **General Maintenance Requirements:** Perform maintenance activities listed and initiate necessary corrective actions in accordance with Requirement R4.			
Type of Protection System Component	**Level 2 Monitoring Attributes for Component**	**Maximum Maintenance Interval**	**Maintenance Activities**
~~**Protection System Control Circuitry (Trip Circuits) (UFLS/UVLS Systems Only)**~~Control and trip circuitry	~~Monitoring and alarming of continuity of trip coil(s)~~ Monitoring of the continuity of breaker trip circuits along with the presence of tripping voltage supply all the way from relay terminals (or from inside the relay) through to the trip coil(s), including any auxiliary contacts essential to proper Protection System operation. If a trip circuit comprises multiple paths, each of the paths must be monitored, including monitoring of the operating coil circuit(s) and the tripping circuits of auxiliary tripping relays and lockout relays. Alarming for loss of continuity or dc supply for trip circuits is reported to a location where action can be taken.	~~(when the associated UVLS or UFLS system is maintained)~~12 Calendar Years	~~Perform a complete functional trip test that includes all sections of the Protection System trip circuit, including all auxiliary contacts essential to proper functioning of the Protection System. (Verification does not require actual tripping of circuit breakers or interrupting devices.)~~ Verify that the ~~relay~~ alarms will be received at the location where action can be taken.

Table 1b — Condition-Based Maintenance - Level 2 Monitoring Maximum Allowable Testing Intervals and Maintenance Activities for Partially Monitored Protection System Components **General Description:** Protection System components whose conditions or alarms are automatically provided daily (or more frequently) to a location where action can be taken for alarmed failures. ~~Monitoring includes all elements~~Detected maintenance-correctable issues for Level 2 Monitored Protection Systems must be reported within 1 day or less of ~~level 1~~ the maintenance-correctable issue occurring, to a location where action can be taken to initiate resolution of the maintenance-correctable issue. Level 2 monitoring ~~with additional~~ includes all monitoring attributes as listed below for the individual type of component. **General Maintenance Requirements:** Perform maintenance activities listed and initiate necessary corrective actions in accordance with Requirement R4.			
Type of Protection System Component	**Level 2 Monitoring Attributes for Component**	**Maximum Maintenance Interval**	**Maintenance Activities**
Station dc supply ~~(that has as a component any type of battery)~~	~~Monitoring~~Monitor and ~~alarming of the station~~ alarm for: • Station dc supply voltage • ~~Detection and alarming of~~ Unintentional dc grounds~~.~~ • Electrolyte level of all cells in a station battery • Individual battery cell/unit state of charge • Battery continuity of station battery • Cell-to-cell and battery terminal resistance	~~3 Months~~ 6 Calendar ~~y~~Years	~~Verify proper electrolyte level (excluding Valve-Regulated Lead-Acid batteries).~~ Verify that the monitoring devices are calibrated (where necessary) and alarms will be received at the location where action can be taken.

Table 1b — Condition-Based Maintenance - Level 2 Monitoring Maximum Allowable Testing Intervals and Maintenance Activities for Partially Monitored Protection System Components **General Description:** Protection System components whose conditions or alarms are automatically provided daily (or more frequently) to a location where action can be taken for alarmed failures. ~~Monitoring includes all elements~~Detected maintenance-correctable issues for Level 2 Monitored Protection Systems must be reported within 1 day or less of ~~level 1~~ the maintenance-correctable issue occurring, to a location where action can be taken to initiate resolution of the maintenance-correctable issue. Level 2 monitoring ~~with additional~~ includes all monitoring attributes as listed below for the individual type of component. **General Maintenance Requirements:** Perform maintenance activities listed and initiate necessary corrective actions in accordance with Requirement R4.			
Type of Protection System Component	**Level 2 Monitoring Attributes for Component**	**Maximum Maintenance Interval**	**Maintenance Activities**
Station dc supply~~(that has as a component any type of battery)~~	~~Monitoring and alarming of the station dc supply voltage.~~ ~~Detection and alarming of dc grounds.~~ No Level 2 monitoring attributes are defined – use Level 1 Maintenance Activities	18 Calendar Months	~~Verify proper voltage~~Inspect: Cell condition of ~~each~~ individual ~~cell or unit in the station~~ battery~~.~~ ~~Verify that station battery charger provides the correct float and equalize voltages.~~ ~~Verify electrical continuity of the entire battery.~~ • ~~Perform a visual cell inspection of all~~ cells ~~for "cell condition" (~~where cells are visible~~)~~, or ~~measurement of~~ measure battery cell/unit internal ohmic values~~. (~~ where cells are not visible~~)~~ ~~Measure that specific gravity and temperature of each cell is within tolerance. (where applicable)~~ ~~Verify cell to cell and terminal connection resistance is within tolerance.~~ • ~~**Inspect the structural integrity of the**~~ Physical condition of battery rack • ~~Verify that the~~ The condition of non-battery ~~voltage and~~based dc supply~~ ground alarms will be received at the location where action can be taken.~~
Station dc supply (that has as a component Valve Regulated Lead-Acid batteries)	~~Monitoring and alarming of the station dc supply voltage.~~ ~~Detection and alarming of dc grounds.~~ No Level 2 monitoring attributes are defined – use Level 1 Maintenance Activities	3 Calendar Years - or - 3 Calendar Months	Verify that the station battery can perform as designed by conducting a performance or service capacity test of the entire battery bank. (3 calendar years) - or - Verify that the station battery can perform as designed by evaluating the measured cell/unit internal ohmic values to station battery baseline. (3 months)

Table 1b — Condition-Based Maintenance - Level 2 Monitoring Maximum Allowable Testing Intervals and Maintenance Activities for Partially Monitored Protection System Components **General Description:** Protection System components whose conditions or alarms are automatically provided daily (or more frequently) to a location where action can be taken for alarmed failures. ~~Monitoring includes all elements~~Detected maintenance-correctable issues for Level 2 Monitored Protection Systems must be reported within 1 day or less of ~~level 1~~ the maintenance-correctable issue occurring, to a location where action can be taken to initiate resolution of the maintenance-correctable issue. Level 2 monitoring ~~with additional~~ includes all monitoring attributes as listed below for the individual type of component. **General Maintenance Requirements:** Perform maintenance activities listed and initiate necessary corrective actions in accordance with Requirement R4.			
Type of Protection System Component	**Level 2 Monitoring Attributes for Component**	**Maximum Maintenance Interval**	**Maintenance Activities**
Station dc supply (that has as a component Vented Lead-Acid batteries)	~~Monitoring and alarming of the station dc supply voltage.~~ ~~Detection and alarming of dc grounds.~~No Level 2 monitoring attributes are defined – use Level 1 Maintenance Activities	6 Calendar Years - or - 18 Calendar Months	Verify that the substation battery can perform as designed by conducting a performance service, or modified performance capacity test of the entire battery bank. (6 calendar years) - or - Verify that the station battery can perform as designed by evaluating the measured cell/unit internal ohmic values to station battery baseline. (18 Months)
Station dc supply (that has as a component Nickel-Cadmium batteries)	~~Monitoring and alarming of the station dc supply voltage.~~ ~~Detection and alarming of dc grounds.~~No Level 2 monitoring attributes are defined – use Level 1 Maintenance Activities	6 Calendar Years	Verify that the substation battery can perform as designed by conducting a performance service, or modified performance capacity test of the entire battery bank.
~~Station dc supply (that uses a battery and charger)~~	~~Monitoring and alarming of the station dc supply voltage.~~ ~~Detection and alarming of dc grounds.~~	~~6 Calendar Years~~	~~Verify that the battery charger can perform as designed by testing that the charger will provide full rated current and will properly current-limit.~~

Table 1b — Condition-Based Maintenance - Level 2 Monitoring

Maximum Allowable Testing Intervals and Maintenance Activities for Partially Monitored Protection System Components

General Description: Protection System components whose conditions or alarms are automatically provided daily (or more frequently) to a location where action can be taken for alarmed failures. ~~Monitoring includes all elements~~Detected maintenance-correctable issues for Level 2 Monitored Protection Systems must be reported within 1 day or less of ~~level 1~~ the maintenance-correctable issue occurring, to a location where action can be taken to initiate resolution of the maintenance-correctable issue. Level 2 monitoring ~~with additional~~ includes all monitoring attributes as listed below for the individual type of component.

General Maintenance Requirements: Perform maintenance activities listed and initiate necessary corrective actions in accordance with Requirement R4.

Type of **Protection System** Component	Level 2 Monitoring Attributes for Component	Maximum Maintenance Interval	Maintenance Activities
Station dc Supply (battery is not used)	~~Monitoring and alarming of the station dc supply voltage.~~ ~~Detection and alarming of dc grounds.~~No Level 2 monitoring attributes are defined – use Level 1 Maintenance Activities	~~18 Months~~ 6 Calendar Years	Verify ~~proper voltage of~~ that the ~~station~~ dc supply~~, and where applicable, of each component of the station dc supply.~~ ~~Verify the proper operation of ac powered dc power supplies.~~ ~~Verify the continuity of all circuit connections that~~ can ~~be affected by wear or corrosion.~~ ~~Perform a visual inspection, of all components of the station dc supply to verify that the physical condition of the station dc supply is~~ **perform as** ~~desired and any visual inspection if required by the manufacturer on the condition of the dc supply that is the source of dc power~~**designed** when ac power ~~is unavailable.~~ ~~Verify that the station dc supply voltage and dc supply ground alarms will be received at a location where action can be taken.~~from the grid is not present.
~~Station dc Supply (used only for UVLS or UFLS)~~	~~No Level 2 monitoring attributes are defined – use Level 1 Maintenance Activities and intervals~~	~~(when the associated UVLS or UFLS system is maintained)~~	~~Verify proper voltage of the dc supply~~
~~Protection system~~Associated communications ~~equipment and channels.~~system	Monitoring and alarming of protection communications system by mechanisms that check for presence of the communications channel.	12 Calendar Years	Verify that the performance of the channel and the quality of the channel meets performance criteria, such as via measurement of signal level, reflected power, or data error rate. Verify proper functioning of communications equipment inputs and outputs that are essential to proper functioning of the Protection System. Verify the signals to/from the associated protective relay(s). Verify proper functioning of alarm notification.

Table 1b — Condition-Based Maintenance - Level 2 Monitoring Maximum Allowable Testing Intervals and Maintenance Activities for Partially Monitored Protection System Components **General Description:** Protection System components whose conditions or alarms are automatically provided daily (or more frequently) to a location where action can be taken for alarmed failures. ~~Monitoring includes all elements~~Detected maintenance-correctable issues for Level 2 Monitored Protection Systems must be reported within 1 day or less of ~~level 1~~ the maintenance-correctable issue occurring, to a location where action can be taken to initiate resolution of the maintenance-correctable issue. Level 2 monitoring ~~with additional~~ includes all monitoring attributes as listed below for the individual type of component. **General Maintenance Requirements:** Perform maintenance activities listed and initiate necessary corrective actions in accordance with Requirement R4.			
Type of Protection System Component	**Level 2 Monitoring Attributes for Component**	**Maximum Maintenance Interval**	**Maintenance Activities**
UVLS and UFLS relays that comprise a protection scheme distributed over the power system	Includes internal self diagnosis and alarm capability, which must assert for power supply failures. Includes input voltage or current waveform sampling three or more times per power cycle, and conversion of samples to numeric values for measurement calculations by microprocessor electronics that are also performing self diagnosis and alarming.	12 Calendar Years	Verify the status of relays as in service with no alarms. ~~Verify the~~Verify acceptable measurement of power system input values the proper function of the A/D converters (if included in relay). Verify proper functioning of the relay trip outputs. Verify that settings are as specified. Verify that the relay alarms will be received at the location where action can be taken.
Relay sensing for centralized UFLS or UVLS systems	See the attributes of Level ~~1~~2 Monitoring for the individual components of the SPS	See Maintenance Intervals for the individual components of the UFLS/UVLS	Perform all of the Maintenance activities listed above as established for components of the UFLS or UVLS systems at the intervals established for those individual components. The output action may be breaker tripping, or other control action that must be verified, but may be verified in overlapping segments. A grouped output control action need be verified only once within the specified time interval, but all of the UFLS or UVLS components whose operation leads to that control action must each be verified.
SPS	See the attributes of Level ~~1~~ 2 Monitoring for the individual components of the SPS	See Maintenance Intervals for the individual components of the SPS	Perform all of the Maintenance activities listed above as established for components of the SPS, at the intervals established for those individual components. The output action may be breaker tripping, or other control action that must be verified, but may be verified in overlapping segments. A grouped output control action need be verified only once within the specified time interval, but all of the SPS components whose operation leads to that control action must each be verified.

Table 1c — Condition-based Maintenance — Level 3 Monitoring

Maximum Allowable Testing Intervals and Maintenance Activities for Fully Monitored Protection ~~Systems~~System Components

General Description: Protection System components in which every function required for correct operation of that component is continuously monitored and verified, and detected maintenance-correctable issues reported. Level 3 Monitored Protection Systems also includes verification of the means by which alarms and monitored values are transmitted to a location where action can be taken. Detected maintenance-correctable issues for Level 3 Monitored Protection Systems must be reported within 1 hour or less of the maintenance-correctable issue occurring, to a location where action can be taken to initiate resolution of the maintenance-correctable issue. Level 3 Monitoring includes all ~~elements~~attributes of Level 2 Monitoring, with additional monitoring attributes as listed below for the individual type of component.

General Maintenance Requirements: Perform maintenance activities listed and initiate necessary corrective actions in accordance with Requirement R4.

Type of Protection System Component	Level 3 Monitoring Attributes for Component	Maximum Maintenance Interval	Maintenance Activities
Protective Relays	~~The relay~~Relay A/D converters are continuously monitored and alarmed	Continuous	Continuous verification of the status of the relays~~. (Note 2)~~ Alarm on change of settings
Protective Relays with trip contacts	All Level attributes, except relay possesses mechanical output contacts	12 Calendar Years	Verify proper functioning of the relay trip contacts.
Voltage and Current Sensing ~~Devices~~ Inputs to Protective Relays and associated circuitry	Verification of the ~~ac~~ analog values (magnitude and phase angle) measured by the microprocessor relay or comparable device, by comparing against other measurements using other ~~instrument transformers.~~voltage and current sensing devices	Continuous	Continuous verification and comparison of the current and voltage signals from the voltage and current sensing devices of the Protection System
Protection System control and trip circuitry	Monitoring and alarming of the alarm path itself	Continuous	Continuous verification of the status of the monitored control circuits

Table 1c — Condition-based Maintenance — Level 3 Monitoring

Maximum Allowable Testing Intervals and Maintenance Activities for Fully Monitored Protection ~~Systems~~System Components

General Description: Protection System components in which every function required for correct operation of that component is continuously monitored and verified, and detected maintenance-correctable issues reported. Level 3 Monitored Protection Systems also includes verification of the means by which alarms and monitored values are transmitted to a location where action can be taken. Detected maintenance-correctable issues for Level 3 Monitored Protection Systems must be reported within 1 hour or less of the maintenance-correctable issue occurring, to a location where action can be taken to initiate resolution of the maintenance-correctable issue. Level 3 Monitoring includes all ~~elements~~attributes of Level 2 Monitoring, with additional monitoring attributes as listed below for the individual type of component.

General Maintenance Requirements: Perform maintenance activities listed and initiate necessary corrective actions in accordance with Requirement R4.

Type of Protection System Component	Level 3 Monitoring Attributes for Component	Maximum Maintenance Interval	Maintenance Activities
~~Protection System Control Circuitry (Trip Coils and Auxiliary Relays)~~Station dc supply	No Level 3 monitoring attributes are defined – use Level ~~2~~1 Maintenance Activities and intervals	~~6~~18 Calendar ~~Years~~Months	~~Each breaker trip coil, each auxiliary relay, and each lockout relay must be electrically operated within this time interval.~~Inspect: • Cell condition of all individual battery cells where cells are visible – or measure battery cell/unit internal ohmic values where the cells are not visible • Physical condition of battery rack • The condition of non-battery-based dc supply
~~Protection System Control Circuitry (Trip Circuits)~~Station dc supply (that has as a component Valve Regulated Lead-Acid batteries)	~~Monitoring of the continuity of breaker trip circuits (with alarming for non-continuity), along with the presence of tripping voltage supply all the way from relay terminals (or from inside the relay) through to the trip coil, including any auxiliary contacts essential to proper Protection System operation. If a trip circuit comprises multiple paths, each of the paths must be monitored, including monitoring of the operating coil circuit(s) and the tripping circuits of auxiliary tripping relays and lockout relays.~~No Level 3 monitoring attributes are defined – use Level 1 Maintenance Activities and intervals	~~Continuous~~3 Calendar Years - or - 3 Calendar Months	~~Continuous monitoring of trip voltage and trip path integrity of entire trip circuit is provided with alarming to remote terminal unit upon any failure of the trip path.~~ Verify that the station battery can perform as designed by conducting a performance or service capacity test of the entire battery bank. (3 calendar years) - or - Verify that the station battery can perform as designed by evaluating the measured cell/unit internal ohmic values to station battery baseline. (3 months)

Table 1c — Condition-based Maintenance — Level 3 Monitoring Maximum Allowable Testing Intervals and Maintenance Activities for Fully Monitored Protection ~~Systems~~System Components **General Description:** Protection System components in which every function required for correct operation of that component is continuously monitored and verified, and detected maintenance-correctable issues reported. Level 3 Monitored Protection Systems also includes verification of the means by which alarms and monitored values are transmitted to a location where action can be taken. Detected maintenance-correctable issues for Level 3 Monitored Protection Systems must be reported within 1 hour or less of the maintenance-correctable issue occurring, to a location where action can be taken to initiate resolution of the maintenance-correctable issue. Level 3 Monitoring includes all ~~elements~~attributes of Level 2 Monitoring, with additional monitoring attributes as listed below for the individual type of component. **General Maintenance Requirements:** Perform maintenance activities listed and initiate necessary corrective actions in accordance with Requirement R4.			
Type of Protection System Component	**Level 3 Monitoring Attributes for Component**	**Maximum Maintenance Interval**	**Maintenance Activities**
Station dc ~~Supply (any battery technology)~~supply (that has as a component Vented Lead-Acid Batteries)	~~Monitoring and alarming the station dc supply status, including, for station dc supplies that have as a component a battery, the voltage, specific gravity, electrolyte level, temperature and connectivity (cell to cell and terminal connection resistance) of each cell as well as the battery system terminal voltage and electrical continuity of the overall battery system.~~ ~~Monitoring and alarming if the performance capability of the battery is degraded.~~ ~~Monitoring and alarming the ac powered dc power supply status including low and high voltage and charge rate for station dc supplies that have battery systems.~~ ~~Detection and alarming of dc grounds.~~No Level 3 monitoring attributes are defined – use Level 1 Maintenance Activities and intervals	6 Calendar Years - or - 18 Calendar Months	Verify that the station battery ~~charger operation provides the correct float and equalize voltages~~ ~~Perform~~can perform as designed by conducting a ~~visual inspection~~performance service, or modified performance capacity test of the ~~station battery and charger, individual cells (including electrolyte level), connections, and racks to verify that the physical condition of the battery is as desired, and that no associated alarm lamps are illuminated.~~entire battery bank. (6 calendar years) - or - Verify that the station battery can perform as designed by evaluating the measured cell/unit internal ohmic values to station battery baseline. (18 Months)

Table 1c — Condition-based Maintenance — Level 3 Monitoring Maximum Allowable Testing Intervals and Maintenance Activities for Fully Monitored Protection ~~Systems~~System Components **General Description:** Protection System components in which every function required for correct operation of that component is continuously monitored and verified, and detected maintenance-correctable issues reported. Level 3 Monitored Protection Systems also includes verification of the means by which alarms and monitored values are transmitted to a location where action can be taken. Detected maintenance-correctable issues for Level 3 Monitored Protection Systems must be reported within 1 hour or less of the maintenance-correctable issue occurring, to a location where action can be taken to initiate resolution of the maintenance-correctable issue. Level 3 Monitoring includes all ~~elements~~attributes of Level 2 Monitoring, with additional monitoring attributes as listed below for the individual type of component. **General Maintenance Requirements:** Perform maintenance activities listed and initiate necessary corrective actions in accordance with Requirement R4.			
Type of Protection System Component	**Level 3 Monitoring Attributes for Component**	**Maximum Maintenance Interval**	**Maintenance Activities**
Station dc supply (that ~~uses~~has as a ~~battery and charger)~~component Nickel-Cadmium batteries)	~~Monitoring and alarming the station dc supply status, including, for station dc supplies that have as a component a battery, the voltage, specific gravity, electrolyte level, temperature and connectivity (cell to cell and terminal connection resistance) of each cell as well as the battery system terminal voltage and electrical continuity of the overall battery system.~~ ~~Monitoring and alarming if the performance capability of the battery is degraded.~~ ~~Monitoring and alarming the ac powered dc power supply status including low and high voltage and charge rate for station dc supplies that have battery systems.~~ ~~Detection and alarming of dc grounds.~~No Level 3 monitoring attributes are defined – use Level 1 Maintenance Activities and intervals	6 Calendar Years	Verify that the substation battery ~~charger~~ can perform as designed by ~~testing that~~conducting a performance service, or modified performance capacity test of the ~~charger will provide full rated current and will properly current-limit.~~entire battery bank.

Table 1c — Condition-based Maintenance — Level 3 Monitoring Maximum Allowable Testing Intervals and Maintenance Activities for Fully Monitored Protection ~~Systems~~System Components **General Description:** Protection System components in which every function required for correct operation of that component is continuously monitored and verified, and detected maintenance-correctable issues reported. Level 3 Monitored Protection Systems also includes verification of the means by which alarms and monitored values are transmitted to a location where action can be taken. Detected maintenance-correctable issues for Level 3 Monitored Protection Systems must be reported within 1 hour or less of the maintenance-correctable issue occurring, to a location where action can be taken to initiate resolution of the maintenance-correctable issue. Level 3 Monitoring includes all ~~elements~~attributes of Level 2 Monitoring, with additional monitoring attributes as listed below for the individual type of component. **General Maintenance Requirements:** Perform maintenance activities listed and initiate necessary corrective actions in accordance with Requirement R4.			
Type of Protection System Component	**Level 3 Monitoring Attributes for Component**	**Maximum Maintenance Interval**	**Maintenance Activities**
Station dc Supply (any battery ~~is not used)~~technology)	Monitoring and alarming ~~the~~for station dc supply ~~status, including output~~ voltage, unintentional dc grounds, electrolyte level of ~~the dc supply.~~ ~~Monitoring~~all cells of a station battery, individual battery cell/unit state of charge, battery continuity of station battery and ~~alarming if the performance capability of the dc supply is degraded.~~ ~~Detection~~cell-to-cell and ~~alarming of dc grounds.~~battery terminal resistance	Continuous	~~Continuous verification of the status of the station dc supply and its ability to deliver dc power when required, is provided.~~Continuous monitoring of station dc supply voltage, unintentional dc grounds, electrolyte level of all cells of a station battery, individual battery cell/unit state of charge, battery continuity of station battery and cell-to-cell and battery terminal resistance are provided with alarming to remote location upon any failure of the monitoring device or when sensors for the devises are out of calibration.
Station dc Supply ~~(used only for UVLS or UFLS)~~which do not use a station battery	No Level 3 monitoring attributes are defined – use Level ~~2~~1 Maintenance Activities and intervals	~~(when the associated UVLS or UFLS system is maintained)~~6 Calendar Years	Verify ~~proper voltage of~~that the dc supply can perform as designed when the ac power from the grid is not present.
~~Protection system telecommunications equipment and channels.~~Associated communications systems	Evaluating the performance of the channel and its interface to protective relays to determine the quality of the channel and alarming if the channel does not meet performance criteria	Continuous	Continuous verification that the performance and quality of the channel meets performance criteria is provided. Continuous verification of the communications equipment alarm system is provided.

Table 1c — Condition-based Maintenance — Level 3 Monitoring Maximum Allowable Testing Intervals and Maintenance Activities for Fully Monitored Protection ~~Systems~~System Components **General Description:** Protection System components in which every function required for correct operation of that component is continuously monitored and verified, and detected maintenance-correctable issues reported. Level 3 Monitored Protection Systems also includes verification of the means by which alarms and monitored values are transmitted to a location where action can be taken. Detected maintenance-correctable issues for Level 3 Monitored Protection Systems must be reported within 1 hour or less of the maintenance-correctable issue occurring, to a location where action can be taken to initiate resolution of the maintenance-correctable issue. Level 3 Monitoring includes all ~~elements~~attributes of Level 2 Monitoring, with additional monitoring attributes as listed below for the individual type of component. **General Maintenance Requirements:** Perform maintenance activities listed and initiate necessary corrective actions in accordance with Requirement R4.			
Type of Protection System Component	**Level 3 Monitoring Attributes for Component**	**Maximum Maintenance Interval**	**Maintenance Activities**
UVLS and UFLS relays that comprise a protection scheme distributed over the power system.	The relay A/D converters are continuously monitored and alarmed.	Continuous	Continuous verification of the status of the relays~~. (Note 2)~~ Alarm on change of settings Verification does not require actual tripping of circuit breakers or interrupting devices
Relay sensing for centralized UFLS or UVLS systems.	See the attributes of Level 3 Monitoring for the individual components of the UFLS/UVLS	See Maintenance Activities	Perform all of the Maintenance activities listed above as established for components of the UFLS or UVLS systems at the intervals established for those individual components. The output action may be breaker tripping, or other control action that must be verified, but may be verified in overlapping segments. A grouped output control action need be verified only once within the specified time interval, but all of the UFLS or UVLS components whose operation leads to that control action must each be verified.
SPS	See the attributes of Level 3 Monitoring for the individual components of the SPS	See Maintenance Activities	Perform all of the Maintenance activities listed above as established for components of the SPS at the intervals established for those individual components. The output action may be breaker tripping, or other control action that must be verified, but may be verified in overlapping segments. A grouped output control action need be verified only once within the specified time interval, but all of the SPS components whose operation leads to that control action must each be verified.

Notes for Table 1a, Table 1b, and Table 1c

1. For some Protection System components, adjustment is required to bring measurement accuracy within parameters established by the asset owner based on the specific application of the component. A calibration failure is the result if testing finds the specified parameters to be out of tolerance.
2. ~~Microprocessor relays typically are specified by manufacturers as not requiring calibration, but power system input values must be verified as correct within the Table intervals. The integrity of the digital inputs and outputs will be verified with the Protection System Control Circuitry.~~

PRC-005 — Attachment A

Criteria for a Performance-Based Protection System Maintenance Program

Purpose: To establish a technical basis for initial and continued use of a performance-based Protection System Maintenance Program (PSMP).

Segment: In this procedure, the term, "segment" is a grouping of Protection Systems or ~~component devices~~components from a single manufacturer, with common factors such that consistent performance is expected across the entire population of the segment, and shall only be defined for a population of 60 or more individual components.[4]

To establish the technical justification for the initial use of a performance-based PSMP:

1. Develop a list with a description of components included in each designated segment of the Protection System component population.
2. Maintain the components in each segment according to the time-based maximum allowable intervals established in Table 1 until results of maintenance activities for the segment are available for a minimum of 30 individual components of the segment.
3. Document the maintenance program activities and results for each segment, including maintenance dates and countable events[5] for each included component.
4. Analyze the maintenance program activities and results for each segment to determine the overall performance of the segment and develop maintenance intervals.
5. Determine the maximum allowable maintenance interval for each segment such that the segment experiences countable events on no more than 4% of the components within the segment, for the greater of either the last 30 components maintained or all components maintained in the previous year.

To maintain the technical justification for the ongoing use of a performance-based PSMP:

1. At least annually, update the list of Protection System components and segments and/or description if any changes occur within the segment.
2. Perform maintenance on the greater of 5% of the components (addressed in the performance based PSMP) in each segment or 3 individual components within the segment in each year.
3. For the prior year, analyze the maintenance program activities and results for each segment to determine the overall performance of the segment.
4. If the components in a Protection System segment maintained through a performance-based PSMP experience 4% or more countable events, develop, document, and

[~~4~~4] Entities with smaller populations of component devices may aggregate their populations to define a segment and shall share all attributes of a single performance-based program for that segment.

[5] Countable events include any failure of a component requiring repair or replacement, any condition discovered during the verification activities in Table 1a through Table 1c which requires corrective action, or a Misoperation attributed to hardware failure or calibration failure.

implement an action plan to reduce the countable events to less than 4% of the segment population within 3 years.

5. Using the prior year's data, determine the maximum allowable maintenance interval for each segment such that the segment experiences countable events on no more than 4% of the components within the segment, for the greater of either the last 30 components maintained or all components maintained in the previous year.

Draft Implementation Plan for PRC-005-02

Background:
In developing the implementation plan, the Standard Drafting Team considered the following:

1. The requirements set forth in the proposed standard establish maximum allowable maintenance intervals for the first time. The established maximum allowable intervals may be shorter than those currently in use by some entities.
2. For entities using longer intervals than the maximum allowable intervals established in the proposed standard, it is unrealistic for those entities to be immediately in compliance with the new intervals. Further, entities should be allowed to become compliant in such a way as to facilitate a continuing maintenance program.
3. Entities that have previously been performing maintenance within the newly specified intervals may not have all the documentation needed to demonstrate compliance with all of the maintenance activities specified.

General Considerations:
Each Transmission Owner, Generator Owner, and Distribution Provider shall follow the protection system maintenance and testing program it used to perform maintenance and testing to comply with PRC-005-1, PRC-008-0, PRC-011-0, and PRC-017-0 (for the protection system components identified in PRC-005-2 Table 1a) until that Transmission Owner, Generator Owner or Distribution Provider meets initial compliance for maintenance of the same protection system component, in accordance with the phasing specified below.

For audits that are conducted during the time period when entities are modifying their existing protection system maintenance and testing programs to become compliant with the maintenance activities and intervals specified in PRC-005-2, each responsible entity must be prepared to identify:

- All of its applicable protection system components
- For each component, whether maintenance of that component is still being addressed under PRC-005-1 or has been moved under PRC-005-2
- Evidence that each component has been maintained under the relevant requirements

Implementation plan for Requirement R1:

- Entities shall be 100% compliant on the first day of the first calendar quarter three months following applicable regulatory approvals, or in those jurisdictions where no regulatory approval is required, on the first day of the first calendar quarter six months following Board of Trustees adoption.

Implementation plan for Requirements R2, R3, and R4:

1. For Protection System Components with maximum allowable intervals of less than 1 year, as established in Table 1a,
    a. The entity shall be 100% compliant on the first day of the first calendar quarter 12 months following applicable regulatory approval, or in those jurisdictions where no

regulatory approval is required, on the first day of the first calendar quarter 12 months following Board of Trustees adoption.

2. For Protection System Components with maximum allowable intervals 1 year or more, but 2 years or less, as established in Table 1a,
    a. The entity shall be 100% compliant on the first day of the first calendar quarter 2 calendar years following applicable regulatory approval, or in those jurisdictions where no regulatory approval is required, on the first day of the first calendar quarter 2 calendar years following Board of Trustees adoption.

3. For Protection System Components with maximum allowable intervals of 6 years, as established in Table 1a,
    a. The entity shall be 30% compliant on the first day of the first calendar quarter 2 calendar years following applicable regulatory approval, or in those jurisdictions where no regulatory approval is required, on the first day of the first calendar quarter 2 calendar years following Board of Trustees adoption.
    b. The entity shall be 60% compliant on the first day of the first calendar quarter 4 calendar years following applicable regulatory approval, or in those jurisdictions where no regulatory approval is required, on the first day of the first calendar quarter 4 calendar years following Board of Trustees adoption.
    c. The entity shall be 100% compliant on the first day of the first calendar quarter 6 calendar years following applicable regulatory approval, or in those jurisdictions where no regulatory approval is required, on the first day of the first calendar quarter 6 calendar years following Board of Trustees adoption.

4. For Protection System Components with maximum allowable intervals of 12 years, as established in Table 1a,
    a. The entity shall be 30% compliant on the first day of the first calendar quarter 4 calendar years following applicable regulatory approval, or in those jurisdictions where no regulatory approval is required, on the first day of the first calendar quarter 4 calendar years following Board of Trustees adoption.
    b. The entity shall be 60% compliant on the first day of the first calendar quarter following 8 calendar years following applicable regulatory approval, or in those jurisdictions where no regulatory approval is required, on the first day of the first calendar quarter 8 calendar years following Board of Trustees adoption.
    c. The entity shall be 100% compliant on the first day of the first calendar quarter 12 calendar years following applicable regulatory approval, or in those jurisdictions where no regulatory approval is required, on the first day of the first calendar quarter 12 calendar years following Board of Trustees adoption.

Applicability:
This standard applies to the following functional entities:

- Transmission Owners
- Generator Owners
- Distribution Providers

Draft Implementation Plan for PRC-005-02

Background:
In developing the implementation plan, the Standard Drafting Team considered the following:

1. The requirements set forth in the proposed standard establish maximum allowable maintenance intervals for the first time. The established maximum allowable intervals may be shorter than those currently in use by some entities.
2. For entities using longer intervals than the maximum allowable intervals established in the proposed standard, it is unrealistic for those entities to be immediately in compliance with the new intervals. Further, entities should be allowed to become compliant in such a way as to facilitate a continuing maintenance program.
3. ~~Until an entity is 100% compliant with PRC-005-2, the entity must be in compliance with PRC-005-1 for those components for which the implementation schedule for PRC-005-2 is not yet applicable.~~
4. ~~4.~~3. Entities that have previously been performing maintenance within the newly specified intervals may not have all the documentation needed to demonstrate compliance with all of the maintenance activities specified.

General Considerations:
Each Transmission Owner, Generator Owner, and Distribution Provider shall follow the protection system maintenance and testing program it used to perform maintenance and testing to comply with PRC-005-1, PRC-008-0, PRC-011-0, and PRC-017-0 (for the protection system components identified in PRC-005-2 Table 1a) until that Transmission Owner, Generator Owner or Distribution Provider meets initial compliance for maintenance of the same protection system component, in accordance with the phasing specified below.

For audits that are conducted during the time period when entities are modifying their existing protection system maintenance and testing programs to become compliant with the maintenance activities and intervals specified in PRC-005-2, each responsible entity must be prepared to identify:

- All of its applicable protection system components
- For each component, whether maintenance of that component is still being addressed under PRC-005-1 or has been moved under PRC-005-2
- Evidence that each component has been maintained under the relevant requirements

Implementation plan for Requirement R1:

- Entities shall be 100% compliant on the first day of the first calendar quarter three months following applicable regulatory approvals, or in those jurisdictions where no regulatory approval is required, on the first day of the first calendar quarter ~~three~~six months following Board of Trustees adoption.

Implementation plan for Requirements R2, R3, and R4:

1. For Protection System Components with maximum allowable intervals of less than 1 year, as established in Table 1a,
    a. The entity shall be 100% compliant on the first day of the first calendar quarter 12 months following applicable regulatory approval, or in those jurisdictions where no

regulatory approval is required, on the first day of the first calendar quarter 12 months following Board of Trustees adoption.

2. For Protection System Components with maximum allowable intervals 1 year or more, but 2 years or less, as established in Table 1a,
    a. The entity shall be 100% compliant on the first day of the first calendar quarter 2 calendar years following applicable regulatory approval, or in those jurisdictions where no regulatory approval is required, on the first day of the first calendar quarter 2 calendar years following Board of Trustees adoption.

3. For Protection System Components with maximum allowable intervals of 6 years, as established in Table 1a,
    a. The entity shall be 30% compliant on the first day of the first calendar quarter 2 calendar years following applicable regulatory approval, or in those jurisdictions where no regulatory approval is required, on the first day of the first calendar quarter 2 calendar years following Board of Trustees adoption.
    b. The entity shall be 60% compliant on the first day of the first calendar quarter 4 calendar years following applicable regulatory approval, or in those jurisdictions where no regulatory approval is required, on the first day of the first calendar quarter 4 calendar years following Board of Trustees adoption.
    c. The entity shall be 100% compliant on the first day of the first calendar quarter 6 calendar years following applicable regulatory approval, or in those jurisdictions where no regulatory approval is required, on the first day of the first calendar quarter 6 calendar years following Board of Trustees adoption.

4. For Protection System Components with maximum allowable intervals of 12 years, as established in Table 1a,
    a. The entity shall be 30% compliant on the first day of the first calendar quarter 4 calendar years following applicable regulatory approval, or in those jurisdictions where no regulatory approval is required, on the first day of the first calendar quarter 4 calendar years following Board of Trustees adoption.
    b. The entity shall be 60% compliant on the first day of the first calendar quarter following 8 calendar years following applicable regulatory approval, or in those jurisdictions where no regulatory approval is required, on the first day of the first calendar quarter 8 calendar years following Board of Trustees adoption.
    c. The entity shall be 100% compliant on the first day of the first calendar quarter 12 calendar years following applicable regulatory approval, or in those jurisdictions where no regulatory approval is required, on the first day of the first calendar quarter 12 calendar years following Board of Trustees adoption.

Applicability:
This standard applies to the following functional entities:

- Transmission Owners
- Generator Owners
- Distribution Providers

Implementation Plan for the Revised Definition of Protection System

Prerequisite Approvals or Activities:

The implementation of the revised definition is not dependent upon any other activity.

Recommended Modifications to Already Approved Standards

The non-capitalized version of the term, "protection system" is used in the following approved standards:

- NUC-001-2 – Nuclear Plant Interface Coordination
- PER-005-1 – System Personnel Training
- PRC-001-1 – System Protection Coordination

The term, "protection system" shall be capitalized where used in these standards when the definition of "Protection System" is approved by applicable regulatory authorities.

Proposed Effective Date:

Each responsible entity (Distribution Provider that owns a transmission Protection System, Transmission Owner, and Generator Owner) shall modify its protection system maintenance and testing program description and basis document(s) (required in Requirement R1 of PRC-005-1 – Transmission and Generation Protection System Maintenance and Testing) as necessary to reflect the modified definition of 'Protection System' by the end of the first calendar quarter six months following regulatory approvals and implement any additional maintenance and testing (required in Requirement R2 of PRC-005-1 – Transmission and Generation Protection System Maintenance and Testing) by the end of the first complete maintenance and testing cycle described in the entity's program description and basis document(s) following establishment of the program changes resulting from the revised definition.

The original definition of "Protection System" shall be retired at the same time the revised definition becomes effective.

NERC
NORTH AMERICAN ELECTRIC RELIABILITY CORPORATION

Unofficial Comment Form for Proposed Definition of Protection System for Project 2007-17

Please **DO NOT** use this form. Please use the electric comment form at the link below to submit comments on the draft definition of "Protection System." Comments must be submitted by **July 16, 2010**. If you have questions please contact Al McMeekin at Al.McMeekin@nerc.net or by telephone at 803.530.1963.

http://www.nerc.com/filez/standards/Protection_System_Maintenance_Project_2007-17.html

Background Information:
The Protection System Maintenance and Testing Standard Drafting Team (PSMT SDT) posted a proposed revision to the definition of the term, "Protection System" and proposed revisions to PRC-005-2 — Protection System Maintenance for a 45-day public comment period from July 24, 2009 through September 8, 2009. There were 55 sets of comments, including comments from more than 130 different people from over 75 companies representing all of the 10 Industry Segments, however less than 10 of these sets of comments included any comments on the proposed modification to the term, "Protection System."

The drafting team posted a table that showed all the existing uses of the term, "Protection System" in already approved standards, and concluded that the new definition of Protection System (which clarifies that the dc Supply is part of a Protection System) remains consistent with the existing uses. The non-capitalized version of the term, "protection system" is used in the following approved standards:

- NUC-001-2 — Nuclear Plant Interface Coordination
- PER-005-1 — System Personnel Training
- PRC-001-1 — System Protection Coordination

The proposed modifications address ambiguities the PSMT SDT identified within the existing approved definition, and are important for the detailed use of the definition within the draft PRC-005-2 standard.

When the Board of Trustees was asked to approve an interpretation of PRC-005-1 that was written by the PSMT SDT, the board acknowledged the reliability gap identified by the drafting team and directed that work to close this reliability gap should be given "priority." In support of this direction, the PSMT SDT has separated its work in refining PRC-005-2 from its work in revising the definition of "Protection System."

The drafting team initially proposed changes to the definition as shown below:

> Protective relays, associated communication systems necessary for correct operation of protective devices, voltage and current sensing inputs to protective relays ~~devices~~, station DC supply ~~batteries~~, and DC control circuitry from the station DC supply through the trip coil(s) of the circuit breakers or other interrupting devices.

Based on stakeholder comments, the drafting team made minor changes to the proposed definition as shown below.

> Protective relays, ~~associated~~ communication systems necessary for correct operation of protective ~~devices~~functions, voltage and current sensing inputs to protective relays and associated circuitry from the voltage and current sensing devices, station dc supply, and ~~DC~~ control circuitry associated with protective functions from the station dc supply through the trip coil(s) of the circuit breakers or other interrupting devices.

The proposed definition of Protection System now reads as follows:

> Protective relays, communication systems necessary for correct operation of protective functions, voltage and current sensing inputs to protective relays and associated circuitry from the voltage and current sensing devices, station dc supply, and control circuitry associated with protective functions from the station dc supply through the trip coil(s) of the circuit breakers or other interrupting devices.

1. Do you believe the proposed definition of Protection System is ready for ballot? If not, please explain why.

   ☐ Yes

   ☐ No

   Comments:

2. Do you agree with the implementation plan for the revised definition of Protection System? The implementation plan has two phases – the first phase gives entities at least six months to update their protection system maintenance and testing program; the second phase starts when the protection system maintenance and testing program has been updated and requires implementation of any additional maintenance and testing associated with the program changes by the end of the first complete maintenance and testing cycle described in the entity's revised program. If you disagree with this implementation plan, please explain why.

   ☐ Yes

   ☐ No

   Comments:

NERC
NORTH AMERICAN ELECTRIC RELIABILITY CORPORATION

Unofficial Comment Form for 2nd Draft of the Standard for Protection System Maintenance and Testing Project 2007-17

Please **DO NOT** use this form. Please use the electronic comment form at the link below to submit comments on the 2nd draft of the PRC-005-2 standard for Protection System Maintenance and Testing. Comments must be submitted by **July 16, 2010.** If you have questions please contact Al McMeekin at al.mcmeekin@nerc.net or by telephone at 803-530-1963.

http://www.nerc.com/filez/standards/Protection_System_Maintenance_Project_2007-17.html

Background Information:
The Protection System Maintenance and Testing Standard Drafting Team (PSMT SDT) has made substantial changes to the second posting of PRC-005-2 base on comments received from the industry. The changes included:

- Re-naming the standard from "Protection System Maintenance and Testing" to "Protection System Maintenance"
- Revisions to the standard and tables regarding the maintenance activities and associated maintenance intervals
- Revisions to the tables regarding condition-based and performance based maintenance programs
- Revisions to the Supplemental Reference and the FAQ documents

In addition, Violation Risk Factors (VRFs), Time Horizons, Measures, and Compliance elements including Violation Security Levels (VSLs) have been supplied with this version of the draft standard. The rationale for the team's assignments pertaining to the VRFs and VSLs are posted in a separate document.

The PSMT SDT would like to receive industry comments on this standard.

1. The SDT has made significant changes to the minimum maintenance activities and maximum allowable intervals within Tables 1a, 1b, and 1c, particularly related to station dc supply and dc control circuits. Do you agree with these changes? If not, please provide specific suggestions for improvement.

   ☐ Yes
   ☐ No
   Comments:

2. The SDT has included VRFs and Time Horizons with this posting. Do you agree with the assignments that have been made? If not, please provide specific suggestions for improvement.

   ☐ Yes
   ☐ No
   Comments:

3. The SDT has included Measures and Data Retention with this posting. Do you agree with the assignments that have been made? If not, please provide specific suggestions for improvement.

☐ Yes
☐ No
Comments:

4. The SDT has included VSLs with this posting. Do you agree with the assignments that have been made? If not, please provide specific suggestions for change.

☐ Yes
☐ No
Comments:

5. The SDT has revised the "Supplementary Reference" document which is supplied to provide supporting discussion for the Requirements within the standard. Do you agree with the changes? If not, please provide specific suggestions for change.

☐ Yes
☐ No
Comments:

6. The SDT has revised the "Frequently-Asked Questions" (FAQ) document which is supplied to address anticipated questions relative to the standard. Do you agree with these changes? If not, please provide specific suggestions for change.

☐ Yes
☐ No
Comments:

7. If you have any other comments on this Standard that you have not already provided in response to the prior questions, please provide them here.

Comments:

NERC
NORTH AMERICAN ELECTRIC
RELIABILITY COUNCIL

NERC Protection System Maintenance Standard PRC-005-2

FREQUENTLY ASKED QUESTIONS - Practical Compliance and Implementation

April 16, 2010

Informative Annex to Standard PRC-005-2

Prepared by the

Protection System Maintenance and Testing Standard Drafting Team

Table of Contents

Introduction **2**

Executive Summary **2**

Terms Used in PRC-005-2 ..... **2**

Frequently Asked Questions **3**

I General FAQs: *3*
II Group by Type of Protection System Component: *5*
1. All Protection System Components *5*
2. Protective Relays *5*
3. Voltage and Current Sensing Device Inputs to Protective Relays *8*
4. Protection System Control Circuitry *10*
5. Station dc Supply *12*
6. Protection System Communications Equipment *15*
7. UVLS and UFLS Relays that Comprise a Protection System Distributed Over the Power System *18*
8. SPS or Relay Sensing for Centralized UFLS or UVLS *18*
III Group by Type of BES Facility: *19*
1. All BES Facilities *19*
2. Generation *20*
3. Transmission *21*
IV Group by Type of Maintenance Program: *21*
1. All Protection System Maintenance Programs *21*
2. Time-Based Protection System Maintenance (TBM) Programs *22*
3. Performance-Based Protection System Maintenance (PBM) Programs *24*
V Group by Monitoring Level: *29*
1. All Monitoring Levels *29*
2. Level 1 Monitored Protection Systems (Unmonitored Protection Systems) *39*
3. Level 2 Monitored Protection Systems (Partially Monitored Protection Systems) *39*
4. Level 3 Monitored Protection Systems (Fully Monitored Protection Systems) *40*

Appendix A — Protection System Maintenance Standard Drafting Team **41**

Index **42**

Introduction

The following is a draft collection of questions and answers that the PSMT SDT believes could be helpful to those implementing NERC Standard PRC-005-2 Protection System Maintenance. As the draft standard proceeds through development, this FAQ document will be revised, including responses to key or frequent comments from the posting process. The FAQ will be organized at a later time during the development of the draft Standard.

This FAQ document will support both the Standard and the associated Technical Reference document.

Executive Summary

- Write later if needed

Terms Used in PRC-005-2

Maintenance Correctable Issue – As indicated in footnote 2 of the draft standard, a maintenance correctable issue is a failure of a device to operate within design parameters that can not be restored to functional order by repair or calibration while performing the initial on-site maintenance activity, and that requires follow-up corrective action.

Segment – As indicated in *PRC-005-2 Attachment A Criteria for a Performance-Based Protection System Maintenance Program*, a segment is a "A grouping of Protection Systems or components of a particular model or type from a single manufacturer, with other common factors such that consistent performance is expected across the entire population of the segment, and shall only be defined for a population of 60 or more individual components."

Component – This equipment is first mentioned in Requirement 1.1 of this standard. A component is any individual discrete piece of equipment included in a Protection System, such as a protective relay or current sensing device. Types of components are listed in Table 1 ("Maximum Allowable Testing Intervals and Maintenance Activities for Unmonitored Protection Systems"). For components such as dc circuits, the designation of what constitutes a dc control circuit component is somewhat arbitrary and is very dependent upon how an entity performs and tracks the testing of the dc circuitry. Some entities test their dc circuits on a breaker basis whereas others test their circuitry on a local zone of protection basis. Thus, entities are allowed the latitude to designate their own definitions of "dc control circuit components." Another example of where the entity has some discretion on determining what constitutes a single component is the voltage and current sensing devices, where the entity may choose either to designate a full three-phase set of such devices or a single device as a single component.

Countable Event – As indicated in footnote 4 of *PRC-005-2 Attachment A, Criteria for a Performance-based Protection System Maintenance Program*, countable events include any failure of a component requiring repair or replacement, any condition discovered during the verification activities in Table 1a through Table 1c which requires corrective action, or a Misoperation attributed to hardware failure or calibration failure. Misoperations due to product design errors, software errors, relay settings different from specified settings, Protection System component configuration errors, or Protection System application errors are *not* included in Countable Events.

Frequently Asked Questions

I General FAQs:

1. The standard seems very complicated, and is difficult to understand. Can it be simplified?

Because the standard is establishing parameters for condition-based Maintenance (R2) and performance-based Maintenance (R3) in addition to simple time-based Maintenance, it does appear to be complicated. At its simplest, an entity needs to follow R1 and R4 and perform ONLY time-based maintenance according to Table 1a, eliminating R2 and R3 from consideration altogether. If an entity then wishes to take advantage of monitoring on its Protection System components, R2 comes into play, along with Tables 1b and 1c. If an entity wishes to use historical performance of its Protection System components to perform performance-based Maintenance, R3 applies.

Please see the following diagram, which provides a "flow chart" of the standard.

Requirements Flowchart

PRC-005-2

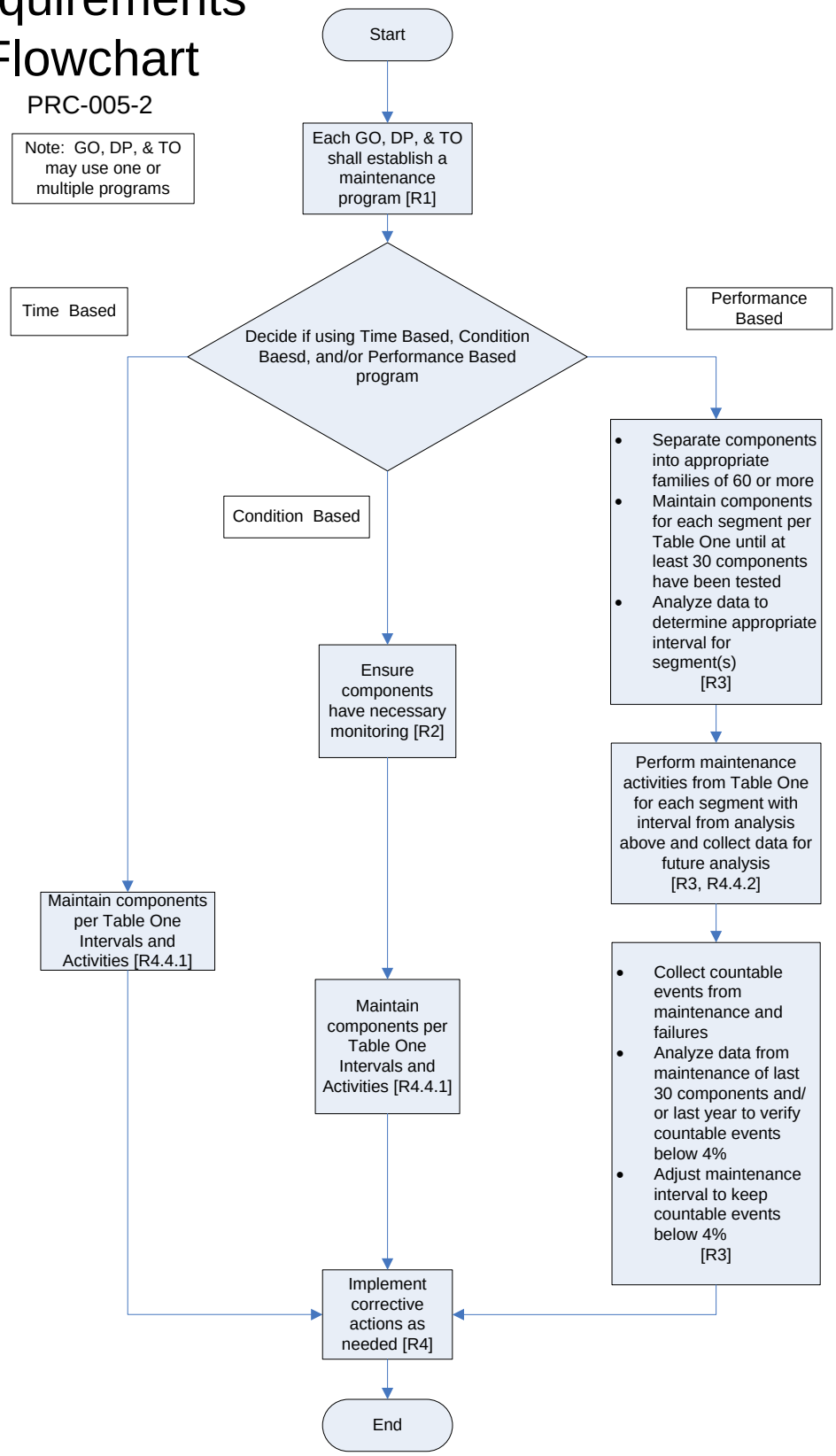

II Group by Type of Protection System Component:

1. All Protection System Components

A. Are power circuit reclosers, reclosing relays, closing circuits and auto-restoration schemes covered in this standard?

No. As stated in R1, this standard covers protective relays that use measurements of voltage, current and/or phase angle to determine anomalies and to trip a portion of the BES. Reclosers, reclosing relays, closing circuits and auto-restoration schemes are used to cause devices to close as opposed to electrical-measurement relays and their associated circuits that cause circuit interruption from the BES; such closing devices and schemes are more appropriately covered under other NERC Standards. There is one notable exception: if a Special Protection System incorporates automatic closing of breakers, the related closing devices are part of the SPS and must be tested accordingly.

B. Why does PRC-005-2 not specifically require maintenance and testing procedures as reflected in the previous standard, PRC-005-1?

PRC-005-1 does not require <u>detailed</u> maintenance and testing procedures, but instead requires <u>summaries</u> of such procedures, and is not clear on what is actually required. PRC-005-2 requires a documented Maintenance program, and is focused on establishing Requirements rather than prescribing methodology to meet those Requirements. Between the activities identified in Tables 1a, 1b, and 1c, and the various components of the definition established for a "Protection System Maintenance Program", PRC-005-2 establishes the activities and time-basis for a Protection System Maintenance Program to a level of detail not previously required.

2. Protective Relays

A. How do I approach testing when I have to upgrade firmware of a microprocessor relay?

The component "Upkeep" in the definition of a Protection System Maintenance Program, addresses "Routine activities necessary to assure that the component remains in good working order and implementation of any manufacturer's hardware and software service advisories which are relevant to the application of the device." The Maintenance Activities specified in Table 1a, Table 1b, and Table 1c do not present any requirements related to Upkeep for Protective Relays. However, the entity should assure that the relay continues to function properly after implementation of firmware changes.

B. Please clarify what is meant by restoration in the definition of maintenance.

The component "Restoration" in the definition of a Protection System Maintenance Program, addresses corrective activities necessary to assure that the component is returned to working order following the discovery of its failure or malfunction. The Maintenance Activities specified in Table 1a, Table 1b, and Table 1c do not present any requirements related to

Restoration; R4.3 of the standard does require that the entity "initiate any necessary activities to correct unresolved maintenance correctable issues". Some examples of restoration (or correction of maintenance-correctable issues) include, but are not limited to, replacement of capacitors in distance relays to bring them to working order; replacement of relays, or other Protection System components, to bring the Protection System to working order; upgrade of electro-mechanical or solid-state protective relays to micro-processor based relays following the discovery of failed components. Restoration, as used in this context is not to be confused with Restoration rules as used in system operations. Maintenance activity necessarily includes both the detection of problems and the repairs needed to eliminate those problems. This standard does not identify all of the Protection System problems that must be detected and eliminated, rather it is the intent of this standard that an entity determines the necessary working order for their various devices and keeps them in working order. If an equipment item is repaired or replaced then the entity can restart the maintenance-time-interval-clock if desired, however the replacement of equipment does not remove any documentation requirements that would have been required to verify compliance with time-interval requirements; in other words do not discard maintenance data that goes to verify your work

C. If I upgrade my old relays then do I have to maintain my previous equipment maintenance documentation?

If an equipment item is repaired or replaced then the entity can restart the maintenance-activity-time-interval-clock if desired, however the replacement of equipment does not remove any documentation requirements. The requirements in the standard are intended to ensure that an entity has a maintenance plan and that the entity adheres to minimum activities and maximum time intervals. The documentation requirements are intended to help an entity demonstrate compliance. For example, saving the dates and records of the last two maintenance cycles is intended to demonstrate compliance with the interval. Therefore, if you upgrade or replace equipment then you still must maintain the documentation for the previous equipment, thus demonstrating compliance with the time interval requirement prior to the replacement action.

D. What is meant by "Verify that settings are as specified" maintenance activity in tables 1a and 1b?

Verification of settings is an activity directed mostly towards microprocessor based relays.

For relay maintenance departments that choose to test microprocessor based relays in the same manner as electro-mechanical relays are tested, the testing process sometimes requires that some specific functions be disabled. Later tests might enable the functions previously disabled but perhaps still other functions or logic statements were then masked out. It is imperative that, when the relay is placed into service, the settings in the relay be the settings that were intended to be in that relay or as the Standard states "…settings are as specified."

Many of the microprocessor based relays available today have software tools which provide this functionality and generate reports for this purpose.

For evidence or documentation of this requirement a simple recorded acknowledgement that this was done is sufficient.

The drafting team was careful not to require "…that the relay settings be correct…" because it was believed that this might then place a burden of proof that the specified settings would result in the correct intended operation of the interrupting device. While that is a noble intention, the measurable proof of such a requirement is immense. The intent is simply to check that the settings in the relay match the settings specified to those placed into the relay.

E. Are electromechanical relays included in the "Verify that settings are as specified" maintenance activity in tables 1a and 1b?

Verification of settings is an activity directed towards the application of protection related functions of microprocessor based relays. Electromechanical relays require calibration verification by voltage and/or current injection, and thus the settings are verified during calibration activity. In the example of a time-overcurrent relay, a minor deviation in time dial, versus the settings, may be acceptable as long as the relay calibration is within accepted tolerances at the injected current amplitudes. A major deviation may require further investigation, as it could indicate a problem with the relay or an incorrect relay style for the application.

F. I use my protective relays only as sources of metered quantities and breaker status for SCADA and EMS through a substation distributed RTU or data concentrator to the control center. What are the maintenance requirements for the relays?

This standard addresses only devices "that are applied on, or are designed to provide protection for the BES." Protective relays, providing only the functions mentioned in the question, are not included.

G. I use my protective relays for fault and disturbance recording, collecting oscillographic records and event records via communications for fault analysis to meet NERC and DME requirements. What are the maintenance requirements for the relays?

For relays used only as disturbance monitoring equipment, the NERC standard PRC-018-1 R3 & R6 states the maintenance requirements, and is being addressed by a Standards activity that is revising PRC-002-1 and PRC-018-1. For protective relays "that are applied on, or are designed to provide protection for the BES," this standard applies, even if they also perform DME functions.

H. We have a number of installations where we have changed our Protection System components. Some of the changes were upgrades, but others were simply system rating changes that merely required taking relays "out-of-service". What are our responsibilities when it comes to "out-of-service" devices?

Assuming that your system uprates, upgrades and overall changes meet any and all other requirements and standards then the requirements of PRC-005-2 are simple – if the Protection system component performs a Protection system function then it must be maintained. If the component no longer performs Protection System functions than it does not require maintenance activities under the Tables of PRC-005-2. While many entities might physically remove a component that is no longer needed there is no requirement in PRC-005-2 to remove such component(s). Obviously, prudence would dictate that an "out-of-service" device is truly made inactive. There are no record requirements listed in PRC-005-2 for Protection System components not used.

I. While performing relay testing of a protective device on our Bulk Electric System it was discovered that the protective device being tested was either broken or out of calibration. Does this satisfy the relay testing requirement even though the protective device tested bad, and may be unable to be placed back into service?

Yes, PRC-005-2 requires entities to perform relay testing on protective devices on a given maintenance cycle interval. By performing this testing, the entity has satisfied PRC-005-2

requirement although the protective device may be unable to be returned to service under normal calibration adjustments. R4.3 states (the entity must):
The entity must assure either that the components are within acceptable parameters at the conclusion of the maintenance activities or initiate any necessary activities to correct unresolved maintenance correctable issues.

J. If I show the protective device out of service while it is being repaired then can I add it back as a new protective device when it returns? If not, my relay testing history would show that I was out of compliance for the last maintenance cycle.

The maintenance and testing requirements (R4.3) (in essence) state that the entity assure the components are within the owner's acceptable operating parameters, if not then actions must be initiated to correct the deviance. The type of corrective activity is not stated; however it could include repairs or replacements. Documentation is always a necessity ("*If it is not documented then it wasn't done!*")
Your documentation requirements will increase, of course, to demonstrate that your device tested bad and had corrective actions initiated. Your regional entity could very well ask for documentation showing status of your corrective actions.

K. What calibration tolerance should be applied on electromechanical relays?

Each entity establishes their own acceptable tolerances when applying protective relaying on their system. For some Protection System components, adjustment is required to bring measurement accuracy within the parameters established by the asset owner based on the specific application of the component. A calibration failure is the result if testing finds the specified parameters to be out of tolerance.

3. Voltage and Current Sensing Device Inputs to Protective Relays

A. What is meant by "…verify the current and voltage circuit inputs from the voltage and current sensing devices to the protective relays …" Do we need to perform ratio, polarity and saturation tests every few years?

No. You must verify that the protective relay is receiving the expected values from the voltage and current sensing devices (typically voltage and current transformers). This can be as difficult as is proposed by the question (with additional testing on the cabling and substation wiring to ensure that the values arrive at the relays); or simplicity can be achieved by other verification methods. While some examples follow, these are not intended to represent an all-inclusive list; technology advances and ingenuity should not be excluded from making comparisons and verifications:

- Compare the secondary values, at the relay, to a metering circuit, fed by different current transformers, monitoring the same line as the questioned relay circuit.
- Compare the individual phase secondary values at the relay panel (with additional testing on the panel wiring to ensure that the values arrive at those relays) with the other phases, and verify that residual currents are within expected bounds

- Observe all three phase currents and the residual current at the relay panel with an oscilloscope, observing comparable magnitudes and proper phase relationship, with additional testing on the panel wiring to ensure that the values arrive at the relays.

- Compare the values, as determined by the questioned relay (such as, but not limited to, a query to the microprocessor relay), to another protective relay monitoring the same line, with currents supplied by different CT's.

- Compare the secondary values, at the relay with values measured by test instruments (such as, but not limited to multi-meters, voltmeter, clamp-on ammeters, etc) and verified by calculations and known ratios to be the values expected. For example a single PT on a 100KV bus will have a specific secondary value that when multiplied by the PT ratio arrives at the expected bus value of 100KV.

- Query SCADA for the power flows at the far end of the line protected by the questioned relay, compare those SCADA values to the values as determined by the questioned relay.

- Totalize the Watts and VARs on the bus and compare the totals to the values as seen by the questioned relay.

The point of the verification procedure is to ensure that all of the individual components are functioning properly; and that, an ongoing proactive procedure is in place to re-check the various components of the protective relay measuring systems.

B. The verification of phase current and voltage measurements by comparison to other quantities seems reasonable. How, though, can I verify residual or neutral currents, or 3V0 voltages, by comparison, when my system is closely balanced?

Since these inputs are verified at commissioning, maintenance verification requires ensuring that phase quantities are as expected and that 3IO and 3VO quantities appear equal to or close to 0.

These quantities may be also verified by use of oscillographic records for connected microprocessor relays as recorded during system disturbances. Such records may compare to similar values recorded at other locations by other microprocessor relays for the same event, or compared to expected values (from short circuit studies) for known fault locations.

C. Is wiring insulation or hi-pot testing required by this Maintenance Standard?

No, wiring insulation and equipment hi-pot testing are not specifically required by the Maintenance Standard. However, if the method of verifying CT and PT inputs to the relay involves some other method than actual observation of current and voltage transformer secondary inputs to the relay, it might be necessary to perform some sort of cable integrity test to verify that the instrument transformer secondary signals are actually making it to the relay and not being shunted off to ground. For instance, you could use CT excitation tests and PT turns ratio tests and compare to baseline values to verify that the instrument transformer outputs are acceptable. However, to conclude that these acceptable transformer instrument output signals are actually making it to the relay inputs, it also would be necessary to verify the insulation of the wiring between the instrument transformer and the relay.

D. My plant generator and transformer relays are electromechanical and do not have metering functions as do microprocessor based relays. In order for me to compare the instrument transformer inputs to these relays to the secondary values of other metered instrument transformers monitoring the same primary voltage and current signals, it would be necessary to temporarily connect test equipment like voltmeters and clamp on ammeters to measure the input signals to the relays. This practice seems very risky and a plant trip could result if the technician were to make an error while measuring these current and voltage signals. How can I avoid this risk? Also, what if no other instrument transformers are available which monitor the same primary voltage or current signal?

Comparing the input signals to the relays to the outputs of other independent instrument transformers monitoring the same primary current or voltage is just one method of verifying the instrument transformer inputs to the relays but is not required by the standard. Plants can choose how to best manage their risk. If online testing is deemed too risky, offline tests such as, but not limited to, CT excitation test and PT turns ratio tests can be compared to baseline data and be used in conjunction with CT and PT secondary wiring insulation verification tests to adequately "verify the current and voltage circuit inputs from the voltage and current sensing devices to the protective relays …" while eliminating the risk of tripping an in service generator or transformer. Similarly, this same offline test methodology can be used to verify the relay input voltage and current signals to relays when there are no other instrument transformers monitoring available for purposes of signal comparison.

4. Protection System Control Circuitry

A. Is it permissible to verify circuit breaker tripping at a different time (and interval) than when we verify the protective relays and the instrument transformers?

Yes, provided the entire Protective System is tested within the individual components' maximum allowable testing intervals.

B. The Protection System Maintenance Standard describes requirements for verifying the tripping of circuit breakers. What is this telling me about maintenance of circuit breakers?

Requirements in PRC-005-2 are intended to verify the integrity of tripping circuits, including the breaker trip coil, as well as the presence of auxiliary supply (usually a dc battery) for energizing the trip coil if a protection function operates. Beyond this, PRC-005-2 sets no requirements for verifying circuit breaker performance, or for maintenance of the circuit breaker.

C. How do I test each dc Control Circuit path, as established for level 2 (partially monitored protection systems) monitoring of a "Protection System Control Circuitry (Trip coils and auxiliary relays)"?

Table 1b specifies that each breaker trip coil, auxiliary relay, and lockout relay must be operated within the specified time period. The required operations may be via targeted maintenance activities, or by documented operation of these devices for other purposes such as fault clearing.

D. What does this standard require for testing an Auxiliary Tripping Relay?

Table 1 requires that the trip test must verify that the auxiliary tripping relay(s) and/or lockout relay(s) operate(s) electrically and that their trip output(s) perform as expected. Auxiliary outputs not in a trip path (i.e. alarming or DME input) are not required to be checked.

E. What does a functional trip test include?

An operational trip test must be performed on each portion of a trip circuit. Each control circuit path that produces a trip signal must be verified; this includes trip coils, auxiliary tripping relays, lockout relays, and communications-assisted-trip schemes.

A trip test may be an overall test that verifies the operation of the entire trip scheme at once, or it may be several tests of the various portions that make up the entire trip path, provided that testing of the various portions of the trip scheme verifies all of the portions, including parallel paths, and overlaps those portions.

A circuit breaker or other interrupting device needs to be trip tested at least once per trip coil..

Discrete-component auxiliary relays and lock-out relays must be verified by trip test. The trip test must verify that the auxiliary or lock-out relay operates electrically and that the relay's trip output(s) change(s) state. Software latches or control algorithms, including trip logic processing implemented as programming component such as a microprocessor relay that take the place of (conventional) discrete component auxiliary relays or lock-out relays do not have to be routinely trip tested.

Normally-closed auxiliary contacts from other devices (for example, switchyard-voltage-level disconnect switches, interlock switches, or pressure switches) which are in the breaker trip path do not need to be tested.

F. Is a Sudden Pressure Relay an Auxiliary Tripping Relay?

No. IEEE C37.2-2008 assigns the device number 94 to auxiliary tripping relays. Sudden pressure relays are assigned device number 63, and is excluded from the Standard by footnote 1.

G. The standard specifically mentions Auxiliary and Lock-out relays; what is an Auxiliary Tripping Relay?

An auxiliary relay, IEEE Device Number 94, is described in IEEE Standard C37.2-2008 as "A device that functions to trip a circuit breaker, contactor, or equipment; to permit immediate tripping by other devices; or to prevent immediate reclosing of a circuit interrupter if it should open automatically, even though its closing circuit is maintained closed."

H. What is a Lock-out Relay?

A lock-out relay, IEEE Device Number 86, is described in IEEE Standard C37.2 as "A device that trips and maintains the associated equipment or devices inoperative until it is reset by an operator, either locally or remotely."

I. My mechanical device does not operate electrically and does not have calibration settings; what maintenance activities apply?

You must conduct a test(s) to verify the integrity of the trip circuit. This standard does not cover circuit breaker maintenance or transformer maintenance. The standard also does not cover testing of devices such as sudden pressure relays (63), temperature relays (49), and other relays which respond to mechanical parameters rather than electrical parameters.

5. Station dc Supply

A. What constitutes the station dc supply as mentioned in the definition of Protective System?

The station direct current (dc) supply normally consists of two components: the battery charger and the station battery itself. There are also emerging technologies that provide a source of dc supply that does not include either a battery or charger.

Battery Charger - The battery charger is supplied by an available ac source. At a minimum, the battery charger must be sized to charge the battery (after discharge) and supply the constant dc load. In many cases, it may be sized also to provide sufficient dc current to handle the higher energy requirements of tripping breakers and switches when actuated by the protective relays in the Protection System.

Station Battery - Station batteries provide the dc power required for tripping and for supplying normal dc power to the station in the event of loss of the battery charger. There are several technologies of battery that require unique forms of maintenance as established in Table 1.

Emerging Technologies - Station dc supplies are currently being developed that use other energy storage technologies beside the station battery to prevent loss of the station dc supply when ac power is lost. Maintenance of these station dc supplies will require different kinds of tests and inspections. Table 1 presents maintenance activities and maximum allowable testing intervals for these new station dc supply technologies. However, because these technologies are relatively new the maintenance activities for these station dc supplies may change over time.

B. In the Maintenance Activities for station dc supply in Table 1, what do you mean by "continuity"?

Because the Standard pertains to maintenance not only of the station battery, but also the whole station dc supply, continuity checks of the station dc supply are required. "Continuity" as used in Table 1 refers to verifying that there is a continuous current path from the positive terminal of the station battery set to the negative terminal, otherwise there is no way of determining that a station battery is available to supply dc current to the station.

The current path through a station battery from its positive to its negative connection to the dc control circuits is composed of two types of elements. These path elements are the electrochemical path through each of its cells and all of the internal and external metallic connections and terminations of the batteries in the battery set. If there is loss of continuity (an open circuit) in any part of the electrochemical or metallic path the battery set will not be available for service.

C. Why is it necessary to verify the continuity of the dc supply?

In the event of the loss of the ac source or battery charger, the battery must be capable of supplying dc current, both for continuous dc loads and for tripping breakers and switches. Without continuity, the battery cannot perform this function.

If the battery charger is not sized to handle the maximum dc current required to operate the protective systems, it is sized only to handle the constant dc load of the station and the charging current required to bring the battery back to full charge following a discharge. At those stations, the battery charger would not be able to trip breakers and switches if the battery experiences loss of continuity.

At generating stations and large transmission stations where battery chargers are capable of handling the maximum current required by the Protection System, there are still problems that could potentially occur when the continuity through the connected battery is interrupted.

- ◊ Many battery chargers produce harmonics which can cause failure of dc power supplies in microprocessor based protective relays and other electronic devices connected to station dc supply. In these cases, the substation battery serves as a filter for these harmonics. With the loss of continuity in the battery, the filter provided by the battery is no longer present.
- ◊ Loss of electrical continuity of the station battery will cause, regardless of the battery charger's output current capability, a delayed response in full output current from the charger. Almost all chargers have an intentional 1 to 2 second delay to switch from a low substation dc load current to the maximum output of the charger. This delay would cause the opening of circuit breakers to be delayed which could violate system performance standards.

D. How do you verify continuity of the dc supply?

Monitoring of the station dc supply voltage will not indicate that there is a problem with the dc current path through the battery unless the battery charger is taken out of service. At that time a break in the continuity of the station battery current path will be revealed because there will be no voltage on the substation dc circuitry.

Although the Standard prescribes what must be done during the maintenance activity it does not prescribe how the maintenance activity should be accomplished. There are several methods that can be used to verify the electrical continuity of the battery.

- ◊ One method is to measure that there is current flowing through the battery itself by a simple clamp on milliamp-range ammeter. A battery is always either charging or discharging. Even when a battery is charged there is still a measurable float charge current that can be detected to verify that there is continuity in the electrical path through the battery.
- ◊ A simple test for continuity is to remove the battery charger from service and verify that the battery provides voltage and current to the dc system. However, the behavior of the various dc-supplied equipment in the station should be considered before using this approach.
- ◊ Manufacturers of microprocessor based battery chargers have developed methods for their equipment to periodically (or continuously) test for battery continuity. For example, one manufacturer periodically reduces the float voltage on the battery until current from the battery to the dc load can be measured to confirm continuity.

No matter how the electrical continuity of a battery set is verified it is a necessary maintenance activity that must be performed at the intervals prescribed by Table 1 to insure that the station dc supply will provide the required current to the Protection System at all times.

E. When should I check the station batteries to see if they have sufficient energy to perform as designed?

The answer to this question depends on the type of battery (valve regulated lead-acid, vented lead acid, or nickel-cadmium), the maintenance activity chosen, and the type of time based monitoring level selected.

For example, if you have a Valve Regulated Lead-Acid (VRLA) station battery, and you have chosen to evaluate the measured cell/unit internal ohmic values to the battery cell's baseline, you will have to perform verification at a maximum maintenance interval of no greater than every three months.

If, for a VRLA station battery, you choose to conduct a performance capacity test on the entire station battery as the maintenance activity, then you will have to perform verification at a maximum maintenance interval of no greater than every 3 calendar years.

F. Why in Table 1 are there two Maintenance Activities with different Maximum Maintenance Intervals listed to verify that the station battery can perform as designed?

The two acceptable methods for proving that a station battery can perform as designed are based on two different philosophies. The first activity requires a capacity discharge test of the entire battery set to verify that degradation of one or several components (cells) in the set has not deteriorated to a point where the total capacity of the battery system falls below its designed rating. The second maintenance activity requires tests and evaluation of the internal ohmic measurements on each of the individual cells/units of the battery set to determine that each component can perform as designed and therefore the entire battery set can be verified to perform as designed.

The maximum maintenance interval for discharge capacity testing is longer than the interval for testing and evaluation of internal ohmic cell measurements. An individual component of a battery set may degrade to an unacceptable level without causing the total battery set to fall below its designed rating under capacity testing. However, since the philosophy behind internal ohmic measurement evaluation is based on the fact that each battery component must be verified to be able to perform as designed, the interval for verification by this maintenance activity must be shorter to catch individual cell/unit degradation.

G. What is the justification for having two different Maintenance Activities listed in Table 1 to verify that the station battery can perform as designed?

IEEE Standards 450, 1188, and 1106 for vented lead-acid, valve-regulated lead-acid (VRLA), and nickel-cadmium batteries, respectively (which together are the most commonly used substation batteries on the BES) go into great detail about capacity testing of the entire battery set to determine that a battery can perform as designed.

The first maintenance activity listed in Table 1 for verifying that a station battery can perform as designed uses maximum maintenance intervals for capacity testing that were designed to

align with the IEEE battery standards. This maintenance activity is applicable for vented lead-acid, valve-regulated lead-acid, and nickel-cadmium batteries.

The second maintenance activity listed in Table 1 for verifying that a station battery can perform as designed uses maximum maintenance intervals for evaluating internal ohmic measurements in relation to their baseline measurements that are based on industry experience, EPRI technical reports and application guides, and the IEEE battery standards. By evaluating the internal ohmic measurements for each cell and comparing that measurement to the cell's baseline ohmic measurement (taken at the time of the battery set's acceptance capacity test), low-capacity cells can be identified and eliminated to keep the battery set capable of performing as designed. This maintenance activity is applicable only for vented lead-acid and VRLA batteries.

H. Why in Table 1 of PRC-005-2 is there a maintenance activity to inspect the structural intergrity of the battery rack?

The three IEEE standards (1188, 450, and 1106) for VRLA, vented lead-acid, and nickel-cadmium batteries all recommend that as part of any battery inspection the battery rack should be inspected. The purpose of this inspection is to verify that the battery rack is correctly installed and has no deterioration that could weaken its structural integrity. Because the battery rack is specifically designed for the battery that is mounted on it, weakening of its structural members by rust or corrosion can physically jeopardize the battery.

I. What is required to comply with the "Unintentional Grounds" requirement?

In most cases, the first ground that appears on a battery pole is not a problem. It is the unintentional ground that appears on the opposite pole that becomes problematic. Even then many systems are designed to operate favorably under some unintentional DC ground situations. It is up to the owner of the Protection System to determine if corrective actions are needed on unintentional DC grounds. The standard merely requires that a check be made for the existence of Unintentional DC Grounds. Obviously a "check-off" of some sort will have to be devised to demonstrate that a check is routinely done for Unintentional DC Grounds.

J. Where the standard refers to "all cells" is it sufficient to have a documentation method that refers to "all cells" or do we need to have separate documentation for every cell? For example to I need 60 individual documented check-offs for good electrolyte level or would a single check-off per bank be sufficient??

A single check-off per battery bank is sufficient.

K. Does this standard refer to Station batteries or all batteries, for example Communication Site Batteries?

This standard refers to Station Batteries. The drafting team does not believe that the scope of this standard refers to communication sites. The batteries covered under PRC-005-2 are the batteries that supply the trip current to the trip coils of the interrupting devices that are a part of the Protection System.

6. Protection System Communications Equipment

A. What are some examples of mechanisms to check communications equipment functioning?

For Level 1 unmonitored Protection Systems, various types of communications systems will have different facilities for on-site integrity checking to be performed at least every three months during a substation visit. Some examples are:

- ◊ On-off power-line carrier systems can be checked by performing a manual carrier keying test between the line terminals, or carrier checkback test from one terminal.
- ◊ Systems which use frequency-shift communications with a continuous guard signal (over a telephone circuit, analog microwave system, etc.) can be checked by observing a loss-of-guard indication or alarm. For frequency-shift power line power-line carrier systems, the guard signal level meter can also be checked.
- ◊ Hard-wired pilot wire line Protection Systems typically have pilot-wire monitoring relays that give an alarm indication for a pilot wire ground or open pilot wire circuit loop.
- ◊ Digital communications systems have some sort of data reception indicator or data error indicator (based on loss of signal, bit error rate, or frame error checking).

For Level 2 partially monitored Protection Systems, various types of communications systems will have different facilities for monitoring the presence of the communications channel, and activating alarms that can be monitored remotely. Some examples are:

- ◊ On-off power-line carrier systems can be shown to be operational by automated periodic power-line carrier checkback tests, with remote alarming of failures.
- ◊ Systems which use a frequency-shift communications with a continuous guard signal (over a telephone circuit, analog microwave system, etc.) can be remotely monitored with a loss-of-guard alarm or low signal level alarm.
- ◊ Hard-wired pilot wire line Protection Systems can be monitored by remote alarming of pilot-wire monitoring relays.
- ◊ Digital communications systems can activate remotely monitored alarms for data reception loss or data error indications.

For Level 3 fully monitored Protection Systems, the communications system must monitor all aspects of the performance and quality of the channel that show it meets the design performance criteria, including monitoring of the channel interface to protective relays.

- ◊ In many communications systems signal quality measurements including signal-to-noise ratio, received signal level, reflected transmitter power or standing wave ratio, propagation delay, and data error rates are compared to alarm limits. These alarms are connected for remote monitoring.
- ◊ Alarms for inadequate performance are remotely monitored at all times, and the alarm communications system to the remote monitoring site must itself be continuously monitored to assure that the actual alarm status at the communications equipment location is continuously being reflected at the remote monitoring site.

B. What is needed for the 3-month inspection of communication-assisted trip scheme equipment?

The 3-month inspection applies to Level 1 (Unmonitored) equipment. An example of compliance with this requirement might be, but is not limited to:

With each site visit, check that the equipment is free from alarms, check any metered signal levels, and that power is still applied. While this might be explicit for a particular type of equipment (ie FSK equipment), the concept should be that the entity verify that the communications equipment that is used in a Protection System is operable through a cursory inspection and site visit. This site visit can be eliminated on this particular example if the FSK equipment had a monitored alarm on Loss of Guard.

C. Does a fiber optic I/O scheme used for breaker tripping or control within a station, for example - transmitting a trip signal or control logic between the control house and the breaker control cabinet, constitute a communication system?

This equipment is presently classified as being part of the Protection System Control Circuitry and tested per the portions of Table 1 applicable to Protection System Control Circuitry rather than those portions of the table applicable to communication equipment.

D. In Table 1b, the Maintenance Activities section of the Protective System Communications Equipment and Channels refers to the quality of the channel meeting "performance criteria". What is meant by performance criteria?

Protection System communications channels must have a means of determining if the channel and communications equipment is operating normally. If the channel is not operating normally an alarm will be indicated. For Level 1 systems this alarm will probably be on the panel. For Level 2 and Level 3 systems, the alarm will be transmitted to a remote location.

Each entity will have established a nominal performance level for each protective system communications channel that is consistent with proper functioning of the Protection System. If that level of nominal performance is not being met, the system will go into alarm. Following are some examples of protective system communications channel performance criteria:

- ◊ For direct transfer trip using a frequency shift power line carrier channel, a guard level monitor is part of the equipment. A normal receive level is established when the system is calibrated and if the signal level drops below an established level, the system will indicate an alarm.
- ◊ An on-off blocking signal over power line carrier is used for directional comparison blocking schemes on transmission lines. During a fault, block logic is sent to the remote relays by turning on a local transmitter and sending the signal over the power line to a receiver at the remote end. This signal is normally off so continuous levels cannot be checked. These schemes use checkback testing to determine channel performance. A predetermined signal sequence is sent to the remote end and the remote end decodes this signal and sends a signal sequence back. If the sending end receives the correct information from the remote terminal, the test passes and no alarm is indicated. Full power and reduced power tests are typically run. Power levels for these tests are determined at the time of calibration.
- ◊ Pilot wire relay systems use a hardwire communications circuit to communicate between the local and remote ends of the protective zone. This circuit is monitored by circulating a dc current between the relay systems. A typical level may be 1 mA. If the level drops below the setting of the alarm monitor, the system will indicate an alarm.
- ◊ Modern digital relay systems use data communications to transmit relay information to the remote end relays. An example of this is a line current differential scheme commonly used on transmission lines. The protective relays communicate current magnitude and phase

information over the communications path to determine if the fault is located in the protective zone. Quantities such as digital packet loss, bit error rate and channel delay are monitored to determine the quality of the channel. These limits are determined and set during relay commissioning. Once set, any channel quality problems that fall outside the set levels will indicate an alarm.

The previous examples show how some protective relay communications channels can be monitored and how the channel performance can be compared to performance criteria established by the entity. This standard does not state what the performance criteria will be - it just requires that the entity establish nominal criteria so protective system channel monitoring can be performed.

7. UVLS and UFLS Relays that Comprise a Protection System Distributed Over the Power System

A. We have an Under Voltage Load Shedding (UVLS) system in place that prevents one of our distribution substations from supplying extremely low voltage in the case of a specific transmission line outage. The transmission line is part of the BES. Does this mean that our UVLS system falls within this standard?

The situation as stated indicates that the tripping action was intended to prevent low distribution voltage for a transmission system that was intact except for the line that was out of service.

This Standard is not applicable to this UVLS.

B. We have a UFLS scheme that sheds the necessary load through distribution-side circuit breakers and circuit reclosers. Do the trip-test requirements for circuit breakers apply to our situation?

No. Distributed tripping schemes would have to exhibit multiple failures to trip before they would prove to be significant as opposed to a single failure to trip of, for example, a Transmission Protection System Bus Differential Lock-Out Relay. While many failures of these distribution breakers could add up to be significant, it is also believed that distribution breakers are operated often on just fault clearing duty and therefore the distribution circuit breakers are operated at least as frequently as any requirements that might have appeared in this standard.

C. What does “distributed over the power system” mean?

This refers to the common practice of applying UFLS on the distribution system, with each UFLS individually tripping a relatively low value of load. Therefore, the program is implemented via a large number of individual UFLS components performing independently, and the failure of any individual component to perform properly will have a minimal impact on the effectiveness of the overall UFLS program. Some UVLS systems are applied similarly.

8. SPS or Relay Sensing for Centralized UFLS or UVLS

A. Do I have to perform a full end-to-end test of a Special Protection System?

No. All portions of the SPS need to be maintained, and the portions must overlap, but the overall SPS does not need to have a single end-to-end test.

B. What about SPS interfaces between different entities or owners?

All SPS owners should have maintenance agreements that state which owner will perform specific tasks. SPS segments can be tested individually, but must overlap.

C. What do I have to do if I am using a phasor measurement unit (PMU) as part of a Protection System or Special Protection System?

Any Phasor Measurement Unit (PMU) function whose output is used in a protection system or Special Protection System (as opposed to a monitoring task) must be verified as a component in a Protection System.

D. How do I maintain a Special Protection System or Relay Sensing for Centralized UFLS or UVLS Systems?

Components of the SPS, UFLS, or UVLS should be maintained like similar components used for other Protection System functions.

The output action verification may be breaker tripping, or other control action that must be verified, but may be verified in overlapping segments. A grouped output control action need be verified only once within the specified time interval, but all of the SPS, UFLS, or UVLS components whose operation leads to that control action must each be verified.

E. What does "centralized" mean?

This refers to the practice of applying sensing units at many locations over the system, with all these components providing intelligence to an analytical system which then directs action to address a detected condition. In some cases, this action may not take place at the same location as the sensing units. This approach is often applied for complex SPS, and may be used for UVLS where necessary to address the conditions of concern.

III Group by Type of BES Facility:

1. All BES Facilities

A. What, exactly, is the BES, or Bulk Electric System?

BES is the abbreviation for Bulk Electric System. BES is a term in the Glossary of Terms Used in Reliability Standards, and is not being modified within this draft Standard.

NERC's approved definition of Bulk Electric System is:

> As defined by the Regional Reliability Organization, the electrical generation resources, transmission lines, interconnections with neighboring systems, and associated equipment, generally operated at voltages of 100 kV or higher. Radial transmission facilities serving only load with one transmission source are generally not included in this definition.

Each Regional Entity implements a definition of the Bulk Electric System that is based on this NERC definition, in some cases, supplemented by additional criteria. These regional

definitions have been documented and provided to FERC as part of a *June 16, 2007 Informational Filing*.

2. Generation

A. Please provide a sample list of devices or systems that must be verified in a generator, generator step-up transformer, and generator connected station auxiliary transformer to meet the requirements of this Maintenance Standard.

Examples of typical devices and systems that may directly trip the generator, or trip through a lockout relay may include but are not necessarily limited to:

- Fault protective functions, including distance functions, voltage-restrained overcurrent functions, or voltage-controlled overcurrent functions
- Loss-of-field relays
- Volts-per-hertz relays
- Negative sequence overcurrent relays
- Over voltage and under voltage protection relays
- Stator-ground relays
- Communications-based protection systems such as transfer-trip systems
- Generator differential relays
- Reverse power relays
- Frequency relays
- Out-of-step relays
- Inadvertent energization protection
- Breaker failure protection

For generator step up or generator-connected station auxiliary transformers, operation of any the following associated protective relays frequently would result in a trip of the generating unit and, as such, would be included in the program:

- Transformer differential relays
- Neutral overcurrent relay
- Phase overcurrent relays

A loss of a system-connected station auxiliary transformer could result in a loss of the generating plant if the plant was being provided with auxiliary power from that source, and this auxiliary transformer may directly affect the ability to start up the plant and to connect the plant to the system. Thus, operation of any of the following relays associated with system-connected station auxiliary transformers would be included in the program:

- Transformer differential relays
- Neutral overcurrent relay
- Phase overcurrent relays

Relays which trip breakers serving station auxiliary loads such as pumps, fans, or fuel handling equipment, etc., need not be included in the program even if the loss of the those loads could result in a trip of the generating unit. Furthermore, relays which provide protection to secondary unit substation (SUS) or low switchgear transformers and relays protecting other downstream plant electrical distribution system components are not included in the scope of

this program even if a trip of these devices might eventually result in a trip of the generating unit.

3. Transmission

A. Why is Distribution Provider included within the Applicable Entities and as a responsible entity within several of the requirements? Wouldn't anyone having relevant facilities be a Transmission Owner?

Depending on the station configuration of a particular substation, there may be Protection System equipment installed at a non-transmission voltage level (Distribution Provider equipment) that is wholly or partially installed to protect the BES. PRC-005-2 would apply to this equipment. An example is underfrequency load-shedding, which is frequently applied well down into the distribution system to meet PRC-007-0.

IV Group by Type of Maintenance Program:

1. All Protection System Maintenance Programs

A. I can't figure out how to demonstrate compliance with the requirements for level 3 (fully monitored) Protection Systems. Why does this Maintenance Standard describe a maintenance program approach I cannot achieve?

Demonstrating compliance with the requirements for level 3 (fully monitored) Protection Systems is likely to be very involved, and may include detailed manufacturer documentation of complete internal monitoring within a device, comprehensive design drawing reviews, and other detailed documentation. This Standard does not presume to specify what documentation must be developed; only that it must be comprehensive.

There may actually be some equipment available that is capable of meeting level-3 monitoring criteria, in which case it may be maintained according to Table 1c. However, even if there is no equipment available today that can meet this level of monitoring, the Standard establishes the necessary requirements for when such equipment becomes available.

By creating a roadmap for development, this provision makes the Standard technology-neutral. The standard drafting team wants to avoid the need to revise the Standard in a few years to accommodate technology advances that are certainly coming to the industry.

B. What forms of evidence are acceptable?

Acceptable forms of evidence, as relevant for the Requirement being documented, include but are not limited to:

- Process documents or plans
- Data (such as relay settings sheets, photos, SCADA, and test records)
- Database screen shots that demonstrate compliance information
- Diagrams, engineering prints, schematics, maintenance and testing records, etc.
- Logs (operator, substation, and other types of log)
- Inspection forms
- U.S. or Canadian mail, memos, or email proving the required information was exchanged, coordinated, submitted or received
- Database lists and records

- Check-off forms (paper or electronic)
- Any record that demonstrates that the maintenance activity was known and accounted for.

C. If I replace a failed Protection System component with another component, what testing do I need to perform on the new component?

The replacement component must be tested to a degree that assures that it will perform as intended. If it is desired to reset the Table 1 maintenance interval for the replacement component, all relevant Table 1 activities for the component should be performed.

D. Please use a specific example to demonstrate the data retention requirements.

The data retention requirements are intended to allow the availability of maintenance records to demonstrate that the time intervals in your maintenance plan were upheld. For example: "Company A" has a maintenance plan that requires its electro-mechanical protective relays be tested, for routine scheduled tests, every 3 calendar years with a maximum allowed grace period of an additional 18 months. This entity would be required to maintain its records of maintenance of its last two routine scheduled tests. Thus its test records would have a latest routine test as well as its previous routine test. The interval between tests is therefore provable to an auditor as being within "Company A's" stated maximum time interval of 4.5 years.

The intent is not to have three test results proving two time intervals, but rather have two test results proving the last interval. The drafting team contends that this minimizes storage requirements while still having minimum data available to demonstrate compliance with time intervals.

If an entity prefers to utilize Performance Based Maintenance then statistical data may well be retained for extended periods to assist with future adjustments in time intervals.

2. Time-Based Protection System Maintenance (TBM) Programs

A. What does this Maintenance Standard say about commissioning? Is it necessary to have documentation in your maintenance history of the completion of commission testing?

This standard does not establish requirements for commission testing. Commission testing includes all testing activities necessary to conclude that a facility has been built in accordance with design. While a thorough commission testing program would include, either directly or indirectly, the verification of all those Protection System attributes addressed by the maintenance activities specified on Table 1a of PRC-005-2, verification of the adequacy of initial installation necessitates the performance of testing and inspections that go well beyond these routine maintenance activities.

However, many of the Protection System attributes which are verified during commission testing are not subject to age related or service related degradation and need not be re-verified within an ongoing maintenance program. Example – it is not necessary to re-verify correct terminal strip wiring on an ongoing basis.

PRC-005-2 assumes that thorough commission testing was performed prior to a protection system being placed in service. PRC-005-2 requires performance of maintenance activities that are deemed necessary to detect and correct plausible age and service related degradation of components such that a properly built and commission tested Protection System will continue to function as designed over its service life.

It should be noted that commission testing frequently is performed by a different organization than that which is responsible for the ongoing maintenance of the Protection System. Furthermore, the commission testing activities will not necessarily correlate directly with the maintenance activities required by the standard. As such, it is very likely that commission testing records will deviate significantly from maintenance records in both form and content and therefore, it is not necessary to maintain commission testing records within the maintenance program documentation.

An entity would be wise to retain commissioning records to show a maintenance start date. (See next FAQ).

B. How do you determine the initial due date for maintenance?

The initial due date for maintenance should be based upon when a facility and its associated Protection System were placed in service. Alternatively, an entity may choose to use the date of completion of the commission testing of the Protection System component as the starting point in determining its first maintenance due dates. Whichever method is chosen, for newly installed Protection Systems the maintenance program should clearly identify when maintenance is first due.

C. The established maximum allowable intervals do not align well with the scheduled outages for my power plant. Can I extend the maintenance to the next scheduled outage following the established maximum interval?

No. You must complete your maintenance within the established maximum allowable intervals in order to be compliant. You will need to schedule your maintenance during available outages to complete your maintenance as required, even if it means that you may do protective relay maintenance more frequently than the maximum allowable intervals.

D. If I am unable to complete the maintenance as required due to a major natural disaster (hurricane, earthquake, etc), how will this affect my compliance with this standard.

The NERC Sanction Guidelines provides that the Compliance Monitor will consider extenuating circumstances when considering any sanctions.[1]

E. What if my observed testing results show a high incidence of out-of-tolerance relays, or, even worse, I am experiencing numerous relay misoperations due to the relays being out-of-tolerance?

Any entity can choose to test some or all of their Protection System more frequently (or, to express it differently, exceed the minimum requirements of the Standard). Particularly, if you find that the maximum intervals in the Standard do not achieve your expected level of performance, it is understandable that you would maintain the related equipment more frequently.

F. We believe that the 3-month interval between inspections is unneccessary, why can we not perform these inspections twice per year?

The standard drafting team believes that routine monthly inspections are the norm. To align routine station inspections with other important inspections the 3-month interval was chosen. In

1 Sanction Guidelines of the North American Electric Reliability Corporation. Effective January 15, 2008.

lieu of station visits many activities can be accomplished with automated monitoring and alarming.

G. Our maintenance plan calls for us to perform routine protective relay tests every 3 years; if we are unable to achieve this schedule but we are able to complete the procedures in less than the Maximum Time Interval then are we in or out of compliance?

You are out of compliance. You must maintain your equipment to your stated intervals within your maintenance plan. The protective relays (and any Protection System component) cannot be tested at intervals that are longer than the maximum allowable interval stated in the Tables. Therefore you should design your maintenance plan such that it is not in conflict with the Minimum Activities and the Maximum Intervals. You then must maintain your equipment according to your maintenance plan.

3. Performance-Based Protection System Maintenance (PBM) Programs

A. I'm a small entity and cannot aggregate a population of Protection System components to establish a segment required for a Performance-Based Protection System Maintenance Program. How can I utilize that opportunity?

Multiple asset owning entities may aggregate their individually owned populations of individual Protection System components to create a segment that crosses ownership boundaries. All entities participating in a joint program should have a single documented joint management process, with consistent Protection System Maintenance Programs (practices, maintenance intervals and criteria), for which the multiple owners are individually responsible with respect to the requirements of the Standard. The requirements established for performance-based maintenance must be met for the overall aggregated program on an ongoing basis.

The aggregated population should reflect all factors that affect consistent performance across the population, including any relevant environmental factors such as geography, power-plant vs. substation, and weather conditions.

B. Can an owner go straight to a performance-based maintenance program schedule, if they have previously gathered records?

Yes. An owner can go to a performance-based maintenance program immediately. The owner will need to comply with the requirements of a performance-based maintenance program as listed in the standard. Gaps in the data collected will not be allowed; therefore, if an owner finds that a gap exists such that they can not prove that they have collected the data as required for a performance-based maintenance program then they will need to wait until they can prove compliance.

C. When establishing a performance-based maintenance program, can I use test data from the device manufacturer, or industry survey results, as results to help establish a basis for my performance-based intervals?

No. You must use actual in-service test data for the components in the segment.

D. What types of misoperations or events are not considered countable events in the performance-based Protection System Maintenance (PBM) Program?

Countable events are intended to address conditions that are attributed to hardware failure or calibration failure; that is, conditions that reflect deteriorating performance of the component. These conditions include any condition where the device previously worked properly, then, due to changes within the device, malfunctioned.

Human errors resulting in Protection System Misoperations during system installation or maintenance activities are not considered countable events. Examples of excluded human errors include relay setting errors, design errors, wiring errors, inadvertent tripping of devices during testing or installation, and misapplication of Protection System components. Examples of misapplication of Protection System components include wrong CT or PT tap position, protective relay function misapplication, and components not specified correctly for their installation.

Certain types of Protection System component errors that cause Misoperations are not considered countable events. Examples of excluded component errors include device malfunctions that are correctable by firmware upgrades and design errors that do not impact protection function.

E. What are some examples of methods of correcting segment perfomance for Performance-Based Maintenance?

There are a number of methods that may be useful for correcting segment performance for mal-performing segments in a performance-based maintenance system. Some examples are listed below.

- The maximum allowable interval, as established by the performance-based maintenance system, can be decreased. This may, however, be slow to correct the performance of the segment.
- Identifiable sub-groups of components within the established segment, which have been identified to be the mal-performing portion of the segment, can be broken out as an independent segment for target action. Each resulting segment must satisfy the minimum population requirements for a performance-based maintenance program in order to remain within the program.
- Targeted corrective actions can be taken to correct frequently occurring problems. An example would be replacement of capacitors within electromechanical distance relays if bad capacitors were determined to be the cause of the mal-performance.
- Components within the mal-performing segment can be replaced with other components (electromechanical distance relays with microprocessor relays, for example) to remove the mal-performing segment.

F. If I find (and correct) a maintenance-correctable issue as a result of a misoperation investigation (Re: PRC-004), how does this affect my performance-based maintenance program?

If you perform maintenance on a Protection System component for any reason (including as part of a PRC-004 required misoperation investigation/corrective action), the actions performed

count as a maintenance activity, and "reset the clock" on everything you've done. In a performance-based maintenance program, you also need to record the maintenance-correctable issue with the relevant component group and use it in the analysis to determine your correct performance-based maintenance interval for that component group.

G. Why are batteries excluded from PBM? What about exclusion of batteries from condition based maintenance?

Batteries are the only element of a Protection System that is a perishable item with a shelf life. As a perishable item batteries require not only a constant float charge to maintain their freshness (charge), but periodic inspection to determine if there are problems associated with their aging process and testing to see if they are maintaining a charge or can still deliver their rated output as required.

Besides being perishable, a second unique feature of a battery that is unlike any other Protection System element is that a battery uses chemicals, metal alloys, plastics, welds, and bonds that must interact with each other to produce the constant dc source required for Protection Systems, undisturbed by ac system disturbances.

No type of battery manufactured today for Protection System application is free from problems that can only be detected over time by inspection and test. These problems can arise from variances in the manufacturing process, chemicals and alloys used in the construction of the individual cells, quality of welds and bonds to connect the components, the plastics used to make batteries and the cell forming process for the individual battery cells.

Other problems that require periodic inspection and testing can result from transportation from the factory to the job site, length of time before a charge is put on the battery, the method of installation, the voltage level and duration of equalize charges, the float voltage level used, and the environment that the battery is installed in.

All of the above mentioned factors and several more not discussed here are beyond the control of the Functional Entities that want to use a performance-based Protection System Maintenance (PBM) program. These inherent variances in the aging process of a battery cell make establishment of a designated segment based on manufacturer and type of battery impossible.

The whole point of PBM is that if all variables are isolated then common aging and performance criteria would be the same. However, there are too many variables in the electro-chemical process to completely isolate all of the performance-changing criteria.

Similarly Functional Entities that want to establish a condition-based maintenance program using Level 3 monitoring of the battery used in a station dc supply can not do so. Inspection of the battery is required on a Maximum Maintenance Interval listed in the tables due to the aging processes of station batteries. However, Level 3 monitoring of a battery can eliminate the requirement for periodic testing and some inspections (see Level 3 Monitoring Attributes for Component of table 1c).

H. Please provide an example of the calculations involved in extending maintenance time intervals using PBM.

Entity has 1000 GE-HEA lock-out relays; this is greater than the minimum sample requirement of 60. They start out testing all of the relays within the prescribed Table requirements (6 year

max) by testing the relays every 5 years. The entity's plan is to test 200 units per year; this is greater than the minimum sample size requirement of 30.

- For the sake of example only the following will show 6 failures per year, reality may well have different numbers of failures every year. PBM requires annual assessment of failures found per units tested.

After the first year of tests the entity finds 6 failures in the 200 units tested. 6/200= 3% failure rate.

- This entity is now allowed to extend the maintenance interval if they choose.

The entity chooses to extend the maintenance interval of this population segment out to 10 years.

- This represents a rate of 100 units tested per year; entity selects 100 units to be tested in the following year.
- After that year of testing these 100 units the entity again finds 6 failed units. 6/100= 6% failures.
- This entity has now exceeded the acceptable failure rate for these devices and must accelerate testing of all of the units at a higher rate such that the failure rate is found to be less than 4% per year; the entity has three years to get this failure rate down to 4% or less (per year).

In response to the 6% failure rate, the entity decreases the testing interval to 8 years. This means that they will now test 125 units per year (1000/8). The entity has just two years left to get the test rate corrected.

- After a year they again find 6 failures out of the 125 units tested. 6/125= 5% failures.

In response to the 5% failure rate, the entity decreases the testing interval to 7 years. This means that they will now test 143 units per year (1000/7). The entity has just one year left to get the test rate corrected.

- After a year they again find 6 failures out of the 143 units tested. 6/143= 4.2% failures.

(Note that the entity has tried 5 years and they were under the 4% limit and they tried 7 years and they were over the 4% limit. They must be back at 4% failures or less in the next year so they might simply elect to go back to 5 years.)

Instead, in response to the 5% failure rate, the entity decreases the testing interval to 6 years. This means that they will now test 167 units per year (1000/6).

- After a year they again find 6 failures out of the 167 units tested. 6/167= 3.6% failures.

Entity found that they could maintain the failure rate at no more than 4% failures by maintaining the testing interval at 6 years or less. Entity chose 6 year interval and effectively extended their TBM (5 years) program by 20%.

A note of practicality is that an entity will probably be in better shape to lengthen the intervals between tests if the failure rate is less than 2%. But the requirements allow for annual adjustments if the entity desires. As a matter of maintenance management, an ever-changing test rate (units tested / year) may be un-workable.

Note that the "5% of components" requirement effectively sets a practical limit of 20 year maximum PBM interval. Also of note is the "3 years" requirement; this is there to prevent an entity from "gaming the system". An entity might arbitrarily extend time intervals from 6 years

to 20 years. In the event that an entity finds a failure rate greater than 4% then the test rate must be accelerated such that within three years the failure rate must be brought back down to 4% or less.

Here is a table that demonstrates the values discussed:

Year #	Total Population (P)	Test Interval (I)	Units to be Tested (U= P/I)	# of Failures Found (F)	Failure Rate (=F/U)	Decision to Change Interval Yes or No	Interval Chosen
1	1000	5 yrs	200	6	3%	Yes	10 yrs
2	1000	10 yrs	100	6	6%	Yes	8 yrs
3	1000	8 yrs	125	6	5%	Yes	7 yrs
4	1000	7 yrs	143	6	4.2%	Yes	6 yrs
5	1000	6 yrs	167	6	3.6%	No	6 yrs

V Group by Monitoring Level:

1. All Monitoring Levels

A. Please provide an example of the level 1 monitored (unmonitored) versus other levels of monitoring available?

A level 1 (Unmonitored) Protection System has no monitoring and alarm circuits on the Protection System components.

A level 2 (Partially) monitored Protection System or an individual component of a level 2 (Partially) monitored Protection System has monitoring and alarm circuits on the Protection System components. The alarm circuits must alert a 24-hr staffed operations center.

There can be a combination of monitored and unmonitored Protection Systems within any given substation or plant; there can also be a combination of monitored and unmonitored components within any given Protection System.

Example #1: A combination of level 2 (Partially) monitored and level 1 (unmonitored) components within a given Protection System is:

- ◊ A microprocessor relay with an internal alarm connected to SCADA to alert 24-hr staffed operations center. (level 2)
- ◊ Instrumentation transformers, with no monitoring, connected as inputs to that relay. (level 1)
- ◊ A vented lead-acid battery with low voltage alarm connected to SCADA. (level 2)
- ◊ A circuit breaker with a trip coil, with no monitor circuit. (level 1)

Given the particular components, conditions, and using the Table 1 ("Maximum Allowable Testing Intervals and Maintenance Activities"), the particular components have maximum test intervals of:

- ◊ The microprocessor relay is verified every 12 calendar years.
- ◊ The instrumentation transformers are verified every 12 calendar years.
- ◊ The battery is verified every 6 calendar years by performing a performance capacity test of the entire battery bank or by evaluating the measured cell/unit internal ohmic values to station battery baseline every 18 months.
- ◊ The circuit breaker trip circuits and auxiliary relays are tested every 6 calendar years.

Example #2: A combination of level 2 (partially) monitored and level 1 (unmonitored) components within a given Protection System is:

- ◊ A microprocessor relay with integral alarm that is not connected to SCADA. (level 1)
- ◊ Instrument transformers, with no monitoring, connected as inputs to that relay. (level 1)
- ◊ A vented lead-acid battery with low voltage alarm connected to SCADA. (level 2)
- ◊ A circuit breaker with a trip coil, with no circuits monitored. (level 1)

Given the particular components, conditions, and using the Table 1 ("Maximum Allowable Testing Intervals and Maintenance Activities"), the particular components have maximum test intervals of:

- ◊ The microprocessor relay is verified every 6 calendar years.
- ◊ The instrumentation transformers are verified every 12 calendar years.
- ◊ The battery is verified every 6 calendar years by performing a performance capacity test of the entire battery bank or by evaluating the measured cell/unit internal ohmic values to station battery baseline every 18 months.
- ◊ The circuit breaker trip circuits and auxiliary relays are tested every 6 calendar years.

Example #3: A combination of level 2 (partially) monitored and level 1 (unmonitored) components within a given Protection System is:

- ◊ A microprocessor relay with alarm connected to SCADA to alert 24-hr staffed operations center. (level 2)
- ◊ Instrument transformers, with no monitoring, connected as inputs to that relay (level 1)
- ◊ Battery without any alarms connected to SCADA (level 1)
- ◊ Circuit breaker with a trip coil, with no circuits monitored (level 1)

Given the particular components, conditions, and using the Table 1 ("Maximum Allowable Testing Intervals and Maintenance Activities"), the particular components shall have maximum test intervals of:

- ◊ The microprocessor relay is verified every 12 calendar years.
- ◊ The instrument transformers are verified every 12 calendar years.
- ◊ The battery is verified every 3 months, every 18 months, plus, depending upon the type of battery used it may be verified at other maximum test intervals, as well.
- ◊ The circuit breaker trip circuits and auxiliary relays are tested every 6 calendar years.

B. What is the intent behind the different levels of monitoring?

The intent behind different levels of monitoring is to allow less frequent manual intervention when more information is known about the condition of Protection System components.

C. Do all monitoring levels apply to all components in a protection system?

No. For some components in a protection system, certain levels of monitoring will not be relevant. See table below:

D. My microprocessor relays and dc circuit alarms are contained on relay panels in a 24-hour attended control room. Does this qualify as an extended time interval condition-based system?

Yes, provided the station attendant monitors the alarms and other indications and reports them within the given time limits that are stated in the criteria of the Table 1b or Table 1c.

Monitoring Level Applicability Table

(See related definition and decision tree for various level requirements)

Protection Component	Level 1 (Unmonitored)	Level 2 (Partially Monitored)	Level 3 (Fully Monitored)
Protective relays	Y	Y	Y
Instrument transformer Inputs to Protective Relays	Y	N	Y
Protection System control circuitry (Other than aux-relays & lock-out relays)	Y	Y	Y
Aux-relays & lock-out relays	Y	N	N
DC supply (other than station batteries)	Y	Y	Y
Station batteries	Y	N	N
Protection system communications equipment and channels	Y	Y	Y
UVLS and UFLS relays that comprise a protection scheme distributed over the power system	Y	Y	Y
SPS, including verification of end-to-end performance, or relay sensing for centralized UFLS or UVLS systems	Y	Y	Y

Y = Monitoring Level Applies
N = Monitoring Level Not Applicable

E. When documenting the basis for inclusion of components into the appropriate levels of monitoring as per Requirement R2 of the standard, is it necessary to provide this documentation via a device by device listing of components and the specific monitoring attributes of each device?

No. While maintaining this documentation on the device level would certainly be permissible, it is not necessary. Global statements can be made to document appropriate levels of monitoring for the entire population of a component type or portion thereof.

For example, it would be permissible to document the conclusion that all BES substation dc systems are Level 2 - Partially Monitored by stating the following within the program description:

> "All substation dc systems are considered Level 2 - Partially Monitored and subject to Table 1b requirements as all substation dc systems are equipped with dc voltage alarms and ground detection alarms that are sent to the manned control center."

Similarly, it would be acceptable to use a combination of a global statement and a device level list of exclusions. Example:

> "Except as noted below, all substation dc systems are considered Level 2 - Partially Monitored and subject to Table 1b requirements as all substation dc systems are equipped with dc voltage alarms and ground detection alarms that are sent to the manned control center. The dc systems of Substation X, Substation Y, and Substation Z are considered Level 1 - Unmonitored and subject to Table 1a requirements as they are not equipped with ground detection capability."

Regardless whether this documentation is provided via a device by device listing of monitoring attributes, by global statements of the monitoring attributes of an entire population of component types, or by some combination of these methods, it should be noted that auditors may request supporting drawings or other documentation necessary to validate the inclusion of the device(s) within the appropriate level of monitoring. This supporting background information need not be maintained within the program document structure but should be retrievable if requested by an auditor.

F. How do I know what monitoring level I am under? – Include Decision Trees

Decision Trees are provided below for each of the following categories of equipment to assist in the determination of the level of monitoring.

- ◊ Protective Relays
- ◊ Current and Voltage Sensing Devices
- ◊ Protection System Control Circuitry
- ◊ Station dc Supply
- ◊ Protection System Communication Systems

RELAY
MONITOR LEVEL
DECISION TREE

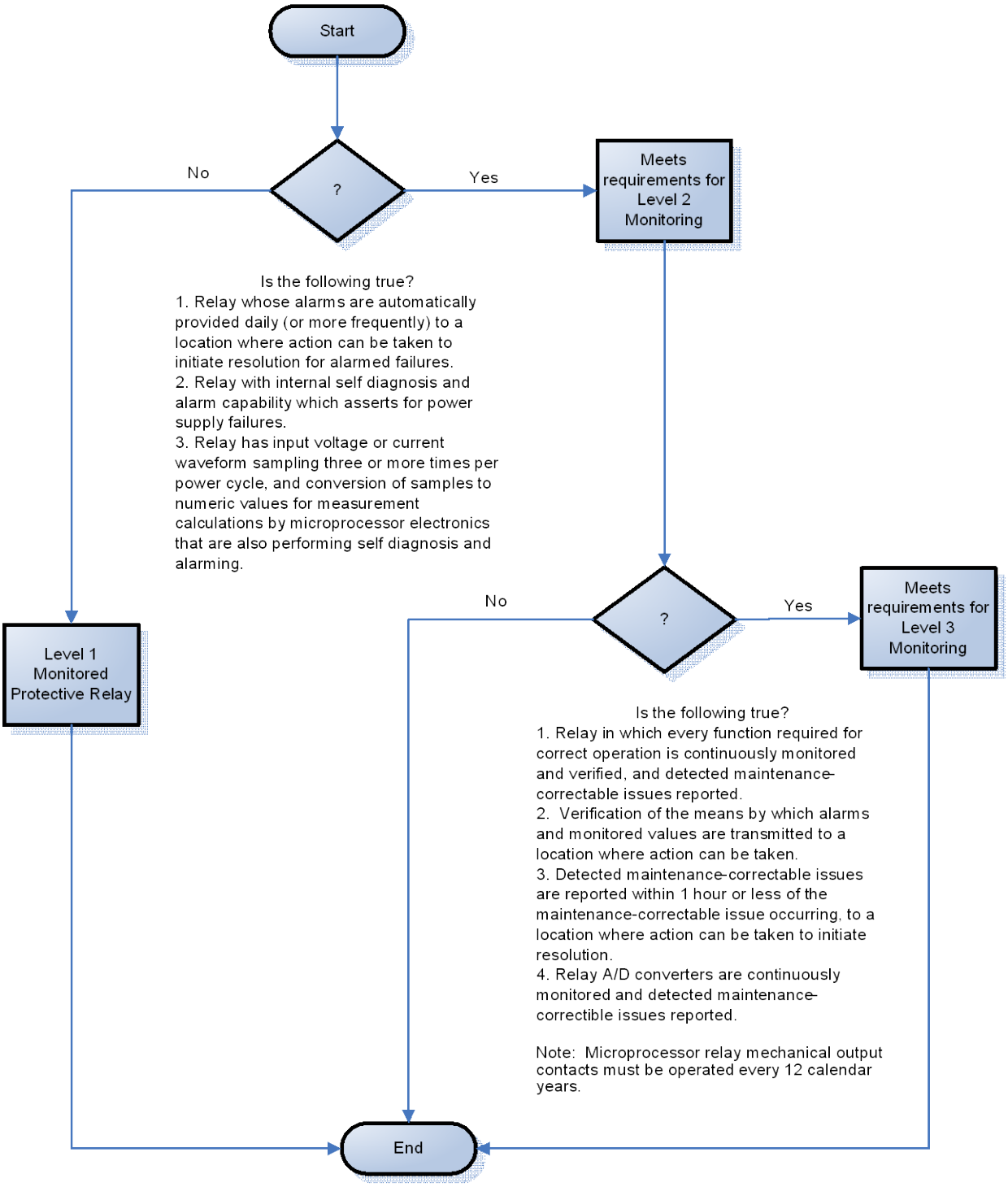

VOLTAGE AND CURRENT SENSING DEVICES

MONITOR LEVEL DECISION TREE

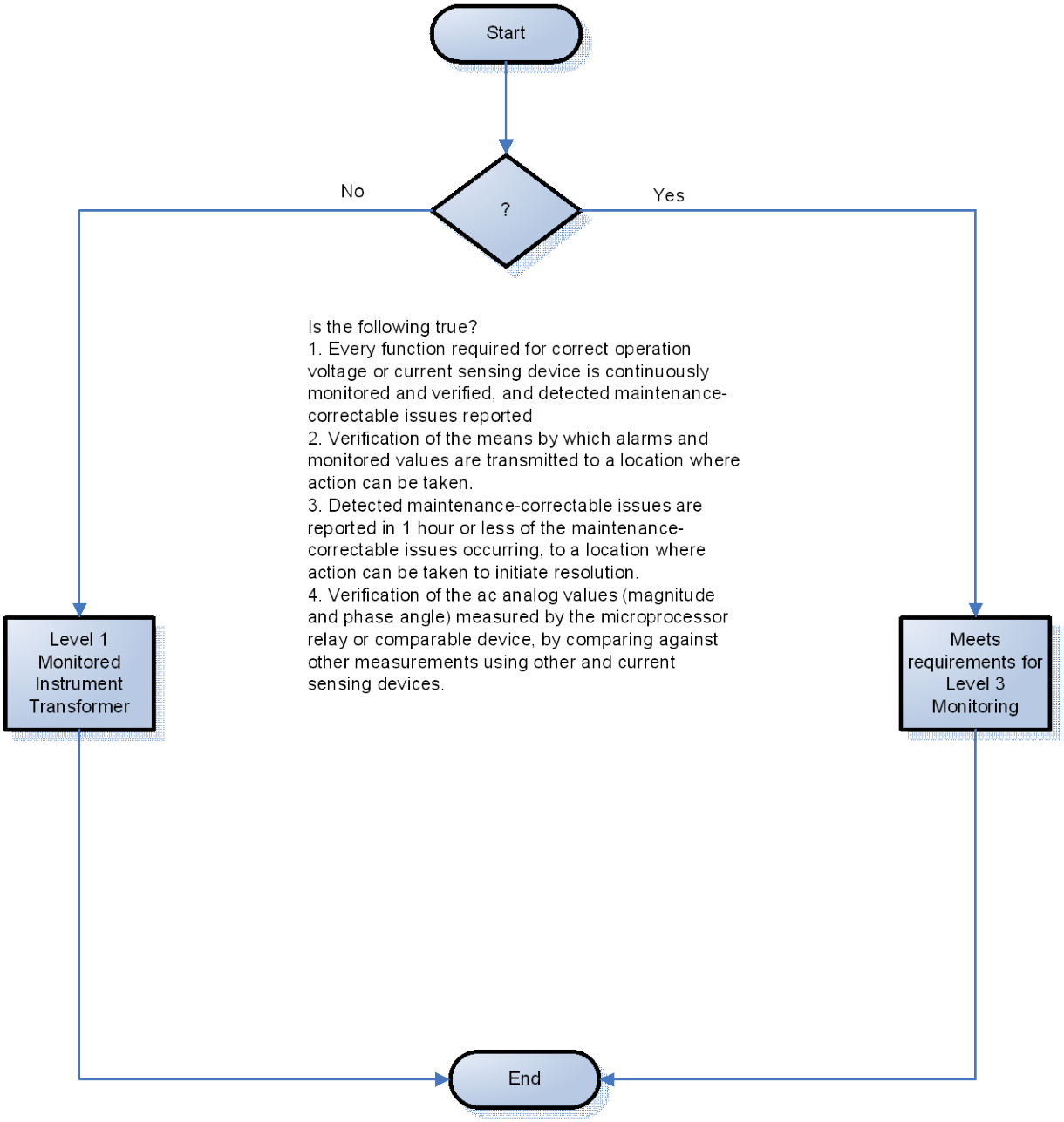

CONTROL CIRCUIT
MONITOR LEVEL
DECISION TREE

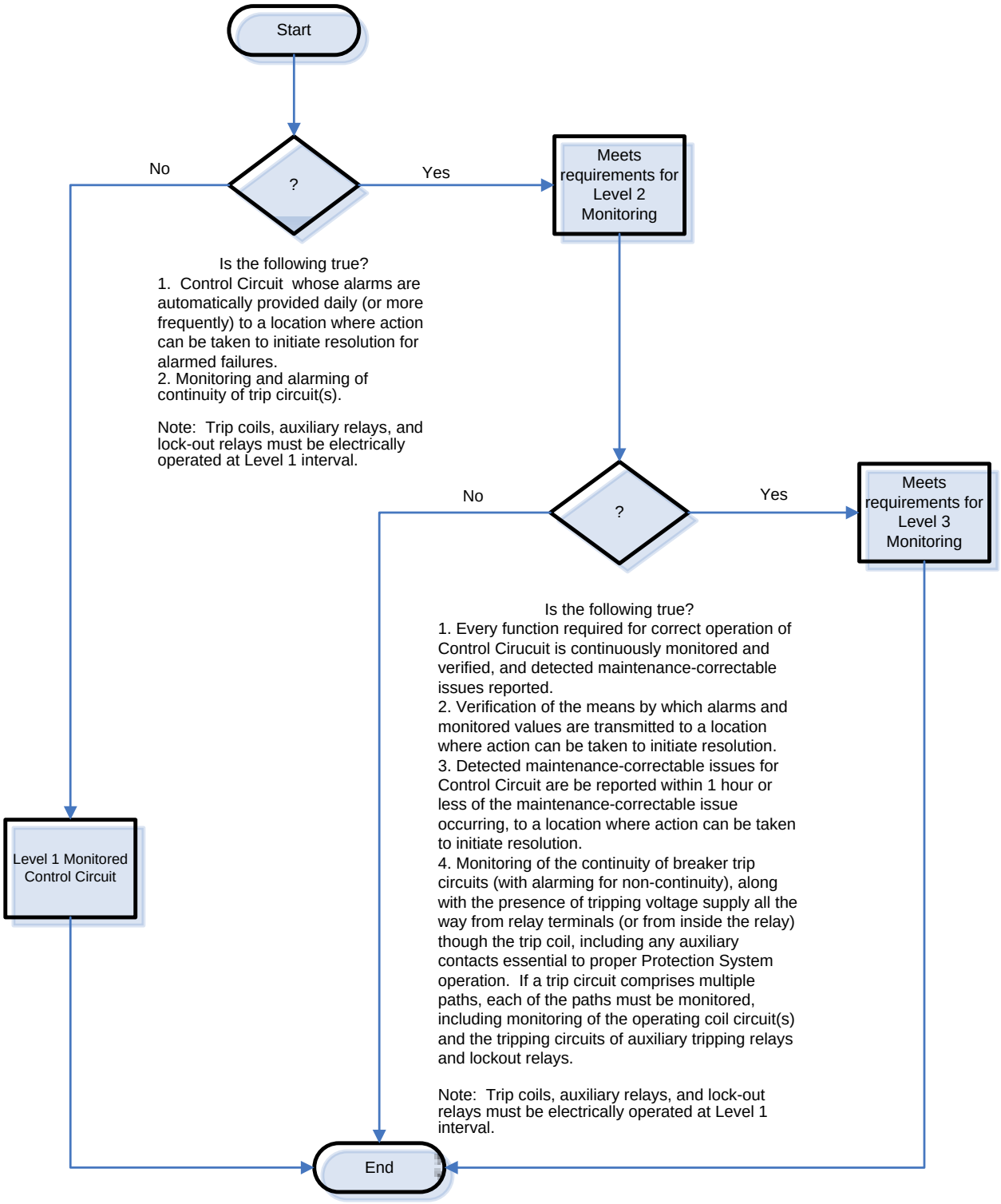

DC SUPPLY
MONITOR LEVEL
DECISION TREE

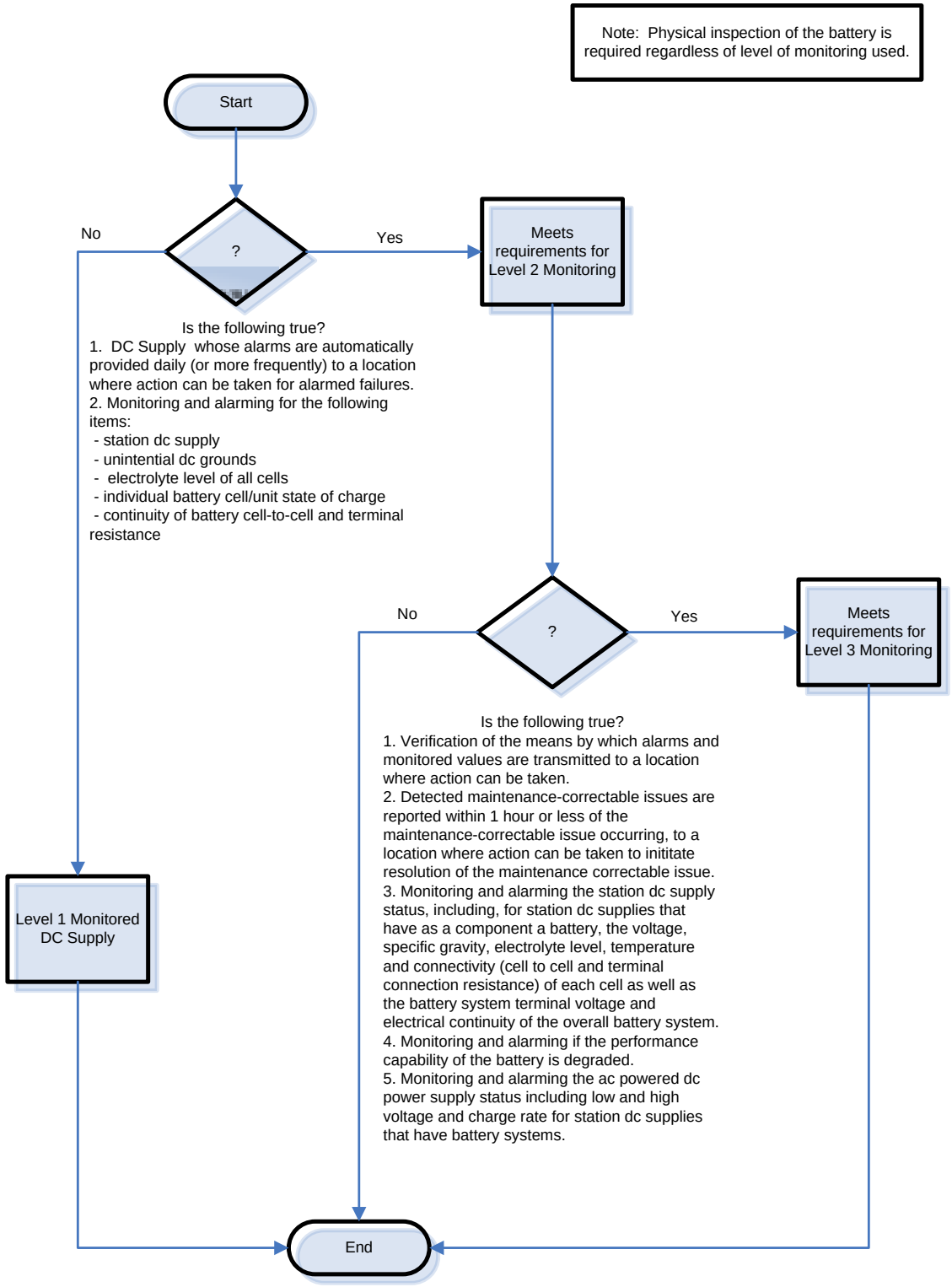

COMMUNICATION SYSTEM
MONITOR LEVEL
DECISION TREE

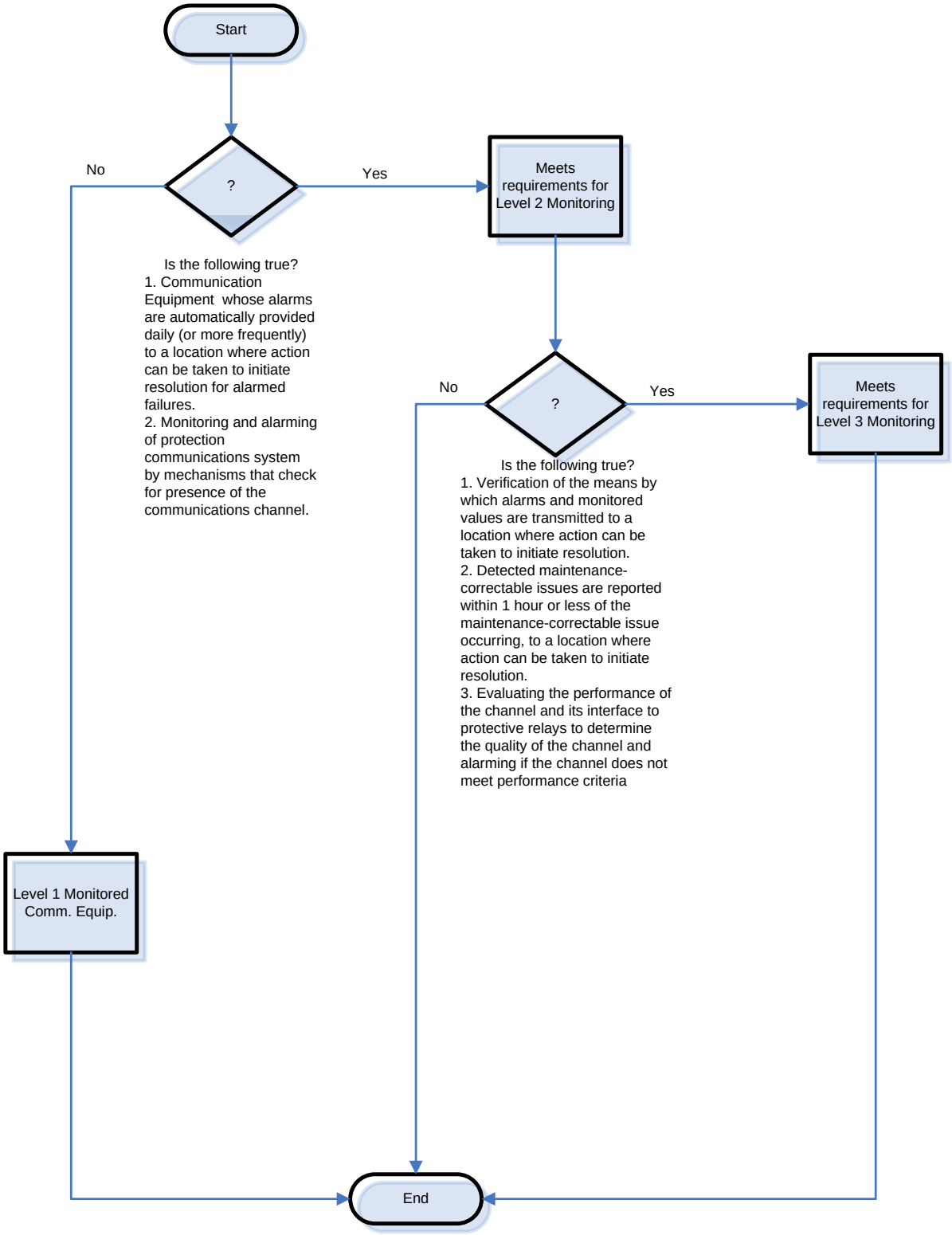

2. **Level 1 Monitored Protection Systems (Unmonitored Protection Systems)**

   A. **We have an electromechanical (unmonitored) relay that has a trip output to a lockout relay (unmonitored) which trips our transformer off-line by tripping the transformer's high-side and low-side circuit breakers. What testing must be done for this system?**

   This system is made up of components that are level 1 (unmonitored). Assuming a time-based protection system maintenance program schedule, each component must be maintained per Table 1a – Level 1 Monitoring Maximum Allowable Testing Intervals and Maintenance Activities.

3. **Level 2 Monitored Protection Systems (Partially Monitored Protection Systems)**

   A. **We have a 30 year old oil circuit breaker with a red indicating lamp on the substation relay panel that is illuminated only if there is continuity through the breaker trip coil. There is no SCADA monitor or relay monitor of this trip coil. The line protection relay package that trips this circuit breaker is a microprocessor relay that has an integral alarm relay that will assert on a number of conditions that includes a loss of power to the relay. This alarm contact connects to our SCADA system and alerts our 24-hour operations center of relay trouble when the alarm contact closes. This microprocessor relay trips the circuit breaker only and does not monitor trip coil continuity or other things such as trip current. Is this an unmonitored or a partially-monitored system? How often must I perform maintenance?**

   The protective relay is a level 2 (partially) monitored component of your protection system and can be maintained every 12 years or when a maintenance correctable issue arises. Assuming a time-based protection system maintenance program schedule, this component must be maintained per Table 1b – Level 2 Monitoring Maximum Allowable Testing Intervals and Maintenance Activities

   The rest of your protection system contains components that are level 1 (unmonitored) and must be maintained within at least the maximum verification intervals of Table 1a.

   B. **How do I verify the A/D converters of microprocessor-based relays?**

   There are a variety of ways to do this. Examples include using values gathered via data communications and automatically comparing these values with values from other sources, and using groupings of other measurements (such as vector summation of bus feeder currents) for comparison if calibration requirements assure acceptable measurement of power system input values. Other methods are possible.

   C. **For a level 2 monitored Protection System (Partially Monitored Protection System) pertaining to Protection System communications equipment and channels, how is the performance criteria involved in the maintenance program?**

   The entity determines the performance criteria for each installation, depending on the technology implemented. If the communication channel performance of a Protection System varies from the pre-determined performance criteria for that system, these results should be investigated and resolved.

D. My system has alarms that are gathered once daily through an auto-polling system; this is not really a conventional SCADA system but does it meet the Table 1b requirements for inclusion as Level 2?

Yes, provided the auto-polling that gathers the alarms reports those alarms to a location where the action can be initiated to correct the maintenance-correctable issue. This location does not have to be the location of the engineer or the technician that will eventually repair the problem, but rather a location where the action can be initiated.

4. Level 3 Monitored Protection Systems (Fully Monitored Protection Systems)

A. Why are there activities defined for a level-3 monitored Protection System? The technology does not seem to exist at this time to implement this monitoring level.

There may actually be some equipment available that is capable of meeting level-3 monitoring criteria, in which case it may be maintained according to Table 1c. However, even if there is no equipment available today that can meet this level of monitoring; the Standard establishes the necessary requirements for when such equipment becomes available. By creating a roadmap for development, this provision makes the Standard technology-neutral. The standard drafting team wants to avoid the need to revise the Standard in a few years to accommodate technology advances that are certainly coming to the industry.

Appendix A — Protection System Maintenance Standard Drafting Team

Charles W. Rogers
Chairman
Consumers Energy Co.

John B. Anderson
Xcel Energy

Merle E. Ashton
Tri-State G&T

Bob Bentert
Florida Power & Light Company

John Ciufo
Hydro One Inc

Sam Francis
Oncor

Carol A Gerou
Midwest Reliability Organization

William Shultz
Southern Company Generation

Russell C Hardison
Tennessee Valley Authority

David Harper
NRG Texas Maintenance Services

Mark Lukas
ComEd

Al McMeekin
NERC Staff
North American Electric Reliability Corporation

Mark Peterson
Great River Energy

William Shultz
Southern Company Generation

Leonard Swanson, Jr
National Grid USA

Eric A Udren
Quanta Technology

Philip B Winston
Georgia Power Company

John A Zipp
ITC Holdings

Index

3-month interval, 24

aggregate, 24, 25

alarm, 16, 17, 18, 29, 30, 38

automated monitoring and alarming, 24

auto-restoration, 5

auxiliary relay, 11

batteries, 12, 13, 14, 15, 26, 27, 31

battery, 10, 12, 13, 14, 15, 26, 27, 29, 30

broken, 7

capacity, 14, 15, 29, 30

channel performance, 18, 38

charger, 12, 13, 14

check-off, 15

closing circuits, 5

commission, 23

Communication Site Batteries, 15

communications, 7, 11, 16, 17, 18, 31, 38

communications channel, 16, 17

communications-assisted-trip, 11

component, 2, 5, 11, 14, 19, 22, 23, 25, 26, 29, 31, 32, 38

continuity, 12, 13, 14, 38

corrective, 2, 5, 26

countable events, 2, 25

current and voltage measurements, 9

data retention, 22

DC ground, 15

documentation, 6, 21, 23, 31, 32

documentation method, 15

electromechanical, 7, 10, 26, 38

electro-mechanical relays, 6

evidence, 6, 22

fiber optic I/O scheme, 17

firmware, 5, 25

frequency-shift, 16

fully monitored, 16, 21

guard, 16, 17

Level 1, 16, 17, 31, 32, 38

Level 2, 16, 17, 31, 32, 38

Level 3, 16, 17, 27, 31, 39

lockout relay, 11, 20, 38

maintenance correctable issue, 2, 38

maintenance plan, 6, 22, 24

maximum allowable interval, 24, 26

microprocessor, 5, 6, 7, 9, 10, 11, 13, 14, 26, 29, 30, 38

Misoperations, 2, 25

nickel-cadmium, 14, 15

ohmic, 14, 15, 29, 30

out-of-service, 7

partially monitored, 11, 16

PBM, 24, 25, 26, 27

performance-based maintenance, 25, 26

pilot wire, 16

PMU, 19

power-line carrier, 16

pressure relays, 11, 12

protective relays, 5, 6, 7, 8, 10, 12, 13, 16, 18, 20

reclosing relays, 5

Restoration, 5

sample list of devices, 20

segment, 2, 24, 25, 26, 27

settings, 2, 6, 7, 12, 22

SPS, 5, 19, 31

Table 1a, 2, 3, 5, 23, 32, 38

Table 1b, 5, 11, 17, 32, 38

Table 1c, 2, 5, 21, 39

TBM, 22

trip coil, 10, 11, 29, 30, 38

trip signal, 11, 17

trip test, 11

tripping circuits, 10

UFLS, 18, 19, 31

unintentional ground, 15

unmonitored, 16, 29, 30, 38

UVLS, 18, 19, 31

valve-regulated lead-acid, 15

vented lead-acid, 15, 29

voltage and current sensing devices, 2, 8, 10

VRLA, 14, 15

NERC
NORTH AMERICAN ELECTRIC RELIABILITY COUNCIL

NERC
NORTH AMERICAN ELECTRIC RELIABILITY CORPORATION

~~PRC-005-2 —~~NERC Protection System Maintenance Standard PRC-005-2

~~Frequently Asked Questions~~

FREQUENTLY ASKED QUESTIONS -

Practical Compliance and Implementation ~~(Draft 1)~~

April 16, 2010

Informative Annex to Standard PRC-005-2

Prepared by the

Protection System Maintenance and Testing Standard Drafting Team

to ensure the reliability of the bulk power system

116-390 Village Blvd., Princeton, NJ 08540
609.452.8060 | 609.452.9550 fax
www.nerc.com

NERC
NORTH AMERICAN ELECTRIC
RELIABILITY COUNCIL

NERC
NORTH AMERICAN ELECTRIC
RELIABILITY CORPORATION

~~July, 2009~~

to ensure
the reliability of the
bulk power system

116-390 Village Blvd., Princeton, NJ 08540
609.452.8060 | 609.452.9550 fax
www.nerc.com

Table of Contents

Introduction **2**

Executive Summary **2**

Terms Used in PRC-005-2 ..... **2**

Frequently Asked Questions **3**

I General FAQs: *3*

II Group by Type of Protection System Component: *5*

1. All Protection System Components *5*

2. Protective Relays *5*

3. Voltage and Current Sensing Device Inputs to Protective Relays *8*

4. Protection System Control Circuitry *10*

5. Station dc Supply *12*

6. Protection System Communications Equipment *16*

7. UVLS and UFLS Relays that Comprise a Protection System Distributed Over the Power System *18*

8. SPS or Relay Sensing for Centralized UFLS or UVLS *19*

III Group by Type of BES Facility: *20*

1. All BES Facilities *20*

2. Generation *20*

3. Transmission *21*

IV Group by Type of Maintenance Program: *22*

1. All Protection System Maintenance Programs *22*

2. Time-Based Protection System Maintenance (TBM) Programs *23*

3. Performance-Based Protection System Maintenance (PBM) Programs *25*

V Group by Monitoring Level: *29*

1. All Monitoring Levels *29*

2. Level 1 Monitored Protection Systems (Unmonitored Protection Systems) *41*

3. Level 2 Monitored Protection Systems (Partially Monitored Protection Systems) *41*

4. Level 3 Monitored Protection Systems (Fully Monitored Protection Systems) *42*

Appendix A — Protection System Maintenance Standard Drafting Team **43**

Index **44**

Introduction

The following is a draft collection of questions and answers that the PSMT SDT believes could be helpful to those implementing NERC Standard PRC-005-2 Protection System Maintenance. As the draft standard proceeds through development, this FAQ document will be revised, including responses to key or frequent comments from the posting process. The FAQ will be organized at a later time during the development of the draft Standard.

This FAQ document will support both the Standard and the associated Technical Reference document.

Executive Summary

- ~~To be added~~Write later if needed~~.~~

Terms Used in PRC-005-2

Maintenance Correctable Issue – As indicated in footnote 2 of the draft standard, a maintenance correctable issue is a failure of a device to operate within design parameters that can not be restored to functional order by repair or calibration~~, repair or replacement~~ while performing the initial on-site maintenance activity, and that requires follow-up corrective action.

Segment – As indicated in *PRC-005-2 Attachment A Criteria for a Performance-Based Protection System Maintenance Program*, a segment is a "A grouping of Protection Systems or ~~component devices~~components of a particular model or type from a single manufacturer, with other common factors such that consistent performance is expected across the entire population of the segment, and shall only be defined for a population of 60 or more individual components."

Component – This equipment is first mentioned in Requirement 1~~, Part 1~~.1 of this standard. A component is any individual discrete piece of equipment included in a Protection System, such as a protective relay or current sensing device. Types of components are listed in Table 1 ("Maximum Allowable Testing Intervals and Maintenance Activities for Unmonitored Protection Systems"). For components such as dc circuits, the designation of what constitutes a dc control circuit ~~element~~component is somewhat arbitrary and is very dependent upon how an entity performs and tracks the testing of the dc circuitry. Some entities test their dc circuits on a breaker basis whereas others test their circuitry on a local zone of protection basis. Thus, entities are allowed the latitude to designate their own definitions of "dc control circuit ~~elements~~components." Another example of where the entity has some discretion on determining what constitutes a single component is the voltage and current sensing devices~~,~~, where the entity may choose either to designate a full three-phase set of such devices or a single device as a single component.

Countable Event – As indicated in footnote 4 of *PRC-005-2 Attachment A, Criteria for a Performance-based Protection System Maintenance Program*, countable events include any failure of a component requiring repair or replacement, any condition discovered during the verification activities in Table 1a through Table 1c which requires corrective action, or a Misoperation attributed to hardware failure or calibration failure. Misoperations due to product design errors, software errors, relay settings different from specified settings, Protection System component configuration errors, or Protection System application errors are *not* included in Countable Events.

Frequently Asked Questions

I General FAQs:

1. The standard seems very complicated, and is difficult to understand. Can it be simplified?

Because the standard is establishing parameters for condition-based Maintenance (R2) and performance-based Maintenance (R3) in addition to simple time-based Maintenance, it does appear to be complicated. At its simplest, an entity needs to follow R1 and R4 and perform ONLY time-based maintenance according to Table 1a~~,~~. eliminating R2 and R3 from consideration altogether. If an entity then wishes to take advantage of monitoring on its Protection System components, R2 comes into play, along with Tables 1b and 1c. If an entity wishes to use historical performance of its Protection System components to perform performance-based Maintenance, R3 applies.

Please see the following diagram, which provides a "flow chart" of the standard.

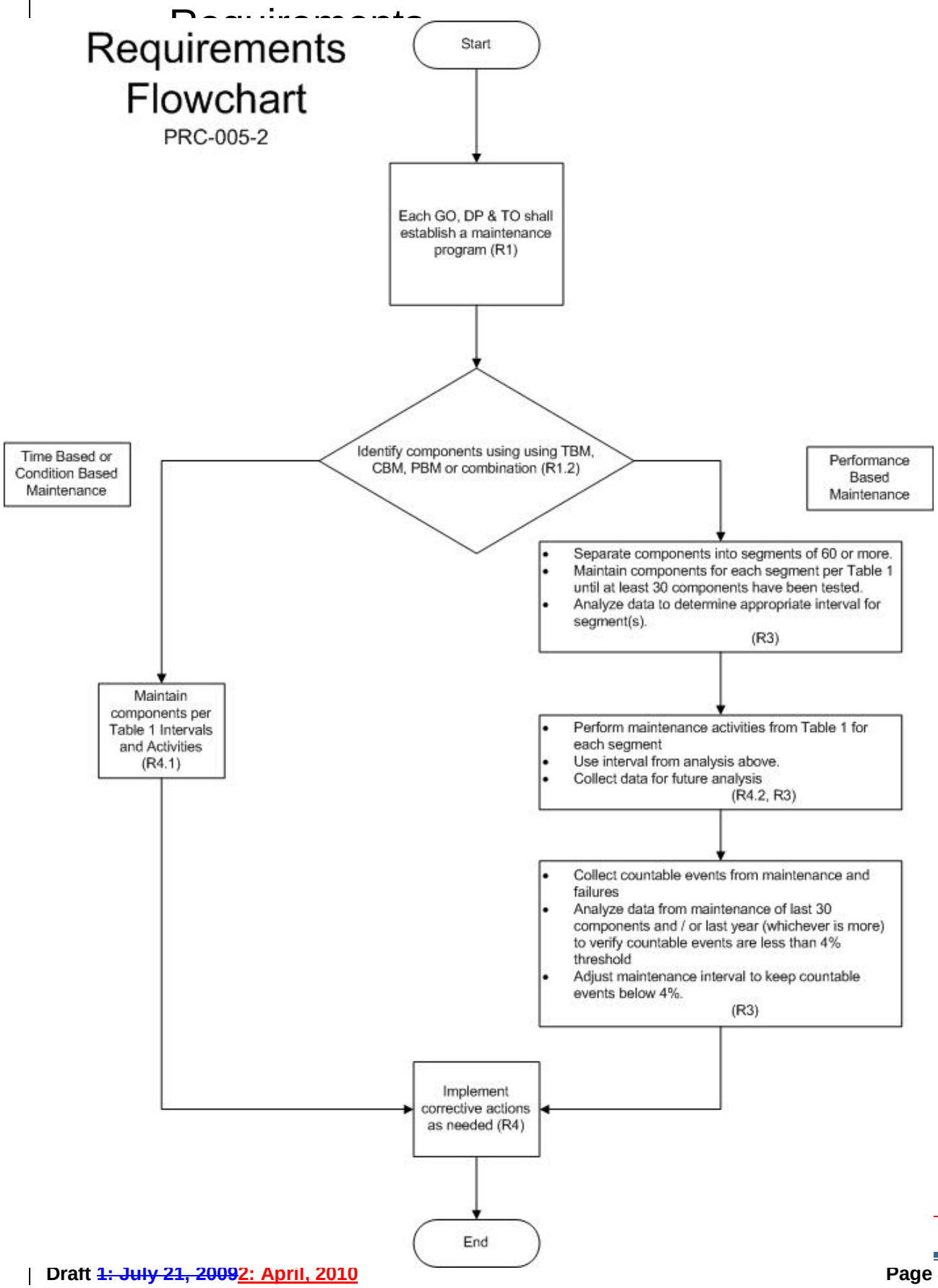
Requirements Flowchart
PRC-005-2
Start
Each GO, DP & TO shall establish a maintenance program (R1)
Identify components using using TBM, CBM, PBM or combination (R1.2)
Time Based or Condition Based Maintenance
Performance Based Maintenance
Separate components into segments of 60 or more.
Maintain components for each segment per Table 1 until at least 30 components have been tested.
Analyze data to determine appropriate interval for segment(s).
(R3)
Maintain components per Table 1 Intervals and Activities (R4.1)
Perform maintenance activities from Table 1 for each segment
Use interval from analysis above.
Collect data for future analysis
(R4.2, R3)
Collect countable events from maintenance and failures
Analyze data from maintenance of last 30 components and / or last year (whichever is more) to verify countable events are less than 4% threshold
Adjust maintenance interval to keep countable events below 4%.
(R3)
Implement corrective actions as needed (R4)
End

II Group by Type of Protection System Component:

1. All Protection System Components

A. Are power circuit reclosers, reclosing relays~~,~~, closing circuits and auto-restoration schemes covered in this standard?

No. As stated in R1, this standard covers protective relays that use measurements of voltage, current and/or phase angle to determine anomalies and to trip a portion of the BES. Reclosers, reclosing relays~~,~~, closing circuits and auto-restoration schemes are used to cause devices to close as opposed to electrical-measurement relays and their associated circuits that cause circuit interruption from the BES; such closing devices and schemes are more appropriately covered under other NERC Standards. There is one notable exception: if a Special Protection System incorporates automatic closing of breakers, the related closing devices are part of the SPS and must be tested accordingly.

B. Why does PRC-005-2 not specifically require maintenance and testing procedures as reflected in the previous standard, PRC-005-1?

PRC-005-1 does not require detailed maintenance and testing procedures, but instead requires summaries of such procedures, and is not clear on what is actually required. PRC-005-2 requires a documented Maintenance program, and is focused on establishing Requirements rather than prescribing methodology to meet those Requirements. Between the activities identified in Tables 1a, 1b, and 1c, and the various components of the definition established for a "Protection System Maintenance Program", PRC-005-2 establishes the activities and time-basis for a Protection System Maintenance Program to a level of detail not previously required.

2. Protective Relays

A. How do I approach testing when I have to upgrade firmware of a microprocessor relay?

The component "Upkeep" in the definition of a Protection System Maintenance Program, addresses "Routine activities necessary to assure that the component remains in good working order and implementation of any manufacturer's hardware and software service advisories which are relevant to the application of the device." The Maintenance Activities specified in Table 1a~~,~~, Table 1b~~,~~, and Table 1c do not present any requirements related to Upkeep for Protective Relays. However, the entity should assure that the relay continues to function properly after implementation of firmware changes.

B. Please clarify what is meant by restoration in the definition of maintenance.

The component "Restoration" in the definition of a Protection System Maintenance Program, addresses corrective activities necessary to assure that the component is returned to working order following the discovery of its failure or malfunction. The Maintenance Activities specified in Table 1a, Table 1b, and Table 1c do not present any requirements related to

Restoration; R4.3 of the standard does require that the entity "initiate any necessary activities to correct unresolved maintenance correctable issues". Some examples of restoration (or correction of maintenance-correctable issues) include, but are not limited to, replacement of capacitors in distance relays to bring them to working order; replacement of relays, or other Protection System components, to bring the Protection System to working order; upgrade of electro-mechanical or solid-state protective relays to micro-processor based relays following the discovery of failed components. Restoration, as used in this context is not to be confused with Restoration rules as used in system operations. Maintenance activity necessarily includes both the detection of problems and the repairs needed to eliminate those problems. This standard does not identify all of the Protection System problems that must be detected and eliminated, rather it is the intent of this standard that an entity determines the necessary working order for their various devices and keeps them in working order. If an equipment item is repaired or replaced then the entity can restart the maintenance-time-interval-clock if desired, however the replacement of equipment does not remove any documentation requirements that would have been required to verify compliance with time-interval requirements; in other words do not discard maintenance data that goes to verify your work

C. If I upgrade my old relays then do I have to maintain my previous equipment maintenance documentation?

If an equipment item is repaired or replaced then the entity can restart the maintenance-activity-time-interval-clock if desired, however the replacement of equipment does not remove any documentation requirements. The requirements in the standard are intended to ensure that an entity has a maintenance plan and that the entity adheres to minimum activities and maximum time intervals. The documentation requirements are intended to help an entity demonstrate compliance. For example, saving the dates and records of the last two maintenance cycles is intended to demonstrate compliance with the interval. Therefore, if you upgrade or replace equipment then you still must maintain the documentation for the previous equipment, thus demonstrating compliance with the time interval requirement prior to the replacement action.

D. What is meant by "Verify that settings are as specified" maintenance activity in tables 1a and 1b?

Verification of settings is an activity directed mostly towards microprocessor based relays.

For relay maintenance departments that choose to test microprocessor based relays in the same manner as electro-mechanical relays are tested, the testing process sometimes requires that some specific functions be disabled. Later tests might enable the functions previously disabled but perhaps still other functions or logic statements were then masked out. It is imperative that, when the relay is placed into service, the settings in the relay be the settings that were intended to be in that relay or as the Standard states "…settings are as specified."

Many of the microprocessor based relays available today have software tools which provide this functionality and generate reports for this purpose.

For evidence or documentation of this requirement a simple recorded acknowledgement that this was done is sufficient.

The drafting team was careful not to require "…that the relay settings be correct…" because it was believed that this might then place a burden of proof that the specified settings would result in the correct intended operation of the interrupting device. While that is a noble intention, the measurable proof of such a requirement is immense. The intent is simply to check that the settings in the relay match the settings specified to those placed into the relay.

E. Are electromechanical relays included in the "Verify that settings are as specified" maintenance activity in tables 1a and 1b?

Verification of settings is an activity directed towards the application of protection related functions of microprocessor based relays. Electromechanical relays require calibration verification by voltage and/or current injection, and thus the settings are verified during calibration activity. In the example of a time-overcurrent relay, a minor deviation in time dial, versus the settings, may be acceptable as long as the relay calibration is within accepted tolerances at the injected current amplitudes. A major deviation may require further investigation, as it could indicate a problem with the relay or an incorrect relay style for the application.

~~B.~~F. I use my protective relays only as sources of metered quantities and breaker status for SCADA and EMS through a substation distributed RTU or data concentrator to the control center. What are the maintenance requirements for the relays?

This standard addresses only devices "that are applied on, or are designed to provide protection for the BES." Protective relays, providing only the functions mentioned in the question, are not included.

~~C.~~G. I use my protective relays for fault and disturbance recording, collecting oscillographic records and event records via communications for fault analysis to meet NERC and DME requirements. What are the maintenance requirements for the relays?

For relays used only as disturbance monitoring equipment, the NERC standard PRC-018-1 R3 & R6 states the maintenance requirements, and is being addressed by a Standards activity that is revising PRC-002-1 and PRC-018-1. For protective relays "that are applied on, or are designed to provide protection for the BES," this standard applies, even if they also perform DME functions.

H. We have a number of installations where we have changed our Protection System components. Some of the changes were upgrades, but others were simply system rating changes that merely required taking relays "out-of-service". What are our responsibilities when it comes to "out-of-service" devices?

Assuming that your system uprates, upgrades and overall changes meet any and all other requirements and standards then the requirements of PRC-005-2 are simple – if the Protection system component performs a Protection system function then it must be maintained. If the component no longer performs Protection System functions than it does not require maintenance activities under the Tables of PRC-005-2. While many entities might physically remove a component that is no longer needed there is no requirement in PRC-005-2 to remove such component(s). Obviously, prudence would dictate that an "out-of-service" device is truly made inactive. There are no record requirements listed in PRC-005-2 for Protection System components not used.

I. While performing relay testing of a protective device on our Bulk Electric System it was discovered that the protective device being tested was either broken or out of calibration. Does this satisfy the relay testing requirement even though the protective device tested bad, and may be unable to be placed back into service?

Yes, PRC-005-2 requires entities to perform relay testing on protective devices on a given maintenance cycle interval. By performing this testing, the entity has satisfied PRC-005-2

requirement although the protective device may be unable to be returned to service under normal calibration adjustments. R4.3 states (the entity must):
The entity must assure either that the components are within acceptable parameters at the conclusion of the maintenance activities or initiate any necessary activities to correct unresolved maintenance correctable issues.

J. If I show the protective device out of service while it is being repaired then can I add it back as a new protective device when it returns? If not, my relay testing history would show that I was out of compliance for the last maintenance cycle.

The maintenance and testing requirements (R4.3) (in essence) state that the entity assure the components are within the owner's acceptable operating parameters, if not then actions must be initiated to correct the deviance. The type of corrective activity is not stated; however it could include repairs or replacements. Documentation is always a necessity ("*If it is not documented then it wasn't done!*")
Your documentation requirements will increase, of course, to demonstrate that your device tested bad and had corrective actions initiated. Your regional entity could very well ask for documentation showing status of your corrective actions.

K. What calibration tolerance should be applied on electromechanical relays?

Each entity establishes their own acceptable tolerances when applying protective relaying on their system. For some Protection System components, adjustment is required to bring measurement accuracy within the parameters established by the asset owner based on the specific application of the component. A calibration failure is the result if testing finds the specified parameters to be out of tolerance.

3. Voltage and Current Sensing Device Inputs to Protective Relays

A. What is meant by "…verify the current and voltage circuit inputs from the voltage and current sensing devices to the protective relays~~…"~~ …" Do we need to perform ratio, polarity and saturation tests every few years?

No. You must ~~prove~~verify that the protective relay is receiving the expected values from the voltage and current sensing devices (typically voltage and current transformers). This can be as difficult as is proposed by the question (with additional testing on the cabling and substation wiring to ensure that the values arrive at the relays); or simplicity can be achieved by other verification methods. ~~Some examples follow:~~While some examples follow, these are not intended to represent an all-inclusive list; technology advances and ingenuity should not be excluded from making comparisons and verifications:

- Compare the secondary values, at the relay, to a metering circuit, fed by different current transformers, monitoring the same line as the questioned relay circuit.

- Compare the individual phase secondary values at the relay panel (with additional testing on the panel wiring to ensure that the values arrive at those relays) with the other phases, and verify that residual currents are within expected bounds

- Observe all three phase currents and the residual current at the relay panel with an oscilloscope, observing comparable magnitudes and proper phase relationship, with additional testing on the panel wiring to ensure that the values arrive at the relays.

- Compare the values, as determined by the questioned relay~~,~~ (such as, but not limited to, a query to the microprocessor relay), to another protective relay monitoring the same line, with currents supplied by different ~~CTs.~~CT's.

- Compare the secondary values, at the relay with values measured by test instruments (such as, but not limited to multi-meters, voltmeter, clamp-on ammeters, etc) and verified by calculations and known ratios to be the values expected. For example a single PT on a 100KV bus will have a specific secondary value that when multiplied by the PT ratio arrives at the expected bus value of 100KV.

- Query SCADA for the power flows at the far end of the line protected by the questioned relay, compare those SCADA values to the values as determined by the questioned relay.

- Totalize the Watts and VARs on the bus and compare the totals to the values as seen by the questioned relay.

The point of the verification procedure is to ensure that all of the individual components are functioning properly; and that, an ongoing proactive procedure is in place to re-check the various components of the protective relay measuring systems.

B. The verification of phase current and voltage measurements by comparison to other quantities seems reasonable. How, though, can I verify residual or neutral currents, or 3V0 voltages, by comparison, when my system is closely balanced?

~~These values will be zero, or very small, for any reasonably balanced system. To verify these values by comparison, you will need to rely on the normal condition that your system is not perfectly balanced, and there will usually be a small zero-sequence current or voltage, and these values can be measured with instruments having a sufficiently low resolution range. A reading of precisely zero will probably suggest that there is an opening (or some other problem) in the measuring circuit. A finite value of a few percent of the phase quantities, however, may suggest that the measuring circuit is indeed performing properly.~~

Since these inputs are verified at commissioning, maintenance verification requires ensuring that phase quantities are as expected and that 3IO and 3VO quantities appear equal to or close to 0.

These quantities may be also verified by use of oscillographic records for connected microprocessor relays as recorded during system disturbances. Such records may compare to similar values recorded at other locations by other microprocessor relays for the same event, or compared to expected values (from short circuit studies) for known fault locations.

C. Is wiring insulation or hi-pot testing required by this Maintenance Standard?

No, wiring insulation and equipment hi-pot testing are not ~~required by the Maintenance Standard~~specifically required by the Maintenance Standard. However, if the method of verifying CT and PT inputs to the relay involves some other method than actual observation of

current and voltage transformer secondary inputs to the relay, it might be necessary to perform some sort of cable integrity test to verify that the instrument transformer secondary signals are actually making it to the relay and not being shunted off to ground. For instance, you could use CT excitation tests and PT turns ratio tests and compare to baseline values to verify that the instrument transformer outputs are acceptable. However, to conclude that these acceptable transformer instrument output signals are actually making it to the relay inputs, it also would be necessary to verify the insulation of the wiring between the instrument transformer and the relay.

D. My plant generator and transformer relays are electromechanical and do not have metering functions as do microprocessor based relays. In order for me to compare the instrument transformer inputs to these relays to the secondary values of other metered instrument transformers monitoring the same primary voltage and current signals, it would be necessary to temporarily connect test equipment like voltmeters and clamp on ammeters to measure the input signals to the relays. This practice seems very risky and a plant trip could result if the technician were to make an error while measuring these current and voltage signals. How can I avoid this risk? Also, what if no other instrument transformers are available which monitor the same primary voltage or current signal?

Comparing the input signals to the relays to the outputs of other independent instrument transformers monitoring the same primary current or voltage is just one method of verifying the instrument transformer inputs to the relays but is not required by the standard. Plants can choose how to best manage their risk. If online testing is deemed too risky, offline tests such as, but not limited to, CT excitation test and PT turns ratio tests can be compared to baseline data and be used in conjunction with CT and PT secondary wiring insulation verification tests to adequately "verify the current and voltage circuit inputs from the voltage and current sensing devices to the protective relays …" while eliminating the risk of tripping an in service generator or transformer. Similarly, this same offline test methodology can be used to verify the relay input voltage and current signals to relays when there are no other instrument transformers monitoring available for purposes of signal comparison.

4. Protection System Control Circuitry

A. Is it permissible to verify circuit breaker tripping at a different time (and interval) than when we verify the protective relays and the instrument transformers?

Yes, provided the entire Protective System is tested within the individual components' maximum allowable testing intervals.

B. The Protection System Maintenance Standard describes requirements for verifying the tripping of circuit breakers. What is this telling me about maintenance of circuit breakers?

Requirements in PRC-005-2 are intended to verify the integrity of tripping circuits~~,~~, including the breaker trip coil~~,~~, as well as the presence of auxiliary supply (usually a dc battery~~)~~) for energizing the trip coil if a protection function operates. Beyond this, PRC-005-2 sets no requirements for verifying circuit breaker performance, or for maintenance of the circuit breaker.

C. How do I test each dc Control Circuit path, as established for level 2 (partially monitored protection systems) monitoring of a "Protection System Control Circuitry (Trip coils and auxiliary relays)"?

Table 1b specifies that each breaker trip coil~~,~~, auxiliary relay~~,~~, and lockout relay must be operated within the specified time period. The required operations may be via targeted maintenance activities, or by documented operation of these devices for other purposes such as fault clearing.

D. What does this standard require for testing an Auxiliary Tripping Relay?

Table 1 requires that the trip test must verify that the auxiliary tripping relay ~~(94)~~ (s) and/or lockout relay ~~(86) operates~~(s) operate(s) electrically and that their trip output(s) perform as expected. Auxiliary outputs not in a trip path (i.e. alarming or DME input) are not required to be checked.

E. What does a functional trip test include?

An operational trip test must be performed on each portion of a trip circuit. Each control circuit path that produces a trip signal must be verified; this includes trip coils, auxiliary tripping relays ~~(94),~~, lockout relays ~~(86)~~, and communications~~-~~-assisted-trip schemes.

A trip test may be an overall test that verifies the operation of the entire trip scheme at once, or it may be several tests of the various portions that make up the entire trip ~~scheme~~path, provided that testing of the various portions of the trip scheme verifies all of the portions, including parallel paths, and overlaps those portions.

A circuit breaker or other interrupting device needs to be trip tested at least once per trip coil~~. Breaker auxiliary contacts that are essential for the proper operation of the protective relay trip circuit (or trip logic) must be verified as providing the correct breaker open/close status information to the Protection System.~~..

Discrete-component auxiliary relays ~~(94)~~ and lock-out relays ~~(86)~~ must be ~~proven~~verified by trip test~~.~~. The trip test must verify that the auxiliary or lock-out relay operates electrically and that the relay's trip output(s) change(s) state. Software latches or control algorithms, including trip logic processing implemented as programming component such as a microprocessor relay that take the place of (conventional) discrete component auxiliary relays or lock-out relays do not have to be routinely trip tested.

Normally-closed auxiliary contacts from other devices (for example, switchyard-voltage-level disconnect switches, interlock switches, or pressure switches) which are in the breaker trip path do not need to be tested.

F. Is a Sudden Pressure Relay an Auxiliary Tripping Relay?

No. IEEE C37.2-2008 assigns the device number 94 to auxiliary tripping relays. Sudden pressure relays are assigned device number 63, and is excluded from the Standard by footnote 1.

G. The standard specifically mentions Auxiliary and Lock-out relays; what is an Auxiliary Tripping Relay?

An auxiliary relay~~-~~, IEEE Device Number 94, is described in IEEE Standard C37.2-2008 as "A device that functions to trip a circuit breaker, contactor, or equipment; to permit immediate tripping by other devices; or to prevent immediate reclosing of a circuit interrupter if it should open automatically, even though its closing circuit is maintained closed."

H. What is a Lock-out Relay?

A lock-out relay, IEEE Device Number 86, is described in IEEE Standard C37.2 as "A device that trips and maintains the associated equipment or devices inoperative until it is reset by an operator, either locally or remotely."

I. My mechanical device does not operate electrically and does not have calibration settings~~,~~; what maintenance activities apply?

You must conduct a test(s) to verify the integrity of the trip circuit. This standard does not cover circuit breaker maintenance or transformer maintenance. The standard also does not cover testing of devices such as sudden pressure relays (63), temperature relays (49), and other relays which respond to mechanical parameters rather than electrical parameters.

5. Station dc Supply

A. What constitutes the station dc supply as mentioned in the definition of Protective System?

The station direct current (dc) supply normally consists of two components: the battery charger and the station battery itself. There are also emerging technologies that provide a source of dc supply that does not include either a battery or charger.

Battery Charger - The battery charger is supplied by an available ac source. At a minimum, the battery charger must be sized to charge the battery (after discharge) and supply the constant dc load. In many cases, it may be sized also to provide sufficient dc current to handle the higher energy requirements of tripping breakers and switches when actuated by the protective relays in the Protection System.

Station Battery - Station batteries provide the dc power required for tripping and for supplying normal dc power to the station in the event of loss of the battery charger. There are several technologies of battery that require unique forms of maintenance as established in Table 1.

Emerging Technologies - Station dc supplies are currently being developed that use other energy storage technologies beside the station battery to prevent loss of the station dc supply when ac power is lost. Maintenance of these station dc supplies will require different kinds of tests and inspections. Table 1 presents maintenance activities and maximum allowable testing intervals for these new station dc supply technologies. However, because these technologies are relatively new the maintenance activities for these station dc supplies may change over time.

B. In the Maintenance Activities for station dc supply in Table 1, what do you mean by "continuity~~"?~~"?

Because the Standard pertains to maintenance not only of the station battery~~-~~, but also the whole station dc supply, continuity checks of the station dc supply are required. "Continuity"

as used in Table 1 refers to verifying that there is a continuous current path from the positive terminal of the station battery set to the negative terminal, otherwise there is no way of determining that a station battery is available to supply dc current to the station.

The current path through a station battery from its positive to its negative connection to the dc control circuits is composed of two types of elements. These path elements are the electrochemical path through each of its cells and all of the internal and external metallic connections and terminations of the batteries in the battery set. If there is loss of continuity (an open circuit) in any part of the electrochemical or metallic path the battery set will not be available for service.

C. Why is it necessary to verify the continuity of the dc supply?

In the event of the loss of the ac source or battery charger~~,~~, the battery must be capable of supplying dc current, both for continuous dc loads and for tripping breakers and switches. Without continuity~~,~~, the battery cannot perform this function.

If the battery charger is not sized to handle the maximum dc current required to operate the protective systems, it is sized only to handle the constant dc load of the station and the charging current required to bring the battery back to full charge following a discharge. At those stations, the battery charger would not be able to trip breakers and switches if the battery experiences loss of continuity~~.~~.

At generating stations and large transmission stations where battery chargers are capable of handling the maximum current required by the Protection System, there are still problems that could potentially occur when the continuity through the connected battery is interrupted.

- ◊ Many battery chargers produce harmonics which can cause failure of dc power supplies in microprocessor based protective relays and other electronic devices connected to station dc supply. In these cases, the substation battery serves as a filter for these harmonics. With the loss of continuity in the battery, the filter provided by the battery is no longer present.
- ◊ Loss of electrical continuity of the station battery will cause, regardless of the battery ~~charger's~~charger's output current capability, a delayed response in full output current from the charger. Almost all chargers have an intentional 1 to 2 second delay to switch from a low substation dc load current to the maximum output of the charger. This delay would cause the opening of circuit breakers to be delayed which could violate system performance standards.

D. How do you verify continuity of the dc supply?

Monitoring of the station dc supply voltage will not indicate that there is a problem with the dc current path through the battery unless the battery charger is taken out of service. At that time a break in the continuity of the station battery current path will be revealed because there will be no voltage on the substation dc circuitry.

Although the Standard prescribes what must be done during the maintenance activity it does not prescribe how the maintenance activity should be accomplished. There are several methods that can be used to verify the electrical continuity of the battery~~.~~.

- ◊ One method is to measure that there is current flowing through the battery itself by a simple clamp on milliamp-range ammeter. A battery is always either charging or

discharging. Even when a battery is charged there is still a measurable float charge current that can be detected to verify that there is continuity in the electrical path through the battery.

- ◊ A simple test for continuity is to remove the battery charger from service and verify that the battery provides voltage and current to the dc system. However, the behavior of the various dc-supplied equipment in the station should be considered before using this approach.
- ◊ Manufacturers of microprocessor based battery chargers have developed methods for their equipment to periodically (or continuously) ~~tested~~test for battery continuity~~.~~. For example, one manufacturer periodically reduces the float voltage on the battery until current from the battery to the dc load can be measured to confirm continuity.

No matter how the electrical continuity of a battery set is verified it is a necessary maintenance activity that must be performed at the intervals prescribed by Table 1 to insure that the station dc supply will provide the required current to the Protection System at all times.

~~E.Why is specific gravity testing required?~~

~~Specific gravity testing measures the state of the charge for each individual cell, and is performed to determine the condition of the charging system as well as the condition of the individual cell.~~

~~Specific gravity measurements can also be used as an indication of loss of continuity over a period of time. Specific gravity measurement is a method of determining the state of charge of a battery. Loss of continuity in the battery circuit will not allow charging current to flow through the battery and the battery cells will eventually self discharge causing the specific gravity to approach the specific gravity value of water which is 1.0.~~

~~If the specific gravity measurements taken during an inspection are determined to be low, this indicates that the battery is in a state of discharge. If no recent high discharges of the battery have occurred and the float voltage is normal, then the continuity of the battery circuit can be suspected and other tests such as measuring battery current should be made to determine if the specific gravity readings are an indication of loss of battery continuity.~~

~~F.~~E. When should I check the station batteries to see if they have sufficient energy to perform as designed?

The answer to this question depends on the type of battery (valve regulated lead-acid, vented lead acid, or nickel-cadmium~~),~~), the maintenance activity chosen, and the type of time based monitoring level selected.

For example, if you have a Valve Regulated Lead-Acid (VRLA~~)~~) station battery~~,~~, and you have chosen to evaluate the measured cell/unit internal ohmic values to the battery cell's baseline, you will have to perform verification at a maximum maintenance interval of no greater than every three months.

If, for a VRLA station battery~~,~~, you choose to conduct a performance capacity test on the entire station battery as the maintenance activity, then you will have to perform verification at a maximum maintenance interval of no greater than every 3 calendar years.

~~G.~~F. Why in Table 1 are there two Maintenance Activities with different Maximum Maintenance Intervals listed to verify that the station battery can perform as designed?

The two acceptable methods for proving that a station battery can perform as designed are based on two different philosophies. The first activity requires a ~~capacitive~~capacity discharge test of the entire battery set to ~~prove~~verify that degradation of one or several components (cells) in the set has not deteriorated to a point where the total capacity of the battery system falls below its designed rating. The second maintenance activity requires tests and evaluation of the internal ohmic measurements on each of the individual cells/units of the battery set to determine that each component can perform as designed and therefore the entire battery set can be ~~proven~~verified to perform as designed.

The maximum maintenance interval for discharge capacity testing is longer than the interval for testing and evaluation of internal ohmic cell measurements. An individual component of a battery set may degrade to an unacceptable level without causing the total battery set to fall below its designed rating under capacity testing. However, since the philosophy behind internal ohmic measurement evaluation is based on the fact that each battery component must be ~~proven~~verified to be ~~able~~ to perform as designed, the interval for verification by this maintenance activity must be shorter to catch individual cell/unit degradation.

~~H.~~G. What is the justification for having two different Maintenance Activities listed in Table 1 to verify that the station battery can perform as designed?

IEEE Standards 450, 1188, and 1106 for vented lead-acid~~,~~, valve-regulated lead-acid (VRLA~~),~~), and nickel-cadmium batteries~~,~~, respectively (which together are the most commonly used substation batteries on the BES) go into great detail about capacity testing of the entire battery set to determine that a battery can perform as designed.

The first maintenance activity listed in Table 1 for verifying that a station battery can perform as designed uses maximum maintenance intervals for capacity testing that were designed to align with the IEEE battery standards. This maintenance activity is applicable for vented lead-acid~~,~~, valve-regulated lead-acid~~,~~, and nickel-cadmium batteries~~.~~.

The second maintenance activity listed in Table 1 for verifying that a station battery can perform as designed uses maximum maintenance intervals for evaluating internal ohmic measurements in relation to their baseline measurements that are based on industry experience, EPRI technical reports and application guides, and the IEEE battery standards. By evaluating the internal ohmic measurements for each cell and comparing that measurement to the cell's baseline ohmic measurement (taken at the time of the battery set's acceptance capacity test), low-capacity cells can be identified and eliminated to keep the battery set capable of performing as designed. This maintenance activity is applicable only for vented lead-acid and VRLA batteries~~.~~.

~~I.~~H. Why in Table 1 of PRC-005-2 is there a maintenance activity to inspect the structural intergrity of the battery rack?

The three IEEE standards (1188, 450, and 1106) for VRLA~~,~~, vented lead-acid~~,~~, and nickel-cadmium batteries all recommend that as part of any battery inspection the battery rack should be inspected. The purpose of this inspection is to ~~prove~~verify that the battery rack is correctly installed and has no deterioration that could weaken its structural integrity. Because the battery rack is specifically designed for the battery that is mounted on it, weakening of its structural members by rust or corrosion can physically jeopardize the battery.

I. What is required to comply with the "Unintentional Grounds" requirement?

In most cases, the first ground that appears on a battery pole is not a problem. It is the unintentional ground that appears on the opposite pole that becomes problematic. Even then many systems are designed to operate favorably under some unintentional DC ground situations. It is up to the owner of the Protection System to determine if corrective actions are needed on unintentional DC grounds. The standard merely requires that a check be made for the existence of Unintentional DC Grounds. Obviously a "check-off" of some sort will have to be devised to demonstrate that a check is routinely done for Unintentional DC Grounds.

J. Where the standard refers to "all cells" is it sufficient to have a documentation method that refers to "all cells" or do we need to have separate documentation for every cell? For example to I need 60 individual documented check-offs for good electrolyte level or would a single check-off per bank be sufficient??

A single check-off per battery bank is sufficient.

K. Does this standard refer to Station batteries or all batteries, for example Communication Site Batteries?

This standard refers to Station Batteries. The drafting team does not believe that the scope of this standard refers to communication sites. The batteries covered under PRC-005-2 are the batteries that supply the trip current to the trip coils of the interrupting devices that are a part of the Protection System.

6. Protection System Communications Equipment

A. What are some examples of mechanisms to check communications equipment functioning?

For Level 1 unmonitored Protection Systems, various types of communications systems will have different facilities for on-site integrity checking to be performed at least every three months during a substation visit. Some examples are:

- ◊ On-off power-line carrier systems can be checked by performing a manual carrier keying test between the line terminals, or carrier checkback test from one terminal.
- ◊ Systems which use frequency-shift communications with a continuous guard signal (over a telephone circuit, analog microwave system, etc.) can be checked by observing a loss-of-guard indication or alarm~~.~~. For frequency-shift power line power-line carrier systems, the guard signal level meter can also be checked.
- ◊ Hard-wired pilot wire line Protection Systems typically have pilot-wire monitoring relays that give an alarm indication for a pilot wire ground or open pilot wire circuit loop.
- ◊ Digital communications systems have some sort of data reception indicator or data error indicator (based on loss of signal, bit error rate, or frame error checking).

For Level 2 partially monitored Protection Systems, various types of communications systems will have different facilities for monitoring the presence of the communications channel~~,~~, and activating alarms that can be monitored remotely. Some examples are:

- ◊ On-off power-line carrier systems can be shown to be operational by automated periodic power-line carrier checkback tests, with remote alarming of failures.

- ◊ Systems which use a frequency-shift communications with a continuous guard signal (over a telephone circuit, analog microwave system, etc.) can be remotely monitored with a loss-of-guard alarm or low signal level alarm.
- ◊ Hard-wired pilot wire line Protection Systems can be monitored by remote alarming of pilot-wire monitoring relays.
- ◊ Digital communications systems can activate remotely monitored alarms for data reception loss or data error indications.

For Level 3 fully monitored Protection Systems, the communications system must monitor all aspects of the performance and quality of the channel that show it meets the design performance criteria, including monitoring of the channel interface to protective relays~~.~~.

- ◊ In many communications systems signal quality measurements including signal-to-noise ratio, received signal level, reflected transmitter power or standing wave ratio, propagation delay, and data error rates are compared to alarm limits. These alarms are connected for remote monitoring.
- ◊ Alarms for inadequate performance are remotely monitored at all times, and the alarm communications system to the remote monitoring site must itself be continuously monitored to assure that the actual alarm status at the communications equipment location is continuously being reflected at the remote monitoring site.

B. What is needed for the 3-month inspection of communication-assisted trip scheme equipment?

The 3-month inspection applies to Level 1 (Unmonitored) equipment. An example of compliance with this requirement might be, but is not limited to:

With each site visit, check that the equipment is free from alarms, check any metered signal levels, and that power is still applied. While this might be explicit for a particular type of equipment (ie FSK equipment), the concept should be that the entity verify that the communications equipment that is used in a Protection System is operable through a cursory inspection and site visit. This site visit can be eliminated on this particular example if the FSK equipment had a monitored alarm on Loss of Guard.

C. Does a fiber optic I/O scheme used for breaker tripping or control within a station, for example - transmitting a trip signal or control logic between the control house and the breaker control cabinet, constitute a communication system?

This equipment is presently classified as being part of the Protection System Control Circuitry and tested per the portions of Table 1 applicable to Protection System Control Circuitry rather than those portions of the table applicable to communication equipment.

D. In Table 1b~~,~~, the Maintenance Activities section of the Protective System Communications Equipment and Channels refers to the quality of the channel meeting "performance criteria". What is meant by performance criteria?

Protection System communications channels must have a means of determining if the channel and communications equipment is operating normally. If the channel is not operating normally an alarm will be indicated. For Level 1 systems this alarm will probably be on the panel. For Level 2 and Level 3 systems, the alarm will be transmitted to a remote location.

Each entity will have established a nominal performance level for each protective system communications channel that is consistent with proper functioning of the Protection System. If that level of nominal performance is not being met, the system will go into alarm~~.~~. Following are some examples of protective system communications channel performance criteria:

- ◊ For direct transfer trip using a frequency shift power line carrier channel, a guard level monitor is part of the equipment. A normal receive level is established when the system is calibrated and if the signal level drops below an established level, the system will indicate an alarm~~.~~.
- ◊ An on-off blocking signal over power line carrier is used for directional comparison blocking schemes on transmission lines. During a fault, block logic is sent to the remote relays by turning on a local transmitter and sending the signal over the power line to a receiver at the remote end. This signal is normally off so continuous levels cannot be checked. These schemes use checkback testing to determine channel performance~~.~~. A predetermined signal sequence is sent to the remote end and the remote end decodes this signal and sends a signal sequence back. If the sending end receives the correct information from the remote terminal, the test passes and no alarm is indicated. Full power and reduced power tests are typically run. Power levels for these tests are determined at the time of calibration.
- ◊ Pilot wire relay systems use a hardwire communications circuit to communicate between the local and remote ends of the protective zone. This circuit is monitored by circulating a dc current between the relay systems. A typical level may be 1 mA. If the level drops below the setting of the alarm monitor, the system will indicate an alarm.
- ◊ Modern digital relay systems use data communications to transmit relay information to the remote end relays. An example of this is a line current differential scheme commonly used on transmission lines. The protective relays communicate current magnitude and phase information over the communications path to determine if the fault is located in the protective zone. Quantities such as digital packet loss, bit error rate and channel delay are monitored to determine the quality of the channel. These limits are determined and set during relay commissioning. Once set, any channel quality problems that fall outside the set levels will indicate an alarm~~.~~.

The previous examples show how some protective relay communications channels can be monitored and how the channel performance can be compared to performance criteria established by the entity. This standard does not state what the performance criteria will be - it just requires that the entity establish nominal criteria so protective system channel monitoring can be performed.

7. UVLS and UFLS Relays that Comprise a Protection System Distributed Over the Power System

A. We have an Under Voltage Load Shedding (UVLS~~)~~) system in place that prevents one of our distribution substations from supplying extremely low voltage in the case of a specific transmission line outage. The transmission line is part of the BES. Does this mean that our UVLS system falls within this standard?

The situation as stated indicates that the tripping action was intended to prevent low distribution voltage for a transmission system that was intact except for the line that was out of service.

This Standard is not applicable to this UVLS~~.~~.

~~UVLS installed to prevent system voltage collapse or voltage instability for BES reliability is covered by this standard.~~

B. We have a UFLS scheme that sheds the necessary load through distribution-side circuit breakers and circuit reclosers. Do the trip-test requirements for circuit breakers apply to our situation?

No. Distributed tripping schemes would have to exhibit multiple failures to trip before they would prove to be significant as opposed to a single failure to trip of, for example, a Transmission Protection System Bus Differential Lock-Out Relay. While many failures of these distribution breakers could add up to be significant, it is also believed that distribution breakers are operated often on just fault clearing duty and therefore the distribution circuit breakers are operated at least as frequently as any requirements that might have appeared in this standard.

C. What does "distributed over the power system" mean?

This refers to the common practice of applying UFLS on the distribution system, with each UFLS individually tripping a relatively low value of load. Therefore, the program is implemented via a large number of individual UFLS components performing independently, and the failure of any individual component to perform properly will have a minimal impact on the effectiveness of the overall UFLS program. Some UVLS systems are applied similarly.

8. SPS or Relay Sensing for Centralized UFLS or UVLS

A. Do I have to perform a full end-to-end test of a Special Protection System?

No. All portions of the SPS need to be maintained, and the portions must overlap, but the overall SPS does not need to have a single end-to-end test.

B. What about SPS interfaces between different entities or owners?

All SPS owners should have maintenance agreements that state which owner will perform specific tasks. SPS segments can be tested individually, but must overlap.

C. What do I have to do if I am using a phasor measurement unit (PMU~~)~~) as part of a Protection System or Special Protection System?

Any Phasor Measurement Unit (PMU~~)~~) function whose output is used in a protection system or Special Protection System (as opposed to a monitoring task) must be verified as a component in a Protection System.

D. How do I maintain a Special Protection System or Relay Sensing for Centralized UFLS or UVLS Systems?

Components of the SPS~~,~~, UFLS~~,~~, or UVLS should be maintained like similar components used for other Protection System functions.

The output action verification may be breaker tripping, or other control action that must be verified, but may be verified in overlapping segments. A grouped output control action need be verified only once within the specified time interval, but all of the SPS~~,~~, UFLS~~,~~, or UVLS components whose operation leads to that control action must each be verified.

E. What does "centralized" mean?

This refers to the practice of applying sensing units at many locations over the system, with all these components providing intelligence to an analytical system which then directs action to address a detected condition. In some cases, this action may not take place at the same location as the sensing units. This approach is often applied for complex SPS, and may be used for UVLS where necessary to address the conditions of concern.

III Group by Type of BES Facility:

1. All BES Facilities

A. What, exactly, is the BES, or Bulk Electric System?

BES is the abbreviation for Bulk Electric System. BES is a term in the Glossary of Terms Used in Reliability Standards, and is not being modified within this draft Standard.

NERC's approved definition of Bulk Electric System is:

> As defined by the Regional Reliability Organization, the electrical generation resources, transmission lines, interconnections with neighboring systems, and associated equipment, generally operated at voltages of 100 kV or higher. Radial transmission facilities serving only load with one transmission source are generally not included in this definition.

Each Regional Entity implements a definition of the Bulk Electric System that is based on this NERC definition, in some cases, supplemented by additional criteria. These regional definitions have been documented and provided to FERC as part of a ~~*June 16, 2007 Informational Filing*~~*June 16, 2007 Informational Filing*.

2. Generation

A. Please provide a sample list of devices or systems that must be verified in a generator, generator step-up transformer, and generator connected station auxiliary transformer to meet the requirements of this Maintenance Standard.

Examples of typical devices and systems that may directly trip the generator, or trip through a lockout relay may include but are not necessarily limited to:

- Fault protective functions, including distance functions, voltage-restrained overcurrent functions, or voltage-controlled overcurrent functions
- Loss-of-field relays
- Volts-per-hertz relays
- Negative sequence overcurrent relays
- Over voltage and under voltage protection relays

- Stator-ground relays
- Communications-based protection systems such as transfer-trip systems
- Generator differential relays
- Reverse power relays
- Frequency relays
- Out-of-step relays
- Inadvertent energization protection
- Breaker failure protection

For generator step up or generator-connected station auxiliary transformers, operation of any the following associated protective relays frequently would result in a trip of the generating unit and, as such, would be included in the program:

- Transformer differential relays
- Neutral overcurrent relay
- Phase overcurrent relays

A loss of a system-connected station auxiliary transformer could result in a loss of the generating plant if the plant was being provided with auxiliary power from that source~~.~~, and this auxiliary transformer may directly affect the ability to start up the plant and to connect the plant to the system. Thus, operation of any of the following relays associated with system-connected station auxiliary transformers would be included in the program:

- Transformer differential relays
- Neutral overcurrent relay
- Phase overcurrent relays

Relays which trip breakers serving station auxiliary loads such as pumps, fans, or fuel handling equipment, etc., need not be included in the program even if the loss of the those loads could result in a trip of the generating unit. Furthermore, relays which provide protection to secondary unit substation (SUS) or low switchgear transformers and relays protecting other downstream plant electrical distribution system components are not included in the scope of this program even if a trip of these devices might eventually result in a trip of the generating unit.

3. Transmission

A. Why is Distribution Provider included within the Applicable Entities and as a responsible entity within several of the requirements? Wouldn't anyone having relevant facilities be a Transmission Owner?

Depending on the station configuration of a particular substation, there may be Protection System equipment installed at a non-transmission voltage level (Distribution Provider equipment) that is wholly or partially installed to protect the BES. PRC-005-2 would apply to this equipment. An example is underfrequency load-shedding, which is frequently applied well down into the distribution system to meet PRC-007-0.

IV Group by Type of Maintenance Program:

1. All Protection System Maintenance Programs

A. I can't figure out how to demonstrate compliance with the requirements for level 3 (fully monitored~~)~~) Protection Systems. Why does this Maintenance Standard describe a maintenance program approach I cannot achieve?

Demonstrating compliance with the requirements for level 3 (fully monitored~~)~~) Protection Systems is likely to be very involved, and may include detailed manufacturer documentation of complete internal monitoring within a device, comprehensive design drawing reviews, and other detailed documentation. This Standard does not presume to specify what documentation must be developed; only that it must be comprehensive.

There may actually be some equipment available that is capable of meeting level-3 monitoring criteria, in which case it may be maintained according to Table 1c~~.~~. However, even if there is no equipment available today that can meet this level of monitoring, the Standard establishes the necessary requirements for when such equipment becomes available.

By creating a roadmap for development, this provision makes the Standard technology-neutral. The standard drafting team wants to avoid the need to revise the Standard in a few years to accommodate technology advances that are certainly coming to the industry.

B. What forms of evidence are acceptable?

Acceptable forms of evidence~~,~~, as relevant for the Requirement being documented, include but are not limited to:

- Process documents or plans
- Data (such as relay settings sheets, photos, SCADA, and test records)
- Database screen shots that demonstrate compliance information
- Diagrams, engineering prints, schematics, maintenance and testing records, etc.
- Logs (operator, substation, and other types of log)
- Inspection forms
- U.S. or Canadian mail, memos, or email proving the required information was exchanged, coordinated, submitted or received
- Database lists and records
- Check-off forms (paper or electronic)
- Any record that demonstrates that the maintenance activity was known and accounted for.

C. If I replace a failed Protection System component with another component, what testing do I need to perform on the new component?

The replacement component must be tested to a degree that assures that it will perform as intended. If it is desired to reset the Table 1 maintenance interval for the replacement component, all relevant Table 1 activities for the component should be performed.

D. Please use a specific example to demonstrate the data retention requirements.

The data retention requirements are intended to allow the availability of maintenance records to demonstrate that the time intervals in your maintenance plan were upheld. For example: "Company A" has a maintenance plan that requires its electro-mechanical protective relays be

tested, for routine scheduled tests, every 3 calendar years with a maximum allowed grace period of an additional 18 months. This entity would be required to maintain its records of maintenance of its last two routine scheduled tests. Thus its test records would have a latest routine test as well as its previous routine test. The interval between tests is therefore provable to an auditor as being within "Company A's" stated maximum time interval of 4.5 years.

The intent is not to have three test results proving two time intervals, but rather have two test results proving the last interval. The drafting team contends that this minimizes storage requirements while still having minimum data available to demonstrate compliance with time intervals.

If an entity prefers to utilize Performance Based Maintenance then statistical data may well be retained for extended periods to assist with future adjustments in time intervals.

2. Time-Based Protection System Maintenance (TBM~~)~~) Programs

A. What does this Maintenance Standard say about commissioning? Is it necessary to have documentation in your maintenance history of the completion of commission testing?

~~Commissioning tests are regarded as a construction activity, not a maintenance activity.~~

This standard does not establish requirements for commission testing. Commission testing includes all testing activities necessary to conclude that a facility has been built in accordance with design. While a thorough commission testing program would include, either directly or indirectly, the verification of all those Protection System attributes addressed by the maintenance activities specified on Table 1a of PRC-005-2, verification of the adequacy of initial installation necessitates the performance of testing and inspections that go well beyond these routine maintenance activities.

However, many of the Protection System attributes which are verified during commission testing are not subject to age related or service related degradation and need not be re-verified within an ongoing maintenance program. Example – it is not necessary to re-verify correct terminal strip wiring on an ongoing basis.

PRC-005-2 assumes that thorough commission testing was performed prior to a protection system being placed in service. PRC-005-2 requires performance of maintenance activities that are deemed necessary to detect and correct plausible age and service related degradation of components such that a properly built and commission tested Protection System will continue to function as designed over its service life.

It should be noted that commission testing frequently is performed by a different organization than that which is responsible for the ongoing maintenance of the Protection System. Furthermore, the commission testing activities will not necessarily correlate directly with the maintenance activities required by the standard. As such, it is very likely that commission testing records will deviate significantly from maintenance records in both form and content and therefore, it is not necessary to maintain commission testing records within the maintenance program documentation.

An entity would be wise to retain commissioning records to show a maintenance start date. (See next FAQ).

B. How do you determine the initial due date for maintenance?

The initial due date for maintenance should be based upon when a facility and its associated Protection System were placed in service. Alternatively, an entity may choose to use the date of completion of the commission testing of the Protection System component as the starting point in determining its first maintenance due dates. Whichever method is chosen, for newly installed Protection Systems the maintenance program should clearly identify when maintenance is first due.

~~B.~~C. The established maximum allowable intervals do not align well with the scheduled outages for my power plant. Can I extend the maintenance to the next scheduled outage following the established maximum interval?

No. You must complete your maintenance within the established maximum allowable intervals in order to be compliant. You will need to schedule your maintenance during available outages to complete your maintenance as required, even if it means that you may do protective relay maintenance more frequently than the maximum allowable intervals.

~~C.~~D. If I am unable to complete the maintenance as required due to a major natural disaster (hurricane, earthquake, etc), how will this affect my compliance with this standard.

The NERC Sanction Guidelines provides that the Compliance Monitor will consider extenuating circumstances when considering any sanctions.[1]

~~D.~~E. What if my observed testing results show a high incidence of out-of-tolerance relays, or, even worse, I am experiencing numerous relay misoperations due to the relays being out-of-tolerance?

Any entity can choose to test some or all of their Protection System more frequently (or, to express it differently, exceed the minimum requirements of the Standard). Particularly, if you find that the maximum intervals in the Standard do not achieve your expected level of performance, it is understandable that you would maintain the related equipment more frequently.

F. We believe that the 3-month interval between inspections is unneccessary, why can we not perform these inspections twice per year?

The standard drafting team believes that routine monthly inspections are the norm. To align routine station inspections with other important inspections the 3-month interval was chosen. In lieu of station visits many activities can be accomplished with automated monitoring and alarming.

G. Our maintenance plan calls for us to perform routine protective relay tests every 3 years; if we are unable to achieve this schedule but we are able to complete the procedures in less than the Maximum Time Interval then are we in or out of compliance?

You are out of compliance. You must maintain your equipment to your stated intervals within your maintenance plan. The protective relays (and any Protection System component) cannot be tested at intervals that are longer than the maximum allowable interval stated in the Tables. Therefore you should design your maintenance plan such that it is not in conflict with the

1 Sanction Guidelines of the North American Electric Reliability Corporation. Effective January 15, 2008.

Minimum Activities and the Maximum Intervals. You then must maintain your equipment according to your maintenance plan.

3. Performance-Based Protection System Maintenance (PBM~~)~~) Programs

A. I'm a small entity and cannot aggregate a population of Protection System components to establish a segment required for a Performance-Based Protection System Maintenance Program. How can I utilize that opportunity?

Multiple asset owning entities may aggregate their individually owned populations of individual Protection System components to create a segment that crosses ownership boundaries. All entities participating in a joint program should have a single documented joint management process, with consistent Protection System Maintenance Programs (practices, maintenance intervals and criteria), for which the multiple owners are individually responsible with respect to the requirements of the Standard. The requirements established for performance-based maintenance must be met for the overall aggregated program on an ongoing basis.

The aggregated population should reflect all factors that affect consistent performance across the population, including any relevant environmental factors such as geography, power-plant vs. substation, and weather conditions.

B. Can an owner go straight to a performance-based maintenance program schedule, if they have previously gathered records?

Yes. An owner can go to a performance-based maintenance program immediately. The owner will need to comply with the requirements of a performance-based maintenance program as listed in the standard. Gaps in the data collected will not be allowed; therefore, if an owner finds that a gap exists such that they can not prove that they have collected the data as required for a performance-based maintenance program then they will need to wait until they can prove compliance.

C. When establishing a ~~perfomance~~performance-based maintenance program, can I use test data from the device manufacturer, or industry survey results, as results to help establish a basis for my performance-based intervals?

No. You must use actual in-service test data for the components in the segment~~—~~.

D. What types of misoperations or events are not considered countable events in the performance-based Protection System Maintenance (PBM~~)~~) Program?

Countable events are intended to address conditions that are attributed to hardware failure or calibration failure; that is, conditions that reflect deteriorating performance of the component~~-~~. These conditions include any condition where the device previously worked properly, then, due to changes within the device, malfunctioned.

Human errors resulting in Protection System Misoperations during system installation or maintenance activities are not considered countable events~~-~~. Examples of excluded human errors include relay setting errors, design errors, wiring errors, inadvertent tripping of devices

during testing or installation, and misapplication of Protection System components. Examples of misapplication of Protection System components include wrong CT or PT tap position, protective relay function misapplication, and components not specified correctly for their installation.

Certain types of Protection System component errors that cause Misoperations are not considered countable events~~.~~. Examples of excluded component errors include device malfunctions that are correctable by firmware upgrades and design errors that do not impact protection function.

E. What are some examples of methods of correcting segment perfomance for Performance-Based Maintenance?

There are a number of methods that may be useful for correcting segment performance for mal-performing segments in a performance-based maintenance system. Some examples are listed below.

- The maximum allowable interval~~,~~, as established by the performance-based maintenance system, can be decreased. This may, however, be slow to correct the performance of the segment~~.~~.
- Identifiable sub-groups of components within the established segment~~,~~, which have been identified to be the mal-performing portion of the segment, can be broken out as an independent segment for target action. Each resulting segment must satisfy the minimum population requirements for a performance-based maintenance program in order to remain within the program.
- Targeted corrective actions can be taken to correct frequently occurring problems. An example would be replacement of capacitors within electromechanical distance relays if bad capacitors were determined to be the cause of the mal-performance.
- Components within the mal-performing segment can be replaced with other components (electromechanical distance relays with microprocessor relays, for example) to remove the mal-performing segment.

F. If I find (and correct) a maintenance-correctable issue as a result of a misoperation investigation (Re: PRC-004), how does this affect my performance-based maintenance program?

If you perform maintenance on a Protection System component for any reason (including as part of a PRC-004 required misoperation investigation/corrective action), the actions performed count as a maintenance activity, and "reset the clock" on everything you've done. In a performance-based maintenance program, you also need to record the maintenance-correctable issue with the relevant component group and use it in the analysis to determine your correct performance-based maintenance interval for that component group.

G. Why are batteries excluded from PBM~~?~~? What about exclusion of batteries from condition based maintenance?

Batteries are the only element of a Protection System that is a perishable item with a shelf life. As a perishable item batteries require not only a constant float charge to maintain their freshness (charge), but periodic inspection to determine if there are problems associated with their aging process and testing to see if they are maintaining a charge or can still deliver their rated output as required.

Besides being perishable, a second unique feature of a battery that is unlike any other Protection System element is that a battery uses chemicals, metal alloys, plastics, welds, and bonds that must interact with each other to produce the constant dc source required for Protection Systems, undisturbed by ac system disturbances.

No type of battery manufactured today for Protection System application is free from problems that can only be detected over time by inspection and test. These problems can arise from variances in the manufacturing process, chemicals and alloys used in the construction of the individual cells, quality of welds and bonds to connect the components, the plastics used to make batteries and the cell forming process for the individual battery cells.

Other problems that require periodic inspection and testing can result from transportation from the factory to the job site, length of time before a charge is put on the battery~~,~~. the method of installation, the voltage level and duration of equalize charges, the float voltage level used, and the environment that the battery is installed in.

All of the above mentioned factors and several more not discussed here are beyond the control of the Functional Entities that want to use a ~~Performance~~performance-based Protection System Maintenance (PBM~~)~~) program. These inherent variances in the aging process of a battery cell make establishment of a designated segment based on manufacturer and type of battery impossible.

The whole point of PBM is that if all variables are isolated then common aging and performance criteria would be the same. However, there are too many variables in the electro-chemical process to completely isolate all of the performance-changing criteria.

Similarly Functional Entities that want to establish a condition-based maintenance program using Level 3 monitoring of the battery used in a station dc supply can not do so. Inspection of the battery is required on a Maximum Maintenance Interval listed in the tables due to the aging processes of station batteries~~.~~. However, Level 3 monitoring of a battery can eliminate the requirement for periodic testing and some inspections (see Level 3 Monitoring Attributes for Component of table 1c).

H. Please provide an example of the calculations involved in extending maintenance time intervals using PBM.

Entity has 1000 GE-HEA lock-out relays; this is greater than the minimum sample requirement of 60.

They start out testing all of the relays within the prescribed Table requirements (6 year max) by testing the relays every 5 years. The entity's plan is to test 200 units per year; this is greater than the minimum sample size requirement of 30.

- For the sake of example only the following will show 6 failures per year, reality may well have different numbers of failures every year. PBM requires annual assessment of failures found per units tested.

After the first year of tests the entity finds 6 failures in the 200 units tested. 6/200= 3% failure rate.

- This entity is now allowed to extend the maintenance interval if they choose.

The entity chooses to extend the maintenance interval of this population segment out to 10 years.

- This represents a rate of 100 units tested per year; entity selects 100 units to be tested in the following year.
- After that year of testing these 100 units the entity again finds 6 failed units. 6/100= 6% failures.
- This entity has now exceeded the acceptable failure rate for these devices and must accelerate testing of all of the units at a higher rate such that the failure rate is found to be less than 4% per year; the entity has three years to get this failure rate down to 4% or less (per year).

In response to the 6% failure rate, the entity decreases the testing interval to 8 years. This means that they will now test 125 units per year (1000/8). The entity has just two years left to get the test rate corrected.

- After a year they again find 6 failures out of the 125 units tested. 6/125= 5% failures.

In response to the 5% failure rate, the entity decreases the testing interval to 7 years. This means that they will now test 143 units per year (1000/7). The entity has just one year left to get the test rate corrected.

- After a year they again find 6 failures out of the 143 units tested. 6/143= 4.2% failures.

(Note that the entity has tried 5 years and they were under the 4% limit and they tried 7 years and they were over the 4% limit. They must be back at 4% failures or less in the next year so they might simply elect to go back to 5 years.)

Instead, in response to the 5% failure rate, the entity decreases the testing interval to 6 years. This means that they will now test 167 units per year (1000/6).

- After a year they again find 6 failures out of the 167 units tested. 6/167= 3.6% failures.

Entity found that they could maintain the failure rate at no more than 4% failures by maintaining the testing interval at 6 years or less. Entity chose 6 year interval and effectively extended their TBM (5 years) program by 20%.

A note of practicality is that an entity will probably be in better shape to lengthen the intervals between tests if the failure rate is less than 2%. But the requirements allow for annual adjustments if the entity desires. As a matter of maintenance management, an ever-changing test rate (units tested / year) may be un-workable.

Note that the “5% of components” requirement effectively sets a practical limit of 20 year maximum PBM interval. Also of note is the “3 years” requirement; this is there to prevent an entity from “gaming the system”. An entity might arbitrarily extend time intervals from 6 years to 20 years. In the event that an entity finds a failure rate greater than 4% then the test rate must be accelerated such that within three years the failure rate must be brought back down to 4% or less.

Here is a table that demonstrates the values discussed:

Year #	Total Population (P)	Test Interval (I)	Units to be Tested (U= P/I)	# of Failures Found (F)	Failure Rate (=F/U)	Decision to Change Interval Yes or No	Interval Chosen
1	1000	5 yrs	200	6	3%	Yes	10 yrs
2	1000	10 yrs	100	6	6%	Yes	8 yrs
3	1000	8 yrs	125	6	5%	Yes	7 yrs
4	1000	7 yrs	143	6	4.2%	Yes	6 yrs
5	1000	6 yrs	167	6	3.6%	No	6 yrs

V Group by Monitoring Level:

1. **All Monitoring Levels**

   A. **Please provide an example of the level 1 monitored (unmonitored~~)~~) versus other levels of monitoring available?**

A level 1 (Unmonitored) Protection System has no monitoring and alarm circuits on the Protection System components.

A level 2 (Partially) monitored Protection System or an individual component of a level 2 (Partially) monitored Protection System has monitoring and alarm circuits on the Protection System components. The alarm circuits must alert a 24-hr staffed operations center.

There can be a combination of monitored and unmonitored Protection Systems within any given substation or plant; there can also be a combination of monitored and unmonitored components within any given Protection System.

Example #1: A combination of level 2 (Partially) monitored and level 1 (unmonitored~~)~~) components within a given Protection System is:

- ◊ A microprocessor relay with an internal alarm connected to SCADA to alert 24-hr staffed operations center. (level 2)
- ◊ Instrumentation transformers, with no monitoring, connected as inputs to that relay. (level 1)
- ◊ A vented lead-acid battery with low voltage alarm connected to SCADA. (level 2)
- ◊ A circuit breaker with a trip coil~~,~~, with no monitor circuit. (level 1)

Given the particular components, conditions, and using the Table 1 ("Maximum Allowable Testing Intervals and Maintenance Activities"), the particular components have maximum test intervals of:

- ◊ The microprocessor relay is verified every 12 calendar years.
- ◊ The instrumentation transformers are verified every 12 calendar years.
- ◊ The battery is verified every 6 calendar years by performing a performance capacity test of the entire battery bank or by evaluating the measured cell/unit internal ohmic values to station battery baseline every 18 months.
- ◊ The circuit breaker trip circuits and auxiliary relays are tested every 6 calendar years.

Example #2: A combination of level 2 (partially) monitored and level 1 (unmonitored~~)~~) components within a given Protection System is:

- ◊ A microprocessor relay with integral alarm that is not connected to SCADA. (level 1)
- ◊ Instrument transformers, with no monitoring, connected as inputs to that relay. (level 1)
- ◊ A vented lead-acid battery with low voltage alarm connected to SCADA. (level 2)
- ◊ A circuit breaker with a trip coil~~,~~, with no circuits monitored. (level 1)

Given the particular components, conditions, and using the Table 1 ("Maximum Allowable Testing Intervals and Maintenance Activities"), the particular components have maximum test intervals of:

- ◊ The microprocessor relay is verified every 6 calendar years.
- ◊ The instrumentation transformers are verified every 12 calendar years.
- ◊ The battery is verified every 6 calendar years by performing a performance capacity test of the entire battery bank or by evaluating the measured cell/unit internal ohmic values to station battery baseline every 18 months.
- ◊ The circuit breaker trip circuits and auxiliary relays are tested every 6 calendar years.

Example #3: A combination of level 2 (partially) monitored and level 1 (unmonitored~~)~~) components within a given Protection System is:

- ◊ A microprocessor relay with alarm connected to SCADA to alert 24-hr staffed operations center. (level 2)
- ◊ Instrument transformers, with no monitoring, connected as inputs to that relay (level 1)
- ◊ Battery without any alarms connected to SCADA (level 1)
- ◊ Circuit breaker with a trip coil~~,~~, with no circuits monitored (level 1)

Given the particular components, conditions, and using the Table 1 ("Maximum Allowable Testing Intervals and Maintenance Activities"), the particular components shall have maximum test intervals of:

- ◊ The microprocessor relay is verified every 12 calendar years.
- ◊ The instrument transformers are verified every 12 calendar years.
- ◊ The battery is verified every 3 months, every 18 months, plus, depending upon the type of battery used it may be verified at other maximum test intervals, as well.
- ◊ The circuit breaker trip circuits and auxiliary relays are tested every 6 calendar years.

B. What is the intent behind the different levels of monitoring?

The intent behind different levels of monitoring is to allow less frequent manual intervention when more information is known about the condition of Protection System components.

C. Do all monitoring levels apply to all components in a protection system?

No. For some components in a protection system, certain levels of monitoring will not be relevant. See table below:

D. My microprocessor relays and dc circuit alarms are contained on relay panels in a 24-hour attended control room. Does this qualify as an extended time interval condition-based system?

Yes, provided the station attendant monitors the alarms and other indications and reports them within the given time limits that are stated in the criteria of the Table 1b or Table 1c.

Monitoring Level Applicability Table

(See related definition and decision tree for various level requirements)

Protection Component	Level 1 (Unmonitored)	Level 2 (Partially Monitored)	Level 3 (Fully Monitored)
Protective relays	Y	Y	Y
Instrument transformer Inputs to Protective Relays	Y	N	Y
Protection System control circuitry (Other than aux-relays & lock-out relays)	Y	Y	Y
Aux-relays & lock-out relays	Y	N	N
DC supply (other than station batteries~~)~~)	Y	Y	Y
Station batteries	Y	N	N
Protection system communications equipment and channels	Y	Y	Y
UVLS and UFLS relays that comprise a protection scheme distributed over the power system	Y	Y	Y
SPS~~,~~, including verification of end-to-end performance, or relay sensing for centralized UFLS or UVLS systems	Y	Y	Y

Y = Monitoring Level Applies
N = Monitoring Level Not Applicable

~~D.~~E. When documenting the basis for inclusion of components into the appropriate levels of monitoring as per Requirement R2 of the standard, is it necessary to provide this documentation via a device by device listing of components and the specific monitoring attributes of each device?

No. While maintaining this documentation on the device level would certainly be permissible, it is not necessary. Global statements can be made to document appropriate levels of monitoring for the entire population of a component type or portion thereof.

For example, it would be permissible to document the conclusion that all BES substation dc systems are Level 2 - Partially Monitored by stating the following within the program description:

> "All substation dc systems are considered Level 2 - Partially Monitored and subject to Table 1b requirements as all substation dc systems are equipped with dc voltage alarms and ground detection alarms that are sent to the manned control center."

Similarly, it would be acceptable to use a combination of a global statement and a device level list of exclusions. Example:

> "Except as noted below, all substation dc systems are considered Level 2 - Partially Monitored and subject to Table 1b requirements as all substation dc systems are equipped with dc voltage alarms and ground detection alarms that are sent to the manned control center. The dc systems of Substation X, Substation Y, and Substation Z are considered Level 1 - Unmonitored and subject to Table 1a requirements as they are not equipped with ground detection capability."

Regardless whether this documentation is provided via a device by device listing of monitoring attributes, by global statements of the monitoring attributes of an entire population of component types, or by some combination of these methods, it should be noted that auditors may request supporting drawings or other documentation necessary to validate the inclusion of the device(s) within the appropriate level of monitoring. This supporting background information need not be maintained within the program document structure but should be retrievable if requested by an auditor.

~~E.~~F. How do I know what monitoring level I am under? – Include Decision Trees

Decision Trees are provided below for each of the following categories of equipment to assist in the determination of the level of monitoring.

- ◊ Protective Relays
- ◊ Current and Voltage Sensing Devices
- ◊ Protection System Control Circuitry
- ◊ Station dc Supply
- ◊ Protection System ~~Communications Equipment and Channels~~Communication Systems

RELAY
MONITOR LEVEL
DECISION TREE

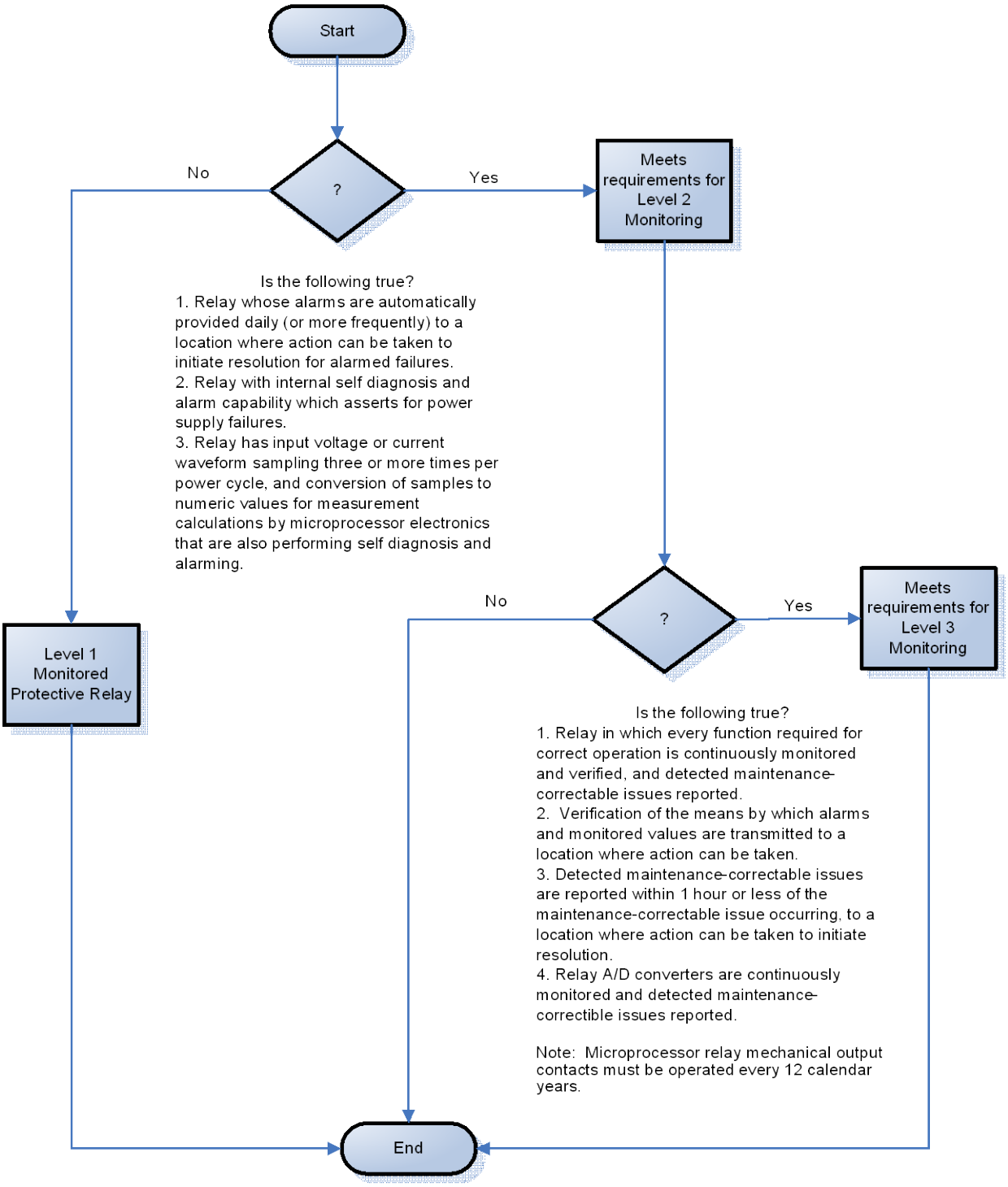

VOLTAGE AND CURRENT SENSING DEVICES

MONITOR LEVEL DECISION TREE

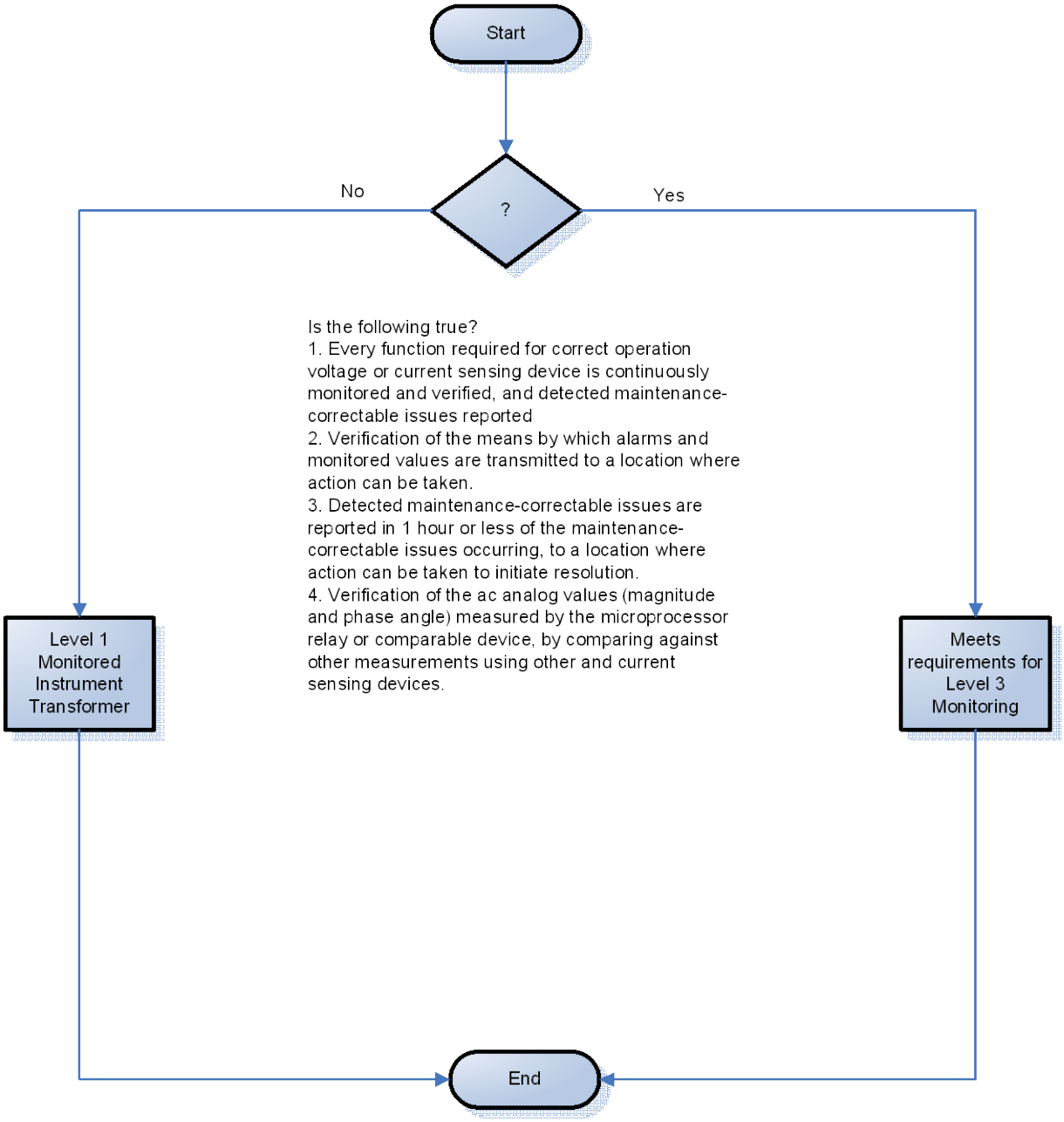

CONTROL CIRCUIT
MONITOR LEVEL
DECISION TREE

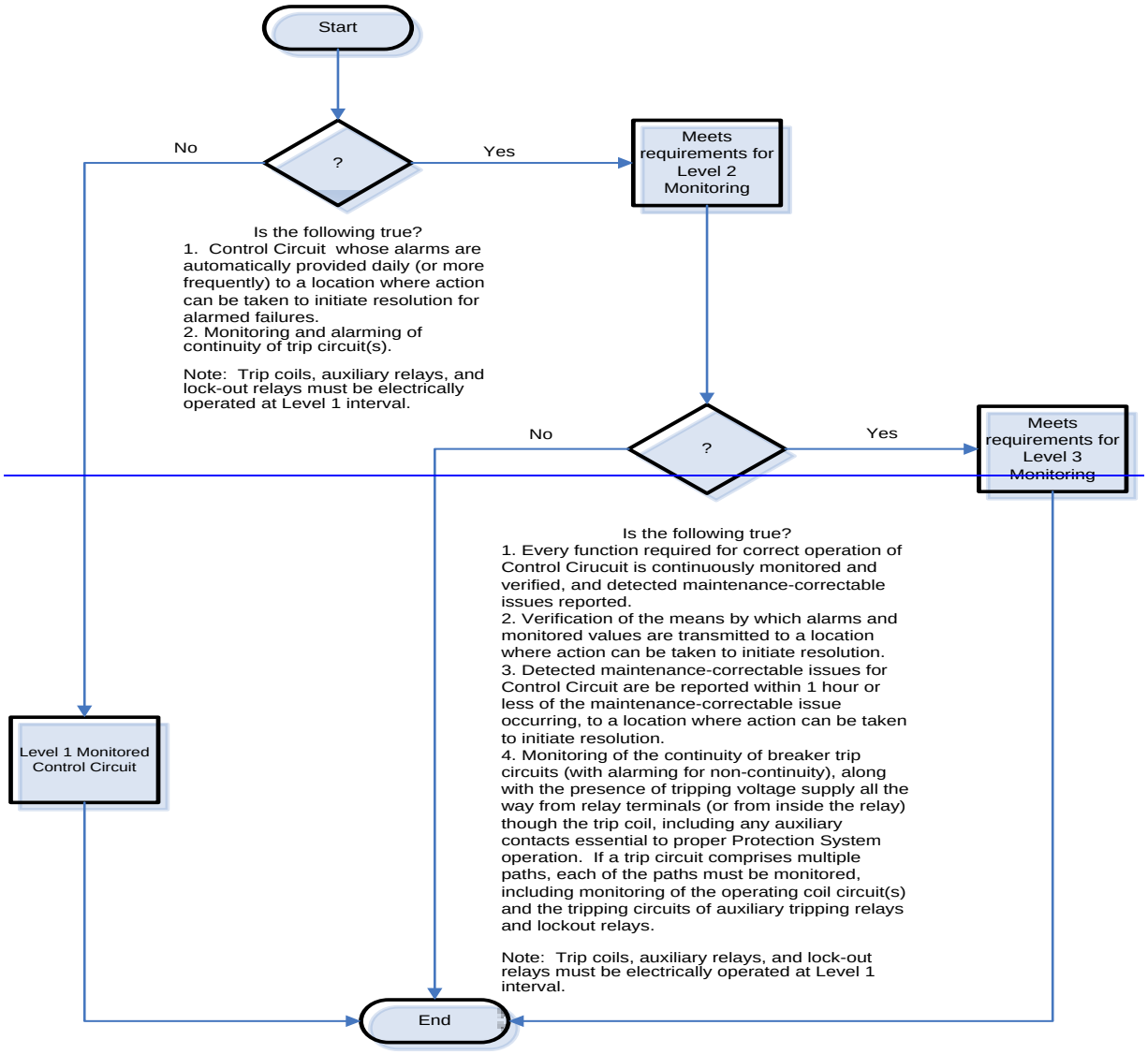

CONTROL CIRCUIT
MONITOR LEVEL
DECISION TREE

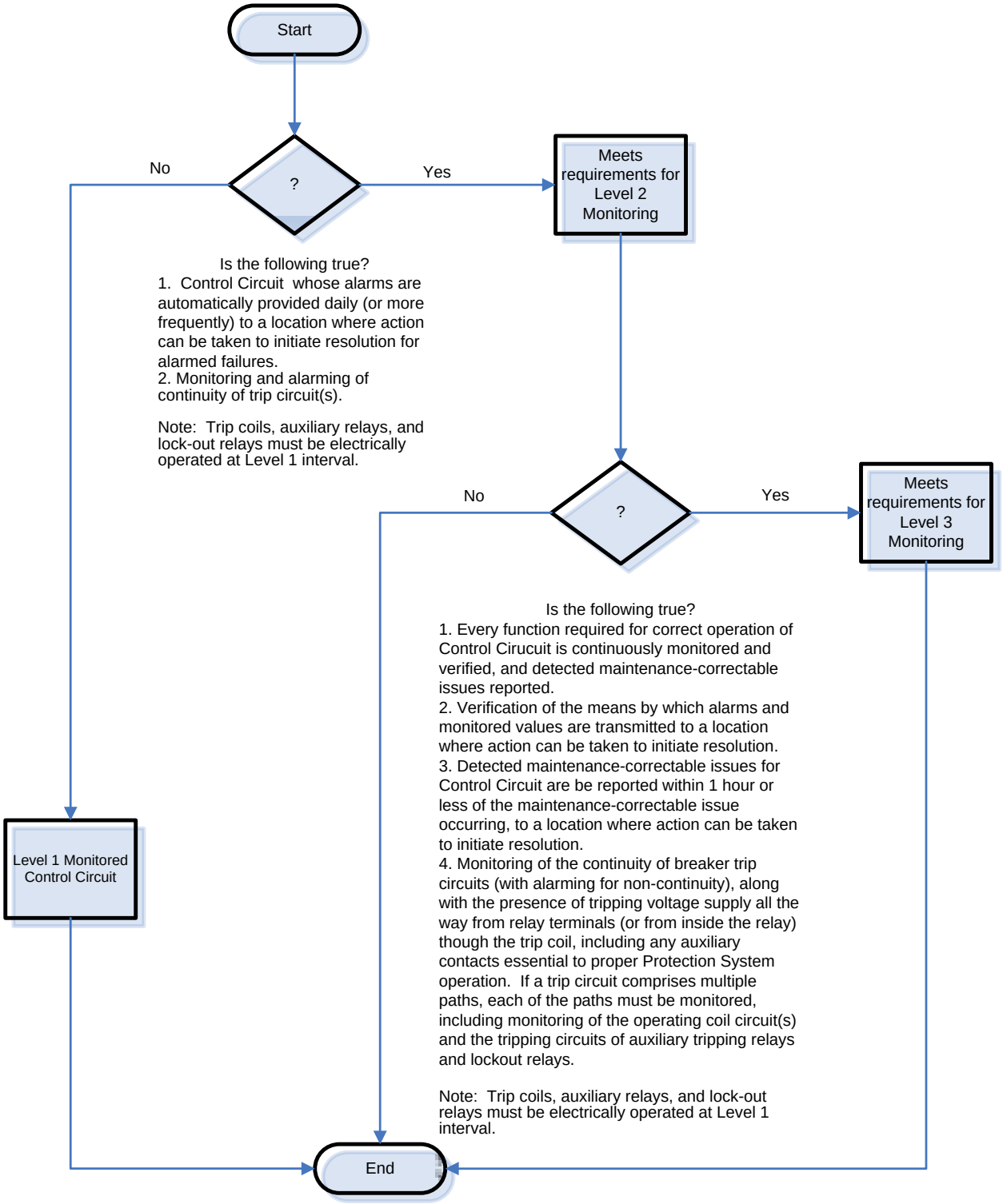

DC SUPPLY
MONITOR LEVEL
DECISION TREE

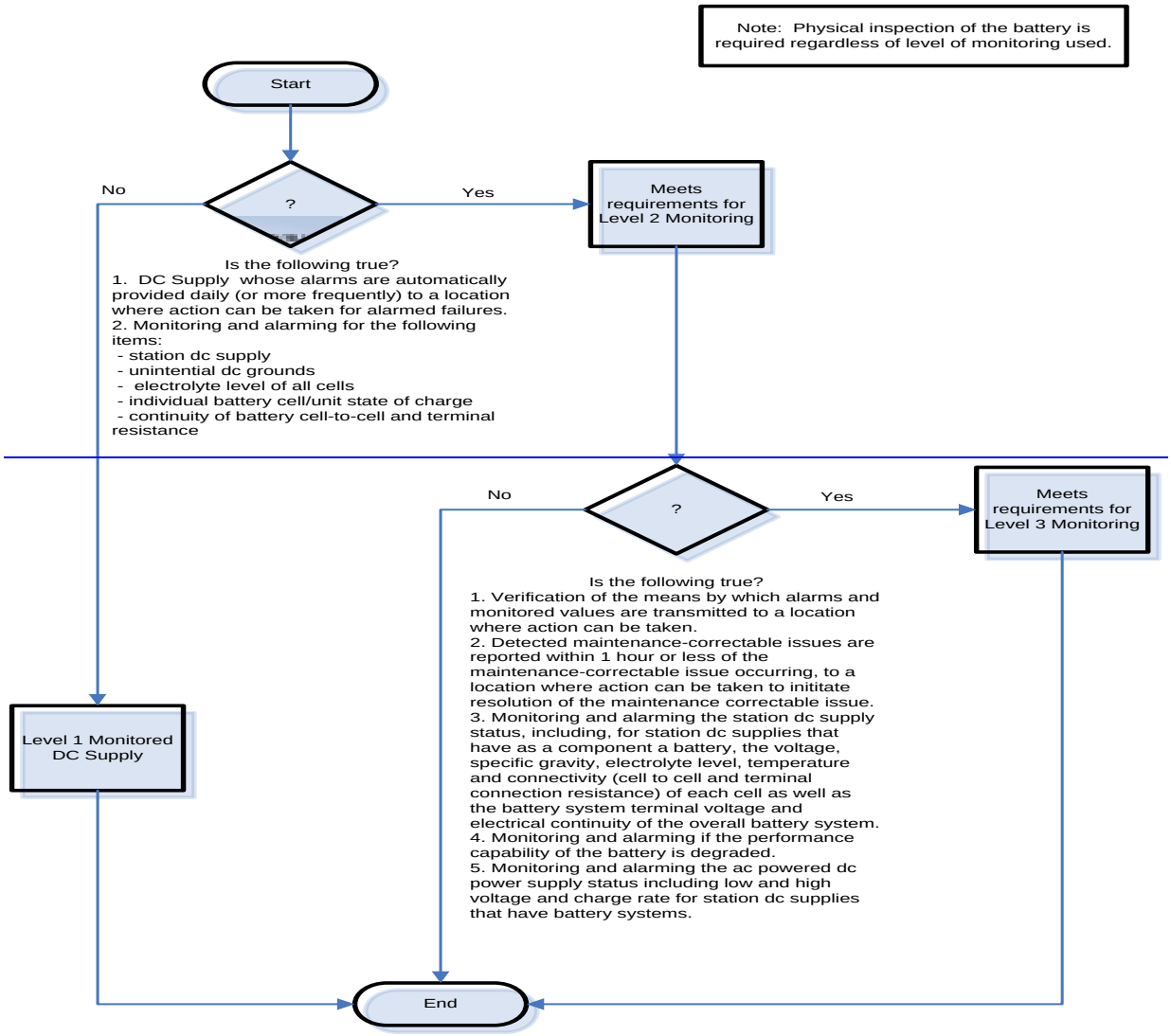

DC SUPPLY
MONITOR LEVEL
DECISION TREE

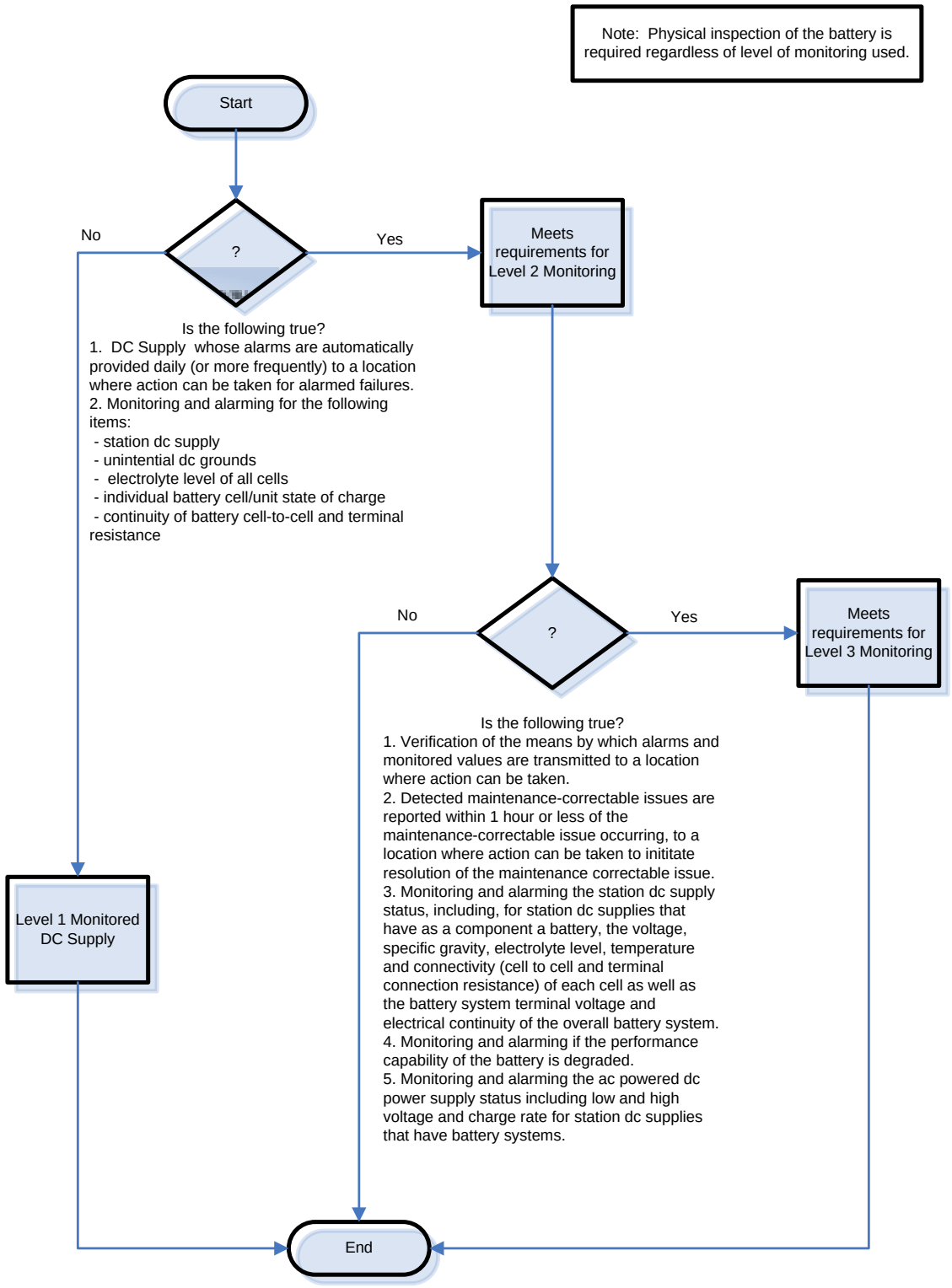

COMMUNICATION SYSTEM
MONITOR LEVEL
DECISION TREE

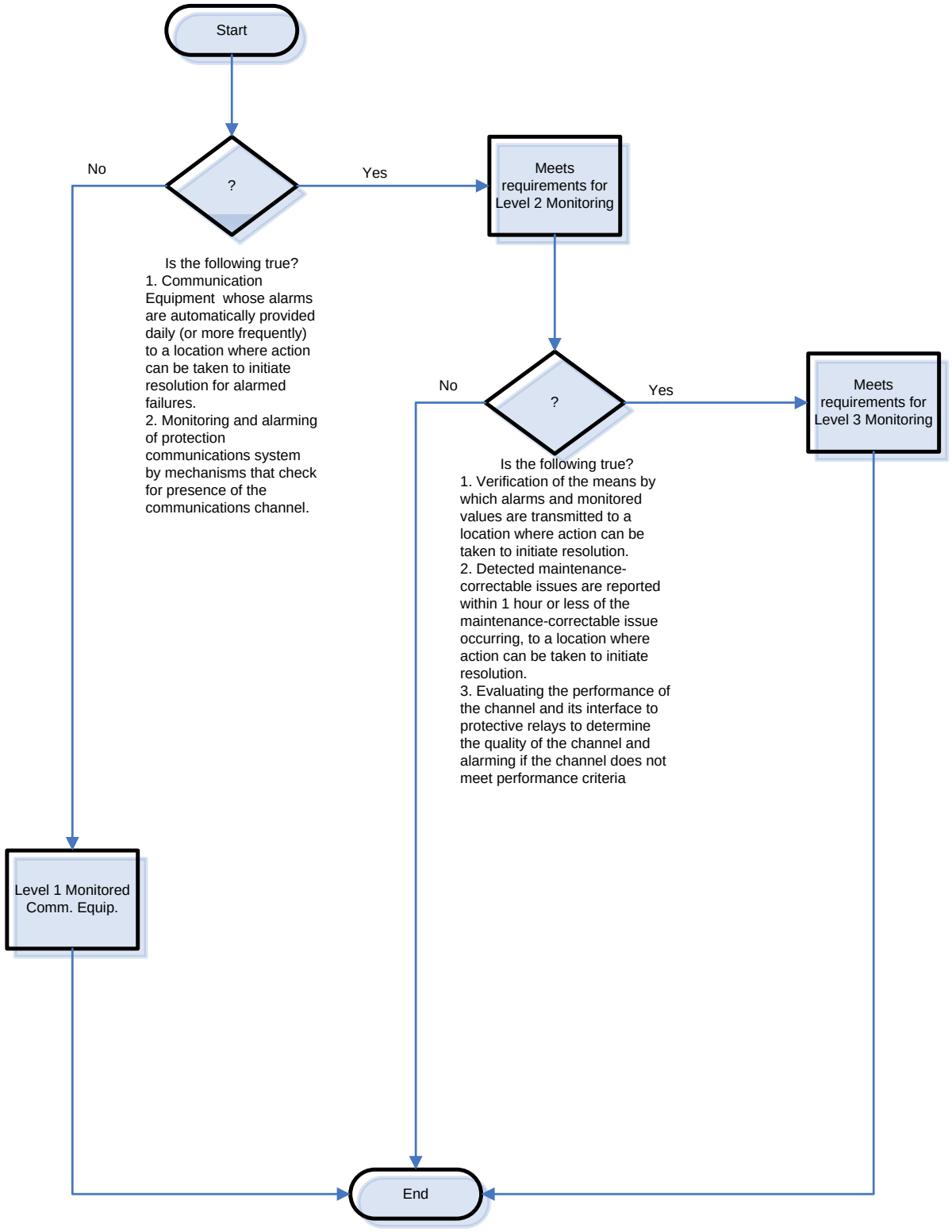

2. **Level 1 Monitored Protection Systems (Unmonitored Protection Systems)**

   A. **We have an electromechanical (unmonitored~~)~~) relay that has a trip output to a lockout relay (unmonitored) which trips our transformer off-line by tripping the transformer's high-side and low-side circuit breakers. What testing must be done for this system?**

   This system is made up of components that are level 1 (unmonitored~~).~~). Assuming a time-based protection system maintenance program schedule, each component must be maintained per Table 1a – Level 1 Monitoring Maximum Allowable Testing Intervals and Maintenance Activities.

3. **Level 2 Monitored Protection Systems (Partially Monitored Protection Systems)**

   A. **We have a 30 year old oil circuit breaker with a red indicating lamp on the substation relay panel that is illuminated only if there is continuity through the breaker trip coil~~.~~. There is no SCADA monitor or relay monitor of this trip coil. The line protection relay package that trips this circuit breaker is a microprocessor relay that has an integral alarm relay that will assert on a number of conditions that includes a loss of power to the relay. This alarm contact connects to our SCADA system and alerts our 24-hour operations center of relay trouble when the alarm contact closes. This microprocessor relay trips the circuit breaker only and does not monitor trip coil continuity or other things such as trip current. Is this an unmonitored or a partially-monitored system? How often must I perform maintenance?**

   The protective relay is a level 2 (partially) monitored component of your protection system and can be maintained every 12 years or when a maintenance correctable issue arises. Assuming a time-based protection system maintenance program schedule, this component must be maintained per Table 1b – Level 2 Monitoring Maximum Allowable Testing Intervals and Maintenance Activities

   The rest of your protection system contains components that are level 1 (unmonitored~~)~~) and must be maintained within at least the maximum verification intervals of Table 1a~~.~~.

   B. **How do I verify the A/D converters of microprocessor~~-~~-based relays?**

   There are a variety of ways to do this. Examples include using values gathered via data communications and automatically comparing these values with values from other sources, and using groupings of other measurements (such as vector summation of bus feeder currents) for comparison if calibration requirements assure acceptable measurement of power system input values. Other methods are possible.

   C. **For a level 2 monitored Protection System (Partially Monitored Protection System) pertaining to Protection System communications equipment and channels, how is the performance criteria involved in the maintenance program?**

   The entity determines the performance criteria for each installation, depending on the technology implemented. If the communication channel performance of a Protection System varies from the pre-determined performance criteria for that system, these results should be investigated and resolved.

D. My system has alarms that are gathered once daily through an auto-polling system; this is not really a conventional SCADA system but does it meet the Table 1b requirements for inclusion as Level 2?

Yes, provided the auto-polling that gathers the alarms reports those alarms to a location where the action can be initiated to correct the maintenance-correctable issue. This location does not have to be the location of the engineer or the technician that will eventually repair the problem, but rather a location where the action can be initiated.

4. Level 3 Monitored Protection Systems (Fully Monitored Protection Systems)

A. Why are there activities defined for a level-3 monitored Protection System? The technology does not seem to exist at this time to implement this monitoring level.

There may actually be some equipment available that is capable of meeting level-3 monitoring criteria, in which case it may be maintained according to Table 1c~~.~~

. However, even if there is no equipment available today that can meet this level of monitoring~~,~~: the Standard establishes the necessary requirements for when such equipment becomes available. By creating a roadmap for development, this provision makes the Standard technology-neutral. The standard drafting team wants to avoid the need to revise the Standard in a few years to accommodate technology advances that are certainly coming to the industry.

Appendix A — Protection System Maintenance Standard Drafting Team

Charles W. Rogers
Chairman
Consumers Energy Co.

John B. Anderson
Xcel Energy

Merle E. Ashton
Tri-State ~~Transmission and Generation Cooperative~~G&T

Bob Bentert
Florida Power & Light Company

~~Al Calafiore~~
~~*NERC Staff*~~
~~North American Electric Reliability Corporation~~

John Ciufo
Hydro One Inc

~~Richard Ferner~~
~~Western Area Power Administration~~
Sam Francis
Oncor

Carol A Gerou
Midwest Reliability Organization

~~Roger D Greene~~
William Shultz
Southern Company Generation

Russell C Hardison
Tennessee Valley Authority

David Harper
NRG Texas Maintenance Services

~~John Kruse~~

Mark Lukas
ComEd

Al McMeekin
NERC Staff
North American Electric Reliability Corporation

Mark Peterson
Great River Energy

William Shultz
Southern Company Generation

Leonard Swanson, Jr
National Grid USA

Eric A Udren
Quanta Technology

Philip B Winston
Georgia Power Company

John A Zipp
ITC Holdings

Index

3-month interval, 24

aggregate, 24, 25

alarm, 16, 17, 18, 29, 30, 38

automated monitoring and alarming, 24

auto-restoration, 5

auxiliary relay, 11

batteries, 12, 13, 14, 15, 26, 27, 31

battery, 10, 12, 13, 14, 15, 26, 27, 29, 30

broken, 7

capacity, 14, 15, 29, 30

channel performance, 18, 38

charger, 12, 13, 14

check-off, 15

closing circuits, 5

commission, 23

Communication Site Batteries, 15

communications, 7, 11, 16, 17, 18, 31, 38

communications channel, 16, 17

communications-assisted-trip, 11

component, 2, 5, 11, 14, 19, 22, 23, 25, 26, 29, 31, 32, 38

continuity, 12, 13, 14, 38

corrective, 2, 5, 26

countable events, 2, 25

current and voltage measurements, 9

data retention, 22

DC ground, 15

documentation, 6, 21, 23, 31, 32

documentation method, 15

electromechanical, 7, 10, 26, 38

electro-mechanical relays, 6

evidence, 6, 22

fiber optic I/O scheme, 17

firmware, 5, 25

frequency-shift, 16

fully monitored, 16, 21

guard, 16, 17

Level 1, 16, 17, 31, 32, 38

Level 2, 16, 17, 31, 32, 38

Level 3, 16, 17, 27, 31, 39

lockout relay, 11, 20, 38

maintenance correctable issue, 2, 38

maintenance plan, 6, 22, 24

maximum allowable interval, 24, 26

microprocessor, 5, 6, 7, 9, 10, 11, 13, 14, 26, 29, 30, 38

Misoperations, 2, 25

nickel-cadmium, 14, 15

ohmic, 14, 15, 29, 30

out-of-service, 7

partially monitored, 11, 16

PBM, 24, 25, 26, 27

performance-based maintenance, 25, 26

pilot wire, 16

PMU, 19

power-line carrier, 16

pressure relays, 11, 12

protective relays, 5, 6, 7, 8, 10, 12, 13, 16, 18, 20

reclosing relays, 5

Restoration, 5

sample list of devices, 20

segment, 2, 24, 25, 26, 27

settings, 2, 6, 7, 12, 22

SPS, 5, 19, 31

Table 1a, 2, 3, 5, 23, 32, 38

Table 1b, 5, 11, 17, 32, 38

Table 1c, 2, 5, 21, 39

TBM, 22

trip coil, 10, 11, 29, 30, 38

trip signal, 11, 17

trip test, 11

tripping circuits, 10

UFLS, 18, 19, 31

unintentional ground, 15

unmonitored, 16, 29, 30, 38

UVLS, 18, 19, 31

valve-regulated lead-acid, 15

vented lead-acid, 15, 29

voltage and current sensing devices, 2, 8, 10

VRLA, 14, 15

NERC
NORTH AMERICAN ELECTRIC
RELIABILITY COUNCIL

PRC-005-2

Protection System Maintenance

Draft Supplementary Reference

May 27, 2010

Prepared by the

Protection System Maintenance and Testing Standard Drafting Team

PRC-005-2

Project 2007-17

Table of Contents

1. Introduction and Summary 3
2. Need for Verifying Protection System Performance 3
2.1 Existing NERC Standards for Protection System Maintenance and Testing 3
2.2 Proposed Modification to NERC Glossary Definition 4
2.3 Applicability of New Protection System Maintenance Standards 4
2.4 Applicable Relays 4
3. Relay Product Generations 5
4. Definitions 5
5. Time-Based Maintenance (TBM) Programs 6
Maintenance Practices 6
5.1 Extending Time-Based Maintenance 7
6. Condition-Based Maintenance (CBM) Programs 8
7. Time-Based versus Condition-Based Maintenance 9
8. Maximum Allowable Verification Intervals 9
Maintenance Tests 9
8.1 Table of Maximum Allowable Verification Intervals 10
Level 1 Monitoring (Unmonitored) Table 1a 11
Level 2 Monitoring (Partially Monitored) Table 1b 11
Level 3 Monitoring (Fully Monitored) Table 1c 11
8.2 Retention of Records 12
8.3 Basis for Table 1 Intervals 13
8.4 Basis for Extended Maintenance Intervals for Microprocessor Relays 13
9. Performance-Based Maintenance Process 15
9.1 Minimum Sample Size 16
10. Overlapping the Verification of Sections of the Protection System 18
11. Monitoring by Analysis of Fault Records 18
12. Importance of Relay Settings in Maintenance Programs 19
13. Self-Monitoring Capabilities and Limitations 20
14. Notification of Protection System Failures 20
15. Maintenance Activities 21
15.1 Protective Relays 21
15.2 Voltage & Current Sensing Devices 21
15.3 DC Control Circuitry 22
15.4 Batteries and DC Supplies 23
15.5 Tele-protection equipment 23
15.6 Examples of Evidence of Compliance 24
16. References 26
Figures 27
Figure 1: Typical Transmission System 27
Figure 2: Typical Generation System 28
Figure 3: Requirements Flowchart 30
Appendix A 31
Appendix B — Protection System Maintenance Standard Drafting Team 34

This supplementary reference to PRC-005-2 borrows heavily from the technical reference by the System Protection and Control Task Force (SPCTF) (Protection System Maintenance Technical Reference paper approved by the Planning Committee in September 2007). Additionally, the Protection System Maintenance and Testing Standard Drafting Team (PSMTSDT) for PRC-005-2 (Project 2007-17) utilized maintenance program data from various generation and transmission utilities across the NERC boundaries; as well as data from IEEE and EPRI.

1. Introduction and Summary

NERC currently has four reliability standards that are mandatory and enforceable in the United States and address various aspects of maintenance and testing of Protection and Control systems. These standards are:

PRC-005-1 — *Transmission and Generation Protection System Maintenance and Testing*

PRC-008-0 — *Underfrequency Load Shedding Equipment Maintenance Programs*

PRC-011-0 — *UVLS System Maintenance and Testing*

PRC-017-0 — *Special Protection System Maintenance and Testing*

While these standards require that applicable entities have a maintenance program for Protection Systems, and that these entities must be able to demonstrate they are carrying out such a program, there are no specifics regarding the technical requirements for Protection System maintenance programs. Furthermore, FERC Order 693 directed additional modifications respective to Protection System maintenance programs. This revision of PRC-005-1 combines and replaces PRC-005, PRC-008, PRC-011 and PRC-017.

2. Need for Verifying Protection System Performance

Protective relays have been described as silent sentinels, and do not generally demonstrate their performance until a fault or other power system problem requires that they operate to protect power system elements, or even the entire Bulk Electric System (BES). Lacking faults or system problems, the protection systems may not operate for extended periods. A Misoperation - a false operation of a protection system or a failure of the protection system to operate, as designed, when needed - can result in equipment damage, personnel hazards, and wide area disturbances or unnecessary customer outages. A maintenance or testing program is used to determine the performance and availability of protection systems.

Typically, utilities have tested protection systems at fixed time intervals, unless they had some incidental evidence that a particular protection system was not behaving as expected. Testing practices vary widely across the industry. Testing has included system functionality, calibration of measuring relays, and correctness of settings. Typically, a protection system must be visited at its installation site and removed from service for this testing.

Fundamentally, a reliability standard for Protection System Maintenance and Testing requires the performance of the maintenance activities that are necessary to detect and correct plausible age and service related degradation of components such that a properly built and commissioned Protection System will continue to function as designed over its service life.

2.1 Existing NERC Standards for Protection System Maintenance and Testing

For critical BES protection functions, NERC standards have required that each utility or asset owner define a testing program. The starting point is the existing Standard PRC-005, briefly restated as follows:

Purpose: To ensure all transmission and generation Protection Systems affecting the reliability of the Bulk Electric System (BES) are maintained and tested.

PRC-005-1 is not specific on where the boundaries of the Protection Systems lie. However, the definition of Protection System in the NERC Glossary of Terms used in Reliability Standards indicates what must be included as a minimum.

Definition of *Protection System* (excerpted from the NERC Standards Glossary of Terms):

Protective relays, associated communication systems, voltage and current sensing devices, station batteries and dc control circuitry.

Applicability: Owners of generation and transmission Protection Systems.

Requirements: The owner shall have a documented maintenance program with test intervals. The owner must keep records showing that the maintenance was performed at the specified intervals.

2.2 Proposed Modification to NERC Glossary Definition

The Protection Systems Maintenance and Testing Standard Drafting Team (PSM SDT), proposes changes to the NERC glossary definition of *Protection Systems* as follows:

Protection System (modification) - Protective relays, communication systems necessary for correct operation of protective functions, voltage and current sensing devices inputs to protective relays and associated circuitry from the voltage and current sensing devices, station DC supply, and control circuitry, associated with protective functions from the station DC supply through the trip coil(s) of the circuit breakers or other interrupting devices.

2.3 Applicability of New Protection System Maintenance Standards

The BES purpose is to transfer bulk power. The applicability language has been changed from the original PRC-005:
"*...affecting the reliability of the Bulk Electric System (BES)…*"

To the present language:
"*… and that are applied on, or are designed to provide protection for the BES."*

The drafting team intends that this Standard will not apply to "merely possible" parallel paths, (sub-transmission and distribution circuits), but rather the standard applies to any Protection System that is designed to detect a fault on the BES and take action in response to that fault. The Standard Drafting Team does not feel that Protection Systems designed to protect distribution substation equipment are included in the scope of this standard; however, this will be impacted by the Regional definitions of the BES.

2.4 Applicable Relays

The NERC Glossary definition has a Protection System including relays, dc supply, current and voltage sensing devices, dc control circuitry and associated communications circuits. The relays to which this standard applies are those relays that use measurements of voltage, current, frequency and/or phase angle and provide a trip output to trip coils, dc control circuitry or associated communications equipment. This definition extends to IEEE device # 86 (lockout relay) and IEEE device # 94 (tripping or trip-free relay) as these devices are tripping relays that respond to the trip signal of the protective relay that processed the signals from the current and voltage sensing devices.

Relays that respond to non-electrical inputs or impulses (such as, but not limited to, vibration, pressure, seismic, thermal or gas accumulation) are not included.

3. Relay Product Generations

The likelihood of failure and the ability to observe the operational state of a critical protection system, both depends on the technological generation of the relays as well as how long they have been in service. Unlike many other transmission asset groups, protection and control systems have seen dramatic technological changes spanning several generations. During the past 20 years, major functional advances are primarily due to the introduction of microprocessor technology for power system devices such as primary measuring relays, monitoring devices, control systems, and telecommunications equipment.

Modern microprocessor based relays have six significant traits that impact a maintenance strategy:

- Self monitoring capability - the processors can check themselves, peripheral circuits, and some connected substation inputs and outputs such as trip coil continuity. Most relay users are aware that these relays have self monitoring, but are not focusing on exactly what internal functions are actually being monitored. As explained further below, every element critical to the protection system must be monitored, or else verified periodically.
- Ability to capture fault records showing how the protection system responded to a fault in its zone of protection, or to a nearby fault for which it is required not to operate.
- Ability to meter currents and voltages, as well as status of connected circuit breakers, continuously during non-fault times. The relays can compute values such as MW and MVAR line flows that are sometimes used for operational purposes such as SCADA.
- Data communications via ports that provide remote access to all of the results of protection system monitoring, recording, and measurement.
- Ability to trip or close circuit breakers and switches through the protection system outputs, on command from remote data communications messages or from relay front panel button requests.
- Construction from electronic components some of which have shorter technical life or service life than electromechanical components of prior protection system generations.

4. Definitions

Protection System Maintenance Program (PSMP) – An ongoing program by which Protection System components are kept in working order and proper operation of malfunctioning components is restored. A maintenance program for a specific component includes one or more of the following activities:

An ongoing program by which Protection System components are kept in working order and where malfunction components are restored to working order

Verification – A means of determining that the component is functioning correctly.

- **Monitoring** – Observation of the routine in-service operation of the component.
- **Testing** – Application of signals to a component to observe functional performance or output behavior, or to diagnose problems.
- **Inspection** – To detect visible signs of component failure, reduced performance and degradation.
- **Calibration** – Adjustment of the operating threshold or measurement accuracy of a measuring element to meet the intended performance requirement.
- **Upkeep** – Routine activities necessary to assure that the component remains in good working order and implementation of any manufacturer's hardware and software service advisories which are relevant to the application of the device.

- **Restoration** – The actions to restore proper operation of malfunctioning components.

5. Time-Based Maintenance (TBM) Programs

Time-based maintenance is the process in which protection systems are maintained or verified according to a time schedule. The scheduled program often calls for technicians to travel to the physical site and perform a functional test on protection system components. However, some components of a TBM program may be conducted from a remote location - for example, tripping a circuit breaker by communicating a trip command to a microprocessor relay to determine if the entire protection system tripping chain is able to operate the breaker.

Maintenance Practices

Maintenance and testing programs often incorporate the following types of maintenance practices:

- TBM – time-based maintenance – externally prescribed maximum maintenance or testing intervals are applied for components or groups of components. The intervals may have been developed from prior experience or manufacturers' recommendations. The TBM verification interval is based on a variety of factors, including experience of the particular asset owner, collective experiences of several asset owners who are members of a country or regional council, etc. The maintenance intervals are fixed, and may range in number of months or in years.

  TBM can include review of recent power system events near the particular terminal. Operating records may verify that some portion of the protection system has operated correctly since the last test occurred. If specific protection scheme components have demonstrated correct performance within specifications, the maintenance test time clock is reset for those components.

- PBM – performance-based maintenance - intervals are established based on analytical or historical results of TBM failure rates on a statistically significant population of similar components. Some level of TBM is generally followed. Statistical analyses accompanied by adjustments to maintenance intervals are used to justify continued use of PBM-developed extended intervals when test failures or in-service failures occur infrequently.

- CBM – condition-based maintenance – continuously or frequently reported results from non-disruptive self monitoring of components demonstrate operational status as those components remain in service. Whatever is verified by CBM does not require manual testing, but taking advantage of this requires precise technical focus on exactly what parts are included as part of the self diagnostics.

  Microprocessor based protective relays that perform continuous self-monitoring verify correct operation of most components within the device. Self-monitoring capabilities may include the ac signal inputs, analog measuring circuits, processors and memory for measurement, protection, and data communications, trip circuit monitoring, and protection or data communications signals. For those conditions, failure of a self-monitoring routine generates an alarm and may inhibit operation to avoid false trips. When internal components, such as critical output relay contacts, are not equipped with self-monitoring, they can be manually tested. The method of testing may be local or remote, or through inherent performance of the scheme during a system event.

The TBM is the overarching maintenance process of which the other types are subsets. Unlike TBM, PBM intervals are adjusted based on good or bad experiences. The CBM verification intervals can be

hours or even milliseconds between non-disruptive self monitoring checks within or around components as they remain in service.

TBM, PBM, and CBM can be combined for individual components, or within a complete Protection System. The following diagram illustrates the relationship between various types of maintenance practices described in this section. In the Venn diagram the overlapping regions show the relationship of TBM with PBM historical information and the inherent continuous monitoring offered through CBM. This figure shows:

- Region 1: The TBM intervals that are increased based on known reported operational condition of individual components that are monitoring themselves.
- Region 2: The TBM intervals that are adjusted up or down based on results of analysis of maintenance history of statistically significant population of similar products that have been subject to TBM.
- Region 3: Optimal TBM intervals based on regions 1 and 2.

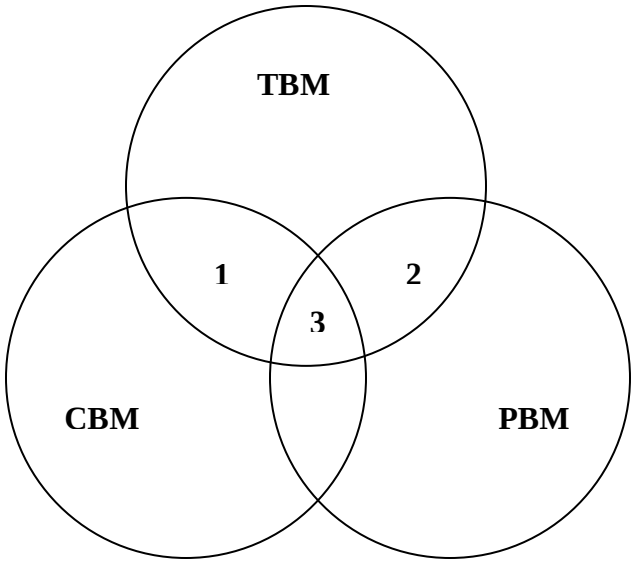

Relationship of time-based maintenance types

5.1 Extending Time-Based Maintenance

All maintenance is fundamentally time-based. Default time-based intervals are commonly established to assure proper functioning of each component of the protection system, when data on the reliability of the components is not available other than observations from time-based maintenance. The following factors may influence the established default intervals:

- If continuous indication of the functional condition of a component is available (from relay self monitoring, for example), the intervals may be extended or manual testing may be eliminated. This is referred to as condition-based maintenance or CBM. CBM is valid only for precisely the components subject to monitoring. In the case of microprocessor-based relays, self-monitoring may not include automated diagnostics of every component within a microprocessor.

- Previous maintenance history for a group of components of a common type may indicate that the maintenance intervals can be extended while still achieving the desired level of performance. This is referred to as performance-based maintenance or PBM. It is also sometimes referred to as reliability-centered maintenance or RCM, but PBM is used in this document.
- Observed proper operation of a component may be regarded as a maintenance verification of the respective component or element in a microprocessor-based device. For such an observation, the maintenance interval may be reset only to the degree that can be verified by data available on the operation. For example, the trip of an electromechanical relay for a fault verifies the trip contact and trip path, but only through the relays in series that actually operated; one operation of this relay cannot verify correct calibration.

Excessive maintenance can actually decrease the reliability of the component or system. It is not unusual to cause failure of a component by removing it from service and restoring it. The improper application of test signals may cause failure of a component. For example, in electromechanical overcurrent relays, test currents have been known to destroy convolution springs.

In addition, maintenance usually takes the component out of service, during which time it is not able to perform its function. Cutout switch failures, or failure to restore switch position, commonly lead to protection failures.

6. Condition-Based Maintenance (CBM) Programs

Condition-based maintenance is the process of gathering and monitoring the information available from modern microprocessor-based relays and other intelligent electronic devices (IEDs) that monitor protection system elements. These relays and IEDs generate monitoring information during normal operation, and the information can be assessed at a convenient location remote from the substation. The information from these relays and IEDs is divided into two basic types:

1. Information can come from background self-monitoring processes, programmed by the manufacturer, or by the user in relay logic settings. The results are presented by alarm contacts or points, front panel indications, and by data communications messages.
2. Information can come from event logs, captured files, and/or oscillograph records for faults and disturbances, metered values, and binary input status reports. Some of these are available on the relay front panel display, but may be available via data communications ports. Large files of fault information can only be retrieved via data communications. These results comprise a mass of data that must be further analyzed for evidence of the operational condition of the protection system.

Using these two types of information, the user can develop an effective maintenance program carried out mostly from a central location remote from the substation. This approach offers the following advantages:

1. Non-invasive Maintenance: The system is kept in its normal operating state, without human intervention for checking. This reduces risk of damage, or risk of leaving the system in an inoperable state after a manual test. Experience has shown that keeping human hands away from equipment known to be working correctly enhances reliability.
2. Virtually Continuous Monitoring: CBM will report many hardware failure problems for repair within seconds or minutes of when they happen. This reduces the percentage of problems that are discovered through incorrect relaying performance. By contrast, a hardware failure discovered by TBM may have been there for much of the time interval between tests, and there is a good chance that some relays will show health problems by incorrect relaying before being caught in the next test round. The frequent or continuous

nature of CBM makes the effective verification interval far shorter than any required TBM maximum interval.

7. Time-Based versus Condition-Based Maintenance

Time-based and condition-based maintenance programs are both acceptable, if implemented according to technically sound requirements. Practical programs can employ a *combination of time-based and condition-based maintenance*. The standard requirements introduce the concept of optionally using condition monitoring as a documented element of a maintenance program.

The Federal Energy Regulatory Commission (FERC), in its Order Number 693 Final Rule dated March 16, 2007 (18 CFR Part 40, Docket No. RM06-16-000) on Mandatory Reliability Standards for the Bulk-Power System, directed NERC to submit a modification to PRC-005-1 that includes a requirement that maintenance and testing of a protection system must be carried out within a maximum allowable interval that is appropriate to the type of the protection system and its impact on the reliability of the Bulk Power System. Accordingly, this Supplementary Reference Paper refers to the specific maximum allowable intervals in PRC-005-2. The defined time limits allow for longer time intervals if the maintained device is monitored.

A key feature of condition-based monitoring is that it effectively reduces the time delay between the moment of a protection failure and time the protection system owner knows about it, for the monitored segments of the protection system. In some cases, the verification is practically continuous - the time interval between verifications is minutes or seconds. Thus, technically sound, condition-based verification (as specified in the header and the "Monitoring Attributes" column of Tables 1b and 1c of PRC-005-2), meets the verification requirements of the FERC order even more effectively than the strictly time-based tests of the same system elements as contained in Table 1a.

The result is that:

This NERC standards permits utilities to use a technically sound approach and to take advantage of remote monitoring, data analysis, and control capabilities of modern protection systems to reduce the need for periodic site visits and invasive testing of components by on-site technicians. This periodic testing must be conducted within maximum time intervals specified in Tables 1a, 1b and 1c of PRC-005-2.

8. Maximum Allowable Verification Intervals

The Maximum Allowable Testing Intervals and Maintenance Activities requirements show how CBM with newer relay types can reduce the need for many of the tests and site visits that older protection systems require. As explained below, there are some sections of the protection system that monitoring or data analysis may not verify. Verifying these sections of the Protection Systems requires some persistent TBM activity in the maintenance program. However, some of this TBM can be carried out remotely - for example, exercising a circuit breaker through the relay tripping circuits using the relay remote control capabilities can be used to verify function of one tripping path and proper trip coil operation, if there has been no fault or routine operation to demonstrate performance of relay tripping circuits.

Maintenance Tests

Periodic maintenance testing is performed to ensure that the protection and control system is operating correctly after a time period of field installation. These tests may be used to ensure that individual components are still operating within acceptable performance parameters - this type of test is needed for components susceptible to degraded or changing characteristics due to aging and wear. Full system

performance tests may be used to confirm that the total protection system functions from measurement of power system values, to properly identifying fault characteristics, to the operation of the interrupting devices.

8.1 Table of Maximum Allowable Verification Intervals

Table 1, in the standard, specifies maximum allowable verification intervals for various generations of protection systems and categories of equipment that comprise protection systems. The right column indicates maintenance activities required for each category.

The types of components are illustrated in Figures 1 and 2 at the end of this paper. Figure 1 shows an example of telecommunications-assisted line protection system comprising substation equipment at each terminal and a telecommunications channel for relaying between the two substations. Figure 2 shows a typical Generation station layout. The various subsystems of a Protection System that need to be verified are shown. UFLS, UVLS, and SPS are additional categories of Table 1 that are not illustrated in these Figures.

While it is easy to associate protective relays to the three levels of monitoring, it is also true that most of the components that can make up a Protection System can also have technological advancements that place them into higher levels of monitoring.

To use the Maintenance Activities and Intervals Tables (Tables 1a, 1b and 1c collectively *Tables*) from PRC-005-2:

- First check the table header description to verify that your equipment meets the monitoring requirements. If your equipment does not meet the monitoring requirements of Table 1c then check Table 1b. If your equipment does not meet the requirements of Table 1b then use Table 1a.
- If you find a piece of equipment that meets the monitoring requirements of Table 1b or 1c then you can take advantage of the extended time intervals allowed by Table 1b and 1c. Your maintenance plan must document that this component can be maintained by the requirements of Table 1b or 1c because it has the necessary attributes required within that Table.
- Once you determine which table applies to your equipment's monitoring requirements then check the Maintenance Activity that is required for that particular component. This Maintenance Activity is the minimum maintenance activity that must be documented.
- If your PSMP (plan) requires more then you must document more.
- After the maintenance activity is known, check the Maximum Maintenance Interval; this time is the maximum time allowed between hands-on maintenance activity cycles of this component.
- If your PSMP (plan) requires activities more often than the Tables maximum then you must document those activities more often.
- Any given set of Protection System equipment can be maintained with any combination of Tables 1a, 1b and 1c. An entity does not have to stick to Table 1a just because some of its equipment is un-monitored.
- An entity does not have to utilize the extended time intervals in Tables 1b or 1c. An easy choice to make is to simply utilize Table 1a. While the maintenance activities resulting from choosing to use only Table 1a would require more maintenance man-hours, the maintenance requirements may be simpler to document and the resulting maintenance plans may be easier to create.

For each Protection System component, Table 1 shows maximum allowable testing intervals for unmonitored, partially monitored and fully monitored protection systems:

Table 1 Maximum Allowable Testing Intervals and Maintenance Activities

Level 1 Monitoring (Unmonitored) Table 1a

This table applies to electromechanical, analog solid state and other un-monitored Protection Systems components. This table represents the starting point for all required maintenance activities. The object of this group of requirements is to have specific activities accomplished at maximum set time intervals. From this group of activities it follows that CBM or PBM can increase the time intervals between the hands-on maintenance actions.

Level 2 Monitoring (Partially Monitored) Table 1b

This table applies to microprocessor relays and other associated Protection System components whose self-monitoring alarms are transmitted to a location (at least daily) where action can be taken for alarmed failures. The attributes of the monitoring system must meet the requirements specified in the header of the Table 1b. Given these advanced monitoring capabilities, it is known that there are specific and routine testing functions occurring within the device. Because of this ongoing monitoring hands-on action is required less often because routine testing is automated. However, there is now an additional task that must be accomplished during the hands-on process – the monitoring and alarming functions must be shown to work.

Level 3 Monitoring (Fully Monitored) Table 1c

This table applies to microprocessor relays and other associated Protection System components in which every element or function required for correct operation of the Protection System component is monitored continuously and verified, including verification of the means by which failure alarms or indicators are transmitted to a location within 1 hour or less of the maintenance-correctable issue occurring. This is the highest level of monitoring and if it is available then this gives an entity the ability to have continuous testing of their (Level 3 Monitored) Protection System Component and thus does not have to manually intervene to accomplish routine testing chores. Level 3 Fully Monitored yields continuous monitoring advantages but has substantial technical hurdles that must be overcome; namely that monitoring also verifies the failure of the monitoring and alarming equipment. Without this important ingredient a device that is thought to be continuously monitored could be in an alarm state without the asset owner being aware of this alarm state.

Additional Notes for Table 1a, Table 1b, and Table 1c

1. For electro-mechanical relays, adjustment is required to bring measurement accuracy within the tolerance needed by the asset owner. Microprocessor-relays with no remote monitoring of alarm contacts, etc, are un-monitored relays and need to be verified within the Table interval as other un-monitored relays but may be verified as functional by means other than testing by simulated inputs.
2. Microprocessor relays typically are specified by manufacturers as not requiring calibration, but acceptable measurement of power system input values must be verified (verification of the Analog to Digital [A/D] converters) within the Table intervals. The integrity of the digital inputs and outputs must be verified within the Table intervals.
3. Any Phasor Measurement Unit (PMU) function whose output is used in a protection system or SPS (as opposed to a monitoring task) must be verified as a component in a protection system.
4. In addition to verifying the circuitry that supplies dc to the protection system, the owner must maintain the station dc supply. The most widespread station dc supply is the station battery and charger. Unlike most Protection System elements physical inspection of station batteries for

signs of component failure, reduced performance, and degradation are required to ensure that the station battery is reliable enough to deliver dc power when required. IEEE Standards 450, 1188, and 1106 for Vented Lead-Acid, Valve-Regulated Lead-Acid, and Nickel-Cadmium batteries, respectively (which are the most commonly used substation batteries on the NERC BES) have been developed as an important reference source of maintenance recommendations. The Protection System owner might use the applicable IEEE recommended practice which contains information and recommendations concerning the maintenance, testing and replacement of its substation battery. However, the methods prescribed in these IEEE recommendations cannot be specifically required because they do not apply to all battery applications.

5. Aggregated small entities might distribute the testing of the population of UFLS/UVLS systems, and large entities will usually maintain a portion of these systems in any given year. Additionally, if relatively small quantities of such systems do not perform properly, it will not affect the integrity of the overall program.
6. Voltage & Current Sensing Device circuit input connections to the protection system relays can be verified by comparison of measured values on live circuits or by using test currents and voltages on equipment out of service for maintenance. The verification process can be automated or manual. The values should be verified to be as expected, (phase value and phase relationships are both equally important to verify).
7. Verify the protection system tripping function by performing an operational trip test on all components contained in the trip circuit. This includes circuit breaker or circuit switcher trip coils, auxiliary tripping relays (94), lock-out relays (86), and communications-assisted trip scheme elements. Each control circuit path that carries trip signal must be verified, although each path must be checked only once. A maintenance program may include performing an overall test for the entire system at one time, or several split system tests with overlapping trip verification. A documented real-time trip of any given trip path is acceptable in lieu of a functional trip test.
8. "End-to-end test" as used in this supplementary reference is any testing procedure that creates a remote input to the local communications-assisted trip scheme. While this can be interpreted as a GPS-type functional test it is not limited to testing via GPS. Any remote scheme manipulation that can cause action at the local trip path can be used to functionally-test the dc Control Circuitry. A documented real-time trip of any given trip path is acceptable in lieu of a functional trip test. It is possible, with sufficient monitoring, to be able to verify each and every parallel trip path that participated in any given dc Control Circuit trip. Or, another possible solution is that a single trip path from a single monitored relay can be verified to be the trip path that successfully tripped during a real-time operation. The variations are only limited by the degree of engineering and monitoring that an entity desires to pursue.
9. A/D verification may use relay front panel value displays, or values gathered via data communications. Groupings of other measurements (such as vector summation of bus feeder currents) can be used for comparison if calibration requirements assure acceptable measurement of power system input values.
10. Notes 1-9 attempt to describe the testing activities they do not represent the only methods to achieve these activities but rather some possible methods.

8.2 Retention of Records

PRC-005-1 describes a reporting or auditing cycle of one year and retention of records for three years. However, with a three year retention cycle, the records of verification for a protection system will typically be discarded before the next verification, leaving no record of what was done if a Misoperation or failure is to be analyzed.

PRC-005-2 corrects this by requiring:

The Transmission Owner, Generator Owner, and Distribution Provider shall each retain documentation of the two most recent performances of each distinct maintenance activity for the Protection System components, or to the previous on-site audit date, whichever is longer.

This requirement assures that the documentation shows that the interval between maintenance cycles correctly meets the maintenance interval limits.

8.3 Basis for Table 1 Intervals

SPCTF authors collected all available data from Regional Entities (REs) on time intervals recommended for maintenance and test programs. The recommendations vary widely in categorization of relays, defined maintenance actions, and time intervals, precluding development of intervals by averaging. SPCTF also reviewed the 2005 Report [2] of the IEEE Power System Relaying Committee Working Group I-17 (Transmission Relay System Performance Comparison). Review of the I-17 report shows data from a small number of utilities, with no company identification or means of investigating the significance of particular results.

To develop a solid current base of practice, SPCTF surveyed its members regarding their maintenance intervals for electromechanical and microprocessor relays, and asked the members to also provide definitively-known data for other entities. The survey represented 470 GW of peak load, or 64% of the NERC peak load. Maintenance interval averages were compiled by weighting reported intervals according to the size (based on peak load) of the reporting utility. Thus, the averages more accurately represent practices for the large populations of protection systems used across the NERC regions.

The results of this survey with weighted averaging indicate maintenance intervals of 5 years for electromechanical or solid state relays, and 7 years for un-monitored microprocessor relays.

A number of utilities have extended maintenance intervals for microprocessor relays beyond 7 years, based on favorable experience with the particular products they have installed. To provide a technical basis for such extension, SPCTF authors developed a recommendation of 10 years using the Markov modeling approach from [1] as summarized in Section 8.4. The results of this modeling depend on the completeness of self-testing or monitoring. Accordingly, this extended interval is allowed by Table 1 only when such relays are monitored as specified in the header of Table 1b. Monitoring is capable of reporting protection system health issues that are likely to affect performance within the 10 year time interval between verifications.

It is important to note that, according to modeling results, protection system availability barely changes as the maintenance interval is varied below the 10-year mark. Thus, reducing the maintenance interval does not improve protection system availability. With the assumptions of the model regarding how maintenance is carried out, reducing the maintenance interval actually degrades protection system availability.

8.4 Basis for Extended Maintenance Intervals for Microprocessor Relays

Table 1 allows maximum verification intervals that are extended based on monitoring level. The industry has experience with self-monitoring microprocessor relays that leads to the Table 1 value for partial monitoring as explained in Section 8.3. To develop a basis for the maximum interval for monitored relays in their *Protection System Maintenance – A Technical Reference*, the SPCTF used the methodology of Reference [1], which specifically addresses optimum routine maintenance intervals. The Markov modeling approach of [1] is judged to be valid for the design and typical failure modes of microprocessor relays.

The SPCTF authors ran test cases of the Markov model to calculate two key probability measures:

- Relay Unavailability - the probability that the relay is out of service due to failure or maintenance activity while the power system element to be protected is in service.
- Abnormal Unavailability - the probability that the relay is out of service due to failure or maintenance activity when a fault occurs, leading to failure to operate for the fault.

The parameter in the Markov model that defines self-monitoring capability is ST (for self test). ST = 0 if there is no self-monitoring; ST = 1 for full monitoring. Practical ST values are estimated to range from .75 to .95. The SPCTF simulation runs used constants in the Markov model that were the same as those used in [1] with the following exceptions:

Sn, Normal tripping operations per hour = 21600 (reciprocal of normal fault clearing time of 10 cycles)

Sb, Backup tripping operations per hour = 4320 (reciprocal of backup fault clearing time of 50 cycles)

Rc, Protected component repairs per hour = 0.125 (8 hours to restore the power system)

Rt, Relay routine tests per hour = 0.125 (8 hours to test a protection system)

Rr, Relay repairs per hour = 0.08333 (12 hours to complete a protection system repair after failure)

Experimental runs of the model showed low sensitivity of optimum maintenance interval to these parameter adjustments.

The resulting curves for Relay Unavailability and Abnormal Unavailability versus maintenance interval showed a broad minimum (optimum maintenance interval) in the vicinity of 10 years – the curve is flat, with no significant change in either unavailability value over the range of 9, 10, or 11 years. This was true even for a relay Mean Time between Failures (MTBF) of 50 years, much lower than MTBF values typically published for these relays. Also, the Markov modeling indicates that both the relay unavailability and abnormal unavailability actually become higher with more frequent testing. This shows that the time spent on these more frequent tests yields no failure discoveries that approach the negative impact of removing the relays from service and running the tests.

PSMT SDT further notes that the SPCTF also allowed 25% extensions to the “maximum time intervals”. With a 5 year time interval established between manual maintenance activities and a 25% time extension then this equates to a 6.25 year maximum time interval. It is the belief of the PSMT SDT that the SPCTF understood that 6.25 years was thereby an adequate maximum time interval between manual maintenance activities. The PSMT SDT has followed the FERC directive for a *maximum* time interval and has determined that no extensions will be allowed. Six years has been set for the maximum time interval between manual maintenance activities. This maximum time interval also works well for maintenance cycles that have been in use in generator plants for decades.

For monitored relays, the PSMT SDT notes that the SPCTF called for 10 years as the interval between maintenance activities. A 10 year interval with a 25% allowed extension equates to a maximum allowed interval of 12.5 years between manual maintenance activities. The Standard does not allow extensions on any component of the protection system; thus the maximum allowed interval for these devices has been set to12 years. Twelve years also fits well into the traditional maintenance cycles of both substations and generator plants.

Also of note is the Table’s use of the term “Calendar” in the column for “Maximum Maintenance Interval”. The PSMT SDT deemed it necessary to include the term “Calendar” to facilitate annual maintenance planning, scheduling and implementation. This need is the result of known occurrences of

system requirements that could cause maintenance schedules to be missed by a few days or weeks. The PSMT SDT chose the term "Calendar" to preclude the need to have schedules be met to the day. An electro-mechanical protective relay that is maintained in year #1 need not be revisited until 6 years later (year #7). For example: a relay was maintained April 10, 2008; maintenance would need to be completed no later than December 31, 2014.
Section 9 describes a performance-based maintenance process which can be used to justify maintenance intervals other than those described in Table 1.

Section 10 describes sections of the protection system, and overlapping considerations for full verification of the protection system by segments. Segments refer to pieces of the protection system, which can range from a single device to a panel to an entire substation.

Section 11 describes how relay operating records can serve as a basis for verification, reducing the frequency of manual testing.

Section 13 describes how a cooperative effort of relay manufacturers and protection system users can improve the coverage of self-monitoring functions, leading to full monitoring of the bulk of the protection system, and eventual elimination of manual verification or testing.

9. Performance-Based Maintenance Process

In lieu of using the Table 1 intervals, a performance-based maintenance process may be used to establish maintenance intervals (*PRC-005 Attachment A Criteria for a Performance-Based Protection System Maintenance Program*). A performance-based maintenance process may justify longer maintenance intervals, or require shorter intervals relative to Table 1. In order to use a performance-based maintenance process, the documented maintenance program must include records of repairs, adjustments, and corrections to covered protection systems in order to provide historical justification for intervals other than those established in Table 1. Furthermore, the asset owner must regularly analyze these records of corrective actions to develop a ranking of causes. Recurrent problems are to be highlighted, and remedial action plans are to be documented to mitigate or eliminate recurrent problems.

Utilities with performance-based maintenance track performance of protection systems, demonstrate how they analyze findings of performance failures and aberrations, and implement continuous improvement actions. Since no maintenance program can ever guarantee that no malfunction can possibly occur, documentation of a performance-based maintenance program would serve the utility well in explaining to regulators and the public a Misoperation leading to a major system outage event.

A performance-based maintenance program requires auditing processes like those included in widely used industrial quality systems (such as ***ISO 9001-2000, Quality management systems — Requirements;*** or applicable parts of the NIST Baldridge National Quality Program). The audits periodically evaluate:

- The completeness of the documented maintenance process
- Organizational knowledge of and adherence to the process
- Performance metrics and documentation of results
- Remediation of issues
- Demonstration of continuous improvement.

In order to opt into a Performance-based Maintenance (PBM) program the asset owner must first sort the various Protection System components into population segments. Any population segment must be comprised of at least 60 individual units; if any asset owner opts for PBM but does not own 60 units to comprise a population then that asset owner may combine data from other asset owners until the needed 60 units is aggregated. Each population segment must be composed of like devices from the same manufacturer and subjected to similar environmental factors. For example: One segment cannot be

comprised of both GE & Westinghouse electro-mechanical lock-out relays; likewise, one segment cannot be comprised of 60 GE lock-out relays, 30 of which are in a dirty environment and the remaining 30 from a clean environment.

9.1 Minimum Sample Size

Large Sample Size

An assumption that needs to be made when choosing a sample size is "the sampling distribution of the sample mean can be approximated by a normal probability distribution." The Central Limit Theorem states: "In selecting simple random samples of size *n* from a population, the sampling distribution of the sample mean *x* can be approximated by a normal probability distribution as the sample size becomes large." (Essentials of Statistics for Business and Economics, Anderson, Sweeney, Williams, 2003)

To use the Central Limit Theorem in statistics, the population size should be large. The references below are supplied to help define what is large.

> "… whenever we are using a large simple random sample (rule of thumb: n>=30), the central limit theorem enables us to conclude that the sampling distribution of the sample mean can be approximated by a normal distribution." (Essentials of Statistics for Business and Economics, Anderson, Sweeney, Williams, 2003)
>
> "If samples of size n, when n>=30, are drawn from any population with a mean *u* and a standard deviation σ, the sampling distribution of sample means approximates a normal distribution. The greater the sample size, the better the approximation." (Elementary Statistics - Picturing the World, Larson, Farber, 2003)
>
> "The sample size is large (generally n>=30)… (Introduction to Statistics and Data Analysis - Second Edition, Peck, Olson, Devore, 2005)
>
> "… the normal is often used as an approximation to the *t* distribution in a test of a null hypothesis about the mean of a normally distributed population when the population variance is estimated from a relatively large sample. A sample size exceeding 30 is often given as a minimal size in this connection." (Statistical Analysis for Business Decisions, Peters, Summers, 1968)

Error of Distribution Formula

Beyond the large sample size discussion above, a sample size requirement can be estimated using the bound on the Error of Distribution Formula when the expected result is of a "Pass/Fail" format and will be between 0 and 1.0.

The Error of Distribution Formula is:

$$B = z\sqrt{\frac{\pi(1-\pi)}{n}}$$

Where:

B = bound on the error of distribution (allowable error)
z = standard error
π = expected failure rate
n = sample size required

Solving for n provides:

$$n = \pi(1-\pi)\left(\frac{z}{B}\right)^2$$

Minimum Population Size to use Performance-based Program

One entity's population of components should be large enough to represent a sizeable sample of a vendor's overall population of manufactured devices. For this reason the following assumptions are made:

B = 5%
z = 1.96 (This equates to a 95% confidence level)
π = 4%

Using the equation above, n=59.0.

Minimum Sample Size to evaluate Performance-based Program

The number of components that should be included in a sample size for evaluation of the appropriate testing interval can be smaller because a lower confidence level is acceptable since the sample testing is repeated or updated annually. For this reason, the following assumptions are made:

B = 5%
z = 1.44 (85% confidence level)
π = 4%

Using the equation above, n=31.8.

Recommendation

Based on the above discussion, a sample size should be at least 30 to allow use of the equation mentioned. Using this and the results of the equation, the following numbers are recommended:

Minimum Population Size to use Performance-based Maintenance Program = 60

Minimum Sample Size to evaluate Performance-based Program = 30.

Once the population segment is defined then maintenance must begin within the intervals as outlined for Level 1 monitoring, (Table 1a). Time intervals can be lengthened provided the last year's worth of devices tested (or the last 30 units maintained, whichever is more) had fewer than 4% countable events. It is notable that 4% is specifically chosen because an entity with a small population (60 units) would have to adjust its time intervals between maintenance if more than 1 countable event was found to have occurred during the last analysis period. A smaller percentage would require that entity to adjust the time

interval between maintenance activities if even one unit is found out of tolerance or causes a mis-operation.

The minimum number of units that can be tested in any given year is 5% of the population. Note that this 5% threshold sets a practical limitation on total length of time between intervals at 20 years.

If at any time the number of countable events equals or exceeds 4% of the last year's tested-devices (or the last 30 units maintained, whichever is more) then the time period between manual maintenance activities must be decreased. There is a time limit on reaching the decreased time at which the countable events is less than 4%; this must be attained within three years.

This additional time period of three years to restore segment performance to <4% countable events is mandated to keep entities from "gaming the PBM system". It is believed that this requirement provides the economic disincentives to discourage asset owners from arbitrarily pushing the PBM time intervals out to up to 20 years without proper statistical data.

10. Overlapping the Verification of Sections of the Protection System

Table 1 requires that every protection system element be periodically verified. One approach is to test the entire protection scheme as a unit, from voltage and current sources to breaker tripping. For practical ongoing verification, sections of the protection system may be tested or monitored individually. The boundaries of the verified sections must overlap to ensure that there are no gaps in the verification. See Appendix A for additional discussion on this topic.

All of the methodologies expressed within this report may be combined by an entity, as appropriate, to establish and operate a maintenance program. For example, a protection system may be divided into multiple overlapping sections with a different maintenance methodology for each section:

- Time-based maintenance with appropriate maximum verification intervals for categories of equipment as given in the Unmonitored, Partially Monitored, or Fully Monitored Tables;
- Full monitoring as described in header of Table 1c;
- A performance-based maintenance program as described in Section 9;
- Opportunistic verification using analysis of fault records as described in Section 11

11. Monitoring by Analysis of Fault Records

Many users of microprocessor relays retrieve fault event records and oscillographic records by data communications after a fault. They analyze the data closely if there has been an apparent Misoperation, as NERC standards require. Some advanced users have commissioned automatic fault record processing systems that gather and archive the data. They search for evidence of component failures or setting problems hidden behind an operation whose overall outcome seems to be correct. The relay data may be augmented with independently captured digital fault recorder (DFR) data retrieved for the same event.

Fault data analysis comprises a legitimate CBM program that is capable of reducing the need for a manual time-interval based check on protection systems whose operations are analyzed. Even electromechanical protection systems instrumented with DFR channels may achieve some CBM benefit. The completeness of the verification then depends on the number and variety of faults in the vicinity of the relay that produce relay response records, and the specific data captured.

A typical fault record will verify particular parts of certain protection systems in the vicinity of the fault. For a given protection system installation, it may or may not be possible to gather within a reasonable amount of time an ensemble of internal and external fault records that completely verify the protection system.

For example, fault records may verify that the particular relays that tripped are able to trip via the control circuit path that was specifically used to clear that fault. A relay or DFR record may indicate correct operation of the protection communications channel. Furthermore, other nearby protection systems may verify that they restrain from tripping for a fault just outside their respective zones of protection. The ensemble of internal fault and nearby external fault event data can verify major portions of the protection system, and reset the time clock for the Table 1 testing intervals for the verified components only.

What can be shown from the records of one operation is very specific and limited. In a panel with multiple relays, only the specific relay(s) whose operation can be observed without ambiguity in the record and the associated wiring paths are verified. Be careful about using fault response data to verify that settings or calibration are correct. Unless records have been captured for multiple faults close to either side of a setting boundary, setting or calibration could still be incorrect.

If fault record data is used to show that portions or all of a protection system have been verified to meet Table 1 requirements, the owner must retain the fault records used, and the maintenance related conclusions drawn from this data and used to defer Table 1 tests, for at least the retention time interval given in Section 8.2.

12. Importance of Relay Settings in Maintenance Programs

In manual testing programs, many utilities depend on pickup value or zone boundary tests to show that the relays have correct settings and calibration. Microprocessor relays, by contrast, provide the means for continuously monitoring measurement accuracy. Furthermore, the relay digitizes inputs from one set of signals to perform all measurement functions in a single self-monitoring microprocessor system. These relays do not require testing or calibration of each setting.

However, incorrect settings may be a bigger risk with microprocessor relays than with older relays. Some microprocessor relays have hundreds or thousands of settings, many of which are critical to protection system performance.

Monitoring does not check measuring element settings. Analysis of fault records may or may not reveal setting problems. To minimize risk of setting errors after commissioning, the user should enforce strict settings data base management, with reconfirmation (manual or automatic) that the installed settings are correct whenever maintenance activity might have changed them. For background and guidance, see [5].

Table 1 requires that settings must be verified to be as specified. The reason for this requirement is simple. With legacy relays (non-microprocessor protective relays) it is necessary to know the value of the intended setting in order to test, adjust and calibrate the relay. Proving that the relay works per specified setting was the de facto procedure. However, with the advanced microprocessor relays it is possible to change relay settings for the purpose of verifying specific functions and then neglect to return the settings to the specified values. While there is no specific requirement to maintain a settings management process there remains a need to verify that the settings left in the relay are the intended, specified settings. This need may manifest itself after any of the following:

- One or more settings are changed for any reason.
- A relay fails and is repaired or replaced with another unit.
- A relay is upgraded with a new firmware version.

13. Self-Monitoring Capabilities and Limitations

Microprocessor relay proponents have cited the self-monitoring capabilities of these products for nearly 20 years. Theoretically, any element that is monitored does not need a periodic manual test. A problem today is that the community of manufacturers and users has not created clear documentation of exactly what is and is not monitored. Some unmonitored but critical elements are buried in installed systems that are described as self-monitoring.

Until users are able to document how all parts of a system which are required for the protective functions are monitored or verified (with help from manufacturers), they must continue with the unmonitored or partially monitored intervals established in Table 1.

Going forward, manufacturers and users can develop mappings of the monitoring within relays, and monitoring coverage by the relay of user circuits connected to the relay terminals.

To enable the use of full monitoring, the manufacturers of the microprocessor-based self-monitoring components in the protection system should publish for the user a document or map that shows:

- How all internal elements of the product are monitored for any failure that could impact protection system performance.
- Which connected circuits are monitored by checks implemented within the product; how to connect and set the product to assure monitoring of these connected circuits; and what circuits or potential problems are not monitored.

With this information in hand, the user can document full monitoring for some or all sections by:

- Presenting or referencing the product manufacturer's documents.
- Explaining in a system design document the mapping of how every component and circuit that is critical to protection is monitored by the microprocessor product(s) or by other design features.
- Extending the monitoring to include the alarm transmission facilities through which failures are reported within a given time frame to allocate where action can be taken to initiate resolution of the alarm attributed to a maintenance correctable issue, so that failures of monitoring or alarming systems also lead to alarms and action.
- Documenting the plans for verification of any unmonitored elements according to the requirements of Table 1.

14. Notification of Protection System Failures

When a failure occurs in a protection system, power system security may be compromised, and notification of the failure must be conducted in accordance with relevant NERC standard(s). Knowledge of the failure may impact the system operator's decisions on acceptable loading conditions.

This formal reporting of the failure and repair status to the system operator by the protection system owner also encourages the system owner to execute repairs as rapidly as possible. In some cases, a microprocessor relay or carrier set can be replaced in hours; wiring termination failures may be repaired in a similar time frame. On the other hand, a component in an electromechanical or early-generation electronic relay may be difficult to find and may hold up repair for weeks. In some situations, the owner may have to resort to a temporary protection panel, or complete panel replacement.

15. Maintenance Activities

Some specific maintenance activities are a requirement to ensure reliability. An example would be that a BES entity could be prudent in its protective relay maintenance but if its battery maintenance program is lacking then reliability could still suffer. The NERC glossary outlines a Protection System as containing specific components. PRC-005-02 requires specific maintenance activities be accomplished within a specific time interval. As noted previously, higher technology equipment can contain integral monitoring capability that actually performs maintenance verification activities routinely and often; therefore *manual intervention* to perform certain activities on these type devices may not be needed.

15.1 Protective Relays

These relays are defined as the devices that receive the input signal from the current and voltage sensing devices and are used to isolate a faulted portion of the BES. Devices that sense thermal, vibration, seismic, pressure, gas or any other non-electrical inputs are excluded.

Non-microprocessor based equipment is treated differently than microprocessor based equipment in the following ways, the relays should meet the asset owners' tolerances.

- Non-microprocessor devices must be tested with voltage and/or current applied to the device.
- Microprocessor devices may be tested through the integral testing of the device.
    - There is no specific protective relay commissioning test or relay routine test mandated.
    - There is no specific documentation mandated.

15.2 Voltage & Current Sensing Devices

These are the current and voltage sensing devices, usually known as instrument transformers. There is presently a technology available (fiber-optic Hall-effect) that does not utilize conventional transformer technology; these devices and other technologies that produce quantities that represent the primary values of voltage and current are considered to be a type of voltage and current sensing devices included in this standard.

The intent of the maintenance activity is to verify the input to the protective relay from the device that produces the current or voltage signal sample.

There is no specific test mandated for these devices. The important thing about these signals is to know that the expected output from these devices actually reaches the protective relay. Therefore, the proof of the proper operation of these devices also demonstrates the integrity of the wiring (or other medium used to convey the signal) from the current and voltage sensing device all the way to the protective relay. The following observations apply.

- There is no specific ratio test, routine test or commissioning test mandated.
- There is no specific documentation mandated.
- It is required that the signal be present at the relay.
- This expectation can be arrived at from any of a number of means; by calculation, by comparison to other circuits, by commissioning tests, by thorough inspection, or by any means needed to verify the circuit meets the asset owner's protection system maintenance program.
- An example of testing might be a saturation test of a CT with the test values applied at the relay panel; this therefore tests the CT as well as the wiring from the relay all the back to the CT.
- Another possible test is to measure the signal from the voltage and/or current sensing devices, during load conditions, at the input to the relay.

- Another example of testing the various voltage and/or current sensing devices is to query the microprocessor relay for the real-time loading; this can then be compared to other devices to verify the quantities applied to this relay. Since the input devices have supplied the proper values to the protective relay then the verification activity has been satisfied. Thus event reports (and oscillographs) can be used to verify that the voltage and current sensing devices are performing satisfactorily.
- Still another method is to measure total watts and vars around the entire bus; this should add up to zero watts and zero vars thus proving the voltage and/or current sensing devices system throughout the bus.
- Another method for proving the voltage and/or current sensing devices is to complete commissioning tests on all of the transformers, cabling, fuses and wiring.
- Other methods that provide documentation that the expected transformer values as applied to the inputs to the protective relays are acceptable.

15.3 DC Control Circuitry

This component of Protection Systems includes the trip coil(s) of the circuit breaker, circuit switcher or any other interrupting device. It includes the wiring from the batteries to the relays. It includes the wiring (or other signal conveyance) from every trip output to every trip coil. It includes any device needed for the correct processing of the needed trip signal to the trip coil of the interrupting device. In short, every trip path must be verified; the method of verification is optional to the asset owner. An example of testing methods to accomplish this might be to verify, with a volt-meter, the existence of the proper voltage at the open contacts and at the trip coil(s). As every parallel trip path has similar failure modes, each trip path from relay to trip coil must be verified. Each trip coil must be tested to trip the circuit breaker (or other interrupting device) at least once. There is a requirement to operate the circuit breaker (or other interrupting device) at least once every six years as part of the complete functional test. If a monitoring system is installed that verifies every parallel trip path then the manual-intervention testing of those parallel trip paths can be extended to twelve years, however the actual operation of the circuit breaker must still occur at least once every six years. This 6-year tripping requirement can be completed as easily as tracking the real-time fault-clearing operations on the circuit breaker.

The circuit-interrupting device should not be confused with a motor-operated disconnect. The intent of this standard is to require maintenance intervals and activities on Protection Systems equipment and not just all equipment.
It is necessary, however, to classify a device that actuates a high-speed auto-closing ground switch as an interrupting device if this ground switch is utilized in a Protection System and forces a ground fault to occur that then results in an expected Protection System operation to clear the forced ground fault.

Distribution circuit breakers that participate in the UFLS scheme are excluded from the trip-testing requirements. There are many circuit interrupting devices in the distribution system that will be operating for any given under-frequency event that requires tripping for that event. A failure in the tripping-action of a single distribution breaker will be far less significant than, for example, any single Transmission Protection System failure such as a failure of a Bus Differential Lock-Out Relay. While many failures of these distribution breakers could add up to be significant, it is also believed that distribution breakers are operated often on just fault clearing duty and therefore the distribution circuit breakers are operated at least as frequently as any requirements that might have appeared in this standard.

The dc control circuitry also includes each auxiliary tripping relay (94) and each lock-out relay (86) in any given trip scheme. These electro-mechanical devices must be trip tested. The PSMT SDT considers these devices to share some similarities in failure modes as electro-mechanical protective relays; as such there is a six year maximum interval between mandated maintenance tasks.

When verifying the operation of the 94 and 86 relays each normally-open contact that closes to pass a trip signal must be verified as operating correctly. Normally-open contacts that are not used to pass a trip signal and normally-closed contacts do not have to be verified. Verification of the tripping paths is the requirement.
New technology is also accommodated here; there are some tripping systems that have replaced the traditional hard-wired trip circuitry with other methods of trip-signal conveyance such as fiber-optics. It is the intent of the PSMT SDT to include this, and any other, technology that is used to convey a trip signal from a protective relay to a circuit breaker (or other interrupting device) within this category of equipment.

15.4 Batteries and DC Supplies

IEEE guidelines were consulted to arrive at the maintenance activities for batteries. The following guidelines were used: IEEE 450 (for Vented Lead-Acid batteries), IEEE 1188 (for Valve-Regulated Lead-Acid batteries) and IEEE 1106 (for Nickel-Cadmium batteries).

The present NERC definition of a Protection System is "*protective relays, associated communication systems, voltage and current sensing devices, station batteries and dc control circuitry*." The station battery is not the only component that provides dc power to a Protection System. In the new definition for Protection System "station batteries" are replaced with "station dc supply" to make the battery charger and dc producing stored energy devices (that are not a battery) part of the Protection System that must be maintained.

The PSMT SDT recognizes that there are several technological advances in equipment and testing procedures that allow the owner to choose how to verify that a battery string is free of open circuits. The term "continuity" was introduced into the standard to allow the owner to choose how to verify continuity of a battery set by various methods, and not to limit the owner to the two methods recommended in the IEEE standards. Continuity as used in Table 1 of the standard refers to verifying that there is a continuous current path from the positive terminal of the station battery set to the negative terminal. Without verifying continuity of a station battery, there is no way to determine that the station battery is available to supply dc power to the station.

Batteries cannot be a unique population segment of a Performance-based Maintenance Program (PBM) because there are too many variables in the electro-chemical process to completely isolate all of the performance-changing criteria necessary for using PBM on battery systems.

15.5 Tele-protection equipment

This is also known as associated telecommunications equipment. The equipment used for tripping in a communications assisted trip scheme is a vital piece of the trip circuit. Remote action causing a local trip can be thought of as another parallel trip path to the trip coil that must be tested.

Besides the trip output and wiring to the trip coil(s) there is also a communications medium that must be maintained.

Newer technologies now exist that achieve communications-assisted tripping without the conventional wiring practices of older technology.

For example: older technologies may have included *Frequency Shift Key* methods. This technology requires that guard and trip levels be maintained.

The actual tripping path(s) to the trip coil(s) may be tested as a parallel trip path within the dc control circuitry tests.

Emerging technologies transfer digital information over a variety of carrier mediums that are then interpreted locally as trip signals.

The requirements apply to the communicated signal needed for the proper operation of the protective relay trip logic or scheme. Therefore this standard is applied to equipment used to convey both trip signals and block signals.

It was the intent of this standard to require that a test be made of any communications-assisted trip scheme regardless of the vintage of the technology. The essential element is that the tripping occurs locally when the remote action has been asserted.

Evidence of operational test or documentation of measurement of signal level, reflected power or data-error rates is needed.

Some newer installations utilize digital signals over fiber-optics from the protective relays in the control house to the circuit interrupting device in the yard. This method of tripping the circuit breaker, even though it might be considered communications, must be maintained per the dc control circuitry maintenance requirements.

15.6 Examples of Evidence of Compliance

To comply with the requirements of this Standard an entity will have to document and save evidence. The evidence can be of many different forms. The Standard Drafting Team recognizes that there are concurrent evidence requirements of other standards that could, at times fulfill evidence requirements of this standard.

For example: maintaining evidence for operation of Special Protection Systems could concurrently be utilized as proof of the operation of the associated trip coil (provided one can be certain of the trip coil involved). Thus the reporting requirements that one may have to do for the misoperation of a Special Protection Scheme under PRC-016 could work for the activity tracking requirements under this PRC-005-2.

Another example might be:
Some entities maintain records of all interruptions. These records can be concurrently utilized, if the entity desires, as DC Trip Path verifications.

Analysis of Event Recordings can provide details that can eliminate some hands-on maintenance activities; however, merely printing out the event report provides limited benefit of verification of specific maintenance items.
Standardized-forms, hard or soft copy, can be created, filled out and archived. These forms can be of the entities' design and can be aimed at answering the specific requirements of the Standard as well as additional requirements as needed by the entity.
Fill-in blanks, check-boxes, drop-down lists, auto-date formats, etc. can all be used as the primary action is the maintenance activity; the secondary action is to verify that the maintenance activity was performed.
Other evidence of compliance might be, but is not limited to:

Prints, maintenance plans, training materials, policies, procedures, data print-outs or exhibits, correspondence, reports, data-base records, etc.
There is the legacy method of paper trail for everything, this is acceptable. There are also paperless systems existing and evolving that are also acceptable.
Proof of compliance should simply be the entities' records of maintenance completed.

16. References

NERC/SPCTF/Relay_Maintenance_Tech_Ref_approved_by_PC.pdf

1. "Predicating The Optimum Routine test Interval For Protection Relays," by J. J. Kumm, M.S. Weber, D. Hou, and E. O. Schweitzer, III, IEEE Transactions on Power Delivery, Vol. 10, No. 2, April 1995.
2. "Transmission Relay System Performance Comparison For 2000, 2001, 2002, 2003, 2004 and 2005," Working Group I17 of Power System Relaying Committee of IEEE Power Engineering Society, May 2006.
3. "A Survey of Relaying Test Practices," Special Report by WG I11 of Power System Relaying Committee of IEEE Power Engineering Society, September 16, 1999.
4. "Transmission Protective Relay System Performance Measuring Methodology," Working Group I3 of Power System Relaying Committee of IEEE Power Engineering Society, January 2002.
5. "Processes, Issues, Trends and Quality Control of Relay Settings," Working Group C3 of Power System Relaying Committee of IEEE Power Engineering Society, December 2006.
6. "Proposed Statistical Performance Measures for Microprocessor-Based Transmission-Line Protective Relays, Part I - Explanation of the Statistics, and Part II - Collection and Uses of Data," Working Group D5 of Power System Relaying Committee of IEEE Power Engineering Society, May 1995; Papers 96WM 016-6 PWRD and 96WM 127-1 PWRD, 1996 IEEE Power Engineering Society Winter Meeting.
7. "Analysis And Guidelines For Testing Numerical Protection Schemes," Final Report of CIGRE WG 34.10, August 2000.
8. "Use of Preventative Maintenance and System Performance Data to Optimize Scheduled Maintenance Intervals," H. Anderson, R. Loughlin, and J. Zipp, Georgia Tech Protective Relay Conference, May 1996.

PSMT SDT References

9. "Essentials of Statistics for Business and Economics" Anderson, Sweeney, Williams, 2003
10. "Introduction to Statistics and Data Analysis" - Second Edition, Peck, Olson, Devore, 2005
11. "Statistical Analysis for Business Decisions" Peters, Summers, 1968

Figures

Figure 1: Typical Transmission System

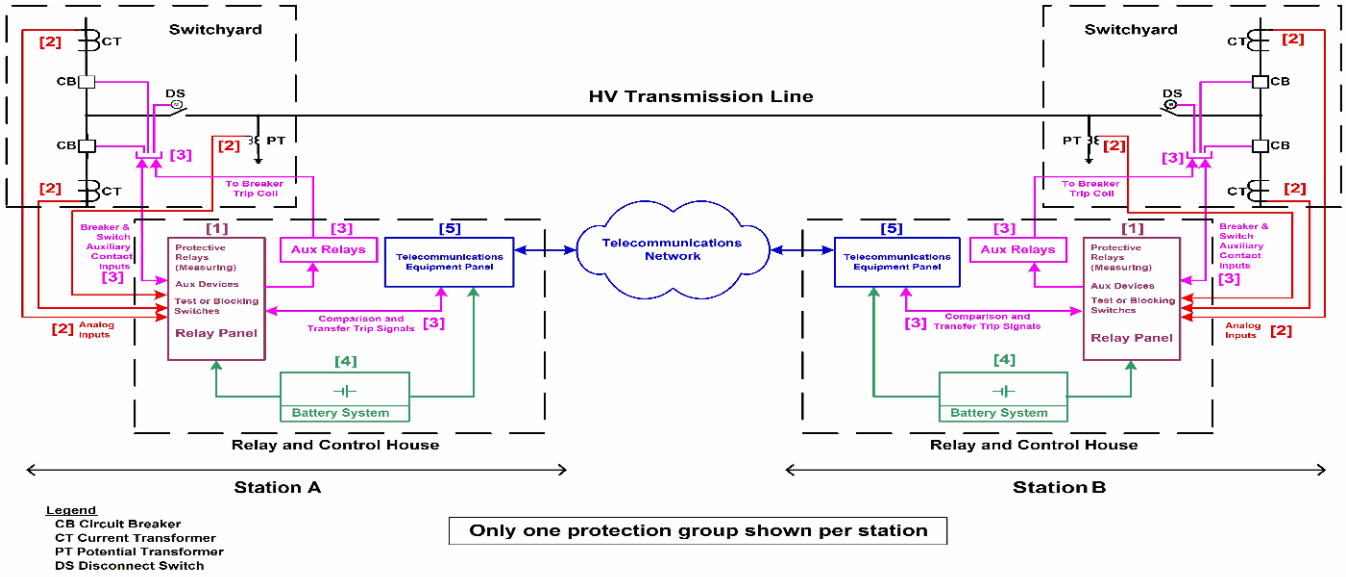

For information on numbered components, see ***Figure 1 & 2 Legend – Components of Protection Systems***

(Return)

Figure 2: Typical Generation System

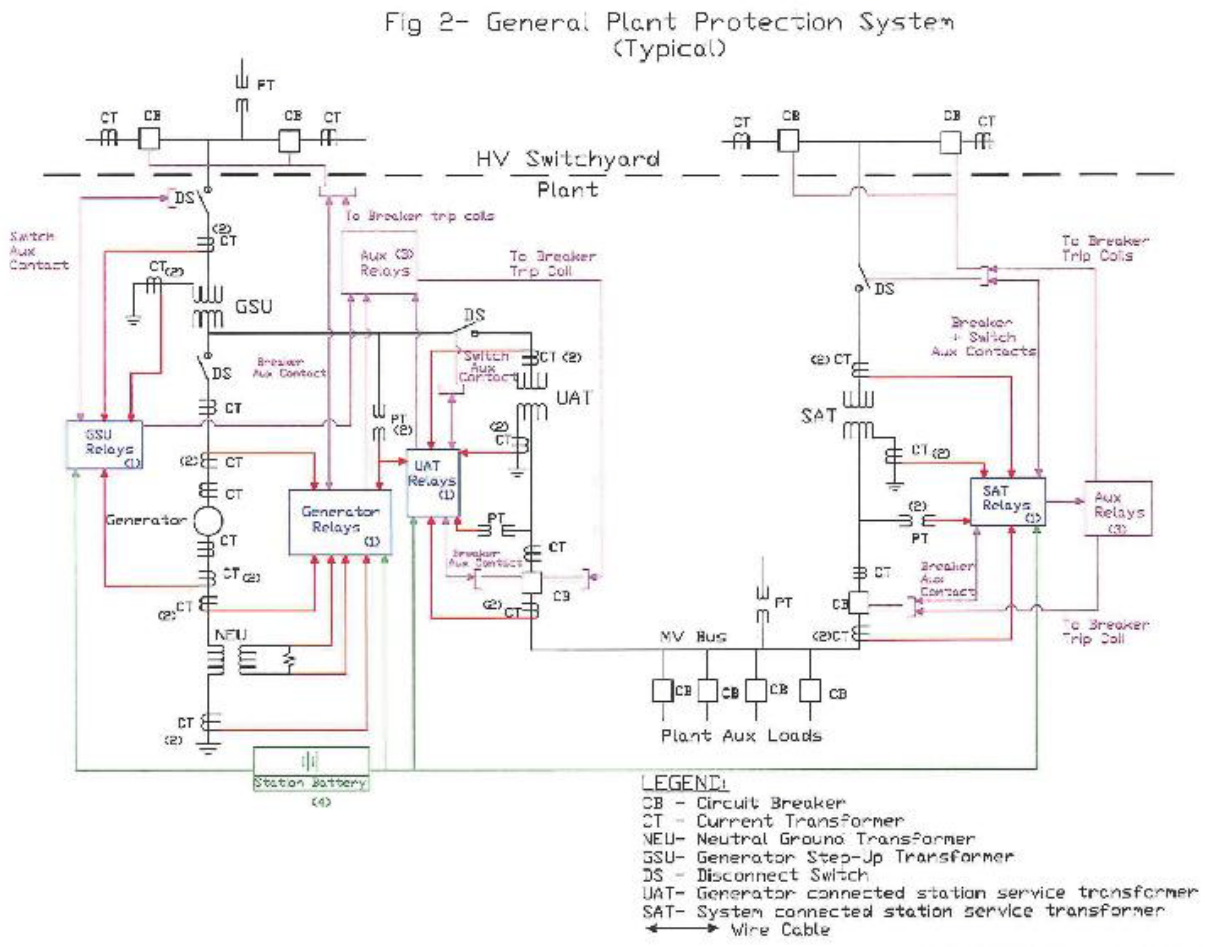

For information on numbered components, see ***Figure 1 & 2 Legend – Components of Protection Systems***

(Return)

Figure 1 & 2 Legend – Components of Protection Systems

Number In Figure	Component of Protection System	Includes	Excludes
1	Protective relays	All protective relays that use current and/or voltage inputs from current & voltage sensors and that trip the 86, 94 or trip coil.	Devices that use non-electrical methods of operation including thermal, pressure, gas accumulation, and vibration. Any ancillary equipment not specified in the definition of Protection systems. Control and/or monitoring equipment that is not a part of the automatic tripping action of the Protection System
2	Voltage & Current Sensing Devices and associated circuitry	The signals from the voltage & current sensing devices for protective relays as well as the wiring (or other medium) used to convey signal output from the sensor to the protective relay input.	Voltage & current sensing devices that are not a part of the Protection System, including sync-check systems, metering systems and data acquisition systems.
3	DC Circuitry	All control wiring (or other medium for conveying trip signals) associated with the tripping action of 86 devices, 94 devices or trip coils (from all parallel trip paths). This would include fiber-optic systems that carry a trip signal as well as hard-wired systems that carry trip current.	Closing circuits, SCADA circuits
4	Station dc supply	Batteries and battery chargers and any control power system which has the function of supplying power to the protective relays, associated trip circuits and trip coils.	Any power supplies that are not used to power protective relays or their associated trip circuits and trip coils.
5	Associated communications systems	Tele-protection equipment used to convey remote tripping action to a local trip coil or blocking signal to the trip logic (if applicable).	Any communications equipment that is not used for remote tripping action to a local trip coil or blocking signal to the trip logic (if applicable).

(Return)

Figure 3: Requirements Flowchart

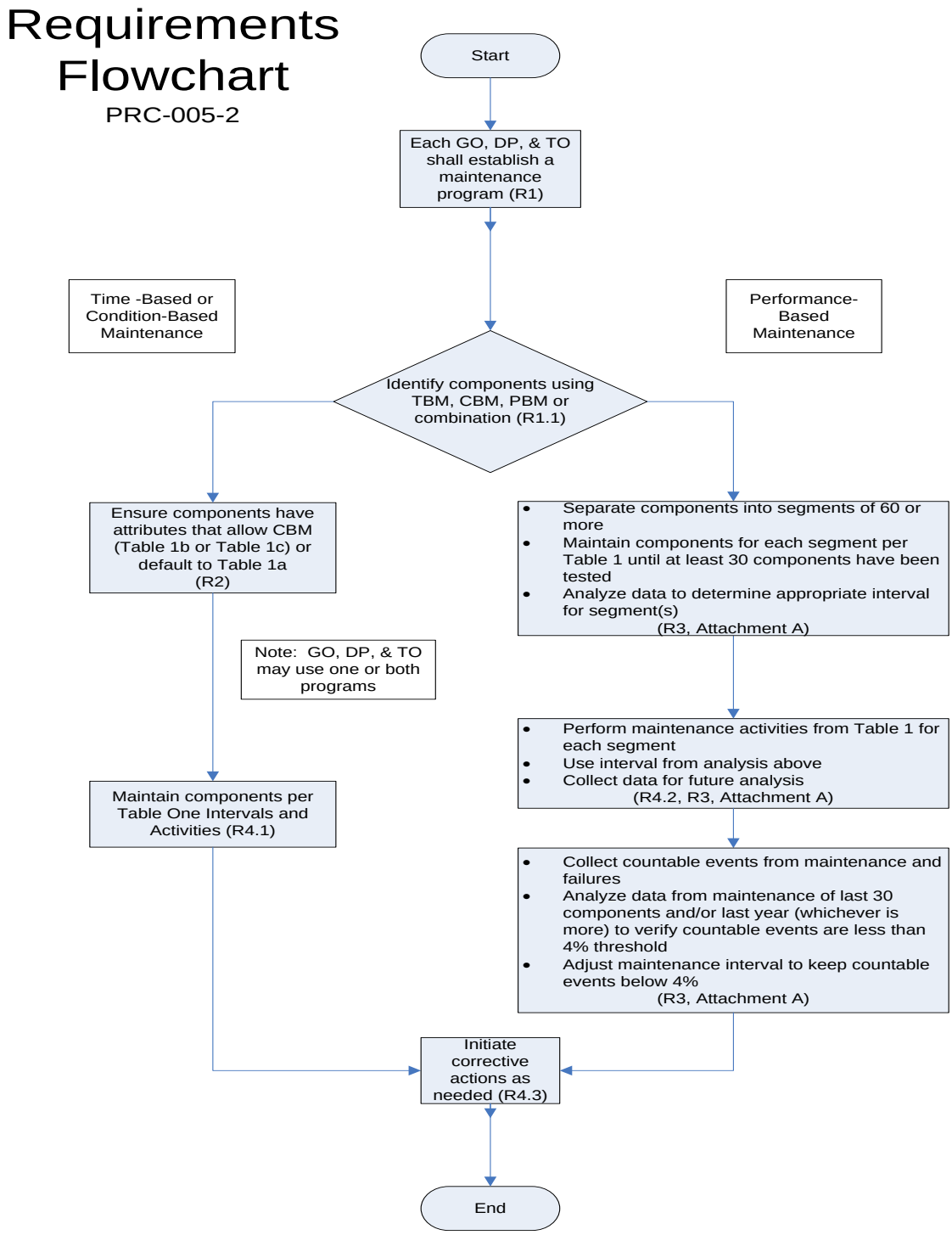

Appendix A

The following illustrates the concept of overlapping verifications and tests as summarized in Section 10 of the paper. As an example, Figure A-1 shows protection for a critical transmission line by carrier blocking directional comparison pilot relaying. The goal is to verify the ability of the entire two-terminal pilot protection scheme to protect for line faults, and to avoid over-tripping for faults external to the transmission line zone of protection bounded by the current transformer locations.

Figure A-1

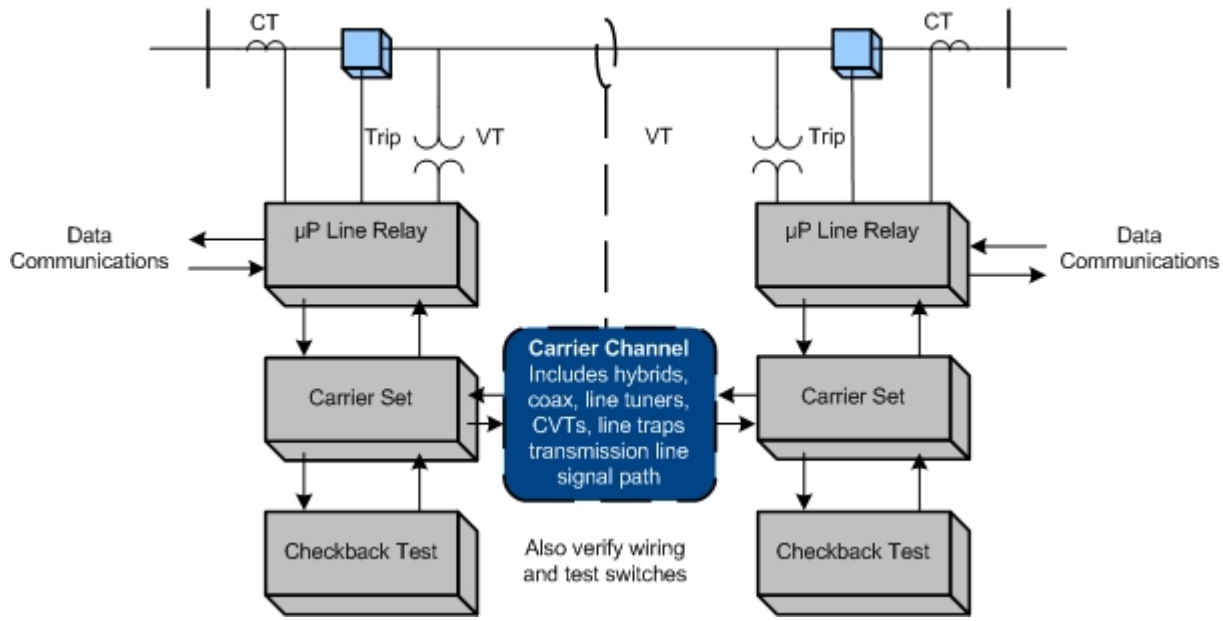

In this example (Figure A1), verification takes advantage of the self-monitoring features of microprocessor multifunction line relays at each end of the line. For each of the line relays themselves, the example assumes that the user has the following arrangements in place:

1. The relay has a data communications port that can be accessed from remote locations.
2. The relay has internal self-monitoring programs and functions that report failures of internal electronics, via communications messages or alarm contacts to SCADA.
3. The relays report loss of dc power, and the relays themselves or external monitors report the state of the dc battery supply.
4. The CT and PT inputs to the relays are used for continuous calculation of metered values of volts, amperes, plus Watts and VARs on the line. These metered values are reported by data communications. For maintenance, the user elects to compare these readings to those of other relays, meters, or DFRs. The other readings may be from redundant relaying or measurement systems or they may be derived from values in other protection zones. Comparison with other such readings to within required relaying accuracy verifies Voltage & Current Sensing

Devices, wiring, and analog signal input processing of the relays. One effective way to do this is to utilize the relay metered values directly in SCADA, where they can be compared with other references or state estimator values.

5. Breaker status indication from auxiliary contacts is verified in the same way as in (2). Status indications must be consistent with the flow or absence of current.
6. Continuity of the breaker trip circuit from dc bus through the trip coil is monitored by the relay and reported via communications.
7. Correct operation of the on-off carrier channel is also critical to security of the protection system, so each carrier set has a connected or integrated automatic checkback test unit. The automatic checkback test runs several times a day. Newer carrier sets with integrated checkback testing check for received signal level and report abnormal channel attenuation or noise, even if the problem is not severe enough to completely disable the channel.

These monitoring activities plus the check-back test comprise automatic verification of all the protection system elements that experience tells us are the most prone to fail. But, does this comprise a complete verification?

Figure A-2

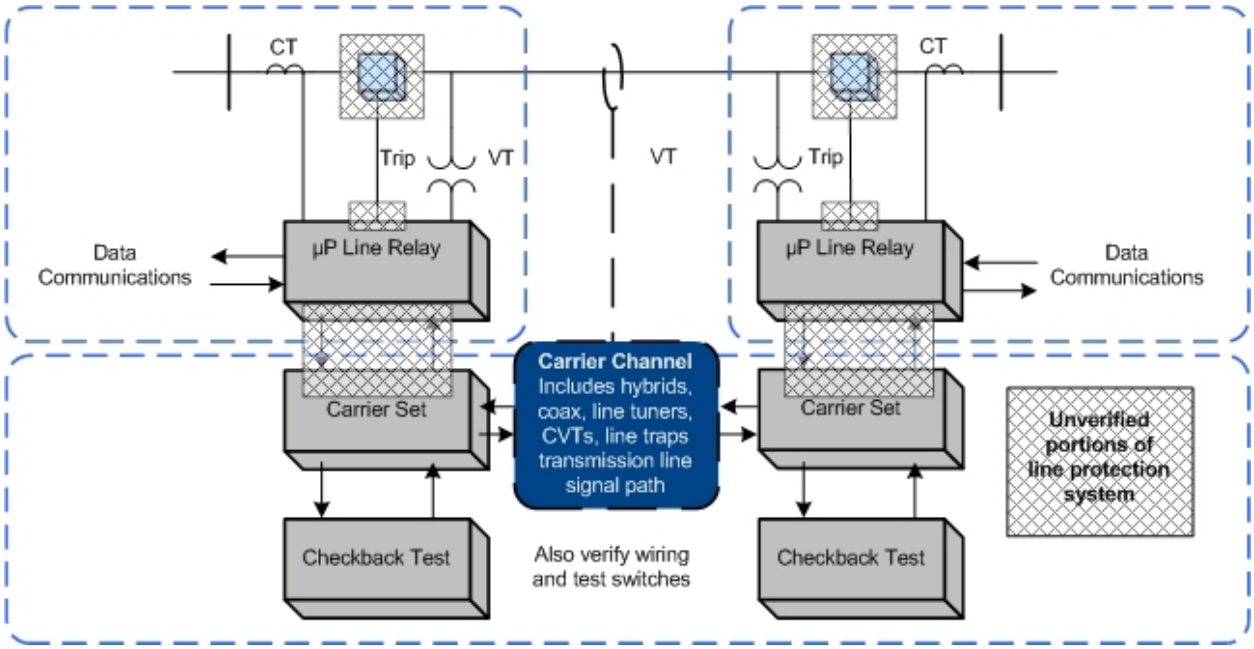

The dotted boxes of Figure A-2 show the sections of verification defined by the monitoring and verification practices just listed. These sections are not completely overlapping, and the shaded regions show elements that are not verified:

1. The continuity of trip coils is verified, but no means is provided for validating the ability of the circuit breaker to trip if the trip coil should be energized.

2. Within each line relay, all the microprocessors that participate in the trip decision have been verified by internal monitoring. However, the trip circuit is actually energized by the contacts of a small telephone-type "ice cube" relay within the line protective relay. The microprocessor energizes the coil of this ice cube relay through its output data port and a transistor driver circuit. There is no monitoring of the output port, driver circuit, ice cube relay, or contacts of that relay. These components are critical for tripping the circuit breaker for a fault.
3. The check-back test of the carrier channel does not verify the connections between the relaying microprocessor internal decision programs and the carrier transmitter keying circuit or the carrier receiver output state. These connections include microprocessor I/O ports, electronic driver circuits, wiring, and sometimes telephone-type auxiliary relays.
4. The correct states of breaker and disconnect switch auxiliary contacts are monitored, but this does not confirm that the state change indication is correct when the breaker or switch opens.

A practical solution for (1) and (2) is to observe actual breaker tripping, with a specified maximum time interval between trip tests. Clearing of naturally-occurring faults are demonstrations of operation that reset the time interval clock for testing of each breaker tripped in this way. If faults do not occur, manual tripping of the breaker through the relay trip output via data communications to the relay microprocessor meets the requirement for periodic testing.

PRC-005 does not address breaker maintenance, and its protection system test requirements can be met by energizing the trip circuit in a test mode (breaker disconnected) through the relay microprocessor. This can be done via a front-panel button command to the relay logic, or application of a simulated fault with a relay test set. However, utilities have found that breakers often show problems during protection system tests. It is recommended that protection system verification include periodic testing of the actual tripping of connected circuit breakers.

Testing of the relay-carrier set interface in (3) requires that each relay key its transmitter, and that the other relay demonstrate reception of that blocking carrier. This can be observed from relay or DFR records during naturally occurring faults, or by a manual test. If the checkback test sequence were incorporated in the relay logic, the carrier sets and carrier channel are then included in the overlapping segments monitored by the two relays, and the monitoring gap is completely eliminated.

Appendix B — Protection System Maintenance Standard Drafting Team

Charles W. Rogers
Chairman
Consumers Energy Co.

John B. Anderson
Xcel Energy

Merle E. Ashton
Tri-State G&T

Bob Bentert
Florida Power & Light Company

John Ciufo
Hydro One Inc

Sam Francis
Oncor

Carol A Gerou
Midwest Reliability Organization

William Shultz
Southern Company Generation

Russell C Hardison
Tennessee Valley Authority

David Harper
NRG Texas Maintenance Services

Mark Lukas
ComEd

Al McMeekin
NERC Staff
North American Electric Reliability Corporation

Mark Peterson
Great River Energy

William Shultz
Southern Company Generation

Leonard Swanson, Jr
National Grid USA

Eric A Udren
Quanta Technology

Philip B Winston
Georgia Power Company

John A Zipp
ITC Holdings

NERC
NORTH AMERICAN ELECTRIC RELIABILITY COUNCIL

NORTH AMERICAN ELECTRIC RELIABILITY CORPORATION

PRC-005-2

Protection System Maintenance

Draft Supplementary Reference ~~(Draft 1)~~

May 27, 2010

Prepared by the

Protection System Maintenance and Testing Standard Drafting Team

to ensure the reliability of the bulk power system

116-390 Village Blvd., Princeton, NJ 08540
609.452.8060 | 609.452.9550 fax
www.nerc.com

~~July, 2009~~

PRC-005-2

Project 2007-17

Table of Contents

1. Introduction and Summary 4
2. Need for Verifying Protection System Performance....4
2.1 Existing NERC Standards for Protection System Maintenance and Testing 4
2.2 Proposed Modification to NERC Glossary Definition....5
2.3 Applicability of New Protection System Maintenance Standards 5
2.4 Applicable Relays 5
3. Relay Product Generations 6
4. Definitions 6
5. Time-Based Maintenance (TBM) Programs 7
Maintenance Practices....7
5.1 Extending Time-Based Maintenance 8
6. Condition-Based Maintenance (CBM) Programs....9
7. Time-Based versus Condition-Based Maintenance 10
8. Maximum Allowable Verification Intervals....10
Maintenance Tests....11
8.1 Table of Maximum Allowable Verification Intervals....11
Level 1 Monitoring (Unmonitored) Table 1a 12
Level 2 Monitoring (Partially Monitored) Table 1b 12
Level 3 Monitoring (Fully Monitored) Table 1c 12
8.2 Retention of Records 14
8.3 Basis for Table 1 Intervals....14
8.4 Basis for Extended Maintenance Intervals for Microprocessor Relays 15
9. Performance-Based Maintenance Process....16
9.1 Minimum Sample Size 17
10. Overlapping the Verification of Sections of the Protection System 19
11. Monitoring by Analysis of Fault Records 20
12. Importance of Relay Settings in Maintenance Programs 20
13. Self-Monitoring Capabilities and Limitations 21
14. Notification of Protection System Failures....22
15. Maintenance Activities....22
15.1 Protective Relays....22
15.2 Voltage & Current Sensing Devices 22
15.3 DC Control Circuitry....23
15.4 Batteries and DC Supplies 24
15.5 Tele-protection equipment....25
~~16. References....~~15.6 Examples of Evidence of Compliance 26
~~Figures....~~16. References 27
~~Figure 1: Typical Transmission System....~~Figures 28
Figure ~~2~~1: Typical ~~Generation~~Transmission System....28
Figure ~~3: Requirements Flowchart~~2: Typical Generation System....29
~~Appendix A....~~Figure 3: Requirements Flowchart 31
~~PRC-005-2 Protection Systems Maintenance & Testing Standard Drafting Team.....~~Appendix A 33
Appendix B — Protection System Maintenance Standard Drafting Team....36

This supplementary reference to PRC-005-2 borrows heavily from the technical reference by the System Protection and Control Task Force (SPCTF) (Protection System Maintenance Technical Reference paper approved by the Planning Committee in September 2007). Additionally, the Protection System Maintenance and Testing Standard Drafting Team (~~PSMT SDT~~PSMTSDT) for PRC-005-2 (Project 2007-17) utilized ~~data available from IEEE, EPRI and~~ maintenance ~~programs~~program data from various generation and transmission utilities across the NERC boundaries~~.~~; as well as data from IEEE and EPRI.

1. Introduction and Summary

NERC currently has four reliability standards that are mandatory and enforceable in the United States and address various aspects of maintenance and testing of ~~protection~~Protection and ~~control~~Control systems. These standards are:

PRC-005-1 — *Transmission and Generation Protection System Maintenance and Testing*

PRC-008-0 — *Underfrequency Load Shedding Equipment Maintenance Programs*

PRC-011-0 — *UVLS System Maintenance and Testing*

PRC-017-0 — *Special Protection System Maintenance and Testing*

While these standards require that applicable entities have a maintenance program for Protection Systems, and that these entities must be able to demonstrate they are carrying out such a program, there are no specifics regarding the technical requirements for Protection System maintenance programs. Furthermore, FERC Order 693 directed additional modifications respective to Protection System maintenance programs. This revision of PRC-005-1 combines and replaces PRC-005, PRC-008, PRC-011 and PRC-017.

2. Need for Verifying Protection System Performance

Protective relays have been described as silent sentinels, and do not generally demonstrate their performance until a fault or other power system problem requires that they operate to protect power system elements, or even the entire Bulk Electric System (BES). Lacking faults or system problems, the protection systems may not operate for extended periods. A ~~misoperation~~Misoperation - a false operation of a protection system or a failure of the protection system to operate, as designed, when needed - can result in equipment damage, personnel hazards, and wide area disturbances or unnecessary customer outages. A maintenance or testing program is used to determine the performance and availability of protection systems.

Typically, utilities have tested protection systems at fixed time intervals, unless they had some incidental evidence that a particular protection system was not behaving as expected. Testing practices vary widely across the industry. Testing has included system functionality, calibration of measuring relays, and correctness of settings. Typically, a protection system must be visited at its installation site and removed from service for this testing.

Fundamentally, a reliability standard for Protection System Maintenance and Testing requires the performance of the maintenance activities that are necessary to detect and correct plausible age and service related degradation of components such that a properly built and commissioned Protection System will continue to function as designed over its service life.

2.1 Existing NERC Standards for Protection System Maintenance and Testing

For critical BES protection functions, NERC standards have required that each utility or asset owner define a testing program. The starting point is the existing Standard PRC-005, briefly restated as follows:

Purpose: To ensure all transmission and generation Protection Systems affecting the reliability of the Bulk Electric System (BES) are maintained and tested.

PRC-005-1 is not specific on where the boundaries of the Protection Systems lie. However, the definition of Protection System in the NERC Glossary of Terms~~ Used in Reliability Standards~~ used in Reliability Standards indicates what must be included as a minimum.

Definition of *Protection System* (excerpted from the NERC Standards Glossary of Terms):

Protective relays, associated communication systems, voltage and current sensing devices, station batteries and dc control circuitry.

Applicability: Owners of generation~~, transmission,~~ and transmission Protection Systems.

Requirements: The owner shall have a documented maintenance program with test intervals. The owner must keep records showing that the maintenance was performed at the specified intervals.

2.2 Proposed Modification to NERC Glossary Definition

The Protection Systems Maintenance and Testing Standard Drafting Team (PSM SDT), proposes changes to the NERC glossary definition of *Protection Systems* as follows:

Protection System (modification) - Protective relays, ~~associated~~ communication systems necessary for correct operation of protective ~~devices~~functions, voltage and current sensing devices inputs to protective relays and associated circuitry from the voltage and current sensing devices, station DC supply, and ~~DC~~ control circuitry, associated with protective functions from the station DC supply through the trip coil(s) of the circuit breakers or other interrupting devices.

2.3 Applicability of New Protection System Maintenance Standards

The BES purpose is to transfer bulk power. The applicability language has been changed from the original PRC-005:
"*...affecting the reliability of the Bulk Electric System (BES)…*"

To the present language:
"*… and that are applied on, or are designed to provide protection for the BES.*"

The drafting team intends that this Standard will not apply to "merely possible" parallel paths, (sub-transmission and distribution circuits), but rather the standard applies to any Protection System that is designed to detect a fault on the BES and take action in response to that fault. The Standard Drafting Team does not feel that Protection Systems designed to protect distribution substation equipment are included in the scope of this standard; however, this will be impacted by the Regional definitions of the BES.

2.4 Applicable Relays

The NERC Glossary definition has a Protection System including relays, dc supply, current and voltage sensing devices, dc control circuitry and associated communications circuits. The relays to which this standard applies are those relays~~ that~~ that use measurements of voltage, current, frequency and/or phase angle and provide a trip output to trip coils, dc control circuitry or associated communications equipment. This definition extends to IEEE device # 86 (lockout relay) and IEEE device # 94 (tripping or trip-free relay) as these devices are tripping relays that respond to the trip signal of the protective relay that processed the signals from the current and voltage sensing devices.

Relays that respond to non-electrical inputs or impulses (such as, but not limited to, vibration, pressure, seismic, thermal or gas accumulation) are not included.

3. Relay Product Generations

The likelihood of failure and the ability to observe the operational state of a critical protection system, both depends on the technological generation of the relays as well as how long they have been in service. Unlike many other transmission asset groups, protection and control systems have seen dramatic technological changes spanning several generations. During the past 20 years, major functional advances are primarily due to the introduction of microprocessor technology for power system devices such as primary measuring relays, monitoring devices, control systems, and telecommunications equipment.

Modern microprocessor based relays have six significant traits that impact a maintenance strategy:

- Self monitoring capability - the processors can check themselves, peripheral circuits, and some connected substation inputs and outputs such as trip coil continuity. Most relay users are aware that these relays have self monitoring, but are not focusing on exactly what internal functions are actually being monitored. As explained further below, every element critical to the protection system must be monitored, or else verified periodically.
- Ability to capture fault records showing how the protection system responded to a fault in its zone of protection, or to a nearby fault for which it is required not to operate.
- Ability to meter currents and voltages, as well as status of connected circuit breakers, continuously during non-fault times. The relays can compute values such as MW and MVAR line flows that are sometimes used for operational purposes such as SCADA.
- Data communications via ports that provide remote access to all of the results of protection system monitoring, recording, and measurement.
- Ability to trip or close circuit breakers and switches through the protection system outputs, on command from remote data communications messages or from relay front panel button requests.
- Construction from electronic components some of which have shorter technical life or service life than electromechanical components of prior protection system generations.

4. Definitions

Protection System Maintenance Program (PSMP) – An ongoing program by which Protection System components are kept in working order and proper operation of malfunctioning components is restored. A maintenance program ~~can include~~for a specific component includes one or more of the following activities:

An ongoing program by which Protection System components are kept in working order and where malfunction components are restored to working order

Verification – A means of determining that the component is functioning correctly.

- **Monitoring** – Observation of the routine in-service operation of the component.
- **Testing** – Application of signals to a component to observe functional performance or output behavior, or to diagnose problems.
- ~~**Physical**~~ **Inspection** – To detect visible signs of component failure, reduced performance and degradation.
- **Calibration** – Adjustment of the operating threshold or measurement accuracy of a measuring element to meet the intended performance requirement.

- **Upkeep** – Routine activities necessary to assure that the component remains in good working order and implementation of any manufacturer's hardware and software service advisories which are relevant to the application of the device.
- **Restoration** – The actions to restore proper operation of malfunctioning components.

5. Time-Based Maintenance (TBM) Programs

Time-based maintenance is the process in which protection systems are maintained or verified according to a time schedule. The scheduled program often calls for technicians to travel to the physical site and perform a functional test on protection system components. However, some components of a TBM program may be conducted from a remote location - for example, tripping a circuit breaker by communicating a trip command to a microprocessor relay to determine if the entire protection system tripping chain is able to operate the breaker.

Maintenance Practices

Maintenance and testing programs often incorporate the following types of maintenance practices:

- TBM – time-based maintenance – externally prescribed maximum maintenance or testing intervals are applied for components or groups of components. The intervals may have been developed from prior experience or manufacturers' recommendations. The TBM verification interval is based on a variety of factors, including experience of the particular asset owner, collective experiences of several asset owners who are members of a country or regional council, etc. The maintenance intervals are fixed, and may range in number of months or in years.

  TBM can include review of recent power system events near the particular terminal. Operating records may ~~prove~~verify that some portion of the protection system has operated correctly since the last test occurred. If specific protection scheme components have demonstrated correct performance within specifications, the maintenance test time clock is reset for those components.

- PBM – performance-based maintenance ~~maintenance~~- intervals are established based on analytical or historical results of TBM failure rates on a statistically significant population of similar components. Some level of TBM is generally followed. Statistical analyses accompanied by adjustments to maintenance intervals are used to justify continued use of PBM-developed extended intervals when test failures or in-service failures occur infrequently.

- CBM – condition-based maintenance – continuously or frequently reported results from non-disruptive self monitoring of components demonstrate operational status as those components remain in service. Whatever is verified by CBM does not require manual testing, but taking advantage of this requires precise technical focus on exactly what parts are included as part of the self diagnostics.

  Microprocessor based protective relays that perform continuous self-monitoring verify correct operation of most components within the device. Self-monitoring capabilities may include the ac signal inputs, analog measuring circuits, processors and memory for measurement, protection, and data communications, trip circuit monitoring, and protection or data communications signals. For those conditions, failure of a self-monitoring routine generates an alarm and may inhibit operation to avoid false trips. When internal components, such as critical output relay contacts, are not equipped with self-monitoring, they can be manually tested. The method of testing may be local or remote, or through inherent performance of the scheme during a system event.

The TBM is the overarching maintenance process of which the other types are subsets. Unlike TBM, PBM intervals are adjusted based on good or bad experiences. The CBM verification intervals can be hours or even milliseconds between non-disruptive self monitoring checks within or around components as they remain in service.

TBM, PBM, and CBM can be combined for individual components, or within a complete Protection System. The following diagram illustrates the relationship between various types of maintenance practices described in this section. In the Venn diagram the overlapping regions show the relationship of TBM with PBM historical information and the inherent continuous monitoring offered through CBM. This figure shows:

- Region 1: The TBM intervals that are increased based on known reported operational condition of individual components that are monitoring themselves.
- Region 2: The TBM intervals that are adjusted up or down based on results of analysis of maintenance history of statistically significant population of similar products that have been subject to TBM.
- Region 3: Optimal TBM intervals based on regions 1 and 2.

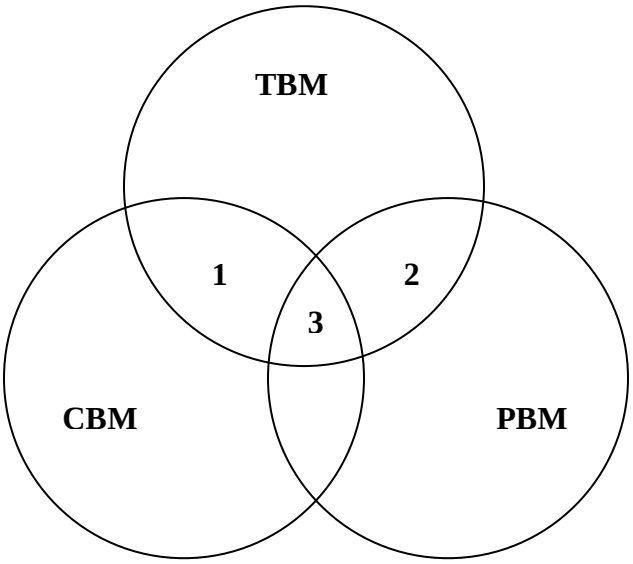

Relationship of time-based maintenance types

5.1 Extending Time-Based Maintenance

All maintenance is fundamentally time-based. Default time-based intervals are commonly established to assure proper functioning of each component of the protection system, when data on the reliability of the components is not available other than observations from time-based maintenance. The following factors may influence the established default intervals:

- If continuous indication of the functional condition of a component is available (from relay self monitoring, for example), the intervals may be extended or manual testing may be eliminated. This is referred to as condition-based maintenance or CBM. CBM is valid only for precisely the

components subject to monitoring. In the case of microprocessor-based relays, self-monitoring may not include automated diagnostics of every component within a microprocessor.

- Previous maintenance history for a group of components of a common type may indicate that the maintenance intervals can be extended while still achieving the desired level of performance. This is referred to as performance-based maintenance or PBM. It is also sometimes ~~also~~ referred to as reliability-centered maintenance or RCM, but PBM is used in this document.
- Observed proper operation of a component may be regarded as a maintenance verification of the respective component or element in a microprocessor-based device. For such an observation, the maintenance interval may be reset only to the degree that can be verified by data available on the operation. For example, the trip of an electromechanical relay for a fault verifies the trip contact and trip path, but only through the relays in series that actually operated; one operation of this relay cannot ~~prove~~verify correct calibration.

Excessive maintenance can actually decrease the reliability of the component or system. It is not unusual to cause failure of a component by removing it from service and restoring it. The improper application of test signals may cause failure of a component. For example, in electromechanical overcurrent relays, test currents have been known to destroy convolution springs.

In addition, maintenance usually takes the component out of service, during which time it is not able to perform its function. Cutout switch failures, or failure to restore switch position, commonly lead to protection failures.

6. Condition-Based Maintenance (CBM) Programs

Condition-based maintenance is the process of gathering and monitoring the information available from modern microprocessor-based relays and other intelligent electronic devices (IEDs) that monitor protection system elements. These relays and IEDs generate monitoring information during normal operation, and the information can be assessed at a convenient location remote from the substation. The information from these relays and IEDs is divided into two basic types:

1. Information can come from background self-monitoring processes, programmed by the manufacturer, or by the user in relay logic settings. The results are presented by alarm contacts or points, front panel indications, and by data communications messages.
2. Information can come from event logs, captured files, and/or oscillograph records for faults and disturbances, metered values, and binary input status reports. Some of these are available on the relay front panel display, but may be available via data communications ports. Large files of fault information can only be retrieved via data communications. These results comprise a mass of data that must be further analyzed for evidence of the operational condition of the protection system.

Using these two types of information, the user can develop an effective maintenance program carried out mostly from a central location remote from the substation. This approach offers the following advantages:

1. Non-invasive Maintenance: The system is kept in its normal operating state, without human intervention for checking. This reduces risk of damage, or risk of leaving the system in an inoperable state after a manual test. Experience has shown that keeping human hands away from equipment known to be working correctly enhances reliability.
2. Virtually Continuous Monitoring: CBM will report many hardware failure problems for repair within seconds or minutes of when they happen. This reduces the percentage of problems that are discovered through incorrect relaying performance. By contrast, a

hardware failure discovered by TBM may have been there for much of the time interval between tests, and there is a good chance that some relays will show health problems by incorrect relaying before being caught in the next test round. The frequent or continuous nature of CBM makes the effective verification interval far shorter than any required TBM maximum interval.

7. Time-Based versus Condition-Based Maintenance

Time-based and condition-based maintenance programs are both acceptable, if implemented according to technically sound requirements. Practical programs can employ a *combination of time-based and condition-based maintenance.* The standard requirements introduce the concept of optionally using condition monitoring as a documented element of a maintenance program.

The Federal Energy Regulatory Commission (FERC), in its Order Number 693 Final Rule dated March 16, 2007 (18 CFR Part 40, Docket No. RM06-16-000) on Mandatory Reliability Standards for the Bulk-Power System, directed NERC to submit a modification to PRC-005-1 that includes a requirement that maintenance and testing of a protection system must be carried out within a maximum allowable interval that is appropriate to the type of the protection system and its impact on the reliability of the Bulk Power System. Accordingly, this Supplementary Reference Paper refers to the specific maximum allowable intervals in PRC-005-2. The defined time limits allow for longer time intervals if the maintained device is monitored.

A key feature of condition-based monitoring is that it effectively reduces the time delay between the moment of a protection failure and time the protection system owner knows about it, for the monitored segments of the protection system. In some cases, the verification is practically continuous - the time interval between verifications is minutes or seconds. Thus, technically sound, condition-based verification (as specified in the header and the "Monitoring Attributes" column of Tables ~~1a,~~ 1b and 1c of PRC-005-2), meets the verification requirements of the FERC order even more effectively than the strictly time-based tests of the same system elements as contained in Table 1a.

The result is that:

This NERC standards permits utilities to use a technically sound approach and to take advantage of remote monitoring, data analysis, and control capabilities of modern protection systems to reduce the need for periodic site visits and invasive testing of components by on-site technicians. This periodic testing must be conducted within maximum time intervals specified in Tables 1a, 1b and 1c of PRC-005-2.

8. Maximum Allowable Verification Intervals

The ~~Table of~~ Maximum Allowable Testing Intervals and Maintenance Activities ~~and Maximum Interval~~ requirements ~~shows~~show how CBM with newer relay types can reduce the need for many of the tests and site visits that older protection systems require. As explained below, there are some sections of the protection system that monitoring or data analysis may not verify. Verifying these sections of the Protection Systems requires some persistent TBM activity in the maintenance program. However, some of this TBM can be carried out remotely - for example, exercising a circuit breaker through the relay tripping circuits using the relay remote control capabilities ~~via data communications~~can be used to verify function of one tripping path and proper trip coil operation, if there has been no fault or routine operation to demonstrate performance of relay tripping circuits.

Maintenance Tests

Periodic maintenance testing is performed to ensure that the protection and control system is operating correctly after a time period~~ of time~~ of field installation. These tests may be used to ensure that individual components are still operating within acceptable performance parameters - this type of test is needed for components susceptible to degraded or changing characteristics due to aging and wear. Full system performance tests may be used to confirm that the total protection system functions from measurement of power system values, to properly identifying fault characteristics, to the operation of the interrupting devices.

8.1 Table of Maximum Allowable Verification Intervals

Table 1, in the standard, specifies maximum allowable verification intervals for various generations of protection systems and categories of equipment that comprise protection systems. The right column indicates ~~verification or testing~~maintenance activities required for each category.

The types of components are illustrated in Figures 1 and 2 at the end of this paper. Figure 1 shows an example of telecommunications-assisted line protection system comprising substation equipment at each terminal and a telecommunications channel for relaying between the two substations. Figure 2 shows a typical Generation station layout. The various subsystems of a Protection System that need to be verified are shown. UFLS, UVLS, and SPS are additional categories of Table 1 that are not illustrated in these Figures.

While it is easy to associate protective relays to the three levels of monitoring, it is also true that most of the components that can make up a Protection System can also have technological advancements that place them into higher levels of monitoring.

To use the Maintenance Activities and Intervals Tables (Tables 1a, 1b and 1c collectively *Tables*) from PRC-005-2:

- First check the table header description to verify that your equipment meets the monitoring requirements. If your equipment does not meet the monitoring requirements of Table 1c then check Table 1b. If your equipment does not meet the requirements of Table 1b then use Table 1a.
- If you find a piece of equipment that meets the monitoring requirements of Table 1b or 1c then you can take advantage of the extended time intervals allowed by Table 1b and 1c. Your maintenance plan must document that this ~~category of equipment~~component can be maintained by the requirements of Table 1b or 1c because it has the necessary attributes required within that Table.
- Once you determine which table applies to your equipment's monitoring requirements then check the Maintenance Activity that is required for that particular ~~category of equipment.~~component. This Maintenance Activity is the minimum maintenance activity that must be documented.
- If your PSMP (plan) requires more then you must document more.
- After the maintenance activity is known, check the Maximum Maintenance Interval; this time is the maximum time allowed between hands-on maintenance activity cycles of this ~~category of your equipment~~component.
- If your PSMP (plan) requires activities more often than the Tables maximum then you must document those activities more often.
- Any given set of Protection System equipment can be maintained with any combination of Tables 1a, 1b and 1c. An entity does not have to stick to Table 1a just because some of its equipment is un-monitored.

- An entity does not have to utilize the extended time intervals in Tables 1b or 1c. An easy choice to make is to simply utilize Table 1a. While the maintenance activities resulting from choosing to use only Table 1a would require more maintenance man-hours, the maintenance requirements may be simpler to document and the resulting maintenance plans may be easier to create.

For each Protection System component, Table 1 shows maximum allowable testing intervals for unmonitored, partially monitored and fully monitored protection systems:

Table 1 Maximum Allowable Testing Intervals and Maintenance Activities ~~and Maximum Intervals~~

Level 1 Monitoring (Unmonitored) Table 1a

This table applies to electromechanical, analog solid state and other un-monitored Protection Systems components. This table represents the starting point for all required maintenance activities. The object of this group of requirements is to have specific activities accomplished at maximum set time intervals. From this group of activities it follows that CBM or PBM can increase the time intervals between the hands-on maintenance actions.

Level 2 Monitoring (Partially Monitored) Table 1b

This table applies to microprocessor relays and other associated Protection System components whose self-monitoring alarms are transmitted to a location (at least daily) where action can be taken for alarmed failures. The attributes of the monitoring system must meet the requirements specified in the header of the Table 1b. Given these advanced monitoring capabilities, it is known that there are specific and routine testing functions occurring within the device. Because of this ongoing monitoring hands-on action is required less often because routine testing is automated. However, there is now an additional task that must be accomplished during the hands-on process – the monitoring and alarming functions must be shown to work.

Level 3 Monitoring (Fully Monitored) Table 1c

This table applies to microprocessor relays and other associated Protection System components in which every element or function required for correct operation of the Protection System component is monitored continuously and verified, including verification of the means by which failure alarms or indicators are transmitted to a ~~central location for immediate action.~~location within 1 hour or less of the maintenance-correctable issue occurring. This is the highest level of monitoring and if it is available then this gives an entity the ability to have continuous testing of their (Level 3 Monitored) Protection System Component and thus does not have to manually intervene to accomplish routine testing chores. Level 3 Fully Monitored yields continuous monitoring advantages but has substantial technical hurdles that must be overcome; namely that monitoring also verifies the failure of the monitoring and alarming equipment. Without this important ingredient a device that is thought to be continuously monitored could be in an alarm state without the ~~central location~~asset owner being ~~made~~ aware of this alarm state.

Additional Notes for Table 1a, Table 1b, and Table 1c

1. For electro-mechanical relays, adjustment is required to bring measurement accuracy within the tolerance needed by the asset owner. Microprocessor-relays with no remote monitoring of alarm contacts, etc, are un-monitored relays and need to be verified within the Table interval as other un-monitored relays but may be verified as functional by means other than testing by simulated inputs.

2. Microprocessor relays typically are specified by manufacturers as not requiring calibration, but acceptable measurement of power system input values must be verified (verification of the Analog to Digital [A/D] converters) within the Table intervals. The integrity of the digital inputs and outputs must be verified within the Table intervals.

3. Any Phasor Measurement Unit (PMU) function whose output is used in a protection system or SPS (as opposed to a monitoring task) must be verified as a component in a protection system.

4. In addition to verifying the circuitry that supplies dc to the protection system, the owner must maintain the station dc supply. The most widespread station dc supply is the station battery and charger. Unlike most Protection System elements physical inspection of station batteries for signs of component failure, reduced performance, and degradation are required to ensure that the station battery is reliable enough to deliver dc power when required. IEEE Standards 450, 1188, and 1106 for Vented Lead-Acid, Valve-Regulated Lead-Acid, and Nickel-Cadmium batteries, respectively (which are the most commonly used substation batteries on the NERC BES) have been developed as an important reference source of maintenance recommendations. The Protection System owner ~~should attempt to~~might use the applicable IEEE recommended practice which contains information and recommendations concerning the maintenance, testing and replacement of its substation battery. However, the methods prescribed in these IEEE recommendations cannot be specifically required because they do not apply to all battery applications.

5. Aggregated small entities ~~will naturally~~might distribute the testing of the population of UFLS/UVLS systems, and large entities will usually maintain a portion of these systems in any given year. Additionally, if relatively small quantities of such systems do not perform properly, it will not affect the integrity of the overall program.

6. Voltage & Current Sensing Device circuit input connections to the protection system relays can be verified by comparison of ~~known~~measured values~~ of other sources~~ on live circuits or by using test currents and voltages on equipment out of service for maintenance. The verification process can be automated or manual. The values should be verified to be as expected, (phase value and phase relationships are both equally important to ~~prove~~verify).

7. Verify the protection system tripping function by performing an operational trip test on all components contained in the trip circuit. This includes circuit breaker or circuit switcher trip coils, auxiliary tripping relays (94), lock-out relays (86), and communications-assisted trip scheme elements. Each control circuit path that carries trip signal must be verified, although each path must be checked only once. A maintenance program may include performing an overall test for the entire system at one time, or several split system tests with overlapping trip verification. ~~Trip coil continuity and aux contact verification may be accomplished by inspection for the proper control panel light indication. Remote alarm monitoring of the trip coil and aux contact continuity eliminates the need for tri-monthly inspections of trip coil indications.~~ A documented real-time trip of any given trip path is acceptable in lieu of a functional trip test.

8. "End-to-end test" as used in this supplementary reference is any testing procedure that creates a remote input to the local communications-assisted trip scheme. While this can be interpreted as a GPS-type functional test it is not limited to testing via GPS. Any remote scheme manipulation that can cause action at the local trip path can be used to functionally-test the dc Control Circuitry. A documented real-time trip of any given trip path is acceptable in lieu of a functional trip test. It is possible, with sufficient monitoring, to be able to ~~prove~~verify each and every parallel trip path that participated in any given dc Control Circuit trip. Or, another possible solution is that a single trip path from a single monitored relay can be ~~proven~~verified to be the trip path that successfully tripped during a real-time operation. The variations are only limited by the degree of engineering and monitoring that an entity desires to pursue.

9. A/D verification may use relay front panel value displays, or values gathered via data communications. Groupings of other measurements (such as vector summation of bus feeder currents) can be used for comparison if calibration requirements assure acceptable measurement of power system input values.
10. Notes 1-9 attempt to describe the testing activities they do not represent the only methods to achieve these activities but rather some possible methods.

8.2 Retention of Records

PRC-005-1 describes a reporting or auditing cycle of one year and retention of records for three years. However, with a three year retention cycle, the records of verification for a protection system will typically be discarded before the next verification, leaving no record of what was done if a ~~misoperation~~Misoperation or failure is to be analyzed.

PRC-005-2 corrects this by requiring ~~that the~~ :

The Transmission Owner, Generator Owner, and Distribution Provider shall each retain documentation ~~be retained for~~ of the two most recent performances of each distinct maintenance ~~intervals. Additionally, this~~activity for the Protection System components, or to the previous on-site audit date, whichever is longer.

This requirement assures that the documentation shows that the interval between maintenance cycles correctly meets the maintenance interval limits.

8.3 Basis for Table 1 Intervals

SPCTF authors collected all available data from Regional Entities (REs) on time intervals recommended for maintenance and test programs. The recommendations vary widely in categorization of relays, defined maintenance actions, and time intervals, precluding development of intervals by averaging. SPCTF also reviewed the 2005 Report [2] of the IEEE Power System Relaying Committee Working Group I-17 (Transmission Relay System Performance Comparison). Review of the I-17 report shows data from a small number of utilities, with no company identification or means of investigating the significance of particular results.

To develop a solid current base of practice, SPCTF surveyed its members regarding their maintenance intervals for electromechanical and microprocessor relays, and asked the members to also provide definitively-known data for other entities. The survey represented 470 GW of peak load, or 64% of the NERC peak load. Maintenance interval averages were compiled by weighting reported intervals according to the size (based on peak load) of the reporting utility. Thus, the averages more accurately represent practices for the large populations of protection systems used across the NERC regions.

The results of this survey with weighted averaging indicate maintenance intervals of 5 years for electromechanical or solid state relays, and 7 years for un-monitored microprocessor relays.

A number of utilities have extended maintenance intervals for microprocessor relays beyond 7 years, based on favorable experience with the particular products they have installed. To provide a technical basis for such extension, SPCTF authors developed a recommendation of 10 years using the Markov modeling approach from [1] as summarized in Section 8.4. The results of this modeling depend on the completeness of self-testing or monitoring. Accordingly, this extended interval is allowed by Table 1 only when such relays are monitored as specified in the header of Table 1b. Monitoring is capable of reporting protection system health issues that are likely to affect performance within the 10 year time interval between verifications.

It is important to note that, according to modeling results, protection system availability barely changes as the maintenance interval is varied below the 10-year mark. Thus, reducing the maintenance interval does

not improve protection system availability. With the assumptions of the model regarding how maintenance is carried out, reducing the maintenance interval actually degrades protection system availability.

8.4 Basis for Extended Maintenance Intervals for Microprocessor Relays

Table 1 allows maximum verification intervals that are extended based on monitoring level. The industry has experience with self-monitoring microprocessor relays that leads to the Table 1 value for partial monitoring as explained in Section 8.3. To develop a basis for the maximum interval for monitored relays in their *Protection System Maintenance – A Technical Reference*, the SPCTF used the methodology of Reference [1], which specifically addresses optimum routine maintenance intervals. The Markov modeling approach of [1] is judged to be valid for the design and typical failure modes of microprocessor relays.

The SPCTF authors ran test cases of the Markov model to calculate two key probability measures:

- Relay Unavailability - the probability that the relay is out of service due to failure or maintenance activity while the power system element to be protected is in service.
- Abnormal Unavailability - the probability that the relay is out of service due to failure or maintenance activity when a fault occurs, leading to failure to operate for the fault.

The parameter in the Markov model that defines self-monitoring capability is ST (for self test). ST = 0 if there is no self-monitoring; ST = 1 for full monitoring. Practical ~~STvalues~~ST values are estimated to range from .75 to .95. The SPCTF simulation runs used constants in the Markov model that were the same as those used in [1] with the following exceptions:

Sn, Normal tripping operations per hour = 21600 (reciprocal of normal fault clearing time of 10 cycles)

Sb, Backup tripping operations per hour = 4320 (reciprocal of backup fault clearing time of 50 cycles)

Rc, Protected component repairs per hour = 0.125 (8 hours to restore the power system)

Rt, Relay routine tests per hour = 0.125 (8 hours to test a protection system)

Rr, Relay repairs per hour = 0.08333 (12 hours to complete a protection system repair after failure)

Experimental runs of the model showed low sensitivity of optimum maintenance interval to these parameter adjustments.

The resulting curves for Relay Unavailability and Abnormal Unavailability versus maintenance interval showed a broad minimum (optimum maintenance interval) in the vicinity of 10 years – the curve is flat, with no significant change in either unavailability value over the range of 9, 10, or 11 years. This was true even for a relay Mean Time between Failures (MTBF) of 50 years, much lower than MTBF values typically published for these relays. Also, the Markov modeling indicates that both the relay unavailability and abnormal unavailability actually become higher with more frequent testing. This shows that the time spent on these more frequent tests yields no failure discoveries that approach the negative impact of removing the relays from service and running the tests.

PSMT SDT further notes that the SPCTF also allowed 25% extensions to the “maximum time intervals”. With a 5 year time interval established between manual maintenance activities and a 25% time extension then this equates to a 6.25 year maximum time interval. It is the belief of the PSMT SDT that the SPCTF understood that 6.25 years was thereby an adequate maximum time interval between manual maintenance

activities. The PSMT SDT has followed the FERC directive for a *maximum* time interval and has determined that no extensions will be allowed. Six years has been set for the maximum time interval between manual maintenance activities. This maximum time interval also works well for maintenance cycles that have been in use in generator plants for decades.

For monitored relays, the PSMT SDT notes that the SPCTF called for 10 years as the interval between maintenance activities. A 10 year interval with a 25% allowed extension equates to a maximum allowed interval of 12.5 years between manual maintenance activities. The Standard does not allow extensions on any component of the protection system; thus the maximum allowed interval for these devices has been set to12 years. Twelve years also fits well into the traditional maintenance cycles of both substations and generator plants.

Also of note is the Table's use of the term "Calendar" in the column for "Maximum Maintenance Interval". The PSMT SDT deemed it necessary to include the term "Calendar" to facilitate annual maintenance planning, scheduling and implementation. This need is the result of known occurrences of system requirements that could cause maintenance schedules to be missed by a few days or weeks. The PSMT SDT chose the term "Calendar" to preclude the need to have schedules be met to the day. An electro-mechanical protective relay that is maintained in year #1 need not be revisited until 6 years later (year #7). For example: a relay was maintained ~~December 15~~April 10, 2008; ~~it would be due for~~ maintenance ~~again~~would need to be completed no later than December 31, 2014.
Section 9 describes a performance-based maintenance process which can be used to justify maintenance intervals other than those described in Table 1.

Section 10 describes sections of the protection system, and overlapping considerations for full verification of the protection system by segments. Segments refer to pieces of the protection system, which can range from a single device to a panel to an entire substation.

Section 11 describes how relay operating records can serve as a basis for verification, reducing the frequency of manual testing.

Section 13 describes how a cooperative effort of relay manufacturers and protection system users can improve the coverage of self-monitoring functions, leading to full monitoring of the bulk of the protection system, and eventual elimination of manual verification or testing.

9. Performance-Based Maintenance Process

In lieu of using the Table 1 intervals, a performance-based maintenance process may be used to establish maintenance intervals~~.~~ *(PRC-005 Attachment A Criteria for a Performance-Based Protection System Maintenance Program*). A performance-based maintenance process may justify longer maintenance intervals, or require shorter intervals relative to Table 1. In order to use a performance-based maintenance process, the documented maintenance program must include records of repairs, adjustments, and corrections to covered protection systems in order to provide historical justification for intervals other than those established in Table 1. Furthermore, the asset owner must regularly analyze these records of corrective actions to develop a ranking of causes. Recurrent problems are to be highlighted, and remedial action plans are to be documented to mitigate or eliminate recurrent problems.

Utilities with performance-based maintenance track performance of protection systems, demonstrate how they analyze findings of performance failures and aberrations, and implement continuous improvement actions. Since no maintenance program can ever guarantee that no malfunction can possibly occur, documentation of a performance-based maintenance program would serve the utility well in explaining to regulators and the public a ~~misoperation~~Misoperation leading to a major system outage event.

A performance-based maintenance program requires auditing processes like those included in widely used industrial quality systems (such as ***ISO 9001-2000, Quality management systems — Requirements;*** or applicable parts of the NIST Baldridge National Quality Program). The audits periodically evaluate:

- The completeness of the documented maintenance process
- Organizational knowledge of and adherence to the process
- Performance metrics and documentation of results
- Remediation of issues
- Demonstration of continuous improvement.

In order to opt into a Performance ~~Based~~ -based Maintenance (PBM) program the asset owner must first sort the various Protection System components into population segments. Any population segment must be comprised of at least 60 individual units; if any asset owner opts for PBM but does not own 60 units to comprise a population then that asset owner may combine data from other asset owners until the needed 60 units is aggregated. Each population segment must be composed of like devices from the same manufacturer and subjected to similar environmental factors. For example: One segment cannot be comprised of both GE & Westinghouse electro-mechanical lock-out relays; likewise, one segment cannot be comprised of 60 GE lock-out relays, 30 of which are in a dirty environment and the remaining 30 from a clean environment.

9.1 Minimum Sample Size

Large Sample Size

An assumption that needs to be made when choosing a sample size is "the sampling distribution of the sample mean can be approximated by a normal probability distribution." The Central Limit Theorem states: "In selecting simple random samples of size *n* from a population, the sampling distribution of the sample mean *x* can be approximated by a normal probability distribution as the sample size becomes large." (Essentials of Statistics for Business and Economics, Anderson, Sweeney, Williams, 2003)

To use the Central Limit Theorem in statistics, the population size should be large. The references below are supplied to help define what is large.

> "… whenever we are using a large simple random sample (rule of thumb: n>=30), the central limit theorem enables us to conclude that the sampling distribution of the sample mean can be approximated by a normal distribution." (Essentials of Statistics for Business and Economics, Anderson, Sweeney, Williams, 2003)
>
> "If samples of size n, when n>=30, are drawn from any population with a mean *u* and a standard deviation σ, the sampling distribution of sample means approximates a normal distribution. The greater the sample size, the better the approximation." (Elementary Statistics - Picturing the World, Larson, Farber, 2003)
>
> "The sample size is large (generally n>=30)… (Introduction to Statistics and Data Analysis - Second Edition, Peck, Olson, Devore, 2005)
>
> "… the normal is often used as an approximation to the *t* distribution in a test of a null hypothesis about the mean of a normally distributed population when the population variance is estimated from a relatively large sample. A sample size exceeding 30 is often given as a minimal size in this connection." (Statistical Analysis for Business Decisions, Peters, Summers, 1968)

Error of Distribution Formula

Beyond the large sample size discussion above, a sample size requirement can be estimated using the bound on the Error of Distribution Formula when the expected result is of a "Pass/Fail" format and will be between 0 and 1.0.

The Error of Distribution Formula is:

$$B = z\sqrt{\frac{\pi(1-\pi)}{n}}$$

Where:
B = bound on the error of distribution (allowable error)
z = standard error
π = expected failure rate
n = sample size required

Solving for n provides:

$$n = \pi(1-\pi)\left(\frac{z}{B}\right)^2$$

Minimum Population Size to use Performance ~~Based~~-based Program

One entity's population of components should be large enough to represent a sizeable sample of a vendor's overall population of manufactured devices. For this reason the following assumptions are made:

B = 5%
z = 1.96 (This equates to a 95% confidence level)
π = 4%

Using the equation above, n=59.0.

Minimum Sample Size to evaluate Performance ~~Based~~-based Program

The number of components that should be included in a sample size for evaluation of the appropriate testing interval can be smaller because a lower confidence level is acceptable since the sample testing is repeated or updated annually. For this reason, the following assumptions are made:

B = 5%
z = 1.44 (85% confidence level)
π = 4%

Using the equation above, n=31.8.

Recommendation

Based on the above discussion, a sample size should be at least 30 to allow use of the equation mentioned. Using this and the results of the equation, the following numbers are recommended:

Minimum Population Size to use Performance~~-Based~~-based Maintenance Program = 60

Minimum Sample Size to evaluate Performance~~-Based~~-based Program = 30.

Once the population segment is defined then maintenance must begin within the intervals as outlined for Level 1 monitoring, (Table 1a). Time intervals can be lengthened provided the last year's worth of devices tested (or the last 30 units maintained, whichever is more) had fewer than 4% countable events. It is notable that 4% is specifically chosen because an entity with a small population (60 units) would have to adjust its time intervals between maintenance if more than 1 countable event was found to have occurred during the last analysis period. A smaller percentage would require that entity to adjust the time interval between maintenance activities if even one unit is found out of tolerance or causes a mis-operation.

The minimum number of units that can be tested in any given year is 5% of the population. Note that this 5% threshold sets a practical limitation on total length of time between intervals at 20 years.

If at any time the number of countable events equals or exceeds 4% of the last year's tested-devices (or the last 30 units maintained, whichever is more) then the time period between manual maintenance activities must be decreased. There is a time limit on reaching the decreased time at which the countable events is less than 4%; this must be attained within three years.

This additional time period of three years to restore segment performance to <4% countable events is mandated to keep entities from "gaming the PBM system". It is believed that this requirement provides the economic disincentives to discourage asset owners from arbitrarily pushing the PBM time intervals out to ~~20 years as subsequent analysis might show that an excessive number of countable events could then require that the entire population segment be re-tested and re-evaluated within 3 years.~~up to 20 years without proper statistical data.

10. Overlapping the Verification of Sections of the Protection System

Table 1 requires that every protection system element be periodically verified. One approach is to test the entire protection scheme as a unit, from voltage and current sources to breaker tripping. For practical ongoing verification, sections of the protection system may be tested or monitored individually. The boundaries of the verified sections must overlap to ensure that there are no gaps in the verification. See Appendix A for additional discussion on this topic.

All of the methodologies expressed within this report may be combined by an entity, as appropriate, to establish and operate a maintenance program. For example, a protection system may be divided into multiple overlapping sections with a different maintenance methodology for each section:

- Time-based maintenance with appropriate maximum verification intervals for categories of equipment as given in the Unmonitored, Partially Monitored, or Fully Monitored Tables;
- Full monitoring as described in header of Table 1c;

- A performance-based maintenance program as described in Section 9;
- Opportunistic verification using analysis of fault records as described in Section 11

11. Monitoring by Analysis of Fault Records

Many users of microprocessor relays retrieve fault event records and oscillographic records by data communications after a fault. They analyze the data closely if there has been an apparent ~~misoperation~~Misoperation, as NERC standards require. Some advanced users have commissioned automatic fault record processing systems that gather and archive the data. They search for evidence of component failures or setting problems hidden behind an operation whose overall outcome seems to be correct. The relay data may be augmented with independently captured digital fault recorder (DFR) data retrieved for the same event.

Fault data analysis comprises a legitimate CBM program that is capable of reducing the need for a manual time-interval based check on protection systems whose operations are analyzed. Even electromechanical protection systems instrumented with DFR channels may achieve some CBM benefit. The completeness of the verification then depends on the number and variety of faults in the vicinity of the relay that produce relay response records, and the specific data captured.

A typical fault record will verify particular parts of certain protection systems in the vicinity of the fault. For a given protection system installation, it may or may not be possible to gather within a reasonable amount of time an ensemble of internal and external fault records that completely verify the protection system.

For example, fault records may verify that the particular relays that tripped are able to trip via the control circuit path that was specifically used to clear that fault. A relay or DFR record may indicate correct operation of the protection communications channel. Furthermore, other nearby protection systems may verify that they restrain from tripping for a fault just outside their respective zones of protection. The ensemble of internal fault and nearby external fault event data can verify major portions of the protection system, and reset the time clock for the Table 1 testing intervals for the verified components only.

What can be shown from the records of one operation is very specific and limited. In a panel with multiple relays, only the specific relay(s) whose operation can be observed without ambiguity in the record and the associated wiring paths are verified. Be careful about using fault response data to verify that settings or calibration are correct. Unless records have been captured for multiple faults close to either side of a setting boundary, setting or calibration could still be incorrect.

If fault record data is used to show that portions or all of a protection system have been verified to meet Table 1 requirements, the owner must retain the fault records used, and the maintenance related conclusions drawn from this data and used to defer Table 1 tests, for at least the retention time interval given in Section 8.2.

12. Importance of Relay Settings in Maintenance Programs

In manual testing programs, many utilities depend on pickup value or zone boundary tests to show that the relays have correct settings and calibration. Microprocessor relays, by contrast, provide the means for continuously monitoring measurement accuracy. Furthermore, the relay digitizes inputs from one set of signals to perform all measurement functions in a single self-monitoring microprocessor system. These relays do not require testing or calibration of each setting.

However, incorrect settings may be a bigger risk with microprocessor relays than with older relays. Some microprocessor relays have hundreds or thousands of settings, many of which are critical to protection system performance.

Monitoring does not check measuring element settings. Analysis of fault records may or may not reveal setting problems. To minimize risk of setting errors after commissioning, the user should enforce strict settings data base management, with reconfirmation (manual or automatic) that the installed settings are correct whenever maintenance activity might have changed them. For background and guidance, see [5].

Table 1 requires that settings must be verified to be as specified. The reason for this requirement is simple. With legacy relays (non-microprocessor protective relays) it is necessary to know the value of the intended setting in order to test, adjust and calibrate the relay. Proving that the relay works per specified setting was the de facto procedure. However, with the advanced microprocessor relays it is possible to change relay settings for the purpose of verifying specific functions and then neglect to return the settings to the specified values. While there is no specific requirement to maintain a settings management process there remains a need to verify that the settings left in the relay are the intended, specified settings. This need may manifest itself after any of the following:

- One or more settings are changed for any reason.
- A relay fails and is repaired or replaced with another unit.
- A relay is upgraded with a new firmware version.

13. Self-Monitoring Capabilities and Limitations

Microprocessor relay proponents have cited the self-monitoring capabilities of these products for nearly 20 years. Theoretically, any element that is monitored does not need a periodic manual test. A problem today is that the community of manufacturers and users has not created clear documentation of exactly what is and is not monitored. Some unmonitored but critical elements are buried in installed systems that are described as self-monitoring.

Until users are able to document how all parts of a system which are required for the protective functions are monitored or verified (with help from manufacturers), they must continue with the unmonitored or partially monitored intervals established in Table 1.

Going forward, manufacturers and users can develop mappings of the monitoring within relays, and monitoring coverage by the relay of user circuits connected to the relay terminals.

To enable the use of full monitoring, the manufacturers of the microprocessor-based self-monitoring components in the protection system should publish for the user a document or map that shows:

- How all internal elements of the product are monitored for any failure that could impact protection system performance.
- Which connected circuits are monitored by checks implemented within the product; how to connect and set the product to assure monitoring of these connected circuits; and what circuits or potential problems are not monitored.

With this information in hand, the user can document full monitoring for some or all sections by:

- Presenting or referencing the product manufacturer's documents.
- Explaining in a system design document the mapping of how every component and circuit that is critical to protection is monitored by the microprocessor product(s) or by other design features.
- Extending the monitoring to include the alarm transmission facilities through which failures are reported ~~to remote centers for immediate action~~within a given time frame to

allocate where action can be taken to initiate resolution of the alarm attributed to a maintenance correctable issue, so that failures of monitoring or alarming systems also lead to alarms and action.

- Documenting the plans for verification of any unmonitored elements according to the requirements of Table 1.

14. Notification of Protection System Failures

When a failure occurs in a protection system, power system security may be compromised, and notification of the failure must be conducted in accordance with relevant NERC standard(s). Knowledge of the failure may impact the system operator's decisions on acceptable loading conditions.

This formal reporting of the failure and repair status to the system operator by the protection system owner also encourages the system owner to execute repairs as rapidly as possible. In some cases, a microprocessor relay or carrier set can be replaced in hours; wiring termination failures may be repaired in a similar time frame. On the other hand, a component in an electromechanical or early-generation electronic relay may be difficult to find and may hold up repair for weeks. In some situations, the owner may have to resort to a temporary protection panel, or complete panel replacement.

15. Maintenance Activities

Some specific maintenance activities are a requirement to ensure reliability. An example would be that a BES entity could be prudent in its protective relay maintenance but if its battery maintenance program is lacking then reliability could still suffer. The NERC glossary outlines a Protection System as containing specific components. PRC-005-02 requires specific maintenance activities be accomplished within a specific time interval. As noted previously, higher technology equipment can contain integral monitoring capability that actually performs maintenance verification activities routinely and often; therefore *manual intervention* to perform certain activities on these type devices may not be needed.

15.1 Protective Relays

These relays are defined as the devices that receive the input signal from the current and voltage sensing devices and are used to isolate a faulted portion of the BES. Devices that sense thermal, vibration, seismic, pressure, gas or any other non-electrical ~~input~~inputs are excluded.

Non-microprocessor based equipment is treated differently than microprocessor based equipment in the following ways, ~~but~~ the relays ~~must~~should meet the ~~calibration requirements of the~~ asset ~~owner~~owners' tolerances.

- Non-microprocessor devices must be tested with voltage and/or current applied to the device.
- Microprocessor devices may be tested through the integral testing of the device.
    - There is no specific protective relay commissioning test or relay routine test mandated.
    - There is no specific documentation mandated.

15.2 Voltage & Current Sensing Devices

These are the current and voltage sensing devices, usually known as instrument transformers. There is presently a technology available (fiber-optic Hall-effect) that does not utilize conventional transformer technology; these devices and other technologies that produce quantities that represent the primary values of voltage and current are considered to be a type of voltage and current sensing devices included in this standard.

The intent of the maintenance activity is to verify the input to the protective relay from the device that produces the current or voltage signal sample.

There is no specific test mandated for these devices. The important thing about these signals is to know that the expected output from these devices actually reaches the protective relay. Therefore, the proof of the proper operation of these devices also demonstrates the integrity of the wiring (or other medium used to convey the signal) from the current and voltage sensing device all the way to the protective relay. The following observations apply.

- There is no specific ratio test, routine test or commissioning test mandated.
- There is no specific documentation mandated.
- It is required that the signal be present at the relay.
- This expectation can be arrived at from any of a number of means; by calculation, by comparison to other circuits, by commissioning tests, by thorough inspection, or by any means needed to ~~prove~~verify the circuit ~~to the satisfaction of~~meets the asset ~~owner~~owner's protection system maintenance program.
- An example of testing might be a saturation test of a CT with the test values applied at the relay panel; this therefore tests the CT as well as the wiring from the relay all the back to the CT.
- Another possible test is to measure the signal from the voltage and/or current sensing devices, during load conditions, at the input to the relay.
- Another example of testing the various voltage and/or current sensing devices is to query the microprocessor relay for the real-time loading; this can then be compared to other devices to verify the quantities applied to this relay. Since the input devices have supplied the proper values to the protective relay then the verification activity has been satisfied. Thus event reports (and oscillographs) can be used to ~~prove~~verify that the voltage and current sensing devices are performing satisfactorily.
- Still another method is to measure total watts and vars around the entire bus; this should add up to zero watts and zero vars thus proving the voltage and/or current sensing devices system throughout the bus.
- Another method for proving the voltage and/or current sensing devices is to complete commissioning tests on all of the transformers, cabling, fuses and wiring.
- Other methods that provide documentation that the expected transformer values ~~are~~as applied to the inputs to the protective relays are acceptable.

15.3 DC Control Circuitry

This component of Protection Systems includes the trip coil(s) of the circuit breaker, circuit switcher or any other interrupting device. It includes the wiring from the batteries to the relays. It includes the wiring (or other signal conveyance) from every trip output to every trip coil. It includes any device needed for the correct processing of the needed trip signal to the trip coil of the interrupting device. In short, every trip path must be verified; the method of verification is optional to the asset owner. An example of testing methods to accomplish this might be to verify, with a volt-meter, the existence of the proper voltage at the open contacts and at the trip coil(s). As every parallel trip path has similar failure modes, each trip path from relay to trip coil must be verified. Each trip coil must be tested to trip the circuit breaker (or other interrupting device) at least once. There is a requirement to operate the circuit breaker (or other interrupting device) at least once every six years as part of the complete functional test. If a monitoring system is installed that verifies every parallel trip path then the manual-intervention testing of those parallel trip paths can be extended to twelve years, however the actual operation of the circuit breaker must still occur at least once every six years. This 6-year tripping requirement can be completed as easily as tracking the real-time fault-clearing operations on the circuit breaker.

The circuit-interrupting device should not be confused with a motor-operated disconnect. The intent of this standard is to require maintenance intervals and activities on Protection Systems equipment and not just all equipment.
It is necessary, however, to classify a device that actuates a high-speed auto-closing ground switch as an interrupting device if this ground switch is utilized in a Protection System and forces a ground fault to occur that then results in an expected Protection System operation to clear the forced ground fault.

Distribution circuit breakers that participate in the UFLS scheme are excluded from the trip-testing requirements. There are many circuit interrupting devices in the distribution system that will be operating for any given under-frequency event that requires tripping for that event. A failure in the tripping-action of a single distribution breaker will be far less significant than, for example, any single Transmission Protection System failure such as a failure of a Bus Differential Lock-Out Relay. While many failures of these distribution breakers could add up to be significant, it is also believed that distribution breakers are operated often on just fault clearing duty and therefore the distribution circuit breakers are operated at least as frequently as any requirements that might have appeared in this standard.

The dc control circuitry also includes each auxiliary tripping relay (94) and each lock-out relay (86) in any given trip scheme. These electro-mechanical devices must be trip tested. The PSMT SDT considers these devices to share some similarities in failure modes as electro-mechanical protective relays; as such there is a six year maximum interval between mandated maintenance tasks.

When verifying the operation of the 94 and 86 relays each normally-open contact that closes to pass a trip signal must be verified as operating correctly. Normally-open contacts that are not used to pass a trip signal and normally-closed contacts do not have to be verified. Verification of the tripping paths is the requirement.
New technology is also accommodated here; there are some tripping systems that have replaced the traditional hard-wired trip circuitry with other methods of trip-signal conveyance such as fiber-optics. It is the intent of the PSMT SDT to include this, and any other, technology that is used to convey a trip signal from a protective relay to a circuit breaker (or other interrupting device) within this category of equipment.

15.4 Batteries and DC Supplies

IEEE guidelines were ~~used~~consulted to ~~mandate~~arrive at the maintenance activities for batteries. The following guidelines were used: IEEE 450 (for Vented Lead-Acid batteries), IEEE 1188 (for Valve-Regulated Lead-Acid batteries) and IEEE 1106 (for Nickel-Cadmium batteries).

The present NERC definition of a Protection System is "*protective relays, associated communication systems, voltage and current sensing devices, station batteries and dc control circuitry*." The station battery is not the only component that provides dc power to a Protection System. In the new definition for Protection System "station batteries" are replaced with "station dc supply" to make the battery charger and dc producing stored energy devices (that are not a battery) part of the Protection System that must be maintained.

~~To insure that there are no open circuits in a lead acid battery string, IEEE 450-2002 recommends that during the monthly inspection "battery float charging current or pilot cell specific gravity" should be measured and recorded. Similarly IEEE 1188-2005 states that during the monthly general inspection, the "dc float current (per string)" should be checked and recorded "using equipment that is accurate at low (typically less than 1 A) currents." These tests are recommended by the IEEE standards for lead acid batteries to detect an open circuit in a battery set that will make a battery unable to deliver dc power.~~

The PSMT SDT recognizes that there are several technological advances in equipment and testing procedures that allow the owner to choose how to verify that a battery string is free of open circuits. The term "continuity" was introduced into the standard to allow the owner to choose how to verify continuity of a battery set by various methods, and not to limit the owner to the two methods recommended in the IEEE standards. Continuity as used in Table 1 of the standard refers to verifying that there is a continuous current path from the positive terminal of the station battery set to the negative terminal. Without verifying continuity of a station battery, there is no way to determine that the station battery is available to supply dc power to the station.

Batteries cannot be a unique population segment of a Performance~~-Based~~-based Maintenance Program (PBM) because there are too many variables in the electro-chemical process to completely isolate all of the performance-changing criteria necessary for using PBM on battery systems.

15.5 Tele-protection equipment

This is also known as associated telecommunications equipment. The equipment used for tripping in a communications assisted trip scheme is a vital piece of the trip circuit. Remote action causing a local trip can be thought of as another parallel trip path to the trip coil that must be tested.

Besides the trip output and wiring to the trip coil(s) there is also a communications medium that must be maintained.

Newer technologies now exist that achieve communications-assisted tripping without the conventional wiring practices of older technology.

For example: older technologies may have included *Frequency Shift Key* methods. This technology requires that guard and trip levels be maintained.

The actual tripping path(s) to the trip coil(s) may be tested as a parallel trip path within the dc control circuitry tests.

Emerging technologies transfer digital information over a variety of carrier mediums that are then interpreted locally as trip signals.

The requirements apply to the communicated signal needed for the proper operation of the protective relay trip logic or scheme. Therefore this standard is applied to equipment used to convey both trip signals and block signals.

It was the intent of this standard to require that a test be made of any communications-assisted trip scheme regardless of the vintage of the technology. The essential element is that the tripping occurs locally when the remote action has been asserted.

Evidence of operational test or documentation of measurement of signal level, reflected power or data-error rates is needed.

Some newer installations utilize digital signals over fiber-optics from the protective relays in the control house to the circuit interrupting device in the yard. This method of tripping the circuit breaker, even though it might be considered communications, must be maintained per the dc control circuitry maintenance requirements.

15.6 Examples of Evidence of Compliance

To comply with the requirements of this Standard an entity will have to document and save evidence. The evidence can be of many different forms. The Standard Drafting Team recognizes that there are concurrent evidence requirements of other standards that could, at times fulfill evidence requirements of this standard.

For example: maintaining evidence for operation of Special Protection Systems could concurrently be utilized as proof of the operation of the associated trip coil (provided one can be certain of the trip coil involved). Thus the reporting requirements that one may have to do for the misoperation of a Special Protection Scheme under PRC-016 could work for the activity tracking requirements under this PRC-005-2.

Another example might be:
Some entities maintain records of all interruptions. These records can be concurrently utilized, if the entity desires, as DC Trip Path verifications.

Analysis of Event Recordings can provide details that can eliminate some hands-on maintenance activities; however, merely printing out the event report provides limited benefit of verification of specific maintenance items.
Standardized-forms, hard or soft copy, can be created, filled out and archived. These forms can be of the entities' design and can be aimed at answering the specific requirements of the Standard as well as additional requirements as needed by the entity.
Fill-in blanks, check-boxes, drop-down lists, auto-date formats, etc. can all be used as the primary action is the maintenance activity; the secondary action is to verify that the maintenance activity was performed.
Other evidence of compliance might be, but is not limited to:
Prints, maintenance plans, training materials, policies, procedures, data print-outs or exhibits, correspondence, reports, data-base records, etc.
There is the legacy method of paper trail for everything, this is acceptable. There are also paperless systems existing and evolving that are also acceptable.
Proof of compliance should simply be the entities' records of maintenance completed.

16. References

NERC/SPCTF/Relay_Maintenance_Tech_Ref_approved_by_PC.pdf

1. "Predicating The Optimum Routine test Interval For Protection Relays," by J. J. Kumm, M.S. Weber, D. Hou, and E. O. Schweitzer, III, IEEE Transactions on Power Delivery, Vol. 10, No. 2, April 1995.
2. "Transmission Relay System Performance Comparison For 2000, 2001, 2002, 2003, 2004 and 2005," Working Group I17 of Power System Relaying Committee of IEEE Power Engineering Society, May 2006.
3. "A Survey of Relaying Test Practices," Special Report by WG I11 of Power System Relaying Committee of IEEE Power Engineering Society, September 16, 1999.
4. "Transmission Protective Relay System Performance Measuring Methodology," Working Group I3 of Power System Relaying Committee of IEEE Power Engineering Society, January 2002.
5. "Processes, Issues, Trends and Quality Control of Relay Settings," Working Group C3 of Power System Relaying Committee of IEEE Power Engineering Society, December 2006.
6. "Proposed Statistical Performance Measures for Microprocessor-Based Transmission-Line Protective Relays, Part I - Explanation of the Statistics, and Part II - Collection and Uses of Data," Working Group D5 of Power System Relaying Committee of IEEE Power Engineering Society, May 1995; Papers 96WM 016-6 PWRD and 96WM 127-1 PWRD, 1996 IEEE Power Engineering Society Winter Meeting.
7. "Analysis And Guidelines For Testing Numerical Protection Schemes," Final Report of CIGRE WG 34.10, August 2000.
8. "Use of Preventative Maintenance and System Performance Data to Optimize Scheduled Maintenance Intervals," H. Anderson, R. Loughlin, and J. Zipp, Georgia Tech Protective Relay Conference, May 1996.

PSMT SDT References

9. "Essentials of Statistics for Business and Economics" Anderson, Sweeney, Williams, 2003
10. "Introduction to Statistics and Data Analysis" - Second Edition, Peck, Olson, Devore, 2005
11. "Statistical Analysis for Business Decisions" Peters, Summers, 1968

Figures

Figure 1: Typical Transmission System

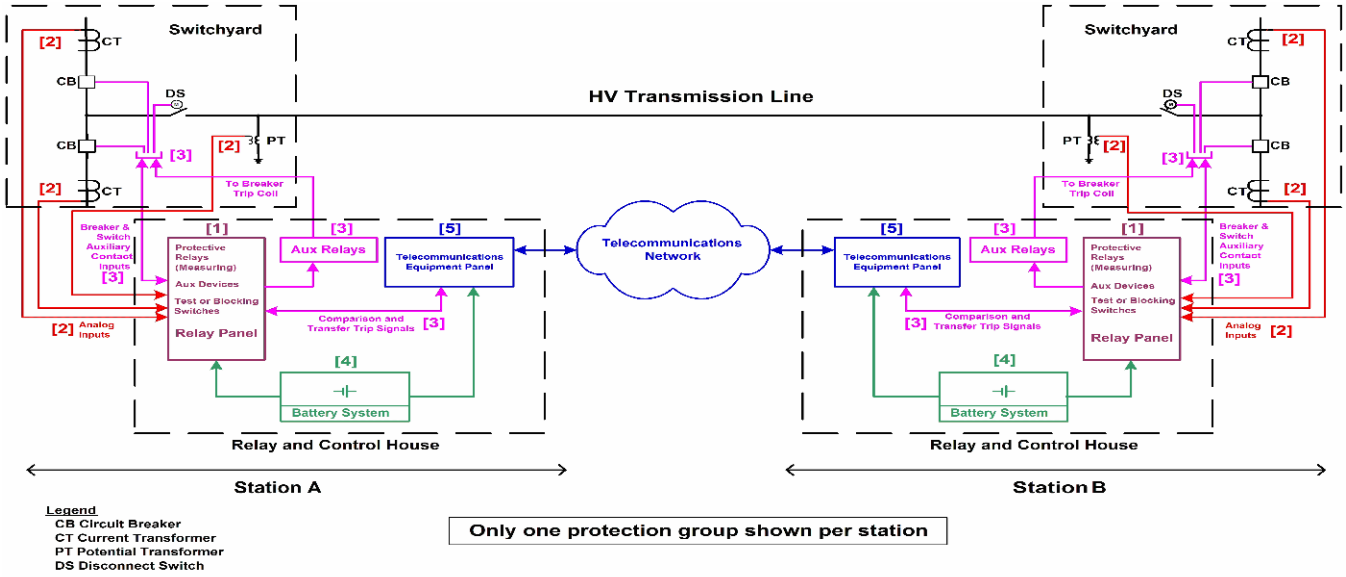

For information on numbered components, see ***Figure 1 & 2 Legend – Components of Protection Systems***

(Return)

Figure 2: Typical Generation System

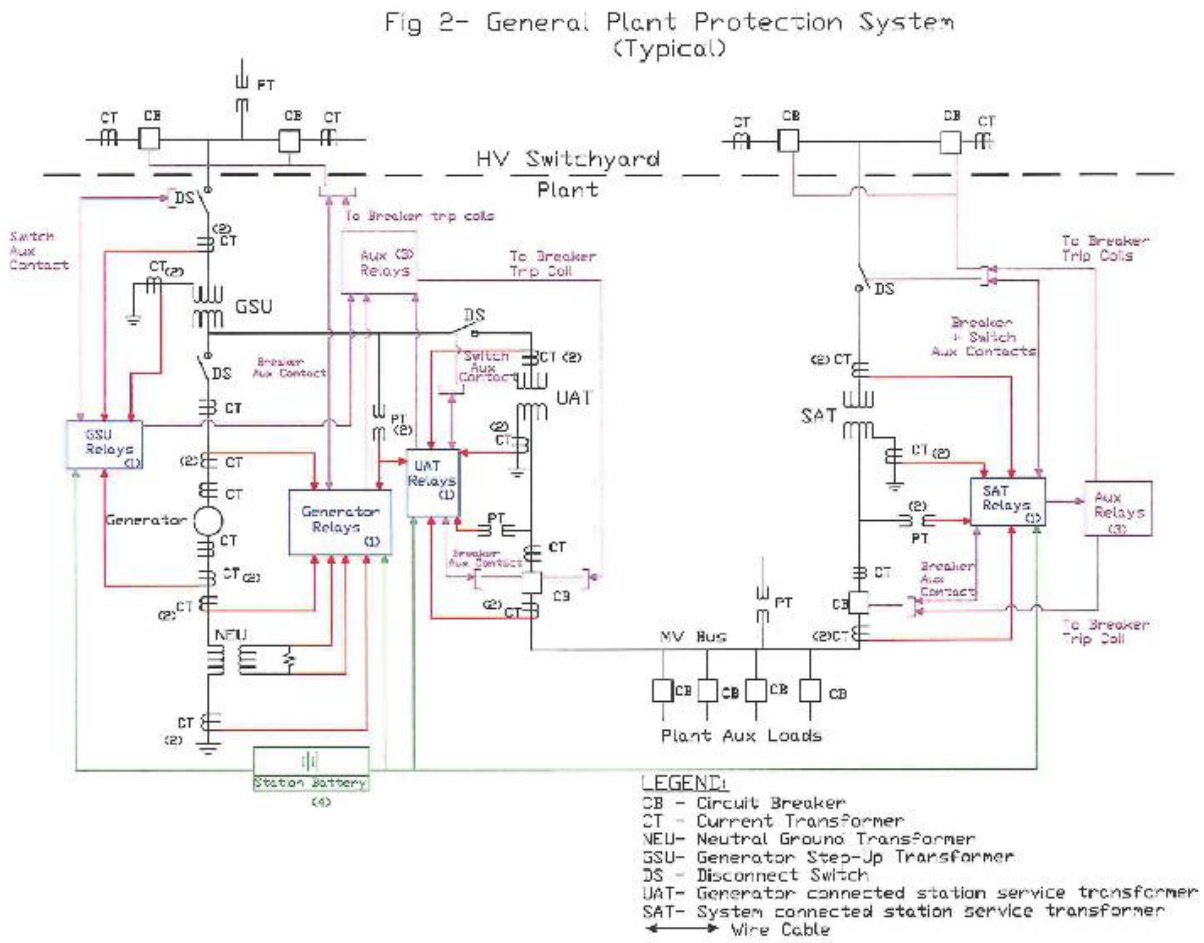

For information on numbered components, see ***Figure 1 & 2 Legend – Components of Protection Systems***

(Return)

Figure 1 ~~and~~& 2 Legend ~~—~~– Components of Protection Systems

Number In Figure	Component of Protection System	Includes	Excludes
1	Protective relays	All protective relays that use current and/or voltage inputs from current & voltage sensors and that trip the 86, 94 or trip coil.	Devices that use non-electrical methods of operation including thermal, pressure, gas accumulation, and vibration. Any ancillary equipment not specified in the definition of Protection systems. Control and/or monitoring equipment that is not a part of the automatic tripping action of the Protection System
2	Voltage & Current ~~& voltage sensors~~Sensing Devices and associated circuitry	~~Transformers or other~~The signals from the voltage & current ~~& voltage~~ sensing devices ~~that produce signals~~ for protective relays as well as the wiring (or other medium) used to convey signal output from the sensor to the protective relay input.	Voltage & current sensing devices that are not a part of the Protection System, including sync-check systems, metering systems and data acquisition systems.
3	DC Circuitry	All control wiring (or other medium for conveying trip signals) associated with the tripping action of 86 devices, 94 devices or trip coils (from all parallel trip paths). This would include fiber-optic systems that carry a trip signal as well as hard-wired systems that carry trip current. ~~Also, it includes auxiliary contacts providing breaker position data that is necessary for the proper operation of the Protection System.~~	Closing circuits, SCADA circuits
4	~~DC Supply~~Station dc supply	Batteries and battery chargers and any control power system which has the function of supplying power to the protective relays, associated trip circuits and trip coils.	Any power supplies that are not used to power protective relays or their associated trip circuits and trip coils.
5	Associated communications ~~equipment~~systems	Tele-protection equipment used to convey remote tripping action to a local trip coil or blocking signal to the trip logic (if applicable~~)~~).	Any communications equipment that is not used for remote tripping action to a local trip coil or blocking signal to the trip logic (if applicable~~)~~).

(Return)

Figure 3: Requirements Flowchart

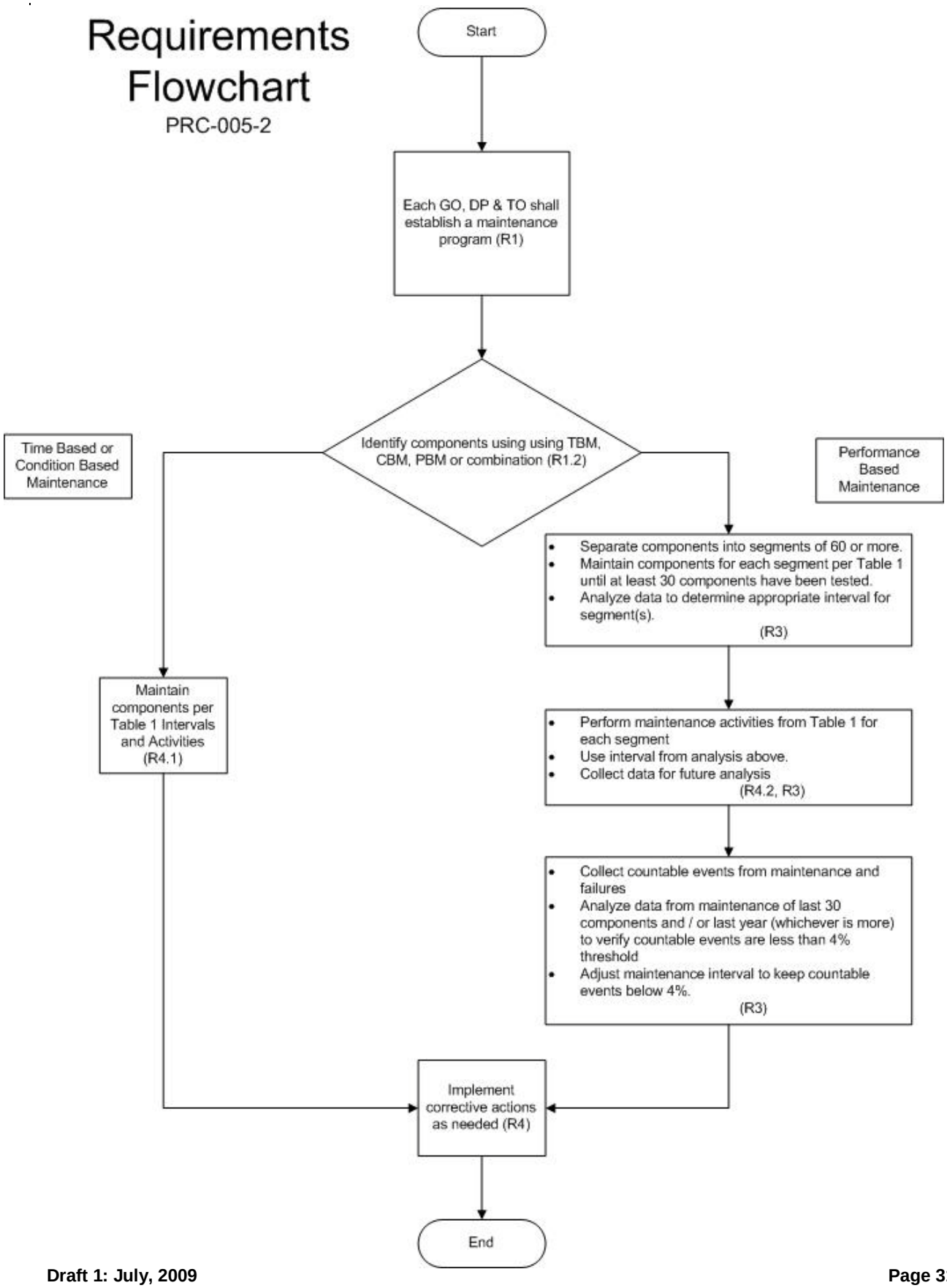

Requirements Flowchart

PRC-005-2

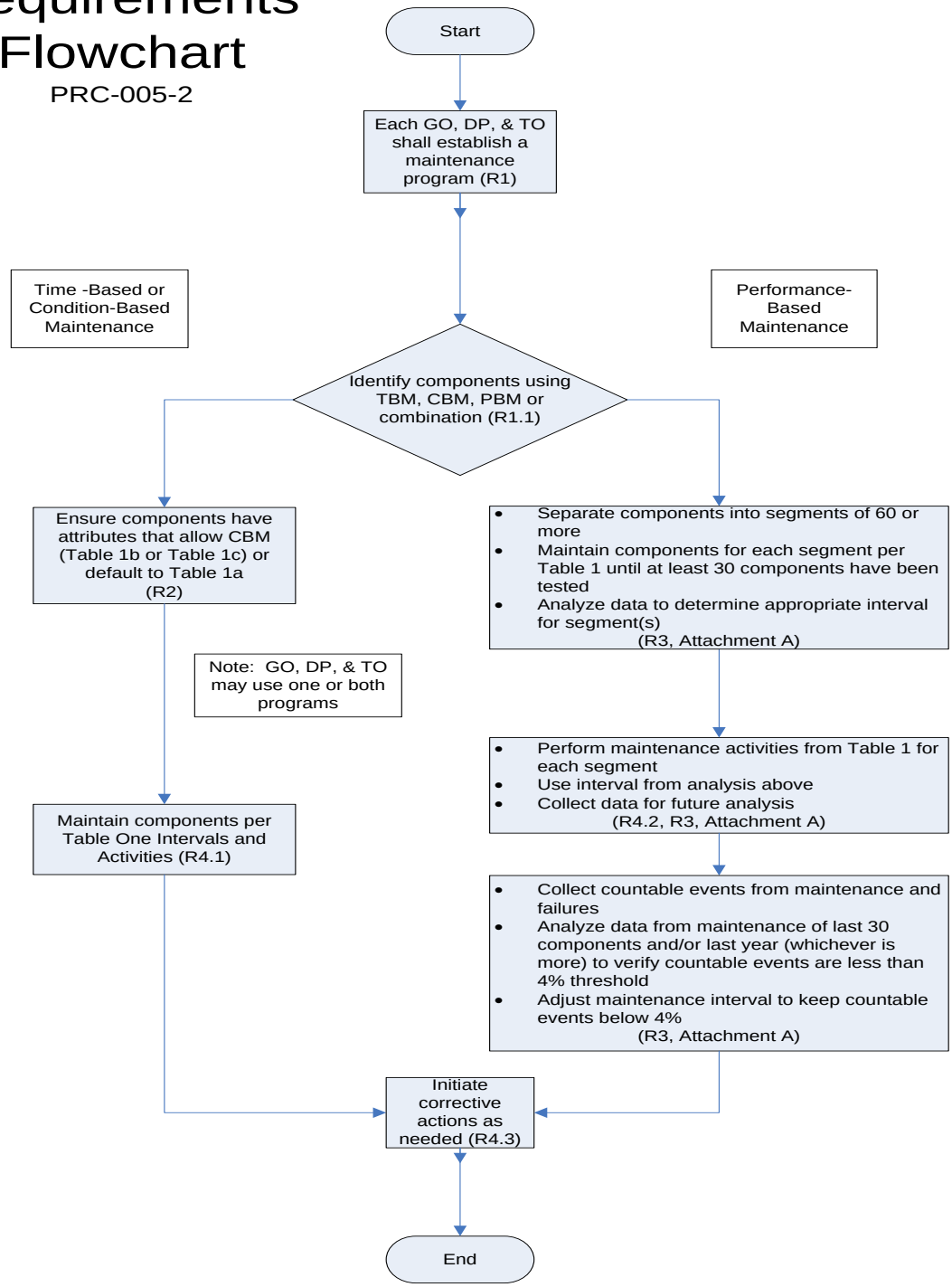

Appendix A

The following illustrates the concept of overlapping verifications and tests as summarized in Section 10 of the paper. As an example, Figure A-1 shows protection for a critical transmission line by carrier blocking directional comparison pilot relaying. The goal is to verify the ability of the entire two-terminal pilot protection scheme to protect for line faults, and to avoid over-tripping for faults external to the transmission line zone of protection bounded by the current transformer locations.

Figure A-1

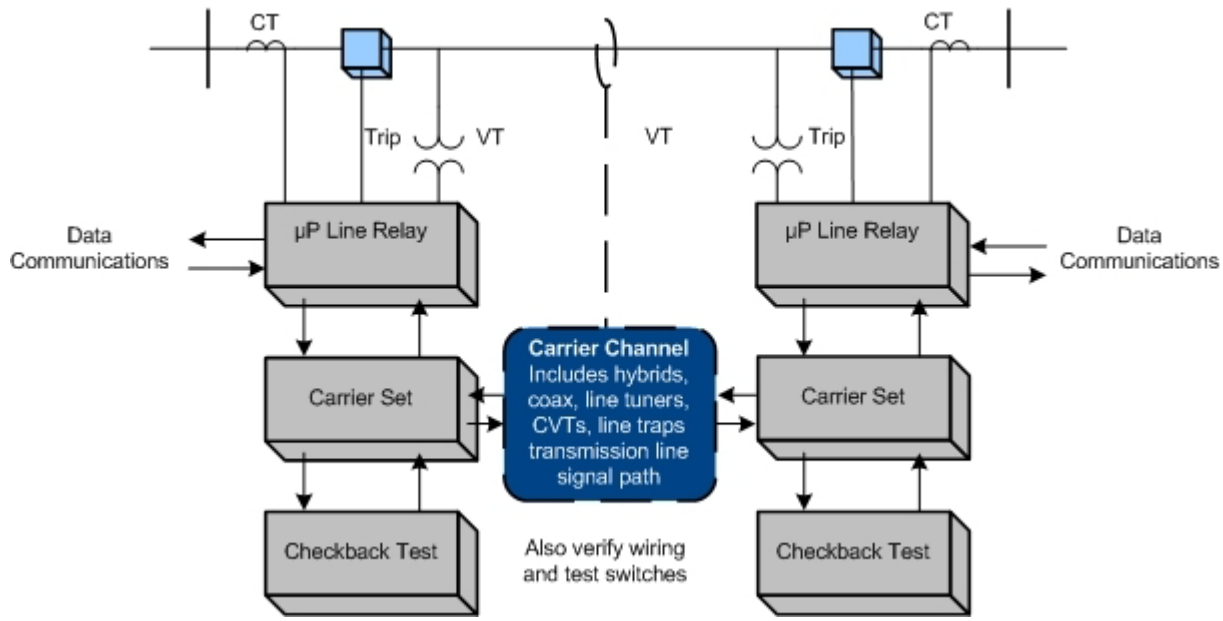

In this example (Figure A1), verification takes advantage of the self-monitoring features of microprocessor multifunction line relays at each end of the line. For each of the line relays themselves, the example assumes that the user has the following arrangements in place:

1. The relay has a data communications port that can be accessed from remote locations.
2. The relay has internal self-monitoring programs and functions that report failures of internal electronics, via communications messages or alarm contacts to SCADA.
3. The relays report loss of dc power, and the relays themselves or external monitors report the state of the dc battery supply.
4. The CT and PT inputs to the relays are used for continuous calculation of metered values of volts, amperes, plus Watts and VARs on the line. These metered values are reported by data communications. For maintenance, the user elects to compare these readings to those of other relays, meters, or DFRs. The other readings may be from redundant relaying or measurement systems or they may be derived from values in other protection zones. Comparison with other such readings to within required relaying accuracy verifies Voltage & Current Sensing

Devices, wiring, and analog signal input processing of the relays. One effective way to do this is to utilize the relay metered values directly in SCADA, where they can be compared with other references or state estimator values.

5. Breaker status indication from auxiliary contacts is verified in the same way as in (2). Status indications must be consistent with the flow or absence of current.
6. Continuity of the breaker trip circuit from dc bus through the trip coil is monitored by the relay and reported via communications.
7. Correct operation of the on-off carrier channel is also critical to security of the protection system, so each carrier set has a connected or integrated automatic checkback test unit. The automatic checkback test runs several times a day. Newer carrier sets with integrated checkback testing check for received signal level and report abnormal channel attenuation or noise, even if the problem is not severe enough to completely disable the channel.

These monitoring activities plus the check-back test comprise automatic verification of all the protection system elements that experience tells us are the most prone to fail. But, does this comprise a complete verification?

Figure A-2

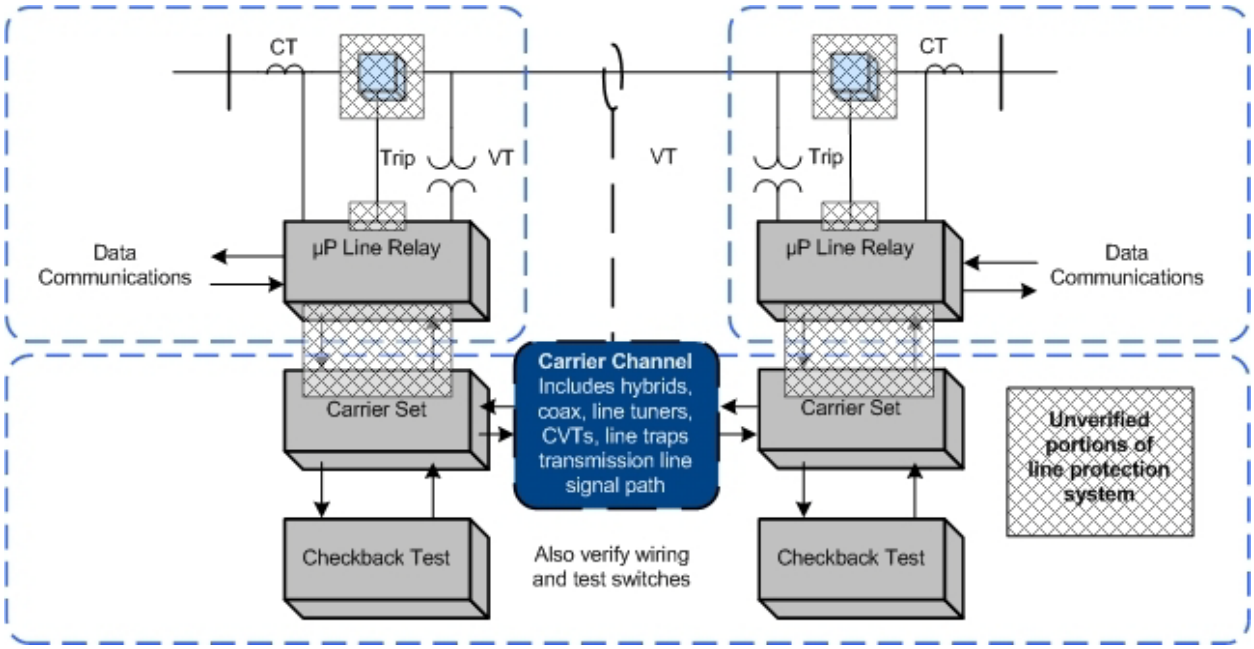

The dotted boxes of Figure A-2 show the sections of verification defined by the monitoring and verification practices just listed. These sections are not completely overlapping, and the shaded regions show elements that are not verified:

1. The continuity of trip coils is verified, but no means is provided for validating the ability of the circuit breaker to trip if the trip coil should be energized.

2. Within each line relay, all the microprocessors that participate in the trip decision have been verified by internal monitoring. However, the trip circuit is actually energized by the contacts of a small telephone-type "ice cube" relay within the line protective relay. The microprocessor energizes the coil of this ice cube relay through its output data port and a transistor driver circuit. There is no monitoring of the output port, driver circuit, ice cube relay, or contacts of that relay. These components are critical for tripping the circuit breaker for a fault.
3. The check-back test of the carrier channel does not verify the connections between the relaying microprocessor internal decision programs and the carrier transmitter keying circuit or the carrier receiver output state. These connections include microprocessor I/O ports, electronic driver circuits, wiring, and sometimes telephone-type auxiliary relays.
4. The correct states of breaker and disconnect switch auxiliary contacts are monitored, but this does not confirm that the state change indication is correct when the breaker or switch opens.

A practical solution for (1) and (2) is to observe actual breaker tripping, with a specified maximum time interval between trip tests. Clearing of naturally-occurring faults are demonstrations of operation that reset the time interval clock for testing of each breaker tripped in this way. If faults do not occur, manual tripping of the breaker through the relay trip output via data communications to the relay microprocessor meets the requirement for periodic testing.

PRC-005 does not address breaker maintenance, and its protection system test requirements can be met by energizing the trip circuit in a test mode (breaker disconnected) through the relay microprocessor. This can be done via a front-panel button command to the relay logic, or application of a simulated fault with a relay test set. However, utilities have found that breakers often show problems during protection system tests. It is recommended that protection system verification include periodic testing of the actual tripping of connected circuit breakers.

Testing of the relay-carrier set interface in (3) requires that each relay key its transmitter, and that the other relay demonstrate reception of that blocking carrier. This can be observed from relay or DFR records during naturally occurring faults, or by a manual test. If the checkback test sequence were incorporated in the relay logic, the carrier sets and carrier channel are then included in the overlapping segments monitored by the two relays, and the monitoring gap is completely eliminated.

~~**PRC-005-2**~~

Appendix B — Protection ~~Systems~~System Maintenance ~~& Testing~~ Standard Drafting Team

Charles W. Rogers ~~Chair~~
Chairman
Consumers Energy Co.

John B. Anderson
Xcel Energy

Merle E. Ashton
Tri-State ~~Generation & Transmission Assn, Inc.~~G&T

Bob Bentert
Florida Power & Light ~~Co.~~Company

John Ciufo
Hydro One~~,~~ Inc

~~Richard Ferner Western Area Power Administration~~

Sam Francis
Oncor

Carol A Gerou
Midwest Reliability Organization~~.~~

~~Roger D Green~~ William Shultz
Southern Company Generation

Russell C Hardison
Tennessee Valley Authority

David Harper
NRG Texas Maintenance Services

~~John Kruse Commonwealth Edison Co.~~

Mark Lukas
ComEd

Al McMeekin
NERC Staff
North American Electric Reliability Corporation

Mark Peterson
Great River Energy

William ~~D~~ Shultz
Southern Company Generation

Leonard Swanson, Jr
~~.~~ National Grid USA

Eric A Udren
Quanta Technology

Philip B Winston
Georgia Power Company

John A Zipp
ITC Holdings

NERC
NORTH AMERICAN ELECTRIC RELIABILITY CORPORATION

Protection System Definition

Current Approved Definition:

Protective relays, associated communication systems, voltage and current sensing devices, station batteries and DC control circuitry.

The drafting team initially proposed changes to the definition as shown below:

Protective relays, associated communication systems necessary for correct operation of protective devices, voltage and current sensing inputs to protective relays ~~devices~~, station DC supply ~~batteries~~, and DC control circuitry from the station DC supply through the trip coil(s) of the circuit breakers or other interrupting devices.

Based on stakeholder comments, the drafting team made minor changes to the proposed definition as shown below.

Protective relays, ~~associated~~ communication systems necessary for correct operation of protective ~~devices~~functions, voltage and current sensing inputs to protective relays and associated circuitry from the voltage and current sensing devices, station dc supply, and ~~DC~~ control circuitry associated with protective functions from the station dc supply through the trip coil(s) of the circuit breakers or other interrupting devices.

The proposed definition of Protection System reads as follows:

Protective relays, communication systems necessary for correct operation of protective functions, voltage and current sensing inputs to protective relays and associated circuitry from the voltage and current sensing devices, station dc supply, and control circuitry associated with protective functions from the station dc supply through the trip coil(s) of the circuit breakers or other interrupting devices.

			Original				Final				Issues/Directives Resolution	
											Met	Regulatory Filing Status
Source	Index	Directive Language (including pg #)	Project No	Standard No.	Coordinator	Transfer Reason or Disposition	Coordinator	Project No	Standard No.	Section and/or Requirement(s)	YES	Standard - ongoing (expected completion)
FERC Order 693	1082	1475. In addition, for the reasons discussed in the NOPR, the Commission directs the ERO to develop a modification to PRC-005-1 through the Reliability Standards development process that includes a requirement that maintenance and testing of a protection system must be carried out within a maximum allowable interval that is appropriate to the type of the protection system and its impact on the reliability of the Bulk-Power System.	2007-17	PRC-005-1	McMeekin	Specific maximum allowable intervals are included in the draft standard for time-based programs. Also adding requirement allowing either time-based or condition-based maintenance period Specific time intervals are included in the draft standard.	McMeekin	2007-17	PRC-005-2	R4.1 and Table 1a, Table 1b, and Table 1c	Yes	12/19/2012
FERC Order 693	1083	1475. We further direct the ERO to consider FirstEnergy's and ISO-NE's suggestion to combine PRC-005-1, PRC-008-0, PRC-011-0 and PRC-017-0 into a single Reliability Standard through the Reliability Standards development process.	2007-17	PRC-005-1	McMeekin	These suggestions were adopted. The SDT is combining the four legacy standards into one.	McMeekin	2007-17	PRC-005-2	R4.1 and Table 1a, Table 1b, and Table 1c	Yes	12/19/2012
FERC Order 693	1088	1492. In addition, the Commission directs the ERO to develop a modification to PRC-008-0 through the Reliability Standards development process that includes a requirement that maintenance and testing of a protection system must be carried out within a maximum allowable interval that is appropriate to the type of the protection system and its impact on the reliability of the Bulk-Power System.	2007-17	PRC-008-0	McMeekin	Specific maximum allowable intervals are included in the draft standard for time-based programs. Also adding requirement allowing either time-based or condition-based maintenance period. Specific time intervals are included in the draft standard.	McMeekin	2007-17	PRC-005-2	R4.1 and Table 1a, Table 1b, and Table 1c	Yes	12/19/2012
FERC Order 693	1093	1516. The Commission believes that the proposal is presently part of the process. The Commission approves Reliability Standard PRC-011-0 as mandatory and enforceable. In addition, the Commission directs the ERO to submit a modification to PRC-011-0 through the Reliability Standards development process that includes a requirement that maintenance and testing of a protection system must be carried out within a maximum allowable interval that is appropriate to the type of the protection system and its impact on the reliability of the Bulk-Power System.	2007-17	PRC-011-0	McMeekin	Specific maximum allowable intervals are included in the draft standard for time-based programs. Also adding requirement allowing either time-based or condition-based maintenance period. Specific time intervals are included in the draft standard.	McMeekin	2007-17	PRC-005-2	R4.1 and Table 1a, Table 1b, and Table 1c	Yes	12/19/2012

Source	Index	Directive Language (including pg #)	Project No	Standard No.	Coordinator	Transfer Reason or Disposition	Coordinator	Project No	Standard No.	Section and/or Requirement(s)	YES	Standard - ongoing (expected completion)
FERC Order 693	1103	1546. The Commission approves Reliability Standard PRC-017-0 as mandatory and enforceable. In addition, the Commission directs the ERO to develop a modification to PRC-017-0 through the Reliability Standards development process, that includes: (1) a requirement that maintenance and testing of a protection system must be carried out within a maximum allowable interval that is appropriate for the type of the protection system...	2007-17	PRC-017-0	McMeekin	Specific maximum allowable intervals are included in the draft standard for time-based programs. Also adding requirement allowing either time-based or condition-based maintenance period. Specific time intervals are included in the draft standard	McMeekin	2007-17	PRC-005-2	R4.1 and Table 1a, Table 1b, and Table 1c	Yes	12/19/2012
FERC Order 693	1104	1546. In addition, the Commission directs the ERO to develop a modification to PRC-017-0 through the Reliability Standards development process, that includes: ...(2) a requirement that documentation identified in Requirement R2 shall be routinely provided to the ERO or Regional Entity.	2007-17	PRC-017-0	McMeekin	Transferred within Issues Database to Project 2010-05 that will address PRC-012-0 and other SPS standards. The directive is referencing documentation of the actual SPSs – primarily their design and	Unknown	2010-05	PRC-012-0			12/19/2012
Version 0 Team		Not a standalone standard	2007-17	PRC-005-1	McMeekin	The SDT is combining the four legacy standards into one	McMeekin	2007-17	PRC-005-2	R4.1 and Table 1a, Table 1b, and Table 1c	Yes	12/19/2012
Version 0 Team		Include breakers/switches in list	2007-17	PRC-005-1	McMeekin	Breakers/switches are specifically NOT included in the Protection System definition, and therefore are NOT addressed in the draft standard.	McMeekin	2007-17	PRC-005-2		Yes	12/19/2012
Version 0 Team		Define evidence	2007-17	PRC-005-1	McMeekin	Requirement R4 states that the program must be implemented. Evidence that the program is implemented is included in the Measure M4.	McMeekin	2007-17	PRC-005-2	M1, M2, M3, and M4 all contain examples of evidence	Yes	12/19/2012
Version 0 Team		Definition of evidence required	2007-17	PRC-008-0	McMeekin	Requirement R4 states that the program must be implemented. Evidence that the program is implemented is included in the Measure M4.	McMeekin	2007-17	PRC-005-2	M1, M2, M3, and M4 all contain examples of evidence	Yes	12/19/2012
Version 0 Team		Consistent wording from standard to standard required	2007-17	PRC-008-0	McMeekin	The SDT is combining the four legacy standards into one	McMeekin	2007-17	PRC-005-2	R4.1 and Table 1a, Table 1b, and Table 1c	Yes	12/19/2012
Version 0 Team		Exemptions for those with shunt reactors	2007-17	PRC-011-0	McMeekin	UV Relays on shunt reactors is not UVLS; these relays would be included as pertinent to relays "applied on or to protect the BES".	McMeekin	2007-17	PRC-005-2		Yes	12/19/2012

Source	Index	Directive Language (including pg #)	Project No	Standard No.	Coordinator	Transfer Reason or Disposition	Coordinator	Project No	Standard No.	Section and/or Requirement(s)	YES	Standard - ongoing (expected completion)
Version 0 Team		Define evidence	2007-17	PRC-011-0	McMeekin	Requirement R4 states that the program must be implemented. Evidence that the program is implemented is included in the Measure M4.	McMeekin	2007-17	PRC-005-2	M1, M2, M3, and M4 all contain examples of evidence	Yes	12/19/2012
Version 0 Team		Need to retain two dates	2007-17	PRC-017-0	McMeekin	The Standard requires that data be retained for the last two maintenance intervals or to the last audit, whichever is longer.	McMeekin	2007-17	PRC-005-2	See data retention clause	Yes	12/19/2012
Version 0 Team		Define evidence	2007-17	PRC-017-0	McMeekin	Requirement R4 states that the program must be implemented. Evidence that the program is implemented is included in the Measure M4.	McMeekin	2007-17	PRC-005-2	M1, M2, M3, and M4 all contain examples of evidence	Yes	12/19/2012
NERC Audit Observation Team		How do you verify compliance for for cts/pts? How do you audit these within a scheduled maintenance program. As part of the procedure, most have accepted visual inspection. Some entities state that testing of the relays verify functionality of the ct/pt.	2007-17	PRC-005-1	McMeekin	Records must be maintained -- records only means of proof it was done. Verification activities in Table 1 establishes the activities required for the voltage and current sensing inputs to protective relays and associated circuitry from the voltage and current sensing devices.	McMeekin	2007-17	PRC-005-2	Specific activities have been defined within Table 1a, Table 1b, and Table 1c.	Yes	12/19/2012
NERC Audit Observation Team		How do you verify DC control power? All regions require functional testing of the breaker. This should include functional relay & station battery checks, including breaker tripping, not just a visual inspection.	2007-17	PRC-005-1	McMeekin	Specific verification activities are establised in Table 1.	McMeekin	2007-17	PRC-005-2	Specific activities have been defined within Table 1a, Table 1b, and Table 1c.	Yes	12/19/2012
NERC Audit Observation Team		Determine what on schedule means. Is an entity who maintained/tested 95% of their relays at the same level of non-compliance as an entity who maintained/tested 10% of their relays?	2007-17	PRC-005-1	McMeekin	The VSL for maintenance program implementation (Requirement R4) establishes different VSLs depending on the degree to which the program is implemented.	McMeekin	2007-17	PRC-005-2	See Phased=in VSLs for R4	Yes	12/19/2012
NERC Audit Observation Team	All	As applicable, each TO,DP and GOP shall have a protection system maintenance and testing program for protection systems that affect the reliability of the BES. Does this include major equipment like circuit breakers and transformers?	2007-17	PRC-005-1	McMeekin	Maintenance of **Protection Systems** on all BES equipment are included within this standard.	McMeekin	2007-17	PRC-005-2	See definition of Protecton System.	Yes	12/19/2012

Source	Index	Directive Language (including pg #)	Project No	Standard No.	Coordinator	Transfer Reason or Disposition	Coordinator	Project No	Standard No.	Section and/or Requirement(s)	YES	Standard - ongoing (expected completion)
Fill in the Blank Team		Okay if PRC-006 is fixed	2007-17	PRC-008-0	McMeekin	Applicability section of PRC-005-2 (4.2.2) establishes applicability to UFLS established in accordance with ERO requirements.	McMeekin	2007-17	PRC-005-2	R4.1 and Table 1a, Table 1b, and Table 1c	Yes	12/19/2012
Phase III/IV Team		All protection systems on the bulk electric system.	2007-17	PRC-005-1	McMeekin	The Applicabilty section of the standard defines the facilities to which the standard applies.	McMeekin	2007-17	PRC-005-2	Applicability	Yes	12/19/2012
Phase III/IV Team		PRC 003 to 005 only address generator (and transmission) protective systems, without defining this term.	2007-17	PRC-005-1	McMeekin	The applicability section addresses Protection Systems that are "applied on, or designed to protect the BES", and provides additional specificity regarding applicable generator Protection Systems.	McMeekin	2007-17	PRC-005-2	Applicability	Yes	12/19/2012
Phase III/IV Team		Need to add language to ensure the Regional Requirements focus on the most impactive scenarios	2007-17	PRC-005-1	McMeekin	The draft standard establishes minimim ERO-wide requirements; any Regional requirements would have to exceed the ERO requirements.	McMeekin	2007-17	PRC-005-2		Yes	12/19/2012
Phase III/IV Team		Modify applicability to clarfify that the requirements are applicable to the following:	2007-17	PRC-005-1	McMeekin	The applicability section has been modified.	McMeekin	2007-17	PRC-005-2	Applicability	Yes	12/19/2012
Phase III/IV Team		All generation protection systems whose misoperations impact the bulk electric system	2007-17	PRC-005-1	McMeekin	Specificity is provided in 4.2.5 addressing Protection Systems for generator facilities.	McMeekin	2007-17	PRC-005-2	R4.2.5	Yes	12/19/2012
Phase III/IV Team		There is no performance requirement or measure of effectiveness of a maintenance program required by the standard	2007-17	PRC-005-1	McMeekin	For Time-Based (or Condition-Based) maintenance, minimum activities and maximum intervals are specified; for performance-based maintenance, performance (or effectiveness) goals are established.	McMeekin	2007-17	PRC-005-2	R3 and Attachment A	Yes	12/19/2012

NERC
NORTH AMERICAN ELECTRIC RELIABILITY CORPORATION

Standards Announcement

Initial Ballot Windows Open
July 8–17, 2010

Now available at: https://standards.nerc.net/CurrentBallots.aspx

Project 2007-17: Protection System Maintenance and Testing

An initial ballot window for standard PRC-005-2 — Protection System Maintenance and Testing and a separate initial ballot for the definition of "Protection System" are now open **until 8 p.m. Eastern on July 17, 2010**.

In addition, members of the ballot pool associated with the standard will be able to vote in a concurrent non-binding poll on the standard's Violation Risk Factors (VRFs) and Violation Severity Levels (VSLs). Members who joined the ballot pool to vote on the standard were automatically entered in a separate pool to participate in the non-binding poll for the VRFs and VSLs. The non-binding poll will appear in your list of current ballots, and is labeled accordingly. (As a reminder, this new approach for VRFs and VSLs is one of the updates reflected in the recently FERC-approved Reliability Standards Development Procedure — Version 7.)

Instructions

Members of the ballot pools associated with this project may log in and submit their votes from the following page: https://standards.nerc.net/CurrentBallots.aspx

Next Steps

Voting results will be posted and announced after the ballot windows close.

Project Background

The draft standard combines the following previous standards:

- PRC-005-1 — Transmission and Generation Protection System Maintenance and Testing
- PRC-008-0 — Underfrequency Load Shedding Equipment Maintenance Program
- PRC-011-0 — UVLS System Maintenance and Testing
- PRC-017-0 — Special Protection System Maintenance and Testing

The proposed standard addresses FERC directives from FERC Order 693 as well as issues identified by stakeholders. In accordance with the FERC directives, this draft standard establishes requirements for a time-based maintenance program, where all relevant devices are

116-390 Village Blvd.
Princeton, NJ 08540
609.452.8060 | www.nerc.com

maintained according to prescribed maximum intervals. It further establishes requirements for a condition-based maintenance program, where the hands-on maintenance intervals are adjusted to reflect the known and reported condition of the relevant devices, and for a performance-based maintenance program, where the hands-on maintenance intervals are adjusted to reflect the historical performance of the relevant devices.

Project page:
http://www.nerc.com/filez/standards/Protection_System_Maintenance_Project_2007-17.html

Special Notes:
On March 18, 2010, FERC issued several orders and notices of proposed rulemakings pertaining to standards development activities and processes, suggesting a lack of progress in responding to directives from Order 693 as well in the timeliness of standards development in general. At the May 2010 NERC Board meeting, Gerry Cauley, NERC's President, also expressed these concerns, indicating that the resolution to these concerns is one of NERC's top priorities in the near term. As a result, the Standards Committee has authorized deviations from the normal standards development process for the Protection System Maintenance and Testing project, as well as other projects that have been through significant stakeholder review through the development process, to demonstrate that the NERC enterprise is responsive to FERC directives, and is making progress in developing new standards.

The Standards Committee approved the following deviations from the standards development process:

- The proposed changes to the standard and definition will be posted for 35-day comment periods (rather than 45-day comment periods). The ballot pools will be formed during the first 21 days of the 35-day comment periods;
- The initial ballots will be conducted during the last 10 days of the 35-day comment periods; and
- The drafting team may make modifications between the initial and recirculation ballots based on stakeholder comments to improve the overall quality of the standard and definition.

Applicability of Standards in Project
Transmission Owners
Generator Owners
Distribution Providers

Standards Development Process
The Reliability Standards Development Procedure contains all the procedures governing the standards development process. The success of the NERC standards development process depends on stakeholder participation. We extend our thanks to all those who participate.

NERC
NORTH AMERICAN ELECTRIC RELIABILITY CORPORATION

Standards Announcement

Ballot Pools and Pre-ballot Windows (with Comment Periods)
Project 2007-17: Protection System Maintenance and Testing

Project 2007-17: Protection System Maintenance and Testing

On March 18, 2010, FERC issued several orders and notices of proposed rulemakings pertaining to standards development activities and processes, suggesting a lack of progress in responding to directives from Order 693 as well in the timeliness of standards development in general. At the May 2010 NERC Board meeting, Gerry Cauley, NERC's President, also expressed these concerns, indicating that the resolution to these concerns is one of NERC's top priorities in the near term. As a result, the Standards Committee has authorized deviations from the normal standards development process for the Protection System Maintenance and Testing project, as well as other projects that have been through significant stakeholder review through the development process, to demonstrate that the NERC enterprise is responsive to FERC directives, and is making progress in developing new standards.

The Standards Committee approved the following deviations from the standards development process:

- The proposed changes to the standard and definition will be posted for 35-day comment periods (rather than 45-day comment periods). The ballot pools will be formed during the first 21 days of the 35-day comment periods;
- The initial ballots will be conducted during the last 10 days of the 35-day comment periods; and
- The drafting team may make modifications between the initial and recirculation ballots based on stakeholder comments to improve the overall quality of the standard and definition.

Ballot Pools (through July 2, 2010)

- There will be two ballot pools: one for the standard (PRC-005-2), which includes the proposed definition of "Protection System Maintenance Program" and a separate ballot pool for the proposed definition of "Protection System."

116-390 Village Blvd.
Princeton, NJ 08540
609.452.8060 | www.nerc.com

- Registered Ballot Body members may join the ballot pools **until 8 a.m. Eastern on July 2, 2010** to be eligible to vote in the upcoming ballots at the following page: https://standards.nerc.net/BallotPool.aspx. Members who join the ballot pool to vote on the standard (PRC-005-2) will automatically be entered in a separate pool to participate in the non-binding poll of the associated violation risk factors (VRFs) and violation severity levels (VSLs). (As a reminder, this new approach for VRFs and VSLs is one of the updates reflected in the recently FERC-approved Reliability Standards Development Procedure – Version 7.)

- During the pre-ballot window, members of the ballot pools may communicate with one another by using their "ballot pool list server." (Once the balloting begins, ballot pool members are prohibited from using the ballot pool list servers.) The ballot pool list server for PRC-005-2 and "Protection System Maintenance Program" is: bp-2007-17_PRC-005-2_in@nerc.com. The ballot pool list server for the proposed definition of "Protection System" is: bp-2007-17_definition_in@nerc.com.

Comment Periods (through July 16, 2010)

There will also be two comment periods: one for the standard (PRC-005-2), which includes the proposed definition of "Protection System Maintenance Program" and a separate comment period for the proposed definition of "Protection System."

Please use this electronic form to submit comments on PRC-005-2 and "Protection System Maintenance Program." Please use this electronic form to submit comments on "Protection System." If you experience any difficulties in using the electronic forms, please contact Lauren Koller at 609-524-7047.

Documents for this project — including an off-line, unofficial copy of the questions listed in the comment forms — are posted at the following site:
http://www.nerc.com/filez/standards/Protection_System_Maintenance_Project_2007-17.html

Project Background

The draft standard combines the following previous standards:

- PRC-005-1 — Transmission and Generation Protection System Maintenance and Testing
- PRC-008-0 — Underfrequency Load Shedding Equipment Maintenance Program
- PRC-011-0 — UVLS System Maintenance and Testing
- PRC-017-0 — Special Protection System Maintenance and Testing

The proposed standard addresses FERC directives from FERC Order 693 as well as issues identified by stakeholders. In accordance with the FERC directives, this draft standard establishes requirements for a time-based maintenance program, where all relevant devices are maintained according to prescribed maximum intervals. It further establishes requirements for a condition-based maintenance program, where the hands-on maintenance intervals are adjusted to reflect the known and reported condition of the relevant devices, and for a performance-based maintenance program, where the hands-on maintenance intervals are adjusted to reflect the historical performance of the relevant devices.

Further details are available on the project page:
http://www.nerc.com/filez/standards/Protection_System_Maintenance_Project_2007-17.html

Applicability of Standards in Project:
Transmission Owners
Generator Owners
Distribution Providers

Standards Development Process
The *Reliability Standards Development Procedure* contains all the procedures governing the standards development process. The success of the NERC standards development process depends on stakeholder participation. We extend our thanks to all those who participate.

For more information or assistance, please contact Courtney Camburn at Courtney.Camburn@nerc.net

NERC
NORTH AMERICAN ELECTRIC RELIABILITY CORPORATION

Standards Announcement

Ballot Pools and Pre-ballot Windows (with Comment Periods)
Project 2007-17: Protection System Maintenance and Testing

Project 2007-17: Protection System Maintenance and Testing

On March 18, 2010, FERC issued several orders and notices of proposed rulemakings pertaining to standards development activities and processes, suggesting a lack of progress in responding to directives from Order 693 as well in the timeliness of standards development in general. At the May 2010 NERC Board meeting, Gerry Cauley, NERC's President, also expressed these concerns, indicating that the resolution to these concerns is one of NERC's top priorities in the near term. As a result, the Standards Committee has authorized deviations from the normal standards development process for the Protection System Maintenance and Testing project, as well as other projects that have been through significant stakeholder review through the development process, to demonstrate that the NERC enterprise is responsive to FERC directives, and is making progress in developing new standards.

The Standards Committee approved the following deviations from the standards development process:

- The proposed changes to the standard and definition will be posted for 35-day comment periods (rather than 45-day comment periods). The ballot pools will be formed during the first 21 days of the 35-day comment periods;
- The initial ballots will be conducted during the last 10 days of the 35-day comment periods; and
- The drafting team may make modifications between the initial and recirculation ballots based on stakeholder comments to improve the overall quality of the standard and definition.

Ballot Pools (through July 2, 2010)

- There will be two ballot pools: one for the standard (PRC-005-2), which includes the proposed definition of "Protection System Maintenance Program" and a separate ballot pool for the proposed definition of "Protection System."

116-390 Village Blvd.
Princeton, NJ 08540
609.452.8060 | www.nerc.com

- Registered Ballot Body members may join the ballot pools **until 8 a.m. Eastern on July 2, 2010** to be eligible to vote in the upcoming ballots at the following page: https://standards.nerc.net/BallotPool.aspx. Members who join the ballot pool to vote on the standard (PRC-005-2) will automatically be entered in a separate pool to participate in the non-binding poll of the associated violation risk factors (VRFs) and violation severity levels (VSLs). (As a reminder, this new approach for VRFs and VSLs is one of the updates reflected in the recently FERC-approved Reliability Standards Development Procedure – Version 7.)

- During the pre-ballot window, members of the ballot pools may communicate with one another by using their "ballot pool list server." (Once the balloting begins, ballot pool members are prohibited from using the ballot pool list servers.) The ballot pool list server for PRC-005-2 and "Protection System Maintenance Program" is: bp-2007-17_PRC-005-2_in@nerc.com. The ballot pool list server for the proposed definition of "Protection System" is: bp-2007-17_definition_in@nerc.com.

Comment Periods (through July 16, 2010)

There will also be two comment periods: one for the standard (PRC-005-2), which includes the proposed definition of "Protection System Maintenance Program" and a separate comment period for the proposed definition of "Protection System."

Please use this electronic form to submit comments on PRC-005-2 and "Protection System Maintenance Program." Please use this electronic form to submit comments on "Protection System." If you experience any difficulties in using the electronic forms, please contact Lauren Koller at 609-524-7047.

Documents for this project — including an off-line, unofficial copy of the questions listed in the comment forms — are posted at the following site:
http://www.nerc.com/filez/standards/Protection_System_Maintenance_Project_2007-17.html

Project Background

The draft standard combines the following previous standards:

- PRC-005-1 — Transmission and Generation Protection System Maintenance and Testing
- PRC-008-0 — Underfrequency Load Shedding Equipment Maintenance Program
- PRC-011-0 — UVLS System Maintenance and Testing
- PRC-017-0 — Special Protection System Maintenance and Testing

The proposed standard addresses FERC directives from FERC Order 693 as well as issues identified by stakeholders. In accordance with the FERC directives, this draft standard establishes requirements for a time-based maintenance program, where all relevant devices are maintained according to prescribed maximum intervals. It further establishes requirements for a condition-based maintenance program, where the hands-on maintenance intervals are adjusted to reflect the known and reported condition of the relevant devices, and for a performance-based maintenance program, where the hands-on maintenance intervals are adjusted to reflect the historical performance of the relevant devices.

Further details are available on the project page:
http://www.nerc.com/filez/standards/Protection_System_Maintenance_Project_2007-17.html

Applicability of Standards in Project:
Transmission Owners
Generator Owners
Distribution Providers

Standards Development Process
The *Reliability Standards Development Procedure* contains all the procedures governing the standards development process. The success of the NERC standards development process depends on stakeholder participation. We extend our thanks to all those who participate.

For more information or assistance, please contact Courtney Camburn at Courtney.Camburn@nerc.net

NERC
NORTH AMERICAN ELECTRIC RELIABILITY CORPORATION

Standards Announcement
Initial Ballot Results

Now available at: https://standards.nerc.net/Ballots.aspx

Project 2007-17: Protection System Maintenance and Testing
The initial ballot for standard PRC-005-2 — Protection System Maintenance and Testing and a separate initial ballot for the definition of "Protection System" ended on July 17, 2010.

Ballot Results for Standard
Voting statistics are listed below, and the Ballot Results Web page provides a link to the detailed results:

Quorum: 91.12 %
Approval: 22.91 %

Since at least one negative ballot included a comment, these results are not final. A second (or recirculation) ballot must be conducted. Ballot criteria are listed at the end of the announcement.

Ballot Results for Definition
Voting statistics are listed below, and the Ballot Results Web page provides a link to the detailed results:

Quorum: 87.85 %
Approval: 39.35 %

Since at least one negative ballot included a comment, these results are not final. A second (or recirculation) ballot must be conducted. Ballot criteria are listed at the end of the announcement.

Violation Risk Factor (VRF) and Violation Severity Level (VSL) Non-binding Poll Results
For the non-binding poll, 86 % of those registered to participate provided an opinion; 28 % of those who provided an opinion indicated support for the VRFs and VSLs that were proposed.

Next Steps
As part of the recirculation ballot process, the drafting team must draft and post responses to voter comments. The drafting team will also determine whether or not to make revisions to the balloted item(s). Should the team decide to make revisions, the revised item(s) will return to the initial ballot phase.

Project Background
The draft standard combines the following previous standards:

- PRC-005-1 — Transmission and Generation Protection System Maintenance and Testing
- PRC-008-0 — Underfrequency Load Shedding Equipment Maintenance Program
- PRC-011-0 — UVLS System Maintenance and Testing
- PRC-017-0 — Special Protection System Maintenance and Testing

The proposed standard addresses FERC directives from FERC Order 693 as well as issues identified by stakeholders. In accordance with the FERC directives, this draft standard establishes requirements for a time-based maintenance program, where all relevant devices are
maintained according to prescribed maximum intervals. It further establishes requirements for a condition-based maintenance program, where the hands-on maintenance intervals are adjusted to reflect the known and reported condition of the relevant devices, and for a performance-based maintenance program, where the hands-on maintenance intervals are adjusted to reflect the historical performance of the relevant devices.

More information is available on the project page:
http://www.nerc.com/filez/standards/Protection_System_Maintenance_Project_2007-17.html

Standards Development Process

The *Reliability Standards Development Procedure* contains all the procedures governing the standards development process. The success of the NERC standards development process depends on stakeholder participation. We extend our thanks to all those who participate.

Ballot Criteria

Approval requires both a (1) quorum, which is established by at least 75% of the members of the ballot pool for submitting either an affirmative vote, a negative vote, or an abstention, and (2) A two-thirds majority of the weighted segment votes cast must be affirmative; the number of votes cast is the sum of affirmative and negative votes, excluding abstentions and nonresponses. If there are no negative votes with reasons from the first ballot, the results of the first ballot shall stand. If, however, one or more members submit negative votes with reasons, a second ballot shall be conducted.

For more information or assistance,
please contact Lauren Koller at Lauren.Koller@nerc.net

User Name

Password

Log in

Register

-Ballot Pools
-Current Ballots
-Ballot Results
-Registered Ballot Body
-Proxy Voters

Home Page

Ballot Results

Ballot Name:	Project 2007-17 Protection System Maintenance and Testing (PRC-005-2)_in
Ballot Period:	7/8/2010 - 7/17/2010
Ballot Type:	Initial
Total # Votes:	318
Total Ballot Pool:	349
Quorum:	**91.12 % The Quorum has been reached**
Weighted Segment Vote:	22.91 %
Ballot Results:	**The standard will proceed to recirculation ballot.**

Summary of Ballot Results

Segment	Ballot Pool	Segment Weight	Affirmative # Votes	Affirmative Fraction	Negative # Votes	Negative Fraction	Abstain # Votes	No Vote
1 - Segment 1.	91	1	19	0.238	61	0.763	3	8
2 - Segment 2.	9	0.2	1	0.1	1	0.1	6	1
3 - Segment 3.	91	1	9	0.111	72	0.889	3	7
4 - Segment 4.	24	1	3	0.15	17	0.85	2	2
5 - Segment 5.	73	1	17	0.27	46	0.73	3	7
6 - Segment 6.	36	1	8	0.235	26	0.765	1	1
7 - Segment 7.	0	0	0	0	0	0	0	0
8 - Segment 8.	11	0.8	2	0.2	6	0.6	1	2
9 - Segment 9.	7	0.6	3	0.3	3	0.3	0	1
10 - Segment 10.	7	0.4	0	0	4	0.4	1	2
Totals	**349**	**7**	**62**	**1.604**	**236**	**5.397**	**20**	**31**

Individual Ballot Pool Results

Segment	Organization	Member	Ballot	Comments
1	Allegheny Power	Rodney Phillips	Negative	
1	Ameren Services	Kirit S. Shah	Negative	View
1	American Electric Power	Paul B. Johnson	Negative	View
1	American Transmission Company, LLC	Jason Shaver	Negative	View
1	Arizona Public Service Co.	Robert D Smith	Negative	View
1	Associated Electric Cooperative, Inc.	John Bussman	Negative	View
1	Avista Corp.	Scott Kinney	Negative	View

1	Baltimore Gas & Electric Company	John J. Moraski	Negative	View
1	BC Transmission Corporation	Gordon Rawlings	Negative	View
1	Beaches Energy Services	Joseph S. Stonecipher	Negative	
1	Black Hills Corp	Eric Egge	Negative	
1	Bonneville Power Administration	Donald S. Watkins	Negative	View
1	CenterPoint Energy	Paul Rocha	Negative	
1	Central Maine Power Company	Brian Conroy	Affirmative	
1	City of Vero Beach	Randall McCamish	Negative	
1	City Utilities of Springfield, Missouri	Jeff Knottek	Affirmative	
1	Clark Public Utilities	Jack Stamper	Negative	View
1	Cleco Power LLC	Danny McDaniel	Negative	View
1	Colorado Springs Utilities	Paul Morland	Negative	View
1	Commonwealth Edison Co.	Daniel Brotzman	Affirmative	View
1	Consolidated Edison Co. of New York	Christopher L de Graffenried	Negative	View
1	Dairyland Power Coop.	Robert W. Roddy	Affirmative	
1	Dayton Power & Light Co.	Hertzel Shamash		
1	Deseret Power	James Tucker	Affirmative	
1	Dominion Virginia Power	John K Loftis	Negative	View
1	Duke Energy Carolina	Douglas E. Hils	Negative	View
1	East Kentucky Power Coop.	George S. Carruba	Affirmative	
1	Empire District Electric Co.	Ralph Frederick Meyer	Negative	View
1	Entergy Corporation	George R. Bartlett	Negative	View
1	FirstEnergy Energy Delivery	Robert Martinko	Affirmative	View
1	Florida Keys Electric Cooperative Assoc.	Dennis Minton	Negative	
1	Gainesville Regional Utilities	Luther E. Fair	Negative	View
1	GDS Associates, Inc.	Claudiu Cadar	Negative	View
1	Georgia Transmission Corporation	Harold Taylor, II	Negative	View
1	Great River Energy	Gordon Pietsch	Negative	View
1	Hydro One Networks, Inc.	Ajay Garg	Negative	View
1	Idaho Power Company	Ronald D. Schellberg	Negative	View
1	International Transmission Company Holdings Corp	Michael Moltane	Affirmative	View
1	Kansas City Power & Light Co.	Michael Gammon	Negative	View
1	Keys Energy Services	Stan T. Rzad	Negative	View
1	Lake Worth Utilities	Walt Gill	Negative	View
1	Lakeland Electric	Larry E Watt	Negative	View
1	Lee County Electric Cooperative	John W Delucca	Negative	
1	Lincoln Electric System	Doug Bantam		
1	Long Island Power Authority	Robert Ganley	Negative	
1	Lower Colorado River Authority	Martyn Turner		
1	Manitoba Hydro	Michelle Rheault	Negative	View
1	Metropolitan Water District of Southern California	Ernest Hahn	Abstain	
1	MidAmerican Energy Co.	Terry Harbour	Negative	View
1	National Grid	Saurabh Saksena	Negative	View
1	Nebraska Public Power District	Richard L. Koch	Negative	View
1	New York Power Authority	Arnold J. Schuff	Negative	
1	Northeast Utilities	David H. Boguslawski	Negative	View
1	NorthWestern Energy	John Canavan	Affirmative	
1	Ohio Valley Electric Corp.	Robert Mattey	Affirmative	
1	Oklahoma Gas and Electric Co.	Marvin E VanBebber	Affirmative	
1	Omaha Public Power District	Douglas G Peterchuck	Negative	
1	Oncor Electric Delivery	Michael T. Quinn	Affirmative	
1	Orlando Utilities Commission	Brad Chase	Affirmative	
1	Otter Tail Power Company	Lawrence R. Larson	Negative	
1	Pacific Gas and Electric Company	Chifong L. Thomas	Negative	View
1	PacifiCorp	Mark Sampson	Negative	
1	PECO Energy	Ronald Schloendorn	Affirmative	
1	Platte River Power Authority	John C. Collins	Negative	View
1	Portland General Electric Co.	Frank F. Afranji		
1	Potomac Electric Power Co.	Richard J Kafka	Negative	
1	PowerSouth Energy Cooperative	Larry D. Avery		
1	PPL Electric Utilities Corp.	Brenda L Truhe	Negative	View
1	Public Service Company of New Mexico	Laurie Williams	Negative	View
1	Public Service Electric and Gas Co.	Kenneth D. Brown	Negative	View
1	Public Utility District No. 1 of Chelan County	Chad Bowman	Negative	View
1	Puget Sound Energy, Inc.	Catherine Koch		

1	Sacramento Municipal Utility District	Tim Kelley	Affirmative	
1	Salt River Project	Robert Kondziolka		
1	Santee Cooper	Terry L. Blackwell	Abstain	
1	SCE&G	Henry Delk, Jr.	Negative	View
1	Seattle City Light	Pawel Krupa	Negative	View
1	South Texas Electric Cooperative	Richard McLeon	Negative	
1	Southern California Edison Co.	Dana Cabbell	Affirmative	
1	Southern Company Services, Inc.	Horace Stephen Williamson	Negative	View
1	Southern Illinois Power Coop.	William G. Hutchison	Negative	
1	Southwest Transmission Cooperative, Inc.	James L. Jones	Abstain	
1	Southwestern Power Administration	Gary W Cox	Negative	
1	Sunflower Electric Power Corporation	Noman Lee Williams	Negative	
1	Tennessee Valley Authority	Larry Akens	Affirmative	
1	Tri-State G & T Association Inc.	Keith V. Carman	Negative	View
1	Tucson Electric Power Co.	John Tolo	Negative	
1	United Illuminating Co.	Jonathan Appelbaum	Affirmative	
1	Westar Energy	Allen Klassen		
1	Western Area Power Administration	Brandy A Dunn	Affirmative	
1	Xcel Energy, Inc.	Gregory L Pieper	Negative	View
2	Alberta Electric System Operator	Jason L. Murray	Abstain	
2	BC Transmission Corporation	Faramarz Amjadi	Negative	
2	Electric Reliability Council of Texas, Inc.	Chuck B Manning	Abstain	
2	Independent Electricity System Operator	Kim Warren	Abstain	
2	ISO New England, Inc.	Kathleen Goodman	Affirmative	
2	Midwest ISO, Inc.	Jason L Marshall	Abstain	View
2	New York Independent System Operator	Gregory Campoli		
2	PJM Interconnection, L.L.C.	Tom Bowe	Abstain	
2	Southwest Power Pool	Charles H Yeung	Abstain	
3	Alabama Power Company	Richard J. Mandes	Negative	View
3	Allegheny Power	Bob Reeping	Negative	View
3	Ameren Services	Mark Peters	Negative	
3	American Electric Power	Raj Rana		
3	Arizona Public Service Co.	Thomas R. Glock	Negative	View
3	Atlantic City Electric Company	James V. Petrella	Negative	
3	BC Hydro and Power Authority	Pat G. Harrington	Abstain	
3	Blachly-Lane Electric Co-op	Bud Tracy	Negative	
3	Bonneville Power Administration	Rebecca Berdahl	Negative	View
3	Central Electric Cooperative, Inc. (Redmond, Oregon)	Dave Markham	Negative	
3	Central Lincoln PUD	Steve Alexanderson	Negative	View
3	City of Bartow, Florida	Matt Culverhouse	Negative	View
3	City of Clewiston	Lynne Mila	Negative	
3	City of Farmington	Linda R. Jacobson	Negative	View
3	City of Green Cove Springs	Gregg R Griffin	Negative	
3	City of Leesburg	Phil Janik	Negative	
3	Clearwater Power Co.	Dave Hagen	Negative	
3	Cleco Utility Group	Bryan Y Harper	Negative	View
3	ComEd	Bruce Krawczyk	Affirmative	
3	Consolidated Edison Co. of New York	Peter T Yost	Negative	View
3	Consumers Energy	David A. Lapinski	Negative	View
3	Consumers Power Inc.	Roman Gillen	Negative	
3	Coos-Curry Electric Cooperative, Inc	Roger Meader	Negative	
3	Cowlitz County PUD	Russell A Noble	Negative	View
3	Delmarva Power & Light Co.	Michael R. Mayer	Negative	
3	Detroit Edison Company	Kent Kujala	Affirmative	
3	Dominion Resources Services	Michael F Gildea	Negative	View
3	Douglas Electric Cooperative	Dave Sabala	Negative	
3	Duke Energy Carolina	Henry Ernst-Jr	Negative	
3	East Kentucky Power Coop.	Sally Witt	Affirmative	
3	Entergy	Joel T Plessinger	Negative	View
3	Fall River Rural Electric Cooperative	Bryan Case	Negative	
3	FirstEnergy Solutions	Kevin Querry	Affirmative	View
3	Florida Power Corporation	Lee Schuster	Negative	View
3	Gainesville Regional Utilities	Kenneth Simmons	Negative	
3	Georgia Power Company	Anthony L Wilson	Negative	View
3	Georgia System Operations Corporation	R Scott S. Barfield-McGinnis	Negative	View
3	Great River Energy	Sam Kokkinen	Negative	View

3	Gulf Power Company	Gwen S Frazier	Negative	View
3	Hydro One Networks, Inc.	Michael D. Penstone	Negative	View
3	JEA	Garry Baker	Negative	View
3	Kansas City Power & Light Co.	Charles Locke	Negative	View
3	Kissimmee Utility Authority	Gregory David Woessner	Negative	
3	Lakeland Electric	Mace Hunter	Negative	View
3	Lane Electric Cooperative, Inc.	Rick Crinklaw	Negative	
3	Lincoln Electric Cooperative, Inc.	Michael Henry	Negative	
3	Lincoln Electric System	Bruce Merrill	Negative	View
3	Los Angeles Department of Water & Power	Kenneth Silver		
3	Lost River Electric Cooperative	Richard Reynolds	Negative	
3	Louisville Gas and Electric Co.	Charles A. Freibert	Affirmative	View
3	Manitoba Hydro	Greg C Parent	Negative	View
3	MEAG Power	Steven Grego	Negative	View
3	MidAmerican Energy Co.	Thomas C. Mielnik	Negative	View
3	Mississippi Power	Don Horsley	Negative	View
3	Municipal Electric Authority of Georgia	Steven M. Jackson	Negative	View
3	Muscatine Power & Water	John Bos	Affirmative	
3	New York Power Authority	Marilyn Brown	Negative	
3	Niagara Mohawk (National Grid Company)	Michael Schiavone	Negative	View
3	North Carolina Municipal Power Agency #1	Denise Roeder		
3	Northern Indiana Public Service Co.	William SeDoris	Negative	
3	Northern Lights Inc.	Jon Shelby	Negative	
3	Ocala Electric Utility	David T. Anderson	Negative	
3	Okanogan County Electric Cooperative, Inc.	Ray Ellis	Negative	
3	Orlando Utilities Commission	Ballard Keith Mutters	Abstain	
3	OTP Wholesale Marketing	Bradley Tollerson	Negative	
3	PacifiCorp	John Apperson	Negative	
3	PECO Energy an Exelon Co.	Vincent J. Catania	Affirmative	
3	Platte River Power Authority	Terry L Baker	Negative	View
3	Potomac Electric Power Co.	Robert Reuter		
3	Progress Energy Carolinas	Sam Waters		
3	Public Service Electric and Gas Co.	Jeffrey Mueller	Negative	View
3	Public Utility District No. 1 of Chelan County	Kenneth R. Johnson	Negative	View
3	Public Utility District No. 2 of Grant County	Greg Lange	Negative	View
3	Raft River Rural Electric Cooperative	Heber Carpenter	Negative	
3	Sacramento Municipal Utility District	James Leigh-Kendall	Affirmative	
3	Salem Electric	Anthony Schacher	Negative	View
3	Salmon River Electric Cooperative	Ken Dizes	Negative	
3	Salt River Project	John T. Underhill		
3	San Diego Gas & Electric	Scott Peterson		
3	Santee Cooper	Zack Dusenbury	Abstain	
3	Seattle City Light	Dana Wheelock	Negative	View
3	South Mississippi Electric Power Association	Gary Hutson	Negative	
3	Southern California Edison Co.	David Schiada	Affirmative	
3	Springfield Utility Board	Jeff Nelson	Negative	View
3	Tampa Electric Co.	Ronald L Donahey	Negative	View
3	Tri-State G & T Association Inc.	Janelle Marriott	Negative	View
3	Umatilla Electric Cooperative	Steve Eldrige	Negative	
3	West Oregon Electric Cooperative, Inc.	Marc Farmer	Negative	
3	Wisconsin Electric Power Marketing	James R. Keller	Negative	View
3	Wisconsin Public Service Corp.	Gregory J Le Grave	Negative	View
3	Xcel Energy, Inc.	Michael Ibold	Negative	View
4	Alliant Energy Corp. Services, Inc.	Kenneth Goldsmith	Negative	View
4	American Municipal Power - Ohio	Kevin Koloini	Negative	
4	American Public Power Association	Allen Mosher	Abstain	
4	City of Clewiston	Kevin McCarthy	Negative	
4	City of New Smyrna Beach Utilities Commission	Timothy Beyrle	Negative	
4	Consumers Energy	David Frank Ronk	Negative	View
4	Cowlitz County PUD	Rick Syring	Negative	View
4	Detroit Edison Company	Daniel Herring	Negative	View
4	Florida Municipal Power Agency	Frank Gaffney	Negative	View
4	Fort Pierce Utilities Authority	Thomas W. Richards	Negative	View
4	Georgia System Operations Corporation	Guy Andrews	Negative	View
4	Illinois Municipal Electric Agency	Bob C. Thomas	Negative	View
4	Integrys Energy Group, Inc.	Christopher Plante	Abstain	

4	Madison Gas and Electric Co.	Joseph G. DePoorter	Negative	View
4	Ohio Edison Company	Douglas Hohlbaugh	Affirmative	View
4	Old Dominion Electric Coop.	Mark Ringhausen	Negative	View
4	Public Utility District No. 1 of Douglas County	Henry E. LuBean	Affirmative	
4	Public Utility District No. 1 of Snohomish County	John D. Martinsen		
4	Sacramento Municipal Utility District	Mike Ramirez	Affirmative	
4	Seattle City Light	Hao Li	Negative	View
4	Seminole Electric Cooperative, Inc.	Steven R Wallace	Negative	
4	South Mississippi Electric Power Association	Steve McElhaney		
4	Wisconsin Energy Corp.	Anthony Jankowski	Negative	View
4	Y-W Electric Association, Inc.	James A Ziebarth	Negative	View
5	AEP Service Corp.	Brock Ondayko	Negative	View
5	Amerenue	Sam Dwyer	Negative	
5	APS	Mel Jensen	Negative	View
5	Avista Corp.	Edward F. Groce	Negative	
5	BC Hydro and Power Authority	Clement Ma	Affirmative	
5	Black Hills Corp	George Tatar	Negative	View
5	Bonneville Power Administration	Francis J. Halpin	Negative	View
5	Chelan County Public Utility District #1	John Yale	Affirmative	
5	City of Grand Island	Jeff Mead	Negative	
5	City of Tallahassee	Alan Gale	Negative	
5	City Water, Light & Power of Springfield	Karl E. Kohlrus	Affirmative	
5	Consolidated Edison Co. of New York	Wilket (Jack) Ng	Negative	
5	Constellation Power Source Generation, Inc.	Amir Y Hammad	Negative	
5	Consumers Energy	James B Lewis	Negative	View
5	Cowlitz County PUD	Bob Essex	Negative	View
5	Dominion Resources, Inc.	Mike Garton	Negative	View
5	Duke Energy	Robert Smith	Negative	
5	Dynegy Inc.	Dan Roethemeyer	Affirmative	
5	East Kentucky Power Coop.	Stephen Ricker	Affirmative	
5	Energy Northwest - Columbia Generating Station	Doug Ramey	Abstain	
5	Entegra Power Group, LLC	Kenneth Parker	Affirmative	
5	Entergy Corporation	Stanley M Jaskot	Negative	View
5	Exelon Nuclear	Michael Korchynsky	Affirmative	
5	ExxonMobil Research and Engineering	Martin Kaufman	Negative	View
5	FirstEnergy Solutions	Kenneth Dresner	Affirmative	View
5	Florida Municipal Power Agency	David Schumann	Negative	View
5	Great River Energy	Cynthia E Sulzer	Negative	View
5	Green Country Energy	Greg Froehling	Affirmative	
5	Horizon Wind Energy	Brent Hebert	Affirmative	
5	Indeck Energy Services, Inc.	Rex A Roehl	Negative	View
5	JEA	Donald Gilbert	Abstain	
5	Kansas City Power & Light Co.	Scott Heidtbrink	Negative	View
5	Kissimmee Utility Authority	Mike Blough		
5	Lakeland Electric	Thomas J Trickey	Negative	
5	Liberty Electric Power LLC	Daniel Duff	Negative	View
5	Lincoln Electric System	Dennis Florom	Negative	View
5	Louisville Gas and Electric Co.	Charlie Martin	Affirmative	
5	Luminant Generation Company LLC	Mike Laney	Affirmative	
5	Manitoba Hydro	Mark Aikens	Negative	View
5	Massachusetts Municipal Wholesale Electric Company	David Gordon	Negative	
5	New Harquahala Generating Co. LLC	Nicholas Q Hayes	Affirmative	
5	New York Power Authority	Gerald Mannarino		
5	Northern Indiana Public Service Co.	Michael K Wilkerson	Negative	
5	Otter Tail Power Company	Stacie Hebert	Negative	
5	Pacific Gas and Electric Company	Richard J. Padilla	Negative	View
5	PacifiCorp	Sandra L. Shaffer	Negative	
5	Portland General Electric Co.	Gary L Tingley		
5	PowerSouth Energy Cooperative	Tim Hattaway	Negative	View
5	PPL Generation LLC	Mark A. Heimbach	Negative	View
5	Progress Energy Carolinas	Wayne Lewis	Negative	
5	PSEG Power LLC	David Murray	Negative	View
5	Public Utility District No. 1 of Lewis County	Steven Grega	Negative	View
5	Reedy Creek Energy Services	Bernie Budnik	Negative	
5	RRI Energy	Thomas J. Bradish	Affirmative	View

5	Sacramento Municipal Utility District	Bethany Wright	Affirmative	
5	Salt River Project	Glen Reeves	Negative	View
5	San Diego Gas & Electric	Daniel Baerman	Negative	
5	Seattle City Light	Michael J. Haynes	Negative	
5	Seminole Electric Cooperative, Inc.	Brenda K. Atkins		
5	South Carolina Electric & Gas Co.	Richard Jones		
5	South Mississippi Electric Power Association	Jerry W Johnson	Negative	View
5	Southern Company Generation	William D Shultz	Negative	View
5	SRW Cogeneration Limited Partnership	Michael Albosta		
5	Tampa Electric Co.	RJames Rocha		
5	Tenaska, Inc.	Scott M. Helyer	Negative	View
5	Tennessee Valley Authority	George T. Ballew	Affirmative	
5	TransAlta Centralia Generation, LLC	Joanna Luong-Tran	Abstain	
5	Tri-State G & T Association Inc.	Barry Ingold	Negative	
5	U.S. Army Corps of Engineers Northwestern Division	Karl Bryan	Affirmative	
5	U.S. Bureau of Reclamation	Martin Bauer P.E.	Negative	View
5	Wisconsin Electric Power Co.	Linda Horn	Negative	View
5	Wisconsin Public Service Corp.	Leonard Rentmeester	Negative	
5	Xcel Energy, Inc.	Liam Noailles	Negative	View
6	AEP Marketing	Edward P. Cox	Negative	View
6	Ameren Energy Marketing Co.	Jennifer Richardson	Negative	
6	Bonneville Power Administration	Brenda S. Anderson	Negative	View
6	Cleco Power LLC	Matthew D Cripps	Negative	View
6	Consolidated Edison Co. of New York	Nickesha P Carrol	Negative	View
6	Constellation Energy Commodities Group	Brenda Powell	Negative	
6	Dominion Resources, Inc.	Louis S Slade	Negative	View
6	Duke Energy Carolina	Walter Yeager	Negative	
6	Entergy Services, Inc.	Terri F Benoit	Negative	View
6	Eugene Water & Electric Board	Daniel Mark Bedbury	Affirmative	
6	Exelon Power Team	Pulin Shah	Affirmative	
6	FirstEnergy Solutions	Mark S Travaglianti	Affirmative	View
6	Florida Municipal Power Pool	Thomas E Washburn	Negative	View
6	Florida Power & Light Co.	Silvia P Mitchell	Negative	View
6	Great River Energy	Donna Stephenson	Negative	View
6	Kansas City Power & Light Co.	Thomas Saitta	Negative	View
6	Lakeland Electric	Paul Shipps	Negative	View
6	Lincoln Electric System	Eric Ruskamp	Negative	View
6	Louisville Gas and Electric Co.	Daryn Barker	Affirmative	
6	Luminant Energy	Brad Jones	Affirmative	
6	Manitoba Hydro	Daniel Prowse	Negative	View
6	New York Power Authority	Thomas Papadopoulos	Negative	
6	Northern Indiana Public Service Co.	Joseph O'Brien	Negative	View
6	Omaha Public Power District	David Ried	Negative	
6	OTP Wholesale Marketing	Bruce Glorvigen	Negative	
6	Progress Energy	James Eckelkamp	Negative	
6	PSEG Energy Resources & Trade LLC	James D. Hebson	Negative	View
6	Public Utility District No. 1 of Chelan County	Hugh A. Owen		
6	RRI Energy	Trent Carlson	Affirmative	
6	Santee Cooper	Suzanne Ritter	Abstain	
6	Seattle City Light	Dennis Sismaet	Negative	View
6	Seminole Electric Cooperative, Inc.	Trudy S. Novak	Negative	
6	South Carolina Electric & Gas Co.	Matt H Bullard	Negative	View
6	Tennessee Valley Authority	Marjorie S. Parsons	Affirmative	
6	Western Area Power Administration - UGP Marketing	John Stonebarger	Affirmative	
6	Xcel Energy, Inc.	David F. Lemmons	Negative	View
8		Merle Ashton		
8		Roger C Zaklukiewicz	Negative	View
8		James A Maenner	Abstain	
8		Kristina M. Loudermilk	Affirmative	
8	Ascendant Energy Services, LLC	Raymond Tran	Affirmative	
8	JDRJC Associates	Jim D. Cyrulewski	Negative	
8	Pacific Northwest Generating Cooperative	Margaret Ryan	Negative	
8	Power Energy Group LLC	Peggy Abbadini		
8	SPS Consulting Group Inc.	Jim R Stanton	Negative	View
8	Utility Services, Inc.	Brian Evans-Mongeon	Negative	View

8	Volkmann Consulting, Inc.	Terry Volkmann	Negative	
9	California Energy Commission	William Mitchell Chamberlain	Negative	View
9	Commonwealth of Massachusetts Department of Public Utilities	Donald E. Nelson	Affirmative	
9	National Association of Regulatory Utility Commissioners	Diane J. Barney	Negative	
9	North Carolina Utilities Commission	Kimberly J. Jones		
9	Oregon Public Utility Commission	Jerome Murray	Negative	View
9	Public Service Commission of South Carolina	Philip Riley	Affirmative	
9	Utah Public Service Commission	Ric Campbell	Affirmative	
10	Florida Reliability Coordinating Council	Linda Campbell	Abstain	
10	Midwest Reliability Organization	Dan R. Schoenecker	Negative	View
10	New York State Reliability Council	Alan Adamson	Negative	
10	Northeast Power Coordinating Council, Inc.	Guy V. Zito	Negative	View
10	ReliabilityFirst Corporation	Jacquie Smith		
10	SERC Reliability Corporation	Carter B Edge		
10	Western Electricity Coordinating Council	Louise McCarren	Negative	View

Legal and Privacy : 609.452.8060 voice : 609.452.9550 fax : 116-390 Village Boulevard : Princeton, NJ 08540-5721
Washington Office: 1120 G Street, N.W. : Suite 990 : Washington, DC 20005-3801

Account Log-In/Register

Copyright © 2009 by the North American Electric Reliability Corporation. : All rights reserved.
A New Jersey Nonprofit Corporation

User Name

Password

Log in

Register

-Ballot Pools
-Current Ballots
-Ballot Results
-Registered Ballot Body
-Proxy Voters

Home Page

Ballot Results

Ballot Name:	Project 2007-17 Protection System Maintenance and Testing (Protection System definition)_in
Ballot Period:	7/8/2010 - 7/17/2010
Ballot Type:	Initial
Total # Votes:	282
Total Ballot Pool:	321
Quorum:	**87.85 % The Quorum has been reached**
Weighted Segment Vote:	39.35 %
Ballot Results:	**The standard will proceed to recirculation ballot.**

Summary of Ballot Results

Segment	Ballot Pool	Segment Weight	Affirmative # Votes	Affirmative Fraction	Negative # Votes	Negative Fraction	Abstain # Votes	No Vote
1 - Segment 1.	89	1	31	0.425	42	0.575	4	12
2 - Segment 2.	9	0.2	1	0.1	1	0.1	6	1
3 - Segment 3.	71	1	22	0.393	34	0.607	7	8
4 - Segment 4.	24	1	7	0.368	12	0.632	2	3
5 - Segment 5.	67	1	17	0.327	35	0.673	7	8
6 - Segment 6.	37	1	10	0.323	21	0.677	3	3
7 - Segment 7.	0	0	0	0	0	0	0	0
8 - Segment 8.	11	0.7	3	0.3	4	0.4	2	2
9 - Segment 9.	6	0.5	4	0.4	1	0.1	1	0
10 - Segment 10.	7	0.3	0	0	3	0.3	2	2
Totals	**321**	**6.7**	**95**	**2.636**	**153**	**4.064**	**34**	**39**

Individual Ballot Pool Results

Segment	Organization	Member	Ballot	Comments
1	Allegheny Power	Rodney Phillips	Affirmative	
1	Ameren Services	Kirit S. Shah	Negative	View
1	American Electric Power	Paul B. Johnson	Negative	View
1	American Transmission Company, LLC	Jason Shaver	Affirmative	View
1	Arizona Public Service Co.	Robert D Smith	Negative	View
1	Associated Electric Cooperative, Inc.	John Bussman		
1	Avista Corp.	Scott Kinney	Negative	View

1	Baltimore Gas & Electric Company	John J. Moraski	Affirmative	
1	BC Transmission Corporation	Gordon Rawlings	Negative	View
1	Beaches Energy Services	Joseph S. Stonecipher	Negative	View
1	Black Hills Corp	Eric Egge		
1	Bonneville Power Administration	Donald S. Watkins	Affirmative	
1	CenterPoint Energy	Paul Rocha	Negative	
1	Central Maine Power Company	Brian Conroy	Affirmative	
1	City of Vero Beach	Randall McCamish	Negative	
1	City Utilities of Springfield, Missouri	Jeff Knottek	Affirmative	
1	Clark Public Utilities	Jack Stamper	Negative	View
1	Cleco Power LLC	Danny McDaniel	Negative	View
1	Colorado Springs Utilities	Paul Morland		
1	Commonwealth Edison Co.	Daniel Brotzman	Affirmative	
1	Consolidated Edison Co. of New York	Christopher L de Graffenried	Negative	View
1	Dairyland Power Coop.	Robert W. Roddy	Affirmative	
1	Dayton Power & Light Co.	Hertzel Shamash		
1	Deseret Power	James Tucker	Affirmative	
1	Dominion Virginia Power	John K Loftis	Negative	View
1	Duke Energy Carolina	Douglas E. Hils	Negative	View
1	East Kentucky Power Coop.	George S. Carruba	Affirmative	
1	Empire District Electric Co.	Ralph Frederick Meyer	Negative	View
1	Entergy Corporation	George R. Bartlett	Negative	View
1	FirstEnergy Energy Delivery	Robert Martinko	Affirmative	View
1	Florida Keys Electric Cooperative Assoc.	Dennis Minton	Negative	
1	Gainesville Regional Utilities	Luther E. Fair	Abstain	
1	GDS Associates, Inc.	Claudiu Cadar	Negative	View
1	Georgia Transmission Corporation	Harold Taylor, II	Affirmative	
1	Great River Energy	Gordon Pietsch	Negative	View
1	Hydro One Networks, Inc.	Ajay Garg	Negative	View
1	Idaho Power Company	Ronald D. Schellberg	Affirmative	
1	International Transmission Company Holdings Corp	Michael Moltane	Affirmative	View
1	Kansas City Power & Light Co.	Michael Gammon	Negative	View
1	Keys Energy Services	Stan T. Rzad	Negative	View
1	Lake Worth Utilities	Walt Gill	Negative	View
1	Lakeland Electric	Larry E Watt	Affirmative	View
1	Lincoln Electric System	Doug Bantam		
1	Long Island Power Authority	Robert Ganley	Negative	
1	Lower Colorado River Authority	Martyn Turner		
1	Manitoba Hydro	Michelle Rheault	Affirmative	
1	Metropolitan Water District of Southern California	Ernest Hahn	Abstain	
1	MidAmerican Energy Co.	Terry Harbour	Negative	View
1	Minnesota Power, Inc.	Randi Woodward	Affirmative	
1	National Grid	Saurabh Saksena	Negative	View
1	Nebraska Public Power District	Richard L. Koch		
1	New York Power Authority	Arnold J. Schuff	Negative	
1	Northeast Utilities	David H. Boguslawski	Affirmative	
1	NorthWestern Energy	John Canavan	Affirmative	
1	Ohio Valley Electric Corp.	Robert Mattey	Affirmative	
1	Oklahoma Gas and Electric Co.	Marvin E VanBebber	Affirmative	
1	Omaha Public Power District	Douglas G Peterchuck	Negative	
1	Orlando Utilities Commission	Brad Chase	Affirmative	
1	Otter Tail Power Company	Lawrence R. Larson	Negative	
1	Pacific Gas and Electric Company	Chifong L. Thomas	Negative	View
1	PacifiCorp	Mark Sampson	Negative	
1	PECO Energy	Ronald Schloendorn	Affirmative	
1	Platte River Power Authority	John C. Collins	Negative	View
1	Potomac Electric Power Co.	Richard J Kafka	Negative	View
1	PowerSouth Energy Cooperative	Larry D. Avery		
1	PPL Electric Utilities Corp.	Brenda L Truhe	Negative	View
1	Public Service Company of New Mexico	Laurie Williams	Affirmative	
1	Public Service Electric and Gas Co.	Kenneth D. Brown	Negative	View
1	Public Utility District No. 1 of Chelan County	Chad Bowman		
1	Puget Sound Energy, Inc.	Catherine Koch		
1	Sacramento Municipal Utility District	Tim Kelley	Affirmative	
1	Salt River Project	Robert Kondziolka		

1	Santee Cooper	Terry L. Blackwell	Abstain	
1	SCE&G	Henry Delk, Jr.	Negative	View
1	Seattle City Light	Pawel Krupa	Negative	View
1	South Texas Electric Cooperative	Richard McLeon	Negative	
1	Southern California Edison Co.	Dana Cabbell	Affirmative	
1	Southern Company Services, Inc.	Horace Stephen Williamson	Affirmative	View
1	Southern Illinois Power Coop.	William G. Hutchison	Negative	
1	Southwest Transmission Cooperative, Inc.	James L. Jones	Abstain	
1	Southwestern Power Administration	Gary W Cox	Negative	
1	Sunflower Electric Power Corporation	Noman Lee Williams	Affirmative	
1	Tennessee Valley Authority	Larry Akens	Affirmative	
1	Tri-State G & T Association Inc.	Keith V. Carman	Negative	
1	Tucson Electric Power Co.	John Tolo	Negative	View
1	United Illuminating Co.	Jonathan Appelbaum	Affirmative	
1	Westar Energy	Allen Klassen		
1	Western Area Power Administration	Brandy A Dunn	Affirmative	
1	Xcel Energy, Inc.	Gregory L Pieper	Negative	View
2	Alberta Electric System Operator	Jason L. Murray	Abstain	
2	BC Transmission Corporation	Faramarz Amjadi	Negative	
2	Electric Reliability Council of Texas, Inc.	Chuck B Manning	Abstain	
2	Independent Electricity System Operator	Kim Warren	Abstain	
2	ISO New England, Inc.	Kathleen Goodman	Affirmative	
2	Midwest ISO, Inc.	Jason L Marshall	Abstain	View
2	New York Independent System Operator	Gregory Campoli		
2	PJM Interconnection, L.L.C.	Tom Bowe	Abstain	
2	Southwest Power Pool	Charles H Yeung	Abstain	
3	Alabama Power Company	Richard J. Mandes	Affirmative	View
3	Allegheny Power	Bob Reeping	Affirmative	
3	Ameren Services	Mark Peters	Negative	
3	American Electric Power	Raj Rana		
3	Arizona Public Service Co.	Thomas R. Glock	Negative	View
3	Atlantic City Electric Company	James V. Petrella	Negative	
3	BC Hydro and Power Authority	Pat G. Harrington	Abstain	
3	Bonneville Power Administration	Rebecca Berdahl	Negative	View
3	Central Lincoln PUD	Steve Alexanderson	Negative	View
3	City of Bartow, Florida	Matt Culverhouse	Abstain	
3	City of Clewiston	Lynne Mila	Negative	
3	City of Farmington	Linda R. Jacobson	Abstain	
3	City of Green Cove Springs	Gregg R Griffin	Negative	
3	City of Leesburg	Phil Janik	Abstain	
3	ComEd	Bruce Krawczyk	Affirmative	
3	Consolidated Edison Co. of New York	Peter T Yost	Negative	View
3	Consumers Energy	David A. Lapinski	Negative	View
3	Cowlitz County PUD	Russell A Noble	Negative	View
3	Delmarva Power & Light Co.	Michael R. Mayer	Negative	
3	Detroit Edison Company	Kent Kujala	Affirmative	
3	Dominion Resources Services	Michael F Gildea	Negative	View
3	Duke Energy Carolina	Henry Ernst-Jr	Negative	
3	East Kentucky Power Coop.	Sally Witt	Affirmative	
3	Entergy	Joel T Plessinger	Negative	View
3	FirstEnergy Solutions	Kevin Querry	Affirmative	View
3	Florida Power Corporation	Lee Schuster		
3	Gainesville Regional Utilities	Kenneth Simmons	Affirmative	
3	Georgia Power Company	Anthony L Wilson	Affirmative	View
3	Georgia System Operations Corporation	R Scott S. Barfield-McGinnis	Affirmative	
3	Great River Energy	Sam Kokkinen	Negative	View
3	Gulf Power Company	Gwen S Frazier	Affirmative	View
3	Hydro One Networks, Inc.	Michael D. Penstone	Negative	View
3	JEA	Garry Baker	Affirmative	
3	Kansas City Power & Light Co.	Charles Locke	Negative	View
3	Kissimmee Utility Authority	Gregory David Woessner	Negative	
3	Lakeland Electric	Mace Hunter	Negative	View
3	Lincoln Electric System	Bruce Merrill	Negative	View
3	Los Angeles Department of Water & Power	Kenneth Silver		
3	Louisville Gas and Electric Co.	Charles A. Freibert	Affirmative	View
3	Manitoba Hydro	Greg C Parent	Affirmative	
3	MEAG Power	Steven Grego	Affirmative	

3	MidAmerican Energy Co.	Thomas C. Mielnik	Negative	View
3	Mississippi Power	Don Horsley	Affirmative	View
3	Municipal Electric Authority of Georgia	Steven M. Jackson	Negative	View
3	Muscatine Power & Water	John Bos	Affirmative	
3	New York Power Authority	Marilyn Brown	Negative	
3	Niagara Mohawk (National Grid Company)	Michael Schiavone	Negative	View
3	Northern Indiana Public Service Co.	William SeDoris	Negative	
3	Ocala Electric Utility	David T. Anderson	Negative	
3	Orlando Utilities Commission	Ballard Keith Mutters	Abstain	
3	PacifiCorp	John Apperson	Affirmative	
3	PECO Energy an Exelon Co.	Vincent J. Catania	Affirmative	
3	Platte River Power Authority	Terry L Baker	Negative	View
3	Potomac Electric Power Co.	Robert Reuter		
3	Progress Energy Carolinas	Sam Waters		
3	Public Service Electric and Gas Co.	Jeffrey Mueller	Negative	
3	Public Utility District No. 1 of Chelan County	Kenneth R. Johnson	Abstain	
3	Public Utility District No. 2 of Grant County	Greg Lange	Negative	View
3	Sacramento Municipal Utility District	James Leigh-Kendall	Affirmative	
3	Salem Electric	Anthony Schacher	Negative	
3	Salt River Project	John T. Underhill		
3	San Diego Gas & Electric	Scott Peterson		
3	Santee Cooper	Zack Dusenbury	Abstain	
3	Seattle City Light	Dana Wheelock	Negative	View
3	Southern California Edison Co.	David Schiada		
3	Springfield Utility Board	Jeff Nelson	Affirmative	
3	Tampa Electric Co.	Ronald L Donahey	Affirmative	
3	Tri-State G & T Association Inc.	Janelle Marriott	Negative	
3	Wisconsin Electric Power Marketing	James R. Keller	Negative	View
3	Wisconsin Public Service Corp.	Gregory J Le Grave	Affirmative	
3	Xcel Energy, Inc.	Michael Ibold	Negative	View
4	Alliant Energy Corp. Services, Inc.	Kenneth Goldsmith	Affirmative	
4	American Municipal Power - Ohio	Kevin Koloini	Negative	
4	American Public Power Association	Allen Mosher	Abstain	
4	City of Clewiston	Kevin McCarthy	Negative	
4	City of New Smyrna Beach Utilities Commission	Timothy Beyrle	Negative	
4	Consumers Energy	David Frank Ronk	Negative	View
4	Cowlitz County PUD	Rick Syring	Negative	View
4	Detroit Edison Company	Daniel Herring	Negative	View
4	Florida Municipal Power Agency	Frank Gaffney	Negative	View
4	Fort Pierce Utilities Authority	Thomas W. Richards	Negative	View
4	Georgia System Operations Corporation	Guy Andrews	Affirmative	
4	Illinois Municipal Electric Agency	Bob C. Thomas	Affirmative	
4	Integrys Energy Group, Inc.	Christopher Plante	Abstain	
4	Madison Gas and Electric Co.	Joseph G. DePoorter	Negative	View
4	Ohio Edison Company	Douglas Hohlbaugh	Affirmative	View
4	Old Dominion Electric Coop.	Mark Ringhausen	Affirmative	View
4	Public Utility District No. 1 of Douglas County	Henry E. LuBean	Affirmative	
4	Public Utility District No. 1 of Snohomish County	John D. Martinsen		
4	Sacramento Municipal Utility District	Mike Ramirez	Affirmative	
4	Seattle City Light	Hao Li	Negative	View
4	Seminole Electric Cooperative, Inc.	Steven R Wallace		
4	South Mississippi Electric Power Association	Steve McElhaney		
4	Wisconsin Energy Corp.	Anthony Jankowski	Negative	View
4	Y-W Electric Association, Inc.	James A Ziebarth	Negative	View
5	AEP Service Corp.	Brock Ondayko	Negative	View
5	Amerenue	Sam Dwyer	Negative	
5	APS	Mel Jensen	Negative	View
5	Avista Corp.	Edward F. Groce	Negative	
5	Black Hills Corp	George Tatar	Negative	
5	Bonneville Power Administration	Francis J. Halpin	Affirmative	
5	Chelan County Public Utility District #1	John Yale		
5	City of Grand Island	Jeff Mead	Negative	
5	City of Tallahassee	Alan Gale	Negative	
5	City Water, Light & Power of Springfield	Karl E. Kohlrus	Affirmative	
5	Consolidated Edison Co. of New York	Wilket (Jack) Ng	Negative	

5	Constellation Power Source Generation, Inc.	Amir Y Hammad	Negative	
5	Consumers Energy	James B Lewis	Negative	
5	Cowlitz County PUD	Bob Essex	Negative	View
5	Dominion Resources, Inc.	Mike Garton	Negative	View
5	Duke Energy	Robert Smith	Negative	
5	Dynegy Inc.	Dan Roethemeyer	Affirmative	
5	East Kentucky Power Coop.	Stephen Ricker	Affirmative	
5	Energy Northwest - Columbia Generating Station	Doug Ramey	Abstain	
5	Entegra Power Group, LLC	Kenneth Parker	Affirmative	
5	Entergy Corporation	Stanley M Jaskot	Negative	View
5	FirstEnergy Solutions	Kenneth Dresner	Affirmative	View
5	Florida Municipal Power Agency	David Schumann	Negative	View
5	Green Country Energy	Greg Froehling	Affirmative	
5	Horizon Wind Energy	Brent Hebert	Affirmative	
5	Indeck Energy Services, Inc.	Rex A Roehl	Abstain	
5	JEA	Donald Gilbert	Abstain	
5	Kansas City Power & Light Co.	Scott Heidtbrink	Negative	View
5	Kissimmee Utility Authority	Mike Blough		
5	Lakeland Electric	Thomas J Trickey	Negative	
5	Liberty Electric Power LLC	Daniel Duff	Affirmative	
5	Lincoln Electric System	Dennis Florom	Negative	View
5	Louisville Gas and Electric Co.	Charlie Martin	Affirmative	
5	Luminant Generation Company LLC	Mike Laney	Affirmative	
5	Manitoba Hydro	Mark Aikens	Affirmative	
5	Massachusetts Municipal Wholesale Electric Company	David Gordon	Abstain	
5	New Harquahala Generating Co. LLC	Nicholas Q Hayes	Affirmative	
5	New York Power Authority	Gerald Mannarino		
5	Northern Indiana Public Service Co.	Michael K Wilkerson	Negative	
5	Otter Tail Power Company	Stacie Hebert	Negative	
5	PacifiCorp	Sandra L. Shaffer	Negative	
5	Portland General Electric Co.	Gary L Tingley		
5	PowerSouth Energy Cooperative	Tim Hattaway	Abstain	
5	PPL Generation LLC	Mark A. Heimbach	Negative	View
5	Progress Energy Carolinas	Wayne Lewis	Negative	View
5	PSEG Power LLC	David Murray	Negative	View
5	Public Utility District No. 1 of Lewis County	Steven Grega	Negative	
5	Reedy Creek Energy Services	Bernie Budnik	Negative	
5	RRI Energy	Thomas J. Bradish	Affirmative	
5	Sacramento Municipal Utility District	Bethany Wright	Affirmative	
5	Salt River Project	Glen Reeves	Negative	View
5	San Diego Gas & Electric	Daniel Baerman	Negative	
5	Seattle City Light	Michael J. Haynes	Negative	
5	Seminole Electric Cooperative, Inc.	Brenda K. Atkins		
5	South Carolina Electric & Gas Co.	Richard Jones		
5	South Mississippi Electric Power Association	Jerry W Johnson	Negative	
5	Southern Company Generation	William D Shultz	Negative	View
5	Tampa Electric Co.	RJames Rocha		
5	Tenaska, Inc.	Scott M. Helyer	Abstain	
5	Tennessee Valley Authority	George T. Ballew	Affirmative	
5	TransAlta Centralia Generation, LLC	Joanna Luong-Tran	Abstain	
5	Tri-State G & T Association Inc.	Barry Ingold	Negative	
5	U.S. Army Corps of Engineers Northwestern Division	Karl Bryan	Affirmative	
5	U.S. Bureau of Reclamation	Martin Bauer P.E.	Negative	View
5	Wisconsin Electric Power Co.	Linda Horn	Negative	View
5	Wisconsin Public Service Corp.	Leonard Rentmeester	Negative	
5	Xcel Energy, Inc.	Liam Noailles		
6	AEP Marketing	Edward P. Cox	Negative	View
6	Ameren Energy Marketing Co.	Jennifer Richardson	Negative	
6	Bonneville Power Administration	Brenda S. Anderson	Affirmative	
6	Cleco Power LLC	Matthew D Cripps	Negative	View
6	Consolidated Edison Co. of New York	Nickesha P Carrol	Negative	View
6	Constellation Energy Commodities Group	Brenda Powell	Negative	
6	Dominion Resources, Inc.	Louis S Slade	Negative	View
6	Duke Energy Carolina	Walter Yeager	Negative	
6	Entergy Services, Inc.	Terri F Benoit	Negative	View

6	Eugene Water & Electric Board	Daniel Mark Bedbury	Affirmative	
6	Exelon Power Team	Pulin Shah	Affirmative	
6	FirstEnergy Solutions	Mark S Travaglianti	Affirmative	View
6	Florida Municipal Power Agency	Richard L. Montgomery		
6	Florida Municipal Power Pool	Thomas E Washburn	Negative	View
6	Florida Power & Light Co.	Silvia P Mitchell	Negative	View
6	Great River Energy	Donna Stephenson	Negative	View
6	Kansas City Power & Light Co.	Thomas Saitta	Negative	View
6	Lakeland Electric	Paul Shipps	Abstain	
6	Lincoln Electric System	Eric Ruskamp	Negative	View
6	Louisville Gas and Electric Co.	Daryn Barker	Affirmative	
6	Luminant Energy	Brad Jones	Affirmative	
6	Manitoba Hydro	Daniel Prowse	Affirmative	
6	New York Power Authority	Thomas Papadopoulos	Negative	
6	Northern Indiana Public Service Co.	Joseph O'Brien	Negative	View
6	Omaha Public Power District	David Ried	Negative	
6	OTP Wholesale Marketing	Bruce Glorvigen	Negative	
6	Progress Energy	James Eckelkamp	Negative	
6	PSEG Energy Resources & Trade LLC	James D. Hebson	Negative	View
6	Public Utility District No. 1 of Chelan County	Hugh A. Owen		
6	RRI Energy	Trent Carlson	Affirmative	
6	Santee Cooper	Suzanne Ritter	Abstain	
6	Seattle City Light	Dennis Sismaet	Negative	View
6	Seminole Electric Cooperative, Inc.	Trudy S. Novak		
6	South Carolina Electric & Gas Co.	Matt H Bullard	Abstain	
6	Tennessee Valley Authority	Marjorie S. Parsons	Affirmative	
6	Western Area Power Administration - UGP Marketing	John Stonebarger	Affirmative	
6	Xcel Energy, Inc.	David F. Lemmons	Negative	View
8		Roger C Zaklukiewicz	Affirmative	
8		James A Maenner	Abstain	
8		Kristina M. Loudermilk	Affirmative	
8		Merle Ashton		
8	Ascendant Energy Services, LLC	Raymond Tran	Affirmative	
8	JDRJC Associates	Jim D. Cyrulewski	Negative	
8	Pacific Northwest Generating Cooperative	Margaret Ryan	Abstain	
8	Power Energy Group LLC	Peggy Abbadini		
8	SPS Consulting Group Inc.	Jim R Stanton	Negative	View
8	Utility Services, Inc.	Brian Evans-Mongeon	Negative	View
8	Volkmann Consulting, Inc.	Terry Volkmann	Negative	
9	California Energy Commission	William Mitchell Chamberlain	Negative	
9	Commonwealth of Massachusetts Department of Public Utilities	Donald E. Nelson	Affirmative	
9	National Association of Regulatory Utility Commissioners	Diane J. Barney	Affirmative	
9	Oregon Public Utility Commission	Jerome Murray	Abstain	
9	Public Service Commission of South Carolina	Philip Riley	Affirmative	
9	Utah Public Service Commission	Ric Campbell	Affirmative	
10	Florida Reliability Coordinating Council	Linda Campbell	Abstain	
10	Midwest Reliability Organization	Dan R. Schoenecker	Negative	View
10	New York State Reliability Council	Alan Adamson	Negative	
10	Northeast Power Coordinating Council, Inc.	Guy V. Zito	Negative	
10	ReliabilityFirst Corporation	Jacquie Smith		
10	SERC Reliability Corporation	Carter B Edge		
10	Western Electricity Coordinating Council	Louise McCarren	Abstain	

Copyright © 2009 by the North American Electric Reliability Corporation. : All rights reserved.
A New Jersey Nonprofit Corporation

NERC
NORTH AMERICAN ELECTRIC RELIABILITY CORPORATION

Non-binding Poll Name:	Project 2007-17 Protection System Maintenance - Non-binding Poll for VRFs and VSLs
Poll Period:	7/8/2010 - 7/17/2010
Total # Opinions:	300
Total Ballot Pool:	349
Summary Results:	86% of those who registered to participate provided an opinion; 28% of those who provided an opinion indicated support for the VRFs and VSLs that were proposed

Individual Ballot Pool Results

Segment	Organization	Member	Ballot	Comments
1	Allegheny Power	Rodney Phillips	Negative	
1	Ameren Services	Kirit S. Shah	Negative	View
1	American Electric Power	Paul B. Johnson	Negative	View
1	American Transmission Company, LLC	Jason Shaver		
1	Arizona Public Service Co.	Robert D Smith	Abstain	
1	Associated Electric Cooperative, Inc.	John Bussman		
1	Avista Corp.	Scott Kinney	Abstain	
1	Baltimore Gas & Electric Company	John J. Moraski	Abstain	
1	BC Transmission Corporation	Gordon Rawlings	Negative	View
1	Beaches Energy Services	Joseph S. Stonecipher	Negative	
1	Black Hills Corp	Eric Egge		
1	Bonneville Power Administration	Donald S. Watkins	Affirmative	
1	CenterPoint Energy	Paul Rocha	Negative	
1	Central Maine Power Company	Brian Conroy	Abstain	
1	City of Vero Beach	Randall McCamish	Negative	
1	City Utilities of Springfield, Missouri	Jeff Knottek	Abstain	

1	Clark Public Utilities	Jack Stamper	Abstain	
1	Cleco Power LLC	Danny McDaniel	Negative	
1	Colorado Springs Utilities	Paul Morland	Negative	
1	Commonwealth Edison Co.	Daniel Brotzman	Affirmative	
1	Consolidated Edison Co. of New York	Christopher L de Graffenried	Negative	
1	Dairyland Power Coop.	Robert W. Roddy	Abstain	
1	Dayton Power & Light Co.	Hertzel Shamash		
1	Deseret Power	James Tucker	Affirmative	
1	Dominion Virginia Power	John K Loftis	Abstain	
1	Duke Energy Carolina	Douglas E. Hils	Negative	View
1	East Kentucky Power Coop.	George S. Carruba	Negative	
1	Empire District Electric Co.	Ralph Frederick Meyer	Negative	
1	Entergy Corporation	George R. Bartlett	Affirmative	
1	FirstEnergy Energy Delivery	Robert Martinko	Negative	View
1	Florida Keys Electric Cooperative Assoc.	Dennis Minton	Negative	
1	Gainesville Regional Utilities	Luther E. Fair	Abstain	
1	GDS Associates, Inc.	Claudiu Cadar	Abstain	
1	Georgia Transmission Corporation	Harold Taylor, II	Negative	View
1	Great River Energy	Gordon Pietsch		
1	Hydro One Networks, Inc.	Ajay Garg	Affirmative	
1	Idaho Power Company	Ronald D. Schellberg	Negative	
1	International Transmission Company Holdings Corp	Michael Moltane	Affirmative	
1	Kansas City Power & Light Co.	Michael Gammon	Negative	View

1	Keys Energy Services	Stan T. Rzad	Negative	View
1	Lake Worth Utilities	Walt Gill	Negative	View
1	Lakeland Electric	Larry E Watt	Abstain	
1	Lee County Electric Cooperative	John W Delucca		
1	Lincoln Electric System	Doug Bantam		
1	Long Island Power Authority	Robert Ganley	Negative	
1	Lower Colorado River Authority	Martyn Turner		
1	Manitoba Hydro	Michelle Rheault	Negative	
1	Metropolitan Water District of Southern California	Ernest Hahn	Abstain	
1	MidAmerican Energy Co.	Terry Harbour	Negative	
1	National Grid	Saurabh Saksena	Negative	View
1	Nebraska Public Power District	Richard L. Koch	Abstain	
1	New York Power Authority	Arnold J. Schuff	Negative	
1	Northeast Utilities	David H. Boguslawski	Affirmative	
1	NorthWestern Energy	John Canavan	Affirmative	
1	Ohio Valley Electric Corp.	Robert Mattey	Negative	
1	Oklahoma Gas and Electric Co.	Marvin E VanBebber	Affirmative	
1	Omaha Public Power District	Douglas G Peterchuck	Negative	
1	Oncor Electric Delivery	Michael T. Quinn	Affirmative	
1	Orlando Utilities Commission	Brad Chase	Affirmative	
1	Otter Tail Power Company	Lawrence R. Larson	Negative	
1	Pacific Gas and Electric Company	Chifong L. Thomas	Negative	View
1	PacifiCorp	Mark Sampson	Negative	
1	PECO Energy	Ronald Schloendorn	Affirmative	

1	Platte River Power Authority	John C. Collins	Negative	View
1	Portland General Electric Co.	Frank F. Afranji		
1	Potomac Electric Power Co.	Richard J Kafka	Abstain	
1	PowerSouth Energy Cooperative	Larry D. Avery		
1	PPL Electric Utilities Corp.	Brenda L Truhe	Negative	View
1	Public Service Company of New Mexico	Laurie Williams	Negative	View
1	Public Service Electric and Gas Co.	Kenneth D. Brown	Abstain	
1	Public Utility District No. 1 of Chelan County	Chad Bowman	Abstain	
1	Puget Sound Energy, Inc.	Catherine Koch		
1	Sacramento Municipal Utility District	Tim Kelley	Abstain	
1	Salt River Project	Robert Kondziolka		
1	Santee Cooper	Terry L. Blackwell	Abstain	
1	SCE&G	Henry Delk, Jr.	Negative	
1	Seattle City Light	Pawel Krupa	Negative	
1	South Texas Electric Cooperative	Richard McLeon	Negative	
1	Southern California Edison Co.	Dana Cabbell	Affirmative	
1	Southern Company Services, Inc.	Horace Stephen Williamson	Abstain	View
1	Southern Illinois Power Coop.	William G. Hutchison	Negative	
1	Southwest Transmission Cooperative, Inc.	James L. Jones	Abstain	
1	Southwestern Power Administration	Gary W Cox	Negative	
1	Sunflower Electric Power Corporation	Noman Lee Williams		
1	Tennessee Valley Authority	Larry Akens	Negative	View
1	Tri-State G & T Association Inc.	Keith V. Carman	Negative	

1	Tucson Electric Power Co.	John Tolo	Affirmative	
1	United Illuminating Co.	Jonathan Appelbaum	Negative	View
1	Westar Energy	Allen Klassen		
1	Western Area Power Administration	Brandy A Dunn	Affirmative	
1	Xcel Energy, Inc.	Gregory L Pieper	Negative	View
2	Alberta Electric System Operator	Jason L. Murray	Abstain	
2	BC Transmission Corporation	Faramarz Amjadi	Abstain	
2	Electric Reliability Council of Texas, Inc.	Chuck B Manning	Abstain	
2	Independent Electricity System Operator	Kim Warren	Abstain	
2	ISO New England, Inc.	Kathleen Goodman		
2	Midwest ISO, Inc.	Jason L Marshall	Abstain	View
2	New York Independent System Operator	Gregory Campoli	Negative	View
2	PJM Interconnection, L.L.C.	Tom Bowe	Abstain	
2	Southwest Power Pool	Charles H Yeung	Abstain	
3	Alabama Power Company	Richard J. Mandes	Abstain	View
3	Allegheny Power	Bob Reeping	Negative	View
3	Ameren Services	Mark Peters	Negative	
3	American Electric Power	Raj Rana		
3	Arizona Public Service Co.	Thomas R. Glock	Abstain	
3	Atlantic City Electric Company	James V. Petrella	Affirmative	
3	BC Hydro and Power Authority	Pat G. Harrington	Abstain	
3	Blachly-Lane Electric Co-op	Bud Tracy	Negative	
3	Bonneville Power Administration	Rebecca Berdahl	Affirmative	

3	Central Electric Cooperative, Inc. (Redmond, Oregon)	Dave Markham	Negative	
3	Central Lincoln PUD	Steve Alexanderson	Negative	View
3	City of Bartow, Florida	Matt Culverhouse	Negative	View
3	City of Clewiston	Lynne Mila	Negative	
3	City of Farmington	Linda R. Jacobson	Negative	
3	City of Green Cove Springs	Gregg R Griffin	Negative	
3	City of Leesburg	Phil Janik	Negative	
3	Clearwater Power Co.	Dave Hagen	Negative	
3	Cleco Utility Group	Bryan Y Harper	Negative	
3	ComEd	Bruce Krawczyk	Affirmative	
3	Consolidated Edison Co. of New York	Peter T Yost	Negative	View
3	Consumers Energy	David A. Lapinski	Abstain	
3	Consumers Power Inc.	Roman Gillen	Negative	
3	Coos-Curry Electric Cooperative, Inc	Roger Meader	Negative	
3	Cowlitz County PUD	Russell A Noble	Negative	View
3	Delmarva Power & Light Co.	Michael R. Mayer	Affirmative	
3	Detroit Edison Company	Kent Kujala	Affirmative	
3	Dominion Resources Services	Michael F Gildea	Abstain	
3	Douglas Electric Cooperative	Dave Sabala	Negative	
3	Duke Energy Carolina	Henry Ernst-Jr	Negative	
3	East Kentucky Power Coop.	Sally Witt	Negative	
3	Entergy	Joel T Plessinger	Negative	View
3	Fall River Rural Electric Cooperative	Bryan Case	Negative	
3	FirstEnergy Solutions	Kevin Querry	Negative	View

3	Florida Power Corporation	Lee Schuster		
3	Gainesville Regional Utilities	Kenneth Simmons	Negative	
3	Georgia Power Company	Anthony L Wilson	Abstain	View
3	Georgia System Operations Corporation	R Scott S. Barfield-McGinnis	Negative	View
3	Great River Energy	Sam Kokkinen	Negative	
3	Gulf Power Company	Gwen S Frazier	Abstain	View
3	Hydro One Networks, Inc.	Michael D. Penstone	Affirmative	
3	JEA	Garry Baker		
3	Kansas City Power & Light Co.	Charles Locke	Negative	View
3	Kissimmee Utility Authority	Gregory David Woessner	Negative	
3	Lakeland Electric	Mace Hunter	Abstain	
3	Lane Electric Cooperative, Inc.	Rick Crinklaw	Negative	
3	Lincoln Electric Cooperative, Inc.	Michael Henry	Negative	
3	Lincoln Electric System	Bruce Merrill	Abstain	
3	Los Angeles Department of Water & Power	Kenneth Silver		
3	Lost River Electric Cooperative	Richard Reynolds	Negative	
3	Louisville Gas and Electric Co.	Charles A. Freibert	Affirmative	View
3	Manitoba Hydro	Greg C Parent	Negative	
3	MEAG Power	Steven Grego	Affirmative	
3	MidAmerican Energy Co.	Thomas C. Mielnik	Negative	
3	Mississippi Power	Don Horsley	Abstain	View
3	Municipal Electric Authority of Georgia	Steven M. Jackson	Affirmative	
3	Muscatine Power & Water	John Bos	Affirmative	

3	New York Power Authority	Marilyn Brown	Negative	
3	Niagara Mohawk (National Grid Company)	Michael Schiavone	Negative	View
3	North Carolina Municipal Power Agency #1	Denise Roeder		
3	Northern Indiana Public Service Co.	William SeDoris	Negative	
3	Northern Lights Inc.	Jon Shelby	Negative	
3	Ocala Electric Utility	David T. Anderson	Negative	
3	Okanogan County Electric Cooperative, Inc.	Ray Ellis	Negative	
3	Orlando Utilities Commission	Ballard Keith Mutters	Abstain	
3	OTP Wholesale Marketing	Bradley Tollerson	Negative	
3	PacifiCorp	John Apperson	Affirmative	
3	PECO Energy an Exelon Co.	Vincent J. Catania	Affirmative	
3	Platte River Power Authority	Terry L Baker	Negative	View
3	Potomac Electric Power Co.	Robert Reuter		
3	Progress Energy Carolinas	Sam Waters		
3	Public Service Electric and Gas Co.	Jeffrey Mueller	Abstain	
3	Public Utility District No. 1 of Chelan County	Kenneth R. Johnson	Abstain	
3	Public Utility District No. 2 of Grant County	Greg Lange	Negative	
3	Raft River Rural Electric Cooperative	Heber Carpenter	Negative	
3	Sacramento Municipal Utility District	James Leigh-Kendall	Abstain	
3	Salem Electric	Anthony Schacher	Negative	
3	Salmon River Electric Cooperative	Ken Dizes	Negative	
3	Salt River Project	John T. Underhill		

3	San Diego Gas & Electric	Scott Peterson		
3	Santee Cooper	Zack Dusenbury	Abstain	
3	Seattle City Light	Dana Wheelock	Negative	
3	South Mississippi Electric Power Association	Gary Hutson	Abstain	
3	Southern California Edison Co.	David Schiada	Affirmative	
3	Springfield Utility Board	Jeff Nelson	Negative	View
3	Tampa Electric Co.	Ronald L Donahey	Negative	
3	Tri-State G & T Association Inc.	Janelle Marriott	Negative	View
3	Umatilla Electric Cooperative	Steve Eldrige	Negative	
3	West Oregon Electric Cooperative, Inc.	Marc Farmer	Negative	
3	Wisconsin Electric Power Marketing	James R. Keller	Affirmative	
3	Wisconsin Public Service Corp.	Gregory J Le Grave	Abstain	
3	Xcel Energy, Inc.	Michael Ibold	Abstain	
4	Alliant Energy Corp. Services, Inc.	Kenneth Goldsmith	Abstain	
4	American Municipal Power - Ohio	Kevin Koloini	Negative	
4	American Public Power Association	Allen Mosher	Abstain	
4	City of Clewiston	Kevin McCarthy	Negative	
4	City of New Smyrna Beach Utilities Commission	Timothy Beyrle	Negative	
4	Consumers Energy	David Frank Ronk	Affirmative	
4	Cowlitz County PUD	Rick Syring	Negative	View
4	Detroit Edison Company	Daniel Herring	Negative	
4	Florida Municipal Power Agency	Frank Gaffney	Negative	View
4	Fort Pierce Utilities Authority	Thomas W. Richards	Abstain	

4	Georgia System Operations Corporation	Guy Andrews	Negative	View
4	Illinois Municipal Electric Agency	Bob C. Thomas	Abstain	
4	Integrys Energy Group, Inc.	Christopher Plante	Abstain	
4	Madison Gas and Electric Co.	Joseph G. DePoorter	Abstain	
4	Ohio Edison Company	Douglas Hohlbaugh	Negative	View
4	Old Dominion Electric Coop.	Mark Ringhausen	Abstain	
4	Public Utility District No. 1 of Douglas County	Henry E. LuBean	Affirmative	
4	Public Utility District No. 1 of Snohomish County	John D. Martinsen		
4	Sacramento Municipal Utility District	Mike Ramirez	Abstain	
4	Seattle City Light	Hao Li	Negative	
4	Seminole Electric Cooperative, Inc.	Steven R Wallace	Abstain	
4	South Mississippi Electric Power Association	Steve McElhaney		
4	Wisconsin Energy Corp.	Anthony Jankowski	Negative	View
4	Y-W Electric Association, Inc.	James A Ziebarth	Affirmative	
5	AEP Service Corp.	Brock Ondayko	Affirmative	View
5	Amerenue	Sam Dwyer	Negative	
5	APS	Mel Jensen	Abstain	
5	Avista Corp.	Edward F. Groce	Abstain	
5	BC Hydro and Power Authority	Clement Ma	Affirmative	
5	Black Hills Corp	George Tatar	Negative	
5	Bonneville Power Administration	Francis J. Halpin	Affirmative	
5	Chelan County Public Utility District #1	John Yale		

5	City of Grand Island	Jeff Mead	Abstain	
5	City of Tallahassee	Alan Gale	Negative	
5	City Water, Light & Power of Springfield	Karl E. Kohlrus	Affirmative	
5	Consolidated Edison Co. of New York	Wilket (Jack) Ng	Negative	
5	Constellation Power Source Generation, Inc.	Amir Y Hammad	Negative	View
5	Consumers Energy	James B Lewis	Negative	View
5	Cowlitz County PUD	Bob Essex	Negative	View
5	Dominion Resources, Inc.	Mike Garton	Abstain	
5	Duke Energy	Robert Smith	Negative	
5	Dynegy Inc.	Dan Roethemeyer	Affirmative	
5	East Kentucky Power Coop.	Stephen Ricker	Negative	
5	Energy Northwest - Columbia Generating Station	Doug Ramey	Abstain	
5	Entegra Power Group, LLC	Kenneth Parker	Abstain	
5	Entergy Corporation	Stanley M Jaskot	Negative	View
5	Exelon Nuclear	Michael Korchynsky	Affirmative	
5	ExxonMobil Research and Engineering	Martin Kaufman	Negative	
5	FirstEnergy Solutions	Kenneth Dresner	Negative	View
5	Florida Municipal Power Agency	David Schumann	Negative	View
5	Great River Energy	Cynthia E Sulzer		
5	Green Country Energy	Greg Froehling	Affirmative	
5	Horizon Wind Energy	Brent Hebert	Affirmative	
5	Indeck Energy Services, Inc.	Rex A Roehl	Negative	
5	JEA	Donald Gilbert	Abstain	

5	Kansas City Power & Light Co.	Scott Heidtbrink	Negative	View
5	Kissimmee Utility Authority	Mike Blough		
5	Lakeland Electric	Thomas J Trickey		
5	Liberty Electric Power LLC	Daniel Duff	Negative	View
5	Lincoln Electric System	Dennis Florom	Abstain	
5	Louisville Gas and Electric Co.	Charlie Martin	Affirmative	
5	Luminant Generation Company LLC	Mike Laney	Affirmative	
5	Manitoba Hydro	Mark Aikens	Negative	
5	Massachusetts Municipal Wholesale Electric Company	David Gordon	Abstain	
5	New Harquahala Generating Co. LLC	Nicholas Q Hayes	Abstain	
5	New York Power Authority	Gerald Mannarino		
5	Northern Indiana Public Service Co.	Michael K Wilkerson	Negative	
5	Otter Tail Power Company	Stacie Hebert	Negative	
5	Pacific Gas and Electric Company	Richard J. Padilla	Negative	View
5	PacifiCorp	Sandra L. Shaffer	Affirmative	
5	Portland General Electric Co.	Gary L Tingley		
5	PowerSouth Energy Cooperative	Tim Hattaway	Negative	
5	PPL Generation LLC	Mark A. Heimbach	Abstain	
5	Progress Energy Carolinas	Wayne Lewis	Negative	
5	PSEG Power LLC	David Murray	Abstain	
5	Public Utility District No. 1 of Lewis County	Steven Grega	Negative	
5	Reedy Creek Energy Services	Bernie Budnik	Negative	
5	RRI Energy	Thomas J. Bradish	Affirmative	
5	Sacramento Municipal Utility District	Bethany Wright	Abstain	

5	Salt River Project	Glen Reeves	Negative	View
5	San Diego Gas & Electric	Daniel Baerman	Negative	
5	Seattle City Light	Michael J. Haynes	Affirmative	
5	Seminole Electric Cooperative, Inc.	Brenda K. Atkins		
5	South Carolina Electric & Gas Co.	Richard Jones		
5	South Mississippi Electric Power Association	Jerry W Johnson	Negative	
5	Southern Company Generation	William D Shultz	Abstain	View
5	SRW Cogeneration Limited Partnership	Michael Albosta	Negative	
5	Tampa Electric Co.	RJames Rocha		
5	Tenaska, Inc.	Scott M. Helyer	Abstain	
5	Tennessee Valley Authority	George T. Ballew	Negative	View
5	TransAlta Centralia Generation, LLC	Joanna Luong-Tran	Abstain	
5	Tri-State G & T Association Inc.	Barry Ingold	Affirmative	
5	U.S. Army Corps of Engineers Northwestern Division	Karl Bryan	Affirmative	
5	U.S. Bureau of Reclamation	Martin Bauer P.E.	Negative	View
5	Wisconsin Electric Power Co.	Linda Horn	Affirmative	
5	Wisconsin Public Service Corp.	Leonard Rentmeester		
5	Xcel Energy, Inc.	Liam Noailles		
6	AEP Marketing	Edward P. Cox	Negative	View
6	Ameren Energy Marketing Co.	Jennifer Richardson	Negative	
6	Bonneville Power Administration	Brenda S. Anderson	Affirmative	
6	Cleco Power LLC	Matthew D Cripps	Negative	
6	Consolidated Edison Co. of New York	Nickesha P Carrol	Negative	

6	Constellation Energy Commodities Group	Brenda Powell	Negative	
6	Dominion Resources, Inc.	Louis S Slade	Abstain	
6	Duke Energy Carolina	Walter Yeager	Negative	
6	Entergy Services, Inc.	Terri F Benoit	Negative	View
6	Eugene Water & Electric Board	Daniel Mark Bedbury	Affirmative	
6	Exelon Power Team	Pulin Shah	Affirmative	
6	FirstEnergy Solutions	Mark S Travaglianti	Negative	View
6	Florida Municipal Power Pool	Thomas E Washburn	Abstain	
6	Florida Power & Light Co.	Silvia P Mitchell		
6	Great River Energy	Donna Stephenson		
6	Kansas City Power & Light Co.	Thomas Saitta	Negative	View
6	Lakeland Electric	Paul Shipps	Abstain	
6	Lincoln Electric System	Eric Ruskamp	Abstain	
6	Louisville Gas and Electric Co.	Daryn Barker		
6	Luminant Energy	Brad Jones	Affirmative	
6	Manitoba Hydro	Daniel Prowse	Negative	
6	New York Power Authority	Thomas Papadopoulos	Negative	
6	Northern Indiana Public Service Co.	Joseph O'Brien	Negative	
6	Omaha Public Power District	David Ried	Negative	
6	OTP Wholesale Marketing	Bruce Glorvigen	Abstain	
6	Progress Energy	James Eckelkamp	Negative	
6	PSEG Energy Resources & Trade LLC	James D. Hebson	Abstain	
6	Public Utility District No. 1 of Chelan County	Hugh A. Owen		
6	RRI Energy	Trent Carlson	Affirmative	

6	Santee Cooper	Suzanne Ritter	Abstain	
6	Seattle City Light	Dennis Sismaet	Negative	View
6	Seminole Electric Cooperative, Inc.	Trudy S. Novak		
6	South Carolina Electric & Gas Co.	Matt H Bullard	Abstain	
6	Tennessee Valley Authority	Marjorie S. Parsons	Negative	View
6	Western Area Power Administration - UGP Marketing	John Stonebarger	Affirmative	
6	Xcel Energy, Inc.	David F. Lemmons	Abstain	
8		Merle Ashton		
8		Roger C Zaklukiewicz	Affirmative	
8		James A Maenner	Abstain	
8		Kristina M. Loudermilk	Affirmative	
8	Ascendant Energy Services, LLC	Raymond Tran	Affirmative	
8	JDRJC Associates	Jim D. Cyrulewski	Negative	
8	Pacific Northwest Generating Cooperative	Margaret Ryan	Negative	
8	Power Energy Group LLC	Peggy Abbadini		
8	SPS Consulting Group Inc.	Jim R Stanton		
8	Utility Services, Inc.	Brian Evans-Mongeon	Abstain	
8	Volkmann Consulting, Inc.	Terry Volkmann	Negative	
9	California Energy Commission	William Mitchell Chamberlain	Negative	
9	Commonwealth of Massachusetts Department of Public Utilities	Donald E. Nelson	Abstain	
9	National Association of Regulatory Utility Commissioners	Diane J. Barney	Abstain	
9	North Carolina Utilities Commission	Kimberly J. Jones		

9	Oregon Public Utility Commission	Jerome Murray	Abstain	
9	Public Service Commission of South Carolina	Philip Riley	Affirmative	
9	Utah Public Service Commission	Ric Campbell	Affirmative	
10	Florida Reliability Coordinating Council	Linda Campbell	Abstain	
10	Midwest Reliability Organization	Dan R. Schoenecker		
10	New York State Reliability Council	Alan Adamson	Affirmative	
10	Northeast Power Coordinating Council, Inc.	Guy V. Zito	Affirmative	
10	ReliabilityFirst Corporation	Jacquie Smith		
10	SERC Reliability Corporation	Carter B Edge		
10	Western Electricity Coordinating Council	Louise McCarren	Negative	View

Individual or group. (58 Responses)
Name (36 Responses)
Organization (36 Responses)
Group Name (22 Responses)
Lead Contact (22 Responses)
Contact Organization (22 Responses)
Question 1 (51 Responses)
Question 1 Comments (58 Responses)
Question 2 (46 Responses)
Question 2 Comments (58 Responses)
Question 3 (48 Responses)
Question 3 Comments (58 Responses)
Question 4 (48 Responses)
Question 4 Comments (58 Responses)
Question 5 (46 Responses)
Question 5 Comments (58 Responses)
Question 6 (44 Responses)
Question 6 Comments (58 Responses)
Question 7 (0 Responses)
Question 7 Comments (58 Responses)

Group
MRO's NERC Standards Review Subcommittee (NSRS)
Joseph DePoorter
Midwest Reliability Organization
No
The NSRS feels additional changes are needed. The functional testing requirement should be altered or removed as it increases the amount of hands-on involvement and the opportunity for human error related outages to occur, thereby introducing a greater risk to decrease system reliability. As noted on p. 8 in the supplementary reference document, "Experience has shown that keeping human hands away from equipment known to be working correctly enhances reliability." By removing circuits from service on the proposed timelines for functional testing, the chance for human error is greater than a mis-operation from faulty wiring. Alternatively, entities may choose to schedule more planned outages to conduct their functional testing in order to limit the risk of unplanned outages resulting from human error. Under this scenario, more elements will be scheduled out of service on a regular basis, thereby reducing transmission system availability and weakening the system making it more challenging to withstand each subsequent contingency (N-1). Thus testing an in-tact system is more desirable than taking it out of service for testing. While the SDT has included language in the draft standard to use fault analysis to complete maintenance obligations, in practicality, this option does not offer any relief to taking outages to perform functional tests. Nearly all BES circuit breakers are equipped with dual trip coils. Identifying which trip coil operated for a fault only covers the one trip coil. Functional tests would still be needed on the other. The likelihood of having multiple trips on a given line in the course of several years is very low. Given it can take a year to schedule some outages; planning maintenance with random faults is unpractical and will create unacceptable risk to compliance violations. A better approach is to use the basis in schedule A, but extend this to cover the entire protection schemes. The document should establish target goals for mis-operation rates (dependability and security). This would allow the utilities to develop cost effective programs to increase reliability. The utilities would have incentives to replace poorly performing communications systems; they would be able to quantify the value of upgrading relay systems.
No
The NSRS disagrees with the VRFs as specified in the standard. R1 VRF would more likely be

classified as “medium” and R2 through R4 should be classified as a “High” VRF.

No

The NERC standard assigns a retention period for the two most recent performances of maintenance activity which implies two intervals of documentation being maintained. The NSRS does not agree that requiring all data for two full cycles is warranted. The volume and length of data retention is unreasonable. The NSRS recommends that the entity retain the last test date with the associated data, plus the prior cycle test date only without retaining the test data.

Yes

Yes

No

The FAQs are helpful, however, with the revised standard as written, The NSRS has issues with the answers provided. Please refer to Question #7 for areas of concern.

The NSRS does not support the existing 2nd Draft of PRC-005-2 Standard because it is our opinion that: • There is a high probability that system reliability will be reduced with this revised standard. • The utility industry is in the business of keeping the lights on, but these requirements will force the industry to take customers out of service in order to fulfill these requirements. A possible solution is to increase the test intervals, set performance targets, test set on a basis of past performance, etc. • The number of unplanned outages due to human error will increase considerably. • The requirement of a complete functional trip test will reduce the level of reliability and all levels of the BES to include distribution systems. • Availability of the BES will be reduced due to an increased need to schedule planned outages for test purposes (to avoid unplanned outages due to human error). • To implement this standard, an entity will need to hire additional skilled resources that are not readily available. (May require adjustments to the implementation timeline.) • The cost of implementing the revised standard will approximately double our existing cost to perform this work. Requests that relevant reliability performance data (based on actual data and/or lessons learned from past operating incidents, Criteria for Approving Reliability Standards per FERC Order 672) be provided to justify the additional cost and reliability risks associated with functional testing. Under a Performance-Based Program, what happens if the population of components drops below 60 (as all will eventually)? Is there an implementation period to default to TBM? Please clarify. In R1, the statement “or are designed to provide protection for the BES” re-opens the argument about transformer protection or breaker failure protection for transformer high-side breakers tripping BES breakers being included in the transmission protection systems. Also, for Table 1b “Verify that each breaker trip coil, each auxiliary relay, and each lockout relay is electrically operated within this time interval” should be changed from a 6 year interval to a 12 year interval similar to the relay input and outputs. Experience has shown that these both have very similar reliability. The standard as currently drafted raises concern as it relates to the identification of all Protection System components, particularly those with associated communications equipment. In the case of leased lines, a utility would be expected to maintain equipment they do not own. Recommend revising the standard to consider maintenance activities on a communications channel basis in which intermediate device functioning can be verified by sending a signal from one relay to another. Clarification should be given as to the reason for stating control circuitry separately, such as in “Control and trip circuits”. As currently stated, this implies that close circuit DC paths are now subject to a protection system maintenance program when reclosing and closing of breakers have never before been considered part of a Protection System. Statements 3 (For microprocessor relays, check the relay inputs and outputs that are essential to proper functioning of the Protection System.)and 6(Verify correct operation of output actions that are used for tripping. in Table 1b for Protective Relays essentially address the same issue. Please clarify if these are addressing the same issue or not. If the purpose is to describe the functionality of the protection system, that should be covered under another section in the table, such as DC circuitry. How one identifies a voltage and current sensing input is not well defined. In most cases, this should already be identified with the relay. Also, the scope of detail required is ambiguous. Would individual cables, terminal blocks, etc. need to be identified as would be implied by “associated circuitry”? Please clarify. The NSRS recommends that individual cables, terminal blocks, etc are not included in this program. Recommend removing “proper functioning of” from the maintenance activities for voltage and current sensing inputs in Table 1b. A utility is not verifying the functionality of the signal(s), they are verifying the signals themselves. Any functioning of the signals, which is related to ensuring proper relay interpretation, would be covered under the protective relay section. In general, has thought been put into the possibility of degrading reliability by implementing such a rigorous maintenance program? To implement such a program, the number of scheduled outages would greatly increase resulting in scheduling conflicts that will increase, as well as degrading system conditions by taking lines, transformers, etc. out of service. Because of past design practices many of the requirements for maintenance will only be able to be performed by lifting wires to isolated trip paths. Potential error is introduced anytime a wire is lifted, especially numerous wires, by means of ensuring they are put

back in the correct place. Redundancy is one thing that has been implemented in great detail throughout the history of protection systems to ensure that they work as intended. Diligent commissioning may need to be given its due credit.

Group

Northeast Power Coordinating Council

Guy Zito

Northeast Power Coordinating Council

No

Clarification is needed for “to a location where action can be taken”. Some examples in the FAQ will help in this clarification. What type of documentation is required to show compliance that maintenance correctable issue has been reported? Clarify the removal of requirement (see redline version, third row of Table 1a) for testing of unmonitored breaker trip coils. Is it the intention of the SDT to remove a requirement that would drive the industry to install TC monitors on breakers to improve reliability? UFLS/UVLS DC control and trip circuits (Rows 5 and 6 of Table 1a) – Due to the distributed nature of this program, random failures to trip are not impactive to the overall operation of the UFLS protection. There should be no requirement to check the DC portion of these protections any more often than the DC circuit checks associated with that LV breaker. Since it is clear the requirement does not include the need to trip the breakers why the need to check the trip paths? Deletion of this requirement leaves the requirement to check only the relays and relay trip outputs from the protections every 6 years (or as often as the protective relay component type). Should the maintenance activities for “UVLS and UFLS relays that comprise a protection scheme distributed over the power system” not be the same as “Protective Relays”? V and I sensing to relays have a 12 year Maximum Maintenance Interval listed. It is good work practice to have this activity done the same time as maintenance activities associated with relay maintenance. What is the basis for the various Maximum Maintenance Intervals listed in Table 1a? From page 12 of the redline version, for "Station dc Supply (used only for UFLS and UVLS)", is the requirement applicable to distribution substations only? For “Control and trip circuits with unmonitored solid-state trip or auxiliary contacts (UFLS/UVLS Systems only)” under Maintenance Activities - the word “complete: may be removed as it requires to actually trip the breakers. The sentence that tripping of the circuit breakers is not required contradicts with the word “complete”. More specifics are required to spell out the adequate testing e.g. up to the lockout with the trip paths isolated etc. See Page 12 of the redline version. For “Station dc Supply” having 18 calendar months as the Maximum Maintenance Interval, a battery has a 20 year life. IEEE standard PM is on a quarterly basis. What is the basis of the 18 calendar month interval? See page 12 of the redline version. For “Associated communications systems” with a Maximum Maintenance Interval of 6 Calendar years, why is this required? The text "Verify proper functioning of communications equipment inputs and outputs that are essential to proper functioning of the Protection System. Verify the signals to/from the associated protective relay(s)" seems sufficient to ensure reliability. See page 15 of the redline version. For “Relay sensing for Centralized UFLS or UVLS systems UVLS and UFLS relays that comprise a protection scheme distributed over the power system” under maintenance activities, clarify “overlapping segments”. What is the specified interval? Is actual breaker tripping required? See page 15 of the redline version. On the row for Associated communications systems in Table 1c, in the Level 3 Monitoring Attributes for Component column, suggest a change in wording to: Evaluating the performance and quality of the channel as well as the performance of any interface to connected protective relays and alarming if the channel/protective relay connections do not meet performance criteria. In Table 1c it is required to report the detected maintenance correctable issues within 1 hour or less to a location where action can be taken to initiate resolution of that issue. Even for a fully monitored protection system component it can be difficult to report the action in 1 hour. A 24 hour period for both Level 2 and Level 3 reporting of maintenance correctable issues is recommended.

Yes

No

Clarification is needed for “on-site audit” – does it include audits by any of the following - NPCC/NERC/FERC. Several small entities do not have on-site audits and participate in off-site audits. Hence, suggest deleting “on-site” from the requirement. Further clarification is required to the Data Retention section to coordinate with the statement in FAQ (Section IV.d p. 22 redline). Suggest the following revised Data Retention requirement consistent with the statement and example given in FAQ: “The Transmission Owner, Generator Owner, and Distribution Provider shall each retain at least two maintenance test records or statistical data to demonstrate compliance with test interval required for each distinct maintenance activity for the Protection System components. The Compliance Enforcement Authority shall keep the last periodic audit report and all requested and submitted subsequent compliance records.”

No

R4 under Severe VSL mentions – Entity has failed to initiate resolution of maintenance-

correctable issues. What proof will satisfy the requirement that the entity has initiated the resolution? R1 under Severe VSL – Move the first criteria “The entity’s PSMP failed to address one or more of the type of components included in the definition of ‘Protection System’” under High VSL since this criteria cannot have the same VSL level as “Entity has not established a PSMP”.

No

There is no guidance on how to calculate the total number of components and thus, the percentages under different severity levels. FAQ provides some insight into how an entity can count components. However; an example in the reference document will provide clarity. Page 7 of the redline version of Supplemental Reference – bullet 1 under Maintenance Services, paragraph 2 states “ If specific protection scheme components have demonstrated correct performance within specifications, the maintenance test time clock is reset for those components.” Resetting the time clock will make tracking difficult (unless entities have a sophisticated automated tool for tracking). Another option where an entity can take credit for a correct performance within specifications at the time of the maintenance cycle should be included.

Yes

UFLS systems by design can suffer random failures to trip. A requirement should exist that stipulates to perform maintenance on the UFLS relay as their failure to operate may affect numerous distribution level feeders. However maintenance on associated DC schemes connected to the devices should only be done on the same frequency as maintenance on the relevant interrupting devices. Consideration should be given to exempting schemes that have a maintenance program in place on those distribution level devices from PRC-005 Standard-specified maintenance intervals. Such Standard-specified intervals could apply to interrupting devices that have no maintenance program in place. This standard is overly prescriptive. Owners of protection system equipment establish maintenance procedures and timelines based on manufacturers’ recommendations and experiences to ensure reliability. Maintenance intervals change with improved practices and equipment designs, and whenever that occurs PRC-005 will have to go through the revision process, which would be frequent and unnecessary if the standard were more general.

Group

Southern Company Transmission

JT Wood

Southern Company

No

1)Comment on Control Circuitry – Below in Figure 1 is a previous version of Table 1. It clearly shows 3 levels of monitoring for Control Circuitry. For Unmonitored schemes such as EM, SS, unmonitored MP relays, you must do a complete functional trip test every 6 years. For partially monitored schemes such as MP relays with continuous trip coil/circuit monitoring, you must do a complete functional trip test every 12 years. For fully monitored schemes where all trip paths are monitored, you do not have to trip test the scheme but you still have to operate the breaker trip coils, EM aux/lockout relays every 6 years. This is very clear and reasonable. The latest version of Table 1 is not very clear or reasonable. The previous Partially Monitored control circuit monitoring requirements were deleted and the Fully Monitored control circuit monitoring requirements were moved to Partially Monitored requirements. We are not sure why this major change in philosophy was made?? This makes all of our MP relay control schemes that continuously monitor trip coils/circuits fall into the unmonitored category and therefore requires a 6 year full functional trip test. For a scheme that monitors 99+% of the control scheme (and probably 100% of the control scheme that actually has problems) to be considered Unmonitored does not seem logical or reasonable to us. This puts these “highly monitored” schemes in the same category and requires the same maintenance requirements / intervals as EM relays with no alarms whatsoever. This also seems to contradict the intent of the following statement from the Supplementary Reference doc on page 9: Level 2 Monitoring (Partially Monitored) Table 1b This table applies to microprocessor relays and other associated Protection System components whose self-monitoring alarms are transmitted to a location (at least daily) where action can be taken for alarmed failures. The attributes of the monitoring system must meet the requirements specified in the header of the Table 1b. Given these advanced monitoring capabilities, it is known that there are specific and routine testing functions occurring within the device. Because of this ongoing monitoring hands-on action is required less often because routine testing is automated. However, there is now an additional task that must be accomplished during the hands-on process – the monitoring and alarming functions must be shown to work. Recommendation - Please consider going back to the previous table as shown below in Figure 1. It seems much clearer and reasonable. Feel free to convert the old wording to the latest wording. Figure 1 - Previous Table – Control Circuitry See Figure 1 in email documentation sent to Al McMeekin. Current Table – Control Circuitry (see pdf file) See pdf file PRC-005-2_clean_20 10June88131418.pdf in email documentation sent to Al McMeekin. 2) Comments: The comments

below are grouped by component type. The following (5) comments pertain to the maintenance intervals for protective relays: 1.Is the “verify acceptable measurement of power system input values” activity listed in the protective relay 6 year interval in Table 1a the same activity as the 12-year activity for Voltage and Current Sensing Inputs in the same table? 2.Please clarify the meaning of “check the relay inputs and outputs” that are specified to be checked for microprocessor relays at the following table locations: the protective relay 6 year interval in Table 1a, the protective relay 12-year interval in Table 1b. Is this referring to a check of the relay internal input recognition and output control ending at the relay case terminals, or is this referring to a check extending to the source (and target) of all inputs and outputs to the relay? The latter interpretation results in a repeat of the maintenance required for dc control circuitry. 3.Are the second, third, and fourth maintenance activities in the Table 1a Protective Relay, 6-year row those activities that apply to microprocessor relays? If so, we suggest rewording these items as follows: For microprocessor relays, verify that the settings are as specified, check the relay digital inputs and outputs that are essential to proper functioning of the Protection System, and verify acceptable measurement of power system analog input values.” 4.Please clarify the meaning of “Verify proper functioning of the relay trip contacts” found in protective relays with trip contacts 12 year interval in Table 1c. Is this verification a check of the relay internal contact to the relay case terminals or is this meant to be a trip check functional test? This category of component does not appear in table 1a or 1b. Should it? Is this activity the same as the protective relay Table 1b maintenance activity “output actions used for tripping”? If so, please make the wording match exactly to clarify. 5.Table 1c introduces the use of “Continuous” Maximum Maintenance Intervals. This is inconsistent with the Table 1a and Table 1b usage of the interval. In Tables 1a and 1b this interval is used to describe the maximum time frame within which the activities shown in “Maintenance Activities” must be completed. The table column “Maintenance Activities” has been used to identify those activities which must be performed in addition to those accomplished by the monitoring attributes. To maintain consistency in use of the interval and activity columns of Tables 1a, 1b, and 1c, each entry that uses the “Continuous” interval should be changed to N/A and the Maintenance Activities should be changed to either “No additional activities required” or “None, due to continuous automatic verification of the status of the relays and alarming on change of settings” [example given for Table 1c, Protective Relays] The following (8) comments apply to Maintenance Tables 1a, 1b, and 1c for Station DC supplies. 1)In Table 1a, Station dc supply, 18 calendar month, the verify item “Float voltage of battery charger” is not listed in Table 1b. Is this requirement independent of the level of monitoring and always required? If so, should it be added in to Table 1b and 1c, Station dc supply, 18 calendar months above the “Inspect:” section? 2)The 6 year interval maintenance activity for NiCad batteries in Table 1a and Table 1b should read “station battery” rather than “substation battery”. 3)It is recommended to simplify the Station dc supply sections in each of the three maintenance tables by relocating the common items that do not change dependent upon the level of monitoring. Specifically, the following rows of each of the three tables have identical maintenance requirements that are independent of the level of monitoring. The tables would be significantly simplified if these “monitor level independent” requirements are moved outside of the table: a.Station dc supply; 18 calendar months; Inspect: “ b.Station dc supply (that has a s a component Valve Regulated Lead Acid batteries) c.Station dc supply (that has as a component Vented Lead Acid batteries) d.Station dc supply (that has as a component Nickel Cadmium batteries) e.Station dc supply (battery is not used) 4)Table 1a has 18 calendar month requirements for “Station dc supply (battery is not used)”. This category is missing from Table 1b – was this intentional? 5)Table 1a has 6 calendar year and 18 calendar month requirements for “Station dc supply (battery is not used)”. This category is missing from Table 1c – was this intentional? 6)Please clarify the meaning of “Battery terminal connection resistance”. Does this apply only to multi-terminal batteries? Is this referring to the cables external to the battery (to the charger and load panel)? 7)Table 1c contains a Type of Protection System Component not found in any of the other tables: “Station dc supply (any battery technology). Is this the same as “Station dc supply” found in Tables 1a and 1b? 8)The Level 3 Monitoring Attributes for “Station dc supply (any battery technology)” are identical to the Level 2 Monitoring Attributes for “Station dc supply”. This appears to be duplicative in description with two different “maximum maintenance intervals” and “maintenance activities” listed. The following (3) comments pertain to the Voltage and Current Sensing Input component type: 1)Why is “signals” bolded in the Table 1a row for this component type? 2)Are the Table 1a, 12 year maintenance activities for this component type a duplication of the Table 1a, Protective relay, 6 year maintenance activity for microprocessor relays (verify acceptable measurement of power system input values)? 3)Why is this component type highlighted in bold in Table 1c? The following (8) comments pertain to the Control and Trip Circuit component type: 1)Why are microprocessor relay initiated tripping schemes excluded from the 6 year complete functional testing? The auxiliary relay operations resulting from these initiating devices are just as likely to stick (mis-operate) as those initiated from electromechanical devices. 2)We propose simplifying Table 1a for this component type by grouping the two 6 year and the two 12 year interval maintenance lines into two rather than four table rows. The 6 year interval maintenance activities for the UFLS/UVLS systems could be addressed in the table row above using a parenthetical adder to the existing text = (for UFLS/UVLS systems, the verification does not require actual tripping of circuit breakers or

interrupting devices). All of the other text in the UFLS/UVLS table row matches that found two rows above. The same parenthetical adder in the first 12 year interval row for this component type would eliminate the need for the (UFLS/UVLS Systems Only) row for 12 year intervals. 3)If the two rows are combined as suggested previously – this comment is irrelevant: The Table 1a 6 year interval activity for UFLS/UVLS Systems Only is missing the word “contacts” after auxiliary. 4)There appears to be no difference in the 6 year interval maintenance activities for this component type in Table 1a and Table 1b. Table 1b monitoring attributes include “Monitoring and alarming of continuity of trip circuits”, but the interval between electrically operating each breaker trip coil, auxiliary relay, and lockout relay remains at 6 years. What maintenance activity advantage do the Level 1b monitoring attributes provide? 5)The difference between the two DC Control Circuits in Table 1b (on page 14) is unclear. What is the difference between the “Control Circuitry (Trip Circuits)” and the “Control and trip circuitry”? We propose combing the multiple table rows for this component type into a single line item for this component type, as it takes a combination of the protective relay action, any auxiliary relay, and the circuit breaker to comprise a complete tripping system. 6)We have three questions on the monitoring attributes given for this component type on page 14: a) Does the attribute beginning “Monitoring of Protection …” indicate a requirement to monitor every input, every output, and every connection of every Protection System Component involved in each tripping scheme? b) Does the attribute beginning “Connection paths…” related to monitoring of communication paths? c) Does the attribute beginning “Monitoring of the continuity…” require the presence of coil monitoring of any auxiliary relay whose contact is encountered when tracing a tripping path from a protective relay to a breaker? 7)Are the Table 1c attributes for this component type different from the monitoring described in Table 1b beginning “Connection paths…”? 8)Are there no requirements to operate any relays functionally for “Protection System control and trip circuitry” in Table 1c? The devices need to be exercised some or they will not be reliable. The following (1) comment pertains to the Associated communications system component type: 1)The Table 1b monitoring attribute for this component type (communications channel monitor and alarm) clearly should (and does) eliminate the Table 1a, 3 month interval activity (verifying the communication system is functional). The common maintenance activities found in Table 1a (6 year) and Table 1b (12 year) should be same interval – either 6 or 12.

Yes

Yes

Yes

Yes

General FAQ 1)Attached is an elementary drawing showing a typical transmission line relay protection scheme utilizing SEL-351S and SEL-321 microprocessor relays. Does this qualify as partially monitored control circuitry? See pdf file Control Elementary_1-07-13 & Control Elementary_2-07-13in email documentation sent to Al McMeekin. •If not, and this is an unmonitored circuit, what would be the appropriate maintenance interval (6 years or 12 years) for the Control and Trip Circuits from page 9 of PRC-005-2? The description of the two choices is ambiguous See pdf file PRC-005-2_clean_2 010June8.pdf in email documentation sent to Al McMeekin. •If not, what would it take to make this circuit partially monitored (including inputs)? 2) Table 1a, page 9, row 2 (Voltage and Current Sensing Inputs) Question – Does this mean secondary quantities from CT’s and VT’s only? If so, please consider changing the wording from “Voltage and Current Sensing Inputs” to “CT and VT secondary quantities”. 3) Table 1a, page 9, row 3 (Control and trip circuits with EM contacts) Question - Does "electromechanical trip or auxiliary contacts" mean EM protective relay outputs and EM tripping/lockout tripping contacts only? Or does it also include any part of the trip circuitry such as cutout switch contacts and breaker trip coils plus associated aux. breaker contacts. For example, the schematic with a microprocessor relay described in the first bulleted item could be considered an unmonitored EM control circuitry (6 year interval). Is this because of the mechanical breaker aux contacts, breaker maintenance switch, and FT-1 test switch? If so, how could any control circuitry fall in the solid state trip contacts category (12 year interval)? 4) Table 1a, page 9, rows 3, 4, 5, 6 – Please consider rewording these to make it clear where control schemes with MP relays that do have trip coil / circuit monitors but don’t meet the Partially Monitored requirements fit. (Does this type scheme fit in the 6 year trip test category or the 12 year category?) 5) Table 1a, page 12, row 1 – The maintenance requirements are not the latest wording used for all other Protective Relays. Please consider changing for consistency. 6) Table 1b, page 13, row 1 (Protective Relays) - Line three of the maintenance activities requires us to check inputs and outputs. The last maintenance item is to verify correct operation of output actions that are used for tripping. Question - How is this different than the line three maintenance requirements to check inputs and “outputs”? 7) Table 1b, page 14, rows 1 and 2 – Consider combining these into

one row. The maintenance intervals and maintenance activities are these same. Please specify what is required for UFLS and UVLS control schemes). 8) Table 1b, page 14, rows 1 – The first sentence is very general for a monitoring attribute. ("Monitoring of Protection System component inputs, outputs, and connections with reporting of monitoring alarms to a location where action can be taken.") Consider deleting this row or make it more specific. 9) Table 1b, page 14, row 2 [Control Circuitry (Trip Circuits) (except for UFLS/UVLS)] Question: Should there be a 12 year functional trip test requirement for this partially monitored control circuitry? Should this be added to Table 1b? 10) Table 1b, page 14, row 1 [Control Circuitry (Trip Circuits) (except for UFLS/UVLS)] - It states Monitoring of Protection System component inputs, outputs, and connections … Question – what does "inputs" mean? There are Protection System components such as protective relays, control circuitry, station dc supply, associated communications systems, etc. Does this mean we must monitor inputs to any or all of these Protection System components? How would this be accomplished? 11) Table 1c, page 18, row 4 – Should there still be a requirement to trip breakers by all trip coils every 6 years? Supplementary Reference Document 12) Question on Figure 1, page 27 - Box 1 denoting Protection Relays includes Aux devices, Test or Blocking Switches. The Aux devices, Test or Blocking Switches should be part of Box 3 (Control Circuitry). Please correct or note accordingly. FAQ Document 13) On Page 30, please add an Example with Partially Monitored (Level 2) Control Circuit. 14) On the Control Circuit Decision Tree on page 36, the flow chart does not match the current Table 1 requirements. They match the previous version which is described in the first question of this document. We still propose leaving the flow chart on page 36 as is and change Table 1 to match the original requirements. 15) Please consider adding a diagram /elementary drawing of a Partially Monitored Control Circuit showing the trip output contacts, inputs, etc that must be monitored to meet the Monitoring Attributes / Requirements. A diagram showing an Unmonitored control scheme and what it would take to make it Partially Monitored would be helpful too. Additional General FAQ 16)PRC-005-2, R1 requires the Functional Entity to establish a Protection System Maintenance Program (PSMP). It is not clear if this standard establishes a specified frequency for reviewing and updating the PSMP itself or the PSMP criteria outlined in subparts 1.1 through 1.4. By comparison, EOP-005-1 System Restoration Plans, requires the Functional Entity to (a) have a restoration plan and (b) to review and update the restoration plan annually (see EOP-005-1, R1 and R2). This approach to a comprehensive and periodic review considers the PSMP as a whole and is independent of the specific maintenance methods (time-based, condition-based, or performance-based) and maintenance intervals for those respective methods. It is noted however that PRC-005 Attachment A mentions annual updates to the list of Protection System component. According to the Attachment's subtitle, Criteria for a Performance-Based Protection System Maintenance Program, this annual update seems limited to performance-based maintenance and not inclusive of other maintenance methods. The recommendation is to evaluate the need for a periodic review of the PSMP as a whole. 17)R1, Criteria 1.1, and companion VSL. This Criterion requires the identification of all Protection System components. The VSL for R1 uses a percent-based approach to parse out different quantities of components across the four VSL categories. This implies that a Functional Entity must have the ability to put a numerical quantity on its various components and should be able to demonstrate within certain tolerances that its components are included (or counted). If the number of components within scope amount to hundreds or thousands of individual items, the PSMT SDT should consider the Functional Entities' ability to track and quantify the items for a compliance demonstration. If an entity is not able to reasonably quantify which components are in scope, demonstrating compliance on a percent-basis may prove difficult or impossible. Further review may indicate the need to reformat the VSL. Similar concerns are noted in other VSLs (R2, R3, and R4) and in Attachment A where percentage-of-components are mentioned. 18)R4 essentially requires the Functional Entity to implement its PSMP. R4 takes care to highlight the specific task of "identification of the resolution of all maintenance correctable issues." It is noted that other "identification tasks" are included as criterion for the PSMP in R1. If these tasks are all appropriately categorized as identification-type tasks, it may be more efficient to restructure the standard by incorporating this task into R1 with the other criteria. R4 could remain as a basic implementation requirement with more detail provided in subparts 4.1, 4.2, and 4.3. 19)Footnote No. 2 describes maintenance correctable issues and could be interpreted as a potential new term for inclusion in NERC's Glossary of Terms. The PSMT SDT should conduct further review of this terminology as a potential new Glossary term. 20)At R4, subpart 4.3, insert "design" such that it reads as follows: "Ensure that the components are within acceptable design parameters at the…" Also, this subpart duplicates Footnote No. 3 which describes "maintenance correctable issues" and was established in the main requirement R4 at Footnote No. 2.

Group

SERC Protection and Control Sub-committee (PCS)

Joe Spencer - SERC staff and Phil Winston - PCS co-chair

SERC Relaibility Corp.

No

Clarifications need to be made on testing requirements on trip contacts relative to microprocessor vs. EM relays. There appears to be an inconsistency in the use of "check" vs.

“verify” in the tables. Also, Table 1B, in the second to last row, should be referring to UFLS rather than SPS. Also, note that M2 incorrectly excludes distribution provider. In battery maintenance table, we suggest that “cell/unit” be changed to “cell or unit.”
The SERC PCS expresses no opinion on this question.
Yes
The SERC PCS expresses no comments on this question.
No
In R1, a “Failure to specify whether a component is being addressed by time-based, condition-based, or performance-based maintenance” by itself is a documentation issue and not an equipment maintenance issue. Suggest this warrants only a lower VSL, especially when one of the required components can only be time based.
The SERC PCS expresses no opinion on this question.
The SERC PCS expresses no opinion on this question.
Descriptors in the "type of the protection system component" column need to be consistent between 1A, 1B and 1C. Also, in the tables, please clarify “complete functional trip test” for UVLS and UVLS trip tests since the breaker is not being tripped. Facilities Section 4.2.1 “or designed to provide protection for the BES” needs to be clarified so that it incorporates the latest Project 2009-17 interpretation. The industry has deliberated and reached a conclusion that provides a meaningful and appropriate border for the transmission Protection System; this needs to be acknowledged in PRC-005-2 and carried forward. We commend the SDT for developing such a clear and well documented second draft. The SDT considered and adopted many industry comments on the first draft. It generally provides a well reasoned and balanced view of Protection System Maintenance, and good justification for its maximum intervals. The SERC Protection & Control Subcommittee generally agrees that this second draft will be beneficial to BES reliability.
Individual
John Canavan
NorthWestern Corporation
No
Table 1a - Rows 3 & 4 (control and trip circuits) - add language in the Maintenance Activities - "except that verification does not require actual tripping of circuit breakers or interrupting devices"
Individual
Dan Roethemeyer
Dynegy Inc.
No
We agree with all proposed intervals in Tables 1a, 1b, and 1c except the 3 calender month interval for Associated Communication Systems in Table 1a. We suggest using a 1 year interval because all other elements of the Protection System are being verified a minimum of every 3 years. Therefore, we believe annual verification of Associated Communication Systems is sufficient.
Yes
Yes
Yes
Yes
Yes
For protection system component verification, flexibility is needed subsequent to a system event to allow the analysis of a protection system operation to be utilized as a protection system component verification. We believe this flexibility is needed and should be incorporated in Requirement R4.

Individual
Robert Ganley
Long Island Power Authority
No
In Table 1c it is required to report the detected maintenance correctable issues within 1 hour or less to a location where action can be taken to initiate resolution of that issue. Even for a fully monitored protection system component it can be difficult to report the action in 1 hour. LIPA recommends a 24 hour period for both Level 2 and Level 3 reporting of maintenance correctable issues. The time identified is report time and not response time to correct issue. LIPA seeks clarification on “to a location where action can be taken”. Some examples in the FAQ will help in this clarification. What type of documentation is required to show compliance that maintenance correctable issues have been reported? What is the basis of the various Maximum Maintenance Intervals tabulated in Table 1a-Time based maintenance?
Yes
No
Two most recent performances of each distinct maintenance activity for the Protection System components will require data retention for an extended period of time. For example, in certain cases, battery maintenance is on a 12 year cycle which suggests that records need to be retained for 24 years. LIPA suggests retaining data for the most recent maintenance activity. LIPA seeks clarification on “on-site audit” – does it include audits by any of the following - NPCC/NERC/FERC. Also, several small entities do not have on-site audits and participate in off-site audits. Hence, LIPA suggests deleting “on-site” from the requirement. In addition further clarification is required to the Data Retention section to coordinate with the statement in FAQ (Section IV.d p. 22 redline).
No
R4 under Severe VSL mentions – Entity has failed to initiate resolution of maintenance-correctable issues. What proofs will satisfy the requirement that the entity has initiated the resolution. R1 under Severe VSL – LIPA suggests moving the first criteria “The entity’s PSMP failed to address one or more of the type of components included in the definition of “Protection System” under High VSL since this criteria cannot have the same VSL level as “Entity has not established a PSMP”.
No
There is no guidance on how to calculate the total number of components and thus, the percentages under different severity levels. FAQ provides some insight into how an entity can count components however; an example in the reference document will provide clarity. Page 7 of the redline version of Supplemental Reference – bullet 1 under Maintenance Services, paragraph 2, it says “ If specific protection scheme components have demonstrated correct performance within specifications, the maintenance test time clock is reset for those components. LIPA believes that resetting the time clock will make tracking difficult (unless entities have a sophisticated automated tool for tracking). Another option where an entity can take credit for a correct performance within specifications at the time of the maintenance cycle should be included.
Yes
Table 1a under Maintenance Activities for Control and trip circuits with unmonitored solid-state trip or auxiliary contacts (UFLS/UVLS Systems Only) states: Perform a complete functional trip test that includes all sections of the Protection System control and trip circuit, including all solid-state trip and auxiliary contacts (e.g. paths with no moving parts), devices, and connections essential to proper functioning of the Protection System., except that verification does not require actual tripping of circuit breakers or interrupting devices. The word complete may be removed as it requires actually tripping the breakers. The sentence that tripping of the circuit breakers is not required contradicts with the word complete. More specifics are required to spell out the adequate testing e.g. up to the lockout with the trip paths isolated etc. Table 1a under Maintenance Activities for Station dc Supply (used only for UVLS or UFLS) states: Verify proper voltage of the dc supply. Is this requirement applicable to the distribution substations only? Table 1a under Maintenance Activities for Station dc supply (battery is not used) – states Verify that the dc supply can perform as designed when the ac power from the grid is not present. - Please clarify this requirement. Table 1a for Associated communications systems - specify the group for the applicability of this requirement. BPS,BES,UFLS etc. Table 1a under Maintenance Activities for Associated communications systems states – Verify that the performance of the channel meets performance criteria, such as via measurement of signal level, reflected power, or data error rate. Why is this required? The requirement "Verify proper functioning of communications equipment inputs and outputs that are essential to proper functioning of the Protection System. Verify the signals to/from the associated protective relays seems sufficient to ensure reliability. Table 1a under Maintenance Activities for Relay sensing for Centralized UFLS

OR UVLS systems UVLS and UFLS relays that comprise a protection scheme distributed over the power system states: Perform all of the Maintenance activities listed above as established for components of the UFLS or UVLS systems at the intervals established for those individual components. The output action may be breaker tripping, or other control action that must be verified, but may be verified in overlapping segments. A grouped output control action need be verified only once within the specified time interval, but all of the UFLS or UVLS components whose operation leads to that control action must each be verified. Clarify what is meant by overlapping segments? What is the specified interval? Is actual breaker tripping required?

Group

Pacific Northwest Small Public Power Utility Comment Group

Steve Alexanderson

Central Lincoln

No

We agree with most of the changes from the last draft. However, the phrase “Verify Battery cell-to-cell connection resistance” has entered the table where it did not exist before. On some types of stationary battery units, this internal connection is inaccessible. On other types the connections are accessible, but there is no way to repair them based on a bad reading. And bad cell-to-cell connections within units will be detected by the other required tests. This requirement will cause entities to scrap perfectly good batteries just so this test can be performed, with no corresponding increase in bulk electric system reliability while taking an unnecessary risk to personnel and the environment. And because buying battery units composed of multiple cells allows space saving designs, entities may be forced to buy smaller capacity batteries to fit existing spaces. This may end up having a negative effect on reliability. Suggest substituting “unit-to-unit” wherever “cell-to-cell” is used in the table now.

Yes

Yes

No

is possible that a component that failed to be individually identified per R1.1 was included by entity A’s maintenance plan. This documentation issue gets a higher VSL than entity B that identified a component without maintaining it. We suggest the R1 VSL be change to Low, since we believe lack of maintenance to be more severe than documentation issues.

Yes

Yes

The level 2 table regarding Protection Station dc supply states that level 1 maintenance activities are to be used, but then goes on to give a list of Maintenance Activities that don’t match those in level 1. Which activities shall we use? Same situation for Station DC Supply (battery is not used) where the 18 month interval is missing. IEEE battery maintenance standards call for quarterly inspections. These are targets, though, not maximums. An entity wishing to avoid non-compliance for an interval that might extend past three calendar months due to storms and outages must set a target interval of two months thereby increasing the number of inspections each year by half again. This is unnecessarily frequent. We suggest changing the maximum interval for battery inspections to 4 calendar months. For consistency, we also suggest that all intervals expressed as 3 calendar months be changed to 4 calendar months. We are concerned over R1.1, where all components must be identified, without a definition for the word component or the granularity specified. While the FAQ gives a definition, and allows for entity latitude in determining the granularity, the FAQ is not part of the standard. We believe this will allow REs to claim non-compliance for every three inch long terminal jumper wire not identified in a trip circuit path. We suggest that the FAQ definitions be included within the standard.

Group

PNGC Power

Margaret Ryan

PNGC Power

No

We agree with most of the changes from the last draft. However, the phrase “Verify Battery cell-to-cell connection resistance” has entered the table where it did not exist before. On some types of stationary battery units, this internal connection is inaccessible. On other types the connections are accessible, but there is no way to repair them based on a bad reading. And bad cell-to-cell connections within units will be detected by the other required tests. This requirement will cause entities to scrap perfectly good batteries just so this test can be performed, with no corresponding increase in bulk electric system reliability while taking an unnecessary risk to

personnel and the environment. And because buying battery units composed of multiple cells allows space saving designs, entities may be forced to buy smaller capacity batteries to fit existing spaces. This may end up having a negative effect on reliability. Suggest substituting "unit-to-unit" wherever "cell-to-cell" is used in the table now.

Yes

Yes

No

It is possible that a component that failed to be individually identified per R1.1 was included by entity A's maintenance plan. This documentation issue gets a higher VSL than entity B that identified a component without maintaining it. We suggest the R1 VSL be change to Low, since we believe lack of maintenance to be more severe than documentation issues.

Yes

Yes

The level 2 table regarding Protection Station dc supply states that level 1 maintenance activities are to be used, but then goes on to give a list of Maintenance Activities that don't match those in level 1. Which activities shall we use? Same situation for Station DC Supply (battery is not used) where the 18 month interval is missing.

Individual

Terry Harbour

MidAmerican Energy Company

No

In the tables trip circuit has been replaced by "control and trip circuit". From the context of the standard and the reference and frequently asked question documents it is clear that the requirement is to test the trip circuit only. Adding the word "control' introduces ambiguity and the potential to imply the closing circuit of the interrupting device also requires testing under the standard. The word "control" should be removed. On this same subject the nomenclature in Table 1b for type of protection system component is not consistent with Table 1a. In Table 1b in the Level 2 Monitoring Attributes for Component column for Relay sensing for centralized UFLS or UVLS systems there is a reference to SPS. This reference should likely be to UFLS/UVLS. In Table 1a functional testing of associated communications systems is included with a maximum maintenance interval of 3 calendar months. Testing of this equipment at that frequency is not believed to be necessary. It is suggested that the interval be changed to 12 calendar months. For control and trip circuit maintenance the requirement includes "a complete functional trip test". In order to accomplish this type of testing given current design of lock-out relay and interrupting device trip circuitry multiple breakers and line terminal outages would be required simultaneously. In addition complete functional testing has the potential to result in unintentional tripping of equipment that could cause equipment damage and customer outages. Segmentation of trip circuits by lifting wires has the potential for incorrect restoration following testing. This type of testing has the potential to degrade system reliability as multiple entities schedule this work. An alternate to complete functional testing that does not potentially degrade system reliability should be substituted.

Yes

No

Verification of compliance with the maximum time intervals for testing only needs to include retention of the documentation of the two most recent maintenance activities. The phrase "or to the previous on-site audit (whichever is longer)" should be deleted.

No

The lower VSL specification for R4 should allow for a small level of incomplete testing. Suggest changing "5% or less" to "from 1% to 5%".

Yes

Yes

From the compliance registry criteria for generator owner/operator and the language in 4.2.5.3 it is implied that the intent is that protection systems for individual generators less than 20 MVA would not be covered by PRC-005. To make this clear in the PRC-005-2 standard, the following footnote to section 4.2.5.3 is recommended: Protection systems for individual generating units rated at less than 20 MVA in aggregated generation facilities are not included within the scope of

this standard. The Request for Interpretation of a Reliability Standard submitted March 25, 2009 indicates that a protection system is only subject to the NERC standards if the protection system interrupts the BES and is in place to protect the BES. The following changes are recommended to clarify this in the standard: A.3. Purpose: To ensure all transmission and generation Protection Systems protecting and affecting the reliability of the Bulk Electric System (BES) are maintained. A.4.2.1. Protection Systems applied on, or and designed to provide protection for the BES. B.R1. Each Transmission Owner, Generator Owner, and Distribution Provider shall establish a PSMP for its Protection Systems that use measurements of voltage, current, frequency and/or phase angle to determine anomalies and to trip a portion of the BES and that are applied on, or and are designed to provide…….. FERC Order 693 includes the directive that "testing of a protection system must be carried out within a maximum allowable interval that is appropriate to the type of the protection system and its impact on the reliability of the Bulk-Power System". If unanticipated conditions (e.g. force majeure) of the bulk-power system do not allow outages to complete protection system maintenance as required by the standard without compromising the reliability of the system delay of the particular maintenance activity should be allowed. This provision should be included in the standard in R4.

Individual

Jonathan Appelbaum

The United Illuminating Company

Yes

In general yes. There are concerns with verifying cell-to-cell resistance in Batteries. On some battery sets this is not possible to do.

No

: The VRF for R1 should be Low. It is administrative to create an inventory list. If R1 failed to be executed but the other requirements wee executed fully then the BES would be properly secured. Compare this against the scenario of performing R1 but failing to perform the other tasks; in which case the BES is at risk. UI recognizes that the SDT considers the inventory as the foundation of the PSMP but it is not the element of the PSMP that provides for the level of reliability sought. R1 should be VERF Low and R2 thru R4 VRF is Medium. UI agrees with the Time Horizon.

Yes

Yes

No

Include a detailed example of an Inventory list. Allow for different means of maintaining the lists electornically, that is, as spreadsheets, or databases.

No

What actions are taken if the owner can not perform a specific activity elaborated on the tables due to the design of the equipment? Is the owner in non-compliance? Must the owner only accept equipment solutions that allow the maintenance activities elaborated in the standard to be performed?

Individual

Lauri Dayton

Grant County PUD

PRC005-02 Comment We offer some comment for your consideration for incorporation into the Standard PRC-005-02 (draft) as presented in the May 27th 2010 PRC 005-02 "Standard Development Roadmap." RE: Comment on the 2nd Draft of the Standard for Protection System Maintenance and Testing" 1) The term "The Protection System Maintenance Program" (Page 2) appears to be centered on the concept of maintaining specific components as stand alone objects, and therefore infers that the resultant documentation be organized in a similar fashion. Neither is optimal from a practical or a functional perspective. Many rational work practices combine components (example, meggering from the relay input test switch through the cables and the CTs) in the interest of minimizing circuit intrusion and human error. For this reason, such maintenance practices are superior from a reliability standpoint. The t emphasis on "components" in the current draft is, at best, tangential to NERC's stated goal and purpose of PRC-005 to

improve reliability. How would we fix this? We would insert the phrase “or Element”—as defined in NERC’s Glossary of Terms to include “one or more components / devices with terminals that measures voltage, current, frequency and/or phase angle” to determine anomalies and to trip a portion of the BES” immediately after any occurrence of the word “component” in each of the Requirements or in a Definition paragraph, intending it to be applied globally to R-1 through R4. This would foster the validity of maintenance activities being applied to aggregations of components — “Elements”—such as would occur during Verification of DC control circuitry or through the employment of fault data analysis. 2) Protection System Maintenance Program. The categorization of maintenance into 7 maintenance activities is welcomed as advancing practices which foster BES reliability. Likewise we find the clarifications denoted by superscripts 1 and 2 helpful. However….under C: MEASURES: M1, the last sentence of the paragraph provides: “For each protection system component, the documentation shall include the type of maintenance program applied (time based, etc), maintenance activities (1 or more of the 7 identified) and maintenance intervals…..” This measure goes beyond the requirements of the standard and should be revised consistent with the deletion of the previous R.1.1 as shown in track changes under the version 2 draft which had included the identification of the maintenance activity associated with each component. COMMENT: It should be apparent in reviewing the evidence that one or more of the 7 listed activity categories are represented. The proscription to explicitly call out these categories is thus redundant---the requirement being that at least one has to be identifiable in the program—and will cause unnecessary complications to the Entity and interpretation issues in the Compliance monitoring effort. We recommend that the words “maintenance activities” be removed from the last sentence in the paragraph pertaining to C: MEASURES: M1. We also believe it is unnecessary to restate the definition of “Protection System” in the Measure. 3) A fundamental incompatibility exists between NERC’s proposition of “maximum maintenance (time based) interval” and the typical CMMS PM generation algorithm. SPCTF members and regional compliance engineers have verbally represented that the “maximum maintenance interval” is a precise term “not to exceed—even by one day---“ maximum, otherwise generating a fine-able Violation and that fixed intervals plus or minus a certain additional period of time to account for other operational exigencies are no longer going to be permitted. There is always an interval between the time a CMMS PM is issued and its completion. The time interval between the issue date and the completion date is normally a period of time to allow maintenance staff to schedule their work in an orderly fashion. The maximum time based interval is fixed by the time period specified for issuance of the planned maintenance (PM) work order (e.g. every 3 years) and the defined period of time to complete the work (usually described as a percentage of the PM interval e.g. 25%). So predicating a PM issue date based on the last issue date plus a percentage of the interval time to complete the work is not inconsistent with a fixed time interval. Under the proposed tables, however, there is no accommodation for this predominate maintenance practice. Even if maintenance intervals were shortened to ensure that the required completion date as defined by program intervals does not exceed the NERC maximum interval as described in the tables, this will not be sufficient because auditors may conclude that the tables permit the use of only a single defined interval and not permit an additional defined period of time to schedule and complete the work. Remember, it is immaterial whether the Entity’s interval is more stringent than the NERC maximum, a violation may occur if the maintenance is not performed within the Entity’s maintenance interval, even if it is shorter than the NERC maximum. A precise maximum interval requires constant managerial intervention on the part of the Entity to ensure that operational exigencies do not cause violations on a component-by component (or element) basis. The shortened interval would tend to destroy the sense of rhythm and pattern which should be manifest in a time based program. Further, after one or more iterations, seasonal restrictions on outages begin to impinge requiring adjustments to be made to the Maintenance Program document to adjust the interval or maintenance activity. At best, it results in a clumsy way of doing business and requiring significantly more oversight into keeping the maintenance program document updated for presentation to auditors rather than focusing on prudent maintenance activities as desired by FERC Order 693. Auditing is not any more difficult if the Maintenance Program also specifies that a percentage of a fixed target / time interval is allowed to schedule and complete the work—as meeting the interval requirements of a time based maintenance program. This method allows for a fixed time for issuance of the work order and maintenance personnel some flexibility to schedule and complete their work within a defined period of time. We recommend to vote against adoption until some more workable solution is identified and disseminated, satisfying both the Compliance Authority and the affected Entities. Specifically, we recommend that the drafting team adopt “target” intervals with a +/- range of acceptability, based on percentage or a fixed time per interval, which can be global for the Program or specific to the elements or components in question. The target intervals must be stated in the PSMP, the range of acceptability easily calculable and enforceable, and within the maximum intervals to be identified in the tables 1a, b, and c, satisfying compliance issues. This also allows the Entities to rationally plan their maintenance using existing CMMS technologies. 4) Within the Violation Security levels, we are aware of no activity by NERC to differentiate the relative criticalitiy of components or Elements of the BES system. For example, protection system components or Elements in a regional switchyard may present a larger potential for disruption of the BES in the

event of a mis-operation than does one associated with one generator among fifteen others and which is more electrically remote from and of less consequence to the BES. Unless and until this issue is addressed, both the PRC-005 maintenance and documentation will be less effective and more expensive than it could be. 5) PRC-005-02's proposed effective date is "See Implementation Plan." This is not adequate to provide regulated entities with appropriate notice of the Effective Date of PRC-005-2 standard. " Additionally, NERC has not posted the "Implementation Plan" for comment in the same manner as the proposed standard and thus we are not able to comment on the schedule provided in the Plan. We understand that the retention and documentation cycles go back three years and that a regulated entity, depending on the effective date of this standard and the entity's audit cycle, will be audited to both PRC-005-1 and PRC-005-2 during the same audit period. Some further discussion should be given to allowing comment on the Implementation Plan because of the potential overlapping requirements during a single audit cycle.

Individual

Mark Fletcher

Nebraska Public Power District

No

It would be very helpful in Table 1a, 1b, and 1c to reference the FAQ or Supplemental Reference by page number and section number for the corresponding Maintenance Actiivity statements. Table 1a, Control and Trip Circuits with electromechanical trip or auxiliary contact – how is the control and trip circuit functional trip test performed without affecting the BES or without tripping more than just the breaker (trip coil)? What is the basis for an actual trip of the breaker that will affect the BES. Functional trip testing will require extensive analysis and could involve an extensive testing evolution to ensure the correct circuit is tested without unexpected trip of other components, particularly for generator protection systems. The complexity of the system and the test would be conducive to an erro that resulted in excessive tripping, thus affecting the reliability of the BES. It would seem that the potential for an adverse affect from this test would be greater than the benefit gained of testing the circuit. In addition, scheduling outages to perform the functional trip testing in conjunction with other outages required to perform maintenance and other construction activities will be difficult due to the large number of outage requiremetns for the fucntional testing. This will challenge the BES more often and thus reduce reliability. Table 1a, Control and Trip circuits with electromechanical trip or auxiliary contacts - What is the differentiation between control and trip circuits? The FAQ appears to use the term interchangeably. • Table 1a, Associated communication systems - What is the basis for checking that the associated communication equipment is functioning every 3 calendar months for unmonitored components?. NPPDs experience indicates that a check every 6 months is sufficient.

Yes

Please provide an example of how the compliane percentage will be calculated for the implementation plan.

Yes

Additional guidance on what is accepatable evidence is always good.

Yes

Yes

Is this document considered part of the standard and may be referenced during audit and self-certification as an authentic source of informaiton?

No

FAQ 2.G, page 24 – NPPD believes system reliablity will be decresed if an entity is considered non-compliant for exceeding a PSMP stated interval that is within the PRC-005-2 Maximum Maintenance Interval. Considering an entity non-compliant for such a situation will encourage establishment of intervals that only meet the minimum standard. There should be one standard interval that all entities must be monitored against. If an entity wants to perform maintenance more frequently, it should not be subject to non-compliance if it misses its target but meets the Maximum Maintenance Interval in the standard. There are definitions at the beginning of the FAQ that should be contained in the NERC definitions and not in an FAQ. Placing these in an approved definition will help avoid interpretation issues that would arise during future audits.

4.2.5.1 (And elsewhere in the standard) Please define auxiliary tripping relays. 4.2.5.5 Do station "system connected" service transformers that do not supply house load for the generating unit, other than during start up or emergency conditions, fall under this clause? If so, can these transformers be eliminated if the house load can be back-fed from "generator connected" service transformer switchgear? What if there are redundant "system connected" feeds? R1 1.4 Clarification requested. This wording would suggest all battery activities fall under Table 1.a. exclusively. R4 4.3 Does initiation of activities require documentation, or is inclusion of "initiation" in the testing procedure sufficient evidence? Tables 1b &1c: Suggestion: If at all possible, combine and simplify. The number of sub clauses and nuances that are being described in these sections (with little change to interval or procedures for that matter) is overwhelming.

These two tables are setting RE's and System Owners up for making errors. Implementation and auditability should be the focus of this standard, SIMPLIFY. • SPS – Does the output signal need to be verified, or does the actual expected action need to be verified. Actual expected action would affect electrical generation production for NPPD's SPS.
Group
Tennessee Valley Authority
Dave Davidson
Transmission Operations and Maintenance (TOM) Support Group
No
The requirement to measure internal ohmic values of the station dc supply batteries every 18 months is excessive. The interval should be 36 months. Our experience from performing our routine maintenance program including cell impedance testing at 3-year intervals has been that the program is fully adequate in monitoring bank condition.
Yes
No
The Violation Severity Level Table listing for Requirement R4 lists the following under "Severe VSL". "Entity has failed to initiate resolution of maintenance-correctable issues" The threshold for a Severe Violation in this case is too broad and too subjective. The threshold needs to be clearly defined with low, medium, and high criteria.
No
There needs to be a defined method of deferral when equipment can't be gotten out of service until a scheduled outage. Give some examples of what "inputs and outputs that are essential to proper functioning of the Protection System" are. Define what a "Control and Trip Circuit" is. Is there one per relay? Do I have to have a list of them in my work management system?
No
If a relay is tested during a generator outage, what date is allowed to be used for compliance - actual test date or date equipment was returned to service? These are usually only a few weeks apart, but may be as much as three months different.
Individual
Brian Evans-Mongeon
Utility Services
With regard to DPs who own transmission Protection Systems, the standard is still very unclear on when a DP owns a transmission Protection System. Many DPs own equipment that is included within the definition of a Protection System; however, ownership of such equipment does not necessarily translate directly into a transmission Protection System under the compliance obligations of this standard. DPs need to know if this standard applies to them and right now, there is no certain way of determining that from within this language or previous versions of this standard. Additionally, the NPCC Regional Standards Committee withdrew a SAR on this very subject as we informed the question would be addressed in this proposal.
Group
Corporate Compliance
Silvia Parada Mitchell
NextEra Energy, Inc.
No
Battery visuals should be changed from 3 months to 6 months. Electrolyte levels of today's lead-calcium batteries are relatively stable for a 6 month period compared to lead-antimony batteries used in the past.

Individual

Charles J.Jensen

JEA

No

1. R1.1 What is a Protection System component? Could the SDT provide a better understanding of what is meant by component? R4: A “Failure to specify whether a component is being addressed by time-based, condition-based, or performance-based maintenance” by itself is a documentation issue and not an equipment maintenance issue. Suggest this warrants only a lower VSL, especially when one of the required components can only be time based. 2. R4: Suggest a stepped VSL for “Entity has failed to initiate resolution of maintenance-correctable issues”. While we understand the importance of addressing a correctable issue, it seems like there should be some allowance for an isolated unintentional failure to address a correctable issue.

No

2. What role with the Supplementary Reference and FAQ play with reference to the proposed standard? We have a concern that the standard will stand-alone and not include the interpretations, examples and expalnations that are needed to properly apply these values in a compliance envoironment. There needs to be a method to include the FAQ and Supplementary Reference. The method will also need to allow for future modifications as the standard is revised, etc.

No

Data retention becomes a complex issue for maintenance intervals of 12 years where the last two test intervals are required to be kept, i.e. 24 years. It would seem much more reasonable to set a limt of two test intervals or the last regional audit, not having to keep some 24 years of documentation with maintenance systems changing and archival records somewhat problematic to keep.

No

We could find no rational provided for the % associated with each VSL, or component rationale used to determine the proposed values listed. Is this included in some documentation that is available but not included as part of this review?

No

The Supplementary Reference document is critical in our current compliance environment to be approved as part of ths standard and any standard modifications need to be kept in synchronization with the FAQ and the Supplementary Reference.

No

Yes the FAQ is also a very immportant document to be approved along with the standard. There must be a way to have the standard and the FAQ go hand-in-hand or the standard must be revised to include much of the FAQ.

The current interpretation by the SDT of paritally monitored is set at a higher bar than most uttilities use in the their current designs today. We all wish to take advantage of the microprocessor relays and their renowned and improved montoring capability. If TC1 is monitored by primary relay A and TC2 is monitored by primary relay B, and these relays in turn monitor their DC supplies, the vast majority of the system is monitored - (partially monitored), including all the control cable out to the remote breakers and their trip coils. To add to this some additional contacts within the scheme, located very near the primary relays, is extending the partially monitored bar to a higher level than most designs incorporate today. If you know that 98% of the DC control system is monitored - isn't that paritally monitored? Please consider changes to the SDT's current view of a paritally monitored protection systems.

Group

Arizona Public Service Company

Jana Van Ness, Director Regulatory Compliance

Arizona Public Service Company

No

The associated maintenance activities are too prescriptive. The activities needed to ensure the reliable service of the relay or device should be left up to the discretion of the utility.

Yes

No

The change to the Protection System definition and establishing a PSMP with prescriptive maintenance activities relative to the voltage and current sensing devices has created a situation where data from original or prior verification not being available or not at the interval to meet the data retention requirement. Although, methods of determining the integrity of the voltage

and current inputs into the relays were used to ensure reliability of the devices meets the utilities requirements, they may not meet the interval requirement and would then be considered a violation due to changes in the standard. Recommend a single exemption of the two recent most recent performances of maintenance activities to the most recent performance of maintenance activity in the first maintenance interval for this component due to the long maintenance interval, the changes in the standard definitions and the prescriptive maintenance activities.

Yes

Yes

Yes

The generator Facilities subsections 4.2.5.1 through 5 are too prescriptive and inconsistent with sections 4.2.1 through 4. Recommend this section be limited to description of the function as in the preceding sections. Clarification is needed on how the “Note 1” in Table 1a, which appears to be used in to define a calibration failure would be used in Time Based Maintenance. In PRC-005-2 Attachment A: Criteria for a Performance-Based Protection System Maintenance Program, a calibration failure would be considered an event to be used in determining the effectiveness of Performance Based Maintenance. It is unclear in how it will be used in time based maintenance.

Individual

Scott Berry

Indiana Municipal Power Agency

The proposed effective date working is confusing and maybe incorrect. It looks like the second part of the paragraph refers to the additional maintenance and testing required by requirement 2 of the current version of PRC-005-1. PRC-005-2 will be adding additional maintenance and testing. Since the current wording is confusing, we are not sure when we have to ensure the new testing is done on the protection equipment. When it comes to battery maintenance, the battery cell to cell connection resistance has to be verified. IMPA is not sure how the SDT wants this maintenace performed. Some battery banks are made up of individual battery cases with two posts at each end that contain two to four individual battery cells inside of each case. To actually tear down the individual cells in a case would be extremely hard and maybe impossible on the sealed cases without destroying the cases. It would be nice to describe how the SDT wants the connection resistance of battery cell to cell verified in the FAQ guide. In the same guide, the SDT might give insight on what is meant by verifing the state of charge of the individual battery cell/units (table 1A). It seems like measuring the voltage level of the individual battery would work for this verification, but addditional information of what the SDT wants for this verification would eliminate any doubt and help with being in compliant with this requirement.

Individual

Fred Shelby

MEAG Power

No

1. The descriptoins for the "type of protection system components" do not appear to be consistent between Tables, 1a, 1b and 1c. 2. The maximum maintenance interval for a lead-acid vented battery is listed at 6 calendar years for performing a capacity test.This type of test has been proven to reduce battery life and an interval of 10 to 12 years would be better. 3. The maximum maintenance interval for "Station DC supply" was set at 3 months. This is too short of a period and 6 months would be better. 4. The control and trip circuits associated with UVLS and UFLS do not require tripping of the breakers but all other protection systems require tripping of the breakers, this appears to be inconsistent? 5. Digital relays have electromagnetic output relays. Do they fall into the electromechanical trip or solid state trip? 6. Need for clarification: The standard indicates that only voltage and current signals need to be verified. Does this mean that voltage and current transformers do not need to be tested by applying a primary signal and verifying the secondary output?

Yes

Yes

Yes
It would be good to have the basis of the 5%, 10% and 15% defined. With time and experience these percentages may need to be changed.
No
Further clarification is needed. The information provided on verifying outputs of voltage and current sensing devices is confusing. In one part, it indicates that the intent is to verify that intended voltages and currents are getting to the relay apparently without regards to acccuracy. A pactical method of verifying the output of VTs and CTs is not identified and need to be identified.
No comment.
No comment.
Individual
James A. Ziebarth
Y-W Electric Association, Inc.
No
Many of the changes to the proposed standard are reasonable and improve the clarity of the standard and its requirements. However, Y-WEA concurs with Central Lincoln and FMPA on their comments regarding the testing of battery cell-to-cell connection resistance. Many types of stationary batteries are actually blocks of two or more cells that are internally connected. This requirement would necessitate either some sort of feasibility exception process (which, as shown by the TFE process with the CIP standards can be very difficult, cumbersome, and time-consuming to develop and administer) or replacement of the batteries in question, which would pose enormous burdens on small entities that must comply with this standard. The language in this requirement should be changed from “cell-to-cell” to “unit-to-unit” in order to avoid these issues.
Yes
Yes
Yes
Yes
Yes
Y-WEA concurs with Central Lincoln regarding the timing of required battery tests. The IEEE standards referenced indicate target maintenance intervals. In order to remain reasonable, then, this compliance standard needs to allow some buffer between a targeted maintenance and inspection interval and a maximum enforceable maintenance and inspection interval. Central Lincoln’s suggestion of a four-month maximum window is reasonable and should be incorporated into the standard. Y-WEA is also concerned with R1.1’s language indicating that all components must be identified with no defined “floor” for the significance of a component to the Protection System. The SDT cannot possibly expect that a parts list containing every terminal block, wire and jumper, screw, and lug is going to be maintained with every single part having all the compliance data assigned to it, but without clearly stating this, that is exactly the degree of record-keeping that some overzealous auditor could attempt to hold the registered entity to. The FAQ is much clearer as to what is and is not a component and should be considered for the standard. Y-WEA also concurs with FMPA’s comments regarding the testing of batteries and DC control circuits associated with UFLS relaying. Many UFLS relays are installed on distribution equipment. Furthermore, many distribution equipment vendors are including UFLS functions in their distribution equipment. For example, many recloser controls incorporate a UFLS function in them. These controls and the reclosers they are attached to, however, are strictly distribution equipment. 16 USC 824o (a)(1) limits the definition of the Bulk-Power System to “not include facilities used in the local distribution of electric energy.” A distribution recloser and its control clearly fall into this exclusion. 16 USC 824o (i)(1) prohibits the ERO from developing standards that cover more than the Bulk-Power System. As such, the DC control circuitry and batteries associated with many UFLS relaying installations are precluded from regulation under NERC’s reliability standards and may not be included in this standard because they are distribution equipment and therefore not part of the Bulk-Power System. The proposed standard needs to be rewritten to allow for this exclusion and to allow for the testing of only the UFLS function of any distribution class controls or relays.
Individual
Armin Klusman
CenterPoint Energy

CenterPoint Energy believes the proposed Standard is overly prescriptive and too complex to be practically implemented. An entity making a good faith effort to comply will have to navigate through the complexities and nuances, as illustrated by the extensive set of documents the SDT has provided in an attempt to explain all the requirements and nuances. The need for an extensive “Supplementary Reference Document” and an extensive “Frequently Asked Questions Document”, in addition to 13 pages of tables and an attachment in the standard itself, illustrate that the proposal is too prescriptive and complex for most entities to practically implement. CenterPoint Energy is opposed to approving a standard that imposes unnecessary burden and reliability risk by imposing an overly prescriptive approach that in many cases would “fix” non-existent problems. To clarify this point, CenterPoint Energy is not asserting that maintenance problems do not exist. However, requiring all entities to modify their practices to conform to the inflexible approach embodied in this proposal, regardless of how existing practices are working, is not an appropriate solution. Among other things, requiring entities to modify practices that are working well to conform to the rigid requirements proposed herein carries the downside risk that the revised practices, made solely to comply with the rigid requirements, degrade reliability.

Individual

Kasia Mihalchuk

Manitoba Hydro

No

The monitoring attributes required to achieve level 2 monitoring of Station DC supply seem excessive. We are not aware of any other utilities doing automatic monitoring all 6 attributes required. In particular automatic monitoring of electrolyte level & battery terminal resistance does not seem practical. There is inconsistency between Table 1 and the FAQ. In the Group by Monitoring Level section of the FAQ it indicates that a battery with low voltage alarm would be considered to have level 2 monitoring. In Table 1C under the heading "Maximum Maintenance Interval" some of the entries are stated as being "Continuous". In the case of other maintenance activities the descriptor for Maintenance Interval indentifies the maximum period of time that may elapse before action must be taken. "Continuous" implies continuous action, however, in reality continuous monitoring enables no maintenance action to be taken until such time as trends indicate the need to do so. Therefore we recommend that where the maintenance interval be changed to read "Not Applicable".

No

Time horizons to change from present 6 months to 3 months maintenance time intervals within proposed implementation time period is not realistic.

Yes

No issues or concerns at present

Yes

There is no rational provided for the % associated with each VSL, or component rationale used to determine the proposed values listed.

Yes

Yes

Once the new Standard is approved, NERC must allow for a greater implementation stage and no further changes proposed for the foreseeable future. It does take a lot of resources for a Utility to make the required changes in maintenance frequency templates or type of maintenance required as per the proposed "Standard". Regarding the use of the term “Calendar” (i.e. end of calendar year) for maximum maintenance interval. Our utility uses end of fiscal year as our cutoff date for completing maintenance tasks for a given year. It would be considerable work for us to have to switch to end of calendar year with zero improvement in our overall reliability. We suggest it be left up to each utility to define their calendar yearly maintenance cycle when all tasks for that year must be completed.

Individual

Edward Davis

Entergy Services

No

1. Table 1a has a “Control and trip circuits with electromechanical trip or auxiliary contacts

(except for microprocessor relays, UFLS or UVLS)" component type listed, and there is a "Control and trip circuits with electromechanical trip or auxiliary [editorial comment: add 'contacts'] (UFLS/UVLS systems only)" component type listed. Suggest a "Control and trip circuits with electromechanical trip or auxiliary contacts" for a microprocessor relay application should be addressed since it seems to be missing. 2. The term "check" has replaced "verify" for some of the maintenance activities in this draft version. What is the difference between these two terms, and shouldn't "check" be defined if it is to be included as a PSMP activity term? 3. Assuming the term "check" replaced "verify proper functioning" in order to allow for the completion of a maintenance activity within the required interval and yet account for a maintenance correctable issue being present, suggest the other remaining activities in the tables where the term "verify proper functioning" is used, also be replaced with "check". 4. Consider modifying the definition of "verification" to "A means of determining or checking that the component is functioning properly or maintenance correctable issues are identified", eliminate use of the term "verify proper functioning" (which seems to be redundant by PRC-005-2 standard definition), and simply use the term "verify".

Yes

Yes

No

1. R4: A "Failure to specify whether a component is being addressed by time-based, condition-based, or performance-based maintenance" by itself is a documentation issue and not an equipment maintenance issue. Suggest this warrants only a lower VSL, especially when one of the required components can only be time based. 2. R4: Suggest a stepped VSL for "Entity has failed to initiate resolution of maintenance-correctable issues". While we understand the importance of addressing a correctable issue, it seems like there should be some allowance for an isolated unintentional failure to address a correctable issue. If possible, consider the potential impact to the system. For example, a failure to address a pilot scheme correctable issue for an entity that only employs pilot schemes for system stability applications should not necessarily have the same VSL consequence as an entity which employs pilot schemes everywhere on their system as a standard practice.

Yes

Yes

We support this project and believe it is a positive step towards BES reliability. However, we believe the draft document needs additional work as per our comments. Also, as indicated by the amount of industry input on the last version draft comments, we believe revisions are still needed to properly address this technically complex standard. If this standard is to deviate from the original project schedule and follow a fast track timeline for approval, then we disagree with the 3 month implementation for Requirement 1 and ask for at least 12 months. The original schedule provided sufficient advance notice to work on an implementation plan and it included the typical time required for NERC Board of Trustees and regulatory approvals. If the project schedule and typical NERC Board of Trustees and regulatory approval times are to be accelerated, the implementation plan should be extended.

Individual

James Sharpe

South Carolina Electric and Gas

Yes

Please provide clarity on why Table 1b for "Station dc supply" has a double entry that appears to be contradictory. The table provides monitoring attributes for a maximum maintenance interval of 6 calendar years and the next row says to refer to level 1 maintenance activities.

Yes

Yes

(Note that Section C.M2 leaves off "Distribution Provider" but references Requirement R2 at the end of the Section. "R2 applies to the Distribution Provider.")

Yes

Yes

No

Question/Answer 4-C (Pg. 10 of FAQ) seems to indicate that by documenting breaker operations

for fault conditions the table 1b requirements for control circuitry (Trip Coils and Auxiliary relays) can be satisfied. It is possible that even though a breaker successfully operates for a fault condition one trip coil of a primary/backup design can be inoperable and “masked” by the good trip coil. Although it is likely that a faulty trip coil would be caught by monitoring of continuity it is not a certainty that both trip coils actually operated to clear a fault (example-mechanical binding)

R1.1 states “Identify all Protection System Components”. To avoid confusion this should be clarified. It could be interpreted that discreet components must be individually identified. An example would be as individual aux relays used in the tripping path.

Individual

Jon Kapitz

Xcel Energy

The current language is not aligned with the FAQ concerning the level of maintenance required for Dc Systems, in particular the FAQ states that with only 1 element of the Table 1b attributes in place the DC Supply can be maintained using the Table 1b activities, the table itself is clear that ALL of the elements must be present to classify the DC Supply as applicable to Table 1b. The FAQ needs to be aligned with the tables. The FAQ also contains a duplicate decision tree chart for DC Supply. The FAQ contains a note on the Decision tree that reads, "Note: Physical inspection of the battery is required regardless of level of monitoring used", this statement should be placed on the table itself, and should include the word quarterly to define the inspection period.

No comments

No comments

No comments

No

As we commented on in the previous draft of the standard that proposed the Supplementary Reference and FAQ, we are concerned as to what role these documents will play in compliance/auditing. It is also unclear how these documents will be controlled (i.e. Revised and Approved, if at all). Inconsistencies have been identified between proposed standard and the documents (e.g. page 29 of FAQ example 1).

No

As we commented on in the previous draft of the standard that proposed the Supplementary Reference and FAQ, we are concerned as to what role these documents will play in compliance/auditing. It is also unclear how these documents will be controlled (i.e. Revised and approved, if at all). Inconsistencies have been identified between proposed standard and the documents (e.g. page 29 of FAQ example 1).

R1.1 “Identify all Protection System Components” – does this mean that the PSMP must contain a “list”? Please explain what this means. If it is a list, then essentially it will be a dynamic database, not necessarily a “program” as defined in the PSMP R1.3 “include all maintenance activities…” seems to be an indirect way of indicating that the entities PSMP must comply with the tables. Tables – the components related to DC Supply and battery are confusing. It the battery is the specific component then state “battery". If the charger is the specific component, then state “charger”. As currently written, one must sort through all of the different “Station DC Supply” line items to figure out what is required. – In tables 1b and above, it is written “no level 2 monitoring attributes are defined – use level 1 maintenance activities” but then maintenance activities are listed that don’t match with Level 1 maintenance activities. Please clarify what exactly needs to be done if using Table 1 b and above.

Individual

Rex Roehl

Indeck Energy Services

No

No

The VRF's are highly arbitrary because they treat all registered entities and all protective systems alike. They're not. For example, under-frequency relays for generators protect the equipment needed to restore the system after a blackout. The under-frequency load relays prevent a cascading outage. As discussed at the FERC Technical Conference on Standards Development, the goal of the standards program is to avoid or prevent cascading outages--specifically not loss of load. That would make under-frequency load relays more important to prevent cascading outages.

No

Measure 1 is complete overkill for a small generating facility. The maintenance program is to inspect and test the equipment within the intervals. A qualified contractor applies industry standard methods to maintain the equipment. Trying to have each entity define the maintenance

program down to the component level does not improve reliability.

No

The VSL's treat all entities, components and problems alike. By combining 4 protection maintenance standards, it elevates the VSL on otherwise minor problems to the highest levels of any of the predecessor standards. The threshold percentages are very arbitrary. Severe VSL doesn't in any way relate to reliability. For a small generator to miss or mis-categorize 1 out of 7 relays is unlikely to have any impact on reliability, much less deserving a severe VSL. The R2 & R4 VSL's don't care about results of the program, only whether all components are covered. Half of the components could fail annually and its not a Severe VSL. The R3 VSL allows 4% countable events, which can be hundreds for a large entity and only allows a few for a small entity.

No

In 2.3, the applicability is stated to have been modified. As discussed at the FERC Technical Conference on Standards Development, the goal of the standards program is to avoid or prevent cascading outages--specifically not loss of load. The modified applicablity moves away from the purpose of the standards program to an undefined fuzzy concept. Applicable Relays ignore the fact that some relays, or even some entities, have little to no affect on reliability. The global definition of Protective System encompasses all equipment, and doesn't differentiate the components that meet the purpose of the standards program. The Supplementary Reference doesn't overcome the inherent shortcomings of the standard.

No

The standard should include an assessment of, and criteria for, determining whether a Protective System is important to reliability. It presently treats a fault current relay on a 345 kV or higher voltage transformer the same as one on a small generator on the 115 kV system. The impact of failures on both on a hot summer day like we've had recently in NY, would be very different. As discussed at the FERC Technical Conference on Standards Development, the goal of the standards program is to avoid or prevent cascading outages--specifically not loss of load. This seems to have been lost in the drafting process. Much of the effort expended on complying with the existing PRC maintenance standards, as well as that to be expended on PRC-005-2, has little to no significant in terms of improving reliability. That effort could be better utilized if focussed on activities that could significantly improve reliability. As one of the Commissioners at the FERC Technical Conference on Standards Development characterized the relationship between FERC and NERC as a wheel off the track. The whole standards program, and especially PRC-005-2, is off the track.

Individual

Jeff Nelson

Springfield Utility Board

No

SUB appreciates the effort to try to strike a balance between specificity around a specific standard and flexibility to meet the requirement under the standard. The maximum allowable intervals don't seem unreasonable combined with the implementation schedule. However, it seems that the proposed changes stray toward a proscriptive set of maintenance that 1) does not allow for an alternate method of testing and 2)sets unrealistic testing requirements. For example, battery terminal to terminal testing is not feasible with all battery systems. This is a consistent message SUB has heard from others as well. First and foremost - a test or maintenance must be done for each device within the defined interval. With that in mind... SUB's preference would be that the maintenance activities focus on what specifically must be done for a device (may be type specific) vs. what could be done for a device for compliance (as an example of what an auditor could look for when conducting an audit) vs. alternative best-practices for testing and maintenance that the entity demonstrates constitutes as maintenance or test. With regard to the first (maintenance activities focus on what specifically must be done for a device) - it seems that this would apply to a limited number of devices With regard to the second (maintenance activities focus on what specifically can be done for a device) - it seems that this would apply broad number of devices and the list of what can be done should be broad to cover a range of different devices that provide the same function. With regard to the last (alternative best-practices for testing and maintenance that the entity demonstrates constitutes as maintenance or test), it would be helpful to have a mechanism outside the standard itself to either have a NERC technical group craft a series of criteria that must be met for an acceptable alternative maintenance or the entity document the criteria used to determine an adequate test and provide for a test that meets that set of criteria). It would be anticipated that these would fall under a minority of devices.

No

Time horizons for implementation seem adequate and SUB appreciates the attention to putting together a reasonable but assertive implementation plan. The Violation Risk Factors are problematic. With all due respect, it seems that NERC still operates in a "BIG UTILITY" mind set. There are "PROTECTION SYSTEMS" and there are "Protection Systems" - some Protection

Systems are may significantly impact system reliability and others may not. This not promote reliability in that if an entity was thinking about installing a minor system or installing an improvement that enhances reliability (but is not required) that it might back away because of the risk associated with somehow being out of compliance. Reliability runds the risk of being diminished through the standards approach. SUB suggests stepping back and putting more granularity on VRFs and there needs to be more perspective on the purpose of the device when arriving at a risk factor. Perhaps a voltage threshold could be attached to the VRFs. For example language could be added to say "For Elements at 200kV and above, or for Critical Assets, the risk factor is higher" and "For Elements operating at 100kV and above, the risk factor is medium" and "For Elements below 100kV, the risk factor is lower" In SUB's view, a discussion on VRF's needs to coupled with Violation Severity Levels. SUB discusses VRF's later in this comment form. SUB would be supportive of a Medium VRF designation if there were a more balanced VLF structure (please refer to the comments of VLFs)

No

The measures do not seem unreasonable. However the data retention states that documentation must exist for the two most recent performances of each maintenance activity. Stepping back, there is an implementation schedule that is designed to bring all devices into compliance with ONE maintenance or test within (SUB's understanding is) 6 years. There may not be documentation for more than one activity. Further, new or replacement components won't have more than one activity for a number of years. The data retention schedule, left unchanged, will promote non-compliance because it is impossible to have two records when only one may possibly exist. Rather than promote a culture of compliance, the standard promotes a culture of non-compliance by creating an standard that cannot be met. The FAQ addresses this issue, but the Data Retention language seems to be less clear. SUB suggests that the Data Retention language be clear that new components that do not replace existing components may have only one record for maintenance if only one maintenance of the component could possibly exist. SUB suggests that the Data Retention language also be clear that for new components that replace existing components, that the Data Retention requirement reflect that the entity needs to retain the last test for the pre-existing component and the test for the new component (for a total of two tests).

No

The Violation Risk Factors are problematic. With all due respect, it seems that NERC still operates in a "BIG UTILITY" mind set. Big utilities have potentially hundreds or thousands of components under different device types. Looking at the VRFs, the percentages 5% or 15% as an example, are looked at based on a deep pool of multiple devices so a "BIG UTILITY" that misses a component or small number of components may not trigger a high severity level. However a small utility may have only a handful of components under each type. Therefore if the small utility were to miss one component all of a sudden the utility automatically triggers the 5% or 15% threshold. This type of dynamic unreasonable and not equitable. Therefore (in an attempt to work within the framework proposed), SUB proposes that there be a minimum number of components that might not be in compliance which result in a much lower Violation Severity Level. SUB suggests that NERC try to create a level playing field. If 15% of a Big Utility's total number of components averages at around 15 out of 100 total then perhaps a reasonable outcome would be that up to 5 components (regardless of the total number of components an entity has under each type) could be in violation without tripping into a high VSL. (the 5 components threshold may not apply to all types, this is just for illustrative purposes). Also, are the missed components compounding? For example, if an entity missed 5 components on year three and another 5 components in year 10 is the VSL based on 10 components or 5 components. There should be a time horizon attached to the VSL such that the VSL does not count prior components that were brought into compliance through a past action. That intent may be to not have the VSLs be based on compounding numbers of components, however that should be made clear.

Yes

SUB appreciates that Time Based, Performance Based, and Condition Based programs can be combined into one program. However it should be clear that a utility may include one, two or all three of these types of programs for each individual device type. Currently the language reads: "TBM, PBM, and CBM can be combined for individual components, or within a complete Protection System." The "and" requires all three to be combined if they are combined. SUB suggests the and be changed to "or". Language Change: "TBM, PBM, or CBM can be combined for individual components, or within a complete Protection System."

Yes

SUB is supportive of the intent behind the standard and appreciates the ability to provide input into this process. The following is a repeat of the comment in Question #5 with regard to the supplemental reference. SUB appreciates that Time Based, Performance Based, and Condition Based programs can be combined into one program. However it should be clear that a utility may include one, two or all three of these types of programs for each individual device type.

Currently the language reads: "TBM, PBM, and CBM can be combined for individual components, or within a complete Protection System." The "and" requires all three to be combined if they are combined. SUB suggests the and be changed to "or". Language Change: "TBM, PBM, or CBM can be combined for individual components, or within a complete Protection System."

Group

Bonneville Power Administration

Denise Koehn

BPA, Transmission Reliability Program

No

The requirements pertaining to dc control circuitry are confusing. To start with, a definition or further explanation is required for the term “auxiliary contact”. Is this strictly a breaker “a” or “b” switch, or does this include lockout relay contacts, etc.? Another confusing point is that the term trip circuit is used in several places throughout the tables, but it is not included in the definition of Protection System, where the term dc control circuitry is used. It is important to use consistent terminology throughout the definition and the standard. The requirements for (dc) control circuits in Table 1a are fairly straightforward, but in Table 1b control circuits are broken down into three parts: trip coils and auxiliary relays; trip circuits; and control and trip circuitry. It is very unclear exactly what each of these three parts includes. In Table 1c, control circuitry is covered as a single element. Please provide clarity to what is included in each part of a control circuit in Table 1b and the monitoring attributes of each. Also, please be consistent in the treatment of control circuits throughout the three tables. Table 1a, SPS, BPA does not understand the following segment of this paragraph “The output action may be breaker tripping, or other control action that must be verified, but may be verified in overlapping segments. A grouped output control action need be verified only once within the specified time interval,..." In one sentence, it says you can test a SPS in segments - and in the next sentence it says you have to verify the grouped output control action at least once within the specified time interval. It seems that the sentences contradict themselves. Table 1b, Control and trip circuitry - "Monitoring of the continuity of breaker trip circuits along with the presence of tripping voltage supply all the way from relay terminals (or from inside the relay) through to the trip coil(s)..." To monitor the trip path as proposed in this Standard would cost some serious time and $$. BPA does not believe there is a way to meet level two monitoring for batteries. In addition, some of the maintenance tasks need to be defined: - monitoring the electrolyte level is not commercially available. - the state of charge of each individual cell may need to be better defined. There are means to verify the state of charge of the entire bank, but not each individual cell. Since a device to provide level 2 monitoring is not commercially available, we would be forced to follow level 1 maintenance guides, which would require maintenance of comm batteries every three months. Many of these batteries are not accessible during 9 months of the year except via sno-cat or helicopter. We currently monitor for some of the level 2 requirements, but not all. Our current practices of monitoring and yearly maintenance supplemented by opportunity inspections have successfully identified problems before we lost DC power to any of our comm facilities. VRLA type batteries: - battery continuity needs to be defined. In regards to the maximum allowable intervals; the frequency with which BPA performs the 18 month maintenance tasks as prescribed in the standard are on a 24 month interval along with visual inspections and voltage measurements weekly to bi-weekly. BPA has seen success with this maintenance program with the ability to identify suspect cells or entire banks with adequate time to perform corrective actions such as repairs or replacements. BPA also does not perform routine capacity testing, this is an as required maintenance task to confirm/validate our other test results if needed. Our suggestion would be to extend the maintenance intervals beyond 18 months, and to provide some clarity on the above items.

Yes

Yes

Yes

The term “maintenance correctable issue” used in Requirement 4 seems to be at odds with the definition given for it. It seems that an issue that cannot be resolved by repair or calibration during the maintenance activity would be a maintenance non-correctable issue. Also, in Requirement 4, the term “identification of the resolution” is ambiguous. Suggested changes for Requirements 4 and 4.1 are: R4. Each Transmission Owner, Generator Owner, and Distribution Provider shall implement its PSMP, and resolve any performance problems as follows: 4.3 Ensure either that the components are within acceptable parameters at the conclusion of the maintenance activities or initiate actions to replace the component or restore its performance to within acceptable parameters.

Individual

Amir Hammad

Constellation Power Generation

No

Constellation Power Generation (CPG) does not agree with the maximum maintenance interval for associated communication systems and station dc supply that has as a component any type of battery, which is 3 months. If the intent of the drafting team was to make this test quarterly (as recommended in IEEE-450), than the maximum interval should be 4 months. As written, for a registered entity to ensure they complete this test in an interval less than 3 months, they will most likely complete this test every 2 months. This causes two additional and unwarranted tests every year. CPG recommends an alternate formulation for intervals if the nominal interval is less than one year. Some possible alternatives (assuming a three month nominal interval): Once per calendar quarter no later than the end of the quarter no earlier than one month before it. Four times per year, no more than 120 days apart no less than 60. CPG does not agree with differentiating between the different battery types. A suggestion would be to take the maximum maintenance interval for all the battery types, which is 6 years, and apply them across all types of batteries, eliminating the need to differentiate between them. Furthermore, multiple cell units do not provide the ability to measure cell-cell resistance, and so that requirement should be removed. CPG is not clear why electromechanical tip contacts in microprocessor relays are excluded in Table 1a.

No

Constellation Power Generation questions why the VRF for R1 is High while all other requirements are Medium. This VRF should be changed to Medium to follow suit with the other requirements.

No

Constellation Power Generation does not agree with the proposed data retention section. Retaining and providing evidence of the two most recent performances of each distinct maintenance activity should be sufficient. For entities that have not been audited since June of 2007, having to retain evidence from that date to the date of an audit could contain numerous cycles, which is cumbersome and does not improve the reliability of the BES.

No

Constellation Power Generation does not agree with the proposed data retention section. Retaining and providing evidence of the two most recent performances of each distinct maintenance activity should be sufficient. For entities that have not been audited since June of 2007, having to retain evidence from that date to the date of an audit could contain numerous cycles, which is cumbersome and does not improve the reliability of the BES.

Yes

No

The PT/CT testing section is implying that the testing must be completed while energized, which is counter to industry practice at generation facilities. Leeway should be given to the entities to devise their own methods for testing voltage and current sensing devices and wiring to the protection system.

Constellation Power Generation does not agree with the changes to Voltage and Current Sensing inputs to protective relays in Table 1a. It is inferring that the only way to complete testing on these components to satisfy NERC is to complete online testing, which is dangerous and does not improve the reliability of the BES. In fact, it can be argued that it decreases the reliability of the BES. The verbiage should be changed back to what was originally proposed to allow for offline testing. Furthermore, Constellation Power Generation does not agree with several of the inclusions of generator Facilities in this standard. For example, in 4.2.5.1, the proposed standard looks to include any components that can trip the generator. At a nuclear facility, this could include protection of motors at the 4 kV level that may trip the generator due to NRC regulated safety issues. This should not fall under NERC jurisdiction. The inclusion of station service transformers is another inclusion that should not be in this standard. There is no difference between a station service transformer and a transformer serving load on the distribution system. This has no impact on the BES, which is defined as the system greater than 100 kV. Additionally, CPG has concerns regarding the vague language of R1.1, which requires the identification of all protection systems components. It provides no elaboration on the level of granularity expected or acceptable means of identification. It is unlikely that the SDT expected the unique identification of every discrete component down to individual test switches or dc fuses. In the case of current transformers, several of which, or even dozens of which may be connected to a single relay there is no apparent reliability benefit that comes from identifying them uniquely so long as it is proven that a protection system is receiving accurate current signals from the aggregate connection. (It may be argued that the revised definition of “protection stems” eliminates the need to include CT’s under R1.1 but that’s just one interpretation.) Some discrete components of communication systems may exist in an environment that is not owned by or known to the protection system owner. Additionally all protection system components may be identified in

documents that are current and maintained but not in the form of a specific search-able list that is limited to components that are within the scope of PRC-005. Examples may be indexed engineering drawings that identify relays and other components for each protection systems or scanned relay setting and calibration documents that are current but not attached to search-able meta data. It is unclear whether or not these would be considered acceptable identification meeting R1.1. If they are not then the implementation plan for R1 is in all probability unachievable. CPG requests that the SDT provide more elaboration on R1.1 in the standard and in the supporting documents. In that vein, to clarify footnote 1 to R1 which excludes devices that sense non-electrical signals, it should explicitly say that the auxiliary relays, lockout relays and other control circuitry components associated with such devices are included. The matter is well-addressed in the FAQ's but could easily be misunderstood if not included here. Lastly, Constellation Power Generation would like to voice concern over the expedited process in which this standard is being developed. Voting within a week of submitting comments does not leave enough time for the drafting team to thoroughly vet through the issues and identify much needed changes, let alone implement them.

Group

WECC

Tom Schneider

Western Electricity Coordinating Council

Yes

Compliance agrees with the changes as they add clarity though the Tables do not define what is actually required to demonstrate compliance without reading the Supplementary Reference and the FAQs.

Compliance agrees with the measures. Compliance recommends making the Supplementary Reference part of the standard and that it be referenced appropriately in Table 1a, 1b, 1c and Attachment A. Compliance does not agree with the Data Retention as provided in the draft. In order for an entity to demonstrate that they have maintained system protection elements within their defined intervals retention of documentation will be required for many years. This is in order to establish bookends for the maintenance interval. Maintenance intervals commonly span 5 years or more. Entities should be required to retain data for the entire period of the maintenance interval. Data Retention should be changed to: The Transmission Owner and any Distribution Provider that owns a transmission Protection System and each Generation Owner that owns a generation Protection System, shall retain evidence of the implementation of its Protection System maintenance and testing program for a minimum of the duration of one maintenance interval as defined in the maintenance and testing program.

No

Compliance does not agree. The R1 VSL allows too much to interpret. What does no more than 5% of the component actually use to define the percentage; it should be specific if it is referring to the weight of each component and how many components are there. For example, Protective Relay is one component of five. In addition the VSL for Lower, Moderate and High states in the first paragraph that the entity included all of the "Types" of components according to the definition, though failed to "Identify the Component". It needs clarity on how it can be included though not specifically identified like the next two bullets. The same concern applies to R2 and R4. Be specific about what is included (or not) to calculate those percentages.

Yes

Compliance does agree with the clarity and the Supplementary Reference should be specially referenced where appropriate the Tables 1a, 1b, 1c and Attachment A that are included with the Standard. But this reference is not a part of the approved standard and there are no controls which prevent changes in the reference document that could impact the scope or intent of the standard. If the standard is approved with reference to the Supplementary Reference then future changes to the Supplementary Reference should not be allowed without due process. Only the version in existence at the time of approval of the standard could be used to clarify or explain the standard.

Yes

Compliance does agree with the clarity. The FAQ answers should be referenced specifically to the Standard and the Supplementary Reference to further understand those two documents. However, endorsement of the Standard should not imply endorsement of the FAQ and vice versa.

Compliance believes it will be difficult to demonstrate compliance when an entity chooses Condition Based Level 2 or Level 3 maintenance as the details of the requirements are still open to interpretation. The FAQ has answers to specific questions that are multiple choices. Breaking down this standard into this level of granularity requires supplementary documents to understand it and for auditors to understand how to determine compliance. Industry standards are specific to equipment types and should be allowed to set intervals and maintenance tasks rather than a one-size fitting all approach.

Group
Western Area Power Administration
Brandy A. Dunn
Western Area Power Administration - Corp Services Office
No
1) Standard, Table 1a, “Control and trip circuits with electromechanical trip or aux contacts (except for microprocessor relays, UFLS or UVLS)”: Where would un-monitored control and trip circuits connected to a microprocessor relay fall, and what is the associated interval and maintenance activity? 2) Standard, Table 1a, “Control and trip circuits with electromechanical trip or aux contacts (except for microprocessor relays, UFLS or UVLS)”: Please confirm that the defined Maintenance Activity requires actual tripping of circuit breakers or interrupting devices. 3) Standard, Table 1a, “Control and trip circuits with unmonitored solid state trip or auxiliary contacts (except UFLS or UVLS)”: Please confirm that the defined Maintenance Activity requires actual tripping of circuit breakers or interrupting devices. 4) Standard, Table 1b. On page 13, for Protective Relays, please clarify the intent of “Conversion of samples to numeric values for measurement calculations by microprocessor electronics that are also performing self diagnosis and alarming.” 5) Standard, Table 1b. On page 13, for Protective Relays, please clarify the intent of “Verify correct operation of output actions that used for tripping.” Does this require functional testing of a microprocessor relay, i.e., using a relay test set to simulate a fault condition? 6) Standard, Tables 1a and 1b: Would it be possible to provide an interval credit for full parallel redundancy from relay to trip coil? 7) Table 1a (page 9) Voltage and Current Sensing Inputs to Protective Relays and associated circuitry – This maintenance activity statement implies that signal tests to prove the voltage and current are present is all that is required. Can this be accomplished by adding a step to the Relay Maintenance Job Plan to take a snapshot of the currents and potentials (In-Service Read) with piece of test equipment? 8) Table 1b (Page 14) Control and Trip Circuitry – Level 2 Monitoring Attributes for Component is too wordy and hard to understand the meaning. Does this whole paragraph mean that the dc circuits need to be monitored and alarmed? At what level does the dc control circuits need the alarming? Can this be at the control panel dc breaker output? 9) Table 1b (Page 15) Station Dc Supply – Should this be in Table 1c because the attributes indicate that the station dc supply cells and electrolyte levels are monitored remotely. To do a fully monitored battery system would be cost prohibitive and require a tremendous amount of engineering. 10) Table 1a and 1b (Page 11 and 16) Associated communications system - Western has monitoring capability on all Microwave Radio and Fiber Optics communications systems with the Communications Alarm System that monitors and annunciates trouble with all communications equipment in the communications network. The protective relays that use a communications channel on these systems have alarm capability to the remote terminal units in the substation. Since these are digital channels how does an entity prove channel performance on a digital system?
Yes
Yes
Yes
Yes
Yes
Clarification 1) FAQ, page 36, Control Circuit Monitor Level Decision Tree: It’s not clear if the note on Level 1 device operation is required for Level 3 monitoring.
1) Standard, Page 4, R 4.3: Is the utility free to define its own “acceptable limits”? 2) Standard, Page 4, R 4.3: Must the “acceptable limits” be stated in the PSMP? 3) Standard, Page 4, Footnotes 2 and 3 are the same. 4) Attachment A says we can go to a performance based program; does this apply to every part of the standard? In other words, does this apply to component testing, functional testing, etc., and do we define the intervals of the test. That is, do we determine how long we test the sample of at least 30 units that Attachment A discusses?
Group
Public Service Enterprise Group ("PSEG Companies")
Kenneth D. Brown
Public Service Electric and Gas Company
No
The SDT is to be commended for the work and details included in the most recent draft revision. The standard – with associated references is easier to interpret. The sections on DC supply are too restrictive. Quartile checks of VLA electrolyte levels for unmonitored systems is reasonable, however the option of checking the electrolyte levels and voltages with less frequency is not an

option with systems that have voltage alarm notification and ground detection monitoring alarm notification unless all level 2 attributes are followed. The level 2 monitoring attributes are too comprehensive to allow for a suggested alternative less restrictive interval of 6 months to a year. Suggest there be an additional option for level 2 monitoring that includes voltage level and ground alarms with a 6 month maintenance activity interval. The perception of table 1a page 12 for station DC supply – "used for UVLS and UFLS" is a maintenance activity to verify proper DC supply voltage when the UVLS and UFLS system is maintained. This is the only DC supply maintenance activity for those applications and the other more rigorous maintenance activities do not apply? If this is a correct interpretation specifically list that as such in the maintenance activity description (State the other DC supply maintenance activities are not applicable for UVLS and UFLS). The maintenance intervals for station DC supply for level 1 and 2 monitoring does not appear to be consistent and is somewhat confusing. A battery system with level 2 monitoring attributes for components has intervals of 6 years, and then in next section states that no level 2 attributes are defined - use level 1 maintenance activities. Suggest that all DC supply / batteries be broken out all be included in one separate -stand alone table with varied maintenance requirements based on monitoring attributes. The maintenance activities shown on table 1b on page 19 for Station DC supply is intended for VLA batteries? If so add that in component definition. For DC systems that use a storage battery, suggest that chargers be eliminated as other required maintenance activities will expose any problems with the charger. The requirements of performing a capacity test every 6 years during the initial service life of a VLA battery in addition to the other maintenance activities are too restrictive and will cause extensive outages of the affected equipment. Suggest that this frequency be extended to 10 years for VLA batteries for the first iteration if all the other maintenance activities are followed. Failure rate of VLA in first 10 years is extremely low. Other maintenance activities will expose significant issues.

Yes

No

Data retention for battery capacity test should be most recent performance, not last 2. The other maintenance activities documentation with one iteration of capacity test is sufficient documentation

Yes

No

Suggest that figure 2 has a line of demarcation added that shows components specifically not part of the standard requirements. (Medium voltage bus). Battery charger should be removed from table of components when a storage battery is used for the DC supply.

No

This is a very useful document and provides a good source of additional information; there are some cases where it could be interpreted as a standard requirement that can lead to confusion if conflicts exist. For example, the group by monitoring level example V.1.A shown on page 29 describes a level 2 partial monitoring as circuits alerting a 24Hr staffed operations center, page 38 shows level 2 monitoring as detected issues are reported daily. The actual standard table 1b level 2 monitor describes alarms are automatically provided daily to a location where action can be taken for alarmed failures within 1 day or less. This is listed as a supplemental reference document in the standard. The FAQ document "supports" the standard but is or is not an official interpretation tool, or if it is state as such.

Individual

Gerry Schmitt

BGE

No

Comment 1.1: In its decision to use "calendar years" with the maintenance intervals prescribed for most components the SDT has provided a framework that is consistent with a well-run PSMP but with enough flexibility to be practical. However BGE believes the application of this approach to short maintenance intervals, like three months for some battery maintenance will risk numerous violations due to practical scheduling constraints that are not a realistic threat to reliability. As the requirements are presently defined the inherent flexibility for battery maintenance that is nominally done on three month intervals may be as long as 1/3 of the interval or as short as one day (Our interpretation: Maintenance last done on January 1 is next due on April 1 and can be done no later than April 30. Maintenance done on Jan 31 is next due on April 30 and is overdue if done on May 1). The only practical solution is to increase the frequency so that the average intervals are significantly shorter than the nominal requirement. BGE recommends an alternate formulation for intervals if the nominal interval is less than one year. Some possible alternatives (assuming a three month nominal interval): Once per calendar quarter no later than the end of the quarter no earlier than one month before it. Four times per year, no more than 120 days apart no less than 60. Comment 1.2: On page 11, Row-3/Column-

1 of Table-1a includes the following entry for functional trip testing: "Control and trip circuits with electromechanical trip or auxiliary contacts (except for microprocessor relays, UFLS or UVLS)". It is not clear why electromechanical trip contacts in microprocessor relays are excluded. Comment 1.3: On page 12, Row-3/Column-3 of Table-1a includes the following Verification Task for Station DC Supplies: "Verify Battery cell-to-cell connection resistance". Multiple cell units do not provide the ability to measure cell-cell resistance.

No

See comments under 7 regarding the ambiguity of R1.1. A high VRF for some interpretations of R1.1 may not be reasonable. A program may be structured so that sufficient maintenance to ensure reliability is taking place even though a specific component is not identified. Contrasting the high VRF for R1 with the medium VRF for R4 seems backwards.

Yes

No

The VSL's as proposed may be reasonable but it is difficult to endorse them until the ambiguity in R1.1 is reduced.

Yes

No

The FAQ is a very helpful document. A few more changes would be beneficial. See comments regarding manufactures' advisories and R1.1 under section 7 below. It is our recommendation that manufacturers service advisories not be an implied part of the PMSP requirements and that the expectations for R1.1 be more explicitly described in the FAQ.

Comment 7.1 The standard, FAQs, and supplementary reference all make references to upkeep and include in "upkeep" changes associated with manufacturer's service advisories. The FAQs include statements that the entity should assure the relay continues to function after implementation of firmware changes. This statement is uncontestable as general principle but is problematic in its inclusion in an enforceable standard because there is no elaboration on what the standard expects, if anything, as demonstration of an entity's execution of this responsibility. PRC-005-2 appropriately focuses on implementation of time-based, condition based, or performance based PSMPs; but addressing service advisories does not fit well with any of these ongoing preventive maintenance activities. It is instead episodic, more like commissioning after upgrades, or corrective maintenance work generated by condition-based alarms or anomalies discovered by analyzing operations. The standard appropriately steers clear of imposing requirements for these latter responsibilities as long as execution of an ongoing maintenance program is being demonstrated. BGE recommends that implied inclusion of service advisories should be removed from the standard and supporting documents. Comment 7.2 R1.1 Requires the identification of all protection systems components. But it provides no elaboration on the level of granularity expected or acceptable means of identification. It is unlikely that the SDT expected the unique identification of every discrete component down to individual test switches or dc fuses. In the case of current transformers, several of which, or even dozens of which may be connected to a single relay there is no apparent reliability benefit that comes from indentifying them uniquely so long as it is proven that a protection system is receiving accurate current signals from the aggregate connection. (It may be argued that the revised definition of "protection systems" eliminates the need to include CT's under R1.1 but that's just one interpretation.) Some discrete components of communication systems may exist in an environment that is not owned by or known to the protection system owner. Additionally all protection system components may be indentified in documents that are current and maintained but not in the form of a specific searchable list that is limited to components that are within the scope of PRC-005. Examples may be indexed engineering drawings that indentify relays and other components for each protection systems or scanned relay setting and calibration documents that are current but not attached to searchable metadata. It is unclear whether or not these would be considered acceptable identification meeting R1.1. If they are not then the implementation plan for R1 is in all probability unachievable. BGE requests that the SDT provide more elaboration on R1.1 in the standard and in the supporting documents. Comment 7.3 For clarity footnote 1 to R1 which excludes devices that sense non-electrical signals should explicitly say that the auxiliary relays, lockout relays and other control circuitry components associated with such devices are included. The matter is well-addressed in the FAQ's but could easily be misunderstood if not included here.

Individual

Michael R. Lombardi

Northeast Utilities

No

In Table 1c it is required to report the detected maintenance correctable issues within 1 hour or less to a location where action can be taken to initiate resolution of that issue. Even for a fully monitored protection system component it can be difficult to report the action in 1 hour.

Recommend a 24 hour period for both Level 2 and Level 3 reporting of maintenance correctable issues. Additionally, please clarify meaning of “to a location where action can be taken”.

Yes

No

Two most recent performances of each distinct maintenance activity for the Protection System components will require data retention for an extended period of time. From the FAQ, it is understood that “the intent is not to have three test result providing two time intervals, but rather have two test results proving the last interval”. However two intervals still results in an extended period of time. For example, for a twelve year interval, data would need to be retained for ~24 years. During that period of time a number of on-site audits would have been completed - it is not clear why the requirement is the longer of the two most recent performances or to the previous on site audit date.

No

For R1 under Severe VSL – suggest moving the first criteria “The entity’s PSMP failed to address one or more of the type of components included in the definition of “Protection System” under High VSL since this criteria cannot have the same VSL level as “Entity has not established a PSMP”.

No

There is no guidance on how to calculate the total number of components and thus, the percentages under different severity levels. FAQ provides some insight into how an entity can count components however; an example in the reference document will provide clarity.

No

Page 2 under Component definition, term “somewhat arbitrary” is used by the drafting team to address what constitutes a dc control circuit. Though the drafting team has provided entities with flexibility to define as per their methodologies, it is recommended to clearly determine “what constitutes a dc control circuit” since it will be used to determine compliance.

R1.1 It is not clear what would constitute “all Protection System components”. Suggest the addition of a definition for “Protection System components”. R1.4 Suggest revise to read: “all batteries or dc sources” Table 1a vented lead acid -- “Verify that the station battery can perform as designed by evaluating …” -- Please define evaluating, including: • What is the basis for the evaluation? • Is 5% 10% 20% etc acceptable? • Where does baseline come from for older batteries? Request clarification of 2.3 Applicability of New Protection System Maintenance Standards from Supplementary Reference. Specifically, please clarify if a functional trip test is needed to be performed on the distribution circuit breakers to protect the Bulk Electric System (BES) if these low side breakers are not part of the transmission path. (A diagram identifying the applicable breakers would be helpful in the Supplementary Reference)

Individual

Jeff Kukla

Black Hills Power

No

-For Protective Relays, Table 1a Maintenance Activities has no requirement for verifying output contacts on non-microprocessor based relays. The actual contacts used for tripping should be verified by this activity. -For Protective Relays, Table 1b Maintenance Activities states “Verify correct operation of output actions that are used for tripping”. This requirement is vague and needs to define whether all protection logic or conditions that would initiate a relay trip output are required to be simulated and tested to the relay tripping output contact. -For Voltage and Current Sensing Inputs to Protective Relays and associated circuitry, Table 1a references “current and voltage signals” and Table 1b references “current and voltage circuit signals”. Need consistency or definitions to meet this requirement. -For Control and trip circuits with electromechanical trip or auxiliary (UFLS/UVLS Systems Only), Table 1a states “..except that verification does not require actual tripping of circuit breakers or interrupting devices.” This exception to the requirement seems to defeat the whole purpose of the standard and leaves a huge gap open to interpretation and conflict. -For Control and trip circuits with unmonitored solid-state trip or auxiliary contacts (UFLS/UVLS Systems Only), Table 1a states “..except that verification does not require actual tripping of circuit breakers or interrupting devices.” This exception to the requirement seems to defeat the whole purpose of the standard and leaves a huge gap open to interpretation and conflict. -For Station dc supply, Table 1a requirement includes “Inspect: The condition of non-battery-based dc supply.” This is redundant with the requirements of the section Station dc supply (battery is not used) and should be removed from this section. -For Voltage and Current Sensing Inputs to Protective Relays and associated circuitry, a maximum interval of verification of 12 years seems to contradict the intent of the rest of the Maintenance standard which dictates 6 years on all of the other components. The requirement for these components should fall in line with the rest of the standard.

No

-Why would R1 (PSMP Program Establishment) be a HIGH VRF and R4 (the actual implementation of the plan) be a medium VRF? These two requirements need to have the same implementation and severity.

Yes

No

-VSL's are based on percentages of components, where the definition of a 'component' is in many cases up to the entity to interpret (see PRC-005-2 FAQ sheet, Page 2). Basing VSL's on an entities interpretation (or count) of 'components' is not an equitable measure of severity level.

Yes

Yes

Individual

John Bee

Exelon

No

Exelon does not completely agree with the minimum maintenance activities and maximum allowable intervals as suggested by SDT. Comments on minimum maintenance activities: Reference Table 1a (Page 11) of Standard PRC-005-2: With regard to the maintenance activity: "Verify that the station battery can perform as designed by conducting a performance ……". The standard should clearly define what is meant by "perform as designed" to eliminate ambiguity in future interpretations. Also, Table 1a Station dc supply (that has as a component Vented Regulated Lead-Acid batteries) discusses “modified performance capacity test of the entire battery bank”. This needs additional clarification or should be reworded because modified test includes both the performance test (which is the capacity test) and the service test. Should be reworded to be “modified performance test”. Comments on maximum allowable intervals: Nuclear generating stations have refueling outage schedule windows of approximately 18 months or 24 months (based on reactor type). If for some reason the schedule window shifts by even a few days, an issue of potential non-compliance could occur for scheduled outage-required tasks. The possibility exists that a nuclear generator may be faced with a potential forced maintenance outage in order to maintain compliance with the proposed standard. For the requirements with a maximum allowable interval that vary from months to years (including 18 Months surveillance activities), the SDT should consider an allowance for NRC-licensed generating units to default to existing Operating License Technical Specification Surveillance Requirements if there is a maintenance interval that would force shutting down a unit prematurely or face non-compliance with a PRC-005 required interval. Therefore, Tables 1a, 1b & 1c should include an allowance for any equipment specifically controlled within each licensee’s plant specific Technical Specifications to implement existing Operating License requirements if such a conflict were to occur. Please see additional comments under Q7.

Yes

Yes

Yes

Yes

Yes

Nuclear generators are licensed to operate and regulated by the Nuclear Regulatory Commission (NRC). Each licensee operates in accordance with plant specific Technical Specifications (TS) issued by the NRC which are part of the stations’ Operating License. TS allow for a 25% grace period that may be applied to TS Surveillance Requirements. Referencing NRC issued NUREGs for Standard Issued Technical Specifications (NUREG-143 through NUREG-1434) Section 3.0, "Surveillance Requirement (SR) Applicability," SR 3.02 states the following: "The specified Frequency for each SR is met if the Surveillance is performed within 1.25 times the interval specified in the Frequency, as measured from the previous performance or as measured from the time a specified condition of the Frequency is met." The NRC Maintenance Rule (10 CFR 50.65) requires monitoring the effectiveness of maintenance to ensure reliable operation of equipment within the scope of the Rule. Adjustments are made to the PM (preventative maintenance) program based on equipment performance. The Maintenance Rule program should provide an acceptable level of reliability and availability for equipment within its scope. The NRC has

provided grace periods for certain maintenance and surveillance activities. Exelon strongly believes that SDT should consider providing this grace period to be in agreement and be consistent with the NRC methodology. Not providing this grace period will directly affect the existing nuclear station practices (i.e., how stations schedule and perform the maintenance activities) and may lead to confusion as implementing dual requirements is not the normal station process. Nuclear generating stations have refueling outage schedule windows of approximately 18 months or 24 months (based on reactor type). If for some reason the schedule window shifts by even a few days, an issue of potential non-compliance could occur for scheduled outage-required tasks. The possibility exists that a nuclear generator may be faced with a potential forced maintenance outage in order to maintain compliance with the proposed standard. For the requirements with a maximum allowable interval that vary from months to years (including 18 Months surveillance activities), the SDT should consider an allowance for NRC-licensed generating units to default to existing Operating License Technical Specification Surveillance Requirements if there is a maintenance interval that would force shutting down a unit prematurely or face non-compliance with a PRC-005 required interval. Therefore, at a minimum, maintenance intervals should include an allowance for any equipment specifically controlled within each licensee's plant specific Technical Specifications to implement existing Operating License requirements if such a conflict were to occur. PECO would like to have the implementation plan provide at least 1 year for full implementation of the new standard. This will provide adequate time for development of documentation, training for all personnel, and testing then implementation of the new process (es).

Individual

Andrew Z.Pusztai

American Transmission Company

No

ATC feels additional changes are needed. The functional testing requirement should be altered or removed as it increases the amount of hands-on involvement and the opportunity for human error related outages to occur, thereby introducing more opportunities to decrease system reliability. As noted on p. 8 in the supplementary reference document, "Experience has shown that keeping human hands away from equipment known to be working correctly enhances reliability." By removing circuits from service on the proposed timelines for functional testing, the chance for human error is greater than a mis-operation from faulty wiring. Alternatively, entities may choose to schedule more planned outages to conduct their functional testing in order to limit the risk of unplanned outages resulting from human error. Under this scenario, more elements will be scheduled out of service on a regular basis, thereby reducing transmission system availability and weakening the system making it more challenging to withstand each subsequent contingency (N-1). Thus testing an in-tact system is more desirable than taking it out of service for testing. While the SDT has included language in the draft standard to use fault analysis to complete maintenance obligations, in practicality, this option does not offer any relief to taking outages to perform functional tests. Nearly all BES circuit breakers are equipped with dual trip coils. Identifying which trip coil operated for a fault only covers the one trip coil. Functional tests would still be needed on the other. The likelihood of having multiple trips on a given line in the course of several years is very low. Given it can take a year to schedule some outages, planning maintenance with random faults is unpractical and will create unacceptable risk to compliance violations. A better approach is to use the basis in schedule A, but extend this to cover the entire protection schemes. The document should establish target goals for mis-operation rates (dependability and security). This would allow the utilities to develop cost effective programs to increase reliability. The utilities would have incentives to replace poorly performing communications systems; they would be able to quantify the value of upgrading relay systems.

No

ATC disagrees with the VRFs as specified in the standard. R1 VRF would more likely be classified as "medium" and R2 through R4 should be classified as a "High" VRF. ATC is O.K. with the Time Horizons specified.

No

The NERC standard assigns a retention period for the two most recent performances of maintenance activity which implies two intervals of documentation be maintained. ATC does not agree that requiring all data for two full cycles is warranted. The volume and length of data retention is unreasonable. ATC recommends that the entity retain the last test date with the associated data, plus the prior cycle test date only without retaining the test data. ATC agrees with assignment of the measures.

Yes

Yes

No

The FAQs are helpful, however, with the revised standard as written, ATC has issues with the answers provided. Please refer to Question #7 for areas of concern.
It is appreciated that the SDT is attempting to provide options for maintenance and testing programs. Practically speaking, it will be difficult to perform any type of program outside of Time-Based Maintenance (TBM). Too many circuits are a mix of technology. For example, a line may have microprocessor relays for detecting and tripping line faults, but the bus differential lockout could also trip the line breaker. One may be partially monitored and the other unmonitored. It will force the utility to perform maintenance at the shorter of the maintenance cycles. Additional time and cost will be required to organize and switch out the applicable equipment for the outage, approximately doubling the cost associated with performing these trip tests. When entities are required to maintain tens of thousands of these devices, the simplest approach will be to revert to TBM. ATC does not support the existing 2nd Draft of PRC-005-2 Standard because it is our opinion that: • There is a high probability that system reliability will be reduced with this revised standard. • The number of unplanned outages due to human error will increase considerably. • Availability of the BES will be reduced due to an increased need to schedule planned outages for test purposes (to avoid unplanned outages due to human error). • To implement this standard, an entity will need to hire additional skilled resources that are not readily available. (May require adjustments to the implementation timeline.) • The cost of implementing the revised standard will approximately double our existing cost to perform this work. ATC requests that relevant reliability performance data (based on actual data and/or lessons learned from past operating incidents, Criteria for Approving Reliability Standards per FERC Order 672) be provided to justify the additional cost and reliability risks associated with functional testing. Under a Performance-Based Program, what happens if the population of components drops below 60 (as all will eventually)? Is there an implementation period to default to TBM? Are the internal relays and timers associated with a circuit breaker included as part of the protection scheme? In the Independent Pole Operation breakers (IPO), there are various internal schemes built to protect for pole discordance (one pole open, two closed, event measured over time frame (milliseconds)), these schemes may re-trip the breaker, initiate breaker failure protection or trip a bus lock out relay. In DC control schemes fuses and panel circuit breakers protect for wiring faults. Do these devices need to be tested? Is there an obligation to test the distribution circuit breakers for correct operation points? Is there an obligation to replace fuses after a defined time period?
Individual
Thad Ness
American Electric Power
No
In Table 1a for the component “Station dc Supply (used only for UVLS and UFLS)”, the interval prescribed is "(when the associated UVLS or UFLS system is maintained)" and the activity is to "verify the proper voltage of the dc supply". The description of the interval "(when the associated UVLS or UFLS system is maintained)" needs to be changed. Relay personnel do not generally take battery readings. The interval should read “according to the maximum maintenance interval in table 1a for the various types of UFLS or UVLS relays". The testing does not need to be in conjunction with the relay testing, it is only the test interval that is important, although relay operation during relay testing is a good indicator of sufficient voltage of the battery. The monitoring and/or maintenance activities listed for batteries are not appropriate in Tables 1b and 1c. There are no commercial battery monitors that monitor and alarm for electrolyte level of all cells. Why not move the electrolyte level to the 18 month inspection and actually open the possibility of condition monitoring to commercially available devices? Or give an option to do the electrolyte check at other time intervals (perhaps 12 months) by visual electrolyte inspection and still allow the monitoring of other functions on the listed 6 year schedule using condition monitoring. It makes no sense to prescribe an unattainable condition monitoring solution. The way that the tables are written, there is no advantage to use the charger alarms since battery maintenance requirements are not reduced in any way.
Yes
No
The measure includes the entire definition of "Protection System". Remove the definition from the measure and let the definition stand alone in the NERC glossary. 1.3 Data Retention This calls for past 2 distinct maintenance records to be kept. Since UFLS interval can be 12 years, this would mean that we would need to keep records for 24 years. This is not realistic and consideration should be given to choosing a reasonable retention threshold.
Yes
Yes
Yes

The "Supplementary Reference" and the "Frequently-Asked Questions" document should be combined into a single document. This document needs to be issued as a controlled NERC approved document. AEP suggests that the document be appended to the standard so it is clear that following directions provided by NERC via the document are acceptable, and to avoid an entity being penalized during an audit if the auditor disagrees with the document's contents. NiCAD batteries should not be treated differently from Lead-Acid batteries. NiCAD battery condition can be detected by trending cell voltage values. Ohmic testing will also trend battery conditions and locate failed cells (although will usually lag behind cell voltages). A required load test is detrimental to the NiCAD manufacturer's business, and will definitely hurt the NiCAD business for T&D applications. Historically NiCADs may have been put into service because of greater reliability, smaller space constraints, and wider temperature operation range. "Individual cell state of charge" is a bad term because it implies specific gravity testing. Specific gravity cannot be measured automatically (without voiding battery warranty or using an experimental system), and when it is measured, it is unreliable due to stratification of the electrolyte and differing depths of electrolyte taken for samples. "Battery state of charge" can be verified by measuring float current. Once the charging cycle is over the battery current drops dramatically, and the battery is on float, signaling that the battery has returned to full state of charge. This is an appropriate measure for Level 3 monitoring as float current monitoring is a commercially viable option and electrolyte level monitoring is not. In Table 2b, why is Ohmic testing required if the battery terminal resistance is monitored? Cell to cell and battery terminal resistance should not be monitored because they will be taken in 18 month intervals. This further supports the argument that the battery charger alarms would be sufficient for level 2 monitoring, while keeping an 18 month requirement for Ohmic testing, electrolyte level verification, and battery continuity (state of charge). Automatic monitoring of the float current should be sufficient for level 3 monitoring as it gives state of charge of the string, and battery continuity (detect open cells). Shorted cells will still be found during the Ohmic testing and a greater interval is sufficient to locate these problems.

Individual

Barb Kedrowski

We Energies

No

Table 1a, Protective Relays: Change 1st line to: "Test and calibrate if necessary the relays…" Table 1a, Protective Relays: 3rd line: Change "check the relay inputs…" to "verify the relay inputs…". The term "check" is not defined, whereas "verify" is. Tables 1a & 1b We agree that six / twelve years is an acceptable interval for relay maintenance. Table 1a & 1b, Control & Trip Circuits: The proposed addition to require tripping circuit breakers during Protection System maintenance is detrimental to BES reliability and should be removed. Generating unit protection system maintenance is done during scheduled outages. The high voltage breaker on a generating unit often remains energized to backfeed and supply station auxiliaries when the generator is offline. The proposed requirement will increase the amount of equipment requiring an outage for maintenance, and possibly the length of the outage, resulting in significantly more equipment out of service as well as increased costs. This requirement also results in greater maintenance efforts and costs when there are redundant protection system equipment (breaker trip coils, lockout relays, etc), which is contrary to good practice and reliability. Many of the breakers that We Energies, as the Distribution Provider, trips from its BES protection systems are not owned by We Energies and are owned by a separate transmission company. The trip testing and maintenance of the transmission company may not coincide with our relay maintenance testing program. The standard shall have allowances for the entity to ONLY test or maintain equipment that it OWNS! Table 1a, Station dc supply: The activity to verify the state of charge of battery cells is too vague, and requires more specific action. We assume that the drafting committee is recommending specific gravity measurements. Specific gravity measurements have not been shown to an accurate indicator on state of charge. In addition, as shown in the nuclear power industry, there is no established corrective action that is taken based on specific gravity results (eg. Don't require a test where there is no acceptable corrective action). The activities to "verify battery continuity" and "check station dc supply voltage" are also vague and need to be more clearly specified what is intended. The 3 month time interval for battery impedance testing is too frequent. 18 month or annual testing is more appropriate. The 3 calendar year performance or service test is too frequent and will actually remove life from a battery and reduce reliability. Recommend capacity testing no more that every 5 years and more frequent test if the capacity is within 10% of the end of life or design. This is consistent with the nuclear power industry. Table 1b, Station dc supply: Recommend a change or addition to Table 1b - Recommend a level 2 monitoring (not just a default to the level 1 maintenance activities) which allows for the removal of quarterly "check" of electrolyte levels, DC supply voltage, and DC grounds - if station DC supply (charger) voltage is continuously monitored (eg. one should not have detrimental gassing of a battery if the float voltage of the battery is properly set and monitored). Table 1a, Associated communications systems: The requirement to verify

functionality every three months is excessive; verifying this every twelve months is adequate. Tables 1a & 1b – Although the latest standard provided some additional clarification, more clarification is required on what maintenance / testing is ONLY required for UFLS/UVLS protection systems vs. BES protection systems (eg. UFLS / UVLS systems – Is a verification of proper voltage of the DC supply the only battery or DC supply required (eg. no state of charge, float voltage, terminal resistance, electrolyte level, grounds, impedance or performance test, etc.)?

Yes

No

The requirement to retain data for the two most recent maintenance cycles is excessive. The required data should be limited to the complete data for the most recent cycle, and only the test date for the previous cycle.

Yes

Yes

Yes

Group

FirstEnergy

Sam Ciccone

FirstEnergy Corp.

No

We support most of the maintenance activities detailed in the Tables, but question the verification of battery cell-to-cell resistance. On some types of battery units, this internal connection is inaccessible. We suggest substituting "unit-to-unit" in place of "cell-to-cell".

No

Although we agree that Requirement 1 is important because it establishes a sound PSMP, a HIGH VRF assignment is not appropriate and it should be changed to LOWER. By definition, a requirement with a LOWER VRF is administrative in nature, and documentation of a program is administrative. Assigning a LOWER VRF to R1 is more logical since R4, which is the requirement to implement the PSMP, is assigned a MEDIUM VRF because, if violated, it could directly affect the electrical state or the capability of the bulk electric system. Additionally, revising the VRF to LOWER would provide a consistent assignment to a VRF on a similar requirement in the proposed FAC-003-2 standard.

Yes

We agree with the Measures but suggest some improvements: 1. In Measures M2 and M3, the term "should" must be changed to "shall" 2. In Measure M2, the Distribution Provider entity is missing

Yes

Yes

We support the reference document and appreciate the SDT's hard work developing this document. We offer the following suggestions for possible improvements: 1. The reference document should be linked in Section F of the standard. Otherwise it may be difficult for someone to navigate the NERC website in search of the document. 2. Section 2.2 – It would be helpful if a short discussion of the reasons for the changes to the definition of Protection System was included in this reference document. In addition, it would be beneficial to discuss what is included in "dc supply" components, such as "dc supplies include battery chargers which are required to be maintained per the Tables in PRC-005-2." 3. Section 8.1 – The fourth bullet which reads "If your PSMP (plan) requires more then you must document more." Should be removed. This is already covered in the sixth bullet which states "If your PSMP (plan) requires activities more often than the Tables maximum then you must document those activities more often."

Yes

We support the FAQ document and appreciate the SDT's hard work developing this document. The reference document should be linked in Section F of the standard. Otherwise it may be difficult for someone to navigate the NERC website in search of the document.

Implementation Plan a. We do not support the 3 month implementation timeframe for Requirement 1. For many entities, it will take some time to develop a sound PSMP that meets the new PRC-005-2 standard. We suggest a 12 month implementation which we believe is more logical and in alignment with the implementation timeframe for Protection System Components with maximum allowable intervals of less than 1 year, as established in Table 1a. b. Although we

support the implementation timeframes for Requirements R2, R3, and R4, we do not support the required periodic percentages of protections systems to be completed. There could be numerous reasons where an entity has to adjust its program schedule which could lead to noncompliance with these percentage milestones. We suggest simply requiring 100% completion of the maintenance per the maximum maintenance intervals. Alternatively an entity should have the flexibility to indicate they have fully transitioned to the new standard during the early stages of the implementation plan if their existing maintenance practices meet or exceed the standards minimum expectations. Doing so should negate the need to produce the "% complete" implementation status.

Individual

Jianmei Chai

Consumers Energy Company

No

1. If multiple redundant Protection System components, with associated parallel tripping paths, are provided, Table 1a, 1b, and 1c require that each parallel path be maintained, and that the maintenance be documented. Often, these multiple schemes are provided not to meet specific reliability-related requirements, but instead to provide operating flexibility. Testing these likely will require outages, and those outages may result in decreased reliability. Further, the documentation related to maintenance of all paths will be very cumbersome, and will lead to increased compliance exposure simply by its volume. This may perversely lead to entities NOT installing the redundant schemes, resulting in decreased reliability. 2. Many of the activities described in the Tables are not, by themselves, clear. The standard should include sufficient detail such that entities are clear as to what must be done for compliance, rather that relying on supplementary documents for this information. For example, it's not clear, in Table 1a (Station DC Supply), what is meant by, "Verify that the dc supply can perform as designed when the ac power from the grid is not present." Similarly, it isn't clear from the general description within the Tables that components possessing different monitoring attributes within a single scheme, may be distinguished such that differing relevant tables can be used for the separate components. 3. In Table 1a, Station DC Supply, one of two optional activities is to "Verify that the station battery can perform as designed by evaluating the measured cell/unit internal ohmic values to station battery baseline. Battery assemblies supplied by some manufacturers have the connections made internally, making this option unavailable. Experience with ASME standards show that NERC and SDT members may be jointly and separately liable for litigation by specifying methods that either prefer or prohibit use of certain technologies. 4. Two of the four Maintenance Activities that begin with "Perform a complete functional trip …" conclude with "… does not require actual tripping of circuit breakers or other interrupting devices. Do the other two such activities therefore require tripping of circuit breakers or other interrupting devices? 5. Performance of the minimum activities specified within Table 1a for legacy systems, particularly regarding control circuits, will require considerable disconnection and reconnection of portions of the circuits. Such activities will likely cause far more problems on restoration-to-service than they will locate and correct. We suggest that the SDT reconsider these activities with regard for this concern.

Yes

Yes

Yes

Yes

No

1. FAQ II.3A attempts to clarify the requirements of "Verify the proper functioning of the current and voltage signals necessary for Protection System operation from the voltage and current sensing devices to the protective relays" suggesting that "simplicity can be achieved" by verifying that the protective relays are receiving "expected values." It concludes with a statement of the need to "ensure that all of the individual components are functioning properly …" implying that just verifying "expected values" at the protective relay end of the circuit may be inadequate. 2. FAQ II.4D describes what is required for testing of aux relays to include, "that their trip output(s) perform as expected". Does that include timing tests? (Example – high speed ABB AR relays vs. standard AR relays). 3. The SDT responses to the Draft 1 comments regarding "grace periods" essentially says, "Absolutely not". However, FAQ IV.1.D reflects data retention requirements relative to an entities' program which includes a grace period!

1. In the Standard, Footnote 2 and Footnote 3 are identical. We presume that some information has been omitted. 2. We do not agree that Footnotes are an appropriate method of providing information that is important to the application of the Standard. Important information should be provided within the standard text.

Group
Santee Cooper
Terry L. Blackwell
SC Public Service Authority
No comment.
Yes
Yes
We are concerned with the long-term implementation of the data retention requirements for activities with long maximum intervals. For example, if you are performing an activity that is required every 12 years, the implementation plan says that you should be 100% compliant in 12 years following regulatory approval. However, assuming that 100% compliant meant that you got through all of your components once, you still would not be able to show the last two test dates. 12 years from now, would you still have to discuss the program you were using prior to 12 years ago for those components to have a complete audit, because of having to address the last 2 test dates?
No
In R1, a “Failure to specify whether a component is being addressed by time-based, condition-based, or performance-based maintenance” by itself is a documentation issue and not an equipment maintenance issue. Suggest this warrants only a lower VSL, especially when one of the required components can only be time based.
No Comment.
No comment.
There is some discussion in the documents, such as the definition of component in the Frequently-Asked Questions, about the idea that an entity has some latitude in determining the level of “protection system component” that they use to identify protection systems in their program and documentation. The example given is about DC control circuitry. There are requirements in this standard that are specific to a component, such as R1.1 – Identify all protection system components. Historically, if your maintenance and testing program is defined as (say, for relays) testing all the relays in a station at one time, your program, test dates, etc. could be identified by the station. There needs to be some addition, possibly to the Frequently asked questions, to explain what kind of documentation will be required with this new standard. For example, if your program is to test all the relays at a station every 4 years, and all the relays are tested at the same time, can your documentation of your schedule (the “date last tested” and previous date) be listed by station (accepting that you should have the backup data to show the testing was thorough) or must you be able to provide a list by each relay. Without some clarification, it seems like this could get confusing at an audit with many of the requirements pertaining to “each component.”
Individual
Art Buanno
ReliabilityFirst Corp.
Yes
The SDT has made significant and worthwhile changes to these tables. However, these tables still seem overly complex and should be simplified. One possibility would be to eliminate Table 1c and use Table 1b for those components that meet certain monitoring attributes. There are some errors in Table 1a in rows 5 and 6. In row 5 in the component column the word “contact” is missing. In the same row in the third column, there is an extra period. In row 6 in the third column, “circuit” should be “circuits” as in the other rows. The maintenance intervals seem to give preference to solid-state outputs but there is no evidence given that these are truly more reliable than an electromechanical trip at least not sufficient to double the maintenance interval.
No
R4 is the implementation of a maintenance program which is extremely important. Effective operation of the BES is so dependent on adequate maintenance that requirement R4 warrants a High VRF. It seems that requirement R3 may actually be better categorized as having an Operations Assessment Time Horizon as the entity needs to review events to analyze the adequacy of maintenance periods.
Yes
Yes
Yes
Yes

The SDT should be congratulated on its hard work in making substantial improvements to an existing standard. In revising the draft standard, the SDT should consider the difficulty an entity will have in providing the evidence required to show compliance. R1 unnecessarily limits PSMPs to “Protection Systems that use measurements of voltage, current, frequency and or phase angle to determine anomalies.” However, if an entity applies devices that protect equipment based on other non-electrical quantities or principles such as temperature or changes in pressure, the entity is not required to maintain them. These types of devices have long been considered by many organizations as important forms of protection and therefore in some instances are connected to trip. There are also many organizations that consider these types of devices too unreliable to use as protection and therefore only connect them for monitoring (and not to trip). If protection based on non-electrical quantities is not properly maintained, it will Misoperate and will negatively impact reliability. The standard cannot simply ignore a type of protection that can ultimately affect the reliability of the BES.
Group
PacifiCorp
Sandra Shaffer
PacifiCorp
Yes
Yes
Agree with the exception that the time horizon for implementation needs to recognize that documentation for maintenance tasks performed prior to this standard may not match current requirements and there should be no penalty for this.
No
Data retention requirements need to be modified. The need to maintain records of two previous tasks is excessive, one should be adequate. Per the two previous task requirements an entity may need to maintain records for 35 years.
Yes
Yes
Yes
R1.1: Please clarify what the requirements for “identify” means. Does each component need to be “identified” in our maintenance system, or at least referenced in the maintenance program or labeled in the field??? R4.3: Please provide guidance on what will be required to prove compliance that “maintenance correctable issues” have been identified and corrective actions initiated. What is the implication of finding maintenance correctable issues as it relates to other requirements for no single points of failure? In other words, if during maintenance a relay is found to have failed, is there an acceptable time period under which we may operate the system without redundancy until a repair can be made? Similarly, if part of a redundant relay system is taken out of service for maintenance, may the facility it was protecting be left in service? If not, then is the implication that protection systems must be triple redundant in order to do relay maintenance on in service equipment? Otherwise facilities would always have to be removed from service to do relay maintenance. Section D / 1.3: The data retention requirement for the two most recent performances of each maintenance activity is excessive. The requirement should be limited to the most recent or all activities since the last on-site audit. At the worse case an entity would have to retain records for up to 35 years for maintenance performed on a 12 year cycle. Table 1a “Protective Relay” entry: The last maintenance activity is listed as “for microprocessor relays verify acceptable measurement of power system input values ” for which a 6 year interval is provided”. How is this different than the next item “Voltage and Current Sensing Inputs to Protective Relays and associated circuitry” which is on a 12 year interval?? Please clarify this. Implementation Plan: This revised standard will drive significant revisions in existing maintenance programs. 3 months is not adequate time after approval to ensure compliance with R1. A minimum of 6 months should be utilized after regulatory approval. The Implementation plan requirements should also recognize that if the requirement to maintain records of the two previous maintenance tasks is implemented, it may not be possible to produce this information upon implementation. The implementation plan should be structured that the requirement to produce previous maintenance records should be phased in as the maintenance is performed. (ie. The requirement to produce two previous records for maintenance performed on a two year cycle should not be enforced until four years after implementation).
Individual
Tyge Legier
San Diego Gas & Electric

No
Proofing of CT circuits is not always trivial. Given this function is not presently being performed and documented by the company, a reasonable grace period would be required to achieve compliance. The company believes present practice, such as verification that relay current inputs are not zero and that phases are balanced, is a reasonable indication individual CTs are functioning properly. An entities protection system maintenance program is a Time Based Maintenance program. The protection system maintenance program describes the maintenance intervals and states that the protection system maintenance is triggered every 4 years. The maintenance program describes that the due date for compliance is 6 months past the trigger date to allow for planning and scheduling of the maintenance activity. Therefore the actual due date for the 4 year maintenance interval is 4 years and six months from the last maintenance completion date. The four year six month time based interval is within the six year maximum time based interval as required by PRC-005-2. Given the above, is the four year six month interval as described in the entities maintenance program compliant with PRC-005-2?
No
No
No
No
No
Group
Florida Municipal Power Agency
Frank Gaffney
Florida Municipal Power Agency
No
Will the Standard Introduce Technical Feasibility Exceptions to PRC Standards? A large proportion of the batteries (as high as 50% as reported by some SMEs) are not able to accommodate all of the tests prescribed in the draft standard. The phrase “Verify Battery cell-to-cell connection resistance” has entered the table where it did not exist before. On some types of stationary battery units, this internal connection is inaccessible. On other types the connections are accessible, but there is no way to repair them based on a bad reading. And bad cell-to-cell connections within units will be detected by the other required tests. This requirement will cause entities to scrap perfectly good batteries just so this test can be performed, with no corresponding increase in bulk electric system reliability while taking an unnecessary risk to personnel and the environment. And because buying battery units composed of multiple cells allows space saving designs, entities may be forced to buy smaller capacity batteries to fit existing spaces. This may end up having a negative effect on reliability. Suggest substituting “unit-to-unit” wherever “cell-to-cell” is used in the table now. The Standard Reaches Beyond the Statutory Scope of the Reliability Standards As written, the standard requires testing of batteries, DC control circuits, etc., of distribution level protection components associated with UFLS and UVLS. UFLS and UVLS are different than protection systems used to clear a fault from the BES. An uncleared fault on the BES can have an Adverse Reliability Impact and hence; the focus on making sure the fault is cleared is important and appropriate. However, a UFLs or UVLS event happens after the fault is cleared and is an inexact science of trying to automatically restore supply and demand balance (UFLS) or restore voltages (UVLS) to acceptable levels. If a few UFLS or UVLS relays fail to operate out of potentially thousands of relays with the same function, there is no significant impact to the function of UFLS or UVLS. Hence, there is no corresponding need to focus on every little aspect of the UFLS or UVLS systems. Therefore, the only component of UFLS or UVLS that ought to be focused on in the new PRF-005 standard is the UFLS or UVLS relay itself and not distribution class equipment such as batteries, DC control circuitry, etc., and these latter ought to be removed from the standard. In addition, most distribution circuit are radial without substation arrangements that would allow functional testing without putting customers out of service while the testing was underway, or at least without momentary outages while customers were switched from one circuit to another. Therefore, as written, we would be sacrificing customer service for a negligible impact on BES reliability.
No
R1, R2 and R3 are administrative in nature and ought to be a Low VRF, not a High or Medium VRF. R4 is doing the actual maintenance and testing and ought to be the highest VRF in the standard. Medium VRF is appropriate for R4.

Yes

M1 could be shortened to just a program in accordance with R1, rather than repeat the entire requirement

No

For the VSLs of R1 and R2, we do not understand where the 5%, 10% come from. There are only a few types of components, relays, batteries, current transformers and voltage transformers, DC control circuitry, communication, that's 6 component types by our count, so, missing 1 component type in discussing the type of maintenance program is already a 17% error and Low, Medium and High VSLs are meaningless as currently drafted and every violation would be Severe, was the intention to apply this is a different fashion? Perfection is Not A Realistic Goal R4 allows no mistakes. Even the famous six sigma quality management program allows for defects and failures (i.e., six sigma is six standard deviations, which means that statistically, there are events that fall outside of six standard deviations). PRC-005 has been drafted such that any failure is a violation, e.g., 1 day late on a single relay test of tens of thousands of relays is a violation. That is not in alignment with worldwide accepted quality management practices (and also makes audits very painful because statistical, random sampling should be the mode of audit, not 100% review as is currently being done in many instances). FMPA suggests considering statistically based performance metrics as opposed to an unrealistic performance target that does not allow for any failure ever. Due to the shear volume of relays, with 100% performance required, if the standards remain this way, PRC-005 will likely be in the top ten most violated standards for the forever. In other words, 1-2% of components outside of the program should be allowed without a violation and Low VSL should start at a non-zero number, such as "Entity failed to complete scheduled program for 3-6% of components based on a statistically significant random sampling" or something to that affect. There is a fundamental flaw in thinking about reliability of the BES. We are really not trying to eliminate the risk of a widespread blackout, we are trying to reduce the risk of a widespread blackout. We plan and operate the system to single and credible double contingencies and to finite operating and planning reserves. To eliminate the risk, we would need to plan and operate to an infinite number of contingencies, and have an infinite reserve margin, which is infeasible. Therefore, by definition, there is a finite risk of a widespread blackout that we are trying to reduce, not eliminate, and, by definition, by planning and operating to single and credible double contingencies and finite operating and planning reserves, we are actually defining the level of risk from a statistical basis we are willing to take. With that in mind, it does not make sense to require 100% compliance to avoid a smaller risk (relays) when we are planning to a specified level of risk with more major risk factors (single and credible double contingencies and finite planning and operating reserves).

Individual

Greg Rowland

Duke Energy

No

General comment – the draft changes the word "verify" to "check" in several places; should use consistent phrasing throughout the standard. With regards to Table 1a, we have the following comments: • Control and trip circuits with electromechanical trip or auxiliary contacts (except for microprocessor relays. UVLS or UFLS) – We believe that while there may be value in a 6 calendar year cycle, this will be difficult to accomplish, since you either have to get outages scheduled or block protection, which risks reliability. Since this is essentially a re-commissioning check, the cycle should be 12 calendar years. Also 6 years appears to be in conflict with the system protection standard. • Control and trip circuits with unmonitored solid-state trip or auxiliary contacts (except for UVLS or UFLS) – agree with 12 calendar years as consistent with electromechanical above. • Control and trip circuits with electromechanical trip or auxiliary (UVLS or UFLS Systems Only) – 6 year cycle should be changed to 12 calendar years (see comment above on non-UVLS/UFLS). • Control and trip circuits with unmonitored solid-state trip or auxiliary contacts (UVLS or UFLS Systems Only) – agree with change to 12 calendar years. • Station dc Supply (used only for UVLS or UFLS) – Strike the word "Station". We don't differentiate between dc supply used for UFLS and other protection. • Station dc supply – Change 18 calendar months to 24 months, since this testing requires generator outages. Nuclear plant fuel cycles can be longer than 18 months. • Associated communications systems – More clarity is needed regarding what is to be included in the definition of "Associated".

Yes

No

M4 states that entities shall have evidence such as maintenance records or maintenance summaries (including dates that the components were maintained). We would like to see M4 revised/expanded to explicitly include the FAQ Section IV 1.B information which states that forms

of evidence that are acceptable include, but are not limited to: • Process documents or plans • Data (such as relay settings sheets, photos, SCADA, and test records) • Database screen shots that demonstrate compliance information • Diagrams, engineering prints, schematics, maintenance and testing records, etc. • Logs (operator, substation, and other types of log) • Inspection forms • U.S. or Canadian mail, memos, or email proving the required information was exchanged, coordinated, submitted or received • Database lists and records • Check-off forms (paper or electronic) • Any record that demonstrates that the maintenance activity was known and accounted for.

No

The VSLs for PRC-005-2 requirements R1, R2 and R4 have significantly tighter percentages than the corresponding requirements in PRC-005-1. We believe that the Lower VSL should be up to 10%, the Moderate VSL should be 10%-15%, the High VSL should be 15% to 20%, and the Severe VSL should be greater than 20%, which is still a lower percentage than the 25% Lower VSL currently in PRC-005-1.

Yes

Yes

Group

The Detroit Edison Company

Daniel Herring

NERC Compliance

No

Suggest that the interval for cell ohmic testing on VRLA batteries be changed to 12 months. Also, include ohmic testing of NiCad batteries at 18 mos as an option.

No

No

No

Yes

Yes

Suggest that the implementation plan for R1 (PSMP) be changed to 12 months. The statement in R1.1, “Identify all Protection System components” regarding the PSMP should be clarified. Is a complete list of every “component” of each specific protection system required to be included in the PSMP?

Group

Hydro One Networks

Sasa Maljukan

Hydro One Networks, Inc.

No

Table 1a: o V and I sensing to relays – 12 years? Why not perform this activity with mtce activities associated with relay mtce so that they line up? It would only be an incremental amount of work to perform this with associated relay maintenance work o Removal of requirement for testing of unmonitored breaker trip coils? Is it really the intention of the SDT to remove a requirement that would drive the industry to install TC monitors on breakers to improve reliability? o UFLS/UVLS DC control and trip circuits – Due to the distributed nature of this program, random failures to trip are not impactive to the overall operation of the UFLS protection. There should be no requirement to check the DC portion of these protections any more often than the DC circuit checks associated with that LV breaker. Since it is clear the requirement does not include the need to trip the breakers why the need to check the trip paths? Deletion of this requirement leaves the requirement to check only the relays and relay trip outputs from the protections every 6 years (or as often as the protective relay component type). o Along the same lines as the above comment should the maintenance activities for “UVLS and UFLS relays that comprise a protection scheme distributed over the power system” not be the same as “Protective Relays” Table 1c: o Level 3 attributes for “Associated communications systems” might better read “Evaluating the performance and quality of the channel as well as the performance of any interface to connected protective relays and alarming if the channel/protective relay connections do not meet performance criteria” o We believe that some

of the proposed maintenance intervals for station DC supply are too stringent and that they would not produce significant increase in reliability to justify associated incremental expenditure. For example we suggest that the following changes are considered: - The interval for eelectrolyte level check for all batteries except VRLAs and internal measured cell/unit Ohmic value for VRLAs be extended to 6 months instead of current time period of 3 months. - The performance or service capacity test of the VRLA battery banks to be extended from 3 years to 5 years.

Yes

Yes

Yes

Yes

Yes

o Footnotes 2 and 3 on page 4 are identical. Delete footnote 3. o UFLS systems by design can suffer random failures to trip. It would make sense for a requirement to exist to perform maintenance on the UFLS relay as their failure to operate may affect numerous distribution level feeders. However maintenance on associated DC schemes connected to the devices should only be done on the same frequency as maintenance on the relevant interrupting devices. Consideration should be given to exempting schemes that have a maintenance program in place on those distribution level devices from PRC-005 Standard-specified maintenance intervals. Such Standard-specified intervals could apply to interrupting devices that have no maintenance program in place.

Group

PPL Supply

Annette M. Bannon

PPL Generation, LLC

No

PPL Generation, on behalf of the entities listed above, has the following comments on the dc entries in these tables: 1. Table 1a, Table 1b, Table 1c- Station DC supply - Maintenance Activities – references substation batteries. For generators, shouldn't that reference be station battery? Substation implies an association strictly with transmission, not generation. 2. Station DC supply - verify Battery continuity. What is the technical basis for this requirement? Neither battery installation and operation instructions nor technical reviews explain the basis for how this verification is supposed to work. NERC's Protection System Maintenance: A Technical Reference does not address this requirement. The Frequently-Asked Questions provides some ways that this verification can be completed. However, one example is tied to the microprocessor battery chargers. If there is a technical basis for this requirement, it should be provided. 3. Condition based monitoring on station dc supply - it appears the Table 1b excludes any condition based monitoring of the batteries because of the requirement for monitoring electrolyte level, individual cell state of charge, cell to cell and battery terminal resistance. Most monitoring equipment does not monitor those functions. 4. In general, the Tables are especially confusing in the dc system area. The “lines” overlap and need to be labeled, so they can be referenced in a maintenance document to show how the appropriate program can be followed. Each line should be separate in the function stated, so one can identify what has to be done to comply. 5. Provide examples of “non-battery-based dc equipment” that is covered under this standard. 6. For dc supply, the changes from the Sept. 2007 NERC “Protection System Maintenance”, A Technical Reference seem too restrictive. The Sept. 2007 document contained a solid maintenance program. What is the basis for the change?

No comment.

No

Measurers M1 – requires having a maintenance program that addresses control circuitry associated with protective functions from the station dc supply through the trip coil(s) of the circuit breakers. Some generators do not own this equipment to the circuit breaker or other interrupting devices. The requirement should be to maintain and test the equipment owned by the generator. Data Retention 1.3 references on-site audits. Entities registered as GO and GOP are not audited on-site.

No Comment.

No Comment.

No Comment.

1. For applicability to generators, the responsibility for a maintenance program will usually rest with the plant operator when the operator and plant owner(s) are different entities. Consider

changing the applicability as it applies to the generator in such situations. 2. Time-based frequency should allow for flexibility; i.e. engineering analysis should allow the entity to exceed the intervals noted in the table. An engineering evaluation that defines a test interval differently than those intervals prescribed in the table should allow an entity to build a program with different intervals. 3. A Grace Period should be defined. This allows a tolerance window to allow for unforeseen occurrences. A grace period would allow for some schedule flexibility and reduce the number of reports to the regulator for exceeding an interval by a reasonable about. 4. The implementation plan for this revision should take into account that a generator outage may be required to implement a new maintenance frequency. The implementation plan should account for outage time, especially nuclear plants that have extended operating cycles. 5. Table 1b Protective Relays Level 2 Monitoring Attributes includes input voltage or current waveform sampling three or more times per power cycle. No further guidance is provided in the reference documents. If this sampling rate is not provided in the specification by the manufacturer, what can the entity use to demonstrate that the attribute is satisfied? Please provide additional guidance. 6. Consider numbering the tables to improve cross-referencing the entries in program documentation. This will allow entities to reference in program documents exactly which activities are being implemented in accordance with the standard. 7. Requirement 1.1 states, “Identify all Protection System components.” This is too broad and must be clarified.

Individual

Claudiu Cadar

GDS Associates

No

- Table 1a. Protective relays oFor microprocessor relays need guidance in how all the inputs/outputs will be checked and how is determined which one are “essential to proper functioning of the Protection System” oFor microprocessor relays need guidance in how the acceptable measurement is physically determined. - Table 1a. Voltage and current sensing inputs to Protective Relays and associated circuitry oHow verify the proper functioning? By ratio test comparison? - Table 1a. Control and trip circuits with electromechanical trip or auxiliary contacts (except for microprocessor relays, UFLS or UVLS) oThis can be dangerous if backup protection or breaker failure protection schemes not disabled at the time of the functional trip test - Table 1a. Control and trip circuits with electromechanical trip or auxiliary (UFLS/UVLS systems only) oMissing the word “contacts” in the naming of the type of PS component oIf distribution circuit has no breaker bypass will require a tremendous amount of switching or customer outages. - Table1a. Station dc supply (that has as a component Vented Lead-Acid batteries) oWhy is this 18 months when Regulated batteries are required to be verified every 3 months? - Table1a. UVLS and UFLS relays that comprise a protection scheme distributed over the power system oNeed to define this type of UVLS and UFLS relays

No

- We do agree with the majority of the assignments that have been made, however the standard needs specific guidance so to be clearly evidentiated the components as included in the definition of Protection System. The applicability of the standard does not address the current issues regarding radial + load serving only situation when Protection System not designed to provide protection for the BES. - Not sure if the percentages corresponding to the events and activities are appropriately assigned. What were the criteria on which all these percentages are based upon? - Requirement R3 Severe VSL note 3 allows smaller segment population than the Lower VSL. How these segment limits were developed?

- Definition of Terms Used in the Standard. Protection System Maintenance Program oMonitoring. Concerned about the interpretation of this activity description oUpkeep. Not sure about how this activity will be enforced - A. Introduction. 4.2. Facilities. oThe applicability does not address the current issues regarding radial + load serving only situation when Protection System not designed to provide protection for the BES. Standard should clearly state this exemption. - B. Requirements. o1.1. The standard does not provide guidance in how to identify the components of a transmission Protection System (tPS). See prior comment referring to the case of a radial load serving transmission topology. o1.3. Requirement should read “For each identified Protection System component from Requirement 1, part 1.1, include all maintenance activities listed in PSMP and specified in Tables 1a, 1b, or 1c associated with the maintenance method used per Requirement 1, part 1.2.” o1.4. This requirement should be eliminated since already included in Table 1a and covered through Requirement 1, part 1.3. o4.3. Footnote 3 shall be eliminated since duplicates footnote 2 - C. Measures oM1. The added wording in the Protection System definition, requirements and measures with respect to the inclusion of the “associated circuitry from the voltage and current sensing devices” and control circuitry “through the trip coil(s) of the circuit breakers or other interrupting devices” seem right but a bit excessive under current

circumstances (form of the standard). The standard should clearly specify how the maintenance program will address the verification, monitoring, etc. of the actual wiring and the trip coils. We suggest that the wording of the standard to reflect that the maintenance activities on the wiring will be conducted in a visual fashion without implying activities that require disconnecting the primary equipment. We recommend to change the Protection System definition to read “up to the trip coils(s)” instead the word “through” (see comment on the definition as well). We consider that the gain in reliability by pursuing a thorough maintenance program that require to take primary equipment out of service (which in many instances will lead to the entire substation being put out of service) cannot counterweight the sole purpose of the standard and the economics emerging from this program.

Individual

Kirit Shah

ameren

No

Ameren does agree that draft 2 is a considerable improvement from draft 1 of PRC-005-2; however the following still need to be addressed. 1) Use “Control circuitry” to be consistent with the proposed definition. If ‘and trip’ was included so that users would know this is a trip circuit, then the definition should use ‘Trip circuitry’ instead of ‘Control circuitry’. It is important to use consistent terminology throughout the definition and the standard. 2) Please add row numbers in each of Tables 1a, 1b, and 1c, and arrange so that row 1 in each table corresponds, etc. (or state which rows correspond to each other.) This would help clarify movement from table to table. The number of sub clauses, nuances, and varied Type of Component descriptors among rows in the same table as well as from table-to-table can be overwhelming. This would help keep Regional Entities and System Owners from making errors. 3) Please clarify that the instrument transformer itself is excluded. The standard indicates that only voltage and current signals need to be verified. The FAQ seems to cover this, but see our comments on your question 6. 4) Clarifications need to be made on testing requirements on trip contacts relative to microprocessor vs. EM relays. Digital relays have electromagnetic output relays. Do they fall into the electromechanical trip or solid state trip? 5) There appears to be an inconsistency in the use of “check” vs. “verify” in the tables. Consider modifying the definition of “verification” to “A means of determining or checking that the component is functioning properly or that the maintenance correctable issues are identified”, eliminate use of the term “verify proper functioning” (which seems to be redundant by PRC-005-2 standard definition), and simply use the term “verify”. 6) Alternately if the term “check” replaced “verify proper functioning” in order to allow for the completion of a maintenance activity within the required interval and yet account for an outstanding maintenance correctable issue being present, suggest the other remaining activities in the tables where the term “verify proper functioning” is used, also be replaced with “check”. 7) If there is an intentional difference between “verify” and “check”, shouldn’t “check” be defined if it is to be included as a PSMP activity term? 8) Functional trip testing will require extensive analysis and could involve an extensive testing evolution to ensure the correct circuit is tested without unexpected trip of other components, particularly for generator protection systems and some transmission configurations. The complexity of the system and the test would be conducive to an error that resulted in excessive tripping, thus affecting the reliability of the BES. It would seem that the potential for an adverse affect from this test would be greater than the benefit gained of testing the circuit. In addition, scheduling outages to perform the functional trip testing in conjunction with other outages required to perform maintenance and other construction activities will be difficult due to the large number of outage requirements for the functional testing. This will challenge the BES more often and thus reduce reliability. For these reasons functional trip testing is too frequent, and should be extended to twelve years. 9) In battery maintenance table, we suggest that “cell/unit” be changed to “cell or unit.” Suggest substituting “unit-to-unit” wherever “cell-to-cell” is used in the table now. Many batteries are packaged such that the individual cells are not accessible. 10) IEEE battery maintenance standards call for quarterly inspections. These are targets, though, not maximums. An entity wishing to avoid non-compliance for an interval that might extend past three calendar months due to storms and outages must set a target interval of two months thereby increasing the number of inspections each year by half again. This is unnecessarily frequent. We suggest changing the maximum interval for battery inspections to 4 calendar months. For consistency, we also suggest that all intervals expressed as 3 calendar months be changed to 4 calendar months. 11) Replace “State of charge of the individual battery cells/units” with “Voltage of the individual battery cells or units”. 12) The maximum maintenance interval for a lead-acid vented battery is listed at 6 calendar years for performing a capacity test. This type of test has been proven to reduce battery life and an interval of 10 to 12 years would be better. 13) The level 2 table regarding Protection Station dc supply states that level 1 maintenance activities are to be used, but then goes on to give a list of Maintenance Activities that don’t match those in level 1. Which activities shall we use? Same situation for Station DC Supply (battery is not used) where the 18 month interval is missing. 14) Also, Table 1B, in the second to last row, should be referring to UFLS rather than SPS.

No

The VRF for R1 should be Medium because the failure to do so is commensurate with the risks of the other requirements. For example, failing to establish a PSMP for some portion of the entity's components could lead to their maintenance not meeting this standard; this is the same is establishing the PSMP and then not performing the maintenance per the standard.

No

1) M2 incorrectly excludes Distribution Provider. 2) For those components with numerous cycles between on-site audits, retaining and providing evidence of the two most recent distinct maintenance performances and the date of the others should be sufficient. If an entity misses a required maintenance, that results in a self report. We are subject to spot audits and inquiries at any time between on-site audits as well. 3) For those components with cycles exceeding on-site audit interval, retaining and providing evidence of the most recent distinct maintenance performance and the date of the preceding one should be sufficient. Auditors will have reviewed the preceding maintenance record. Retaining these additional records consumes resources with no reliability gain. 4) FAQ II 2B final sentence states that documentation for replaced equipment must be retained to prove the interval of its maintenance. We oppose this because: the replaced equipment is gone and has no impact on BES reliability; and such retention clutters the data base and could cause confusion. For example, it could result in saving lead acid battery load test data beyond the life of its replacement.

No

1) The Lower VSL for all Requirements should begin above 1% of the components. For example for R4: "Entity has failed to complete scheduled program on 1% to 5% of total Protection System components." PRC-005-2 unrealistically mandates perfection without providing technical justification. A basic premise of engineering is to allow for reasonable tolerances, even Six Sigma allows for defects. Requiring perfection may well harm reliability in that valuable resources will be distracted from other duties. 2) In R1, a "Failure to specify whether a component is being addressed by time-based, condition-based, or performance-based maintenance" by itself is a documentation issue and not an equipment maintenance issue. Suggest this warrants only a lower VSL, especially when one of the required components can only be time based. 3) It is possible that a component that failed to be individually identified per R1.1 was included by entity A's maintenance plan. This documentation issue gets a higher VSL than entity B that identified a component without maintaining it. We suggest the R1 VSL be change to Low, since we believe lack of maintenance to be more severe than documentation issues.

No

1) Is this document considered part of the standard? We expect to use it as a reference in developing our PSMP, during audits, and for self-certification as an authentic source of information. It is also unclear how this document will be controlled (i.e. Revised and Approved, if at all). 2) On page 22 please clarify that only applies to high speed ground switches associated with BES elements. 3) We appreciate the SDT providing this valuable reference.

Yes

1) Is this document considered part of the standard? We expect to use it as a reference in developing our PSMP, during audits, and for self-certification as an authentic source of information. It is also unclear how this document will be controlled (i.e. Revised and Approved, if at all). 2) The FAQ needs to be aligned with the tables. The FAQ also contains a duplicate decision tree chart for DC Supply. The FAQ contains a note on the Decision tree that reads, "Note: Physical inspection of the battery is required regardless of level of monitoring used", this statement should be placed on the table itself, and should include the word quarterly to define the inspection period. 3) We appreciate the SDT providing this valuable reference.

1) We commend the SDT for developing a generally clear and well documented second draft. The SDT considered and adopted many industry comments from the first draft. It generally provides a well reasoned and balanced view of Protection System Maintenance, and good justification for its maximum intervals. Ameren generally agrees that this second draft will be beneficial to BES reliability, but several inconsistencies, unclear items, and a couple issues need to be addressed before we will be able to support it. 2) Facilities Section 4.2.1 "or designed to provide protection for the BES" needs to be clarified so that it incorporates the latest Project 2009-17 interpretation. The industry has deliberated and reached a conclusion that provides a meaningful and appropriate border for the transmission Protection System; this needs to be acknowledged in PRC-005-2 and carried forward. 3) We are concerned over R1.1, where all components must be identified, without a definition for the word component or the granularity specified. While the FAQ gives a definition, and allows for entity latitude in determining the granularity, the FAQ is not part of the standard. Certainly this could confuse an entity or an auditor and lead to much wasted work and / or violations for unintended or insignificant issues. We suggest that the FAQ definitions be included within the standard. 4) Implementation of the PSMP must coincide with the beginning of a calendar year. 5) Generating Plant system-connected Station Service transformers should not be included as a Facility because they are serving load. Omit 4.2.5.5 from the standard. There is no difference between a station service transformer and a transformer serving load on the distribution system. This has no impact on the BES, which is defined as the system greater than 100 kV. 6) The term "maintenance correctable

issue" used in Requirement 4 seems to be at odds with the definition given for it. It seems that an issue that cannot be resolved by repair or calibration during the maintenance activity would be a maintenance non-correctable issue. Also, in Requirement 4, the term "identification of the resolution" is ambiguous. Suggested changes for Requirements 4 and 4.1 are: "R4. Each Transmission Owner, Generator Owner, and Distribution Provider shall implement its PSMP, and resolve any performance problems as follows: 4.3 Ensure either that the components are within acceptable parameters at the conclusion of the maintenance activities or initiate actions to replace the component or restore its performance to within acceptable parameters."

Individual

Joe Knight

Great River Energy

No

In Table 1a section-Station DC Supply – 18 calendar months, under Maintenance Activities column, suggest changing under Verify: Battery terminal connection resistance To: Entire battery bank terminal connection resistance (This could have been interpreted as individual batteries) And change: Battery cell-to-cell connection resistance To: Battery cell-to-cell connection resistance, where an external mechanical connection is available. In Table 1a-Station dc supply (that has a component Valve Regulated Lead-Acid batteries) suggest changing Max Maintenance Interval=3 Calendar Years or 3 Calendar Months to 4 Calendar Years or 12 Calendar Months. Our concern is that the insurance companies may push NERC maintenance intervals on all battery banks not associated with the BES. Table 1a-Station dc supply (that has as a component Lead-Acid batteries) Max Maintenance Interval=6 Calendar Years suggest changing to 10 Calendar Years. Reason: performance tests may degrade the battery. Table 1a-Station dc supply (that has as a component Nickel-Cadmium batteries) Max Maintenance Interval=6 Calendar Years suggest changing to 10 Calendar Years. Reason: performance tests may degrade the battery. Table 1b - Level 2 Monitoring Attributes for Component in the row labeled (Control and trip circuitry) we suggest the following change: If a trip circuit comprises multiple paths, at least one of those paths is monitored. Alarming for loss of continuity or dc supply for trip circuits is reported to a location where action can be taken. While all tripping circuits are not completely monitored, the trip coils and the outdoor cable runs are completely monitored. The only portion that would not be monitored is a portion of inter and intra-panel wiring having no moving parts located in a control house. Our company has extremely low failure rate of panel wiring and terminal lugging. I don't think that there is provision for moving control and trip circuitry to performance based maintenance? This control circuitry should be maintained less frequent than un-monitored trip circuits (6 years).

Yes

Yes

Yes

Yes

Yes

Individual

Terry Bowman

Progress Energy Carolinas

No

• The modified definition of "Protection System" (page 2 of the clean version of PRC-005-2) uses the terminology "control circuitry associated with protective functions" whereas Table 1a rows 3-6, Table 1b Rows 3 and 5, and Table 1c Row 4 uses the terminology "control and trip circuits." This is a conflict. "Control" implies that the standard applies to closing/reclosing circuits as well. We do not believe that is the intent. • Row 7 of Table 1a (page 10 of the clean version of PRC-005-2) indicates that proper voltage of the station dc supply must be verified when the associated UVLS or UFLS maintenance is performed. It is not clear whether this requirement is over and above the quarterly and 18-month battery maintenance listed elsewhere in the table or is it the only battery maintenance required for UVLS and UFLS systems? If the intent is to check the station dc supply only when UVLS and UFLS maintenance is performed, the other rows addressing station dc should be revised to exclude UVLS and UFLS. • Row 4 of Table 1b (page 14 of the clean version of PRC-005-2) indicates that remote alarms must be verified every twelve calendar years for control circuitry (trip circuits) (except UFLS/UVLS) provided "Monitoring of Protection System component inputs, outputs, and connections" exists. Clarification should be made to indicate how to monitor inputs. For example, a breaker auxiliary switch is relied upon to

communicate breaker status to a protective relay. If the switch is out of adjustment so that incorrect breaker status is reported to the relay, the relay may not operate when needed. Could proper operation of the auxiliary contacts be credited through in-service operation or the six-year breaker operation maintenance? • The term “calendar years” is used to define the maximum intervals. Does this mean that a six-year PM could go one-day shy of seven years? For example, if a six-year maintenance PM was last performed on 1/1/2010, it would be due on 1/1/2016. Could this allow until 12/31/2016 to complete the maintenance? • Table 1b, Row 14 (Row 2 on page 17): Under the “Level 2 Monitoring Attributes for Component,” UFLS/UVLS should be referenced instead of SPS. • Clarifications need to be made on testing requirements on trip contacts relative to microprocessor vs. EM relays. • There appears to be an inconsistency in the use of “check” vs. “verify” in the tables. • In battery maintenance table, we suggest that “cell/unit” be changed to “cell or unit.”

Yes

No

M2 incorrectly excludes Distribution Provider.

No

In the VSL for R1, a failure to “specify whether a component is being addressed by time-based, condition-based, or performance-based maintenance” by itself is a documentation issue and not an equipment maintenance issue. Suggest this warrants only a lower VSL, especially when one of the required components can only be time based.

Yes

No

FAQ II.2.A: What degree of testing is required for a relay firmware upgrade? Complete commissioning tests? FAQ V.1.A. There appears to be a typo in Example #1 for “Vented lead-acid battery with low voltage alarm connected to SCADA (level 2)”: Table 1b does not list any level 2 requirements. Rather, the table refers reader back to the Level 1 requirements. Same comment for Example #2 as well. FAQ III.1.A: Project 2009-17 provides a response to a request for interpretation of the term “transmission Protection System” as related to PRC-004-1 and PRC-005-1. The interpretation addresses the boundaries of the transmission system. NERC should investigate whether this same boundary should be defined within the new PRC-005-2. Also, numerous potential boundary issues exist between entities which should be contemplated and addressed. See the examples below: • Utility A may own equipment in Utility B’s substation. Utility A contracts Utility B to perform maintenance on their equipment. However, the two utilities have different maintenance programs and intervals for the same types of equipment. Who is responsible for NERC compliance? Would Utility A be found in violation because their equipment is being maintained under Utility B’s program which deviates from Utility A’s maintenance basis? • EMC protection is fed from a utility’s instrument transformers. Who is responsible for validation of the relay inputs and testing of the instrument transformers? • Utility-owned communication units (used for transfer trip or carrier blocking) are coupled to the utility’s power line using customer-owned CCVTs. Who is responsible for maintenance and testing of these CCVTs? • Utility A owns all equipment at one end of line (line terminal A) and Utility B owns all equipment at other end of line (line terminal B). Who is responsible for demonstrating the carrier blocking scheme or POTT scheme works correctly?

• R1.1.1 states that “all” protection system components be identified. Does the term “all” refer to the major components identified in the Protection System definition (protective relays, communication systems, voltage and current sensing devices, station dc supply, and control circuitry) or does it include all sub-components (jumpers, fuses, and auxiliary relays used in dc control circuits and communication paths/wavetraps/tuners/filters)? We assume the former but request clarification. • Draft Implementation Plan for PRC-005-02: The phased implementation plan for R2, R3, and R4 seems reasonable. However, the three-month implementation plan for R1 seems extremely short. Utilities will have to change procedures, job plans, basis documents, provide training, and change intervals in their work tracking databases. In addition, if the utility wants to take advantage of the longer intervals allowed by partial monitoring, significant print work must be performed up front. • Descriptors in the type of the protection system column needs to be consistent between 1A, 1B and 1C. In the tables, please clarify “complete functional trip test” for UVLS and UVLS trip tests since the breaker is not being tripped.

Group

Pepco Holdings, Inc. - Affiliates

Richard Kafka

Pepco Holdings, Inc.

There were numerous comments submitted for Draft 1 indicating that the 3 month interval for verifying unmonitored communication systems was much too short. The SDT declined to change the interval and in their response stated: The 3 month intervals are for unmonitored equipment and are based on experience of the relaying industry represented by the SDT, the SPCTF and

review of IEEE PSRC work. Relay communications using power line carrier or leased audio tone circuits are prone to channel failures and are proven to be less reliable than protective relays. Statistics on the causes of BES protective system misoperations, however, do not support this assertion. The PJM Relay Subcommittee has been tracking 230kV and above protective system misoperations on the PJM system for many years. For the six year period from 2002 to 2007, the number of protective system misoperations due to communication system problems were lower (and in many cases significantly lower) than those caused by defective relays, in every year but one. Similarly, RFC has conducted an analysis of BES protection system misoperations for 2008 and 2009, and found the number of misoperations caused by communication system problems to be in line with the number attributed to relay related problems. If unmonitored protective relays have a 6 year maximum maintenance/inspection interval, it does not seem reasonable to require the associated communication system to be inspected 24 times more frequently, particularly when relay failures are statistically more likely to cause protective system misoperations. As such, a 12 or 18 calendar month interval for inspection of unmonitored communication systems would seem to be more appropriate. FAQ II 6 B states that the concept should be that the entity verify that the communication equipment...is operable through a cursory inspection and site visit. However, unlike FSK schemes where channel integrity can easily be verified by the presence of a guard signal, ON-OFF carrier schemes would require a check-back or loop-back test be initiated to verify channel integrity. If the carrier set was not equipped with this feature, verification would require personnel to be dispatched to each terminal to perform these manual checks. The phrase “Verify Battery cell-to-cell connection resistance” has entered the table where it did not exist before. On some types of stationary battery units, this internal connection is inaccessible. On other types the connections are accessible, but there is no way to repair them based on a bad reading. And bad cell-to-cell connections within units will be detected by the other required tests. This requirement will cause entities to scrap perfectly good batteries just so this test can be performed, with no corresponding increase in bulk electric system reliability while taking an unnecessary risk to personnel and the environment.

No

An explanation is needed to justify why the VRF for R1 of the PSMP is High whereas the implementing and following of the PSMP is Medium, R2, R3 & R4.

No

The present wording regarding data retention states - The Transmission Owner, Generator Owner, and Distribution Provider shall each retain documentation of the two most recent performances of each distinct maintenance activity for the Protection System components, or to the previous on-site audit date, whichever is longer. This wording was changed by the SDT following comments received from Draft 1. However, the present wording is somewhat confusing. It is assumed that the intent of the SDT was to require documentation be retained for the two most recent performances of each distinct maintenance activity, regardless of when they occurred (i.e., whether prior to, or since the last audit), since the phrase whichever is longer was used. In addition, for those activities requiring short maintenance intervals (such as battery inspections), records must be kept for all performances (not just the last two) that have taken place since the last on-site audit. For example: Assume a PSMP with a 6 year interval for relay maintenance and 3 month interval for battery inspections. At a particular station assume the batteries have been inspected every 3 months; the relays were last inspected 5 years ago, and before that 11 years ago. The last audit was 2 years ago. Records from each 3 month battery inspection going back to the last audit needs to be retained. Also, both relay maintenance records from 5 and 11 years ago needs to be retained, despite the fact that this interval should have been reviewed during the last audit. Documentation from the 11 year ago activity can be discarded when the relays are next maintained. Is this what the SDT intended? If so, the requirement should be re-worded to better explain the intent. Also, examples should be included in either the FAQ or Supplemental Reference to demonstrate what is expected.

No

It is possible that a component that failed to be individually identified per R1.1 was included by entity A’s maintenance plan. This documentation issue gets a higher VSL than entity B that identified a component without maintaining it. We suggest the R1 VSL be change to Low, since we believe lack of maintenance to be more severe than documentation issues.

No

Figure 1 & 2 Legend (page 29), Row 5, Associated Communications Systems, includes Tele-protection equipment used to convey remote tripping action to a local trip coil or blocking signal to the trip logic (if applicable). This description does not include all the various types of signals communicated for proper operation of various protective schemes (i.e., DUTT, POTT, DCB, Current Differential, Phase Comparison, synchro-phasors, etc.) A more inclusive and generic description might be – Tele-protection equipment used to convey specific information, in the form of analog or digital signals, necessary for the correct operation of protective functions. This is also consistent with the revised definition of Protection System. Conversely, excluded equipment would be - Any communications equipment that is not used to convey information necessary for the correct operation of protective functions.

No

The three month inspection interval for communication equipment mentioned in FAQ II 6 B should be extended to 12 – 18 months (see response to Question #1). In addition, the example used in this section should address what is expected for ON-OFF carrier systems. Checking that the equipment is free from alarms and still powered up does not seem sufficient to verify functionality. The FAQ states that the concept should be that the entity verify that the communication equipment...is operable through a cursory inspection and site visit. However, unlike FSK schemes where channel integrity can easily be verified by the presence of a guard signal, ON-OFF carrier schemes would require a check-back or loop-back test be initiated to verify channel integrity. If the carrier set was not equipped with this feature, verification would require personnel to be dispatched to each terminal to perform these manual checks.

Dates of the Supplemental Reference Documents in Section F of the standard need to be updated. The word “calendar” is used widely to define month and year intervals. Sometimes causes confusion, need definition/examples. The level 2 table regarding Protection Station dc supply states that level 1 maintenance activities are to be used, but then goes on to give a list of Maintenance Activities that don’t match those in level 1. Which activities shall we use? Same situation for Station DC Supply (battery is not used) where the 18 month interval is missing. Req 1.1: “All Components” wording should say something like all components covered in our plan

Individual

Martin Bauer

US Bureau of Reclamation

No

There is no reliability based justification to alter the standards to include allowable intervals. The intervals prescription for performance based PSMP virtually eliminates the capability of smaller utilities who do not have a large equipment database to justify a performance based system that may be sound based on their experience. This overly prescriptive approach should be eliminated and return to allowing utilities to justify their programs. The standard should return to addressing real reliability impacts as required by law. This would be to develop a maintenance required which identifies that if it is shown that an event in which reliability is impacted by the utilities PSMP, as evidenced by disturbance reports, the utility would be required to submit to the RRO a corrective action plan which addresses how the PSMP will be revised and when compliance with that PSMP is to be achieved. Finally, the standard presumes that components within a BES Element will cause a reliability impact to the BES. In numerous meeting with NERC and WECC it was emphasized that a reliability impact has been described as causing cascading outages or causing loss of service to load above a certain magnitude. The BES has an ability to absorb element outages resulting from a variety of causes without impact load or resulting in cascading outages.

No

The Time Horizons are too narrow for the implementation of the standard as written. The SDT appears to have not accounted for the data analysis associated with performance based systems. The data collection, analysis, and subsequent decisions associated development of a maintenance program and its justification do not occur overnight especially with larger utilities. In addition, this new standard will require complete rewrite of maintenance programs. The internal processes associated with these vary based on the size of the utility. Since this standard is so invasive into the internal decisions concerning maintenance, the standard should allow at least 18 months for entities to rewrite their internal maintenance programs to meet the requirements and 18 months to train the staff and implement the new program.

No

The measures M2, M3, and M4 are redundant to measure M1. Either eliminate M1 or M2 through M4. The entity must provide documentation of its maintenance program in M1 irrespective of the type used. As previsously mentioned there is not reliability based justification for the documentation required. The Entity should be afforded the freedom to make intelligent maintenance choices based on inumberable factors. These choices will be reviewed if a reliability impact is determined to be related to the choices.

No

The VSL's use terms that are not tied back to a requirement and appear to be based on the concept that every component will cause an impact on the BES. The VSL's use the term "coutable event" to score the VSL; hoever, there is no requirement associated with the number of "countable events". The VSL's should allow for minor gaps in maintennace documentation where there is no impact to the BES if the component failed.

No

It is not reasonable to assert that a statistical analysis of survey data is a reliability based justification for requiring specific maintenance intervals. The reference document admits that intervals varied widely. To assert a postage stamp interval does not account for other variables which optimize a specific maintenance program. That is not say that the reference documents is worthless. Indeed it has many good suggestions. However, to impugn the maintenance programs

in practice because they do not follow the "weighted average" is hardly scientific or credible. The reference document should analyze the maintenance programs from the stand point of the outages associated with those facilities. If a specific maintenance practice was shown to have compromised the performance of the facility and the reliability of the BES, then it would added to the statistical database of practices which would not be acceptable. Now the statistical analysis of the database would show that certain practices have consequences which impact reliability and a requirement can be constructed to disallow them.

The sub-requirements for R1, are not criteria, rather implementation requirements more suitable to be included in R4. Examples of what the PSMP shall address which would be more consistent with the language in R1 would be: How are changes to the PSMP administered? Who approves the determination of the use of time-based, condition based or performance based maintenance. Who reviews activities under the PSMP References used within the standard are not consistent. In R1.2 Attachment as is referred to as Attachment A. In R3 Attachment A is referred to as PRC-005 Attachment A. This implies a difference. Under a voluntary world, we could draft criteria and procedures with this problems and interpret them correctly. Today in the compliance world, the language must be precise and unambiguous. The reference must be the same it means something different. The requirement in R1, which is consistent with the purpose, does not support the applicability in R4.2.5.4. Protection systems associated with stations service are not designed to provide protection for the BES. In particular we have been told that intent was not to look at every device that tripped the generator but devises that sensed problems on the BES and trip the generator. Hence we include such things as frequency relays, Differential relays, zone relays, over current, and under voltage relays. Even a loss of field looks at the system as included. Speed sensing devices were explicitly excluded. As such, if the stations service transformer protection looks toward the BES (e.g. differential relays and zone relays) they would be included. Over current would not as it would be on the station side. If a Station Service transformer saw excess current, the system would in most cases fail over to other side. If not, it would cause the generator to trip much like a generator thermal device which is also excluded. Maintenance programs offer a unique problem to the FERC and regulatory world. The knee jerk reaction is to define them. What happens if the solution is bad, who will accept the consequences that narrow prescription was wrong and the interval caused a reliability impact. It would no longer be the Entity. History is replete with examples of this type of micro managing. Rather than fall into the same trap, and suffer the consequences of the unknown, allow Entities to optimize their programs to ensure reliability of the BES and create a standard of disallowed practices which have a demonstrated impact on reliability.

Group

NERC Staff

Mallory Huggins

NERC

Yes

Yes

Make sure that the use of verbs like “shall,” “should,” and “will” is consistent across Requirements and Measures. In these four measures, all three verbs are used, and they should be made uniform to avoid misinterpretation.

Yes

Yes

NERC staff is pleased with the current iteration of this standard. The staff understands that while PRC-005-2 has historically been the most frequently violated standard, it has mostly been due to documentation issues. The standard has not been much of a heavy hitter in causal or contributive aspects, and with respect to relay operations, there have been very few times that lack of maintenance has been the problem. NERC staff does propose a slight change to 4.2.5.1. The concern is that 4.2.5.1 could be interpreted to apply to devices that protect the generator as opposed to those that protect the Bulk Electric System. The suggested language is as follows: “Protection System components that act to trip generators that are part of the BES, either directly or via generator lockout or auxiliary tripping relays.” Additionally, staff suggests some changes to R1. In that requirement, the PSMP covers “Protection Systems that use measurements of voltage, current, frequency and/or phase angle to determine anomalies and to trip a portion of the BES…” It probably would be better if the list was limited to voltage and current or if the list was replaced with electrical quantities. The former would be okay since voltage and current are the only two electrical quantities that relays measure directly. To remove

ambiguity, the most inclusive way to rephrase this is probably the latter alternative, to change the requirement to, "…that use measurements of electrical quantities to determine anomalies…" Finally, Footnotes 2 and 3 (in Requirement 4) are identical. Unless that's intentional, one should be removed. (And note that Footnote 2 is missing a period.)

Individual or group. (50 Responses)
Name (31 Responses)
Organization (31 Responses)
Group Name (19 Responses)
Lead Contact (19 Responses)
Contact Organization (19 Responses)
Question 1 (50 Responses)
Question 1 Comments (50 Responses)
Question 2 (47 Responses)
Question 2 Comments (50 Responses)

Group
Northeast Power Coordinating Council
Guy Zito
Northeast Power Coordinating Council
No
Suggest adding “Protection System Components including” in the beginning. This is because the word “components” has been used extensively throughout the standard and there is no mention of what constitutes a protection system component in the standard. The word “component” does find mention in FAQs, however, it is recommended to mention it in the body of the standard. The revised definition should read as follows: Protection System Components including Protective relays, communication systems necessary for correct operation of protective functions, voltage and current sensing devices providing inputs to protective relays and associated circuitry from the voltage and current sensing devices, station dc supply, and control circuitry associated with protective functions from the station dc supply through the trip coil(s) of the circuit breakers or other interrupting devices. An alternative definition for Protection System to eliminate the need to capitalize “component”: The collective components comprised of protective relays, communication systems necessary for correct operation of protective functions, voltage and current sensing devices providing inputs to protective relays and associated circuitry from the voltage and current sensing devices, station dc supply, and control circuitry associated with protective functions from the station dc supply through the trip coil(s) of the circuit breakers or other interrupting devices. There is not enough clarity on whether a Distribution Provider (DP) will be able to clearly identify which protection system components it does own and needs to maintain. Many DPs own and/or operate equipment identified in the existing or proposed definition. However, not all such equipment translates into a transmission Protection System. The definition needs clarification on when such equipment is a part of the transmission protection system. This is critical since NPCC had proposed a SAR to this effect which was not accepted by NERC citing that this concern will be incorporated in the revised standard. Also, reference should be made to Project 2009-17 in which Y-W Electric Association, Inc. (Y-WEA) and Tri-State Generation and Transmission Association, Inc. (Tri-State) requested an interpretation of the term "transmission Protection System" and specifically whether protection for a radially-connected transformer protection system energized from the BES is considered a transmission Protection System and is subject to these standards.
No
The time provided for the first phase “at least six months” is too open ended and does not give entities a clear timeline. Suggest 1 year for the first phase. Suggest phasing out the second phase in stages.
Group
SERC Protection and Control Sub-committee (PCS)
Joe Spencer - SERC staff and Phil Winston - PCS co-chair
SERC Reliability Corp.
Yes

We agree that the definition provides clarity and will enhance the reliability of the Protection Systems to which it is applicable; however, we believe there should be a direct linkage of the definition's effective date to the approval and implementation schedule of PRC-005-2. Since this new definition is directly linked to the proposed revised standard, it would be premature to make this definition effective prior to the effective date of the new standard.

No

As noted above, the implementation plan should be linked to the approval of PRC-005-2. Since this new definition is directly linked to the proposed revised standard, it would be premature to make this definition effective prior to the effective date of the new standard.

Individual

Jack Stamper

Clark Public Utilities

Yes

No

While the drafting team has done a great job of simplifying the implementation plan from the original draft 1 language, the current language has some ambiguities. I do not understand what the term "the end of the first calendar quarter six months following regulatory approvals" means. What is wrong with just saying "within nine months (or six months or twelve months) following regulatory approvals? Using the current language I would be inclined to assume it is six months so I can avoid a dispute (and quite possibly a notice of alleged violation) over a date. Also, I am not sure what the term "the end of the first complete maintenance and testing cycle described in the entity's program description" means. It is quite likely that a registered entity will make the required definition change to its maintenance program (at approximately six months) and wind up with devices that need to be tested. Is the implementation plan attempting to provide some allowed time delay so the registered entity will not be out of compliance even though it has devices that are now beyond the maximum testing interval due to the definition change? The existing language implies that within approximately six months of regulatory approval, the maintenance program needs to be changed to incorporate the revised definition for Protection System. However, the effective date for the revised maintenance program is going to be some date that corresponds with the end of the first complete maintenance and testing cycle in that program. I really don't understand what that time period is and I believe the drafting team needs to put in something that clears up this confusion. By testing cycle do you mean "maximum interval" as shown in the PRC-005 table? Do you mean the "maximum interval" that a registered entity includes in their maintenance program? If so, do you intend the implementation to be a different date for protection devices depending on the maximum testing interval? Or do you envision some date beyond the six months where the entire maintenance program (with the definition change) becomes effective and any registered entities with out-of-compliance issues would need to file mitigation plans?

Individual

Dan Roethemeyer

Dynegy Inc.

Yes

Yes

Individual

Robert Ganley

Long Island Power Authority

No

LIPA suggests adding "Protection System Components including" in the beginning. This is because the word "components" has been used extensively throughout the standard and there is no mention of what constitutes a protection system component in the standard. The word "component" does find mention in FAQs, however, it is recommended to mention it in the main standard. Also, LIPA proposes a change in the proposed definition (changing "voltage and current sensing inputs" to "voltage and current sensing devices providing inputs"). The revised definition should read as follows: Protective System Components including Protective relays, communication systems necessary for correct operation of protective functions, voltage and current sensing devices providing inputs to protective relays and associated circuitry from the voltage and current sensing devices, station dc supply, and control circuitry associated with protective functions from the station dc supply through the trip coil(s) of the circuit breakers or other interrupting devices. There is not enough clarity on whether a Distribution Provider (DP) will be able to clearly identify all protection system components it owns and needs to maintain. This is critical since NPCC had proposed a SAR to this effect which was not accepted by NERC citing that this concern will be incorporated in the revised standard.

No
The time provided for the first phase “at least six months” is too open ended and does not give entities a clear timeline. LIPA suggests 1 year for the first phase. It is also suggested phasing out the second phase in stages.
Group
PacifiCorp
Sandra Shaffer
PacifiCorp
Yes
Yes
Group
Pacific Northwest Small Public Power Utility Comment Group
Steve Alexanderson
Central Lincoln
No
It is still unclear whether relays that respond to mechanical inputs, such as sudden pressure relays, are included in the proposed definition as protective relays. While PRC-005-2 R1 limits the scope of that particular standard to protection systems that sense electrical quantities, it is remains unclear in other standards that use the defined term whether mechanical input protections are included. We suggest that “Protective Relay” also be defined, and that the definition clearly exclude devices that respond to mechanical inputs in line with the NERC interpretation of PRC-005-1 in response to the CMPWG request.
Yes
Group
PNGC Power
Margaret Ryan
PNGC Power
No
It is still unclear whether relays that respond to mechanical inputs, such as sudden pressure relays, are included in the proposed definition as protective relays. While PRC-005-2 R1 limits the scope of that particular standard to protection systems that sense electrical quantities, it is remains unclear in other standards that use the defined term whether mechanical input protections are included. We suggest that “Protective Relay” also be defined, and that the definition clearly exclude devices that respond to mechanical inputs in line with the NERC interpretation of PRC-005-1 in response to the CMPWG request.
Yes
Group
Southern Company Transmission
JT Wood
Southern Company
Yes
We agree that the definition provides clarity and will enhance the reliability of the Protection Systems to which it is applicable. However, we feel that there needs to be a direct linkage of the definition’s effective date to the approval and implementation schedule of PRC-005-2. Since this new definition is directly linked to the proposed revised standard, it would be premature to make this definition effective prior to the effective date of the new standard.
No
The revised definition should not be made effective until the revised PRC-005-2 is in effect. There is no definite reliability benefit to balloting this definition prior to the revised standard. If balloted and approved, entities would definitely have to modify their Protection System Maintenance and Testing Program methodology, but there is no obligation to or guarantee of any additional maintenance being performed. PRC-005-2 includes this definition, the maintenance activities, and the intervals that will ensure execution of the maintenance and testing.
Individual
Lauri Dayton
Grant County PUD
No

1) We note that the definition of a “Protection System” has been expanded to include the trip coils and what used to be confined to batteries has now been expanded to “station DC supply.” “Trip coils” is an improvement. Inasmuch as the mark-up changing “DC” to “dc” is intended to communicate a more general term as opposed to a strict definition, it leaves room for differing opinions among auditors as to what all should be included. We support the change to exclude battery chargers since the rationale for their inclusion was never clear. The battery itself will be, without exception, the “first responder” to provide DC power to a Protection System. However, battery chargers have not been excluded under the FAQs. 2) The SPCTF’s effort to define applicability in terms of “Facilities” is confusing. Additionally, it is unclear how the terms “component,” “element” and “Facility” are intended to relate to one another. An assumption may be that one or more components (which are physical assets) can comprise an “element,” one or more of which can be associated with an identifiable function, aligning with the five Protection System Equipment Categories, found in SPCTF’s “PROTECTION SYSTEM MAINTENANCE—A Technical Reference, dated Sept. 13, 2007, and that “Facility” is as used in 4.2.1 of the Standard Development Roadmap, dated May 27, 2010. Please provide guidance on the terms relate to one another. 3) The structure of the proposed standard is less clear than the existing standard PRC-005-1 because of the potential for ambiguity between the definition of Protection System and how the term “Facilities” is applied. A suggested resolution would be to revise the definition of Protection System to resolve this ambiguity or to delete reference to 86 lockouts and auxiliary relays in the description of “Facilities.” If the 86 lockout relays are to be included, they should be added as part of the DC Control Circuitry “element” (as found in the NERC Glossary) of the circuit that energizes the 86 relay, thus placing it within the definition of a “Protection System.”—once—and therefore in a manner that would require only one scheduled maintenance to be performed if the testing schemes are properly set up. We do agree, however, that sudden pressure relays, reclosing relays, and other non fault detecting relays such as loss of cooling relays should not be referenced as part of the “dc control circuitry” Element.

No

There needs to be more clarity concerning the role of the 3 year audit during the implementation phase. Do the audit tests consist of varying proportions of -1 criteria and -2 criteria?

Individual

Fred Shelby

MEAG Power

Yes

Yes

Individual

James A. Ziebarth

Y-W Electric Association, Inc

No

The application of this definition to Reliability Standards NUC-001-2, PER-005-1, PRC-001-1, and PRC-004-1 results in confusion as to whether relays with mechanical inputs are included or excluded from this definition. PRC-005-2_R1 contains language limiting its applicability to relays operating on electrical inputs only, but the remaining standards that rely on this definition are not so specific. This being the case, it would make much more sense to clearly define what devices are actually meant in the glossary definition rather than leaving it up to each individual standard to do so.

Yes

Individual

Armin Klusman

CenterPoint Energy

No

CenterPoint Energy believes the proposed definition of “Protection System” is technically incorrect. The present definition does not include trip coils of interrupting devices, such as circuit breakers; and correctly so, as trip coils are components of the interrupting device. A Protection System has correctly performed its function if it provides tripping voltage up to the circuit breaker trip coil. From that point, the circuit breaker can fail to timely interrupt fault current due to several factors, such as a binding mechanism that affects breaker clearing time, a broken pull rod, a bad insulating medium, or bad trip coils. Local breaker failure protection, or remote backup protection, is installed to address the various possible causes of circuit breaker failure. For correctness, the definition of “Protection System” should be “Protective relays, communication systems necessary for correct operation of protective functions, voltage and current sensing inputs to protective relays and associated circuitry from the voltage and current sensing devices, station dc supply, and control circuitry associated with protective functions from

the station dc supply UP TO THE TERMINALS OF the trip coil(s) of the circuit breakers or other interrupting devices."
Individual
Andrew Z.Pusztai
American Transmission Company
Yes
No
ATC does not agree to the implementation plan proposed. While it makes common sense to proceed with R1 prior to proceeding with implementing R2, R3, and R4, the timeline to be compliant for R1 is too short. It will take a considerable amount of resources to migrate the maintenance plan from today's standard to the new standard in phase one. ATC recommends that time to develop and update the revised program be increased to at least one year followed by a transition time for the entity to collect all the necessary field data for the protection system within its first full cycle of testing. (In ATC's case would be 6 years) To address phase two, ATC believes human and technological resources will be overburdened to implement this revised standard as written. The transition to implementing the new program will take another full testing cycle once the program has been updated. Increased documentation and obtaining additional resources to accomplish this will be challenging. Implementation of PRC-005-2 will impact ATC in the following manner: a. Increase costs: double existing maintenance costs. b. Since there will be a doubling of human interaction (or more), it is expected that failures due to human error will increase, possibly proportionately. c. Breaker maintenance may need to be aligned with protection scheme testing, which will always contain elements that are include in the non-monitored table for 6 yr testing. d. ATC is developing standards for redundant bus and transformer protection schemes. This would allow ATC to test the protection packages without taking the equipment out of service. Further if one system fails, there is full redundancy available. With the current version of PRC-005-2, ATC would need to take an outage to test the protection schemes for a transformer or a bus, there is not an incentive to install redundant schemes. ATC is working with a condition based breaker maintenance program. This program's value would be greatly diminished under PRC-005-2 as currently written. Consideration also needs to be given for other NERC standards expected to be passed and in the implementation stage at the same time, such as the CIP standards.
Individual
Eric Ruskamp
Lincoln Electric System
No
LES believes the proposed definition of Protection System as written remains open to interpretation. LES offers the following Protection System definition for the SDT's consideration: "Protection System" is defined as: A system that uses measurements of voltage, current, frequency and/or phase angle to determine anomalies and trips a portion of the BES and consists of 1) Protective relays, and associated auxiliary relays, that initiate trip signals to trip coils, 2) associated communications channels, 3) current and voltage transformers supplying protective relay inputs, 4) dc station supply, excluding battery chargers, and 5) dc control trip path circuitry to the trip coils of BES connected breakers, or equivalent interrupting device, and lockout relays.
Yes
Group
E.ON U.S.
Brent Inebrigtson
E.ON U.S.
Yes
No
The first phase is only 3 months (per Implementation Plan) to update the program, not the 6 months as listed in this question. E.ON U.S. recommends that it should be a minimum of 6 months, regardless.
Individual
Kasia Mihalchuk
Manitoba Hydro
Yes
No

The proposed implementation stage of 6 months is much too stringent and an 18 month window is suggested.
Individual
Edward Davis
Entergy Services
Yes
No
We agree with the definition, however we do not agree with the implementation plan. We believe implementation of the definition needs to coincide with the implementation of Standard PRC-005-2. To do otherwise, will cause entities to address equipment, documentation, work management process, and employee training changes needed for compliance twice within an unreasonably short timeframe. Additional time, 12 months minimum, will be needed to fully assess and address the necessary maintenance program documentation changes, maintenance system tool revisions, and personnel training needed to incorporate this new definition into our program.
Individual
James Sharpe
South Carolina Electric and Gas
Yes
The new definition effective date should be directly linked to the approval and implementation schedule of PRC-005-2 to avoid any possible compliance issues under the current PRC-005 standard.
Yes
Individual
Jon Kapitz
Xcel Energy
No
We recommend modifying the language to remove circuit breakers altogether: "…through the trip coil(s) of the circuit breakers or other interrupting devices."
No
The implementation plans for both the definition and standard are confusing. Does this imply a "clean slate" approach can be used? i.e. do entities have up to the first interval window to complete the maintenanceor must they have it complete on day 1 of the standard and again by the first interval? It also appears that the implmentation plans are conflicting whereby one requires full compliance and the other allows 6 months...the definition implmeentation plan also refer to a basis document though the standard does not require one.
Group
Bonneville Power Administration
Denise Koehn
BPA, Transmission Reliability Program
Yes
Yes
Individual
Scott Kinney
Avista Corp
No
The modified definition of Protection System now refers to "functions" rather than "devices." What are the "functions?" This new term adds confusion without being defined in the standard.
Yes
Individual
Amir Hammad
Constellation Power Generation
No
Constellation believes that this definition is to verbose, which can lead to unintended interpretations. Constellation is concerned with the term sensing inputs, which may infer that

testing on instrument transformers must be completed while they are energized. This proves difficult at a generating facility where most testing is completed during planned outages when this equipment is not energized.
No
This does not match the implementation proposed for PRC-005-2. The implementation plan for revising the program is 6 months based on the “definition implementation” but R1 in PRC-005-2 has a 3 month implementation plan.
Individual
Jeff Nelson
Springfield Utility Board
Yes
Yes
Group
Western Area Power Administration
Brandy A. Dunn
Western Area Power Administration - Corporate Services Office
Yes
Yes
Group
WECC
Tom Schneider
Western Electricity Coordinating Council
Yes
Compliance agrees only if the original “Protection System” definition is in place for the interim implementation period, so that only the changes and or additions to the “Protection System” definition are covered under the proposed implementation plan.
Individual
Michael R. Lombardi
Northeast Utilities
Yes
No
The time provided for the first phase “at least six months” is too open ended and does not give entities a clear timeline. Northeast Utilities suggests 1 year for the first phase.
Group
Arizona Public Service Company
Jana Van Ness, Director Regulatory Compliance
Arizona Public Service Company
No
The change to the definition relative to the voltage and current sensing devices is too prescriptive. Methods of determining the integrity of the voltage and current inputs into the relays to ensure reliability of the devices should be up to the discretion of the utility.
Yes
Individual
John Bee
Exelon
Yes
No
PECO would like to have the implementation plan provide at least 1 year for full implementation of the new standard. This will provide adequate time for development of documentation, training for all personnel, and testing then implementation of the new process (es).
Individual

Barb Kedrowski
We Energies
Yes
No
Wisconsin Electric does not agree with the six-month implementation requirement in the first phase. It is our position that a longer adjustment time is needed for entities to update their maintenance programs to implement the new definition. The new definition results in a significant increase in the scope of affected equipment and the documentation required to implement the program, and requires additional resources beyond present levels, including hiring and training. We estimate that this effort will require three years to fully implement.
Group
FirstEnergy
Sam Ciccone
FirstEnergy Corp.
Yes
The definition is ready for ballot with the addition of auxiliary relays to the definition of protective relays. There is a potential for an entity to determine that auxiliary relays do not perform a protection function since they typically do not sense fault current. Furthermore, one could determine that the term "circuitry" only refers to the wiring to connect the various DC devices together. We suggest adding "auxiliary relays necessary for correct operation of protective devices" to improve clarity of the definition. With regard to the change from the current definition phrase "station batteries" to the new definitions phrase "station DC supply", it may not be clear to the reader that this includes battery chargers. To alleviate future interpretation issues, we suggest adding a clarifying statement at the end of the definition, such as "The station DC supply includes the battery, battery charger, and other DC components". The acronym "dc" should be capitalized.
Yes
Individual
Jianmei Chai
Consumers Energy Company
No
1. It is unclear whether “voltage and current sensing inputs” include the instrument transformer itself, or does it pertain to only the circuitry and input to the protective relays? 2. It is not clear what is included in the component, “station dc supply” without referring to other documents (the posted Supplementary Reference and/or FAQ) for clarification. The definition should be sufficiently detailed to be clear. 3. If Protection Systems trip via AC methods, are those systems, and the associated control circuitry included?
No
For entities that may not have included all elements reflected in the modified definition within their PRC-005-1 program, 6-months following regulatory approvals may not be sufficient to identify all relevant additional components, develop maintenance procedures, develop maintenance and testing intervals, develop a defendable technical basis for both the procedures and intervals, and train personnel on the newly implemented items. We propose that a 12-month schedule following regulatory approvals may be more practical.
Group
Santee Cooper
Terry L. Blackwell
SC Public Service Authority
Yes
We agree with the proposed definition. However, the effective date of this definition should be linked to the implementation schedule of PRC-005-2. This definition should not be made effective prior to the new standard.
No
The implementation plan should be linked to the approval of PRC-005-2. The definition should not be made effective prior to the new standard.
Individual
Art Buanno
ReliabilityFirst Corp.
Yes
The definition should probably include interrupting devices as the Protection System is of little

value if the fault cannot be interrupted.

Yes

Group

Florida Municipal Power Agency

Frank Gaffney

Florida Municipal Power Agency

Yes

Because the definition changes the scope of what a protection system covers, increasing that scope, the definition should not be balloted separately from PRC-005-2 so that the industry knows what is being committed to. For instance, the circuitry connecting the voltage and current sensing devices to the relays is a scope expansion. station DC supply increases the scope to include the charger, etc. This scope increase needs to have an appropriate implementation period.

No

As stated in response to Question 1, it is inappropriate to change the definition o Protection System for PRC-005-1 and the new definition should wait for the new standard. In all honesty, the new PRC-005-2 lays out the program anyway, so, any change to the definition needs to be accompanied by a the commitment associated with that change.

Individual

Greg Rowland

Duke Energy

No

It is unclear whether the revised definition includes PTs and CTs, but it does include the wiring. We don't see a way to list the wiring in R1.1 and provide supporting compliance evidence. We believe the phrase "and associated circuitry from the voltage and current sensing devices" should be struck from the definition.

No

Definition should be implemented concurrently with PRC-005-2.

Group

Public Service Enterprise Group ("PSEG Companies")

Kenneth D. Brown

Public Service Electric and Gas Company

No

Based on review of ballot pool comments there are still too many questions that should be resolved prior to submittal for ballot. It is suggested that a specific reference to the supplementary reference document figures 1 & 2 and the legend be added. That would further define the protection system components and scope boundary.

No

- The draft implementation plan general considerations have a requirement to identify all the protection system components addressed under PRC-005-1 and PRC-005-2 for potential audits while modifying the existing programs. The standard revision will require extensive reviews and possibly add significant amounts of components to the program. This is listed as a requirement without a specific deadline other than supplying the information as part of an audit. If an audit is scheduled or announced early in the implementation period the evidence is required. The requirement for identifying all the components in the implementation process should have a time specified with bases for the starting point. - Where additional definition of a protection system scope boundary is determined as a result of the standard revisions, the implementation plan completion requirement should be at the end of next maintenance interval of that added protection system component. There may be situations where additional scope as determined by the additions or revisions to the standard and/or supporting reference material (e.g., an auxiliary contact input in a tripping scheme) would require going back and taking equipment out of service to perform that one check. To keep the maintenance and outage schedules coordinated the new requirements should be at the end of current cycles, not beginning.

Group

The Detroit Edison Company

Daniel Herring

NERC Compliance

No

The definition should clarify whether current and voltage transformers themselves are included.

No

This implementation plan and the one for PRC-005-2 should be consistent.

Individual
Thad Ness
American Electric Power
No
The term "station" should either be defined or removed from the definition, as it implies transmission and distribution assets while the term "plant" is used to define generation assets. It would suffice to simply refer to the "DC Supply".
No
As written, the implementation plan only specifies a time frame for entities to update their documentation for PRC-005-1 and PRC-005-2 compliance. The implementation plan also needs to give entities a time frame to address any required changes to their documentation for other standards that use the term "Protection System", including but not limited to NUC-001-2, PER-005-1, PRC-001-1, etc.
Individual
Rex Roehl
Indeck Energy Services
No
It presumes that all relays in a plant are Protective Systems that affect BES reliability. As discussed at the FERC Technical Conference on Standards Development, the goal of the standards program is to avoid or prevent cascading outages--specifically not loss of load. The purpose of PRC-005-2 uses the term in its global sense but there is no subset of the Protection Systems that affect reliability. PRC-005 R1 requires identification of all components. With the broad definition proposed, and no separate term for only relays and other components that have been identified as affecting reliability, confusion results. If this term has its global meaning, then another term, such as Reliability Protection Systems, should be instituted to avoid confusion.
No
The definition should not be implemented separate from PRC-002-2. The PRC-002-2 implementation plan would be adequate.
Individual
Claudiu Cadar
GDS Associates
No
- The inserted wording “and associated circuitry from the voltage and current sensing devices” implies that the maintenance program will include the verification, monitoring, etc. of the wiring from the voltage/current sensing devices which requirement will be a bit excessive under current presentation of the standard. See comment on the standard as well. - SDT’s additional wording such as “from the station DC supply through the trip coil(s) of the circuit breakers or other interrupting devices” can be a bit of an issue as the coils could be good at time of verification and testing, but can fail right after or due to the testing. We recommend to change the Protection System definition to read “up to the trip coils(s)” instead the word “through”
Individual
Terry Bowman
Progress Energy Carolinas
No
See comment associated with question 2.
No
Progress Energy does not believe that the definition should be implemented separately from and prior to the implementation of PRC-005-2. We believe there should be a direct linkage between the definition’s effective date to the approval and implementation schedule of PRC-005-2. Since this new definition should be directly linked to the proposed revised standard, it would be premature to make this new definition effective prior to the effective date of the new standard. We believe that changes to the maintenance program should be driven by the revision of the PRC standard, not by the revision of a definition.
Group
Hydro One
Sasa Maljukan
Hydro One Networks, Inc.
No
Hydro One suggests adding “Protection System Components including” in the beginning. This is because the word “components” has been used extensively throughout the standard and there is no mention of what constitutes a protection system component in the standard. The word

“component” does find mention in FAQs, however, it is recommended to mention it in the main standard. The revised definition should read as follows: Protective System Components including Protective relays, communication systems necessary for correct operation of protective functions, voltage and current sensing devices providing inputs to protective relays and associated circuitry from the voltage and current sensing devices, station dc supply, and control circuitry associated with protective functions from the station dc supply through the trip coil(s) of the circuit breakers or other interrupting devices. There is not enough clarity on whether a Distribution Provider (DP) will be able to clearly identify which all protection system components does it own and need to maintain. This is critical since NPCC had proposed a SAR to this effect which was not accepted by NERC citing that this concern will be incorporated in the revised standard. Also, reference should be made to Project 2009-17 in which Y-W Electric Association, Inc. (Y-WEA) and Tri-State Generation and Transmission Association, Inc. (Tri-State) requested an interpretation of the term "transmission Protection System" and specifically whether protection for a radially-connected transformer protection system energized from the BES is considered a transmission Protection System and is subject to these standards.
No
The time provided for the first phase “at least six months” is too open ended and does not give entities a clear timeline. HYDRO ONE suggests 1 year for the first phase. Also, HYDRO ONE suggests phasing out the second phase in stages.
Individual
Kirit Shah
Ameren
Yes
We agree that the definition provides clarity and will enhance the reliability of the Protection Systems to which it is applicable; however, we suggest that a Glossary term for Protective Relay be added in order to clarify in all standards inclusion of relays that measure voltage, current, frequency and/or phase angle to determine anomalies, as stated in PRC-005-2 R1. We believe there should be a direct linkage of the definition’s effective date to the approval and implementation schedule of PRC-005-2. Since this new definition is directly linked to the proposed revised standard, it would be premature to make this definition effective prior to the effective date of the new standard. We agree that the voltage and current inputs at the protective relays correctly identifies that component, that this excludes the instrument transformer itself. We suggest replacing "to" with "at", and omitting "and associated circuitry from the voltage and current sensing devices."
No
As noted above, the implementation plan should be linked to the approval of PRC-005-2. Since this new definition is directly linked to the proposed revised standard, it would be premature to make this definition effective prior to the effective date of the new standard. Otherwise, entities must address equipment, documentation, work management process, and employee training changes needed for compliance twice within an unreasonably short timeframe. If PRC-005-2 receives regulatory approval in 1st quarter 2011, PSMP implementation along with this revised definition should be effective at the beginning of 2012 to coincide with the calendar year. These nine months will be needed to fully assess and address the necessary maintenance program documentation changes, maintenance system tool revisions, and personnel training needed to incorporate this new definition into our program.
Group
Pepco Holdings, Inc. - Affiliates
Richard Kafka
Pepco Holdings, Inc.
No
It is still unclear whether relays that respond to mechanical inputs, such as sudden pressure relays, are included in the proposed definition as protective relays. While PRC-005-2 R1 limits the scope of that particular standard to protection systems that sense electrical quantities, it remains unclear in other standards that use the term “Protection System” (such as PRC-004) whether devices responding to mechanical inputs are included. As such, we suggest that the term “Protective Relay” also be defined, and that the definition clearly exclude devices that respond to mechanical inputs in line with the NERC interpretation of PRC-005-1 in response to the CMPWG request.
No
The 6 month time frame to update the revised maintenance and testing program is too short. Specifically identifying and documenting each component not presently individually identified in our maintenance databases, auxiliary relays, lock-out relays, etc. will require a major effort. We recommend at least one year.
Individual
Hugh Conley

Allegheny Power
Yes
Yes
Individual
Scott Berry
Indiana Municipal Power Agency
Yes
No
The second part of the implementation effective date does not make sense and might be wrong. The second part talks about implementing any addtional maintenance and testing (required in R2 of PRC-005-1- Transmission and Generation Protection system Maitenance and Testing); this is refering to version 1 of the standard and there should be no additional maintenance and testing added from version 1 of the standard, just version 2 which is the new version. Overall, the wording on this implementation plan needs to be made more clear about how the implementation plan will work.
Group
NERC Staff
Mallory Huggins
NERC
Yes
Still, to make sure the reference to dc supply is more generic than just “station dc supply,” NERC staff suggests the following modified definition of Protection System: "Protective relays, communication systems necessary for correct operation of protective functions, voltage and current sensing inputs to protective relays and associated circuitry from the voltage and current sensing devices, and any dc supply or control circuitry associated with the preceding devices."
Yes
Individual
Terry Habour
MidAmerican Energy Company
No
The definition is expanded and clarified in the language of PRC-005-2. These changes should be incorporated in the definition to insure it is used consistently in PRC-005 and any other standards where it appears. The following is a suggested revised definition: “Protection System” is defined as: A system that uses measurements of voltage, current, frequency and/or phase angle to determine anomalies and to trip a portion of the BES to provide protection for the BES and consists of 1) Protective relays for BES elements and, 2) Communications systems necessary for correct BES protection system operations and, 3) Current and voltage sensing devices supplying BES protective relay input and, 4) Station DC supply to BES protection systems excluding battery chargers, and 5) DC control trip paths to the trip coil(s) of the circuit breakers or other interrupting devices for BES elements.
No
The protection system definition implementation plan should be consistent with the implementation plan of PRC-005-2 R1. Actual maintenance requirements implementation should be as required by the PRC-005-2 implementation plan and should not be included in the implementation plan for the protection system definition.
Individual
Martin Bauer
US Bureau of Reclamation
Yes
No
The Time Horizons are too narrow for the implementation of the standard as written. The SDT appears to have not accounted for the data analysis associated with performance based systems. The data collection, analysis, and subsequent decisions associated development of a maintenance program and its justification do not occur overnight especially with larger utilities. In addition, this new standard will require complete rewrite of an entities internal maintenance programs. The internal processes associated with these vary based on the size of the entity and its organizational structure. Since this standard is so invasive into the internal decisions

concerning maintenance, the standard should allow at least 18 months for entities to rewrite their internal maintenance programs to meet the program development requirements and 18 months to train the staff in the new program, incorporate the program into the entities compliance processes, and to implement the new program.

NERC
NORTH AMERICAN ELECTRIC
RELIABILITY CORPORATION

Consideration of Comments on Initial Ballot of PRC-005-2 – Protection System Maintenance

The Protection System Maintenance Standard Drafting Team (PSM SDT) thanks all those who participated in the initial ballot for the proposed revisions to PRC-005 - Protection System Maintenance.

- 87.85% quorum
- 39.35 % weighted segment approval

All comments received with affirmative and negative ballots are included in this report.

All balloters are advised to review the comments and responses in this report as an aid in determining how to participate in the recirculation ballot.

Both a clean and a redline version of the standard that shows the conforming revisions are posted at the following site:

http://www.nerc.com/filez/standards/Protection_System_Maintenance_Project_2007-17.html

Many commenters objected to the establishment of maximum allowable intervals and offered comments on virtually every individual activity and interval within the Tables. The SDT responded that "FERC Order 693 and the approved SAR assigned the SDT to develop a Standard with maximum allowable intervals and minimum maintenance activities." In an effort to provide more clarity, the SDT also completely revised the Tables of maximum maintenance intervals/minimum maintenance activities, and made numerous other changes throughout the draft Standard. Many commenters also indicated a preference for much of the information that is currently contained within the reference documents to be included within the Standard itself. The SDT responded by including the definitions of terms exclusively used within this standard, specifically "component type", "component", "segment", "maintenance correctable issue", and "countable event", , within the body of the standard. Numerous comments were also offered, proposing that the VSLs allow for some amount of non-compliance with the Standard before incurring a violation. The SDT responded by stating that: "The NERC criteria for VSLs do not currently permit them to allow some level of non-performance without being in violation."

If you feel that your comment has been overlooked, please let us know immediately. Our goal is to give every comment serious consideration in this process! If you feel there has been an error or omission, you can contact the Vice President and Director of Standards, Herbert Schrayshuen, at 609-452-8060 or at herb.schrayshuen@nerc.net. In addition, there is a NERC Reliability Standards Appeals Process.[1]

[1] The appeals process is in the Reliability Standards Development Procedures: http://www.nerc.com/standards/newstandardsprocess.html.

Segment:	1
Organization:	International Transmission Company Holdings Corp
Member:	Michael Moltane
Comment:	While voting affirmative due to the improvements over the existing standards, we do have the following comments. We hope the Standards Team can take these comments and suggested improvements into account although we did not get our comments in during the official comment period due to confusion over the overlapping comment/ballot period. The following are ITC Holdings comments corresponding the questions on the comment form: Regarding Question #1: ITC Holdings does not agree with the 6 year time interval for functional testing of the control and trip circuits. It has been our experience that trip failures are rare and that our present 10 year control, trip tests, and other related testing are sufficient in verifying the integrity of the scheme. A scheme that is 100% microprocessor relays except for 1 electromechanical AR or SG relay would be forced to a 6 year interval instead of a 12 year interval. This seems unreasonable for schemes that are otherwise identical. Comments on Question #4: ITC Holdings agrees with the measure and data retention requirements assuming that the requirements only apply to test data after the effective date of the approved standard. Comments on Question #7: It should clearly state in the definition or elsewhere in the standard that automatic ground switches intended to protect the BES are to be considered interrupting devices. This is stated in the Supplemental Reference but the Supplemental Reference is not part of the standard. Please consider splitting the first row in Table 1a (Protective Relays) into 2 separate rows, one for relays other than microprocessor and the other for microprocessor relays. • Include the sentence “Verify that settings are as specified.” In both rows to be clear that this applies to both categories. (The following is intended to be helpful information only not to be included in the comments) The following provides a clue as to what Time Horizon means: From: http://www.nerc.com/docs/pc/ris/Order_890-A_pro_forma_Attachment_C.doc (1) A detailed description of the specific mathematical algorithm used to calculate firm and non-firm ATC (and AFC, if applicable) for its

	scheduling horizon (same day and real-time), operating horizon (day ahead and pre-schedule) and planning horizon (beyond the operating horizon); See Definition at: http://www.nerc.com/files/Time_Horizons.pdf Copy below: Time Horizons Time Horizons are used as a factor in determining the size of a sanction. If an entity violates a requirement and there is no time to mitigate the violation because the requirement takes place in real-time, then the sanction associated with the violation is higher than it would be for violation of a requirement that could be mitigated over a longer period of time. When establishing a time horizon for each requirement, the following criteria should be used: 1. Long-term Planning — a planning horizon of one year or longer. 2. Operations Planning — operating and resource plans from day-ahead up to and including seasonal. 3. Same-day Operations — routine actions required within the timeframe of a day, but not real-time. 4. Real-time Operations — actions required within one hour or less to preserve the reliability of the bulk electric system. 5. Operations Assessment — follow-up evaluations and reporting of real time operations.
Response:	Thank you for your comment. Question #1 - The Tables have been rearranged and considerably revised to improve clarity. Please see new Table 1-5. The SDT believes that mechanical solenoid-operated devices share performance attributes (and failure modes) with electromechanical relays and need to be tested at similar intervals. Performance-based maintenance is an option to increase the intervals if the performance of these devices supports those intervals. Question #4 – The SDT believes that entities cannot be expected to initially have data for requirements that did not previously exist. Question #7 – From a mandatory perspective, this is dependent on the regional BES definitions and on what those definitions may describe to be “transmission Protection Systems.” • The Tables have been rearranged and considerably revised to improve clarity. Please see new Table 1-1. Time Horizon – Thank you for your input.
Segment:	5
Organization:	U.S. Bureau of Reclamation
Member:	Martin Bauer

Comment:	1. There is no reliability based justification to alter the standards to require practices of a subset of entities as allowable intervals. It is incredible that the standard would suppose that requiring the use of weighted average practice of some subset of all entities could reasonable. The purpose of a reliability standard is to ensure the reliability of the BES. There is no indication that the existing standard has posed a threat to the reliability of the BES. There is no data which indicates that the BES reliability is impacted because of certain maintenance practices. The SDT has chosen an approach which has statistical merit and is good information for entities to consider in reviewing their maintenance program. To force an entity to enhance its maintenance program because some subsets of entities have a different program is contrary to the purpose authorized by the Energy Policy Act of 2005. The variables of each entity faces when developing their maintenance practice intervals cannot be calculated through statistical analysis. To presume that the end result (the interval itself) can be applied to other entities ignores the sound decisions made internally to each entity that results in final interval. The standard should return to addressing real reliability impacts as required by law. The desire to improve maintenance programs offers a unique problem to the FERC and regulatory world. The knee jerk reaction is to define a "universal" interval based on some statistical method. What happens if the solution is bad, who will accept the consequences that narrow prescription was wrong and the interval caused a reliability impact. It would no longer be the Entity. The standard does not make such an allowance. History is replete with examples of this type of micro managing. Rather than fall into the same trap, and suffer the consequences of the unknown, it is suggested to allow Entities to optimize their programs to ensure reliability of the BES. If the NERC wants to create a reliability based standard that addresses reliability impacts, the SDT is encouraged to create a standard of "disallowed" practices. These would be practices which have a demonstrated impact on reliability. The SDT should spend to analyzing maintenance practices which have a known impact on reliability (as evidenced by disturbance reports) and develop requirements which disallow such practices or range of practices. In addition, if it is shown that an event in which BES reliability was impacted by the utilities PSMP (as evidenced by disturbance reports), the utility would be required to submit to the RRO a corrective action plan which addresses how the PSMP will be revised and when compliance with that PSMP is to be achieved. 2. The intervals prescription for performance based PSMP virtually eliminates the capability of smaller utilities that do not have a large equipment database to justify a performance based system that may be sound based on their experience. This overly prescriptive approach should be eliminated and return to allowing utilities to justify their programs. 3. The Time Horizons are too narrow for the implementation of the standard as written. The SDT appears to

	have not accounted for the data analysis associated with performance based systems. The data collection, analysis, and subsequent decisions associated development of a maintenance program and its justification do not occur overnight especially with larger utilities. In addition, this new standard will require complete rewrite of an entities internal maintenance programs. The internal processes associated with these vary based on the size of the entity and its organizational structure. 4. Since this standard is so invasive into the internal decisions concerning maintenance, the standard should allow at least 18 months for entities to rewrite their internal maintenance programs to meet the program development requirements and 18 months to train the staff in the new program, incorporate the program into the entities compliance processes, and to implement the new program.
Response:	Thank you for your comment. 1. FERC directed the SDT to establish maximum time intervals between maintenance activities. The SDT recognized that different types of equipment, different generations of equipment, different failure modes of equipment, and different versions of time-based maintenance had to be considered. The SDT agrees with the commenter that the Standard allows statistical analysis, and performance-based maintenance allows an entity to create time intervals that could exceed any "weighted-averages" time-based intervals. The Supplementary Reference adds a Section 9 to show how an entity can create a performance-based maintenance interval. 2. FERC directed the SDT to establish maximum time intervals between maintenance activities. Smaller entities may aggregate their component populations with other entities having similar programs – see Section 9 of the Supplementary Reference document and FAQ IV.3.A. Entities are not required to use performance-based PSMPs; this option is made available to entities who wish to use it. 3. Your comment appears to address the Implementation Plan, not Time Horizons. The Implementation Plan for Requirement R1 has been extended from three months to twelve months. For performance-based programs, Attachment A specifies that there must first be acceptable results, and that a time-based program (per the Tables) must be used until then. See FAQ IV.3.B. 4. The Implementation Plan for Requirement R1 has been extended from three months to twelve months.
Segment:	5
Organization:	South Mississippi Electric Power Association
Member:	Jerry W Johnson
Comment:	The proposed Standard is overly prescriptive and too complex to be practically implemented. An entity

	making a good faith effort to comply will have to navigate through the complexities and nuances, as illustrated by the extensive set of documents the SDT has provided in an attempt to explain all the requirements and nuances. The need for an extensive “Supplementary Reference Document” and an extensive “Frequently Asked Questions Document”, in addition to 13 pages of tables and an attachment in the standard itself, illustrate that the proposal is too prescriptive and complex for most entities to practically implement. 1. The descriptions for the "type of protection system components" do not appear to be consistent between Tables, 1a, 1b and 1c. 2. The maximum maintenance interval for a lead-acid vented battery is listed at 6 calendar years for performing a capacity test. This type of test has been proven to reduce battery life and an interval of 10 to 12 years would be better. 3. The maximum maintenance interval for "Station DC supply" was set at 3 months. This is too short of a period and 6 months would be better. 4. The control and trip circuits associated with UVLS and UFLS do not require tripping of the breakers but all other protection systems require tripping of the breakers, this appears to be inconsistent? 5. Digital relays have electromagnetic output relays. Do they fall into the electromechanical trip or solid state trip? 6. Need for clarification: The standard indicates that only voltage and current signals need to be verified. Does this mean that voltage and current transformers do not need to be tested by applying a primary signal and verifying the secondary output? 7. With regard to DPs who own transmission Protection Systems, the standard is still very unclear on when a DP owns a transmission Protection System. Many DPs own equipment that is included within the definition of a Protection System; however, ownership of such equipment does not necessarily translate directly into a transmission Protection System under the compliance obligations of this standard. DPs need to know if this standard applies to them and right now, there is no certain way of determining that from within this language or previous versions of this standard.

	8. The phrase "Verify Battery cell-to-cell connection resistance" has entered the table where it did not exist before. On some types of stationary battery units, this internal connection is inaccessible. On other types the connections are accessible, but there is no way to repair them based on a bad reading. And bad cell-to-cell connections within units will be detected by the other required tests. This requirement will cause entities to scrap perfectly good batteries just so this test can be performed, with no corresponding increase in bulk electric system reliability while taking an unnecessary risk to personnel and the environment. And because buying battery units composed of multiple cells allows space saving designs, entities may be forced to buy smaller capacity batteries to fit existing spaces. This may end up having a negative effect on reliability. Suggest substituting "unit-to-unit" wherever "cell-to-cell" is used in the table now. 9. The level 2 table regarding Protection Station dc supply states that level 1 maintenance activities are to be used, but then goes on to give a list of Maintenance Activities that don't match those in level 1. Which activities shall we use? 10. Same situation for Station DC Supply (battery is not used) where the 18 month interval is missing. IEEE battery maintenance standards call for quarterly inspections. These are targets, though, not maximums. An entity wishing to avoid non-compliance for an interval that might extend past three calendar months due to storms and outages must set a target interval of two months thereby increasing the number of inspections each year by half again. This is unnecessarily frequent.
Response:	Thank you for your comments. FERC Order 693 and the approved SAR assign the SDT to develop a Standard with maximum allowable intervals and minimum maintenance activities. 1. The Tables have been rearranged and considerably revised to improve clarity. Please see new Tables 1-1 through 1-5. 2. The SDT disagrees. 3. The SDT disagrees. 4. Your observation is correct. The Tables have been rearranged and considerably revised to improve clarity. Please see new Table 1-5. This is an intentional difference between UFLS/UVLS and the remainder of the Protection Systems addressed within the Standard, because of the distributed nature of UFLS/UVLS and because these devices are usually tripping distribution system elements 5. The Tables have been rearranged and considerably revised to improve clarity. Please see new Table 1-1. 6. Your observation is correct. 7. Your concern seems to be primarily related to the applicable regional BES definition.

	8. The Tables have been rearranged and considerably revised to improve clarity. Please see new Table 1-4. "Cell" has been replaced with "cell/unit" to address this concern. 9. The Tables have been rearranged and considerably revised to improve clarity. Please see new Table 1-4. 10. The SDT disagrees. You should complete the activities within the intervals specified.
Segment:	5
Organization:	RRI Energy
Member:	Thomas J. Bradish
Comment:	For PRC-005-2, while there is nothing inherently wrong with the requirements, RRI voted affirmative with concern. Our concern is we believe that rather than fixing the issues that caused the 2003 blackout, there is a continual drift to extensive micro-management to take control of every aspect of the entire industry through regulation in the name of reliability. I believe the documentation required to demonstrate 100% compliance to this standard will be a serious challenge to achieve uniformly for so many components across a widely dispersed fleet, especially in the punitive, zero-tolerance compliance world that presently exists. It only takes the things we are in short supply: time, money, and people. It will drive industry to better systems and performance, but there will be a painful price, especially on the development side. An example of the impact of this standard: station power plant batteries are sized to carry large DC loads with the protection system as only a small fraction of the load profile. Rather than performing a risk assessment for station with low capacity factors (for example RRI has a two unit station that had an average capacity factor in 2009 of 1.72%) after the battery slightly crosses over its degradation threshold, there will be no choice but an immediate and expensive replacement. This type of requirement will push many units into pre-mature retirement or mothballing.
Response:	Thank you for your comment.
Segment:	3
Organization:	Tampa Electric Co.
Member:	Ronald L Donahey
Comment:	The level of DC circuit testing required every time the relay is tested represents potentially a negative impact to reliability given the complicated control circuitry in an energized station. Even though you take out an element out of service, the DC control circuits are often interconnected for functions such as breaker failure,

	bus and transformer lockouts, etc. This level of testing needs to be done when initial construction but this increase in testing is not justifiable given the reliability risk and cost. TEC's record for misoperations do to circuitry failure does not support this need.
Response:	Thank you for your comment. The Tables have been rearranged and considerably revised to improve clarity. Please see new Table 1-5. The SDT believes that mechanical solenoid-operated devices share performance attributes (and failure modes) with electromechanical relays and need to be tested at similar intervals. Performance-based maintenance is an option to increase the intervals if the performance of these devices supports those intervals.
Segment:	5
Organization:	Salt River Project
Member:	Glen Reeves
Comment:	SRP believes the requirements of the Standard are confusing and may be problematic in determining compliance. We also believe the required functional testing of the breaker trip coil may potentially increase maintenance outages of circuit breakers. In most cases, circuit breaker maintenance outages can be coordinated such that Protection System maintenance and testing can be done simultaneously. However, in some cases this may not be possible. Outages of any BES facility whether planned or unplanned can impact system reliability. SRP suggests that trip coil monitoring devices be included as an acceptable means of ensuring the trip coil is functioning properly. This will help to avoid unnecessary outages.
Response:	Thank you for your comment. The Tables have been rearranged and considerably revised to improve clarity. Please see new Table 1-5. The SDT believes that mechanical solenoid-operated devices share performance attributes (and failure modes) with electromechanical relays and need to be tested at similar intervals. Performance-based maintenance is an option to increase the intervals if the performance of these devices supports those intervals.
Segment:	1, 3, 4, 6
Organization:	Seattle City Light
Member:	Pawel Krupa, Dana Wheelock, Hao Li, Dennis Sismaet
Comment:	Functional testing is impractical.

Response:	Thank you for your comment. Functional testing is not the only means of completing the required maintenance, although it may be the most practical.
Segment:	3
Organization:	JEA
Member:	Garry Baker
Comment:	JEA does not believe the standard adequately addresses issues like component, FAQ, etc as identified below: 1. R1.1 Identify all Protections System components. What is meant by Protection System component? Is a component a wire, contact, device, etc. A list of components as intended by the SDT would be illustrative in understanding the SDT's intent of what a component includes. 2. Are the FAQ and Supplemental Reference going to be adopted as part of this standard? These documents contain information that is critical to the proper understanding and interpretation of the standard, thus either the standard needs to be rewritten to include this information, or the FAQ and Supplemental Reference need to be adopted as part of this standard. Any inconsistencies between the FAQ and the standard, as written, would need to be corrected. 3. The maximum maintenance interval for a lead-acid vented battery is listed as 6 calendar years for performing a capacity test. This type of test has been proven to reduce battery life and a longer capacity test interval of 10 to 12 years would be better, allowing for longer battery life. 4. The implementation period for R1.1 of 3 months is too short and should be extended to one calendar year; of course this is dependent on the complexity of items listed as part of the definition of "Protection System component."
Response:	Thank you for your comment. 1. A definition of "Component" has been added to the draft Standard. The SDT's intent is that this definition will be used only in PRC-005-2, and thus will remain with the Standard when approved, rather than being relocated to the Glossary of Terms. 2. These documents provide supporting discussion, but are not part of the Standard. The SDT intends that these be posted as Reference Documents, accompanying the Standard.

	3. The SDT disagrees. 4. The Implementation Plan for Requirement R1 has been modified from three months to twelve months.
Segment:	5
Organization:	Public Utility District No. 1 of Lewis County
Member:	Steven Grega
Comment:	1. As written PRC-005-2 does not recognize or accommodate the many type of batteries in use at substations. To accommodate many of the prescribed tests, the batteries would have to be disassembled to conduct the test with little valuable information gained. Suggest wording only saying the batteries should be periodically test to assure that they perform as designed. Let the entities' engineers decide on what is most appropriate for their batteries. 2. Having a standard that requires 100% compliance on 1000's of components is a good way of assuring many violations. Most protective system can function with half the protection in service. Typically most engineers over design and have backup upon backup on critical elements. Suggest standard require a lesser compliance rate; say 90% to 95% during an audit. The elements not in compliance could be followed by a 12 month plan to bring other elements into compliance but the entity at 90% to 95% would still be found compliant. In summary, this proposed standard has gone beyond the reasonably level of regulation by NERC. Therefore, I am voting not to affirm the revision to this standard.
Response:	Thank you for your comment. 1. The Tables have been rearranged and considerably revised to improve clarity. Please see new Table 1-4. 2. The NERC criteria for VSLs do not currently permit them to allow some level of non-performance without being in violation.
Segment:	3
Organization:	City of Farmington
Member:	Linda R. Jacobson
Comment:	As written, is opens up the PRC-005 standard to Technical Feasibility Exceptions because some batteries are not able to accommodate all of the tests proscribed in the draft standard as explained by Steve Alexanderson in a prior e-mail to the ballot pool. The draft standard would cause NERC to regulate through the standards

	battery testing, DC circuit testing, etc. on distribution elements with no significant improvement to BES reliability, which is beyond the statutory scope of the standards
Response:	Thank you for your comment. The Tables have been rearranged and considerably revised to improve clarity. Please see new Table 1-4. "Cell" has been replaced with "cell/unit" to address this concern. The Standard only addresses distribution-located devices to the degree that they address BES issues. UFLS and UVLS per the relevant NERC Standards are frequently implemented on the distribution system.
Segment:	1
Organization:	Pacific Gas and Electric Company
Member:	Chifong L. Thomas
Comment:	The requirements in the latest draft are confusing and at times seem to be in conflict with other requirements. From a compliance and enforcement perspective, this confusion would make the standard difficult to audit. 1. We are concerned over R1.1, where all components must be identified, without a definition for the word component or the granularity specified. While the FAQ gives a definition, and allows for entity latitude in determining the granularity, the FAQ is not part of the standard. We are concerned whether identification is required for every individual component, such as each auxiliary relay, or is it sufficient that the auxiliary relays are included within the scheme that is being tested and documented. Do the auxiliary relays need to be documented within the maintenance database and/or on the actual test reports of schemes being tested? We suggest that the FAQ definitions be included within the standard. 2. We agree with most of the changes from the last draft in Table 1a, 1b and 1c. However, the phrase "Verify Battery cell-to-cell connection resistance" has entered the table where it did not exist before. On some types of stationary battery units, this internal connection is inaccessible. On other types the connections are accessible, but there is no way to repair them based on a bad reading. And bad cell-to-cell connections within units will be detected by the other required tests. This requirement will cause entities to scrap perfectly good batteries just so this test can be performed, with no corresponding increase in bulk electric system reliability while taking an unnecessary risk to personnel and the environment. And because buying battery units composed of multiple cells allows space saving designs, entities may be forced to buy smaller capacity batteries to fit existing spaces. This may end up having a negative effect on reliability. Suggest substituting "unit-to-unit" wherever "cell-to-cell" is used in the table now.

	3. The level 1 table regarding Control and trip circuits with electromechanical trip or auxiliary contacts now includes exception for microprocessor relays, but there is no listing for the requirements for microprocessor relays. 4. The level 2 table regarding Protection Station dc supply states that level 1 maintenance activities are to be used, but then goes on to give a list of Maintenance Activities that don't match those in level 1. Which activities shall we use? 5. Same situation for Station DC Supply (battery is not used) where the 18 month interval is missing.
Response:	Thank you for your comment. 1. Requirement R1, part 1.1, has been revised to state, "Address all Protection System component types" in consideration of your comment. 2. The Tables have been rearranged and considerably revised to improve clarity. Please see new Table 1-4. "Cell" has been replaced with "cell/unit" to address this concern. 3. The Tables have been rearranged and considerably revised to improve clarity. Please see new Tables 1-1 and 1-5. 4. The Tables have been rearranged and considerably revised to improve clarity. Please see new Table 1-4. 5. The Tables have been rearranged and considerably revised to improve clarity. Please see new Table 1-4.
Segment:	5
Organization:	Pacific Gas and Electric Company
Member:	Richard J. Padilla
Comment:	The level of detail of this standard is over the top and currently conflicts with other standards and is open for future conflicts. We recommend that the standard DT evaluate the basic rational for the standard and limit its scope. Some examples are: 1. As written, is opens up the PRC-005 standard to Technical Feasibility Exceptions because some batteries are not able to accommodate all of the tests proscribed in the draft standard as explained by Steve Alexanderson in a prior e-mail to the ballot pool. The draft standard would cause NERC to regulate through the standards battery testing, DC circuit testing, etc. on distribution elements with no significant

	improvement to BES reliability, which is beyond the statutory scope of the standards 2. The standard unreasonably retains the "100% compliance" paradigm for thousands, if not millions of protection system components as written, the standard requires testing of batteries, DC control circuits, etc., of distribution level protection components associated with UFLS and UVLS. UFLS and UVLS are different than protection systems used to clear a fault from the BES. An uncleared fault on the BES can have an Adverse Reliability Impact and hence; the focus on making sure the fault is cleared is important and appropriate. However, a UFLs or UVLS event happens after the fault is cleared and is an inexact science of trying to automatically restore supply and demand balance (UFLS) or restore voltages (UVLS) to acceptable levels. If a few UFLS or UVLS relays fail to operate out of potentially thousands of relays with the same function, there is no significant impact to the function of UFLS or UVLS. Hence, there is no corresponding need to focus on every little aspect of the UFLS or UVLS systems. Therefore, the only component of UFLS or UVLS that ought to be focused on in the new PRF-005 standard is the UFLS or UVLS relay itself and not distribution class equipment such as batteries, DC control circuitry, etc., and these latter ought to be removed from the standard. 3. In addition, most distribution circuit are radial without substation arrangements that would allow functional testing without putting customers out of service while the testing was underway, or at least without momentary outages while customers were switched from one circuit to another. Therefore, as written, we would be sacrificing customer service for a negligible impact on BES reliability
Response:	Thank you for your comment. 1. The Tables have been rearranged and considerably revised to improve clarity. Please see new Table 1-4. “Cell” has been replaced with “cell/unit” to address this concern. The Standard only addresses distribution-located devices to the degree that they address BES issues. UFLS and UVLS per the relevant NERC Standards are frequently implemented on the distribution system. 2. The NERC criteria for VSLs do not currently permit them to allow some level of non-performance without being in violation. 3. Functional testing is not the only means of completing the required maintenance, although it may be the most practical.
Segment:	5
Organization:	Indeck Energy Services, Inc.
Member:	Rex A Roehl
Comment:	As discussed at the FERC Technical Conference on Standards Development, the goal of the standards

	program is to avoid or prevent cascading outages--specifically not loss of load. The expansion of this standard deviates significantly from its purpose of maintaining protective systems that affect BES reliability. It doesn't recognize that not all relays affect reliability. If reliability is measured by a Reportable Disturbance, then the threshold varies by control area--largest contingency. The standard should include a process, not unlike the risk based assessment in CIP-002-2 R1, to include as "identified components" only those affecting reliability. All of the various reliability criteria should be considered.
Response:	Thank you for your comment. "BES reliability" is more than simply avoiding "cascading outages" – as illustrated by the approved definition of "Adequate Level of Reliability" as promulgated by the NERC Planning and Operating Committees in response to a directive from FERC, and as described in Section 215 of the Federal Power Act.
Segment:	5
Organization:	Black Hills Corp
Member:	George Tatar
Comment:	1. Draft is confusing & seems to conflict with other requirements. Table 1b Maint. Activities needs to define whether all protection logic or conditions would initiate a relay trip output are required to be simulated & tested to the relay tripping output contact. 2. The Attachment A definition of "common factors" is way too broad to be utilized in defining a grouping of protection system devices.
Response:	Thank you for your comments. 1. The Tables have been rearranged and considerably revised to improve clarity. Please see new Table 1-5. 2. The SDT is not clear whether your concern is about "common factors" as used in the definition of "Segment." See Section 9 of the Supplementary Reference document for a discussion of performance-based maintenance.
Segment:	4
Organization:	Wisconsin Energy Corp.
Member:	Anthony Jankowski
Comment:	1. Table 1a, Protective Relays: Change 1st line to: "Test and calibrate if necessary the relays…"

	Table 1a & 1b, Protective Relays: 3rd line: Change “check the relay inputs…” to “verify the relay inputs…” The term “check” is not defined, whereas “verify” is. Tables 1a & 1b We agree that six / twelve years is an acceptable interval for relay maintenance. Table 1a & 1b, Control & Trip Circuits: The proposed addition to require tripping circuit breakers during Protection System maintenance will require outages and is therefore detrimental to BES reliability and should be removed. – Generating unit protection system maintenance is done during scheduled outages. The high voltage breaker on a generating unit often remains energized to back feed and supply station auxiliaries when the generator is offline. The proposed requirement will increase the amount of equipment requiring an outage for maintenance, and possibly the length of the outage, resulting in significantly more equipment out of service as well as increased costs. This requirement also results in greater maintenance efforts and costs when there are redundant protection system equipment (breaker trip coils, lockout relays, etc), which is contrary to good practice and reliability. – Many of the breakers that We Energies, as the Distribution Provider, trips from its BES protection systems are not owned by We Energies and are owned by a separate transmission company. The trip testing and maintenance of the transmission company may not coincide with our relay maintenance testing program. The standard shall have allowances for the entity to ONLY test or maintain equipment that it OWNS! Table 1a, Station dc supply: – The activity to verify the state of charge of battery cells is too vague, and requires more specific action. We assume that the drafting committee is recommending specific gravity measurements. Specific gravity measurements have not been shown to be an accurate indicator of state of charge. In addition, as shown in the nuclear power industry, there is no established corrective action that is taken based on specific gravity results (eg. Don’t require a test where there is no acceptable corrective action). – The activities to “verify battery continuity” and “check station dc supply voltage” are also vague and need to be more clearly specified what is intended. – The 3 month time interval for battery impedance testing is too frequent. 18 month or annual testing is more appropriate.

	– The 3 calendar year performance or service test is too frequent and will actually remove life from a battery and reduce reliability. Recommend capacity testing no more that every 5 years and more frequent test if the capacity is within 10% of the end of life or design. This is consistent with the nuclear power industry. Table 1b, Station dc supply: – Recommend a change or addition to Table 1b - Recommend a level 2 monitoring (not just a default to the level 1 maintenance activities) which allows for the removal of quarterly "check" of electrolyte levels, DC supply voltage, and DC grounds - if station DC supply (charger) voltage is continuously monitored (eg. one should not have detrimental gassing of a battery if the float voltage of the battery is properly set and monitored). Table 1a, Associated communications systems: The requirement to verify functionality every three months is excessive; verifying this every twelve months is adequate. Tables 1a & 1b – Although the latest standard provided some additional clarification, more clarification is required on what maintenance / testing is ONLY required for UFLS/UVLS protection systems vs. BES protection systems (eg. UFLS / UVLS systems – Is a verification of proper voltage of the DC supply the only battery or DC supply test required (e.g. no state of charge, float voltage, terminal resistance, electrolyte level, grounds, impedance or performance test, etc.) – The requirement to retain data for the two most recent maintenance cycles is excessive. The required data should be limited to the complete data for the most recent cycle, and only the test date for the previous cycle. 2. We Energies does not agree to the implementation plan proposed. While it makes common sense to proceed with R1 prior to proceeding with implementing R2, R3, and R4, the timeline to be compliant for R1 is too short. It will take a considerable amount of resources to migrate the maintenance plan from today's standard to the new standard in phase one. ATC recommends that time to develop and update the revised program be increased to at least one year followed by a transition time for the entity to collect all the necessary field data for the protection system within its first full cycle of testing. (In ATC's case would be 6 years) To address phase two, We Energies believes human and technological resources will be

	overburdened to implement this revised standard as written. The transition to implementing the new program will take another full testing cycle once the program has been updated. Increased documentation and obtaining additional resources to accomplish this will be challenging. Implementation of PRC-005-2 will impact We Energies in the following manner: a. Increase costs: double existing maintenance costs. b. Since there will be a doubling of human interaction (or more), it is expected that failures due to human error will increase, possibly proportionately. c. Breaker maintenance may need to be aligned with protection scheme testing, which will always contain elements that are include in the non-monitored table for 6 yr testing. d. We Energies is developing standards for redundant bus and transformer protection schemes. This would allow We Energies to test the protection packages without taking the equipment out of service. Further if one system fails, there is full redundancy available. With the current version of PRC-005-2, We Energies would need to take an outage to test the protection schemes for a transformer or a bus; there is not an incentive to install redundant schemes. We Energies is working with a condition based breaker maintenance program. This program's value would be greatly diminished under PRC-005-2 as currently written. 3. Consideration also needs to be given for other NERC standards expected to be passed and in the implementation stage at the same time, such as the CIP standards.
Response:	Thank you for your comment. 1. The Tables have been rearranged and considerably revised to improve clarity. Please see new Table 1-5. 2. The Implementation Plan for Requirement R1 has been changed from three months to twelve months. 3. This issue should be presented to the NERC Standards Committee.
Segment:	3, 5
Organization:	Wisconsin Electric Power Marketing, Wisconsin Electric Power Co.
Member:	James R. Keller, Linda Horn
Comment:	1. Table 1a, Protective Relays: Change 1st line to: "Test and calibrate if necessary the relays…" Table 1a & 1b, Protective Relays:

	3rd line: Change “check the relay inputs…” to “verify the relay inputs…” The term “check” is not defined, whereas “verify” is. Tables 1a & 1b We agree that six / twelve years is an acceptable interval for relay maintenance. Table 1a & 1b, Control & Trip Circuits: The proposed addition to require tripping circuit breakers during Protection System maintenance will require outages and is therefore detrimental to BES reliability and should be removed. Generating unit protection system maintenance is done during scheduled outages. The high voltage breaker on a generating unit often remains energized to back feed and supply station auxiliaries when the generator is offline. The proposed requirement will increase the amount of equipment requiring an outage for maintenance, and possibly the length of the outage, resulting in significantly more equipment out of service as well as increased costs. This requirement also results in greater maintenance efforts and costs when there are redundant protection system equipment (breaker trip coils, lockout relays, etc), which is contrary to good practice and reliability. Many of the breakers that We Energies, as the Distribution Provider, trips from its BES protection systems are not owned by We Energies and are owned by a separate transmission company. The trip testing and maintenance of the transmission company may not coincide with our relay maintenance testing program. The standard shall have allowances for the entity to ONLY test or maintain equipment that it OWNS! Table 1a, Station dc supply: – The activity to verify the state of charge of battery cells is too vague, and requires more specific action. We assume that the drafting committee is recommending specific gravity measurements. Specific gravity measurements have not been shown to be an accurate indicator of state of charge. In addition, as shown in the nuclear power industry, there is no established corrective action that is taken based on specific gravity results (eg. Don’t require a test where there is no acceptable corrective action). – The activities to “verify battery continuity” and “check station dc supply voltage” are also vague and need to be more clearly specified what is intended. – The 3 month time interval for battery impedance testing is too frequent. 18 month or annual testing is more appropriate.

	– The 3 calendar year performance or service test is too frequent and will actually remove life from a battery and reduce reliability. Recommend capacity testing no more that every 5 years and more frequent test if the capacity is within 10% of the end of life or design. This is consistent with the nuclear power industry. Table 1b, Station dc supply: – Recommend a change or addition to Table 1b - Recommend a level 2 monitoring (not just a default to the level 1 maintenance activities) which allows for the removal of quarterly "check" of electrolyte levels, DC supply voltage, and DC grounds - if station DC supply (charger) voltage is continuously monitored (eg. one should not have detrimental gassing of a battery if the float voltage of the battery is properly set and monitored). Table 1a, Associated communications systems: The requirement to verify functionality every three months is excessive; verifying this every twelve months is adequate. Tables 1a & 1b – Although the latest standard provided some additional clarification, more clarification is required on what maintenance / testing is ONLY required for UFLS/UVLS protection systems vs. BES protection systems (e.g. UFLS / UVLS systems – Is a verification of proper voltage of the DC supply the only battery or DC supply test required (e.g. no state of charge, float voltage, terminal resistance, electrolyte level, grounds, impedance or performance test, etc.) 2. The requirement to retain data for the two most recent maintenance cycles is excessive. The required data should be limited to the complete data for the most recent cycle, and only the test date for the previous cycle.
Response:	Thank you for your comment. 1. The Tables have been rearranged and considerably revised to improve clarity. Please see new Table 1-5. 2. In order that a Compliance Monitor can be assured of compliance, the SDT believes that the Compliance Monitor will need the data of the most recent performance of the maintenance, as well as the data of the preceding one, as well as data to validate that entities have been in compliance since the last audit (or currently, since the beginning of mandatory compliance). The SDT has specified the data

	retention in the posted Standard to establish this level of documentation.
Segment:	1, 6
Organization:	Great River Energy
Member:	Gordon Pietsch, Donna Stephenson
Comment:	1. In Table 1a section-Station DC Supply – 18 calendar months, under Maintenance Activities column, suggest changing under Verify: Battery terminal connection resistance To: Entire battery bank terminal connection resistance (This could have been interpreted as individual batteries) And change: Battery cell-to-cell connection resistance To: Battery cell-to-cell connection resistance, where an external mechanical connection is available. 2. In Table 1a-Station dc supply (that has a component Valve Regulated Lead-Acid batteries) suggest changing Max Maintenance Interval=3 Calendar Years or 3 Calendar Months to 4 Calendar Years or 12 Calendar Months. Our concern is that the insurance companies may push NERC maintenance intervals on all battery banks not associated with the BES. 3. Table 1a-Station dc supply (that has as a component Lead-Acid batteries) Max Maintenance Interval=6 Calendar Years suggest changing to 10 Calendar Years. Reason: performance tests may degrade the battery. 4. Table 1a-Station dc supply (that has as a component Nickel-Cadmium batteries) Max Maintenance Interval=6 Calendar Years suggest changing to 10 Calendar Years. Reason: performance tests may degrade the battery. 5. Table 1b -Level 2 Monitoring Attributes for Component in the row labeled (Control and trip circuitry) we suggest the following change: If a trip circuit comprises multiple paths, at least one of those paths is monitored. Alarming for loss of continuity or dc supply for trip circuits is reported to a location where action can be taken. 6. While all tripping circuits are not completely monitored, the trip coils and the outdoor cable runs are completely monitored. The only portion that would not be monitored is a portion of inter and intra-panel wiring having no moving parts located in a control house. Our company has extremely low failure rate of panel wiring and terminal lugging. I don't think that there is provision for moving control and trip circuitry to performance based maintenance? This control circuitry should be maintained less frequent than un-monitored trip circuits (6 years).

Response:	Thank you for your comment. 1.The Tables have been rearranged and considerably revised to improve clarity. Please see new Table 1-4. This element of the table has been modified to state, "Battery internal cell-to-cell or unit-to-unit connection resistance (where available to measure)" to address this comment. 2. NERC Standards are limited to facilities and equipment related to the BES. How the Standard may be otherwise used is outside the scope of NERC Standards. 3. The SDT disagrees, and believes that a performance test at 6-year intervals is appropiate for Vented Lead Acid and Ni-Cad batteries. A properly maintained battery, according to various credible references (from IEEE, EEI, EPRI, various manufacturers, etc.), can easily handle multiple deep discharges over its expected life. 4. The SDT disagrees, and believes that a performance test at 6-year intervals is appropiate for Ni-Cad batteries. A properly maintained battery, according to various credible references (from IEEE, EEI, EPRI, various manufacturers, etc.), can easily handle multiple deep discharges over its expected life. 5. The Tables have been rearranged and considerably revised to improve clarity. Please see new Table 1-56. The Tables have been rearranged and considerably revised to improve clarity. Please see new Table 1-5. Nothing in the draft Standard (including Attachment A) precludes an entity from using performance-based maintenance for dc control circuits.
Segment:	3
Organization:	Great River Energy
Member:	Sam Kokkinen
Comment:	1. In Table 1a section-Station DC Supply – 18 calendar months, under Maintenance Activities column, suggest changing under Verify: Battery terminal connection resistance To: Entire battery bank terminal connection resistance (This could have been interpreted as individual batteries) And change: Battery cell-to-cell connection resistance To: Battery cell-to-cell connection resistance, where an external mechanical connection is available. 2. In Table 1a-Station dc supply (that has a component Valve Regulated Lead-Acid batteries) suggest changing Max Maintenance Interval=3 Calendar Years or 3 Calendar Months to 4 Calendar Years or 12 Calendar Months. Our concern is that the insurance companies may push NERC maintenance intervals on all

	battery banks not associated with the BES. 3. Table 1a-Station dc supply (that has as a component Lead-Acid batteries) Max Maintenance Interval=6 Calendar Years suggest changing to 10 Calendar Years. Reason: performance tests may degrade the battery. 4. Table 1a-Station dc supply (that has as a component Nickel-Cadmium batteries) Max Maintenance Interval=6 Calendar Years suggest changing to 10 Calendar Years. Reason: performance tests may degrade the battery. 5. Table 1b -Level 2 Monitoring Attributes for Component in the row labeled (Control and trip circuitry) we suggest the following change: If a trip circuit comprises multiple paths, at least one of those paths is monitored. Alarming for loss of continuity or dc supply for trip circuits is reported to a location where action can be taken.
Response:	Thank you for your comment. 1. The Tables have been rearranged and considerably revised to improve clarity. Please see new Table 1-4. This element of the table has been modified to state, "Battery internal cell-to-cell or unit-to-unit connection resistance (where available to measure)" to address this comment. 2. NERC Standards are limited to facilities and equipment related to the BES. How the Standard may be otherwise used is outside the scope of NERC Standards. 3. The SDT disagrees, and believes that a performance test at 6-year intervals is appropiate for Vented Lead Acid and Ni-Cad batteries. A properly maintained battery, according to various credible references (from IEEE, EEI, EPRI, various manufacturers, etc.), can easily handle multiple deep discharges over its expected life. 4. The SDT disagrees, and believes that a performance test at 6-year intervals is appropiate for Ni-Cad batteries. A properly maintained battery, according to various credible references (from IEEE, EEI, EPRI, various manufacturers, etc.), can easily handle multiple deep discharges over its expected life. 5. The Tables have been rearranged and considerably revised to improve clarity. Please see new Table 1-5.
Segment:	5
Organization:	Great River Energy

Member:	Cynthia E Sulzer
Comment:	1. In Table 1a section-Station DC Supply – 18 calendar months, under Maintenance Activities column, suggest changing under Verify: Battery terminal connection resistance To: Entire battery bank terminal connection resistance (This could have been interpreted as individual batteries) And change: Battery cell-to-cell connection resistance To: Battery cell-to-cell connection resistance, where an external mechanical connection is available. 2. In Table 1a-Station dc supply (that has a component Valve Regulated Lead-Acid batteries) suggest changing Max Maintenance Interval=3 Calendar Years or 3 Calendar Months to 4 Calendar Years or 12 Calendar Months. Our concern is that the insurance companies may push NERC maintenance intervals on all battery banks not associated with the BES. 3. Table 1a-Station dc supply (that has as a component Lead-Acid batteries) Max Maintenance Interval=6 Calendar Years suggest changing to 10 Calendar Years. Reason: performance tests may degrade the battery. 4. Table 1a-Station dc supply (that has as a component Nickel-Cadmium batteries) Max Maintenance Interval=6 Calendar Years suggest changing to 10 Calendar Years. Reason: performance tests may degrade the battery. 5. Table 1b -Level 2 Monitoring Attributes for Component in the row labeled (Control and trip circuitry) we suggest the following change: If a trip circuit comprises multiple paths, at least one of those paths is monitored. Alarming for loss of continuity or dc supply for trip circuits is reported to a location where action can be taken. 6. While all tripping circuits are not completely monitored, the trip coils and the outdoor cable runs are completely monitored. The only portion that would not be monitored is a portion of inter and intra-panel wiring having no moving parts located in a control house. Our company has extremely low failure rate of panel wiring and terminal lugging. I don't think that there is provision for moving control and trip circuitry to performance based maintenance? This control circuitry should be maintained less frequent than un-monitored trip circuits (6 years).
Response:	Thank you for your comment. 1. The Tables have been rearranged and considerably revised to improve clarity. Please see new Table 1-

	4. This element of the table has been modified to state, “Battery internal cell-to-cell or unit-to-unit connection resistance (where available to measure)” to address this comment. 2. NERC Standards are limited to facilities and equipment related to the BES. How the Standard may be otherwise used is outside the scope of NERC Standards. 3. The SDT disagrees, and believes that a performance test at 6-year intervals is appropiate for Vented Lead Acid and Ni-Cad batteries. A properly maintained battery, according to various credible references (from IEEE, EEI, EPRI, various manufacturers, etc.), can easily handle multiple deep discharges over its expected life. 4. The SDT disagrees, and believes that a performance test at 6-year intervals is appropiate for Ni-Cad batteries. A properly maintained battery, according to various credible references (from IEEE, EEI, EPRI, various manufacturers, etc.), can easily handle multiple deep discharges over its expected life. 5. The Tables have been rearranged and considerably revised to improve clarity. Please see new Table 1-5. 6. The Tables have been rearranged and considerably revised to improve clarity. Please see new Table 1-5. Nothing in the draft Standard (including Attachment A) precludes an entity from using performance-based maintenance for dc control circuits.
Segment:	1, 3, 5, 6
Organization:	Dominion Virginia Power, Dominion Resources Services, Dominion Resources, Dominion Resources Inc.
Member:	John K Loftis, Michael F Gildea, Mike Garton, Louis S Slade
Comment:	1. There is not enough clarity to clearly identify which protection system components are necessary to protect the BES. We suggest that 4.2.1 be revised to read “protection systems that are designed to provide protection for the BES.” 2. The Standard does not provide a grace period if an entity is unable to meet the maintenance requirement for extenuating circumstances. For example if an entity has to divert maintenance resources to storm restoration. We do not believe the reliability of the Bulk Electric System will be compromised if an entities' maintenance program slips by a few months due to extreme events, especially if it is brought back on track within a short time frame. 3. We are opposed to the six calendar year maximum maintenance interval for microprocessor relays that have auxiliaries.

Response:	Thank you for your comment. 1. The SDT disagrees and believes that the Applicability is correct as stated. 2. "Grace periods" within the Standard are not measurable, and would probably lead to persistently increasing intervals. However, an entity may establish an internal program with grace-period allowance, as long as the entire program (including grace periods) does not exceed the intervals within the Standard. 3. The Tables have been rearranged and considerably revised to improve clarity. Please see new Table 1-1.
Segment:	3
Organization:	Allegheny Power
Member:	Bob Reeping
Comment:	The draft standard expects 100% compliance for millions of protection system components at all times. The standard should consider a statistically based performance metric instead of a performance target that expects 100% compliance.
Response:	Thank you for your comment. The NERC criteria for VSLs do not currently permit them to allow some level of non-performance without being in violation.
Segment:	1
Organization:	Public Service Company of New Mexico
Member:	Laurie Williams
Comment:	Overall, the inclusion of several types of protective relay systems into one standard is reasonable and should include those associated with UVLS and UFLS. Even so, the standard is unmanageably cumbersome with far too many details. Although it has been said that protection systems include the instrument transformers, DC system and sometimes the breaker trip coils it is equally as true to say that the protective relay systems depend on those to effectively respond to the anomaly, typically a short circuit fault. With that said it is those item's maintenance that should potentially be moved to different standards to improve clarity. Their inclusion into this standard by size and complexity overwhelms this standard. This standard should include only those items that utilize similar equipment and techniques to maintain. In this case and at this time that means computer-controlled test sets that also generate the records necessary to prove compliance. Even after distilling the standard to only protective relay systems the complexities and details used to explain

	the non-time-based methodologies contribute to the confusion. But the availability of those methodologies is important and probably cannot be in a different standard. It therefore seems imperative with the inclusion of those methodologies that the DC support system maintenance and instrument transformer maintenance have different standards. The inclusion of so much explanation inside the standard is distracting and perhaps contributes to the confusion. PNM also offers the following specific feedback on the proposed standard: 1. -R1.1: Uniquely identifying 'Protection System components' as asked for in R1.1 may be problematic given protective systems may be logged in maintenance databases as packages rather than individual elements. Because the elements within each package are tested as a group, the requirement to individually list the components of the package and track them as such would provide no additional benefit to system reliability. 2. -The activities outlined in Tables which begin on Page 9 of the proposed Standard are difficult to align with the VSLs given in the standard. 3. -The Tables suggest that test trips of equipment are required as part of the scheduled program, but test trips of equipment may pose a hazard to the BES if the equipment fails due to multiple test trips or mis-operates to remove additional BES facilities from service (ex., breaker failure mis-operation during line relay trip testing), which may pose a potential risk to the BES. An example would be 8 test trips of a generator breaker in order to make it through the testing of all of the system components that have the ability to trip the generator lockout and therefore the breaker. Suggest wording to be added that would include some sort of breaker tripping simulation (test box, lockout simulator, etc.) that could be built into the circuit? 4. -It is still unclear how the audit of an entity's compliance which occurs during the transition time will be viewed if it chooses to immediately transition all of its components to the intervals defined in the standard, but were out of the interval defined by the entity under PRC-005-1? 5. -From the Table 1a – "Verify proper function of the current and voltage signals" is not defined. Is the verification visual? How is this easily measured on circuits with EM relays still in service? 6. -If exposure to BES is evident during a testing interval, how does the TO or GO coordinate with its

	Reliability Coordinator to delay or push out testing that may compromise the testing due date? Example – critical transmission circuit is removed from service under forced outage, testing due on adjacent or other critical circuit where test tripping could compromise BES. What is the documentation procedure to get an exception or coordinate with RC to mitigate? This has been a big hole in any testing program; there is no way to file an exception due to unforeseen circumstances like this one. 7. -Is it recommended that there be on PSMP per Company no matter how many Entities they may have or should there be one PSMP for each entity? Standard is unclear on this issue.
Response:	Thank you for your comment. 1. Requirement R1, part 1.1, has been revised to state, "Address all Protection System component types" in consideration of your comment. 2. The Tables have been rearranged and considerably revised to improve clarity. Please see new Table 1-5. The VSLs have been modified to correspond. 3. The Standard allows functional testing, if used, to be done in overlapping segments to avoid specifically the situations you cite. 4. This is a concern that should be submitted to the compliance monitor. 5. The Tables have been rearranged and considerably revised to improve clarity. Please see new Table 1-3. Also please see Section 15.2 of the Supplementary Reference and FAQ II.3.A, II.3.B, II.3.C, and II.3.D. 6. It would seem prudent to schedule your maintenance to allow for such contingencies. "Grace periods" within the Standard are not measurable, and would probably lead to persistently increasing intervals. However, an entity may establish an internal program with grace-period allowance, as long as the entire program (including grace periods) does not exceed the intervals within the Standard. 7. This is up to the entity. For example, you may choose to have one PSMP for a transmission function and a separate one for a generation function.
Segment:	1
Organization:	PPL Electric Utilities Corp.
Member:	Brenda L Truhe
Comment:	PPL EU is voting negative because the definition of Protective Relays is not limited to only those devices that use electrical quantities as inputs (exclude pressure, temperature, gas, etc).
Response:	Thank you for your comment. The Standard does not preclude entities from maintaining such devices or

	including them in their PSMP.
Segment:	1, 3
Organization:	Platte River Power Authority
Member:	John C. Collins, Terry L Baker
Comment:	The standard is very difficult to interpret even with all of the supplemental documentation and we believe this will lead to more non-compliance of the standard without any increase to system reliability and in some cases the required testing will actually reduce system reliability by putting the system at unnecessary risk to complete the testing.
Response:	Thank you for your comment. The Tables have been rearranged and considerably revised to improve clarity. Please see new Table 1-5.
Segment:	1
Organization:	Nebraska Public Power District
Member:	Richard L. Koch
Comment:	The negative vote is based upon functional trip checking and the affect that it will have on the BES.
Response:	Thank you for your comment. The Tables have been rearranged and considerably revised to improve clarity. Please see new Table 1-5, which no longer includes any specific requirements for functional testing. Performance-based maintenance can also be applied to these functions.
Segment:	1
Organization:	National Grid
Member:	Saurabh Saksena
Comment:	1. National Grid does not agree with the proposed implementation plan. The time provided for the first phase “at least six months” is too open ended and does not give entities a clear timeline. National Grid suggests 1 year for the first phase. National Grid also suggests phasing out the second phase in stages. 2. National Grid does not support the VSL criteria based on "total number of components". Calculating total number of components will be hugely costly and does not enhance any reliability. It will also take away the much needed resources required for maintenance.
Response:	Thank you for your comment.

	1. This comment appears to be related to the Implementation Plan for the definition (which was independent to the Standard), not to the Standard. 2. The SDT believes that the only alternative to these criteria is to provide a binary VSL, which would mean that any non-compliance would be "Severe".
Segment:	3
Organization:	Niagara Mohawk (National Grid Company)
Member:	Michael Schiavone
Comment:	National Grid does not agree with the proposed implementation plan. The time provided for the first phase "at least six months" is too open ended and does not give entities a clear timeline. National Grid suggests 1 year for the first phase. National Grid also suggests phasing out the second phase in stages.
Response:	Thank you for your comment. This comment appears to be related to the Implementation Plan for the definition (which was independent to the Standard), not to the Standard.
Segment:	1, 3
Organization:	MidAmerican Energy Co.
Member:	Terry Harbour, Thomas C. Mielnik
Comment:	For control and trip circuit maintenance the requirement includes "a complete functional trip test". In order to accomplish this type of testing given current design of lock-out relay and interrupting device trip circuitry multiple breakers and line terminal outages would be required simultaneously. In addition this type of testing has the potential to result in unintentional tripping of equipment that could cause equipment damage and customer outages. Segmentation of trip circuits by lifting wires has the potential for incorrect restoration following testing. This type of testing has the potential to degrade system reliability as multiple entities schedule this work. An alternate to complete functional testing that does not potentially degrade system reliability should be substituted.
Response:	Thank you for your comment. The Tables have been rearranged and considerably revised to improve clarity. Please see new Table 1-5, which no longer includes any specific requirements for functional testing. Performance-based maintenance can also be applied to these functions. Electromechanical devices such as aux or lockout relays remains at 6 years, as these devices contain "moving parts" which must be periodically exercised to remain reliable.

Segment:	1
Organization:	Idaho Power Company
Member:	Ronald D. Schellberg
Comment:	Monitoring the state of charge using current measurement methods would increase the workload and staffing requirements beyond what we feel is necessary with little additional value to reliability beyond specific gravity measurements.
Response:	Thank you for your comment. The Standard is requiring that state-of-charge be determined, but does not specify how. Specific gravity testing (no longer required within the Tables) would be one method.
Segment:	1
Organization:	Commonwealth Edison Co.
Member:	Daniel Brotzman
Comment:	1. Nuclear generators are licensed to operate and regulated by the Nuclear Regulatory Commission (NRC). Each licensee operates in accordance with plant specific Technical Specifications (TS) issued by the NRC which are part of the stations' Operating License. TS allow for a 25% grace period that may be applied to TS Surveillance Requirements. Referencing NRC issued NUREGs for Standard Issued Technical Specifications (NUREG-143 through NUREG-1434) Section 3.0, "Surveillance Requirement (SR) Applicability," SR 3.02 states the following: "The specified Frequency for each SR is met if the Surveillance is performed within 1.25 times the interval specified in the Frequency, as measured from the previous performance or as measured from the time a specified condition of the Frequency is met." The NRC Maintenance Rule (10 CFR 50.65) requires monitoring the effectiveness of maintenance to ensure reliable operation of equipment within the scope of the Rule. Adjustments are made to the PM (preventative maintenance) program based on equipment performance. The Maintenance Rule program should provide an acceptable level of reliability and availability for equipment within its scope. The NRC has provided grace periods for certain maintenance and surveillance activities. Exelon strongly believes that SDT should consider providing this grace period to be in agreement and be consistent with the NRC methodology. Not providing this grace period will directly affect the existing nuclear station practices (i.e., how stations schedule and perform the maintenance activities) and may lead to confusion as implementing dual requirements is not the normal station process. Nuclear generating stations have refueling outage schedule windows of approximately 18 months or 24 months (based on reactor type). If for some reason the schedule

	window shifts by even a few days, an issue of potential non-compliance could occur for scheduled outage-required tasks. The possibility exists that a nuclear generator may be faced with a potential forced maintenance outage in order to maintain compliance with the proposed standard. For the requirements with a maximum allowable interval that vary from months to years (including 18 Months surveillance activities), the SDT should consider an allowance for NRC-licensed generating units to default to existing Operating License Technical Specification Surveillance Requirements if there is a maintenance interval that would force shutting down a unit prematurely or face non-compliance with a PRC-005 required interval. Therefore, at a minimum, maintenance intervals should include an allowance for any equipment specifically controlled within each licensee's plant specific Technical Specifications to implement existing Operating License requirements if such a conflict were to occur. 2. Additionally we are requesting to have the first phase of implementation extended from 6 months to 1 year. This will provide adequate time for development of documentation, training for all personnel, and testing the implementation of the new process (es).
Response:	Thank you for your comments. 1. The SDT understands that nuclear power plants are licensed and regulated by the NRC, has a general understanding of the role that plant Technical Specifications (TS) and associated Surveillance Requirements (SR) play in the facilities' operating licenses, and has tried to be sensitive to potential conflicts between PRC-005-2 and NRC requirements. The SDT believes that the majority of components making up the Protection Systems for in-scope generating facilities as discussed in Section 4.2.5 of the Standard would be considered balance of plant equipment and, therefore, not subject to NRC issued TS and associated SR requirements. While availability of plant auxiliary sources to the plant's safety related equipment is addressed by TS and associated SR requirements, these documents are focused on the effects that the availability of these transformers have on reactor safety rather than specifying maintenance and testing requirements for the Protection Systems for these transformers. The SDT recognizes that some battery systems may serve as a source of DC power to both reactor

	safety systems and to protection systems discussed in Section 4.2.5. The SDT acknowledges that there might be plant TS and SR applicable to these batteries. However, the SDT believes that the 3-month and 18-month inspection requirements called for in PRC-005-2 would be no more onerous than plant TS requirements for routine online safety system battery inspections and, furthermore, would not necessitate a plant outage. The SDT recognizes that the PRC-005-2 requirement for validating battery design capability via battery capacity testing would require a plant outage. However, it is the opinion of the SDT that the maximum allowed battery capacity testing intervals of not to exceed 6 calendar years for vented lead acid or NiCad batteries (not to exceed 3 calendar years for VRLA batteries) could easily be integrated within the plant's routine 18 month to 2 year interval refueling outage schedule. The SDT believes that PRC-005-2 is complimentary to the NRC Maintenance Rule in that PRC-005-2 requirements allow for the leveraging of the entire electrical power industry experience in establishing minimum maintenance activities and maximum allowed maintenance intervals necessary to ensure reliable protection system performance. Please see Supplemental Reference Section 8.4 for further discussion for the SDT's rationale for exclusion of grace periods. Please see FAQ IV.2.C for further discussion of impact of PRC-005-2 testing requirements on power plant outage schedules. The challenge of integrating PRC-005-2 testing requirements with a plant's outage schedule is not unique to nuclear plants. Finally, the SDT notes that an entity may build grace periods into its own PSMP as long as the maximum allowed time intervals of PRC-005-2 are not exceeded. If an entity wishes to build a 25% grace period into its program, it may do so by setting its program maintenance and testing intervals at <80% of the PRC-005-2 maximum allowable time interval. 2. The Implementation Plan for R1 has been modified to 12 months.
Segment:	1, 3, 6
Organization:	Cleco Power LLC, Cleco Utility Group, Cleco Power LLC
Member:	Danny McDaniel, Bryan Y Harper, Matthew D Cripps

Comment:	1. The revised definition to Protection System should include the following exception. "Devices that sense non electrical conditions, such as thermal or transformer sudden pressure relays are not included." The Drafting Team has included this note in the standard, but not in the definition. For consistence across the standards, see PRC-004, which references System Protection, the same definition should be used. 2. See Table 1a, Station dc supply. One of the checks is to verify battery cell-to-cell connection resistance. This is not possible in all battery sets. 3. As written, the standard requires testing of batteries, DC control circuits, etc., of distribution level protection components associated with UFLS and UVLS. This is beyond the scope of the Reliability Standards which should focus on the BES. Only include the UFLS or UVLS relays in the program. 4. Revise M1 to reference Protection System definition.
Response:	Thank you for your comment. 1. The definition of “Protection System” has been modified essentially as you suggest. 2. “Cell” has been replaced with “cell/unit.” 3. The Tables have been rearranged and considerably revised to improve clarity. Please see new Tables 1-4 and 1-5.
Segment:	1
Organization:	BC Transmission Corporation
Member:	Gordon Rawlings
Comment:	1. - Purpose unclear “affecting the reliability of the BES” is open to interpretation should read “applied on or designed to provide protection of the BES” 2. - Monitoring levels (1, 2 and 3) are not clear 3. - Maintenance activities are not well defined 4. - Some utilities base their maintenance program on a fiscal year where all scheduled maintenance for the fiscal year must be completed by the end of the fiscal year. It would take considerable effort to switch to end of calendar year with zero improvement in overall reliability.

	5. - For maintenance scheduled in terms of a number of months, requiring that maintenance be completed by the end of scheduled month does not leave much margin if maintenance is delayed for a legitimate reason.
Response:	Thank you for your comment. 1. The purpose can be general; Requirement R1 is worded as you suggest. 2. The Tables have been rearranged and considerably revised to improve clarity. Please see new Tables 1-1 through 1-5. 3. The Tables have been rearranged and considerably revised to improve clarity. Please see new Tables 1-1 through 1-5. Various sections of the FAQ have provided suggestions about how to conduct the activities in the tables. 4. With the vast array of entities subject to compliance monitoring, it would be very difficult for the ERO to assess compliance for varying "years." Additionally, the SDT understands that most compliance monitors currently request data on a calendar year basis when assessing compliance. 5. The entity is encouraged to schedule the maintenance activities to allow for contingencies.
Segment:	1
Organization:	Associated Electric Cooperative, Inc.
Member:	John Bussman
Comment:	There needs to be grace periods for the battery testing of 3 months. Testing a complete transmission system over 3 states in every 3 months and not be one day past due will b a challenge.
Response:	Thank you for your comment. The 3-month maintenance for station dc supply is comprised of inspections that don't require testing.
Segment:	1, 3, 5
Organization:	Arizona Public Service Co., APS
Member:	Robert D Smith, Thomas R. Glock, Mel Jensen
Comment:	1. The generator Facilities subsections 4.2.5.1 through 5 are too prescriptive and inconsistent with sections 4.2.1 through 4. Recommend this section be limited to description of the function as in the preceding sections. 2. In addition, the associated maintenance activities in Table 1 are too prescriptive.

	3. The activities needed to ensure the reliable service of the relay or device should be left up to the discretion of the utility. One example, due to the change to the Protection System definition and establishing a new PSMP with prescriptive maintenance activities relative to the voltage and current sensing devices has created a situation where data from original or prior verification is not available or not at the interval to meet the data retention requirement. Although, methods of determining the integrity of the voltage and current inputs into the relays were used to ensure reliability of the devices met the utilities performance requirements, they may not meet the interval requirement and would then be considered a violation due to changes in the standard. 4. For data requirements, an initial exemption is recommended for the two recent most recent performances of maintenance activities in the first maintenance interval for this component due to the long maintenance interval, the changes in the standard definitions and the prescriptive maintenance activities. 5. Clarification is needed on "Note 1" in Table 1a, which appears to be used to define a calibration failure. How would it be used in Time Based Maintenance? In PRC-005-2 Attachment A: Criteria for a Performance-Based Protection System Maintenance Program, a calibration failure would be considered an event to be used in determining the effectiveness of Performance Based Maintenance. It is unclear in how it will be used in time based maintenance.
Response:	Thank you for your comment. 1. The SDT believes that transmission lines, UFLS, UVLS, and SPS are clear without additional granularity, but that the additional granularity regarding generation plants is necessary. This is illustrated by numerous questions regarding "what is included for generation facilities" relative to PRC-005-1. 2. FERC Order 693 and the approved SAR assigned the SDT to develop a Standard with maximum allowable intervals and minimum maintenance activities. 3. FERC Order 693 and the approved SAR assigned the SDT to develop a Standard with maximum allowable intervals and minimum maintenance activities. It seems reasonable that you cannot be held accountable for a requirement before it becomes effective. 4. In order that a Compliance Monitor can be assured of compliance, the SDT believes that the Compliance Monitor will need the data of the most recent performance of the maintenance, as well as the data of the preceding one, as well as data to validate that entities have been in compliance since the last audit (or currently, since the beginning of mandatory compliance). The SDT has specified the data retention in the posted Standard to establish this level of documentation. The Tables have been rearranged and considerably revised to improve clarity, and the cited note removed. Please see new

	Tables 1-5.
Segment:	1
Organization:	American Transmission Company, LLC
Member:	Jason Shaver
Comment:	ATC does not support the existing 2nd Draft of PRC-005-2 Standard because it is our opinion that: • There is a high probability that system reliability will be reduced with this revised standard. • The number of unplanned outages due to human error will increase considerably. • Availability of the BES will be reduced due to an increased need to schedule planned outages for test purposes (to avoid unplanned outages due to human error). • To implement this standard, an entity will need to hire additional skilled resources that are not readily available. (May require adjustments to the implementation timeline.) • The cost of implementing the revised standard will approximately double our existing cost to perform this work. ATC requests that relevant reliability performance data (based on actual data and/or lessons learned from past operating incidents, Criteria for Approving Reliability Standards per FERC Order 672) be provided to justify the additional cost and reliability risks associated with functional testing.
Response:	Thank you for your comment. The SDT believes that performing these maintenance activities will benefit the reliability of the BES.
Segment:	1, 5, 6
Organization:	American Electric Power, AEP Service Corp, AEP Marketing
Member:	Paul B. Johnson, Brock Ondayko, Edward P. Cox
Comment:	AEP supports the progress of this draft standard, largely supports much of the elements within. However, we provide the following summary of the comments provided in response to the most recent (2nd) draft, which we suggest the SDT consider. 1. In Table 1a for the component “Station dc Supply (used only for UVLS and UFLS)”, the interval

	prescribed is "(when the associated UVLS or UFLS system is maintained)" and the activity is to "verify the proper voltage of the dc supply". The description of the interval "(when the associated UVLS or UFLS system is maintained)" needs to be changed. Relay personnel do not generally take battery readings. The interval should read “according to the maximum maintenance interval in table 1a for the various types of UFLS or UVLS relays". The testing does not need to be in conjunction with the relay testing, it is only the test interval that is important, although relay operation during relay testing is a good indicator of sufficient voltage of the battery. 2. The monitoring and/or maintenance activities listed for batteries are not appropriate in Tables 1b and 1c. There are no commercial battery monitors that monitor and alarm for electrolyte level of all cells. Why not move the electrolyte level to the 18 month inspection and actually open the possibility of condition monitoring to commercially available devices? Or give an option to do the electrolyte check at other time intervals (perhaps 12 months) by visual electrolyte inspection and still allow the monitoring of other functions on the listed 6 year schedule using condition monitoring. It makes no sense to prescribe an unattainable condition monitoring solution. The way that the tables are written, there is no advantage to use the charger alarms since battery maintenance requirements are not reduced in any way. 3. In regards to "Measures and Data Retention", the measure includes the entire definition of "Protection System". Remove the definition from the measure and let the definition stand alone in the NERC glossary. 4. In regards to Data Retention, this calls for past 2 distinct maintenance records to be kept. Since UFLS interval can be 12 years, this would mean that we would need to keep records for 24 years. This is not realistic and consideration should be given to choosing a reasonable retention threshold. 5. The "Supplementary Reference" and the "Frequently-Asked Questions" document should be combined into a single document. This document needs to be issued as a controlled NERC approved document. AEP suggests that the document be appended to the standard so it is clear that following directions provided by NERC via the document are acceptable, and to avoid an entity being penalized during an audit if the auditor disagrees with the document’s contents. 6. NiCAD batteries should not be treated differently from Lead-Acid batteries. NiCAD battery condition can be detected by trending cell voltage values. Ohmic testing will also trend battery conditions and locate failed cells (although will usually lag behind cell voltages). A required load test is detrimental to the NiCAD

	manufacturer's business, and will definitely hurt the NiCAD business for T&D applications. Historically NiCADs may have been put into service because of greater reliability, smaller space constraints, and wider temperature operation range. “Individual cell state of charge” is a bad term because it implies specific gravity testing. Specific gravity cannot be measured automatically (without voiding battery warranty or using an experimental system), and when it is measured, it is unreliable due to stratification of the electrolyte and differing depths of electrolyte taken for samples. “Battery state of charge” can be verified by measuring float current. Once the charging cycle is over the battery current drops dramatically, and the battery is on float, signaling that the battery has returned to full state of charge. This is an appropriate measure for Level 3 monitoring as float current monitoring is a commercially viable option and electrolyte level monitoring is not. 7. In Table 2b, why is Ohmic testing required if the battery terminal resistance is monitored? Cell to cell and battery terminal resistance should not be monitored because they will be taken in 18 month intervals. This further supports the argument that the battery charger alarms would be sufficient for level 2 monitoring, while keeping an 18 month requirement for Ohmic testing, electrolyte level verification, and battery continuity (state of charge). Automatic monitoring of the float current should be sufficient for level 3 monitoring as it gives state of charge of the string, and battery continuity (detect open cells). Shorted cells will still be found during the Ohmic testing and a greater interval is sufficient to locate these problems.
Response:	Thank you for your comment. 1. The Tables have been rearranged and considerably revised to improve clarity. Please see new Table 1-5. 2. The Tables have been rearranged and considerably revised to improve clarity. Please see new Table 1-5. 3. The SDT modified the Measure as you suggested. 4. In order that a Compliance Monitor can be assured of compliance, the SDT believes that the Compliance Monitor will need the data of the most recent performance of the maintenance, as well as the data of the preceding one, as well as data to validate that entities have been in compliance since the last audit (or currently, since the beginning of mandatory compliance). The SDT has specified the data retention in the posted Standard to establish this level of documentation. The SDT disagrees that the documents should be combined. The Supplementary Reference is a holistic presentation of rationale and basis for the various elements of the Standard – discussing mostly the “what” behind the requirements. The FAQ, on the other hand, presents responses to specific frequently asked questions, and, as such, offers more-focused advice on specific subjects, and is more of an example/how-to discussion. The FAQ is primarily a means of capturing some of the most prevalent comments offered

	on the Standard by various entities, with the SDT's response. The SDT believes that the format of the FAQ is a more effective means of presenting the included information than it would be to include this information within the text of the Supplementary Reference document. 5. The SDT believes that since the IEEE Stationary Battery Committee has determined that VRLA batteries and Ni-Cad batteries are different enough to require separate IEEE Standards (IEEE 1188 and IEEE 1106, respectively), these battery technologies are different enough to be treated separately within PRC-005-2. The SDT has drawn upon these IEEE Standards, as well as other sources (EPRI, etc) to develop the requirements of PRC-005-2. The trending activity cited has not been shown to be effective for Ni-Cad batteries (see FAQ II.5.G), and thus a performance test must be performed; the performance test may take many forms. The Tables have been rearranged and considerably revised to improve clarity, and all references to specific gravity have been removed. Please see new Table 1-4. Determining the "state of charge" by monitoring the float voltage may be relevant to the overall station battery, but does not provide an indication of the condition of individual cells as required within the new Table 1-4. 6. Battery terminal resistance shows the condition of the external connections, but reveals nothing regarding the internal condition of the individual cells. Measuring the internal cell/unit resistance provides an opportunity to trend the cell condition over time by verifying the electrical path through the electrolyte within the battery. The ohmic testing is not intended to look for open cells/units, but instead at the ability of the individual cell/unit to perform properly. The new Table 1-4 clarifies that, if the electrolyte level is monitored, the internal ohmic testing need only be performed every six years. Please see FAQ II.5.B, II.5,C and II.5.D for a discussion about continuity.
Segment:	1
Organization:	Ameren Services
Member:	Kirit S. Shah
Comment:	We commend the SDT for developing a generally clear and well documented second draft. The SDT considered and adopted many industry comments on the first draft. It generally provides a well reasoned and balanced view of Protection System Maintenance, and good justification for its maximum intervals. Ameren generally agrees that this second draft will be beneficial to BES reliability, but several inconsistencies, unclear items, and a couple issues need to be addressed before we will be able to support it. (a)The tables still contain several inconsistencies and items needing clarification

	(b)Implementation of the PSMP must align with the start of a calendar year (c) The expectation of perfection in maintaining the extremely high volume of Protection System parts is inconsistent with accepted engineering practice (a fundamental tenet is that tolerances must be allowed for) (d)The Project 2009-17 interpretation that clarifies the transmission Protection System border must be incorporated. (e)Generating Plant system-connected Station Service transformers should not be included as a Facility because they are serving load.
Response:	Thank you for your comment. a. The Tables have been rearranged and considerably revised to improve clarity. Please see new Table 1-5. b. The SDT Guidelines, which were endorsed by the NERC Standards Committee in April 2009, establishes that proposed effective dates "must be the first day of the first calendar quarter after entities are expected to be compliant." The Implementation Plan is in accordance with these guidelines. c. The NERC criteria for VSLs do not currently permit them to allow some level of non-performance without being in violation. d. When the interpretation (Project 2009-17) is approved, the SDT for PRC-005-2 will consider if the interpretation is appropriate for PRC-005-2 and make associated changes. e. The "load" being served by the Station Service Transformer may be essential to operation of the generating plant, and therefore is not the same as general distribution system load. Therefore, the SDT believes that these system components must remain within the Applicability section of the Standard.
Segment:	3
Organization:	Florida Power Corporation
Member:	Lee Schuster
Comment:	Progress Energy does not believe that the definition should be implemented separately from and prior to the implementation of PRC-005-2. We believe there should be a direct linkage between the definition's effective date to the approval and implementation schedule of PRC-005-2. Since this new definition should be directly

	linked to the proposed revised standard, it would be premature to make this new definition effective prior to the effective date of the new standard. We believe that changes to the maintenance program should be driven by the revision of the PRC standard, not by the revision of a definition.
Response:	Thank you for your comment. When the Board of Trustees was asked to approve an interpretation of PRC-005-1 that was written by the PSMT SDT, the board acknowledged the reliability gap identified by the drafting team caused by the definition of "Protection System" and directed that work to close this reliability gap should be given priority. To close this reliability gap the revised definition must be applied to PRC-005-1 as soon as practical - not years from now. The Implementation Plan now proposes at least 12 months for entities to apply the new definition to PRC-005-1, and that should give entities time to apply the new definition to PRC-005-1.
Segment:	1, 3, 5, 6
Organization:	Bonneville Power Administration
Member:	Donald S. Watkins, Rebecca Berdahl, Francis J. Halpin, Brenda S. Anderson
Comment:	Please see BPA's comments submitted during the concurrent formal NERC comment period ending July 16, 2010.
Response:	Thank you for your comment. Please see our responses on the Consideration of Comments from the cited comment period.
Segment:	6
Organization:	Northern Indiana Public Service Co.
Member:	Joseph O'Brien
Comment:	1. It appears that some batteries are not able to accommodate all of the tests required in this standard. 2. The standard also unreasonably requires 100% compliance for millions of protection system components.
Response:	Thank you for your comment. 1. The Tables have been rearranged and considerably revised to improve clarity. Please see new Table 1-4. 2. The NERC criteria for VSLs do not currently permit them to allow some level of non-performance without being in violation.

Segment:	6
Organization:	Lakeland Electric
Member:	Paul Shipps
Comment:	As written, is opens the standard to Technical Feasibility Exceptions due to some batteries not being able to accommodate all of the tests proscribed in the draft standard
Response:	Thank you for your comment. The Tables have been rearranged and considerably revised to improve clarity. Please see new Table 1-4. "Cell" has been replaced with "cell/unit" to address this concern. The Standard only addresses distribution-located devices to the degree that they address BES issues. UFLS and UVLS per the relevant NERC Standards are frequently implemented on the distribution system.
Segment:	4
Organization:	Fort Pierce Utilities Authority
Member:	Thomas W. Richards
Comment:	1. The battery test procedure that calls for intra-cell resistance cannot be performed on batteries that have internal cell-to-cell straps. A brief rewording of the requirement would take care of this. We recommend the minimum requirement be changed to measure the internal resistance at the battery terminal. The reading of individual cells is of little use anyway since a bad reading will result in having to replace the entire jar. 2. The draft standard would cause NERC to regulate through the standards battery testing, DC circuit testing, etc. on distribution elements with no significant improvement to BES reliability, which is beyond the statutory scope of the standards. 3. The standard unreasonably retains the "100% compliance" paradigm for thousands, if not millions of protection system components. The audit becomes an investigation at this point and is not feasible even for mid-sized entities that have hundreds of components subject to this standard.
Response:	Thank you for your comment. 1. The Tables have been rearranged and considerably revised to improve clarity. Please see new Table 1-4. "Cell" has been replaced with "cell/unit" to address this concern. 2. The Standard only addresses distribution-located devices to the degree that they address BES issues. UFLS and UVLS per the relevant NERC Standards are frequently implemented on the distribution system.

	3. The NERC criteria for VSLs do not currently permit them to allow some level of non-performance without being in violation.
Segment:	5
Organization:	PowerSouth Energy Cooperative
Member:	Tim Hattaway
Comment:	The maintenance and testing requirements are too prescriptive and leave little room for an entity to make decisions regarding what type maintenance and testing they deem appropriate. Some of the maintenance and testing methods and intervals as defined in the standard, e.g. the standard calls for a maximum 3 month testing interval for sealed station batteries if performing impedance testing, do not seem to improve reliability at all. The migration from compliance with the present standard to version 2 as prescribed would be a monumental administrative task
Response:	Thank you for your comment. FERC Order 693 and the approved SAR assigned the SDT to develop a Standard with maximum allowable intervals and minimum maintenance activities.
Segment:	5
Organization:	Liberty Electric Power LLC
Member:	Daniel Duff
Comment:	Required tasks are overly prescriptive.
Response:	Thank you for your comment. FERC Order 693 and the approved SAR assigned the SDT to develop a Standard with maximum allowable intervals and minimum maintenance activities.
Segment:	5
Organization:	ExxonMobil Research and Engineering
Member:	Martin Kaufman
Comment:	In the past, NERC has taken care to avoid instructing an entity on how to create its compliance program. The draft standard PRC-005-2 departs from this tradition and partially defines a maintenance and testing program that all entities will be required to follow until such a time that the entity has collected enough data to

	implement the performance based method defined in Attachment A. Additionally, some of the maintenance and testing intervals defined in the tables (e.g. station battery testing) mimic industry recommended test intervals instead of defining maximum acceptable testing intervals.
Response:	Thank you for your comment. FERC Order 693 and the approved SAR assigned the SDT to develop a Standard with maximum allowable intervals and minimum maintenance activities.
Segment:	4
Organization:	Y-W Electric Association, Inc.
Member:	James A Ziebarth
Comment:	From Question 1 on the comment form: Many of the changes to the proposed standard are reasonable and improve the clarity of the standard and its requirements. However, Y-WEA concurs with others on their comments regarding the testing of battery cell-to-cell connection resistance. Many types of stationary batteries are actually blocks of two or more cells that are internally connected. This requirement would necessitate either some sort of feasibility exception process (which, as shown by the TFE process with the CIP standards can be very difficult, cumbersome, and time-consuming to develop and administer) or replacement of the batteries in question, which would pose enormous burdens on small entities that must comply with this standard. The language in this requirement should be changed from “cell-to-cell” to “unit-to-unit” in order to avoid these issues. From Question 7 on the comment form: 1. Y-WEA concurs with others regarding the timing of required battery tests. The IEEE standards referenced indicate target maintenance intervals. In order to remain reasonable, then, this compliance standard needs to allow some buffer between a targeted maintenance and inspection interval and a maximum enforceable maintenance and inspection interval. The suggestion of a four-month maximum window is reasonable and should be incorporated into the standard. 2. Y-WEA is also concerned with R1.1’s language indicating that all components must be identified with no defined “floor” for the significance of a component to the Protection System. The SDT cannot possibly expect that a parts list containing every terminal block, wire and jumper, screw, and lug is going to be maintained with every single part having all the compliance data assigned to it, but without clearly stating this, that is exactly the degree of record-keeping that some overzealous auditor could attempt to hold the registered entity to. The FAQ is much clearer as to what is and is not a component and should be considered

	for the standard. 3. Y-WEA also concurs with others' comments regarding the testing of batteries and DC control circuits associated with UFLS relaying. Many UFLS relays are installed on distribution equipment. Furthermore, many distribution equipment vendors are including UFLS functions in their distribution equipment. For example, many recloser controls incorporate a UFLS function in them. These controls and the reclosers they are attached to, however, are strictly distribution equipment. 16 USC 824o (a)(1) limits the definition of the Bulk-Power System to "not include facilities used in the local distribution of electric energy." A distribution recloser and its control clearly fall into this exclusion. 16 USC 824o (i) (1) prohibits the ERO from developing standards that cover more than the Bulk-Power System. As such, the DC control circuitry and batteries associated with many UFLS relaying installations are precluded from regulation under NERC's reliability standards and may not be included in this standard because they are distribution equipment and therefore not part of the Bulk-Power System. The proposed standard needs to be rewritten to allow for this exclusion and to allow for the testing of only the UFLS function of any distribution class controls or relays.
Response:	Thank you for your comment. From Question 1 - The Tables have been rearranged and considerably revised to improve clarity. Please see new Table 1-4. This element of the table has been modified to state, "Battery internal cell-to-cell or unit-to-unit connection resistance (where available to measure)" to address this comment. From Question 7 – 1. The SDT disagrees. You should complete the activities within the intervals specified. 2. Requirement R1, part 1.1, has been revised to state, "Address all Protection System component types" in consideration of your comment. 3. The Tables have been rearranged and considerably revised to improve clarity. Please see new Tables 1-4 and 1-5.
Segment:	4
Organization:	Old Dominion Electric Coop.
Member:	Mark Ringhausen
Comment:	While the SDT has made progress, there are still some areas that need additional work:

	1. Battery testing of the cell to cell should be unit to unit or some other words for battery system locations that do not allow cell to cell testing. 2. Battery checks on a three months period seems to aggressive and should be moved to six months. 3. Clarify your intent to test the CTs and PTs as some commenters have read it that one does not have to test these pieces of equipment per this standard. 4. Require UFLS and UVLS testing to trip the breaker/recloser when this can be done without tripping of load (by-pass is available).
Response:	Thank you for your comment. 1. The Tables have been rearranged and considerably revised to improve clarity. Please see new Table 1-4. This element of the table has been modified to state, "Battery internal cell-to-cell or unit-to-unit connection resistance (where available to measure)" to address this comment. 2. The SDT disagrees. You should complete the activities within the intervals specified. 3. The Tables have been rearranged and considerably revised to improve clarity. Please see new Table 1-3. 4. The Tables have been rearranged and considerably revised to improve clarity. Please see new Table 1-5.
Segment:	3
Organization:	Springfield Utility Board
Member:	Jeff Nelson
Comment:	Please see SUB's comments on the comment form
Response:	Thank you for your comment. Please see the SDT response in the Consideration of Comments.
Segment:	3
Organization:	Salem Electric
Member:	Anthony Schacher
Comment:	The standard is getting better but leaves to many holes for utilities that do not have specific equipment and would need to file a TFE to exempt their facilities.
Response:	Thank you for your comment. The Tables have been rearranged and considerably revised to improve clarity. Please see new Tables 1-1 through 1-5.

Segment:	3
Organization:	Public Utility District No. 2 of Grant County
Member:	Greg Lange
Comment:	Although this version is a significant improvement in several areas from the past version there are still several things that need clarification or overhaul. 1. We find an inconsistency between the component based approach to version 2 and the way protective systems are maintained. The description of components still needs work as well. 2. It appears that in the new version battery chargers and cables could be professionally judged to be a part of the circuitry. We don't believe this is the intent, but again leaves too much to the imagination of an overzealous auditor. Truly most of our issues are with the definition, but until that is corrected we cannot vote for either.
Response:	Thank you for your comment. 1. A definition of "Component" has been added to the Standard and the Tables have been rearranged and considerably revised to improve clarity. Please see new Tables 1-1 through 1-5. 2. The dc supply component specifically includes battery chargers within the new Table 1-4.
Segment:	3
Organization:	Public Utility District No. 1 of Chelan County
Member:	Kenneth R. Johnson
Comment:	Comments: 1. It is still unclear whether relays that respond to mechanical inputs, such as sudden pressure relays, are included in the proposed definition as protective relays. While PRC-005-2 R1 limits the scope of that particular standard to protection systems that sense electrical quantities, it is remains unclear in other standards that use the defined term whether mechanical input protections are included. 2. We suggest that "Protective Relay" also be defined, and that the definition clearly exclude devices that respond to mechanical inputs in line with the NERC interpretation of PRC-005-1 in response to the CMPWG request.
Response:	Thank you for your comment. 1. The definition of Protection System has been modified to specifically limit it to protective relays that

	respond to electrical quantities. 2. IEEE has provided a definition of protective relay, and the SDT sees no need to repeat or change that definition within this Standard.
Segment:	3, 3
Organization:	Municipal Electric Authority of Georgia, MEAG Power
Member:	Steven M. Jackson, Steven Grego
Comment:	1. Station DC supply testing was set at three months. A six month time based testing interval is reasonable. 2. Maximum maintenance interval for a lead-acid vented battery is listed at six calendar years. This type of test reduces battery life. A 10 to 12 year interval is reasonable. As written this rule would require a TFE that should be administratively unnecessary. 3. Additional clarification is needed in: Control and trip circuits associated with UVLS and UFLS do not require tripping of the breakers but all other protection systems require tripping. Please clarify. 4. Digital relays have electromagnetic output relays - are they categorized as electromechanical or solid state? 5. There needs to be reasonable flexibility based on industry experience in allowing less than 100% perfection in the testing of relays, etc.
Response:	Thank you for your comment. 1. The SDT disagrees. 2. The SDT disagrees. 3. The Tables have been rearranged and considerably revised to improve clarity. Please see new Table 1-5. 4. The Tables have been rearranged and considerably revised to improve clarity. Please see new Table 1-1. 5. The NERC criteria for VSLs do not currently permit them to allow some level of non-performance without being in violation.
Segment:	3, 4, 5
Organization:	Cowlitz County PUD

Member:	Russell A Noble, Rick Syring, Bob Essex
Comment:	Cowlitz agrees with most of the changes; however there are many issues from the last comment round that needs to be addressed with a response from the SDT. In particular, Cowlitz is concerned with the following: 1. Verify Battery cell-to-cell connection resistance" has entered the table where it did not exist before. On some types of stationary battery units, this internal connection is inaccessible. On other types the connections are accessible, but there is no way to repair them based on a bad reading. And bad cell-to-cell connections within units will be detected by the other required tests. This requirement will cause entities to scrap perfectly good batteries just so this test can be performed, with no corresponding increase in bulk electric system reliability while taking an unnecessary risk to personnel and the environment. And because buying battery units composed of multiple cells allows space saving designs, entities may be forced to buy smaller capacity batteries to fit existing spaces. This may end up having a negative effect on reliability. Suggest substituting "unit-to-unit" wherever "cell-to-cell" is used in the table now. 2. The level two table regarding Protection Station dc supply states that level one maintenance activities are to be used, but then goes on to give a list of Maintenance Activities that don't match those in level one; which activities shall Cowlitz use? Same situation for Station DC Supply (battery is not used) where the 18 month interval is missing. 3. IEEE battery maintenance standards call for quarterly inspections. These are targets, though, not maximums. An entity wishing to avoid non-compliance for an interval that might extend past three calendar months due to storms and outages must set a target interval of two months thereby increasing the number of inspections each year by half again. This is unnecessarily frequent. Cowlitz suggests changing the maximum interval for battery inspections to six calendar months. For consistency, Cowlitz also suggests that all intervals expressed as three calendar months be changed to six calendar months. 4. Cowlitz is concerned over R1.1, where all components must be identified, without a definition for the word component or the granularity specified. While the FAQ gives a definition, and allows for entity latitude in determining the granularity, the FAQ is not part of the standard. Cowlitz believes this will allow REs to claim non-compliance for every three inch long terminal jumper wire not identified in a trip circuit path. Cowlitz suggests that the FAQ definitions be included within the standard. 5. Many Distribution Providers do not own Protection Systems on the transmission side that are active devices, but rather are passive in nature, i.e., fuses. This Standard verbiage will make it necessary for all DPs

	to have a PSMP even if they do not own active Protective Systems that at least states that they have a null listing of components. This is useless paperwork.
Response:	Thank you for your comment. 1. The Tables have been rearranged and considerably revised to improve clarity. Please see new Table 1-4. This element of the table has been modified to state, "Battery internal cell-to-cell or unit-to-unit connection resistance (where available to measure)" to address this comment. 2. The Tables have been rearranged and considerably revised to improve clarity. Please see new Table 1-4. 3. The SDT disagrees. You should complete the activities within the intervals specified. 4. Requirement R1, part 1.1, has been revised to state, "Address all Protection System component types" in consideration of your comment. 5. Fuses are not a Protection System component. The SDT is not addressing what an entity that owns no relevant components must do to demonstrate that for compliance.
Segment:	3
Organization:	Consumers Energy
Member:	David A. Lapinski
Comment:	1. If multiple redundant Protection System components, with associated parallel tripping paths, are provided, Table 1a, 1b, and 1c require that each parallel path be maintained, and that the maintenance be documented. Often, these multiple schemes are provided not to meet specific reliability-related requirements, but instead to provide operating flexibility. Testing these likely will require outages, and those outages may result in decreased reliability. Further, the documentation related to maintenance of all paths will be very cumbersome, and will lead to increased compliance exposure simply by its volume. This may perversely lead to entities NOT installing the redundant schemes, resulting in decreased reliability. 2. Many of the activities described in the Tables are not, by themselves, clear. The standard should include sufficient detail such that entities are clear as to what must be done for compliance, rather that relying on supplementary documents for this information. For example, it's not clear, in Table 1a (Station DC Supply), what is meant by, "Verify that the dc supply can perform as designed when the ac power from the grid is not present." Similarly, it isn't clear from the general description within the Tables that components possessing different monitoring attributes within a single scheme may be distinguished such that differing relevant tables

	can be used for the separate components. 3. In Table 1a, Station DC Supply, one of two optional activities is to "Verify that the station battery can perform as designed by evaluating the measured cell/unit internal ohmic values to station battery baseline. Battery assemblies supplied by some manufacturers have the connections made internally, making this option unavailable. Experience with ASME standards show that NERC and SDT members may be jointly and separately liable for litigation by specifying methods that either prefer or prohibit use of certain technologies. 4. Two of the four Maintenance Activities that begin with "Perform a complete functional trip …" conclude with "… does not require actual tripping of circuit breakers or other interrupting devices. Do the other two such activities therefore require tripping of circuit breakers or other interrupting devices? 5. Performance of the minimum activities specified within Table 1a for legacy systems, particularly regarding control circuits, will require considerable disconnection and reconnection of portions of the circuits. Such activities will likely cause far more problems on restoration-to-service than they will locate and correct. We suggest that the SDT reconsider these activities with regard for this concern. 6. We do not agree that Footnotes within the Standard are an appropriate method of providing information that is important to the application of the Standard. Important information should be provided within the standard text.
Response:	Thank you for your comment. 1. The SDT believes that it is important that all parallel paths be maintained within the indicated interval, and the prescribed interval already considers the reliability benefits of parallel tripping paths. 2. The Tables have been rearranged and considerably revised to improve clarity. Please see new Tables 1-1 through 1-5. 3. The use of the term "cell/unit" acknowledges that individual cells may not be accessible, but that assemblies of several cells (into units) may be available instead, and may be used to address this requirement. An acceptable baseline value and follow-on tests may be acceptable for the entire station battery as a single unit. 4. The Tables have been rearranged and considerably revised to improve clarity. Please see new Table 1-5.

	5. The Tables have been rearranged and considerably revised to improve clarity. Please see new Table 1-5. To the degree that performance history for the components within these systems is available, a performance-based program per R3 and Attachment A may be useful in these cases. 6. The SDT removed all footnotes from the Standard.
Segment:	5
Organization:	Consumers Energy
Member:	James B Lewis
Comment:	1. If multiple redundant Protection System components, with associated parallel tripping paths, are provided, Table 1a, 1b, and 1c require that each parallel path be maintained, and that the maintenance be documented. Often, these multiple schemes are provided not to meet specific reliability-related requirements, but instead to provide operating flexibility. Testing these likely will require outages, and those outages may result in decreased reliability. Further, the documentation related to maintenance of all paths will be very cumbersome, and will lead to increased compliance exposure simply by its volume. This may perversely lead to entities NOT installing the redundant schemes, resulting in decreased reliability. 2. Many of the activities described in the Tables are not, by themselves, clear. The standard should include sufficient detail such that entities are clear as to what must be done for compliance, rather that relying on supplementary documents for this information. For example, it's not clear, in Table 1a (Station DC Supply), what is meant by, "Verify that the dc supply can perform as designed when the ac power from the grid is not present." Similarly, it isn't clear from the general description within the Tables that components possessing different monitoring attributes within a single scheme may be distinguished such that differing relevant tables can be used for the separate components. 3. In Table 1a, Station DC Supply, one of two optional activities is to "Verify that the station battery can perform as designed by evaluating the measured cell/unit internal ohmic values to station battery baseline. Battery assemblies supplied by some manufacturers have the connections made internally, making this option unavailable. Experience with ASME standards show that NERC and SDT members may be jointly and separately liable for litigation by specifying methods that either prefer or prohibit use of certain technologies. 4. Two of the four Maintenance Activities that begin with "Perform a complete functional trip …" conclude with "… does not require actual tripping of circuit breakers or other interrupting devices. Do the other two

	such activities therefore require tripping of circuit breakers or other interrupting devices? 5. Performance of the minimum activities specified within Table 1a for legacy systems, particularly regarding control circuits, will require considerable disconnection and reconnection of portions of the circuits. Such activities will likely cause far more problems on restoration-to-service than they will locate and correct. We suggest that the SDT reconsider these activities with regard for this concern. 5. We do not agree that Footnotes within the Standard are an appropriate method of providing information that is important to the application of the Standard. Important information should be provided within the standard text. 6. As for the definition, it is unclear whether "voltage and current sensing inputs" include the instrument transformer itself, or does it pertain to only the circuitry and input to the protective relays. 7. As for the definition, it is not clear what is included in the component, "station dc supply" without referring to other documents (the posted Supplementary Reference and/or FAQ) for clarification. The definition should be sufficiently detailed to be clear. 8. If Protection Systems trip via AC methods, are those systems and the associated control circuitry included in the definition and within the requirements of the Standard as expressed within the Tables?
Response:	Thank you for your comment. 1. The SDT believes that it is important that all parallel paths be maintained within the indicated interval, and the prescribed interval already considers the reliability benefits of parallel tripping paths. 2. The Tables have been rearranged and considerably revised to improve clarity. Please see new Tables 1-1 through 1-5. 3. The use of the term "cell/unit" acknowledges that individual cells may not be accessible, but that assemblies of several cells (into units) may be available instead, and may be used to address this requirement. An acceptable base-line value and follow-on tests may be acceptable for the entire station battery as a single unit. 4. The Tables have been rearranged and considerably revised to improve clarity. Please see new Table 1-5.

	5. The Tables have been rearranged and considerably revised to improve clarity. Please see new Table 1-5. To the degree that performance history for the components within these systems is available, a performance-based program per R3 and Attachment A may be useful in these cases. 6. The SDT removed all footnotes from the Standard. 7. The SDT removed all footnotes from the Standard. 8. "Control circuitry" has been revised to remove "dc" to generalize it such that "ac" tripping would be included.
Segment:	4
Organization:	Consumers Energy
Member:	David Frank Ronk
Comment:	1. If multiple redundant Protection System components, with associated parallel tripping paths, are provided, Table 1a, 1b, and 1c require that each parallel path be maintained, and that the maintenance be documented. Often, these multiple schemes are provided not to meet specific reliability-related requirements, but instead to provide operating flexibility. Testing these likely will require outages, and those outages may result in decreased reliability. Further, the documentation related to maintenance of all paths will be very cumbersome, and will lead to increased compliance exposure simply by its volume. This may perversely lead to entities NOT installing the redundant schemes, resulting in decreased reliability. 2. Many of the activities described in the Tables are not, by themselves, clear. The standard should include sufficient detail such that entities are clear as to what must be done for compliance, rather that relying on supplementary documents for this information. For example, it's not clear, in Table 1a (Station DC Supply), what is meant by, "Verify that the dc supply can perform as designed when the ac power from the grid is not present." Similarly, it isn't clear from the general description within the Tables that components possessing different monitoring attributes within a single scheme may be distinguished such that differing relevant tables can be used for the separate components. 3. In Table 1a, Station DC Supply, one of two optional activities is to "Verify that the station battery can perform as designed by evaluating the measured cell/unit internal ohmic values to station battery baseline. Battery assemblies supplied by some manufacturers have the connections made internally, making this option unavailable. Experience with ASME standards show that NERC and SDT members may be jointly and

	separately liable for litigation by specifying methods that either prefer or prohibit use of certain technologies. 4. Two of the four Maintenance Activities that begin with "Perform a complete functional trip …"conclude with "… does not require actual tripping of circuit breakers or other interrupting devices. Do the other two such activities therefore require tripping of circuit breakers or other interrupting devices? 5. Performance of the minimum activities specified within Table 1a for legacy systems, particularly regarding control circuits, will require considerable disconnection and reconnection of portions of the circuits. Such activities will likely cause far more problems on restoration-to-service than they will locate and correct. We suggest that the SDT reconsider these activities with regard for this concern. 6. In the Standard, Footnote 2 and Footnote 3 are identical. We presume that some information has been omitted. 7. We do not agree that Footnotes are an appropriate method of providing information that is important to the application of the Standard. Important information should be provided within the standard text.
Response:	Thank you for your comment. 1. The SDT believes that it is important that all parallel paths be maintained within the indicated interval, and the prescribed interval already considers the reliability benefits of parallel tripping paths. 2. The Tables have been rearranged and considerably revised to improve clarity. Please see new Tables 1-1 through 1-5. 3. The use of the term "cell/unit" acknowledges that individual cells may not be accessible, but that assemblies of several cells (into units) may be available instead, and may be used to address this requirement. An acceptable base-line value and follow-on tests may be acceptable for the entire station battery as a single unit. 4. The Tables have been rearranged and considerably revised to improve clarity. Please see new Table 1-5. 5. The Tables have been rearranged and considerably revised to improve clarity. Please see new Table 1-5. To the degree that performance history for the components within these systems is available, a performance-based program per R3 and Attachment A may be useful in these cases.

	6. The SDT removed all footnotes from the Standard. 7. The SDT removed all footnotes from the Standard.
Segment:	3
Organization:	City of Bartow, Florida
Member:	Matt Culverhouse
Comment:	The draft standard requires testing and maintenance on DC circuits of distribution systems that have no effect on the reliability of the BES which we feel is outside of the bounds of the original intent of NERC.
Response:	Thank you for your comment. The Tables have been rearranged and considerably revised to improve clarity. Please see new Table 1-5.
Segment:	2
Organization:	Midwest ISO, Inc.
Member:	Jason L Marshall
Comment:	We are abstaining because a number of our stakeholders do not agree with the definition of Protection Systems and inclusion of UFLS and UVLS in a standard dealing with maintenance of protection systems.
Response:	Thank you for your comment. FERC Order 693 suggests combining these Standards, as does the approved SAR for this project. The Tables have been rearranged and considerably revised to improve clarity. Please see new Tables 1-4 and 1-5 for the constrained activities regarding UFLS and UVLS.
Segment:	8
Organization:	Roger C Zaklukiewicz
Member:	Roger C Zaklukiewicz
Comment:	There in insufficient clarity on the Protection System components that are considered Transmission Protection System equipment which require a Distribution Provider (DP) to perform the required maintenance and testing to ensure compliance with the Standard. In certain distribution substations, components of the high voltage source that supply the distribution substation may be considered components of the Electric Bulk System and their associated protection and control systems must be specified, installed, maintained and tested in accordance with the Standard. Clear delineation of Transmission Protection Systems is therefore critical to ensure the reliability of the EPS.

Response:	Thank you for your comment. This is properly a concern regarding your regional BES definition, and the SDT is unable to respond to these concerns.
Segment:	10
Organization:	Northeast Power Coordinating Council, Inc.
Member:	Guy V. Zito
Comment:	1. There is not enough clarity on whether a Distribution Provider (DP) will be able to clearly identify which protection system components it does own and needs to maintain. Many DPs own and/or operate equipment identified in the existing or proposed definition. However, not all such equipment translates into a transmission Protection System. The definition needs clarification on when such equipment is a part of the transmission protection system. 2. Also, the time provided for the first phase "at least six months" is too open ended and does not provide entities with a clear timeline. It is suggested that one year is appropriate for the first phase phasing out the second year in stages. 3. Regarding battery visuals, the suggestion for consideration is it should be changed from 3 months to 6 months. Electrolyte levels of today's lead-calcium batteries are relatively stable for a 6 month period compared to lead-antimony batteries used in the past. 4. The Implementation plan is too short - In many instances it will be impossible to meet, especially if entities have to create, purchase and adopt new databases to track maintenance activities. Often new procedures will have to be written and additional resources justified and hired. It would be more acceptable if a staged approached was taken similar to the DME Standard. 5. Accounting for every component of a protection system will be an enormous overhead and will take away resources from actually doing maintenance. Emphasis should be on systems and not individual components. 6. The Standard does not provide a grace period if an entity is unable to meet the maintenance requirement for extenuating circumstances. For example if an entity has to divert maintenance resources to storm restoration following a major event, slack built into a maintenance program can be eaten up and put the maintenance over the prescribed period. Provision should be made for a mitigation plan to get back on track. We do not believe the reliability of the Bulk Electric System will be compromised if an entities' maintenance

	program slips by a few months due to extreme contingencies, especially if it is brought back on track within a short time frame.
Response:	Thank you for your comment. 1. This is an issue related to the regional BES definition, and the DP needs to consider their equipment in the context of this definition. 2. This comment appears to be related to the Implementation Plan for the definition (which was independent to the Standard), not to the Standard. 3. The SDT disagrees; these activities should be completed as prescribed in the Standard. 4. A staged Implementation Plan is provided for all activities that have prescribed maximum allowable intervals over one year. However, the SDT believes that a staged Implementation Plan for developing the PSMP is impractical, in that an entity cannot reasonably implement a plan until they have developed it. 5. The SDT believes that the only alternative to these criteria is to provide a binary VSL, which would mean that any non-compliance would be Severe. A definition of Component and Component Types have been added to the Standard, and Requirement R1, part 1.1, has been revised to state, "Address all Protection System component types" to assist in this task. 6. "Grace periods" within the Standard are not measurable, and would probably lead to persistently increasing intervals. However, an entity may establish an internal program with grace-period allowance, as long as the entire program (including grace periods) does not exceed the intervals within the Standard.
Segment:	1, 3
Organization:	Hydro One Networks, Inc.
Member:	Ajay Garg, Michael D. Penstone
Comment:	Hydro One is casting a negative vote for the following reasons: 1. There is not enough clarity on whether a Distribution Provider (DP) will be able to clearly identify which protection system components it does own and needs to maintain. Many DPs own and/or operate equipment identified in the existing or proposed definition. However, not all such equipment translates into a transmission Protection System. 2. The proposed definition of Protection System needs clarification on when such equipment is a part of

	the transmission protection system. Emphasis should be on systems and not individual components. 3. The time provided for the first phase "at least six months" is too open ended and does not provide entities with a clear timeline. It would be more acceptable if a staged approach was taken. 4. The Standard does not provide a grace period if an entity is unable to meet the maintenance requirement for extenuating circumstances. For example if an entity has to divert maintenance resources to storm restoration following a major event, slack built into a maintenance program can be eaten up and put the maintenance over the prescribed period. Provision should be made for a mitigation plan to get back on track. We do not believe the reliability of the Bulk Electric System will be compromised if an entities' maintenance program slips by a few months due to extreme contingencies, especially if it is brought back on track within a short time frame. 5. Table 1a: UFLS/UVLS DC control and trip circuits – Due to the distributed nature of this program, random failures to trip are not impactive to the overall operation of the UFLS protection. There should be no requirement to check the DC portion of these protections any more often than the DC circuit checks associated with that LV breaker. 6. Table 1c: some of the proposed maintenance intervals for station DC supply are too stringent and they would not produce significant increase in reliability to justify associated incremental expenditure.
Response:	Thank you for your comment. 1. This is an issue related to the regional BES definition, and the DP needs to consider their equipment in the context of this definition. 2. This is an issue related to the regional BES definition, and the DP needs to consider their equipment in the context of this definition. It seems that Protection Systems logically need to be maintained on a Component level; definitions of Component and Component Type have been added to assist. 3. This comment appears to be related to the Implementation Plan for the definition (which was independent to the Standard), not to the Standard. 4. “Grace periods” within the Standard are not measurable, and would probably lead to persistently increasing intervals. However, an entity may establish an internal program with grace-period allowance, as long as the entire program (including grace periods) does not exceed the intervals within the Standard. 5. The Tables have been rearranged and considerably revised to improve clarity. Please see new Table

	1-5 for constrained activities related to UFLS/UVLS. 6. The Tables have been rearranged and considerably revised to improve clarity. Please see new Table 1-4.
Segment:	1, 1, 3, 6
Organization:	Consolidated Edison Co. of New York, Northeast Utilities, Consolidated Edison Co. of New York, Consolidated Edison Co. of New York
Member:	Christopher L de Graffenried, David H. Boguslawski, Peter T Yost, Nickesha P Carrol
Comment:	1. There is not enough clarity on whether a Distribution Provider (DP) will be able to clearly identify which protection system components it does own and needs to maintain. Many DPs own and/or operate equipment identified in the existing or proposed definition. However, not all such equipment translates into a transmission Protection System. The definition needs clarification on when such equipment is a part of the transmission protection system. 2. Also, the time provided for the first phase "at least six months" is too open ended and does not provide entities with a clear timeline. It is suggested that one year is appropriate for the first phase phasing out the second year in stages.
Response:	Thank you for your comment. 1. This is an issue related to the regional BES definition, and the Distribution Provider needs to consider their equipment in the context of this definition. 2. This comment appears to be related to the Implementation Plan for the definition (which was independent to the Standard), not to the Standard.
Segment:	3
Organization:	Allegheny Power
Member:	Bob Reeping
Comment:	The draft standard expects 100% compliance for millions of protection system components at all times. The standard should consider a statistically based performance metric instead of a performance target that expects 100% compliance.
Response:	Thank you for your comment. The NERC criteria for VSLs do not currently permit them to allow some level

	of non-performance without being in violation.
Segment:	1, 1, 3, 6
Organization:	Keys Energy Services, Lakeland Electric, Lakeland Electric, Florida Municipal Power Pool
Member:	Stan T. Rzad, Larry E Watt, Mace Hunter, Thomas E Washburn
Comment:	1. As written, is opens up the PRC-005 standard to Technical Feasibility Exceptions because some batteries are not able to accommodate all of the tests proscribed in the draft standard. 2. The draft standard would cause NERC to regulate through the standards battery testing, DC circuit testing, etc. on distribution elements with no significant improvement to BES reliability, which is beyond the statutory scope of the standards 3. The standard unreasonably retains the "100% compliance" paradigm for thousands, if not millions of protection system components.
Response:	Thank you for your comment. 1. The Tables have been rearranged and considerably revised to improve clarity. Please see new Table 1-4. This element of the table has been modified to state, “Battery internal cell-to-cell or unit-to-unit connection resistance (where available to measure)” to address this comment. 2. The Standard only addresses distribution-located devices to the degree that they address BES issues. UFLS and UVLS per the relevant NERC Standards are frequently implemented on the distribution system. 3. The NERC criteria for VSLs do not currently permit them to allow some level of non-performance without being in violation.
Segment:	1
Organization:	Gainesville Regional Utilities
Member:	Luther E. Fair
Comment:	1. As written, is opens up the PRC-005 standard to Technical Feasibility Exceptions because some batteries are not able to accommodate all of the tests proscribed in the draft standard as explained by Steve Alexanderson in a prior e-mail to the ballot pool. 2. The draft standard would cause NERC to regulate through the standards battery testing, DC circuit testing,

	etc. on distribution elements with no significant improvement to BES reliability, which is beyond the statutory scope of the standards. 3. The standard unreasonably retains the "100% compliance" paradigm for thousands, if not millions of protection system components. These comments are the same as provided by FMPA which we support.
Response:	Thank you for your comment. 1. The Tables have been rearranged and considerably revised to improve clarity. Please see new Table 1-4. This element of the table has been modified to state, “Battery internal cell-to-cell or unit-to-unit connection resistance (where available to measure)” to address this comment. 2. The Standard only addresses distribution-located devices to the degree that they address BES issues. UFLS and UVLS per the relevant NERC Standards are frequently implemented on the distribution system. 3. The NERC criteria for VSLs do not currently permit them to allow some level of non-performance without being in violation.
Segment:	1, 4, 5
Organization:	Lake Worth Utilities, Florida Municipal Power Agency, Florida Municipal Power Agency
Member:	Walt Gill, Frank Gaffney, David Schumann
Comment:	1. As written, is opens up the PRC-005 standard to Technical Feasibility Exceptions because some batteries are not able to accommodate all of the tests proscribed in the draft standard 2. The draft standard would cause NERC to regulate through the standards battery testing, DC circuit testing, etc. on distribution elements with no significant improvement to BES reliability, which is beyond the statutory scope of the standards 3. The standard unreasonably retains the "100% compliance" paradigm for thousands, if not millions of protection system components. 4. Will the Standard Introduce Technical Feasibility Exceptions to PRC Standards? A large proportion of the batteries (as high as 50% as reported by some SMEs) are not able to accommodate all of the tests prescribed in the draft standard. Will this necessitate the introduction of TFEs into the process unnecessarily? 5. The Standard Reaches beyond the Statutory Scope of the Reliability Standards As written, the

	standard requires testing of batteries, DC control circuits, etc., of distribution level protection components associated with UFLS and UVLS. UFLS and UVLS are different than protection systems used to clear a fault from the BES. An uncleared fault on the BES can have an Adverse Reliability Impact and hence; the focus on making sure the fault is cleared is important and appropriate. However, a UFLs or UVLS event happens after the fault is cleared and is an inexact science of trying to automatically restore supply and demand balance (UFLS) or restore voltages (UVLS) to acceptable levels. If a few UFLS or UVLS relays fail to operate out of potentially thousands of relays with the same function, there is no significant impact to the function of UFLS or UVLS. Hence, there is no corresponding need to focus on every little aspect of the UFLS or UVLS systems. Therefore, the only component of UFLS or UVLS that ought to be focused on in the new PRF-005 standard is the UFLS or UVLS relay itself and not distribution class equipment such as batteries, DC control circuitry, etc., and these latter ought to be removed from the standard. 6. In addition, most distribution circuit are radial without substation arrangements that would allow functional testing without putting customers out of service while the testing was underway, or at least without momentary outages while customers were switched from one circuit to another. Therefore, as written, we would be sacrificing customer service for a negligible impact on BES reliability. 7. Perfection is Not A Realistic Goal The standard allows no mistakes. Even the famous six sigma quality management program allows for defects and failures (i.e., six sigma is six standard deviations, which means that statistically, there are events that fall outside of six standard deviations). PRC-005 has been drafted such that any failure is a violation, e.g., 1 day late on a single relay test of tens of thousands of relays is a violation. That is not in alignment with worldwide accepted quality management practices (and also makes audits very painful because statistical, random sampling should be the mode of audit, not 100% review as is currently being done in many instances). FMPA suggests considering statistically based performance metrics as opposed to an unrealistic performance target that does not allow for any failure ever. Due to the sheer volume of relays, with 100% performance required, if the standards remain this way, PRC-005 will likely be in the top ten most violated standards for the forever. There is a fundamental flaw in thinking about reliability of the BES. We are really not trying to eliminate the risk of a widespread blackout; we are trying to reduce the risk of a widespread blackout. We plan and operate the system to single and credible double contingencies and to finite operating and planning reserves. To eliminate the risk, we would need to plan and operate to an infinite number of contingencies, and have an infinite reserve margin, which is infeasible. Therefore, by definition, there is a finite risk of a widespread blackout that we are trying to reduce, not eliminate, and, by definition, by planning and operating to single and credible double

	contingencies and finite operating and planning reserves, we are actually defining the level of risk from a statistical basis we are willing to take. With that in mind, it does not make sense to require 100% compliance to avoid a smaller risk (relays) when we are planning to a specified level of risk with more major risk factors (single and credible double contingencies and finite planning and operating reserves).
Response:	Thank you for your comment. 1. The Tables have been rearranged and considerably revised to improve clarity. Please see new Table 1-4. This element of the table has been modified to state, "Battery internal cell-to-cell or unit-to-unit connection resistance (where available to measure)" to address this comment. 2. The Standard only addresses distribution-located devices to the degree that they address BES issues. UFLS and UVLS per the relevant NERC Standards are frequently implemented on the distribution system. 3. The NERC criteria for VSLs do not currently permit them to allow some level of non-performance without being in violation. 4. No. The Tables have been rearranged and considerably revised to improve clarity. Please see new Table 1-4. This element of the table has been modified to state, "Battery internal cell-to-cell or unit-to-unit connection resistance (where available to measure)" to address this comment. 5. The Standard only addresses distribution-located devices to the degree that they address BES issues. UFLS and UVLS per the relevant NERC Standards are frequently implemented on the distribution system. 6. The Standard does not require functional testing, although it may be the most practical method of completing some of the required activities. There are other methods, too, of completing these. 7. The NERC criteria for VSLs do not currently permit them to allow some level of non-performance without being in violation.
Segment:	4
Organization:	Illinois Municipal Electric Agency
Member:	Bob C. Thomas
Comment:	IMEA is supportive of the intent of PRC-005-2; however, based on monitoring of comments submitted to date, IMEA would like to see concerns addressed before voting to affirm this proposed standard revision. IMEA supports the comments expressed during ballot pool communications that provisions need to be included to avoid the possible necessity of having to use the burdensome TFE process and to avoid the

	unrealistic expectation of perfection in recordkeeping and exactness of maintenance schedule dates.
Response:	Thank you for your comment. Responses have been provided to the various ballot comments.
Segment:	1
Organization:	Georgia Transmission Corporation
Member:	Harold Taylor, II
Comment:	The SDT has made significant changes to the minimum maintenance activities and maximum allowable intervals within Tables 1a, 1b, and 1c, particularly related to station dc supply and dc control circuits. Do you agree with these changes? If not, please provide specific suggestions for improvement. Comments: 1. Do not agree with the 3 calendar months interval and suggest using quarterly. Both terms require a minimum of four inspections per year have proven to be successful, but the term "quarterly" provides a bit more flexibility than the term "3 calendar months". Given a 3 month maximum interval an entity would need to schedule these tasks every 2 months. 2. As the current requirements are written in R1 of PRC-005-2 Draft, we disagree with the terms identify all Protection System components. We recommend a less prescriptive requirement as listed below. R1.1 Identify BES substations or facilities containing Protection Systems. R1.2 Identify whether Protection Systems per substation or facilities are addressed through time-based, condition-based, performance based or a combination based etc. R1.3 For each substation/facility with Protection Systems include all maintenance activities etc. 3. Listing each individual Protection System component as current draft is onerous and impedes any interpretation of application with very little value. 4. The standard as written will require a great deal of effort by the utilities to maintain 100% compliance as listed. The concern is the power system design allows for some contingencies but the standard allows for no errors. Failing to complete 1% of the maintenance by 1 day infers an entity is out of compliance or in violation. The violations should start for more than a level of 5% not identified, or not maintained. 5. We feel the minor changes of wording as described in R1.1 – R1.3 as listed above will go a long way in

	removing the concerns of the standard. We feel the intent of the standard is sound and request minor changes to facilitate an interpretable standard that sensibly mitigates problems with the BES. As the standard written, the interpretation seems to create a stringent environment with undue compliance requirements. 6. Lastly, the SDT should attempt to embrace Gerry Cauley's vision of "results-based standards" and clearly identify the "risk mitigation objectives, reliability result or outcome" of the revised requirements and allow each entity to meet the outcome and mitigate the risk without writing in such a prescriptive manner which is not preferred. The prescriptive details currently proposed in the standard could then be captured in a reference document.
Response:	Thank you for your comment. 1. The SDT disagrees. Once per calendar quarter would allow up to six months between inspections, while three calendar months limits the effective interval to four months (minus 2 days). 2. Modifying Requirement R1 as you suggest would make it so general that it would be difficult to measure for compliance. Additionally, because of the variety of types of component within a substation, it may be difficult to define a substation-wide (or facility-wide) PSMP that addresses all components and intervals. A definition of Component has been added to the Standard, and Requirement R1, part 1.1, has been revised to state, "Address all Protection System component types". 3. A definition of Component has been added to the Standard to assist; also, Requirement R1, part 1.1, has been revised to state, "Address all Protection System component types" in consideration of your comment. 4. The NERC criteria for VSLs do not currently permit them to allow some level of non-performance without being in violation. 5. As noted above, the SDT believes that Requirement R1 would no longer be measurable. 6. The SDT agrees that the SDT may effectively embrace the "results-based" approach within this Standard; however, doing so at this time would delay development of this high-priority Standard. This is reflected on pages 13-14 of the current draft Standards Development Plan that is out for comment at this time.
Segment:	3, 4
Organization:	Georgia System Operations Corporation
Member:	R Scott S. Barfield-McGinnis, Guy Andrews

Comment:	1. Do not agree with the 3 calendar months interval and suggest using quarterly. Both terms require a minimum of four inspections per year have proven to be successful, but the term "quarterly" provides a bit more flexibility than the term "3 calendar months". Given a 3 month maximum interval an entity would need to schedule these tasks every 2 months. 2. As the current requirements are written in R1 of PRC-005-2 Draft, we disagree with the terms identify all Protection System components. We recommend a less prescriptive requirement as listed below. -R1.1 Identify BES substations or facilities containing Protection Systems. -R1.2 Identify whether Protection Systems per substation or facilities are addressed through time-based, condition-based, performance based or a combination based etc. -R1.3 For each substation/facility with Protection Systems include all maintenance activities etc. 3. The VRF for R1 ranking should be lower or no greater than R2, R3, and R4. The task of identifying Protection System components has very little to do with increasing reliability of the BES. The implementation of the PSMP most likely will cover all the specific functions of Protection System components although the entity failed to identify all PS components. We recommend the above language changes and agree the requirement adds some value but not a high-risk value to the BES. 4. After correcting the language we feel that a requirement of 100% maintenance on 100% of all components as listed on page 6 of the standard for the VSLs leaves no room for error for systems designed with contingences. The violations should start for more than a level of 5% not identified, not maintained, etc. 5. Listing each individual Protection System component as current draft is onerous and impedes any interpretation of application with very little value. The standard as written will require a great deal of effort by the utilities to maintain 100% compliance as listed. The concern is the power system design allows for some contingencies but the standard allows for no errors. Failing to complete 1% of the maintenance by 1 day infers an entity is out of compliance or in violation. The violations should start for more than a level of 5% not identified, or not maintained. 6. We feel the minor changes of wording as described in R1.1 – R1.3 as listed above will go a long way in removing the concerns of the standard. We feel the intent of the standard is sound and request minor changes to facilitate an interpretable standard that sensibly mitigates problems with the BES. As the standard written, the interpretation seems to create a stringent environment with undue compliance requirements.

	7. Lastly, the SDT should attempt to embrace Gerry Cauley's vision of "results-based standards" and clearly identify the "risk mitigation objectives, reliability result or outcome" of the revised requirements and allow each entity to meet the outcome and mitigate the risk without writing in such a prescriptive manner which is not preferred. The prescriptive details currently proposed in the standard could then be captured in a reference document.
Response:	Thank you for your comment. 1. The SDT disagrees. Once per calendar quarter would allow up to six months between inspections, while three calendar months limits the effective interval to four months (minus 2 days). 2. Modifying Requirement R1 as you suggest would make it so general that it would be difficult to measure for compliance. Additionally, because of the variety of types of component within a substation, it may be difficult to define a substation-wide (or facility-wide) PSMP that addresses all components and intervals. A definition of Component has been added to the Standard, and Requirement R1, part 1.1, has been revised to state, "Address all Protection System component types". 3. The VRFs have been revised. 4. The NERC criteria for VSLs do not currently permit them to allow some level of non-performance without being in violation. 5. A definition of Component has been added to the Standard to assist; also, Requirement R1, part 1.1, has been revised to state, "Address all Protection System component types" in consideration of your comment. 6. As noted above, the SDT believes that Requirement R1 would no longer be measurable. 7. The SDT agrees that the SDT may effectively embrace the "results-based" approach within this Standard; however, doing so at this time would delay development of this high-priority Standard. This is reflected on pages 13-14 of the current draft Standards Development Plan that is out for comment at this time.
Segment:	1, 3, 6
Organization:	FirstEnergy Energy Delivery, FirstEnergy Solutions, Kevin Querry
Member:	Robert Martinko, Kevin Querry, Mark S Travaglianti
Comment:	Please see FE comments for suggested enhancements submitted via the parallel comment period for this standard.

Response:	Thank you for your comment. Please see the SDT response in the Consideration of Comments.
Segment:	1, 3, 5, 6
Organization:	Entergy Corporation, Entergy, Entergy Corporation, Entergy Services, Inc.
Member:	George R. Bartlett, Joel T Plessinger, Stanley M Jaskot, Terri F Benoit
Comment:	The following are the reasons associated with our Negative Ballot. 1. Table 1a contains "Type of Protection System Component" entry "Control and trip circuits with electromechanical trip or auxiliary contacts (except for microprocessor relays, UFLS or UVLS)". However, there is no Component entry for the exception (except for microprocessor relays, UFLS or UVLS). Please add a Component entry with associated intervals and activities for: "Control and trip circuits with electromechanical trip or auxiliary contacts" with a microprocessor relay application. 2. The term "check" has replaced "verify" for some maintenance activities. Replace "verify" with "check" in all locations in the Tables. 3. Redefine "verification" to "A means of determining or checking that the component is functioning properly or maintenance correctable issues are identified". 4. We support this project and believe it is a positive step towards BES reliability. However, we believe the draft document needs additional work as per our comments. Also, as indicated by the amount of industry input on the last version draft comments, we believe revisions are still needed to properly address this technically complex standard. 5. If this standard is to deviate from the original project schedule and follow a fast track timeline for approval, then we disagree with the 3 month implementation for Requirement 1 and ask for at least 12 months. The original schedule provided sufficient advance notice to work on an implementation plan and it included the typical time required for NERC Board of Trustees and regulatory approvals. If the project schedule and typical NERC Board of Trustees and regulatory approval times are to be accelerated, the implementation plan should be extended. We reserve the right to include selected reasons submitted by other Negative balloters for their Negative Ballot.
Response:	Thank you for your comment. 1. The Tables have been rearranged and considerably revised to improve clarity. Please see new Table

	1-5. 2. The Tables have been rearranged and considerably revised to improve clarity. Please see new Table 1-5. 3. "Check" is not an element of the PSMP definition. This term, throughout the tables, has been replaced with whatever term of the definition is relevant. 4. Thank you. 5. The Implementation Plan for Requirement R1 has been revised from three months to twelve months.
Segment:	1
Organization:	Empire District Electric Co.
Member:	Ralph Frederick Meyer
Comment:	It is still unclear whether relays that respond to mechanical inputs, such as sudden pressure relays, are included in the proposed definition as protective relays. While PRC-005-2 R1 limits the scope of that particular standard to protection systems that sense electrical quantities, it is remains unclear in other standards that use the defined term whether mechanical input protections are included. We suggest that "Protective Relay" also be defined, and that the definition clearly exclude devices that respond to mechanical inputs in line with the NERC interpretation of PRC-005-1 in response to the CMPWG request.
Response:	Thank you for your comment. The Protection System definition has been revised to explicitly include only protective relays that respond to electrical quantities. This definition applies to all uses of this term within NERC Standards. The SDT feels that the IEEE definition of protective relay is adequate and sees no need to either repeat or change that definition.
Segment:	1
Organization:	Colorado Springs Utilities
Member:	Paul Morland
Comment:	CSU offers the following comments: With BES still not defined it is difficult to determine what the standard applies to. Requirements are confusing at times, making the standard difficult to audit.
Response:	Thank you for your comment. This concern is a BES concern, and the SDT is unable to address or resolve it.
Segment:	1

Organization:	Avista Corp.
Member:	Scott Kinney
Comment:	Avista has the following comments: 1. The modified definition of Protection System now refers to “functions” rather than “devices.” What are the “functions?” This new term adds confusion without being defined in the standard. 2. Considering all the time spent by Regional Entities and utilities discussing what is meant by monthly, quarterly, annual, etc., this standard should clearly define a Calendar Year and Calendar Month to eliminate any confusion. 3. In general, the requirements of the Standard are very prescriptive and granular which seem counter to the newly adopted NERC philosophy of implementing “performance-based” or “results-based” standards. Specifically, the relay testing requirements are very extensive and not entirely practical when it comes to conducting actual breaker tripping for testing. Also, there are now different maintenance and testing requirements for station batteries depending on the type of battery in service. What’s the real added reliability to the BES to add this complexity to the maintenance program? Considering these observations, is there some real historical research that has gone into determining these requirements? In general, how did the drafting team arrive at the maximum allowable maintenance and testing intervals for inclusion in the Standard, i.e., what is the technical basis for their decisions regarding this?
Response:	Thank you for your comment. 1. “Functions” acknowledge that, while protective relays (or protective devices) is the most common implementation, other devices are now used (particularly in SPSs) that provide these functions from other than traditional relays. 2. A “calendar year” is a single number year on the Gregorian calendar; a calendar month is any one of the twelve months within a single calendar year. Please see Section 8.3 of the Supplementary Reference document. 3. Please see Section 8.3 of the Supplemental Reference document for a discussion of the determination of relay and communications system intervals. For the other components, the SDT studied other sources such as IEEE standard, EPRI documents, visited with various industry experts (such as within IEEE), conducted informal surveys of existing practices, and adjusted to conform to concerns such as generator outage intervals.
Segment:	3

Organization:	Central Lincoln PUD
Member:	Steve Alexanderson
Comment:	1. The SDT has made significant changes to the minimum maintenance activities and maximum allowable intervals within Tables 1a, 1b, and 1c, particularly related to station dc supply and dc control circuits. Do you agree with these changes? If not, please provide specific suggestions for improvement. 0 Yes X No Comments: We agree with most of the changes from the last draft. However, the phrase "Verify Battery cell-to-cell connection resistance" has entered the table where it did not exist before. On some types of stationary battery units, this internal connection is inaccessible. On other types the connections are accessible, but there is no way to repair them based on a bad reading. And bad cell-to-cell connections within units will be detected by the other required tests. This requirement will cause entities to scrap perfectly good batteries just so this test can be performed, with no corresponding increase in bulk electric system reliability while taking an unnecessary risk to personnel and the environment. And because buying battery units composed of multiple cells allows space saving designs, entities may be forced to buy smaller capacity batteries to fit existing spaces. This may end up having a negative effect on reliability. Suggest substituting "unit-to-unit" wherever "cell-to-cell" is used in the table now. 2. The SDT has included VRFs and Time Horizons with this posting. Do you agree with the assignments that have been made? If not, please provide specific suggestions for improvement. X Yes 0 No Comments: 3. The SDT has included Measures and Data Retention with this posting. Do you agree with the assignments that have been made? If not, please provide specific suggestions for improvement. X Yes 0 No Comments: 4. The SDT has included VSLs with this posting. Do you agree with the assignments that have been made? If not, please provide specific suggestions for change. 0 Yes X No Comments: It is possible that a component that failed to be individually identified per R1.1 was included by entity A's maintenance plan. This documentation issue gets a higher VSL than entity B that identified a component without maintaining it. We suggest the R1 VSL be change to Low, since we believe lack of maintenance to be more severe than documentation issues. 5. The SDT has revised the "Supplementary Reference" document which is supplied to provide supporting discussion for the Requirements within the standard. Do you agree with the changes? If not, please provide

	specific suggestions for change. X Yes 0 No Comments: 6. The SDT has revised the "Frequently-Asked Questions" (FAQ) document which is supplied to address anticipated questions relative to the standard. Do you agree with these changes? If not, please provide specific suggestions for change. X Yes 0 No Comments: 7. If you have any other comments on this Standard that you have not already provided in response to the prior questions, please provide them here. Comments: The level 2 table regarding Protection Station dc supply states that level 1 maintenance activities are to be used, but then goes on to give a list of Maintenance Activities that don't match those in level 1. Which activities shall we use? 8. Same situation for Station DC Supply (battery is not used) where the 18 month interval is missing. IEEE battery maintenance standards call for quarterly inspections. These are targets, though, not maximums. An entity wishing to avoid non-compliance for an interval that might extend past three calendar months due to storms and outages must set a target interval of two months thereby increasing the number of inspections each year by half again. This is unnecessarily frequent. We suggest changing the maximum interval for battery inspections to 4 calendar months. For consistency, we also suggest that all intervals expressed as 3 calendar months be changed to 4 calendar months. 9. We are concerned over R1.1, where all components must be identified, without a definition for the word component or the granularity specified. While the FAQ gives a definition, and allows for entity latitude in determining the granularity, the FAQ is not part of the standard. We believe this will allow REs to claim non-compliance for every three inch long terminal jumper wire not identified in a trip circuit path. We suggest that the FAQ definitions be included within the standard.
Response:	Thank you for your comment. 1. The Tables have been rearranged and considerably revised to improve clarity. Please see new Table 1-4. This element of the table has been modified to state, "Battery internal cell-to-cell or unit-to-unit connection resistance (where available to measure)" to address this comment. 2. Thank you. 3. Thank you. 4. Requirement R1, part 1.1, has been revised to state, "Address all Protection System component types" and the VSL for Requirement R1 modified in consideration of your comment.

	5. Thank you. 6. Thank you. 7. The Tables have been rearranged and considerably revised to improve clarity. Please see new Table 1-4. 8. The SDT disagrees; the components should be maintained as specified within the new tables. 9. Requirement R1, part 1.1, has been revised to state, "Address all Protection System component types" in consideration of your comment. Definitions were also added to the Standard for Component Type and Component.
Segment:	3, 5, 6
Organization:	Lincoln Electric System
Member:	Bruce Merril, Dennis Florom, Eric Ruskamp
Comment:	LES would like to thank the Drafting Team for its time and effort in developing the standard. However, the standard as currently drafted raises concern as it relates to the identification of all Protection System components. LES asks the Drafting Team to further examine the impact of implementing such a rigorous maintenance program that could potentially impose unnecessary burden and reliability risk with an overly prescriptive approach. Redundancy has been implemented in great detail throughout the history of protection systems to ensure they function as intended. In addition to the comments submitted through the MRO NSRS group comment form, LES would like to further emphasize the following points of contention: (1) Consider revising to consider maintenance activities on a communications channel basis in which intermediate device functioning can be verified by sending a signal from one relay to another. (2) R1, the statement "or are designed to provide protection for the BES" re-opens the argument about transformer protection or breaker failure protection for transformer high-side breakers tripping BES breakers being included in transmission protection systems. (3) Table 1b "breaker trip coil, each auxiliary relay, and each lockout relay" should be changed from a 6 to 12 year interval similar to relay input and outputs. Experience has shown that these both have similar reliability. (4) Include a detailed example of an Inventory List for voltage and current sensing input. (5) Remove "proper functioning of" from the maintenance activities for voltage and current sensing inputs.

	One is not verifying the functionality of the signals. (6) Clarify why control circuitry is stated separately such as in "Control and trip circuits". This implies that close circuit DC paths are not subjects a PSMP when reclosing and closing of breakers have never before been considered part of a Protection System.
Response:	Thank you for your comment. 1. The Tables have been rearranged and considerably revised to improve clarity. Please see new Table 1-2. Functional end-to-end testing would be one method of completing the necessary verification. 2. This is an issue regarding your regional BES definition, and this SDT is unable to resolve such issues. 3. The SDT believes that mechanical solenoid-operated devices share performance attributes (and failure modes) with electromechanical relays and need to be tested at similar intervals. Performance-Based maintenance is an option to increase the intervals if the performance of these devices supports those intervals. 4. The SDT does not understand this comment. The Protection System definition has been changed; perhaps this will help. 5. The Tables have been rearranged and considerably revised to improve clarity. Please see new Table 1-3. **6.** This component of the definition is stated to apply as "associated with protective functions" and thus excludes close/reclosing circuits. Please see FAQ II.1.A.
Segment:	4
Organization:	Madison Gas and Electric Co.
Member:	Joseph G. DePoorter
Comment:	1. The six implementation plan is too quick for some entities. A 1 year implementation is recommended. 2. With the addition of all UFLS in this standard, it is implied battery testing, DC circuit testing, etc. on distribution elements are part of the BES. This may lead to every wire and component to be classified as being a part of the BES.
Response:	Thank you for your comment. 1. This comment appears to be focused on the Implementation Plan for the definition, not for the Standard.

	2. The Tables have been rearranged and considerably revised to improve clarity. Please see new Tables 1-4 and 1-5 for simplified maintenance activities relevant to UFLS.
Segment:	8
Organization:	SPS Consulting Group Inc.
Member:	Jim R Stanton
Comment:	1. I share the concerns expressed by FMPA that the overly prescriptive battery testing requirements will require a TFE process that would be tedious to manage. The standard goes far beyond the scope of Reliability Standards to protect the BES. Reliability Standards should state "what" needs to be done, not "how" to do it. Such overly prescriptive requirements blunt the development of superior and more efficient processes by the industry. 2. Table 1a column "Maintenance Activity" should be renamed "Suggested Maintenance Activity". 3. Tables 1a, b, and c should be reference documents and not referred to in the Requirements. This is especially true since we find terms like "where applicable" and "physical condition" in the tables that forces the Registered Entity to make judgment calls that may not align with the judgment of the auditors. This will mean more interpretation requests and will make the standard extremely difficult to audit as the Registered Entities and auditors compare their "judgments."
Response:	Thank you for your comment. 1. The Tables have been rearranged and considerably revised to improve clarity. Please see new Table 1-4. This element of the table has been modified to state, “Battery internal cell-to-cell or unit-to-unit connection resistance (where available to measure)” to address this comment. The SDT has prescribed “what,” not “how,” except for those rare cases where it is necessary to specify both. 2. The “activities” in the Tables are required, not suggested. 3. The Tables have been rearranged and considerably revised to improve clarity. Please see new Tables 1-1 through 1-5. These Tables are made requirements by incorporation within Requirement R4, part 4.1, and therefore are not reference documents. They are created in response to FERC Order 693 and the approved SAR which assigned the SDT to develop a Standard with maximum allowable intervals and minimum maintenance activities.
Segment:	10
Organization:	Midwest Reliability Organization

Member:	Dan R. Schoenecker
Comment:	"The MRO's NERC Standards Review Subcommittee believes the proposed implementation plan for R1 is unreasonably short. It proposes that: "Entities shall be 100% compliant on the first day of the first calendar quarter three months following applicable regulatory approvals, or in those jurisdictions where no regulatory approval is required, on the first day of the first calendar quarter six months following Board of Trustees adoption." We believe the implementation periods should be expanded to twice what was proposed in the implementation plan due to the sheer volume of equipment that will need to meet compliance. Thus, we propose an alternate implementation plan for requirement R1, "Entities shall be 100% compliant on the first day of the first calendar quarter six months following applicable regulatory approvals, or in those jurisdictions where no regulatory approval is required, on the first day of the first calendar quarter twelve months following Board of Trustees adoption."
Response:	Thank you for your comment. The Implementation Plan for Requirement R1 has been modified from three months to twelve months in consideration of your comment.
Segment:	4
Organization:	Alliant Energy Corp. Services, Inc.
Member:	Kenneth Goldsmith
Comment:	The Implementation Plan is unreasonably short, for the number of assets. The time period should be doubled to be more practicable.
Response:	Thank you for your comment. The Implementation Plan for Requirement R1 has been modified from three months to twelve months in consideration of your comment.
Segment:	1, 3, 5, 6
Organization:	Manitoba Hydro
Member:	Michelle Rheault, Greg C Parent, Mark Aikens, Daniel Prowse
Comment:	The proposed timelines are not reasonable. See submitted comments.
Response:	Thank you for your comment. Please see the SDT response in the Consideration of Comments.
Segment:	10
Organization:	Western Electricity Coordinating Council
Member:	Louise McCarren

Comment:	Lack of clarity or apparent conflict between certain requirements would make compliance assessment difficult.
Response:	Thank you for your comment.
Segment:	1
Organization:	Clark Public Utilities
Member:	Jack Stamper
Comment:	My negative vote reflects the ambiguity and over-stepping issues discussed in many of the comments.
Response:	Thank you for your comment. Please see the SDT response in the Consideration of Comments.
Segment:	1, 3, 5, 6
Organization:	Kansas City Power & Light Co.
Member:	Michael Gammon, Charles Locke, Scott Heidtbrink, Thomas Saitta
Comment:	The proposed changes in the Standard are far too prescriptive and do not take into account the multitude of manufacturers equipment by establishing broad maintenance cycles and testing intervals.
Response:	Thank you for your comment.
Segment:	1
Organization:	Public Utility District No. 1 of Chelan County
Member:	Chad Bowman
Comment:	The requirements are confusing and at times seem to be in conflict with or duplicative of other requirements. From a compliance perspective, this confusion would make the standard difficult to interpret for compliance and audit purposes.
Response:	Thank you for your comment. The Requirements and Tables have been rearranged and considerably revised to improve clarity. Please see new Tables 1-1 through 1-5.
Segment:	3
Organization:	Wisconsin Public Service Corp.
Member:	Gregory J Le Grave
Comment:	The standard and associated definitions as written are too vague, which leave room for varying interpretation.

Response:	Thank you for your comment. The Requirements, definitions, and Tables have been rearranged and considerably revised to improve clarity. Please see new Tables 1-1 through 1-5.
Segment:	1, 3
Organization:	Tri-State G & T Association Inc.
Member:	Keith V. Carman, Janelle Marriott
Comment:	Clarification is needed to address the potentially onerous implementation, administration, audit of the proposed revisions.
Response:	Thank you for your comment.
Segment:	5
Organization:	Tenaska, Inc.
Member:	Scott M. Helyer
Comment:	This standard has become too prescriptive and does too much to say "how" instead of "what" to do. Some of the information in the various tables may or may not conflict with manufacturer recommended practices. It is not clear at all whether such detail will lead to an increased level of reliability versus simply having consistency for the sake of consistency.
Response:	Thank you for your comment. The SDT has prescribed “what,” not “how,” except for those rare cases where it is necessary to specify both. Also, FERC Order 693 and the approved SAR assigned the SDT to develop a Standard with maximum allowable intervals and minimum maintenance activities.
Segment:	6
Organization:	Florida Power & Light Co.
Member:	Silvia P Mitchell
Comment:	This standard is too prescriptive and will result in many violations.
Response:	Thank you for your comment. FERC Order 693 and the approved SAR assigned the SDT to develop a Standard with maximum allowable intervals and minimum maintenance activities.
Segment:	9
Organization:	Oregon Public Utility Commission
Member:	Jerome Murray

Comment:	The requirements in the latest draft are confusing and at times seem to be in conflict with other requirements. From a compliance and enforcement perspective, this confusion would make the standard difficult to audit.
Response:	Thank you for your comment. The Requirements, definitions, and Tables have been rearranged and considerably revised to improve clarity. Please see new Table 1-5.
Segment:	1, 6
Organization:	SCE&G
Member:	Henry Delk, Jr., Matt H Bullard
Comment:	While SCE&G believes the majority of the PRC-005-2 standard is ready to be affirmed there are still inconsistencies with areas of the standard that need to be corrected prior to approval. These inconsistencies are addressed in SCE&G's comments which have been submitted for the current draft of this standard.
Response:	Thank you for your comment. Please see the SDT response in the Consideration of Comments.
Segment:	1, 3, 5, 6
Organization:	Xcel Energy, Inc.
Member:	Gregory L Pieper, Michael Ibold, Liam Noailles, David F. Lemmons
Comment:	Xcel Energy believes the standard still contains many aspects that are not clearly understood by entities, including what is needed to demonstrate a compliant PSMP. Comments have been submitted concurrently to NERC via the draft comment response form.
Response:	Thank you for your comment. Please see the SDT response in the Consideration of Comments.
Segment:	8
Organization:	Utility Services LLC
Member:	Brian Evans-Mongeon
Comment:	See filed comments
Response:	Thank you for your comment. Please see the SDT response in the Consideration of Comments.
Segment:	1
Organization:	Baltimore Gas & Electric Company

Member:	John J. Moraski
Comment:	Please refer to BGE comments submitted for Project 2007-17 / PRC-005-2 Draft 2, submitted on 7/16/2010.
Response:	Thank you for your comment. Please see the SDT response in the Consideration of Comments.
Segment:	1, 3, 5, 6
Organization:	Public Service Electric and Gas Co., PSEG Energy Resources & Trade LLC
Member:	Kenneth D. Brown, Jeffrey Mueller, David Murray, James D. Hebson
Comment:	Please reference comments submitted by the PSEG companies on the official comment form for this standard.
Response:	Thank you for your comment. Please see the SDT response in the Consideration of Comments.
Segment:	1, 3, 3, 3, 3, 5
Organization:	Southern Company Services, Inc., Alabama Power Company, Georgia Power Company, Gulf Power Company, Mississippi Power, Southern Company Generation
Member:	Horace Stephen Williamson, Richard J. Mandes, Anthony L Wilson, Gwen S Frazier, Don Horsley, William D Shultz
Comment:	Comments for this ballot are included in the Southern Company submitted comment form - Project 2007-17: Protection System Maintenance and Testing.
Response:	Thank you for your comment. Please see the SDT response in the Consideration of Comments.
Segment:	1
Organization:	Duke Energy Carolina
Member:	Douglas E. Hils
Comment:	Please see our responses in the comment form - thank you.
Response:	Thank you for your comment. Please see the SDT response in the Consideration of Comments.
Segment:	1
Organization:	GDS Associates, Inc.
Member:	Claudiu Cadar
Comment:	All comments included in the NERC comment form

Response:	Thank you for your comment. Please see the SDT response in the Consideration of Comments.
Segment:	3
Organization:	Louisville Gas and Electric Co.
Member:	Charles A. Freibert
Comment:	Comments will be submitte4d under the comment form
Response:	Thank you for your comment. Please see the SDT response in the Consideration of Comments.
Segment:	4, 5
Organization:	Ohio Edison Company, FirstEnergy Solutions
Member:	Douglas Hohlbaugh, Kenneth Dresner
Comment:	Please see FE comments for suggested enhancements submitted via the parallel comment period for this standard
Response:	Thank you for your comment. Please see the SDT response in the Consideration of Comments.
Segment:	5
Organization:	PPL Generation LLC
Member:	Mark A. Heimbach
Comment:	Please see comments submitted by "PPL Supply" on 7/16/10.
Response:	Thank you for your comment. Please see the SDT response in the Consideration of Comments.
Segment:	4
Organization:	Detroit Edison Company
Member:	Daniel Herring
Comment:	1. The definition should clarify whether current and voltage transformers themselves are included. 2. This implementation plan and the one for PRC-005-2 should be consistent.
Response:	Thank you for your comment. 1. These devices are included in the modified definition. This component of the Protection System definition is to generally include this functionality as a part of the Protection System. The detailed applicability of this component within PRC-005-2 is addressed within the Standard.

	2. This comment appears to be addressing the Implementation Plan for the Definition, not for the Standard.
Segment:	9
Organization:	California Energy Commission
Member:	William Mitchell Chamberlain
Comment:	The current proposal does not require coordination within the interconnection. 1. The standard should require the PCs within an interconnection to coordinate a UFLS Design with all other PCs within the interconnection and that the PCs should be required to develop a coordinated interconnection wide UFLS Design. As proposed the standard could conceivably result in as many different UFLS plans within WECC as there are Planning Coordinators. Additionally, the proposed standard fails to address UFLS relays which are currently part of the existing program which are owned by the customer. Recognition of customer owned relays is critical to have a successful program. To assure areas are covered the LSE needs to be included in the Applicability section. A third concern is the proposed standard attempts to establish continent wide frequency-time curves and eliminate discrete set points. This approach fails to recognize the unique characteristics of the four individual interconnections. Frequency-time curves do not allow for specific and defined measurements and will leave individual entities defaulting to the lowest common denominator. If frequency-time curves are intended to define the boundaries, the determination of discrete set points would fall into the hands of the PCs leading to disagreements among entities. In addition, to determine the frequency-time curves through stability and dynamic modeling, one must establish discrete set points. Frequency-time curves are reverse engineering and require justification and correlation to the reliability of the interconnections – no such justification has been provided.
Response:	Thank you for your comment. Your comments appear to be directed to the NERC Standard addressing development of UFLS programs. The Protection System Maintenance and Testing SDT is unable to address these comments.

NERC
NORTH AMERICAN ELECTRIC
RELIABILITY CORPORATION

Consideration of Comments on Initial Ballot of "Protection System" Definition

The PRC-005 Standard Drafting Team thanks all those who participated in the initial ballot for the proposed revision to the definition of the term, "Protection System."

All balloters are advised to review the comments and responses in this report as an aid in determining how to participate in the recirculation ballot.

Based on stakeholder comments, the drafting team refined its proposed definition of Protection System as shown below:

> Protective relays which respond to electrical quantities, communication systems necessary for correct operation of protective functions, voltage and current sensing devices providing inputs to protective relays, station dc supply, and control circuitry associated with protective functions through the trip coil(s) of the circuit breakers or other interrupting devices.

Several comments questioned the reason for implementing the definition of Protection System in advance of implementing the proposed modifications to PRC-005-1. When the Board of Trustees was asked to approve an interpretation of PRC-005-1 that was written by the PSMT SDT, the board acknowledged the reliability gap identified by the drafting team caused by the definition of "protection system" and directed that work to close this reliability gap should be given "priority." To close this reliability gap the BOT has directed that revised definition be applied to PRC-005-1 as soon as practical - not years from now.

Stakeholder comments indicated that applying the expanded scope of the definition of Protection System would to PRC-005-1 would require more than six months and suggested expanding this to 12 months, and the drafting team made this change to the implementation plan. The team adjusted the implementation plan so that entities will have at least twelve months, rather than the six months originally proposed, to apply the new definition of Protection System to PRC-005-1 – Protection System Maintenance and Testing to Requirement R1 of PRC-005-1. The other parts of the implementation plan remain unchanged.

Both clean and redline versions of the definition and the implementation that show the conforming revisions are posted at the following site:

http://www.nerc.com/filez/standards/Protection_System_Maintenance_Project_2007-17.html

If you feel that your comment has been overlooked, please let us know immediately. Our goal is to give every comment serious consideration in this process! If you feel there has been an error or omission, you can contact the Vice President and Director of Standards, Herbert Schrayshuen, at 609-452-8060 or at herb.schrayshuen@nerc.net. In addition, there is a NERC Reliability Standards Appeals Process.[1]

[1] The appeals process is in the Reliability Standards Development Procedures: http://www.nerc.com/standards/newstandardsprocess.html.

Segment:	1
Organization:	International Transmission Company Holdings Corp
Member:	Michael Moltane
Comment:	It should clearly state in the definition or elsewhere in the standard that automatic ground switches intended to protect the BES are to be considered interrupting devices. This is stated in the Supplemental Reference but the Supplemental Reference is not part of the standard.
Response:	The definition does not identify individual types of interrupting devices. It is left to Regional BES definitions to determine if these devices, the system components "protected" by these devices, and their initiating Protection Systems are BES elements.
Segment:	1, 6
Organization:	Cleco Power LLC
Member:	Danny McDaniel, Matthew D Cripps
Comment:	The revised definition to Protection System should include the following exception. "Devices that sense non electrical conditions, such as thermal or transformer sudden pressure relays are not included." For consistence across the standards, see PRC-004, which references System Protection, the same definition should be used.
Response:	The definition has been modified to specify, "Protective relays which respond to electrical quantities".
Segment:	1, 5, 6
Organization:	American Electric Power, AEP Service Corp., AEP Marketing
Member:	Paul B. Johnson, Brock Ondayko, Edward P. Cox
Comment:	1. The term "station" should either be defined or removed from the definition, as it implies transmission and distribution assets while the term "plant" is used to define generation assets. It would suffice to simply refer to the "DC Supply". 2. As written, the implementation plan only specifies a time frame for entities to update their documentation for PRC-005-1 and PRC-005-2 compliance. The implementation plan also needs to give entities a time frame to address any required changes to their documentation for other standards that use the term "Protection System", including but not limited to NUC-001-2, PER-005-1, PRC-001-1, etc.
Response:	1. The term "station" is used in a generic sense to apply to either "substation" or "generation station"

	facilities. 2. An assessment of the changes to the definition (posted with the first comment period), relative to the entire body of other NERC Standards using this defined term, determined that the changes are consistent with the other existing uses of the definition, and that no other implementation plan considerations were necessary. No comments were received relative to this assessment.
Segment:	1
Organization:	Avista Corp.
Member:	Scott Kinney
Comment:	The modified definition of Protection System now refers to "functions" rather than "devices." What are the "functions?" This new term adds confusion without being defined in the standard.
Response:	The "functions" are the accumulated performance of the various portions of the Protection System. This term is used to distinguish "protective functions" from annunciation, signaling, or information.
Segment:	1, 3
Organization:	MidAmerican Energy Co.
Member:	Terry Harbour, Thomas C. Mielnik
Comment:	The following changes should be incorporated in the definition to insure it is used consistently in PRC-005 and any other standards where it appears. The following is a suggested revised definition: "Protection System" is defined as: A system that uses measurements of voltage, current, frequency and/or phase angle to determine anomalies and to trip a portion of the BES to provide protection for the BES and consists of 1) Protective relays for BES elements and, 2) Communications systems necessary for correct BES protection system operations and, 3) Current and voltage sensing devices supplying BES protective relay input and, 4) Station DC supply to BES protection systems excluding battery chargers, and 5) DC control trip paths to the trip coil(s) of the circuit breakers or other interrupting devices for BES

	elements.
Response:	The definition of Protection System establishes "what a Protective System is", not "what it does". The application-related suggestions in the comment are best left to individual standards. The SDT, however, did modify the "protective relays" to include only those that respond to electrical quantities. Additionally, constraining relays to "on BES elements" would necessarily exclude UFLS relays, and "trip a portion of the BES" would exclude SPS and UVLS which are on the BES, but which trip non-BES elements. The SDT also disagrees with excluding battery chargers.
Segment:	3, 5, 6
Organization:	Lincoln Electric System
Member:	Bruce Merrill, Dennis Florom, Eric Ruskamp
Comment:	LES believes the proposed definition of Protection System as written remains open to interpretation. LES offers the following Protection System definition for the SDT's consideration: "Protection System" is defined as: A system that uses measurements of voltage, current, frequency and/or phase angle to determine anomalies and trips a portion of the BES and consists of 1) Protective relays, and associated auxiliary relays, that initiate trip signals to trip coils, 2) associated communications channels, 3) current and voltage transformers supplying protective relay inputs, 4) dc station supply, excluding battery chargers, and 5) dc control trip path circuitry to the trip coils of BES connected breakers, or equivalent interrupting device, and lockout relays.
Response:	The definition of Protection System establishes "what a Protective System is", not "what it does". The application-related suggestions in the comment are best left to individual standards. The SDT, however, did modify the "protective relays" to include only those that respond to electrical quantities. Additionally, constraining relays to "on BES elements" would necessarily exclude UFLS relays, and "trip a portion of the BES" would exclude SPS and UVLS which are on the BES, but which trip non-BES elements. The SDT also

	disagrees with excluding battery chargers.
Segment:	4
Organization:	Madison Gas and Electric Co.
Member:	Joseph G. DePoorter
Comment:	Recommend the following definition "Protection System" is defined as: A system that uses measurements of voltage, current, frequency and/or phase angle to determine anomalies and trips a portion of the BES and consists of 1) Protective relays, and associated auxiliary relays, that initiate trip signals to trip coils, 2) associated communications channels, 3) current and voltage transformers supplying protective relay inputs, 4) dc station supply, excluding battery chargers, and 5) dc control trip path circuitry to the trip coils of BES connected breakers, or equivalent interrupting device, and lockout relays.
Response:	The definition of Protection System establishes "what a Protective System is", not "what it does". The application-related suggestions in the comment are best left to individual standards. The SDT, however, did modify the "protective relays" to include only those that respond to electrical quantities. Additionally, constraining relays to "on BES elements" would necessarily exclude UFLS relays, and "trip a portion of the BES" would exclude SPS and UVLS which are on the BES, but which trip non-BES elements. The SDT also disagrees with excluding battery chargers.
Segment:	1
Organization:	National Grid
Member:	Saurabh Saksena
Comment:	1. National Grid suggests adding "Protection System Components including" in the beginning. This is because the word "components" has been used extensively throughout the standard and there is no mention of what constitutes a protection system component in the standard. The word "component" does find mention in FAQs, however, it is recommended to mention it in the main standard.

	2. Also, National Grid proposes a change in the proposed definition (changing "voltage and current sensing inputs" to "voltage and current sensing devices providing inputs"). The revised definition should read as follows: Protective System Components including Protective relays, communication systems necessary for correct operation of protective functions, voltage and current sensing devices providing inputs to protective relays and associated circuitry from the voltage and current sensing devices, station dc supply, and control circuitry associated with protective functions from the station dc supply through the trip coil(s) of the circuit breakers or other interrupting devices. 3. The time provided for the first phase "at least six months" is too open ended and does not give entities a clear timeline. National Grid suggests 1 year for the first phase. 4. As a result, National Grid suggests phasing out the second phase in stages.
Response:	1. The SDT believes that the suggested text does not add to the definition, and may actually lead to additional problems, such as an implication that the list within the definition is incomplete. 2. The definition has been modified to reflect the proposed change and the "associated circuitry …" has been removed. 3. The implementation plan has been modified to replace "six months" with "twelve months". 4. The SDT does not understand this comment.
Segment:	10
Organization:	Midwest Reliability Organization
Member:	Dan R. Schoenecker
Comment:	1. The MRO's NERC Standards Review Subcommittee believes the proposed protection system definition is unclear specifically as it relates to dc station supply. We would like more clarity as to what is included in the dc station supply. 2. We believe battery chargers should not be included in the definition; if the Standard Drafting Team revises the definition we would ask that Table 1 be adjusted, accordingly
Response:	1. The definition addressing "dc supply" was modified. 2. The SDT believes that battery chargers should be included in the definition. Without proper functioning of battery chargers, the battery will be discharged by normal station dc load, and will be unable to perform its function; also, there are some entities which use a charger to provide the dc supply without use of a battery.
Segment:	4

Organization:	Old Dominion Electric Coop.
Member:	Mark Ringhausen
Comment:	I am voting Yes on the ballot, but I do have a small issue with the wording of 'station DC supply'. In some of our UFLS locations, we are not in a substation, but out on the feeder circuit and utilizing the DC supply on the feeder recloser. I think my reading of this definition would apply to this recloser DC supply as well as the Station DC Supply.
Response:	To the extent that UFLS is implemented within distribution system devices not within substations, the activities and intervals established within the standard would apply.
Segment:	6
Organization:	Northern Indiana Public Service Co.
Member:	Joseph O'Brien
Comment:	It is still not clear whether battery chargers fall under this definition.
Response:	The change to “station dc supply” is intended to expand the definition to include all essential elements including battery chargers.
Segment:	8
Organization:	SPS Consulting Group Inc.
Member:	Jim R Stanton
Comment:	The words in the definition, “...includes one or more of the following activities” are ambiguous and subject to inconsistent interpretation by auditors. Suggest changing the language to, "...at least one of the following activities."
Response:	This comment does not appear to apply to the “Protection System” definition.
Segment:	4
Organization:	Detroit Edison Company
Member:	Daniel Herring
Comment:	1. The definition should clarify whether current and voltage transformers themselves are included. 2. This implementation plan and the one for PRC-005-2 should be consistent.
Response:	1. This portion of the definition has been modified for clarity.

	2. The Implementation Plan for the definition has been modified. The Implementation Plan for the Standard is a separate issue.
Segment:	1
Organization:	BC Transmission Corporation
Member:	Gordon Rawlings
Comment:	The definition excludes mechanical relays (Gas Relays) which may affect the BES
Response:	The definition has been modified to specify, "Protective relays which respond to electrical quantities".
Segment:	1, 3, 4, 5, 6
Organization:	Empire District Electric Co., Cowlitz County PUD, Cowlitz County PUD, Cowlitz County PUD, Florida Municipal Power Pool
Member:	Ralph Frederick Meyer, Russell A Noble, Rick Syring, Bob Essex, Thomas E Washburn
Comment:	1. It is still unclear whether relays that respond to mechanical inputs, such as sudden pressure relays, are included in the proposed definition as protective relays. While PRC-005-2 R1 limits the scope of that particular standard to protection systems that sense electrical quantities, it is remains unclear in other standards that use the defined term whether mechanical input protections are included. 2. We suggest that "Protective Relay" also be defined, and that the definition clearly exclude devices that respond to mechanical inputs in line with the NERC interpretation of PRC-005-1 in response to the CMPWG request.
Response:	1. The definition has been modified to specify, "Protective relays which respond to electrical quantities". 2. "Protective relay" is defined by IEEE and does not have a unique meaning when used in a NERC standard, thus the SDT sees no need to either modify or duplicate that definition.
Segment:	3
Organization:	Central Lincoln PUD
Member:	Steve Alexanderson
Comment:	1. Do you believe the proposed definition of Protection System is ready for ballot? If not, please explain why.

	0 Yes X No Comments: It is still unclear whether relays that respond to mechanical inputs, such as sudden pressure relays, are included in the proposed definition as protective relays. While PRC-005-2 R1 limits the scope of that particular standard to protection systems that sense electrical quantities, it is remains unclear in other standards that use the defined term whether mechanical input protections are included. We suggest that "Protective Relay" also be defined, and that the definition clearly exclude devices that respond to mechanical inputs in line with the NERC interpretation of PRC-005-1 in response to the CMPWG request. 2. Do you agree with the implementation plan for the revised definition of Protection System? The implementation plan has two phases – the first phase gives entities at least six months to update their protection system maintenance and testing program; the second phase starts when the protection system maintenance and testing program has been updated and requires implementation of any additional maintenance and testing associated with the program changes by the end of the first complete maintenance and testing cycle described in the entity's revised program. If you disagree with this implementation plan, please explain why. X Yes 0 No Comments:
Response:	1. The definition has been modified to specify, "Protective relays which respond to electrical quantities". 2. Thank you.
Segment:	3
Organization:	Consumers Energy
Member:	David A. Lapinski
Comment:	1. It is unclear whether "voltage and current sensing inputs" include the instrument transformer itself, or does it pertain to only the circuitry and input to the protective relays. 2. It is not clear what is included in the component, "station dc supply" without referring to other documents (the posted Supplementary Reference and/or FAQ) for clarification. The definition should be sufficiently detailed to be clear. 3. If Protection Systems trip via AC methods, are those systems, and the associated control circuitry included in the definition and within the requirements of the Standard as expressed within the Tables?
Response:	1. The definition has been changed for clarity; the SDT intends that the output of these devices, measured at the relay should properly represent the primary quantities.

	2. There are many possible variations to “station dc supply”. The definition must be sufficiently general such that variations can be included. 3. The definition has been generalized such that ac tripping is included.
Segment:	1, 3, 5
Organization:	Arizona Public Service Co., APS
Member:	Robert D Smith, Thomas R. Glock, Mel Jensen
Comment:	The change to the definition relative to the voltage and current sensing devices is too prescriptive. Methods of determining the integrity of the voltage and current inputs into the relays to ensure reliability of the devices should be up to the discretion of the utility.
Response:	The definition has been changed for clarity; the SDT intends that the output of these devices, measured at the relay should properly represent the primary quantities.
Segment:	4
Organization:	Consumers Energy
Member:	David Frank Ronk
Comment:	1. It is unclear whether “voltage and current sensing inputs” include the instrument transformer itself, or does it pertain to only the circuitry and input to the protective relays? 2. It is not clear what is included in the component, “station dc supply” without referring to other documents (the posted Supplementary Reference and/or FAQ) for clarification. The definition should be sufficiently detailed to be clear. 3. If Protection Systems trip via AC methods, are those systems, and the associated control circuitry included? 4. For entities that may not have included all elements reflected in the modified definition within their PRC-005-1 program, 6-months following regulatory approvals may not be sufficient to identify all relevant additional components, develop maintenance procedures, develop maintenance and testing intervals, develop a defendable technical basis for both the procedures and intervals, and train personnel on the newly implemented items. We propose that a 12-month schedule following regulatory approvals may be more practical.
Response:	1. The SDT made several changes to the definition to improve clarity. The SDT intends that the output of

	these devices, measured at the relay should properly represent the primary quantities. 2. There are many possible variations to “station dc supply”. The definition must be sufficiently general such that variations can be included. 3. The definition has been generalized such that ac tripping is included. 4. The Implementation Plan has been modified to allow a 12-month schedule as suggested. However, to agree with the SDT Guidelines established by NERC, “end of the first calendar quarter” was modified to “first day of the first calendar quarter”.
Segment:	1, 3, 6
Organization:	Consolidated Edison Co. of New York
Member:	Christopher L de Graffenried, Peter T Yost, Nickesha P Carrol
Comment:	1. There is not enough clarity on whether a Distribution Provider (DP) will be able to clearly identify which protection system components it does own and needs to maintain. Many DPs own and/or operate equipment identified in the existing or proposed definition. However, not all such equipment translates into a transmission Protection System. 2. The definition needs clarification on when such equipment is a part of the transmission protection system. 3. Also, the time provided for the first phase "at least six months" is too open ended and does not provide entities with a clear timeline. It is suggested that one year is appropriate for the first phase phasing out the second year in stages.
Response:	1. This issue is properly addressed within the Standard, not within the definition. 2. This issue is properly addressed within the Standard, not within the definition. 3. The Implementation Plan has been modified to allow a 12-month schedule as suggested. However, to agree with the SDT Guidelines established by NERC, “end of the first calendar quarter” was modified to “first day of the first calendar quarter”.
Segment:	1, 3
Organization:	Hydro One Networks, Inc.
Member:	Ajay Garg, Michael D. Penstone
Comment:	The proposed definition of Protection System needs clarification on when such equipment is a part of the

	transmission protection system. Emphasis should be on systems and not individual components.
Response:	This issue is properly addressed within the Standard, not within the definition.
Segment:	4
Organization:	Y-W Electric Association, Inc.
Member:	James A Ziebarth
Comment:	From Question 1 on the comment form: The application of this definition to Reliability Standards NUC-001-2, PER-005-1, PRC-001-1, and PRC-004-1 results in confusion as to whether relays with mechanical inputs are included or excluded from this definition. PRC-005-2_R1 contains language limiting its applicability to relays operating on electrical inputs only, but the remaining standards that rely on this definition are not so specific. This being the case, it would make much more sense to clearly define what devices are actually meant in the glossary definition rather than leaving it up to each individual standard to do so.
Response:	The definition has been modified to specify, “Protective relays which respond to electrical quantities”.
Segment:	1, 3
Organization:	Platte River Power Authority
Member:	John C. Collins, Terry L Baker
Comment:	1. Although the applicable relays to which protective relays are outlined in the NERC PRC-005-2 Protection system Maintenance Draft Supplementary Reference dated May 27, 2010, they are not defined in the NERC Glossary of terms. Until it is clearly defined which relays are included inconsistencies will exists from region to region in their audit approaches and which relays they will be looking at. 2. Also, there is still debate why the protective relays would extend to mechanical devices such as the lock-out relay and tripping for trip-free relays. In our system configuration we risk reliability to customer load by testing the lock-out relays which we feel out weights the benefit of testing devices that we see little to no evidence of failure in.
Response:	1. This is properly an issue for the various Regional BES definitions. 2. The definition does not explicitly include these devices, although they are implicitly part of “control circuitry”.
Segment:	3
Organization:	Public Utility District No. 2 of Grant County

Member:	Greg Lange
Comment:	These systems are not always maintained at the component level, i.e. meggering from the relay input test switch through the cable and the CT. This has not closed all the issues around professional judgment (interpretations) that make us nervous when faced with the human element of an audit. We need more specificity to close that gap.
Response:	This issue is properly addressed within the Standard, not within the definition.
Segment:	1, 3, 5, 6
Organization:	Dominion Virginia Power, Dominion Resources Services, Dominion Resources, Inc., Dominion Resources, Inc.
Member:	John K Loftis, Michael F Gildea, Mike Garton, Louis S Slade
Comment:	The proposed definition introduces ambiguity and we suggest retaining the current definition.
Response:	The existing definition presents ambiguities and gaps which must be addressed in accordance with directives from the NERC BOT. Additionally, the draft definition constrains certain components to remove ambiguities.
Segment:	5
Organization:	Southern Company Generation
Member:	William D Shultz
Comment:	We agree that the definition provides clarity and will enhance the reliability of the Protection Systems to which it is applicable. The negative vote is a result of a belief that the definition's effective date must be coincident with the approval and implementation schedule of PRC-005-2. Since this new definition is directly linked to the proposed revised standard, it would be premature to make this definition effective prior to the effective date of the new standard. If balloted and approved, there is no obligation to or guarantee of any additional maintenance to be performed. PRC-005-2 includes this definition, the maintenance activities, and the intervals that will ensure execution of the maintenance and testing.
Response:	Thank you. When the Board of Trustees was asked to approve an interpretation of PRC-005-1 that was written by the PSMT SDT, the board acknowledged the reliability gap identified by the drafting team caused by the definition of "protection system" and directed that work to close this reliability gap should be given "priority." To close this reliability gap the BOT has directed that revised definition be applied to PRC-005-1 as soon as practical - not years from now. The implementation plan now proposes at least 12 months for entities to apply the new definition to PRC-005-1, and that should give entities time to apply the new

	definition to PRC-005-1.
Segment:	1, 3, 6
Organization:	Great River Energy
Member:	Gordon Pietsch, Sam Kokkinen, Donna Stephenson
Comment:	We agree with the revised Protection System definition. The revised definition should only be applied to PRC-005-2. The revised definition should not be applied to PRC-005-1.
Response:	Thank you. When the Board of Trustees was asked to approve an interpretation of PRC-005-1 that was written by the PSMT SDT, the board acknowledged the reliability gap identified by the drafting team caused by the definition of "protection system" and directed that work to close this reliability gap should be given "priority." To close this reliability gap the BOT has directed that revised definition be applied to PRC-005-1 as soon as practical - not years from now. The implementation plan now proposes at least 12 months for entities to apply the new definition to PRC-005-1, and that should give entities time to apply the new definition to PRC-005-1.
Segment:	5
Organization:	Progress Energy Carolinas
Member:	Wayne Lewis
Comment:	Progress Energy does not believe that the definition should be implemented separately from and prior to the implementation of PRC-005-2. We believe there should be a direct linkage between the definition's effective date to the approval and implementation schedule of PRC-005-2. Since this new definition should be directly linked to the proposed revised standard, it would be premature to make this new definition effective prior to the effective date of the new standard. We believe that changes to the maintenance program should be driven by the revision of the PRC standard, not by the revision of a definition.
Response:	Thank you. When the Board of Trustees was asked to approve an interpretation of PRC-005-1 that was written by the PSMT SDT, the board acknowledged the reliability gap identified by the drafting team caused by the definition of "protection system" and directed that work to close this reliability gap should be given "priority." To close this reliability gap the BOT has directed that revised definition be applied to PRC-005-1 as soon as practical - not years from now. The implementation plan now proposes at least 12 months for entities to apply the new definition to PRC-005-1, and that should give entities time to apply the new definition to PRC-005-1.

Segment:	1
Organization:	Ameren Services
Member:	Kirit S. Shah
Comment:	The implementation of the revised definition and PRC-005-2 PSMP must align on the same date.
Response:	Thank you. When the Board of Trustees was asked to approve an interpretation of PRC-005-1 that was written by the PSMT SDT, the board acknowledged the reliability gap identified by the drafting team caused by the definition of "protection system" and directed that work to close this reliability gap should be given "priority." To close this reliability gap the BOT has directed that revised definition be applied to PRC-005-1 as soon as practical - not years from now. The implementation plan now proposes at least 12 months for entities to apply the new definition to PRC-005-1, and that should give entities time to apply the new definition to PRC-005-1.
Segment:	3
Organization:	Niagara Mohawk (National Grid Company)
Member:	Michael Schiavone
Comment:	1. National Grid does not agree with the proposed implementation plan. The time provided for the first phase "at least six months" is too open ended and does not give entities a clear timeline. National Grid suggests 1 year for the first phase. 2. National Grid also suggests phasing out the second phase in stages.
Response:	1. The Implementation Plan has been modified to replace "six months" with "twelve months". 2. We do not understand your comment.
Segment:	1, 3, 3, 3, 3
Organization:	Southern Company Services, Inc., Alabama Power Company, Georgia Power Company, Gulf Power Company, Mississippi Power
Member:	Horace Stephen Williamson, Richard J. Mandes, Anthony L Wilson, Gwen S Frazier, Don Horsley
Comment:	We agree that the definition provides clarity and will enhance the reliability of the Protection Systems to which it is applicable. However, we feel that there needs to be a direct linkage of the definition's effective date to the approval and implementation schedule of PRC-005-2. Since this new definition is directly linked to the proposed revised standard, it would be premature to make this definition effective prior to the effective date of the new standard.

Response:	Thank you. When the Board of Trustees was asked to approve an interpretation of PRC-005-1 that was written by the PSMT SDT, the board acknowledged the reliability gap identified by the drafting team caused by the definition of "protection system" and directed that work to close this reliability gap should be given "priority." To close this reliability gap the BOT has directed that revised definition be applied to PRC-005-1 as soon as practical - not years from now. The implementation plan now proposes at least 12 months for entities to apply the new definition to PRC-005-1, and that should give entities time to apply the new definition to PRC-005-1.
Segment:	1, 5
Organization:	Entergy Corporation
Member:	George R. Bartlett, Stanley M Jaskot
Comment:	The following are the reasons associated with our Negative Ballot. 1. We agree with the definition, however we do not agree with the implementation plan. We believe implementation of the definition needs to coincide with the implementation of Standard PRC-005-2. To do otherwise, will cause entities to address equipment, documentation, work management process, and employee training changes needed for compliance twice within an unreasonably short timeframe. 2. A 12 month minimum timeframe is need to implement this definition 3. We also reserve the right to include selected reasons submitted by other Negative balloters for their Negative Ballot.
Response:	1. Thank you. 2. The Implementation Plan has been modified to allow a 12-month schedule as suggested. However, to agree with the SDT Guidelines established by NERC, "end of the first calendar quarter" was modified to "first day of the first calendar quarter". When the Board of Trustees was asked to approve an interpretation of PRC-005-1 that was written by the PSMT SDT, the board acknowledged the reliability gap identified by the drafting team caused by the definition of "protection system" and directed that work to close this reliability gap should be given "priority." To close this reliability gap the BOT has directed that revised definition be applied to PRC-005-1 as soon as practical - not years from now. The implementation plan now proposes at least 12 months for entities to apply the new definition to PRC-005-1, and that should give entities time to apply the new definition to PRC-005-1. 3. Thank you.
Segment:	3, 6

Organization:	Entergy
Member:	Joel T Plessinger, Terri F Benoit
Comment:	1. We agree with the definition, however we do not agree with the implementation plan. We believe implementation of the definition needs to coincide with the implementation of Standard PRC-005-2. To do otherwise, will cause entities to address equipment, documentation, work management process, and employee training changes needed for compliance twice within an unreasonably short timeframe. 2. A 12 month minimum timeframe is need to implement this definition
Response:	1. Thank you. 2. The Implementation Plan has been modified to allow a 12-month schedule as suggested. However, to agree with the SDT Guidelines established by NERC, "end of the first calendar quarter" was modified to "first day of the first calendar quarter". When the Board of Trustees was asked to approve an interpretation of PRC-005-1 that was written by the PSMT SDT, the board acknowledged the reliability gap identified by the drafting team caused by the definition of "protection system" and directed that work to close this reliability gap should be given "priority." To close this reliability gap the BOT has directed that revised definition be applied to PRC-005-1 as soon as practical - not years from now. The implementation plan now proposes at least 12 months for entities to apply the new definition to PRC-005-1, and that should give entities time to apply the new definition to PRC-005-1.
Segment:	5
Organization:	U.S. Bureau of Reclamation
Member:	Martin Bauer
Comment:	1. It is unfortunate that the definition did not retain consistency in the terms. As an example, the definition indicates it includes protective relays and communication systems for the correct operation of protective functions. It would have been better to use the term relays instead of the term functions. Now it is unclear what the communication systems are for. 2. The Time Horizons are too narrow for the implementation of the standard as written. The SDT appears to have not accounted for the data analysis associated with performance based systems. The data collection, analysis, and subsequent decisions associated development of a maintenance program and its justification do not occur overnight especially with larger utilities. In addition, this new standard will require complete rewrite of an entities internal maintenance programs. The internal processes associated with these vary based on the

	size of the entity and its organizational structure. Since this standard is so invasive into the internal decisions concerning maintenance, the standard should allow at least 18 months for entities to rewrite their internal maintenance programs to meet the program development requirements and 18 months to train the staff in the new program, incorporate the program into the entities compliance processes, and to implement the new program.
Response:	1. "Functions" was used, as some applications (SPS, for example) may have communications systems that operate other than via protective relays. 2. This comment appears to be focused on the revised Standard, not on the definition.
Segment:	2
Organization:	Midwest ISO, Inc.
Member:	Jason L Marshall
Comment:	We are abstaining because a number of our stakeholders have concerns regarding the definition of Protection System and the inclusion of UVLS and UFLS in a standard dealing with maintenance of protection systems.
Response:	The inclusion of UVLS/UFLS is related to a directive from FERC in Order 693, and to the SAR for this project.
Segment:	1
Organization:	Lakeland Electric
Member:	Larry E Watt
Comment:	An implementation plan should be associated with this definition change.
Response:	An Implementation Plan specifically for the definition is posted.
Segment:	1
Organization:	Clark Public Utilities
Member:	Jack Stamper
Comment:	The proposed definition does not provide the level of clarity that is needed.
Response:	The SDT made several changes to the definition to improve clarity.
Segment:	1
Organization:	Beaches Energy Services

Member:	Joseph S. Stonecipher
Comment:	While better than the last draft, too many problems still exist.
The following series of comments all indicate that the entity has submitted comments via the official comment form.	
Segment:	1, 5, 6
Organization:	Public Service Electric and Gas Co., PSEG Energy Resources & Trade LLC
Member:	Kenneth D. Brown, David Murray, James D. Hebson
Comment:	Please reference comments submitted by the PSEG companies on the official comment form for this standard.
Segment:	1
Organization:	Potomac Electric Power Co.
Member:	Richard J. Kafka
Comment:	PHI submitted comments
Segment:	3
Organization:	Louisville Gas and Electric Co.
Member:	Charles A. Freibert
Comment:	Comments will be submitte4d under the comment form
Segment:	3
Organization:	Bonneville Power Administration
Member:	Rebecca Berdahl
Comment:	Please see BPA's comments submitted during the concurrent formal comment period ending July 16, 2010.
Segment:	1
Organization:	GDS Associates, Inc.
Member:	Claudiu Cadar
Comment:	All comments included in the NERC comment form
Segment:	1, 3, 4, 5, 6
Organization:	FirstEnergy Energy Delivery, FirstEnergy Solutions, FirstEnergy Solutions, Ohio Edison Company,

	FirstEnergy Solutions
Member:	Robert Martinko, Kevin Querry, Kenneth Dresner, Douglas Hohlbaugh, Mark S Travaglianti
Comment:	Please see FE comments for suggested enhancements submitted via the parallel comment period for this definition.
Segment:	1
Organization:	Duke Energy Carolina
Member:	Douglas E. Hils
Comment:	Please see our responses in the comment form - thank you.
Segment:	8
Organization:	Utility Services LLC
Member:	Brian Evans-Mongeon
Comment:	see filed comments
Segment:	5
Organization:	PPL Generation LLC
Member:	Mark A. Heimbach
Comment:	Please see comments submitted by "PPL Supply" on 7/16/10.
From this point on, all comments provided relate to the proposed standard, not to the proposed definition and its implementation plan. Responses to comments submitted with ballots for the standard are included in the comment report for the standard – they are not duplicated here.	
Segment:	1
Organization:	Lake Worth Utilities
Member:	Walt Gill
Comment:	1. As written, is opens up the PRC-005 standard to Technical Feasibility Exceptions because some batteries are not able to accommodate all of the tests proscribed in the draft standard 2. The draft standard would cause NERC to regulate through the standards battery testing, DC circuit testing, etc. on distribution elements with no significant improvement to BES reliability, which is beyond the statutory scope of the standards 3. The standard unreasonably retains the "100% compliance" paradigm for thousands, if not millions of protection

	system components. Will the Standard Introduce Technical Feasibility Exceptions to PRC Standards? a large proportion of the batteries (as high as 50% as reported by some SMEs) are not able to accommodate all of the tests prescribed in the draft standard. Will this necessitate the introduction of TFEs into the process unnecessarily? The Standard Reaches Beyond the Statutory Scope of the Reliability Standards As written, the standard requires testing of batteries, DC control circuits, etc., of distribution level protection components associated with UFLS and UVLS. UFLS and UVLS are different than protection systems used to clear a fault from the BES. An uncleared fault on the BES can have an Adverse Reliability Impact and hence; the focus on making sure the fault is cleared is important and appropriate. However, a UFLs or UVLS event happens after the fault is cleared and is an inexact science of trying to automatically restore supply and demand balance (UFLS) or restore voltages (UVLS) to acceptable levels. If a few UFLS or UVLS relays fail to operate out of potentially thousands of relays with the same function, there is no significant impact to the function of UFLS or UVLS. Hence, there is no corresponding need to focus on every little aspect of the UFLS or UVLS systems. Therefore, the only component of UFLS or UVLS that ought to be focused on in the new PRF-005 standard is the UFLS or UVLS relay itself and not distribution class equipment such as batteries, DC control circuitry, etc., and these latter ought to be removed from the standard. In addition, most distribution circuit are radial without substation arrangements that would allow functional testing without putting customers out of service while the testing was underway, or at least without momentary outages while customers were switched from one circuit to another. Therefore, as written, we would be sacrificing customer service for a negligible impact on BES reliability. Perfection is Not A Realistic Goal The standard allows no mistakes. Even the famous six sigma quality management program allows for defects and failures (i.e., six sigma is six standard deviations, which means that statistically, there are events that fall outside of six standard deviations). PRC-005 has been drafted such that any failure is a violation, e.g., 1 day late on a single relay test of tens of thousands of relays is a violation. That is not in alignment with worldwide accepted quality management practices (and also makes audits very painful because statistical, random sampling should be the mode of audit, not 100% review as is currently being done in many instances). FMPA suggests considering statistically based performance metrics as opposed to an unrealistic performance target that does not allow for any failure ever. Due to the shear volume of relays, with 100% performance required, if the standards remain this way, PRC-005 will likely be in the top ten most violated standards for the forever. There is a fundamental flaw in thinking about reliability of the BES. We are really not trying to eliminate the risk of a widespread blackout, we are trying to reduce the risk of a widespread blackout. We plan and operate the system to single and credible double contingencies and to finite operating and planning reserves. To eliminate the risk, we would need to plan and operate to an infinite number of contingencies, and have an infinite reserve margin, which is infeasible. Therefore, by definition, there is a finite risk of a widespread blackout that we are trying to reduce,

	not eliminate, and, by definition, by planning and operating to single and credible double contingencies and finite operating and planning reserves, we are actually defining the level of risk from a statistical basis we are willing to take. With that in mind, it does not make sense to require 100% compliance to avoid a smaller risk (relays) when we are planning to a specified level of risk with more major risk factors (single and credible double contingencies and finite planning and operating reserves).
Segment:	3, 4, 5
Organization:	Wisconsin Electric Power Marketing, Wisconsin Energy Corp., Wisconsin Electric Power Co.
Member:	James R. Keller, Anthony Jankowski, Linda Horn
Comment:	We Energies does not agree to the implementation plan proposed. While it makes common sense to proceed with R1 prior to proceeding with implementing R2, R3, and R4, the timeline to be compliant for R1 is too short. It will take a considerable amount of resources to migrate the maintenance plan from today's standard to the new standard in phase one. ATC recommends that time to develop and update the revised program be increased to at least one year followed by a transition time for the entity to collect all the necessary field data for the protection system within its first full cycle of testing. (In ATC's case would be 6 years) To address phase two, We Energies believes human and technological resources will be overburdened to implement this revised standard as written. The transition to implementing the new program will take another full testing cycle once the program has been updated. Increased documentation and obtaining additional resources to accomplish this will be challenging. Implementation of PRC-005-2 will impact We Energies in the following manner: a. Increase costs: double existing maintenance costs. b. Since there will be a doubling of human interaction (or more), it is expected that failures due to human error will increase, possibly proportionately. c. Breaker maintenance may need to be aligned with protection scheme testing, which will always contain elements that are include in the non-monitored table for 6 yr testing. d. We Energies is developing standards for redundant bus and transformer protection schemes. This would allow We Energies to test the protection packages without taking the equipment out of service. Further if one system fails, there is full redundancy available. With the current version of PRC-005-2, We Energies would need to take an outage to test the protection schemes for a transformer or a bus, there is not an incentive to install redundant schemes. We Energies is working with a condition based breaker maintenance program. This program's value would be greatly diminished under PRC-005-2 as currently written. Consideration also needs to be given for other NERC standards expected to be passed and in the implementation stage at the same time, such as the CIP standards.
Segment:	4, 5

Organization:	Florida Municipal Power Agency
Member:	Frank Gaffney, David Schumann
Comment:	FMPA recommends a negative vote on PRC-005-2, Project 2007-17, for three significant reasons 1. As written, it opens up the PRC-005 standard to Technical Feasibility Exceptions because some batteries are not able to accommodate all of the tests proscribed in the draft standard as explained by Steve Alexanderson in a prior e-mail to the ballot pool. 2. The draft standard would cause NERC to regulate through the standards battery testing, DC circuit testing, etc. on distribution elements with no significant improvement to BES reliability, which is beyond the statutory scope of the standards 3. The standard unreasonably retains the "100% compliance" paradigm for thousands, if not millions of protection system components. Will the Standard Introduce Technical Feasibility Exceptions to PRC Standards? As described by Steve Alexanderson in a prior e-mail to the ballot pool, a large proportion of the batteries (as high as 50% as reported by some SMEs) are not able to accommodate all of the tests prescribed in the draft standard. Will this necessitate the introduction of TFEs into the process unnecessarily? The Standard Reaches Beyond the Statutory Scope of the Reliability Standards As written, the standard requires testing of batteries, DC control circuits, etc., of distribution level protection components associated with UFLS and UVLS. UFLS and UVLS are different than protection systems used to clear a fault from the BES. An uncleared fault on the BES can have an Adverse Reliability Impact and hence; the focus on making sure the fault is cleared is important and appropriate. However, a UFLs or UVLS event happens after the fault is cleared and is an inexact science of trying to automatically restore supply and demand balance (UFLS) or restore voltages (UVLS) to acceptable levels. If a few UFLS or UVLS relays fail to operate out of potentially thousands of relays with the same function, there is no significant impact to the function of UFLS or UVLS. Hence, there is no corresponding need to focus on every little aspect of the UFLS or UVLS systems. Therefore, the only component of UFLS or UVLS that ought to be focused on in the new PRF-005 standard is the UFLS or UVLS relay itself and not distribution class equipment such as batteries, DC control circuitry, etc., and these latter ought to be removed from the standard. In addition, most distribution circuit are radial without substation arrangements that would allow functional testing without putting customers out of service while the testing was underway, or at least without momentary outages while customers were switched from one circuit to another. Therefore, as written, we would be sacrificing customer service for a negligible impact on BES reliability. Perfection is Not A Realistic Goal The standard allows no mistakes. Even the famous six sigma quality management program allows for defects and failures (i.e., six sigma is six standard deviations, which means that statistically, there are events that fall outside of six standard deviations). PRC-005 has been drafted such that any failure is a violation, e.g., 1 day late on a single relay test of tens of thousands of relays is a violation. That is not in

	alignment with worldwide accepted quality management practices (and also makes audits very painful because statistical, random sampling should be the mode of audit, not 100% review as is currently being done in many instances). FMPA suggests considering statistically based performance metrics as opposed to an unrealistic performance target that does not allow for any failure ever. Due to the shear volume of relays, with 100% performance required, if the standards remain this way, PRC-005 will likely be in the top ten most violated standards for the forever. There is a fundamental flaw in thinking about reliability of the BES. We are really not trying to eliminate the risk of a widespread blackout, we are trying to reduce the risk of a widespread blackout. We plan and operate the system to single and credible double contingencies and to finite operating and planning reserves. To eliminate the risk, we would need to plan and operate to an infinite number of contingencies, and have an infinite reserve margin, which is infeasible. Therefore, by definition, there is a finite risk of a widespread blackout that we are trying to reduce, not eliminate, and, by definition, by planning and operating to single and credible double contingencies and finite operating and planning reserves, we are actually defining the level of risk from a statistical basis we are willing to take. With that in mind, it does not make sense to require 100% compliance to avoid a smaller risk (relays) when we are planning to a specified level of risk with more major risk factors (single and credible double contingencies and finite planning and operating reserves).
Segment:	1
Organization:	Keys Energy Services
Member:	Stan T. Rzad
Comment:	As written, is opens up the PRC-005 standard to Technical Feasibility Exceptions because some batteries are not able to accommodate all of the tests proscribed in the draft standard. The draft standard would cause NERC to regulate through the standards battery testing, DC circuit testing, etc. on distribution elements with no significant improvement to BES reliability, which is beyond the statutory scope of the standards The standard unreasonably retains the "100% compliance" paradigm for thousands, if not millions of protection system components.
Segment:	3
Organization:	Municipal Electric Authority of Georgia
Member:	Steven M. Jackson
Comment:	Station DC supply testing was set at three months. A six month time based testing interval is reasonable. Maximum maintenance interval for a lead-acid vented battery is liste at six calendar years. This type of test

	reduces battery life. A 10 to 12 year interval is reasonable. As written this rule would require a TFE that should be administratively unnecessary. Additional clarification is needed in: Control and trip circuits associated with UVLS and UFLS do not require tripping of the breakers but all other protection systems require tripping. Please clarify. Digital relays have electromagnetic output relays - are they categorized as electromechanical or solid state? There needs to be reasonable flexibility based on industry experience in allowing less than 100% perfection in the testing of relays, etc.
Segment:	1
Organization:	American Transmission Company, LLC
Member:	Jason Shaver
Comment:	ATC does not agree to the implementation plan proposed. While it makes common sense to proceed with R1 prior to proceeding with implementing R2, R3, and R4, the timeline to be compliant for R1 is too short. It will take a considerable amount of resources to migrate the maintenance plan from today's standard to the new standard in phase one. ATC recommends that time to develop and update the revised program be increased to at least one year followed by a transition time for the entity to collect all the necessary field data for the protection system within its first full cycle of testing. (In ATC's case would be 6 years) To address phase two, ATC believes human and technological resources will be overburdened to implement this revised standard as written. The transition to implementing the new program will take another full testing cycle once the program has been updated. Increased documentation and obtaining additional resources to accomplish this will be challenging. Implementation of PRC-005-2 will impact ATC in the following manner: a. Increase costs: double existing maintenance costs. b. Since there will be a doubling of human interaction (or more), it is expected that failures due to human error will increase, possibly proportionately. c. Breaker maintenance may need to be aligned with protection scheme testing, which will always contain elements that are include in the non-monitored table for 6 yr testing. d. ATC is developing standards for redundant bus and transformer protection schemes. This would allow ATC to test the protection packages without taking the equipment out of service. Further if one system fails, there is full redundancy available. With the current version of PRC-005-2, ATC would need to take an outage to test the protection schemes for a transformer or a bus, there is not an incentive to install redundant schemes. ATC is working with a condition based breaker maintenance program. This program's value would be greatly diminished under PRC-005-2 as currently written. Consideration also needs to be given for other NERC standards expected to be passed and in the implementation stage at the same time, such as the CIP standards.
Segment:	1

Organization:	Tucson Electric Power Co.
Member:	John Tolo
Comment:	The mention of communication systems maintenance (M1.) needs more clarity as to the depth of the maintenance required. Also, Table 1a, a 3-month interval to verify that the Protection System communications system is functional is too frequent to be practical.
Segment:	4
Organization:	Fort Pierce Utilities Authority
Member:	Thomas W. Richards
Comment:	The requirement for taking intracell readings is not possible for all batteries. Some minor rewording would resolve this issue and make it applicable to those batteries that have internal cell-to-cell straps. I would recommend changing the minimum requirement to take intracell resistance readings from the battery terminals, since identifying the particular cell that is going bad is of little use. I imagine all utilities replace an entire jar, not individual cells. The draft standard would cause NERC to regulate, through the standards battery testing, DC circuit testing, etc. on distribution elements with no significant improvement to BES reliability, which is beyond the statutary scope of the standards The standard unreasonably retains the "100% compliance" paradigm for thousands, if not millions of protection system components. This becomes an investigation, not an audit. There is no way an audit team will have the time to arrive at 100% compliance with a large entity.
Segment:	1, 3, 6
Organization:	Xcel Energy, Inc.
Member:	Gregory L Pieper, Michael Ibold, David F. Lemmons
Comment:	Xcel Energy believes the standard still contains many aspects that are not clearly understood by entities, including what is needed to demonstrate a compliant PSMP. Comments have been submitted concurrently to NERC via the draft comment response form.
Segment:	1, 3, 5, 6
Organization:	Kansas City Power & Light Co.
Member:	Michael Gammon, Charles Locke, Scott Heidtbrink, Thomas Saitta
Comment:	The proposed changes in the Standard are far too prescriptive and does not take into account the multitude of

	manufacturers equipment by establishing broad maintenance cycles and testing intervals.
Segment:	1
Organization:	SCE&G
Member:	Henry Delk, Jr.
Comment:	While SCE&G believes the majority of the PRC-005-2 standard is ready to be affirmed there are still inconsistencies with areas of the standard that need to be corrected prior to approval. These inconsistencies are addressed in SCE&G's comments which have been submitted for the current draft of this standard.
Segment:	1, 3, 4, 6
Organization:	Seattle City Light
Member:	Pawel Krupa, Dana Wheelock, Hao Li, Dennis Sismaet
Comment:	Functional testing is impractical.
Segment:	6
Organization:	Florida Power & Light Co.
Member:	Silvia P Mitchell
Comment:	This standard is too prescriptive and will result in many violations.
Segment:	5
Organization:	Salt River Project
Member:	Glen Reeves
Comment:	SRP believes the requirements of the Standard are confusing and may be problematic in determining compliance. We also believe the required functional testing of the breaker trip coil may potentially increase maintenance outages of circuit breakers. In most cases, circuit breaker maintenance outages can be coordinated such that Protection System maintenance and testing can be done simultaneously. However, in some cases this may not be possible. Outages of any BES facility whether planned or unplanned can impact system reliability. SRP suggests that trip coil monitoring devices be included as an acceptable means of ensuring the trip coil is functioning properly. This will help to avoid unnecessary outages.
Segment:	3
Organization:	Lakeland Electric

Member:	Mace Hunter
Comment:	The proposed draft may introduce TFEs into the PRC standards, not a good thing. The proposed draft reacheds beyound the statutory scope of the reliability standards. Perfection is not a realistic goal.
Segment:	1
Organization:	PPL Electric Utilities Corp.
Member:	Brenda L Truhe
Comment:	PPL EU is voting negative because Rqmt 1.1 "Identify all Protection System components" is too broad and must be clarified and the definition of Protective Relays is not limited to only those devices that use electrical quantities as inputs (exclude pressure, temperature, gas, etc).
Segment:	1
Organization:	Pacific Gas and Electric Company
Member:	Chifong L. Thomas
Comment:	We are concerned over R1.1, where all components must be identified, without a definition for the word component or the granularity specified. While the FAQ gives a definition, and allows for entity latitude in determining the granularity, the FAQ is not part of the standard. We are concerned whether identification is required for every individual component, such as each auxiliary relay, or is it sufficient that the auxiliary relays are included within the scheme that is being tested and documented. Do the auxiliary relays need to be documented within the maintenance database and/or on the actual test reports of schemes being tested? We suggest that the FAQ definitions be included within the standard.

NERC
NORTH AMERICAN ELECTRIC
RELIABILITY CORPORATION

Consideration of Comments on Non-binding Poll of VRFs and VSLs associated with PRC-005-2 – Protection System Maintenance

The PRC-005 Standard Drafting Team thanks all those who participated in non-binding poll for the VRFs and VSLs associated with PRC-005-2. The initial non-binding poll was conducted from July 8 through July 17, 2010 and achieved a quorum with 85.96 % of the ballot pool members returning an opinion, and with 32.29 % of those indicating support for the proposed VRFs and VSLs.

Many commenters proposed that the VSLs allow for some amount of non-compliance with the Standard before incurring a violation. NERC's guidelines for VSLs do not allow some level of non-performance without being in violation. The SDT did, however, modify the VSLs for Requirements R1 and R4 to provide gradated VSLs.

Some commenters suggested the SDT re-evaluate the VRF assignments. The SDT reconsidered the VRFs in accordance with the guidance provided by NERC and FERC, and modified the Standard to assign the VRFs as R1 – Medium, R2 – Medium, R3 – Medium, and R4 – High. Some commenters made comments that appeared to be related to the technical content of the Standard, not to the VRFs or VSLs and these comments were addressed in the report containing responses to comments on the standard. All comments submitted have been publicly posted on the following web page:

http://www.nerc.com/filez/standards/Protection_System_Maintenance_Project_2007-17.html

If you feel that your comment has been overlooked, please let us know immediately. Our goal is to give every comment serious consideration in this process! If you feel there has been an error or omission, you can contact the Vice President and Director of Standards, Herbert Schrayshuen, at 609-452-8060 or at herb.schrayshuen@nerc.net. In addition, there is a NERC Reliability Standards Appeals Process.[1]

[1] The appeals process is in the Reliability Standards Development Procedures: http://www.nerc.com/standards/newstandardsprocess.html.

Segment:	3, 4, 5
Organization:	Cowlitz County PUD
Member:	Russell A Noble, Rick Syring, Bob Essex
Comment:	Cowlitz does not understand a High VRF designation for requirement R1; this should be a Low or Medium designation. R1 is merely covering a maintenance program, not the actual maintenance. Actual missed maintenance of components (requirement R4) should have the Medium or High VRF. This Standard is very descriptive of minimum maintenance intervals on each "component;" thus, it is possible to have maintenance documentation that is in full compliance once the Program is built around it. It should never be a case where an entity can receive a higher VRF over missing documentation of a process, and then a lower VRF over missing documentation of the implementation of the process.
Response:	The SDT has reconsidered the VRFs in accordance with the guidance provided by NERC and FERC, and the Standard has been modified to assign the VRFs as R1 – Medium, R2 – Medium, R3 – Medium, and R4 – High.
Segment:	1
Organization:	United Illuminating Co.
Member:	Jonathan Appelbaum
Comment:	The VRF for R1 should be Low. It is administrative to create an inventory list. If R1 failed to be executed but the other requirements wee executed fully then the BES would be properly secured. Compare this against the scenario of performing R1 but failing to perform the other tasks; in which case the BES is at risk. UI recognizes that the SDT considers the inventory as the foundation of the PSMP but it is not the element of the PSMP that provides for the level of reliability sought. R1 should be VRF Low and R2 thru R4 VRF is Medium. UI agrees with the Time Horizon.
Response:	The SDT has reconsidered the VRFs in accordance with the guidance provided by NERC and FERC, and the Standard has been modified to assign the VRFs as R1 – Medium, R2 – Medium, R3 – Medium, and R4 – High.

Segment:	1, 3, 4, 5, 6
Organization:	FirstEnergy Energy Delivery, FirstEnergy Solutions, Ohio Edison Company, FirstEnergy Solutions, FirstEnergy Solutions
Member:	Robert Martinko, Kevin Querry, Douglas Hohlbaugh, Kenneth Dresner, Mark S Travaglianti
Comment:	FirstEnergy appreciates the hard work of the drafting team, but unfortunately we must cast a Negative vote for the VRF for Requirement R1. Although we agree that Requirement 1 is important because it establishes a sound PSMP, a HIGH VRF assignment is not appropriate and it should be changed to LOWER. By definition, a requirement with a LOWER VRF is administrative in nature, and documentation of a program is administrative. Assigning a LOWER VRF to R1 is more logical since R4, which is the requirement to implement the PSMP, is assigned a MEDIUM VRF because, if violated, it could directly affect the electrical state or the capability of the bulk electric system.
Response:	The SDT has reconsidered the VRFs in accordance with the guidance provided by NERC and FERC, and the Standard has been modified to assign the VRFs as R1 – Medium, R2 – Medium, R3 – Medium, and R4 – High.
Segment:	1
Organization:	Ameren Services
Member:	Kirit S. Shah
Comment:	The Lower VSL for all Requirements should begin above 1% of the components.
Response:	The NERC criteria for VSLs do not currently permit them to allow some level of non-performance without being in violation.
Segment:	5
Organization:	Constellation Power Source Generation, Inc.
Member:	Amir Y Hammad
Comment:	In general, the VSLs are completely biased against small generating facilities that may have only 20 or 30 components to their protective system. If a facility with only 30 components were to fail to identify 2 components, then that would automatically fall under a moderate VSL. This is true for R1 and R4. A suggestion would be to eliminate the percentage of components and instead focus on what the violation is. For example, for R1, a lower VSL could state “the entity’s PSMP includes all of the ‘types’ of components included in the definition of ‘Protection System’, but failed to specify whether a component is being addressed

	by time-based, condition-based, or performance-based maintenance.
Response:	The SDT believes the stepped VSLs are not biased against small entities.
Segment:	5
Organization:	Liberty Electric Power LLC
Member:	Daniel Duff
Comment:	Voting no due to a no vote on the standard, as well as a disagreement with the percentage concept. Smaller entities will have a higher violation level for the same offense due to fewer chances for a violation.
Response:	The SDT believes the stepped VSLs are not biased against small entities.
Segment:	5, 6
Organization:	Tennessee Valley Authority
Member:	George T. Ballew, Marjorie S. Parsons
Comment:	The reason for the no vote on the Non-Binding Poll for VRFs and VSLs is the Violation Severity Level Table listing for Requirement R4 lists the following under “Severe VSL”. “Entity has failed to initiate resolution of maintenance-correctable issues” The threshold for a Severe Violation in this case is too broad and too subjective. The threshold needs to be clearly defined with low, medium, and high criteria. This feedback has been added to the NERC Standards Under Development Comment webpage.
Response:	The VSL for Requirement R4 has been modified to provide a stepped VSL for initiation of resolution of maintenance correctable issues.
Segment:	1
Organization:	Duke Energy Carolina
Member:	Douglas E. Hils
Comment:	We appreciate the work of the team however we do not agree with some of the text proposed. The VSLs for PRC-005-2 requirements R1, R2 and R4 have significantly tighter percentages than the corresponding requirements in PRC-005-1. We believe that the Lower VSL should be up to 10%, the Moderate VSL should be 10%-15%, the High VSL should be 15% to 20%, and the Severe VSL should be greater than 20%, which is still a lower percentage than

	the 25% Lower VSL currently in PRC-005-1.
Response:	The percentages for the stepped VSLs were established in accordance with the NERC VSL Guidelines which were in turn established pursuant to the FERC VSL Order. The current approved PRC-005-1 preceded these guidelines, and therefore is not in accordance with them.
Segment:	5
Organization:	U.S. Bureau of Reclamation
Member:	Martin Bauer
Comment:	The intervals in the standard are based on the weighted average practice of entities surveyed. The weighted average practice was the result of a requirement to have a documented program. The intervals did not have demonstrated relationship to reliability of the BES. This nullifies the requirements and subsequent VSL's. 1. The VSL's use terms that are not tied back to a requirement and appear to be based on the concept that every component will cause an impact on the BES. The VSL's use the term "countable event" to score the VSL; however, there is no requirement associated with the number of "countable events". 2. The VSL's should allow for minor gaps in maintenance documentation where there is no impact to the BES if the component failed.
Response:	1. The SDT disagrees that the VSLs are not tied back to a requirement. R3 refers to Attachment A for the criteria for a performance based program, which establishes criteria for the percentage of countable events allowed for the components in any specific designated segment. 2. “Minor gaps in maintenance documentation” would seem to be within the description of a Lower VSL; the NERC criteria for VSLs do not currently permit them to allow some “gaps” without being in violation. The VSL for Requirement R4 has been modified to provide a stepped VSL for initiation of resolution of maintenance correctable issues.
Segment:	1
Organization:	Georgia Transmission Corporation
Member:	Harold Taylor, II
Comment:	1. As the current requirements are written in R1 of PRC-005-2 Draft, we disagree with the terms identify all Protection System components. We recommend a less prescriptive requirement as listed below. R1.1 Identify BES substations or facilities containing Protection Systems.

	R1.2 Identify whether Protection Systems per substation or facilities are addressed through time-based, condition-based, performance based or a combination based etc. R1.3 For each substation/facility with Protection Systems, include all maintenance activities etc. 2. The VRF for R1 ranking should be lower or no greater than R2, R3, and R4. The task of identifying Protection System components has very little to do with increasing reliability of the BES. The implementation of the PSMP most likely will cover all the specific functions of Protection System components although the entity failed to identify all PS components. 3. We recommend the above language changes and agree the requirement adds some value but not a high-risk value to the BES. After correcting the language we feel that a requirement of 100% maintenance on 100% of all components as listed on page 6 of the standard for the VSLs leaves no room for error for systems designed with contingences. The violations should start for more than a level of 5% not identified, not maintained, etc.
Response:	1. This appears to be a comment related to the standard content, not the VRFs and VSLs. 2. The SDT has reconsidered the VRFs in accordance with the guidance provided by NERC and FERC, and the Standard has been modified to assign the VRFs as R1 – Medium, R2 – Medium, R3 – Medium, and R4 – High. 3. The NERC criteria for VSLs do not currently permit them to allow some level of non-performance without being in violation.
Segment:	1, 3
Organization:	National Grid, Niagara Mohawk (National Grid Company)
Member:	Saurabh Saksena, Michael Schiavone
Comment:	National Grid does not support the VSL criteria based on "total number of components". Calculating total number of components will be hugely costly and does not enhance any reliability. It will also take away the much needed resources required for maintenance.
Response:	The SDT believes establishing multiple levels within the VSL is preferable to assigning only a Severe VSL; consequently, a method of measuring relative performance must exist, and determining the quantity of components is a necessity.
Segment:	1, 3, 3, 3, 3, 5
Organization:	Southern Company Services, Inc., Georgia Power Company, Gulf Power Company, Mississippi Power,

	Alabama Power Company, Southern Company Generation
Member:	Horace Stephen Williamson, Anthony L Wilson, Gwen S Frazier, Don Horsley, Richard J. Mandes, William D Shultz
Comment:	If an entity is not able to reasonably quantify which components are in scope, demonstrating compliance on a percent-basis may prove difficult or impossible. Further review may indicate the need to reformat the VSL.
Response:	The SDT believes establishing multiple levels within the VSL is preferable to assigning only a Severe VSL; consequently, a method of measuring relative performance must exist, and determining the quantity of components is a necessity.
Segment:	3
Organization:	Allegheny Power
Member:	Bob Reeping
Comment:	The draft standard expects 100% compliance for millions of protection system components at all times. The standard should consider a statistically based performance metric instead of a performance target that expects 100% compliance.
Response:	The SDT shares your concerns regarding the Lower VSL portion of the stepped VSLs not providing any tolerance for non-conformance without being non-compliant. However, the VSL Guidelines, which conform to the FERC VSL order, specify that Lower shall be “5% or less.”
Segment:	5
Organization:	AEP Service Corp.
Member:	Brock Ondayko
Comment:	AEP has stated in other projects, setting a VSL at “Severe” for a binary outcome could be challenged as being arbitrary and another level should be used as the starting point.
Response:	The NERC VSL Guidelines, which were established pursuant to the FERC VSL Order, specify that Severe VSLs be assigned for binary outcomes.
Segment:	3, 4
Organization:	Georgia System Operations Corporation
Member:	R Scott S. Barfield-McGinnis, Guy Andrews

Comment:	1. Do not agree with the 3 calendar months interval and suggest using quarterly. Both terms require a minimum of four inspections per year have proven to be successful, but the term "quarterly" provides a bit more flexibility than the term "3 calendar months". Given a 3 month maximum interval an entity would need to schedule these tasks every 2 months. As the current requirements are written in R1 of PRC-005-2 Draft, we disagree with the terms identify all Protection System components. We recommend a less prescriptive requirement as listed below. -R1.1 Identify BES substations or facilities containing Protection Systems. -R1.2 Identify whether Protection Systems per substation or facilities are addressed through time-based, condition-based, performance based or a combination based etc. -R1.3 For each substation/facility with Protection Systems include all maintenance activities etc. 2. The VRF for R1 ranking should be lower or no greater than R2, R3, and R4. The task of identifying Protection System components has very little to do with increasing reliability of the BES. The implementation of the PSMP most likely will cover all the specific functions of Protection System components although the entity failed to identify all PS components. We recommend the above language changes and agree the requirement adds some value but not a high-risk value to the BES. 2. After correcting the language we feel that a requirement of 100% maintenance on 100% of all components as listed on page 6 of the standard for the VSLs leaves no room for error for systems designed with contingences. 3. The violations should start for more than a level of 5% not identified, not maintained, etc. Listing each individual Protection System component as current draft is onerous and impedes any interpretation of application with very little value. 4. The standard as written will require a great deal of effort by the utilities to maintain 100% compliance as listed. The concern is the power system design allows for some contingencies but the standard allows for no errors. Failing to complete 1% of the maintenance by 1 day infers an entity is out of compliance or in violation. 5. The violations should start for more than a level of 5% not identified, or not maintained. We feel the minor changes of wording as described in R1.1 – R1.3 as listed above will go a long way in removing the concerns of the standard. We feel the intent of the standard is sound and request minor changes to facilitate an interpretable standard that sensibly mitigates problems with the BES. As the standard written, the

	interpretation seems to create a stringent environment with undue compliance requirements. 6. Lastly, the SDT should attempt to embrace Gerry Cauley's vision of "results-based standards" and clearly identify the "risk mitigation objectives, reliability result or outcome" of the revised requirements and allow each entity to meet the outcome and mitigate the risk without writing in such a prescriptive manner which is not preferred. The prescriptive details currently proposed in the standard could then be captured in a reference document.
Response:	1. This comment appears be related to the technical content of the standard and not on the VRFs or VSLs. 2. The SDT has reconsidered the VRFs in accordance with the guidance provided by NERC and FERC, and the Standard has been modified to assign the VRFs as R1 – Medium, R2 – Medium, R3 – Medium, and R4 – High. 3. The NERC criteria for VSLs do not currently permit them to allow some level of non-performance without being in violation. 4. The NERC criteria for VSLs do not currently permit them to allow some level of non-performance without being in violation. 5. The SDT believes establishing multiple levels within the VSL is preferable to assigning only a Severe VSL; consequently, a method of measuring relative performance must exist, and determining the quantity of components is a necessity. 6. This comment appears to be related to the standard itself, not to the VRFs or VSLs.
Segment:	1
Organization:	Tennessee Valley Authority
Member:	Larry Akens
Comment:	The VSL Table listing for Requirement R4 list the following under Severe VSL: "Entity has failed to initiate resolution of maintenance-correctable issues" The threshold for a Severe Violation in this case is too broad and too subjective. The threshold needs to be clearly defined with low, medium, and high criteria.
Response:	The VSL for Requirement R4 has been modified to provide a stepped VSL for initiation of resolution of maintenance correctable issues.
Segment:	3, 5, 6
Organization:	Entergy, Entergy Corporation, Entergy Services, Inc.
Member:	Joel T Plessinger, Stanley M Jaskot, Terri F Benoit

Comment:	Entergy provides the following reasons for our Negative Ballot. Entergy reserves the right, after review of all the submitted ballots, to join with other balloters, whether positive or negative ballots, where any reasons included in their ballot that may be applicable to or otherwise impact Entergy as related to this ballot. 1. The VSLs for R1 is "Failure to specify whether a component is being addressed by time-based, condition-based, or performance-based maintenance" by itself is a documentation issue and not an equipment maintenance issue. We recommend this warrants only a Lower VSL, especially when one of the required components can only be time based. 2. We also recommend the VSLs for R4 be revised to be stepped from Lower to Severe for "Entity has failed to initiate resolution of maintenance-correctable issues". While we understand the importance of addressing a correctable issue, it seems like there should be some allowance for an isolated unintentional failure to address a correctable issue. If possible, consider the potential impact to the system. For example, a failure to address a pilot scheme correctable issue for an entity that only employs pilot schemes for system stability applications should not necessarily have the same VSL consequence as an entity which employs pilot schemes everywhere on their system as a standard practice.
Response:	1. This portion of the VSL for Requirement R1 has been modified to provide a stepped VSL relating to the number of Component Types that are not addressed by time-based, condition-based, or performance-based maintenance. 2. The VSL for Requirement R4 has been modified to provide a stepped VSL for initiation of resolution of maintenance correctable issues.
Segment:	1
Organization:	Pacific Gas and Electric Company
Member:	Chifong L. Thomas
Comment:	We cannot vote affirmative on the VRFs and VSLs until concerns on the proposed standard have been addressed.
Response:	Thank you.
Segment:	1, 3
Organization:	Platte River Power Authority
Member:	John C. Collins, Terry L Baker

Comment:	Because of the recommended NO vote on the standard, it would not make sense to approve the proposed VRFs and VSLs until such time the requirements of the standard are clarified.
Response:	Thank you.
Segment:	1
Organization:	Public Service Company of New Mexico
Member:	Laurie Williams
Comment:	Because of the NO vote on the standard, it would not make sense to approve the proposed VRFs and VSLs until such time that the requirements of the standard are clarified.
Response:	Thank you.
Segment:	1
Organization:	Xcel Energy, Inc.
Member:	Gregory L Pieper
Comment:	Xcel Energy believes the standard still contains many aspects that are not clearly understood by entities, including what is needed to demonstrate a compliant PSMP. Comments have been submitted concurrently to NERC via the draft comment response form.
Response:	Thank you.
Segment:	2
Organization:	Midwest ISO, Inc.
Member:	Jason L Marshall
Comment:	We are abstaining because a number of our stakeholders have concerns regarding the definition of Protection System and inclusion of UVLS and UFLS in a standard dealing with maintenance of protection systems.
Response:	Thank you.
Segment:	5
Organization:	Pacific Gas and Electric Company
Member:	Richard J. Padilla
Comment:	We cast a negative ballot due to a negative vote on the standard and recommend that the VRFs and VSLs be

	addressed after the standard comments are resolved
Response:	Thank you.
Segment:	10
Organization:	Western Electricity Coordinating Council
Member:	Louise McCarren
Comment:	Do not agree with all of the requirements of the current proposed standard, so will not vote to approve associated VRFs and VSLs
Response:	Thank you.
Segment:	3
Organization:	Central Lincoln PUD
Member:	Steve Alexanderson
Comment:	Too early to approve the VRFs and VSLs since the requirements need to be fixed first.
Response:	Thank you.
Segment:	1
Organization:	American Electric Power
Member:	Paul B. Johnson
Comment:	AEP has comments regarding the current requirements and measures that need to be addressed, so comments on VSLs are irrelevant at this time.
Response:	Thank you.
Segment:	6
Organization:	AEP Marketing
Member:	Edward P. Cox
Comment:	AEP has comments regarding the current requirements and measures that need to be addressed.
Response:	Thank you.
Segment:	1

Organization:	BC Transmission Corporation
Member:	Gordon Rawlings
Comment:	Not prepared to vote affirmative until such time as BC Hydro can support Project 2007-17 PRC-005-2
Response:	Thank you.
Segment:	3
Organization:	City of Bartow, Florida
Member:	Matt Culverhouse
Comment:	The proposed draft opens the standard up to regulate DC circuit testing on distribution elements with no significant improvement to BES reliability.
Response:	This appears to be a comment on the technical content of the standard, not on the VRFs or VSLs.
Segment:	3
Organization:	Tri-State G & T Association Inc.
Member:	Janelle Marriott
Comment:	Clarification is needed to address the potentially onerous implementation, administration, audit of the proposed revisions.
Response:	Without details of your concern, the SDT is unable to respond.
Segment:	3
Organization:	Consolidated Edison Co. of New York
Member:	Peter T Yost
Comment:	There is not enough clarity on whether a Distribution Provider (DP) will be able to clearly identify which protection system components it does own and needs to maintain. Many DPs own and/or operate equipment identified in the existing or proposed definition. However, not all such equipment translates into a transmission Protection System. The definition needs clarification on when such equipment is a part of the transmission protection system. Also, the time provided for the first phase "at least six months" is too open ended and does not provide entities with a clear timeline. It is suggested that one year is appropriate for the first phase phasing out the second year in stages.
Response:	This appears to be a comment on the technical content of the standard, definition, and Implementation Plan,

	not on the VRFs or VSLs.
Segment:	2
Organization:	New York Independent System Operator
Member:	Gregory Campoli
Comment:	There is not enough clarity on whether a Distribution Provider (DP) will be able to clearly identify which protection system components it does own and needs to maintain. Many DPs own and/or operate equipment identified in the existing or proposed definition. However, not all such equipment translates into a transmission Protection System. The definition needs clarification on when such equipment is a part of the transmission protection system. Also, the time provided for the first phase "at least six months" is too open ended and does not provide entities with a clear timeline. It is suggested that one year is appropriate for the first phase phasing out the second year in stages. Regarding battery visuals, the suggestion for consideration is it should be changed from 3 months to 6 months. Electrolyte levels of today's lead-calcium batteries are relatively stable for a 6 month period compared to lead-antimony batteries used in the past. The Implementation plan is too short - In many instances it will be impossible to meet, especially if entities have to create, purchase and adopt new databases to track maintenance activities. Often new procedures will have to be written and additional resources justified and hired. It would be more acceptable if a staged approached was taken similar to the DME Standard. Accounting for every component of a protection system will be an enormous overhead and will take away resources from actually doing maintenance. Emphasis should be on systems and not individual components.The Standard does not provide a grace period if an entity is unable to meet the maintenance requirement for extenuating circumstances. For example if an entity has to divert maintenance resources to storm restoration following a major event, slack built into a maintenance program can be eaten up and put the maintenance over the prescribed period. Provision should be made for a mitigation plan to get back on track. We do not believe the reliability of the Bulk Electric System will be compromised if an entities' maintenance program slips by a few months due to extreme contingencies, especially if it is brought back on track within a short time frame.
Response:	These comments appear to be related to the technical content of the standard, definition, and Implementation Plan, not on the VRFs or VSLs.
Segment:	4, 5
Organization:	Florida Municipal Power Agency
Member:	Frank Gaffney, David Schumann

Comment:	FMPA recommends a negative vote on PRC-005-2, Project 2007-17, for three significant reasons 1. As written, it opens up the PRC-005 standard to Technical Feasibility Exceptions because some batteries are not able to accommodate all of the tests proscribed in the draft standard as explained by Steve Alexanderson in a prior e-mail to the ballot pool. The draft standard would cause NERC to regulate through the standards battery testing, DC circuit testing, etc. on distribution elements with no significant improvement to BES reliability, which is beyond the statutory scope of the standards 2. The standard unreasonably retains the "100% compliance" paradigm for thousands, if not millions of protection system components. Will the Standard Introduce Technical Feasibility Exceptions to PRC Standards? As described by Steve Alexanderson in a prior e-mail to the ballot pool, a large proportion of the batteries (as high as 50% as reported by some SMEs) are not able to accommodate all of the tests prescribed in the draft standard. Will this necessitate the introduction of TFEs into the process unnecessarily? The Standard Reaches Beyond the Statutory Scope of the Reliability Standards As written, the standard requires testing of batteries, DC control circuits, etc., of distribution level protection components associated with UFLS and UVLS. UFLS and UVLS are different than protection systems used to clear a fault from the BES. An uncleared fault on the BES can have an Adverse Reliability Impact and hence; the focus on making sure the fault is cleared is important and appropriate. However, a UFLs or UVLS event happens after the fault is cleared and is an inexact science of trying to automatically restore supply and demand balance (UFLS) or restore voltages (UVLS) to acceptable levels. If a few UFLS or UVLS relays fail to operate out of potentially thousands of relays with the same function, there is no significant impact to the function of UFLS or UVLS. Hence, there is no corresponding need to focus on every little aspect of the UFLS or UVLS systems. Therefore, the only component of UFLS or UVLS that ought to be focused on in the new PRF-005 standard is the UFLS or UVLS relay itself and not distribution class equipment such as batteries, DC control circuitry, etc., and these latter ought to be removed from the standard. In addition, most distribution circuit are radial without substation arrangements that would allow functional testing without putting customers out of service while the testing was underway, or at least without momentary outages while customers were switched from one circuit to another. Therefore, as written, we would be sacrificing customer service for a negligible impact on BES reliability. Perfection is Not A Realistic Goal The standard allows no mistakes. Even the famous six sigma quality management program allows for defects and failures (i.e., six sigma is six standard deviations, which means that statistically, there are events that fall outside of six standard deviations). PRC-005 has been drafted such that any failure is a violation, e.g., 1 day late on a single relay test of tens of thousands of relays is a violation. That is not in alignment with worldwide accepted quality management practices (and also makes audits very painful because statistical, random sampling should be the mode of audit, not 100% review as is currently being done in many instances). FMPA suggests

	considering statistically based performance metrics as opposed to an unrealistic performance target that does not allow for any failure ever. Due to the shear volume of relays, with 100% performance required, if the standards remain this way, PRC-005 will likely be in the top ten most violated standards for the forever. There is a fundamental flaw in thinking about reliability of the BES. We are really not trying to eliminate the risk of a widespread blackout, we are trying to reduce the risk of a widespread blackout. We plan and operate the system to single and credible double contingencies and to finite operating and planning reserves. To eliminate the risk, we would need to plan and operate to an infinite number of contingencies, and have an infinite reserve margin, which is infeasible. Therefore, by definition, there is a finite risk of a widespread blackout that we are trying to reduce, not eliminate, and, by definition, by planning and operating to single and credible double contingencies and finite operating and planning reserves, we are actually defining the level of risk from a statistical basis we are willing to take. With that in mind, it does not make sense to require 100% compliance to avoid a smaller risk (relays) when we are planning to a specified level of risk with more major risk factors (single and credible double contingencies and finite planning and operating reserves).
Response:	1. This comment appears to be related to the technical content of the Standard, not on the VRFs or VSLs. 2. The NERC criteria for VSLs do not currently permit them to allow some level of non-performance without being in violation. Much of this comment appears to be related to the technical content of the standard, not on the VRFs or VSLs.
Segment:	1
Organization:	Lake Worth Utilities
Member:	Walt Gill
Comment:	1. As written, is opens up the PRC-005 standard to Technical Feasibility Exceptions because some batteries are not able to accommodate all of the tests proscribed in the draft standard 2. The draft standard would cause NERC to regulate through the standards battery testing, DC circuit testing, etc. on distribution elements with no significant improvement to BES reliability, which is beyond the statutory scope of the standards 3. The standard unreasonably retains the "100% compliance" paradigm for thousands, if not millions of protection system components. Will the Standard Introduce Technical Feasibility Exceptions to PRC Standards? a large proportion of the batteries (as high as 50% as reported by some SMEs) are not able to accommodate all of the tests prescribed in the draft standard. Will this necessitate the introduction of TFEs into the process unnecessarily? The Standard Reaches Beyond the Statutory Scope of the Reliability

	Standards As written, the standard requires testing of batteries, DC control circuits, etc., of distribution level protection components associated with UFLS and UVLS. UFLS and UVLS are different than protection systems used to clear a fault from the BES. An uncleared fault on the BES can have an Adverse Reliability Impact and hence; the focus on making sure the fault is cleared is important and appropriate. However, a UFLs or UVLS event happens after the fault is cleared and is an inexact science of trying to automatically restore supply and demand balance (UFLS) or restore voltages (UVLS) to acceptable levels. If a few UFLS or UVLS relays fail to operate out of potentially thousands of relays with the same function, there is no significant impact to the function of UFLS or UVLS. Hence, there is no corresponding need to focus on every little aspect of the UFLS or UVLS systems. Therefore, the only component of UFLS or UVLS that ought to be focused on in the new PRF-005 standard is the UFLS or UVLS relay itself and not distribution class equipment such as batteries, DC control circuitry, etc., and these latter ought to be removed from the standard. In addition, most distribution circuit are radial without substation arrangements that would allow functional testing without putting customers out of service while the testing was underway, or at least without momentary outages while customers were switched from one circuit to another. Therefore, as written, we would be sacrificing customer service for a negligible impact on BES reliability. Perfection is Not A Realistic Goal The standard allows no mistakes. Even the famous six sigma quality management program allows for defects and failures (i.e., six sigma is six standard deviations, which means that statistically, there are events that fall outside of six standard deviations). PRC-005 has been drafted such that any failure is a violation, e.g., 1 day late on a single relay test of tens of thousands of relays is a violation. That is not in alignment with worldwide accepted quality management practices (and also makes audits very painful because statistical, random sampling should be the mode of audit, not 100% review as is currently being done in many instances). FMPA suggests considering statistically based performance metrics as opposed to an unrealistic performance target that does not allow for any failure ever. Due to the shear volume of relays, with 100% performance required, if the standards remain this way, PRC-005 will likely be in the top ten most violated standards for the forever. There is a fundamental flaw in thinking about reliability of the BES. We are really not trying to eliminate the risk of a widespread blackout, we are trying to reduce the risk of a widespread blackout. We plan and operate the system to single and credible double contingencies and to finite operating and planning reserves. To eliminate the risk, we would need to plan and operate to an infinite number of contingencies, and have an infinite reserve margin, which is infeasible. Therefore, by definition, there is a finite risk of a widespread blackout that we are trying to reduce, not eliminate, and, by definition, by planning and operating to single and credible double contingencies and finite operating and planning reserves, we are actually defining the level of risk from a statistical basis we are willing to take. With that in mind, it does not make sense to require 100%

	compliance to avoid a smaller risk (relays) when we are planning to a specified level of risk with more major risk factors (single and credible double contingencies and finite planning and operating reserves).
Response:	1. This comment appears to be related to the technical content of the standard, not on the VRFs or VSLs. 2. This comment appears to be related to the technical content of the standard, not on the VRFs or VSLs. 3. The NERC criteria for VSLs do not currently permit them to allow some level of non-performance without being in violation. Much of this comment appears to be related to the technical content of the Standard, not on the VRFs or VSLs.
Segment:	4
Organization:	Wisconsin Energy Corp.
Member:	Anthony Jankowski
Comment:	see comments on standard
Response:	Please refer to the SDT responses to your comments on the comment form.
Segment:	5
Organization:	Consumers Energy
Member:	James B Lewis
Comment:	1. If multiple redundant Protection System components, with associated parallel tripping paths, are provided, Table 1a, 1b, and 1c require that each parallel path be maintained, and that the maintenance be documented. Often, these multiple schemes are provided not to meet specific reliability-related requirements, but instead to provide operating flexibility. Testing these likely will require outages, and those outages may result in decreased reliability. Further, the documentation related to maintenance of all paths will be very cumbersome, and will lead to increased compliance exposure simply by its volume. This may perversely lead to entities NOT installing the redundant schemes, resulting in decreased reliability. 2. Many of the activities described in the Tables are not, by themselves, clear. The standard should include sufficient detail such that entities are clear as to what must be done for compliance, rather that relying on supplementary documents for this information. For example, it's not clear, in Table 1a (Station DC Supply), what is meant by, "Verify that the dc supply can perform as designed when the ac power from the grid is not present." Similarly, it isn't clear from the general description within the Tables that components possessing different monitoring attributes within a single scheme, may be distinguished such that differing relevant tables can be used for the separate components. 3. In Table 1a, Station DC Supply, one of two optional activities is to "Verify that the station battery can

	perform as designed by evaluating the measured cell/unit internal ohmic values to station battery baseline. Battery assemblies supplied by some manufacturers have the connections made internally, making this option unavailable. Experience with ASME standards show that NERC and SDT members may be jointly and separately liable for litigation by specifying methods that either prefer or prohibit use of certain technologies. 4. Two of the four Maintenance Activities that begin with "Perform a complete functional trip …" conclude with "… does not require actual tripping of circuit breakers or other interrupting devices. Do the other two such activities therefore require tripping of circuit breakers or other interrupting devices? 5. Performance of the minimum activities specified within Table 1a for legacy systems, particularly regarding control circuits, will require considerable disconnection and reconnection of portions of the circuits. Such activities will likely cause far more problems on restoration-to-service than they will locate and correct. We suggest that the SDT reconsider these activities with regard for this concern. 5. We do not agree that Footnotes within the Standard are an appropriate method of providing information that is important to the application of the Standard. Important information should be provided within the standard text. 6. As for the definition, it is unclear whether "voltage and current sensing inputs" include the instrument transformer itself, or does it pertain to only the circuitry and input to the protective relays. 7. As for the definition, it is not clear what is included in the component, "station dc supply" without referring to other documents (the posted Supplementary Reference and/or FAQ) for clarification. The definition should be sufficiently detailed to be clear. 8. If Protection Systems trip via AC methods, are those systems, and the associated control circuitry included in the definition and within the requirements of the Standard as expressed within the Tables?
Response:	These comments all appear to be related to the technical content of the Standard and to the definition, not to the VRFs or VSLs.
Segment:	1, 3, 5, 6
Organization:	Kansas City Power & Light Co.
Member:	Mike Gammon, Charles Locke, Scott Heidtbrink, Thomas Saitta
Comment:	The proposed changes in the Standard are far too prescriptive and do not take into account the multitude of manufacturers' equipment by establishing broad maintenance cycles and testing intervals.
Response:	This comment appears to be related to the technical content of the Standard, not to the VRFs or VSLs.
Segment:	5

Organization:	Salt River Project
Member:	Glen Reeves
Comment:	SRP believes the requirements of the Standard are confusing and may be problematic in determining compliance. We also believe the required functional testing of the breaker trip coil may potentially increase maintenance outages of circuit breakers. In most cases, circuit breaker maintenance outages can be coordinated such that Protection System maintenance and testing can be done simultaneously. However, in some cases this may not be possible. Outages of any BES facility whether planned or unplanned can impact system reliability. SRP suggests that trip coil monitoring devices be included as an acceptable means of ensuring the trip coil is functioning properly. This will help to avoid unnecessary outages.
Response:	This comment appears to be related to the technical content of the Standard, not to the VRFs or VSLs.
Segment:	6
Organization:	Seattle City Light
Member:	Dennis Sismaet
Comment:	Functional testing is impractical.
Response:	This comment appears to be related to the technical content of the Standard, not to the VRFs or VSLs.
Segment:	1
Organization:	Keys Energy Services
Member:	Stan T. Rzad
Comment:	1. As written, it opens up the PRC-005 standard to Technical Feasibility Exceptions because some batteries are not able to accommodate all of the tests proscribed in the draft standard. The draft standard would cause NERC to regulate through the standards battery testing, DC circuit testing, etc. on distribution elements with no significant improvement to BES reliability, which is beyond the statutory scope of the standards 2. The standard unreasonably retains the "100% compliance" paradigm for thousands, if not millions of protection system components.
Response:	1. This comment appears to be related to the technical content of the Standard, not to the VRFs or VSLs. 2. The NERC criteria for VSLs do not currently permit them to allow some level of non-performance without being in violation. Much of this comment appears to be related to the technical content of the Standard, not on the VRFs or VSLs.

Segment:	1
Organization:	PPL Electric Utilities Corp.
Member:	Brenda L Truhe
Comment:	PPL EU is voting negative because Requirement 1.1 "Identify all Protection System components" is too broad and must be clarified and the definition of Protective Relays is not limited to only those devices that use electrical quantities as inputs (exclude pressure, temperature, gas, etc).
Response:	This comment appears to be related to the technical content of the Standard, not to the VRFs or VSLs.
Segment:	3
Organization:	Springfield Utility Board
Member:	Jeff Nelson
Comment:	Please refer to SUB's comments on VRFs and VFLs in the Comment Form
Response:	Please refer to the SDT responses to your comments on the comment form.
Segment:	3
Organization:	Louisville Gas and Electric Co.
Member:	Charles A. Freibert
Comment:	Comments will be submitted under a comment form
Response:	Please refer to the SDT responses to your comments on the comment form.

NERC
NORTH AMERICAN ELECTRIC RELIABILITY CORPORATION

Consideration of Comments on Proposed Definition of Protection System for Project 2007-17

The Protection System Maintenance and Testing Standard Drafting Team thanks all commenters who submitted comments on the draft definition of "Protection System." This document was posted for a special 35-day public comment period from June 11, 2010 through July 16, 2010. Stakeholders were asked to provide feedback on the proposed definition through a special Electronic Comment Form. There were 50 sets of comments, including comments from more than 110 different people from over 55 companies representing 8 of the 10 Industry Segments as shown in the table on the following pages.

Based on stakeholder comments, the drafting team refined its proposed definition of Protection System as shown below:

> Protective relays , which respond to electrical quantities, communication systems necessary for correct operation of protective functions, voltage and current sensing devices providing inputs to protective relays, station dc supply, and control circuitry associated with protective functions through the trip coil(s) of the circuit breakers or other interrupting devices.

Several comments questioned the reason for implementing the definition of Protection System in advance of implementing the proposed modifications to PRC-005-1. When the Board of Trustees was asked to approve an interpretation of PRC-005-1 that was written by the PSMT SDT, the board acknowledged the reliability gap identified by the drafting team caused by the definition of "protection system" and directed that work to close this reliability gap should be given "priority." To close this reliability gap the BOT has directed that revised definition be applied to PRC-005-1 as soon as practical - not years from now.

Stakeholder comments indicated that applying the expanded scope of the definition of Protection System would to PRC-005-1 would require more than six months and suggested expanding this to 12 months, and the drafting team made this change to the implementation plan. The team adjusted the implementation plan so that entities will have at least twelve months, rather than the six months originally proposed, to apply the new definition of Protection System to PRC-005-1 – Protection System Maintenance and Testing to Requirement R1 of PRC-005-1. The other parts of the implementation plan remain unchanged.

All work of the drafting team has been posted at the following site:

http://www.nerc.com/filez/standards/Protection_System_Maintenance_Project_2007-17.html

If you feel that your comment has been overlooked, please let us know immediately. Our goal is to give every comment serious consideration in this process! If you feel there has been an error or omission, you can contact the Vice President and Director of Standards, Herbert Schrayshuen, at 609-452-8060 or at Herb.Schrayshuen@nerc.net. In addition, there is a NERC Reliability Standards Appeals Process.[1]

[1] The appeals process is in the Reliability Standards Development Procedures: http://www.nerc.com/standards/newstandardsprocess.html.

Index to Questions, Comments, and Responses

1. Do you believe the proposed definition of Protection System is ready for ballot? If not, please explain why. 10

2. Do you agree with the implementation plan for the revised definition of Protection System? The implementation plan has two phases – the first phase gives entities at least six months to update their protection system maintenance and testing program; the second phase starts when the protection system maintenance and testing program has been updated and requires implementation of any additional maintenance and testing associated with the program changes by the end of the first complete maintenance and testing cycle described in the entity's revised program. If you disagree with this implementation plan, please explain why. 30

The Industry Segments are:

1 — Transmission Owners
2 — RTOs, ISOs
3 — Load-serving Entities
4 — Transmission-dependent Utilities
5 — Electric Generators
6 — Electricity Brokers, Aggregators, and Marketers
7 — Large Electricity End Users
8 — Small Electricity End Users
9 — Federal, State, Provincial Regulatory or other Government Entities
10 — Regional Reliability Organizations, Regional Entities

		Commenter	Organization	Industry Segment									
				1	2	3	4	5	6	7	8	9	10
1.	Group	Guy Zito	Northeast Power Coordinating Council										X

	Additional Member	Additional Organization	Region	Segment Selection
1.	Alan Adamson	New York State Reliability Council, LLC	NPCC	10
2.	Gregory Campoli	New York Independent System Operator	NPCC	2
3.	Kurtis Chong	Independent Electricity System Operator	NPCC	2
4.	Sylvain Clermont	Hydro-Quebec TransEnergie	NPCC	1
5.	Chris de Graffenried	Consolidated Edison Co. of New York, Inc.	NPCC	1
6.	Gerry Dunbar	Northeast Power Coordinating Council	NPCC	10
7.	Ben Eng	New York Power Authority	NPCC	4
8.	Brian Evans-Mongeon	Utility Services	NPCC	8
9.	Dean Ellis	Dynegy Generation	NPCC	5
10.	Brian L. Gooder	Ontario Power Generation Incorporated	NPCC	5
11.	Kathleen Goodman	ISO - New England	NPCC	2
12.	David Kiguel	Hydro One Networks Inc.	NPCC	1
13.	Michael R. Lombardi	Northeast Utilities	NPCC	1
14.	Randy MacDonald	New Brunswick System Operator	NPCC	2
15.	Bruce Metruck	New York Power Authority	NPCC	6

	Commenter	Organization	Industry Segment									
			1	2	3	4	5	6	7	8	9	10
16. Lee Pedowicz	Northeast Power Coordinating Council	NPCC 10										
17. Robert Pellegrini	The United Illuminating Company	NPCC 1										
18. Saurabh Saksena	National Grid	NPCC 1										
19. Michael Schiavone	National Grid	NPCC 1										
20. Peter Yost	Consolidated Edison Co. of New York, Inc.	NPCC 3										
21. Chantel Haswell	FPL Group	NPCC 5										
22. Si Truc Phan	Hydro-Quebec TransEnergie	NPCC 1										
2. Group	Steve Alexanderson	Pacific Northwest Small Public Power Utility Comment Group			X	X						
Additional Member	**Additional Organization**	**Region**	**Segment Selection**									
1. Russ Noble	Cowlitz PUD	WECC	3, 4, 5									
2. Dave Proebstel	Clallam County PUD	WECC	3									
3. John Swanson	Benton PUD	WECC	3									
4. Steve Grega	Lewis County PUD	WECC	3, 5									
3. Group	Margaret Ryan	PNGC Power			X					X		
Additional Member	**Additional Organization**	**Region**	**Segment Selection**									
1.	Blachly-Lane Electric Cooperative	WECC	3									
2.	Central Electric Cooperative	WECC	3									
3.	Clearwater Electric Cooperative	WECC	3									
4.	Consumer's Power Company	WECC	3									
5.	Coos-Curry Electric Cooperative	WECC	3									
6.	Douglas Electric Cooperative	WECC	3									
7.	Fall River Electric Cooperative	WECC	3									
8.	Lane Electric Cooperative	WECC	3									
9.	Lincoln Electric Cooperative	WECC	3									
10.	Lost River Electric Cooperative	WECC	3									
11.	Northern Lights Electric Cooperative	WECC	3									
12.	Okanogan Electric Cooperative	WECC	3									
13.	Raft River Electric Cooperative	WECC	3									

		Commenter	Organization	Industry Segment									
				1	2	3	4	5	6	7	8	9	10
14.		Salmon River Electric Cooperative	WECC 3										
15.		Umatilla Electric Cooperative	WECC 3										
16.		West Oregon Electric Cooperative	WECC 3										
17.		PNGC	WECC 8										
4.	Group	Denise Koehn	Bonneville Power Administration	X		X		X	X				
	Additional Member	Additional Organization	Region Segment Selection										
1.	Dean Bender	BPA, Transmission SPC Technical Svcs	WECC 1										
5.	Group	Sam Ciccone	FirstEnergy	X		X	X	X	X				
	Additional Member	Additional Organization	Region Segment Selection										
1.	Doug Hohlbaugh	FE	RFC 1, 3, 4, 5, 6										
2.	Jim Kinney	FE	RFC 1										
3.	Ken Dresner	FE	RFC 5										
4.	Brian Orians	FE	RFC 5										
5.	Bill Duge	FE	RFC 5										
6.	J. Chmura	FE	RFC 1										
7.	Dave Folk	FE	RFC 1, 3, 4, 5, 6										
6.	Group	Terry L. Blackwell	Santee Cooper	X		X			X				
	Additional Member	Additional Organization	Region Segment Selection										
1.	S. Tom Abrams	Santee Cooper	SERC 1										
2.	Rene' Free	Santee Cooper	SERC 1										
3.	Bridget Coffman	Santee Cooper	SERC 1										
7.	Group	Kenneth D. Brown	Public Service Enterprise Group ("PSEG Companies")	X		X		X	X				
	Additional Member	Additional Organization	Region Segment Selection										
1.	Jim Hubertus	PSE&G	RFC 1, 3										
2.	Scott Slickers	PSEG Power Connecticut	NPCC 5										
3.	Jim Hebson	PSEG ER&T	ERCOT 5, 6										
4.	Dave Murray	PSEG Fossil	RFC 5										

		Commenter	Organization	Industry Segment									
				1	2	3	4	5	6	7	8	9	10
8.	Group	Daniel Herring	The Detroit Edison Company			X	X	X					
	Additional Member	**Additional Organization**	**Region**	**Segment Selection**									
1.	David A Szulczewski	Relay Engineering	RFC	3, 4, 5									
9.	Group	Sasa Maljukan	Hydro One	X									
	Additional Member	**Additional Organization**	**Region**	**Segment Selection**									
1.	David Kiguel	Hydro One Networks, Inc.	NPCC	1									
10.	Individual	Sandra Shaffer	PacifiCorp	X		X		X	X				
11.	Individual	Brent Inebrigtson	E.ON U.S.	X		X		X	X				
12.	Individual	Brandy A. Dunn	Western Area Power Administration	X					X				
13.	Individual	Jana Van Ness	Arizona Public Service Company	X		X		X	X				
14.	Individual	Jack Stamper	Clark Public Utilities	X									
15.	Individual	Dan Roethemeyer	Dynegy Inc.					X					
16.	Individual	Robert Ganley	Long Island Power Authority	X									
17.	Individual	Lauri Dayton	Grant County PUD	X				X					
18.	Individual	Fred Shelby	MEAG Power	X		X		X					
19.	Individual	James A. Ziebarth	Y-W Electric Association, Inc				X						
20.	Individual	Armin Klusman	CenterPoint Energy	X									
21.	Individual	Andrew Z.Pusztai	American Transmission Company	X									
22.	Individual	Eric Ruskamp	Lincoln Electric System	X		X		X	X				
23.	Individual	Kasia Mihalchuk	Manitoba Hydro	X		X		X	X				
24.	Individual	Edward Davis	Entergy Services	X		X		X	X				
25.	Individual	James Sharpe	South Carolina Electric and Gas	X		X		X	X				
26.	Individual	Jon Kapitz	Xcel Energy	X		X		X	X				
27.	Individual	Scott Kinney	Avista Corp	X									

		Commenter	Organization	Industry Segment									
				1	2	3	4	5	6	7	8	9	10
28.	Individual	Amir Hammad	Constellation Power Generation					X					
29.	Individual	Jeff Nelson	Springfield Utility Board			X							
30.	Individual	Michael R. Lombardi	Northeast Utilities	X		X		X					
31.	Individual	John Bee	Exelon	X		X		X					
32.	Individual	Barb Kedrowski	We Energies			X	X	X					
33.	Individual	Jianmei Chai	Consumers Energy Company			X	X	X					
34.	Individual	Art Buanno	ReliabilityFirst Corp.										X
35.	Individual	Greg Rowland	Duke Energy	X		X		X	X				
36.	Individual	Thad Ness	American Electric Power	X		X		X	X				
37.	Individual	Rex Roehl	Indeck Energy Services					X					
38.	Individual	Claudiu Cadar	GDS Associates	X									
39.	Individual	Terry Bowman	Progress Energy Carolinas	X		X		X	X				
40.	Individual	Kirit Shah	Ameren	X		X		X	X				
41.	Group	Joe Spencer - SERC staff and Phil Winston - PCS co-chair	SERC Protection and Control Sub-committee (PCS)										X

	Additional Member	Additional Organization	Region	Segment Selection
1.	Paul Nauert	Ameren Services Co.	SERC	
2.	Bob Warren	Big Rivers Electric Corp.	SERC	
3.	Trevor Foster	Calpine Corp.	SERC	
4.	John (David) Fountain	Duke Energy Carolinas	SERC	
5.	Paul Rupard	East Kentucky Power Coop.	SERC	
6.	Charles Fink	Entergy	SERC	
7.	Marc Tunstall	Fayetteville Public Works Commission	SERC	
8.	John Clark	Georgia Power Co	SERC	
9.	Nathan Lovett	Georgia Transmission Corp	SERC	

	Commenter	Organization	Industry Segment									
			1	2	3	4	5	6	7	8	9	10
10. Danny Myers	Louisiana Generation, LLC	SERC										
11. Ernesto Paon	Municipal Electric Authority of GA	SERC										
12. Jay Farrington	PowerSouth Energy Coop.	SERC										
13. Jerry Blackley	Progress Energy Carolinas	SERC										
14. Joe Spencer	SERC Reliability Corp	SERC										
15. Russ Evans	South Carolina Electric and Gas	SERC										
16. Bridget Coffman	South Carolina Public Service Authority	SERC										
17. Phillip Winston	Southern Co. Services Inc.	SERC										
18. George Pitts	Tennessee Valley Authority	SERC										
19. Rick Purdy	Virginia Electric and Power Co.	SERC										
42. Group	Frank Gaffney	Florida Municipal Power Agency	X		X	X	X	X				
Additional Member	**Additional Organization**	**Region**	**Segment Selection**									
1. Timothy Beyrle	Utilities Commission of New Smyrna Beach	FRCC	4									
2. Greg Woessner	Kissimmee Utility Authority	FRCC	1									
3. Jim Howard	Lakeland Electric	FRCC	1									
4. Lynne Mila	City of Clewiston	FRCC	3									
5. Joe Stonecipher	Beaches Energy Services	FRCC	1									
6. Cairo Vanegas	Fort Pierce Utilities Authority	FRCC	4									
43. Group	Richard Kafka	Pepco Holdings, Inc. - Affiliates	X		X		X	X				
Additional Member	**Additional Organization**	**Region**	**Segment Selection**									
1. Alvin Depew	Potomac Electric Power Company	RFC	1									
2. Carl Kinsley	Delmarva Power & Light	RFC	1									
3. Rob Wharton	Delmarva Power & Light	RFC	1									
4. Evan Sage	Potomac Electric Power Company	RFC	1									
5. Carlton Bradsaw	Delmarva Power & Light	RFC	1									
6. Jason Parsick	Potomac Electric Power Company	RFC	1									
7. Walt Blackwell	Potomac Electric Power Company	RFC	1									
8. John Conlow	Atlantic City Electric	RFC	1									
9. Randy Coleman	Delmarva Power & Light	RFC	1									

		Commenter	Organization	Industry Segment									
				1	2	3	4	5	6	7	8	9	10
44.	Group	Mallory Huggins	NERC Staff										

	Additional Member	Additional Organization	Region	Segment Selection
1.	Joel DeJesus	NERC	NA - Not Applicable	NA
2.	Mike DeLaura	NERC	NA - Not Applicable	NA
3.	Al McMeekin	NERC	NA - Not Applicable	NA
4.	Earl Shockley	NERC	NA - Not Applicable	NA
5.	Bob Cummings	NERC	NA - Not Applicable	NA
6.	David Taylor	NERC	NA - Not Applicable	NA

45.	Individual	JT Wood	Southern Company Transmission	X		X							
46.	Individual	Tom Schneider	WECC										X
47.	Individual	Hugh Conley	Allegheny Power	X									
48.	Individual	Scott Berry	Indiana Municipal Power Agency				X						
49.	Individual	Terry Habour	MidAmerican Energy Company	X									
50.	Individual	Martin Bauer	US Bureau of Reclamation					X					

1. Do you believe the proposed definition of Protection System is ready for ballot? If not, please explain why.

Summary Consideration: Almost half of the commenters felt that the definition itself was not ready for ballot.

Many commenters wanted more clarity regarding the portion of the definition addressing "voltage and current sensing inputs to protective relays ... ". The SDT inserted the words "devices providing" into the phrase to clarify that instrument transformers are included in the definition. This portion of the definition now reads:

- Voltage and current sensing devices providing inputs to protective relays,

Many commenters also suggested that the definition should limit the protective relays "to those using electrical quantities", rather than addressing this subject as a footnote in the standard. The SDT incorporated this suggestion; this portion of the definition now reads:

- "Protective relays which respond to electrical quantities".

The SDT also removed the phrase "from the station dc supply" from the "control circuitry" portion of the definition.

Some commenters suggested that "protective relays" be defined; the SDT chose not to do this as IEEE already defines this term. Many commenters also offered comments on the standard itself. These comments are being addressed in the comment forms for the standard.

The revised definition is:

Protection System:

- Protective relays which respond to electrical quantities,
- Communications systems necessary for correct operation of protective functions,
- Voltage and current sensing devices providing inputs to protective relays,
- Station dc supply, and
- Control circuitry associated with protective functions through the trip coil(s) of the circuit breakers or other interrupting devices.

Several commenters indicated that the definition should not apply to PRC-005-1. When the Board of Trustees was asked to approve an interpretation of PRC-005-1 that was written by the PSMT SDT, the board acknowledged the reliability gap identified by the

drafting team caused by the definition of "protection system" and directed that work to close this reliability gap should be given "priority." To close this reliability gap the BOT has directed that revised definition be applied to PRC-005-1 as soon as practical - not years from now. The implementation plan now proposes at least 12 months for entities to apply the new definition to PRC-005-1, and that should give entities time to apply the new definition to PRC-005-1.

Organization	Yes or No	Question 1 Comment
GDS Associates	No	1. The inserted wording "and associated circuitry from the voltage and current sensing devices" implies that the maintenance program will include the verification, monitoring, etc. of the wiring from the voltage/current sensing devices which requirement will be a bit excessive under current presentation of the standard. See comment on the standard as well. 2. SDT's additional wording such as "from the station DC supply through the trip coil(s) of the circuit breakers or other interrupting devices" can be a bit of an issue as the coils could be good at time of verification and testing, but can fail right after or due to the testing. We recommend to change the Protection System definition to read "up to the trip coils(s)" instead the word "through"
Response: Thank you for your comments. **1. The definition has been modified to say, "voltage and current sensing devices providing inputs to protective relays".** **2. The SDT disagrees, and asserts that the trip coil(s) must be included within the Protection System. The observation that the element may be good at the time of verification and testing, but fail immediately thereafter, is true of any device that is not monitored continuously for proper operating function.**		
Grant County PUD	No	1) We note that the definition of a "Protection System" has been expanded to include the trip coils and what used to be confined to batteries has now been expanded to "station DC supply." "Trip coils" is an improvement. Inasmuch as the mark-up changing "DC" to "dc" is intended to communicate a more general term as opposed to a strict definition, it leaves room for differing opinions among auditors as to what all should be included. We

Organization	Yes or No	Question 1 Comment
		support the change to exclude battery chargers since the rationale for their inclusion was never clear. The battery itself will be, without exception, the "first responder" to provide DC power to a Protection System. However, battery chargers have not been excluded under the FAQs. 2) The SPCTF's effort to define applicability in terms of "Facilities" is confusing. Additionally, it is unclear how the terms "component," "element" and "Facility" are intended to relate to one another. An assumption may be that one or more components (which are physical assets) can comprise an "element," one or more of which can be associated with an identifiable function, aligning with the five Protection System Equipment Categories, found in SPCTF's "PROTECTION SYSTEM MAINTENANCE-A Technical Reference, dated Sept. 13, 2007, and that "Facility" is as used in 4.2.1 of the Standard Development Roadmap, dated May 27, 2010. Please provide guidance on the terms relate to one another. 3) The structure of the proposed standard is less clear than the existing standard PRC-005-1 because of the potential for ambiguity between the definition of Protection System and how the term "Facilities" is applied. A suggested resolution would be to revise the definition of Protection System to resolve this ambiguity or to delete reference to 86 lockouts and auxiliary relays in the description of "Facilities." If the 86 lockout relays are to be included, they should be added as part of the DC Control Circuitry "element" (as found in the NERC Glossary) of the circuit that energizes the 86 relay, thus placing it within the definition of a "Protection System."-once-and therefore in a manner that would require only one scheduled maintenance to be performed if the testing schemes are properly set up. We do agree, however, that sudden pressure relays, reclosing relays, and other non fault detecting relays such as loss of cooling relays should not be referenced as part of the "dc control circuitry" Element.
Response: Thank you for your comments. **1. A recent Interpretation request, referring to the currently approved definition specifying "station batteries", excluded**		

Organization	Yes or No	Question 1 Comment
battery chargers. The change to "station dc supply" is intended to expand the definition to include all essential elements including battery chargers; without proper functioning of battery chargers, the battery will be discharged by normal station dc load, and will be unable to perform its function; also, there are some entities which use a charger to provide the dc supply without use of a battery. Use of "dc" rather than "DC" reflects the IEEE style guide for this term. The FAQ intentionally does not exclude battery chargers as the SDT intend to include them within PRC-005-2. **2. This comment does not appear to apply to the definition, but instead to the draft Standard itself.** **3. The SDT contends that "dc control circuitry" includes elements such as lockout relays and auxiliary relays.**		
Consumers Energy	No	1. It is unclear whether "voltage and current sensing inputs" include the instrument transformer itself, or does it pertain to only the circuitry and input to the protective relays? 2. It is not clear what is included in the component, "station dc supply" without referring to other documents (the posted Supplementary Reference and/or FAQ) for clarification. The definition should be sufficiently detailed to be clear. 3. If Protection Systems trip via AC methods, are those systems, and the associated control circuitry included?
Response: Thank you for your comments. **1. The SDT has modified the definition for clarity; the SDT intends that the output of these devices, measured at the relay, properly represents the primary quantities.** **2. There are many possible variations to "station dc supply"; it seems impossible to reflect all variations in the definition. The definition must be sufficiently general such that variations can be included.** **3. The definition has been generalized such that ac tripping is included.**		
Public Service Enterprise Group ("PSEG Companies")	No	Based on review of ballot pool comments there are still too many questions that should be resolved prior to submittal for ballot. It is suggested that a specific reference to the supplementary reference document figures 1 & 2 and the legend be added. That would

Organization	Yes or No	Question 1 Comment
		further define the protection system components and scope boundary.
Response: Thank you for your comments. The SDT has revised the definition to make it more clear as a stand-alone product.		
CenterPoint Energy	No	CenterPoint Energy believes the proposed definition of "Protection System" is technically incorrect. The present definition does not include trip coils of interrupting devices, such as circuit breakers; and correctly so, as trip coils are components of the interrupting device. A Protection System has correctly performed its function if it provides tripping voltage up to the circuit breaker trip coil. From that point, the circuit breaker can fail to timely interrupt fault current due to several factors, such as a binding mechanism that affects breaker clearing time, a broken pull rod, a bad insulating medium, or bad trip coils. Local breaker failure protection, or remote backup protection, is installed to address the various possible causes of circuit breaker failure. For correctness, the definition of "Protection System" should be "Protective relays, communication systems necessary for correct operation of protective functions, voltage and current sensing inputs to protective relays and associated circuitry from the voltage and current sensing devices, station dc supply, and control circuitry associated with protective functions from the station dc supply UP TO THE TERMINALS OF the trip coil(s) of the circuit breakers or other interrupting devices."
Response: Thank you for your comments. The SDT disagrees, and asserts that the trip coil(s) must be included within the Protection System.		
Constellation Power Generation	No	Constellation believes that this definition is to verbose, which can lead to unintended interpretations. Constellation is concerned with the term sensing inputs, which may infer that testing on instrument transformers must be completed while they are energized. This proves difficult at a generating facility where most testing is completed during planned outages when this equipment is not energized.

Organization	Yes or No	Question 1 Comment
4. Response: Thank you for your comments. The SDT has modified the definition for clarity; the SDT intends that the output of these devices, measured at the relay, properly represents the primary quantities. Testing methods are not a part of the definition.		
Hydro One	No	1. Hydro One suggests adding "Components including" in the beginning. This is because the word "components" has been used extensively throughout the standard and there is no mention of what constitutes a protection system component in the standard. The word "component" does find mention in FAQs, however, it is recommended to mention it in the main standard. The revised definition should read as follows: Protective System Components including Protective relays, communication systems necessary for correct operation of protective functions, voltage and current sensing devices providing inputs to protective relays and associated circuitry from the voltage and current sensing devices, station dc supply, and control circuitry associated with protective functions from the station dc supply through the trip coil(s) of the circuit breakers or other interrupting devices. 2. There is not enough clarity on whether a Distribution Provider (DP) will be able to clearly identify which all protection system components does it own and need to maintain. This is critical since NPCC had proposed a SAR to this effect which was not accepted by NERC citing that this concern will be incorporated in the revised standard. 3. Also, reference should be made to Project 2009-17 in which Y-W Electric Association, Inc. (Y-WEA) and Tri-State Generation and Transmission Association, Inc. (Tri-State) requested an interpretation of the term "transmission Protection System" and specifically whether protection for a radially-connected transformer protection system energized from the BES is considered a transmission Protection System and is subject to these standards.
Response: Thank you for your comments. **1. The SDT believes that the suggested text does not add to the definition, and may actually lead to additional problems,**		

Organization	Yes or No	Question 1 Comment
such as an implication that the list within the definition is incomplete. **2. This issue is properly addressed within the Standard, not within the definition.** **3. This issue relates to the application of the standard, and is not part of the definition.**		
Pacific Northwest Small Public Power Utility Comment Group	No	1. It is still unclear whether relays that respond to mechanical inputs, such as sudden pressure relays, are included in the proposed definition as protective relays. While PRC-005-2 R1 limits the scope of that particular standard to protection systems that sense electrical quantities, it is remains unclear in other standards that use the defined term whether mechanical input protections are included. 2. We suggest that "Protective Relay" also be defined, and that the definition clearly exclude devices that respond to mechanical inputs in line with the NERC interpretation of PRC-005-1 in response to the CMPWG request.
Response: Thank you for your comments. **1. The definition has been modified to specify, "Protective relays which respond to electrical quantities".** **2. "Protective relay" is defined by IEEE and does not have a unique meaning when used in a NERC standard, thus the SDT sees no need to either modify or duplicate that definition.**		
Pepco Holdings, Inc. - Affiliates	No	It is still unclear whether relays that respond to mechanical inputs, such as sudden pressure relays, are included in the proposed definition as protective relays. While PRC-005-2 R1 limits the scope of that particular standard to protection systems that sense electrical quantities, it remains unclear in other standards that use the term "Protection System" (such as PRC-004) whether devices responding to mechanical inputs

Organization	Yes or No	Question 1 Comment
		are included. As such, we suggest that the term “Protective Relay” also be defined, and that the definition clearly exclude devices that respond to mechanical inputs in line with the NERC interpretation of PRC-005-1 in response to the CMPWG request.
Response: Thank you for your comments. **The definition has been modified to specify, “Protective relays which respond to electrical quantities”.** **“Protective relay” is defined by IEEE and does not have a unique meaning when used in a NERC standard, thus the SDT sees no need to either modify or duplicate that definition.**		
PNGC Power	No	It is still unclear whether relays that respond to mechanical inputs, such as sudden pressure relays, are included in the proposed definition as protective relays. While PRC-005-2 R1 limits the scope of that particular standard to protection systems that sense electrical quantities, it is remains unclear in other standards that use the defined term whether mechanical input protections are included. We suggest that “Protective Relay” also be defined, and that the definition clearly exclude devices that respond to mechanical inputs in line with the NERC interpretation of PRC-005-1 in response to the CMPWG request.
Response: Thank you for your comments. **The definition has been modified to specify, “Protective relays which respond to electrical quantities”.** **“Protective relay” is defined by IEEE and does not have a unique meaning when used in a NERC standard, thus the SDT sees**		

Organization	Yes or No	Question 1 Comment
no need to either modify or duplicate that definition.		
Duke Energy	No	It is unclear whether the revised definition includes PTs and CTs, but it does include the wiring. We don't see a way to list the wiring in R1.1 and provide supporting compliance evidence. We believe the phrase "and associated circuitry from the voltage and current sensing devices" should be struck from the definition.
Response: Thank you for your comments. The definition has been modified as suggested.		
Indeck Energy Services	No	It presumes that all relays in a plant are Protective Systems that affect BES reliability. As discussed at the FERC Technical Conference on Standards Development, the goal of the standards program is to avoid or prevent cascading outages--specifically not loss of load. The purpose of PRC-005-2 uses the term in its global sense but there is no subset of the Protection Systems that affect reliability. PRC-005 R1 requires identification of all components. With the broad definition proposed and no separate term for only relays and other components that have been identified as affecting reliability, confusion results. If this term has its global meaning, then another term, such as Reliability Protection Systems, should be instituted to avoid confusion.
Response: Thank you for your comments. The SDT believes that this issue is one for application of the definition within various standards, not one of the definition itself.		
Lincoln Electric System	No	LES believes the proposed definition of Protection System as written remains open to interpretation. LES offers the following Protection System definition for the SDT's consideration: "Protection System" is defined as: A system that uses measurements of

Organization	Yes or No	Question 1 Comment
		voltage, current, frequency and/or phase angle to determine anomalies and trips a portion of the BES and consists of 1) Protective relays, and associated auxiliary relays, that initiate trip signals to trip coils, 2) associated communications channels, 3) current and voltage transformers supplying protective relay inputs, 4) dc station supply, excluding battery chargers, and 5) dc control trip path circuitry to the trip coils of BES connected breakers, or equivalent interrupting device, and lockout relays.
Response: Thank your for your comments. The SDT has modified the definition to address some of the suggestions. Other elements of the suggestion do not add to the existing definition, and the SDT disagrees with the suggestions regarding "trip a portion of the BES" since Special Protection Systems and UVLS may actually trip non-BES facilities, and with excluding battery chargers.		
Long Island Power Authority	No	1. LIPA suggests adding "Protection System Components including" in the beginning. This is because the word "components" has been used extensively throughout the standard and there is no mention of what constitutes a protection system component in the standard. The word "component" does find mention in FAQs, however, it is recommended to mention it in the main standard. 2. Also, LIPA proposes a change in the proposed definition (changing "voltage and current sensing inputs" to "voltage and current sensing devices providing inputs").The revised definition should read as follows: Protective System Components including Protective relays, communication systems necessary for correct operation of protective functions, voltage and current sensing devices providing inputs to protective relays and associated circuitry from the voltage and current sensing devices, station dc supply, and control circuitry associated with protective functions from the station dc supply through the trip coil(s) of the circuit breakers or other interrupting devices. 3. There is not enough clarity on whether a Distribution Provider (DP) will be able to clearly identify all protection system components it owns and needs to maintain. This is critical since NPCC had proposed a SAR to this effect which was not accepted by NERC citing that this concern will be incorporated in the revised standard.

Organization	Yes or No	Question 1 Comment
Response: Thank you for your comments. **1. The SDT believes that the suggested text does not add to the definition, and may actually lead to additional problems, such as an implication that the list within the definition is incomplete.** **2. The SDT has modified the definition as suggested regarding voltage and current sensing inputs.** **3. This issue is properly addressed within the Standard.**		
Progress Energy Carolinas	No	See comment associated with question 2.
Response: Thank you for your comments. Please see our response to your comment associated with question 2.		
Northeast Power Coordinating Council	No	1. Suggest adding “Protection System Components including” in the beginning. This is because the word “components” has been used extensively throughout the standard and there is no mention of what constitutes a protection system component in the standard. The word “component” does find mention in FAQs, however, it is recommended to mention it in the body of the standard. The revised definition should read as follows: Protection System Components including Protective relays, communication systems necessary for correct operation of protective functions, voltage and current sensing devices providing inputs to protective relays and associated circuitry from the voltage and current sensing devices, station dc supply, and control circuitry associated with protective functions from the station dc supply through the trip coil(s) of the circuit breakers or other interrupting devices. 2. An alternative definition for Protection System to eliminate the need to capitalize “component”:The collective components comprised of protective relays, communication systems necessary for correct operation of protective functions, voltage and current sensing devices providing inputs to protective relays and associated circuitry from the voltage and current sensing devices, station dc supply, and control circuitry associated with protective functions from the station dc supply through the trip coil(s) of the circuit

Organization	Yes or No	Question 1 Comment
		breakers or other interrupting devices. 3. There is not enough clarity on whether a Distribution Provider (DP) will be able to clearly identify which protection system components it does own and needs to maintain. Many DPs own and/or operate equipment identified in the existing or proposed definition. However, not all such equipment translates into a transmission Protection System. The definition needs clarification on when such equipment is a part of the transmission protection system. This is critical since NPCC had proposed a SAR to this effect which was not accepted by NERC citing that this concern will be incorporated in the revised standard. Also, reference should be made to Project 2009-17 in which Y-W Electric Association, Inc. (Y-WEA) and Tri-State Generation and Transmission Association, Inc. (Tri-State) requested an interpretation of the term "transmission Protection System" and specifically whether protection for a radially-connected transformer protection system energized from the BES is considered a transmission Protection System and is subject to these standards.
Response: Thank you for your comments. **1. The SDT believes that the suggested text does not add to the definition, and may actually lead to additional problems, such as an implication that the list within the definition is incomplete.** **2. The SDT believes that the suggested text does not add to the definition, and may actually lead to additional problems, such as an implication that the list within the definition is incomplete.** **3. This issue relates to the application of the standard, and is not part of the definition.**		
Y-W Electric Association, Inc	No	The application of this definition to Reliability Standards NUC-001-2, PER-005-1, PRC-001-1, and PRC-004-1 results in confusion as to whether relays with mechanical inputs are included or excluded from this definition. PRC-005-2_R1 contains language limiting its applicability to relays operating on electrical inputs only, but the remaining standards that rely on this definition are not so specific. This being the case, it would make much more sense to clearly define what devices are actually meant in the glossary definition rather

Organization	Yes or No	Question 1 Comment
		than leaving it up to each individual standard to do so.
Response: Thank you for your comments. The definition has been modified to specify, "Protective relays which respond to electrical quantities".		
Arizona Public Service Company	No	1. The change to the definition relative to the voltage and current sensing devices is too prescriptive. 2. Methods of determining the integrity of the voltage and current inputs into the relays to ensure reliability of the devices should be up to the discretion of the utility.
Response: Thank you for your comments. **1. The SDR modified the definition, relating to voltage and current sensing inputs, for clarity.** **2. The issue regarding methods, etc, is an issue for the standard itself, not the definition.**		
MidAmerican Energy Company	No	The definition is expanded and clarified in the language of PRC-005-2. These changes should be incorporated in the definition to insure it is used consistently in PRC-005 and any other standards where it appears. The following is a suggested revised definition:"Protection System" is defined as: A system that uses measurements of voltage, current, frequency and/or phase angle to determine anomalies and to trip a portion of the BES to provide protection for the BES and consists of 1) Protective relays for BES elements and, 2) Communications systems necessary for correct BES protection system operations and, 3) Current and voltage sensing devices supplying BES protective relay input and, 4) Station DC supply to BES protection systems excluding battery chargers, and 5) DC control trip paths to the trip coil(s) of the circuit breakers or other interrupting devices for BES elements.

Organization	Yes or No	Question 1 Comment
Response: Thank your for your comments. **The SDT modified the definition to address some of the suggestions. Other elements of the suggestion do not add to the existing definition, and the SDT disagrees with the suggestions regarding "trips a portion of the BES" since Special Protection Systems and UVLS may actually trip non-BES facilities, and with excluding battery chargers.**		
The Detroit Edison Company	No	The definition should clarify whether current and voltage transformers themselves are included.
Response: Thank you for your comments. The SDT modified the definition to state, "voltage and current sensing devices providing inputs to protective relays".		
Avista Corp	No	The modified definition of Protection System now refers to "functions" rather than "devices." What are the "functions?" This new term adds confusion without being defined in the standard.
Response: Thank you for your comments. The "functions" are the accumulated performance of the various portions of the Protection System. This term is used to distinguish "protective functions" from annunciation, signaling, or information.		
American Electric Power	No	The term "station" should either be defined or removed from the definition, as it implies transmission and distribution assets while the term "plant" is used to define generation assets. It would suffice to simply refer to the "DC Supply".
Response: Thank you for your comments. The term "station" is used in a generic sense to apply to either "substation" or "generation station" facilities.		
Xcel Energy	No	We recommend modifying the language to remove circuit breakers altogether: "...through the trip coil(s) of the circuit breakers or other interrupting devices."
Response: Thank you for your comments. The SDT believes that circuit breakers are by far the most prevalent interrupting		

Organization	Yes or No	Question 1 Comment
devices, and to generalize as suggested will lead to industry confusion.		
Allegheny Power	Yes	
American Transmission Company	Yes	
Bonneville Power Administration	Yes	
Clark Public Utilities	Yes	
Dynegy Inc.	Yes	
E.ON U.S.	Yes	
Entergy Services	Yes	
Exelon	Yes	
Indiana Municipal Power Agency	Yes	
Manitoba Hydro	Yes	
MEAG Power	Yes	
Northeast Utilities	Yes	
PacifiCorp	Yes	

Organization	Yes or No	Question 1 Comment
Springfield Utility Board	Yes	
US Bureau of Reclamation	Yes	
We Energies	Yes	
WECC	Yes	
Western Area Power Administration	Yes	
Florida Municipal Power Agency	Yes	Because the definition changes the scope of what a protection system covers, increasing that scope, the definition should not be balloted separately from PRC-005-2 so that the industry knows what is being committed to. For instance, the circuitry connecting the voltage and current sensing devices to the relays is a scope expansion. Station DC supply increases the scope to include the charger, etc. This scope increase needs to have an appropriate implementation period.
Response: Thank you for your comments. When the Board of Trustees was asked to approve an interpretation of PRC-005-1 that was written by the PSMT SDT, the board acknowledged the reliability gap identified by the drafting team caused by the definition of "protection system" and directed that work to close this reliability gap should be given "priority." To close this reliability gap the BOT has directed that revised definition be applied to PRC-005-1 as soon as practical - not years from now. The implementation plan now proposes at least 12 months for entities to apply the new definition to PRC-005-1, and that should give entities time to apply the new definition to PRC-005-1.		
NERC Staff	Yes	Still, to make sure the reference to dc supply is more generic than just "station dc supply," NERC staff suggests the following modified definition of Protection System:"Protective relays, communication systems necessary for correct operation of protective functions, voltage and current sensing inputs to protective relays and associated circuitry from the voltage and current sensing devices, and any dc supply or control circuitry associated with

Organization	Yes or No	Question 1 Comment
		the preceding devices."
Response: Thank you for your comments. The SDT believes that modifying the definition as suggested does not add to the definition.		
FirstEnergy	Yes	1. The definition is ready for ballot with the addition of auxiliary relays to the definition of protective relays. There is a potential for an entity to determine that auxiliary relays do not perform a protection function since they typically do not sense fault current. Furthermore, one could determine that the term "circuitry" only refers to the wiring to connect the various DC devices together. We suggest adding "auxiliary relays necessary for correct operation of protective devices" to improve clarity of the definition. 2. With regard to the change from the current definition phrase "station batteries" to the new definitions phrase "station DC supply", it may not be clear to the reader that this includes battery chargers. To alleviate future interpretation issues, we suggest adding a clarifying statement at the end of the definition, such as "The station DC supply includes the battery, battery charger, and other DC components". 3. The acronym "dc" should be capitalized.
Response: Thank you for your comments. **1. The SDT believes that auxiliary relays are implicitly part of the control circuitry. The Supplementary Reference as posted in June 2010 (Section 15.3, page 22) specifically states that "the dc control circuitry also includes each auxiliary tripping relay …".** **2. Clarifications such as this properly belong in supplementary materials. This is described in the FAQ posted in June 2010 (FAQ II.5.A).** **3. The term, "dc", rather than "DC", reflects the NERC style guide.**		
ReliabilityFirst Corp.	Yes	The definition should probably include interrupting devices as the Protection System is of

Organization	Yes or No	Question 1 Comment
		little value if the fault cannot be interrupted.
Response: Thank you for your comments. Interrupting devices are not within the scope of this project.		
South Carolina Electric and Gas	Yes	The new definition effective date should be directly linked to the approval and implementation schedule of PRC-005-2 to avoid any possible compliance issues under the current PRC-005 standard.
Response: Thank you for your comments. When the Board of Trustees was asked to approve an interpretation of PRC-005-1 that was written by the PSMT SDT, the board acknowledged the reliability gap identified by the drafting team caused by the definition of "protection system" and directed that work to close this reliability gap should be given "priority." To close this reliability gap the BOT has directed that revised definition be applied to PRC-005-1 as soon as practical - not years from now. The implementation plan now proposes at least 12 months for entities to apply the new definition to PRC-005-1, and that should give entities time to apply the new definition to PRC-005-1.		
Ameren	Yes	1. We agree that the definition provides clarity and will enhance the reliability of the Protection Systems to which it is applicable; however, we suggest that a Glossary term for Protective Relay be added in order to clarify in all standards inclusion of relays that measure voltage, current, frequency and/or phase angle to determine anomalies, as stated in PRC-005-2 R1. 2. We believe there should be a direct linkage of the definition's effective date to the approval and implementation schedule of PRC-005-2. Since this new definition is directly linked to the proposed revised standard, it would be premature to make this definition effective prior to the effective date of the new standard. 3. We agree that the voltage and current inputs at the protective relays correctly identifies that component, that this excludes the instrument transformer itself. 4. We suggest replacing "to" with "at", and omitting "and associated circuitry from the voltage and current sensing devices."

Organization	Yes or No	Question 1 Comment
Response: Thank you for your comments. **1. Thank you. "Protective relay" is defined by IEEE and does not have a unique meaning when used in a NERC standard, thus the SDT sees no need to either modify or duplicate that definition.** **2. When the Board of Trustees was asked to approve an interpretation of PRC-005-1 that was written by the PSMT SDT, the board acknowledged the reliability gap identified by the drafting team caused by the definition of "protection system" and directed that work to close this reliability gap should be given "priority." To close this reliability gap the BOT has directed that revised definition be applied to PRC-005-1 as soon as practical - not years from now. The implementation plan now proposes at least 12 months for entities to apply the new definition to PRC-005-1, and that should give entities time to apply the new definition to PRC-005-1.** **3. Based on other industry comments, the SDT has modified the definition to include these devices.** **4. The SDT modified this portion of the definition to state, "voltage and current sensing devices providing inputs to protective relays".**		
SERC Protection and Control Sub-committee (PCS)	Yes	We agree that the definition provides clarity and will enhance the reliability of the Protection Systems to which it is applicable; however, we believe there should be a direct linkage of the definition's effective date to the approval and implementation schedule of PRC-005-2. Since this new definition is directly linked to the proposed revised standard, it would be premature to make this definition effective prior to the effective date of the new standard.
Response: Thank you for your comments. When the Board of Trustees was asked to approve an interpretation of PRC-005-1 that was written by the PSMT SDT, the board acknowledged the reliability gap identified by the drafting team caused by the definition of "protection system" and directed that work to close this reliability gap should be given "priority." To close this reliability gap the BOT has directed that revised definition be applied to PRC-005-1 as soon as practical - not years from now. The implementation plan now proposes at least 12 months for entities to apply the new definition to PRC-005-1, and that should give entities time to apply the new definition to PRC-005-1.		
Southern Company	Yes	We agree that the definition provides clarity and will enhance the reliability of the Protection Systems to which it is applicable. However, we feel that there needs to be a direct linkage

Organization	Yes or No	Question 1 Comment
Transmission		of the definition's effective date to the approval and implementation schedule of PRC-005-2. Since this new definition is directly linked to the proposed revised standard, it would be premature to make this definition effective prior to the effective date of the new standard.
Response: Thank you for your comments. When the Board of Trustees was asked to approve an interpretation of PRC-005-1 that was written by the PSMT SDT, the board acknowledged the reliability gap identified by the drafting team caused by the definition of "protection system" and directed that work to close this reliability gap should be given "priority." To close this reliability gap the BOT has directed that revised definition be applied to PRC-005-1 as soon as practical - not years from now. The implementation plan now proposes at least 12 months for entities to apply the new definition to PRC-005-1, and that should give entities time to apply the new definition to PRC-005-1.		
Santee Cooper	Yes	We agree with the proposed definition. However, the effective date of this definition should be linked to the implementation schedule of PRC-005-2. This definition should not be made effective prior to the new standard.
Response: Thank you for your comments. When the Board of Trustees was asked to approve an interpretation of PRC-005-1 that was written by the PSMT SDT, the board acknowledged the reliability gap identified by the drafting team caused by the definition of "protection system" and directed that work to close this reliability gap should be given "priority." To close this reliability gap the BOT has directed that revised definition be applied to PRC-005-1 as soon as practical - not years from now. The implementation plan now proposes at least 12 months for entities to apply the new definition to PRC-005-1, and that should give entities time to apply the new definition to PRC-005-1.		

2. Do you agree with the implementation plan for the revised definition of Protection System? The implementation plan has two phases – the first phase gives entities at least six months to update their protection system maintenance and testing program; the second phase starts when the protection system maintenance and testing program has been updated and requires implementation of any additional maintenance and testing associated with the program changes by the end of the first complete maintenance and testing cycle described in the entity's revised program. If you disagree with this implementation plan, please explain why.

Summary Consideration: Most commenters felt that the definition and its implementation should be linked to the approval and implementation of the revised standard. The retirement date for the existing definition, in the Implementation Plan, was developed upon advice of NERC Compliance staff and is intended to address a reliability gap caused by the existing definition. When the Board of Trustees was asked to approve an interpretation of PRC-005-1 that was written by the PSMT SDT, the board acknowledged the reliability gap identified by the drafting team caused by the definition of "protection system" and directed that work to close this reliability gap should be given "priority." To close this reliability gap the BOT has directed that revised definition be applied to PRC-005-1 as soon as practical - not years from now.

Additional commenters indicated that a 6-month implementation schedule for modifying their Protection System maintenance and testing program is insufficient. The SDT revised the first phase of the implementation plan to 12-months. The implementation plan now proposes at least 12 months for entities to apply the new definition to PRC-005-1, and that should give entities time to apply the new definition to PRC-005-1.

Organization	Yes or No	Question 2 Comment
WECC		Compliance agrees only if the original "Protection System" definition is in place for the interim implementation period, so that only the changes and or additions to the "Protection System" definition are covered under the proposed implementation plan.
Response: Thank you for your comments. The retirement date for the existing definition, in the Implementation Plan, was developed upon advice of NERC Compliance staff and is intended to address a reliability gap caused by the existing		

Organization	Yes or No	Question 2 Comment
definition.		
Public Service Enterprise Group ("PSEG Companies")	No	1. The draft implementation plan general considerations have a requirement to identify all the protection system components addressed under PRC-005-1 and PRC-005-2 for potential audits while modifying the existing programs. The standard revision will require extensive reviews and possibly add significant amounts of components to the program. This is listed as a requirement without a specific deadline other than supplying the information as part of an audit. If an audit is scheduled or announced early in the implementation period the evidence is required. The requirement for identifying all the components in the implementation process should have a time specified with bases for the starting point. 2. Where additional definition of a protection system scope boundary is determined as a result of the standard revisions, the implementation plan completion requirement should be at the end of next maintenance interval of that added protection system component. There may be situations where additional scope as determined by the additions or revisions to the standard and/or supporting reference material (e.g., an auxiliary contact input in a tripping scheme) would require going back and taking equipment out of service to perform that one check. To keep the maintenance and outage schedules coordinated the new requirements should be at the end of current cycles, not beginning.
Response: Thank you for your comments. **1. The posted implementation plan for the definition specifies that the program be updated by the end of the first calendar quarter six months following regulatory approvals. This establishes the requested schedule for the definition alone. Implementation of PRC-005-2 is discussed in the implementation plan for the standard.** **2. The posted implementation plan for the definition provides for the requested implementation by specifying, "and implement any additional maintenance and testing (required in Requirement R2 of PRC-005-1 – Transmission and Generation Protection System Maintenance and Testing) by the end of the first complete maintenance and testing cycle described in the entity's program description and basis document(s) following establishment of the program changes**		

Organization	Yes or No	Question 2 Comment
resulting from the revised definition".		
Ameren	No	As noted above, the implementation plan should be linked to the approval of PRC-005-2. Since this new definition is directly linked to the proposed revised standard, it would be premature to make this definition effective prior to the effective date of the new standard. Otherwise, entities must address equipment, documentation, work management process, and employee training changes needed for compliance twice within an unreasonably short timeframe. If PRC-005-2 receives regulatory approval in 1st quarter 2011, PSMP implementation along with this revised definition should be effective at the beginning of 2012 to coincide with the calendar year. These nine months will be needed to fully assess and address the necessary maintenance program documentation changes, maintenance system tool revisions, and personnel training needed to incorporate this new definition into our program.
Response: Thank you for your comments. The retirement date for the existing definition, in the Implementation Plan, was developed upon advice of NERC Compliance staff and is intended to address a reliability gap caused by the existing definition. When the Board of Trustees was asked to approve an interpretation of PRC-005-1 that was written by the PSMT SDT, the board acknowledged the reliability gap identified by the drafting team caused by the definition of "protection system" and directed that work to close this reliability gap should be given "priority." To close this reliability gap the BOT has directed that revised definition be applied to PRC-005-1 as soon as practical - not years from now. The implementation plan now proposes at least 12 months for entities to apply the new definition to PRC-005-1, and that should give entities time to apply the new definition to PRC-005-1.		
SERC Protection and Control Sub-committee (PCS)	No	As noted above, the implementation plan should be linked to the approval of PRC-005-2. Since this new definition is directly linked to the proposed revised standard, it would be premature to make this definition effective prior to the effective date of the new standard.
Response: Thank you for your comments. When the Board of Trustees was asked to approve an interpretation of PRC-005-1 that was written by the PSMT SDT, the board acknowledged the reliability gap identified by the drafting team caused by the definition of "protection system" and directed that work to close this reliability gap should be given "priority." To close this		

Organization	Yes or No	Question 2 Comment
reliability gap the BOT has directed that revised definition be applied to PRC-005-1 as soon as practical - not years from now. The implementation plan now proposes at least 12 months for entities to apply the new definition to PRC-005-1, and that should give entities time to apply the new definition to PRC-005-1.		
Florida Municipal Power Agency	No	As stated in response to Question 1, it is inappropriate to change the definition of Protection System for PRC-005-1 and the new definition should wait for the new standard. In all honesty, the new PRC-005-2 lays out the program anyway, so, any change to the definition needs to be accompanied by the commitment associated with that change.
Response: Thank you for your comments. When the Board of Trustees was asked to approve an interpretation of PRC-005-1 that was written by the PSMT SDT, the board acknowledged the reliability gap identified by the drafting team caused by the definition of "protection system" and directed that work to close this reliability gap should be given "priority." To close this reliability gap the BOT has directed that revised definition be applied to PRC-005-1 as soon as practical - not years from now. The implementation plan now proposes at least 12 months for entities to apply the new definition to PRC-005-1, and that should give entities time to apply the new definition to PRC-005-1.		
American Electric Power	No	As written, the implementation plan only specifies a time frame for entities to update their documentation for PRC-005-1 and PRC-005-2 compliance. The implementation plan also needs to give entities a time frame to address any required changes to their documentation for other standards that use the term "Protection System", including but not limited to NUC-001-2, PER-005-1, PRC-001-1, etc.
Response: Thank you for your comments. An assessment of the changes to the definition (posted with the first comment period), relative to the entire body of other NERC Standards using this defined term, determined that the changes are consistent with the other existing uses of the definition, and that no other implementation plan considerations were necessary. No comments were received relative to this assessment.		
American Transmission Company	No	1. ATC does not agree to the implementation plan proposed. While it makes common sense to proceed with R1 prior to proceeding with implementing R2, R3, and R4, the timeline to be compliant for R1 is too short. It will take a considerable amount of

Organization	Yes or No	Question 2 Comment
		resources to migrate the maintenance plan from today's standard to the new standard in phase one. ATC recommends that time to develop and update the revised program be increased to at least one year followed by a transition time for the entity to collect all the necessary field data for the protection system within its first full cycle of testing. (In ATC's case would be 6 years) To address phase two, ATC believes human and technological resources will be overburdened to implement this revised standard as written. The transition to implementing the new program will take another full testing cycle once the program has been updated. Increased documentation and obtaining additional resources to accomplish this will be challenging. 2. Implementation of PRC-005-2 will impact ATC in the following manner: a. Increase costs: double existing maintenance costs. b. Since there will be a doubling of human interaction (or more), it is expected that failures due to human error will increase, possibly proportionately. c. Breaker maintenance may need to be aligned with protection scheme testing, which will always contain elements that are include in the non-monitored table for 6 yr testing. d. ATC is developing standards for redundant bus and transformer protection schemes. This would allow ATC to test the protection packages without taking the equipment out of service. Further if one system fails, there is full redundancy available. With the current version of PRC-005-2, ATC would need to take an outage to test the protection schemes for a transformer or a bus, there is not an incentive to install redundant schemes. ATC is working with a condition based breaker maintenance program. This program's value would be greatly diminished under PRC-005-2 as currently written. 3. Consideration also needs to be given for other NERC standards expected to be passed and in the implementation stage at the same time, such as the CIP standards.

Response: Thank you for your comments.

1. **This comment appears to address implementation of the draft Standard, not the definition.**
2. **This comment appears to address implementation of the draft Standard, not the definition.**

Organization	Yes or No	Question 2 Comment
3. Thank you.		
Duke Energy	No	Definition should be implemented concurrently with PRC-005-2.
Response: Thank you for your comments. When the Board of Trustees was asked to approve an interpretation of PRC-005-1 that was written by the PSMT SDT, the board acknowledged the reliability gap identified by the drafting team caused by the definition of "protection system" and directed that work to close this reliability gap should be given "priority." To close this reliability gap the BOT has directed that revised definition be applied to PRC-005-1 as soon as practical - not years from now. The implementation plan now proposes at least 12 months for entities to apply the new definition to PRC-005-1, and that should give entities time to apply the new definition to PRC-005-1.		
Consumers Energy Company	No	For entities that may not have included all elements reflected in the modified definition within their PRC-005-1 program, 6-months following regulatory approvals may not be sufficient to identify all relevant additional components, develop maintenance procedures, develop maintenance and testing intervals, develop a defendable technical basis for both the procedures and intervals, and train personnel on the newly implemented items. We propose that a 12-month schedule following regulatory approvals may be more practical.
Response: Thank you for your comments. The Implementation Plan has been modified to allow a 12-month schedule as suggested. However, to agree with the SDT Guidelines established by NERC, "end of the first calendar quarter" was modified to "first day of the first calendar quarter".		
Exelon	No	PECO would like to have the implementation plan provide at least 1 year for full implementation of the new standard. This will provide adequate time for development of documentation, training for all personnel, and testing then implementation of the new process(es).
Response: Thank you for your comments. The Implementation Plan has been modified to allow a 12-month schedule as suggested. However, to agree with the SDT Guidelines established by NERC, "end of the first calendar quarter" was modified to "first day of the first calendar quarter".		

Organization	Yes or No	Question 2 Comment
Progress Energy Carolinas	No	Progress Energy does not believe that the definition should be implemented separately from and prior to the implementation of PRC-005-2. We believe there should be a direct linkage between the definition's effective date to the approval and implementation schedule of PRC-005-2. Since this new definition should be directly linked to the proposed revised standard, it would be premature to make this new definition effective prior to the effective date of the new standard. We believe that changes to the maintenance program should be driven by the revision of the PRC standard, not by the revision of a definition.
Response: Thank you for your comments. When the Board of Trustees was asked to approve an interpretation of PRC-005-1 that was written by the PSMT SDT, the board acknowledged the reliability gap identified by the drafting team caused by the definition of "protection system" and directed that work to close this reliability gap should be given "priority." To close this reliability gap the BOT has directed that revised definition be applied to PRC-005-1 as soon as practical - not years from now. The implementation plan now proposes at least 12 months for entities to apply the new definition to PRC-005-1, and that should give entities time to apply the new definition to PRC-005-1.		
Pepco Holdings, Inc. - Affiliates	No	The 6 month time frame to update the revised maintenance and testing program is too short. Specifically identifying and documenting each component not presently individually identified in our maintenance databases, auxiliary relays, lock-out relays, etc. will require a major effort. We recommend at least one year.
Response: Thank you for your comments. The Implementation Plan has been modified to allow a 12-month schedule as suggested. However, to agree with the SDT Guidelines established by NERC, "end of the first calendar quarter" was modified to "first day of the first calendar quarter".		
Indeck Energy Services	No	The definition should not be implemented separate from PRC-002-2. The PRC-002-2 implementation plan would be adequate.
Response: Thank you for your comments. When the Board of Trustees was asked to approve an interpretation of PRC-005-1 that was written by the PSMT SDT, the board acknowledged the reliability gap identified by the drafting team caused by the definition of "protection system" and directed that work to close this reliability gap should be given "priority." To close this		

Organization	Yes or No	Question 2 Comment
reliability gap the BOT has directed that revised definition be applied to PRC-005-1 as soon as practical - not years from now. The implementation plan now proposes at least 12 months for entities to apply the new definition to PRC-005-1, and that should give entities time to apply the new definition to PRC-005-1.		
E.ON U.S.	No	The first phase is only 3 months (per Implementation Plan) to update the program, not the 6 months as listed in this question. E.ON U.S. recommends that it should be a minimum of 6 months, regardless.
Response: Thank you for your comments. The Implementation Plan for the definition specifically indicated a 6-month (increased to 12-months in response to comments) implementation schedule to update the program. However, to agree with the SDT Guidelines established by NERC, "end of the first calendar quarter" was modified to "first day of the first calendar quarter".		
Santee Cooper	No	The implementation plan should be linked to the approval of PRC-005-2. The definition should not be made effective prior to the new standard.
Response: Thank you for your comments. When the Board of Trustees was asked to approve an interpretation of PRC-005-1 that was written by the PSMT SDT, the board acknowledged the reliability gap identified by the drafting team caused by the definition of "protection system" and directed that work to close this reliability gap should be given "priority." To close this reliability gap the BOT has directed that revised definition be applied to PRC-005-1 as soon as practical - not years from now. The implementation plan now proposes at least 12 months for entities to apply the new definition to PRC-005-1, and that should give entities time to apply the new definition to PRC-005-1.		
Xcel Energy	No	1. The implementation plans for both the definition and standard are confusing. Does this imply a "clean slate" approach can be used? i.e. do entities have up to the first interval window to complete the maintenance or must they have it complete on day 1 of the standard and again by the first interval? 2. It also appears that the implementation plans are conflicting whereby one requires full compliance and the other allows 6 months...the definition implementation plan also refer

Organization	Yes or No	Question 2 Comment
		to a basis document though the standard does not require one.
Response: Thank you for your comments. **1. The implementation plan for the definition specifically states that the entity has until the end of the first full interval established per their program and basis documents to implement the updated program (i.e. complete the maintenance).** **2. The Implementation Plan for the definition specifically indicated a 6-month (increased to 12-months in response to comments) implementation schedule to update the program. However, to agree with the SDT Guidelines established by NERC, "end of the first calendar quarter" was modified to "first day of the first calendar quarter". PRC-005-1 requires basis documents, where PRC-005-2 (draft) does not, as maximum intervals and minimum activities are prescribed within the standard.**		
Manitoba Hydro	No	The proposed implementation stage of 6 months is much too stringent and an 18 month window is suggested.
Response: Thank you for your comments. The Implementation Plan has been modified to allow a 12-month schedule. However, to agree with the SDT Guidelines established by NERC, "end of the first calendar quarter" was modified to "first day of the first calendar quarter".		
MidAmerican Energy Company	No	The protection system definition implementation plan should be consistent with the implementation plan of PRC-005-2 R1. Actual maintenance requirements implementation should be as required by the PRC-005-2 implementation plan and should not be included in the implementation plan for the protection system definition.
Response: Thank you for your comments.		
Southern Company Transmission	No	The revised definition should not be made effective until the revised PRC-005-2 is in effect. There is no definite reliability benefit to balloting this definition prior to the revised standard. If balloted and approved, entities would definitely have to modify their Protection System Maintenance and Testing Program methodology, but there is no obligation to or guarantee

Organization	Yes or No	Question 2 Comment
		of any additional maintenance being performed. PRC-005-2 includes this definition, the maintenance activities, and the intervals that will ensure execution of the maintenance and testing.
Response: Thank you for your comments. When the Board of Trustees was asked to approve an interpretation of PRC-005-1 that was written by the PSMT SDT, the board acknowledged the reliability gap identified by the drafting team caused by the definition of "protection system" and directed that work to close this reliability gap should be given "priority." To close this reliability gap the BOT has directed that revised definition be applied to PRC-005-1 as soon as practical - not years from now. The implementation plan now proposes at least 12 months for entities to apply the new definition to PRC-005-1, and that should give entities time to apply the new definition to PRC-005-1.		
Indiana Municipal Power Agency	No	The second part of the implementation effective date does not make sense and might be wrong. The second part talks about implementing any additional maintenance and testing (required in R2 of PRC-005-1- Transmission and Generation Protection system Maintenance and Testing); this is referring to version 1 of the standard and there should be no additional maintenance and testing added from version 1 of the standard, just version 2 which is the new version. Overall, the wording on this implementation plan needs to be made more clear about how the implementation plan will work.
Response: Thank you for your comments. The second part of the implementation plan for the definition allows the entity to implement any program changes that result from the modified definition systematically via the intervals establised to address those changes. The SDT believes that this portion of the implementation plan is clear.		
US Bureau of Reclamation	No	The Time Horizons are too narrow for the implementation of the standard as written. The SDT appears to have not accounted for the data analysis associated with performance based systems. The data collection, analysis, and subsequent decisions associated development of a maintenance program and its justification do not occur overnight especially with larger utilities. In addition, this new standard will require complete rewrite of an entities internal maintenance programs. The internal processes associated with these vary based on the size of the entity and its organizational structure. Since this standard is

Organization	Yes or No	Question 2 Comment
		so invasive into the internal decisions concerning maintenance, the standard should allow at least 18 months for entities to rewrite their internal maintenance programs to meet the program development requirements and 18 months to train the staff in the new program, incorporate the program into the entities compliance processes, and to implement the new program.
Response: Thank you for your comments. The Implementation Plan has been modified to allow a 12-month schedule to update the entities' program in accoradnce with the modified definition.		
Hydro One	No	1. The time provided for the first phase "at least six months" is too open ended and does not give entities a clear timeline. HYDRO ONE suggests 1 year for the first phase. 2. Also, HYDRO ONE suggests phasing out the second phase in stages.
Response: Thank you for your comments. **1. The Implementation Plan has been modified to allow a 12-month schedule as suggested. However, to agree with the SDT Guidelines established by NERC, "end of the first calendar quarter" was modified to "first day of the first calendar quarter".** **2. The SDT does not understand this comment.**		
Long Island Power Authority	No	1. The time provided for the first phase "at least six months" is too open ended and does not give entities a clear timeline. LIPA suggests 1 year for the first phase. 2. It is also suggested phasing out the second phase in stages.
Response: Thank you for your comments. **1. The Implementation Plan has been modified to allow a 12-month schedule as suggested. However, to agree with the SDT Guidelines established by NERC, "end of the first calendar quarter" was modified to "first day of the first calendar quarter".**		

Organization	Yes or No	Question 2 Comment
2. The SDT does not understand this comment.		
Northeast Power Coordinating Council	No	1. The time provided for the first phase "at least six months" is too open ended and does not give entities a clear timeline. Suggest 1 year for the first phase. 2. Suggest phasing out the second phase in stages.
Response: Thank you for your comments. **1. The Implementation Plan has been modified to allow a 12-month schedule as suggested. However, to agree with the SDT Guidelines established by NERC, "end of the first calendar quarter" was modified to "first day of the first calendar quarter".** **2. The SDT does not understand this comment.**		
Northeast Utilities	No	The time provided for the first phase "at least six months" is too open ended and does not give entities a clear timeline. Northeast Utilities suggests 1 year for the first phase.
Response: Thank you for your comments. The Implementation Plan has been modified to allow a 12-month schedule as suggested. However, to agree with the SDT Guidelines established by NERC, "end of the first calendar quarter" was modified to "first day of the first calendar quarter".		
Grant County PUD	No	There needs to be more clarity concerning the role of the 3 year audit during the implementation phase. Do the audit tests consist of varying proportions of -1 criteria and -2 criteria?
Response: Thank you for your comments. This comment appears to address implementation of the revised standard, not the revised definition.		
Constellation Power Generation	No	This does not match the implementation proposed for PRC-005-2. The implementation plan for revising the program is 6 months based on the "definition implementation" but R1 in

Organization	Yes or No	Question 2 Comment
		PRC-005-2 has a 3 month implementation plan.
Response: Thank you for your comments. The intent is to implement the definition and apply it to PRC-005-1 before PRC-005-2 becomes effective. When the Board of Trustees was asked to approve an interpretation of PRC-005-1 that was written by the PSMT SDT, the board acknowledged the reliability gap identified by the drafting team caused by the definition of "protection system" and directed that work to close this reliability gap should be given "priority." To close this reliability gap the BOT has directed that revised definition be applied to PRC-005-1 as soon as practical - not years from now. The implementation plan now proposes at least 12 months for entities to apply the new definition to PRC-005-1, and that should give entities time to apply the new definition to PRC-005-1.		
The Detroit Edison Company	No	This implementation plan and the one for PRC-005-2 should be consistent.
Response: Thank you for your comments. The intent is to implement the definition and apply it to PRC-005-1 before PRC-005-2 becomes effective. When the Board of Trustees was asked to approve an interpretation of PRC-005-1 that was written by the PSMT SDT, the board acknowledged the reliability gap identified by the drafting team caused by the definition of "protection system" and directed that work to close this reliability gap should be given "priority." To close this reliability gap the BOT has directed that revised definition be applied to PRC-005-1 as soon as practical - not years from now. The implementation plan now proposes at least 12 months for entities to apply the new definition to PRC-005-1, and that should give entities time to apply the new definition to PRC-005-1.		
Entergy Services	No	1. We agree with the definition, however we do not agree with the implementation plan. We believe implementation of the definition needs to coincide with the implementation of Standard PRC-005-2. To do otherwise, will cause entities to address equipment, documentation, work management process, and employee training changes needed for compliance twice within an unreasonably short timeframe. 2. Additional time, 12 months minimum, will be needed to fully assess and address the necessary maintenance program documentation changes, maintenance system tool revisions, and personnel training needed to incorporate this new definition into our

Organization	Yes or No	Question 2 Comment
		program.
Response: Thank you for your comments. **1. When the Board of Trustees was asked to approve an interpretation of PRC-005-1 that was written by the PSMT SDT, the board acknowledged the reliability gap identified by the drafting team caused by the definition of "protection system" and directed that work to close this reliability gap should be given "priority." To close this reliability gap the BOT has directed that revised definition be applied to PRC-005-1 as soon as practical - not years from now. The implementation plan now proposes at least 12 months for entities to apply the new definition to PRC-005-1, and that should give entities time to apply the new definition to PRC-005-1.** **2. The Implementation Plan for the definition has been modified to allow a 12-month schedule as suggested. However, to agree with the SDT Guidelines established by NERC, "end of the first calendar quarter" was modified to "first day of the first calendar quarter".**		
Clark Public Utilities	No	1. While the drafting team has done a great job of simplifying the implementation plan from the original draft 1 language, the current language has some ambiguities. I do not understand what the term "the end of the first calendar quarter six months following regulatory approvals" means. What is wrong with just saying "within nine months (or six months or twelve months) following regulatory approvals? Using the current language I would be inclined to assume it is six months so I can avoid a dispute (and quite possibly a notice of alleged violation) over a date. 2. Also, I am not sure what the term "the end of the first complete maintenance and testing cycle described in the entity's program description" means. It is quite likely that a registered entity will make the required definition change to its maintenance program (at approximately six months) and wind up with devices that need to be tested. Is the implementation plan attempting to provide some allowed time delay so the registered entity will not be out of compliance even though it has devices that are now beyond the maximum testing interval due to the definition change? The existing language implies that within approximately six months of regulatory approval, the maintenance program needs to be changed to incorporate the revised definition for Protection System.

Organization	Yes or No	Question 2 Comment
		However, the effective date for the revised maintenance program is going to be some date that corresponds with the end of the first complete maintenance and testing cycle in that program. I really don't understand what that time period is and I believe the drafting team needs to put in something that clears up this confusion. By testing cycle do you mean "maximum interval" as shown in the PRC-005 table? Do you mean the "maximum interval" that a registered entity includes in their maintenance program? If so, do you intend the implementation to be a different date for protection devices depending on the maximum testing interval? Or do you envision some date beyond the six months where the entire maintenance program (with the definition change) becomes effective and any registered entities with out-of-compliance issues would need to file mitigation plans?
Response: Thank you for your comments. **1. Within the US, NERC Standards are not mandatory and enforceable until approval by FERC. As established within the NERC Drafting Team Guidelines, the effective dates must be "the first day of the first calendar quarter after entities are expected to be compliant". The effective dates are always on the first day of a calendar quarter to make it easier for entities to track the effective dates of requirements. To agree with the SDT Guidelines established by NERC, "end of the first calendar quarter" was modified to "first day of the first calendar quarter".** **2. Continuing on the example above, if an entity then establishes a 3-calendar-year schedule for additional components as addressed by the definition, the entity must be fully compliant by the end of 2014.**		
We Energies	No	Wisconsin Electric does not agree with the six-month implementation requirement in the first phase. It is our position that a longer adjustment time is needed for entities to update their maintenance programs to implement the new definition. The new definition results in a significant increase in the scope of affected equipment and the documentation required to implement the program, and requires additional resources beyond present levels, including hiring and training. We estimate that this effort will require three years to fully implement.
Response: Thank you for your comments. The Implementation Plan for the definition has been modified to allow a 12-month		

Organization	Yes or No	Question 2 Comment
schedule to update the program. The entity then has the full interval as established within their program to implement the program for added components.		
Allegheny Power	Yes	
Arizona Public Service Company	Yes	
Avista Corp	Yes	
Bonneville Power Administration	Yes	
Dynegy Inc.	Yes	
FirstEnergy	Yes	
Lincoln Electric System	Yes	
MEAG Power	Yes	
NERC Staff	Yes	
Pacific Northwest Small Public Power Utility Comment Group	Yes	
PacifiCorp	Yes	
PNGC Power	Yes	

Organization	Yes or No	Question 2 Comment
ReliabilityFirst Corp.	Yes	
South Carolina Electric and Gas	Yes	
Springfield Utility Board	Yes	
Western Area Power Administration	Yes	
Y-W Electric Association, Inc	Yes	

NERC
NORTH AMERICAN ELECTRIC RELIABILITY CORPORATION

Consideration of Comments on 2nd Draft of the Standard for Protection System Maintenance and Testing Project 2007-17

The Protection System Maintenance and Testing Standard Drafting Team thanks all commenters who submitted comments on the 2nd draft of the PRC-005-2 standard for Protection System Maintenance and Testing. This standard was posted for a 45-day public comment period from June 11, 2010 through July 16, 2010. The stakeholders were asked to provide feedback on the standards through a special Electronic Comment Form. There were 58 sets of comments, including comments from more than 130 different people from over 70 companies representing 8 of the 10 Industry Segments as shown in the table on the following pages.

Many commenters objected to the establishment of maximum allowable intervals and offered comments on most of the individual activities and intervals within the Tables.

- The SDT responded that "FERC Order 693 and the approved SAR assigned the SDT to develop a Standard with maximum allowable intervals and minimum maintenance activities."

To provide more clarity, the SDT completely rearranged and revised the Tables.

- The Tables now consist of one table for each of the five Protection System component types, as well as a sixth table to address monitoring and alarming requirements to support extended intervals for monitored Protection System components.

Many commenters disagreed with some of the VRF and VSL assignments.

- The SDT made several modifications to the VRFs and VSLs that are in-keeping with the guidance provided by NERC and FERC.

Other comments were offered regarding Time Horizons, resulting in modification of the Time Horizons for both R3 and R4 from Long-Term Planning to Operations Planning.

In response to suggestions relative to the Measures, the SDT made changes to all four Measures.

Commenters were appreciative for the information contained in the two reference documents, but indicated a preference for some of the information to be included within the body of the Standard.

- In response, the SDT included the definitions of those terms exclusive to this standard, specifically "component type", "component", "segment", "maintenance correctable issue", and "countable event", within the Standard.

In this report, comments have been organized by question number. Comments can be viewed in their original format on the following web page:
http://www.nerc.com/filez/standards/Protection_System_Maintenance_Project_2007-17.html

If you feel that your comment has been overlooked, please let us know immediately. Our goal is to give every comment serious consideration in this process! If you feel there has been an error or omission, you can contact the Vice President and Director of Standards, Herbert Schrayshuen, at 609-452-8060 or at herb.schrayshuen@nerc.net. In addition, there is a NERC Reliability Standards Appeals Process.[1]

[1] The appeals process is in the Reliability Standards Development Procedures: http://www.nerc.com/standards/newstandardsprocess.html.

Index to Questions, Comments, and Responses

1. The SDT has made significant changes to the minimum maintenance activities and maximum allowable intervals within Tables 1a, 1b, and 1c, particularly related to station dc supply and dc control circuits. Do you agree with these changes? If not, please provide specific suggestions for improvement. 13

2. The SDT has included VRFs and Time Horizons with this posting. Do you agree with the assignments that have been made? If not, please provide specific suggestions for improvement. 75

3. The SDT has included Measures and Data Retention with this posting. Do you agree with the assignments that have been made? If not, please provide specific suggestions for improvement. 84

4. The SDT has included VSLs with this posting. Do you agree with the assignments that have been made? If not, please provide specific suggestions for change. 100

5. The SDT has revised the "Supplementary Reference" document which is supplied to provide supporting discussion for the Requirements within the standard. Do you agree with the changes? If not, please provide specific suggestions for change. 116

6. The SDT has revised the "Frequently-Asked Questions" (FAQ) document which is supplied to address anticipated questions relative to the standard. Do you agree with these changes? If not, please provide specific suggestions for change. 129

7. If you have any other comments on this Standard that you have not already provided in response to the prior questions, please provide them here. 143

The Industry Segments are:

1 — Transmission Owners
2 — RTOs, ISOs
3 — Load-serving Entities
4 — Transmission-dependent Utilities
5 — Electric Generators
6 — Electricity Brokers, Aggregators, and Marketers
7 — Large Electricity End Users
8 — Small Electricity End Users
9 — Federal, State, Provincial Regulatory or other Government Entities
10 — Regional Reliability Organizations, Regional Entities

		Commenter	Organization	Industry Segment									
				1	2	3	4	5	6	7	8	9	10
1.	Group	Joseph DePoorter	MRO's NERC Standards Review Subcommittee (NSRS)										X

	Additional Member	Additional Organization	Region	Segment Selection
1.	Mahmood Safi	OPPD	MRO	1, 3, 5, 6
2.	Chuck Lawrence	ATC	MRO	1
3.	Tom Webb	WPSC	MRO	3, 4, 5, 6
4.	Jason Marshall	MISO	MRO	2
5.	Jodi Jenson	WAPA	MRO	1, 6
6.	Ken Goldsmith	ALTW	MRO	4
7.	Dave Rudolph	BEPC	MRO	1, 3, 5, 6
8.	Eric Ruskamp	LES	MRO	1, 3, 5, 6
9.	Joseph Knight	GRE	MRO	1, 3, 5, 6
10.	Joe DePoorter	MGE	MRO	3, 4, 5, 6
11.	Scott Nickels	RPU	MRO	4
12.	Terry Harbour	MEC	MRO	6, 1, 3, 5

	Commenter	Organization	Industry Segment									
			1	2	3	4	5	6	7	8	9	10
13.	Carol Gerou	MRO MRO 10										
2. Group	Guy Zito	Northeast Power Coordinating Council										X

	Additional Member	Additional Organization	Region	Segment Selection
1.	Alan Adamson	New York State Reliability Council, LLC	NPCC	10
2.	Gregory Campoli	New York Independent System Operator	NPCC	2
3.	Kurtis Chong	Independent Electricity System Operator	NPCC	2
4.	Sylvain Clermont	Hydro-Quebec TransEnergie	NPCC	1
5.	Chris de Graffenried	Consolidated Edison Co. of New York, Inc.	NPCC	1
6.	Gerry Dunbar	Northeast Power Coordinating Council	NPCC	10
7.	Ben Eng	New York Power Authority	NPCC	4
8.	Brian Evans-Mongeon	Utility Services	NPCC	8
9.	Dean Ellis	Dynegy Generation	NPCC	5
10.	Brian L. Gooder	Ontario Power Generation Incorporated	NPCC	5
11.	Kathleen Goodman	ISO - New England	NPCC	2
12.	David Kiguel	Hydro One Networks Inc.	NPCC	1
13.	Michael R. Lombardi	Northeast Utilities	NPCC	1
14.	Randy MacDonald	New Brunswick System Operator	NPCC	2
15.	Bruce Metruck	New York Power Authority	NPCC	6
16.	Chantel Haswell	FPL Group	NPCC	5
17.	Lee Pedowicz	Northeast Power Coordinating Council	NPCC	10
18.	Robert Pellegrini	The United Illuminating Company	NPCC	1
19.	Saurabh Saksena	National Grid	NPCC	1
20.	Michael Schiavone	National Grid	NPCC	1

	Commenter	Organization	Industry Segment									
			1	2	3	4	5	6	7	8	9	10
21. Peter Yost		Consolidated Edison Co. of New York, Inc. NPCC 3										
22. Si Truc Phan		Hydro-Quebec TransEnergie NPCC 1										
3.	Group	Steve Alexanderson	Pacific Northwest Small Public Power Utility Comment Group		X	X						

	Additional Member	Additional Organization	Region	Segment Selection
1.	Russ Noble	Cowlitz PUD	WECC	3, 4, 5
2.	Dave Proebstel	Clallam County PUD	WECC	3
3.	John Swanson	Benton PUD	WECC	3
4.	Steve Grega	Lewis County PUD	WECC	3, 4

4.	Group	Margaret Ryan	PNGC Power		X					X		

	Additional Member	Additional Organization	Region	Segment Selection
1.		Blachly-Lane Electric Cooperative	WECC	3
2.		Central Electric Cooperative	WECC	3
3.		Clearwater Electric Cooperative	WECC	3
4.		Consumer's Power Company	WECC	3
5.		Coos-Curry Electric Cooperative	WECC	3
6.		Douglas Electric Cooperative	WECC	3
7.		Fall River Electric Cooperative	WECC	3
8.		Lane Electric Cooperative	WECC	3
9.		Lincoln Electric Cooperative	WECC	3
10.		Lost River Electric Cooperative	WECC	3
11.		Northern Lights Electric Cooperative	WECC	3
12.		Okanogan Electric Cooperative	WECC	3
13.		Raft River Electric Cooperative	WECC	3

		Commenter	Organization	Industry Segment									
				1	2	3	4	5	6	7	8	9	10
14.		Salmon River Electric Cooperative	WECC 3										
15.		Umatilla Electric Cooperative	WECC 3										
16.		West Oregon Electric Cooperative	WECC 3										
17.		PNGC	WECC 8										
5.	Group	Dave Davidson	Tennessee Valley Authority	X				X					

	Additional Member	Additional Organization	Region	Segment Selection
1.	Russell Hardison	TOM Support Manager	SERC	
2.	Pat Caldwell	TOM Support	SERC	
3.	David Thompson	GO	SERC	
4.	Jim Miller	GO	SERC	

6.	Group	Denise Koehn	Bonneville Power Administration	X		X		X	X				

	Additional Member	Additional Organization	Region	Segment Selection
1.	Dean Bender	BPA, Tx SPC Technical Svcs	WECC	1
2.	John Kerr	BPA, Tx Technical Operations	WECC	1
3.	Mason Bibles	BPA, Tx Sub Maint and HV Engineering	WECC	1
4.	Laura Demory	BPA, Tx PSC Technical Svcs	WECC	1

7.	Group	Kenneth D. Brown	Public Service Enterprise Group ("PSEG Companies")	X		X		X	X				

	Additional Member	Additional Organization	Region	Segment Selection
1.	Jim Hubertus	PSE&G	RFC	1, 3
2.	Scott Slickers	PSEG Power Connecticut	NPCC	5
3.	Jim Hebson	PSEG ER&T	ERCOT	5, 6
4.	Dave Murray	PSEG Fossil	RFC	5

8.	Group	Sam Ciccone	FirstEnergy	X		X		X	X				

	Commenter	Organization	Industry Segment									
			1	2	3	4	5	6	7	8	9	10
Additional Member	**Additional Organization**	**Region**	**Segment Selection**									
1. Doug Hohlbaugh	FE	RFC	1, 3, 4, 5, 6									
2. Jim Kinney	FE	RFC	1									
3. K. Dresner	FE	RFC	5									
4. B. Duge	FE	RFC	5									
5. J. Chmura	FE	RFC	1									
6. B. Orians	FE	RFC	5									
9. Group	Terry L. Blackwell	Santee Cooper	X									
Additional Member	**Additional Organization**	**Region**	**Segment Selection**									
1. S. Tom Abrams	Santee Cooper	SERC	1									
2. Rene' Free	Santee Cooper	SERC	1									
3. Bridget Coffman	Santee Cooper	SERC	1									
10. Group	Daniel Herring	The Detroit Edison Company			X	X	X					
Additional Member	**Additional Organization**	**Region**	**Segment Selection**									
1. Dave Szulczewski	Relay Engineering	RFC	3, 4, 5									
11. Group	Sasa Maljukan	Hydro One Networks	X									
Additional Member	**Additional Organization**	**Region**	**Segment Selection**									
1. Peter FALTAOUS	Hydro One Networks, Inc.	NPCC	1									
2. David Kiguel	Hydro One Networks, Inc.	NPCC	1									
3. Paul DIFILIPPO	Hydro One Networks, Inc.	NPCC	1									
12. Group	Annette M. Bannon	PPL Supply					X					
Additional Member	**Additional Organization**	**Region**	**Segment Selection**									
1. Mark A. Heimbach	PPL Martins Creek, LLC	RFC	5									
2. Joseph V. Kisela	PPL Lower Mount Bethel Energy, LLC	RFC	5									

	Commenter	Organization	Industry Segment 1	2	3	4	5	6	7	8	9	10
3.		PPL Brunner Island, LLC; RFC; 5										
4.		PPL Montour, LLC; RFC; 5										
5.		PPL Holtwood, LLC; RFC; 5										
6.		PPL Wallingford, LLC; NPCC; 5										
7.		PPL University Park, LLC; RFC; 5										
8.	David L. Gladey	PPL Susquehanna, LLC; RFC; 5										
9.	Thomas E. Lehman	PPL Montana, LLC; WECC; 5										
10.	Lloyd R. Brown	PPL Montana, LLC; WECC; 5										
11.	Augustus J. Wilkins	PPL Montana, LLC; WECC; 5										
13.	Group	Richard Kafka; Pepco Holdings, Inc. - Affiliates	X		X		X	X				
	Additional Member	**Additional Organization**	**Region**	**Segment Selection**								
1.	Alvin Depew	Potomac Electric Power Company	RFC	1								
2.	Carl Kinsley	Delmarva Power & Light	RFC	1								
3.	Rob Wharton	Delmarva Power & Light	RFC	1								
4.	Evan Sage	Potomac Electric Power Company	RFC	1								
5.	Carlton Bradsaw	Delmarva Power & Light	RFC	1								
6.	Jason Parsick	Potomac Electric Power Company	RFC	1								
7.	Walt Blackwell	Potomac Electric Power Company	RFC	1								
8.	John Conlow	Atlantic City Electric	RFC	1								
9.	Randy Coleman	Delmarva Power & Light	RFC	1								
14.	Individual	JT Wood; Southern Company Transmission	X		X							
15.	Individual	Silvia Parada Mitchell; Corporate Compliance	X				X	X				
16.	Individual	Jana Van Ness, Director Regulatory Compliance; Arizona Public Service Company	X		X		X	X				

		Commenter	Organization	Industry Segment									
				1	2	3	4	5	6	7	8	9	10
17.	Individual	Tom Schneider	WECC										X
18.	Individual	Brandy A. Dunn	Western Area Power Administration	X					X				
19.	Individual	Sandra Shaffer	PacifiCorp	X		X		X	X				
20.	Individual	John Canavan	NorthWestern Corporation	X									
21.	Individual	Dan Roethemeyer	Dynegy Inc.					X					
22.	Individual	Robert Ganley	Long Island Power Authority	X									
23.	Individual	Jonathan Appelbaum	The United Illuminating Company	X									
24.	Individual	Lauri Dayton	Grant County PUD	X				X					
25.	Individual	Mark Fletcher	Nebraska Public Power District	X		X		X					
26.	Individual	Brian Evans-Mongeon	Utility Services								X		
27.	Individual	Charles J.Jensen	JEA	X		X		X					
28.	Individual	Fred Shelby	MEAG Power	X		X		X					
29.	Individual	James A. Ziebarth	Y-W Electric Association, Inc.				X						
30.	Individual	Armin Klusman	CenterPoint Energy	X									
31.	Individual	Kasia Mihalchuk	Manitoba Hydro	X		X		X	X				
32.	Individual	Edward Davis	Entergy Services	X		X		X	X				
33.	Individual	James Sharpe	South Carolina Electric and Gas	X		X		X	X				
34.	Individual	Jon Kapitz	Xcel Energy	X		X		X	X				
35.	Individual	Jeff Nelson	Springfield Utility Board			X							
36.	Individual	Amir Hammad	Constellation Power Generation					X					
37.	Individual	Gerry Schmitt	BGE	X									
38.	Individual	Michael R. Lombardi	Northeast Utilities	X		X		X					
39.	Individual	Jeff Kukla	Black Hills Power	X		X		X					

		Commenter	Organization	Industry Segment									
				1	2	3	4	5	6	7	8	9	10
40.	Individual	John Bee	Exelon	X		X		X					
41.	Individual	Andrew Z.Pusztai	American Transmission Company	X									
42.	Individual	Thad Ness	American Electric Power	X		X		X	X				
43.	Individual	Barb Kedrowski	We Energies			X	X	X					
44.	Individual	Jianmei Chai	Consumers Energy Company			X	X	X					
45.	Individual	Art Buanno	ReliabilityFirst Corp.										X
46.	Individual	Tyge Legier	San Diego Gas & Electric	X		X		X					
47.	Individual	Greg Rowland	Duke Energy	X		X		X	X				
48.	Individual	Claudiu Cadar	GDS Associates	X									
49.	Individual	Kirit Shah	Ameren	X		X		X	X				
50.	Individual	Joe Knight	Great River Energy	X		X		X	X				
51.	Individual	Terry Bowman	Progress Energy Carolinas	X		X		X	X				
52.	Group	Joe Spencer - SERC staff and Phil Winston - PCS co-chair	SERC Protection and Control Sub-committee (PCS)										X

	Additional Member	Additional Organization	Region	Segment Selection
1.	Paul Nauert	Ameren Services Co.	SERC	
2.	Bob Warren	Big Rivers Electric Corp.	SERC	
3.	Trevor Foster	Calpine Corp.	SERC	
4.	John (David) Fountain	Duke Energy Carolinas	SERC	
5.	Paul Rupard	East Kentucky Power Coop.	SERC	
6.	Charles Fink	Entergy	SERC	
7.	Marc Tunstall	Fayetteville Public Works Commission	SERC	
8.	John Clark	Georgia Power Co	SERC	

	Commenter	Organization	Industry Segment									
			1	2	3	4	5	6	7	8	9	10
9. Nathan Lovett	Georgia Transmission Corp	SERC										
10. Danny Myers	Louisiana Generation, LLC	SERC										
11. Ernesto Paon	Municipal Electric Authority of GA	SERC										
12. Jay Farrington	PowerSouth Energy Coop.	SERC										
13. Jerry Blackley	Progress Energy Carolinas	SERC										
14. Joe Spencer	SERC Reliability Corp	SERC										
15. Russ Evans	South Carolina Electric and Gas	SERC										
16. Bridget Coffman	South Carolina Public Service Authority	SERC										
17. Phillip Winston	Southern Co. Services Inc.	SERC										
18. George Pitts	Tennessee Valley Authority	SERC										
19. Rick Purdy	Virginia Electric and Power Co.	SERC										
53. Group	Frank Gaffney	Florida Municipal Power Agency	X		X	X	X					

	Additional Member	Additional Organization	Region	Segment Selection
1.	Timothy Beyrle	Utilities Commission of New Smyrna Beach	FRCC	4
2.	Greg Woessner	Kissimmee Utility Authority	FRCC	1
3.	Jim Howard	Lakeland Electric	FRCC	1
4.	Lynne Mila	City of Clewiston	FRCC	3
5.	Joe Stonecipher	Beaches Energy Services	FRCC	1
6.	Cairo Vanegas	Fort Pierce Utility Authority	FRCC	4

54. Group	Mallory Huggins	NERC Staff										

	Additional Member	Additional Organization	Region	Segment Selection
1.	Joel deJesus	NERC	NA - Not Applicable	NA
2.	Mike DeLaura	NERC	NA - Not Applicable	NA
3.	Bob Cummings	NERC	NA - Not Applicable	NA

		Commenter	Organization	Industry Segment									
				1	2	3	4	5	6	7	8	9	10
4.	David Taylor	NERC	NA - Not Applicable NA										
5.	Al McMeekin	NERC	NA - Not Applicable NA										
6.	Earl Shockley	NERC	NA - Not Applicable NA										
55.	Individual	Terry Harbour	MidAmerican Energy Company	X									
56.	Individual	Scott Berry	Indiana Municipal Power Agency				X						
57.	Individual	Rex Roehl	Indeck Energy Services					X					
58.	Individual	Martin Bauer	US Bureau of Reclamation					X					

1. **The SDT has made significant changes to the minimum maintenance activities and maximum allowable intervals within Tables 1a, 1b, and 1c, particularly related to station dc supply and dc control circuits. Do you agree with these changes? If not, please provide specific suggestions for improvement.**

Summary Consideration: Commenters expressed concerns with virtually all elements of posted Tables 1a, 1b, and 1c. In response to these comments, the Tables have been completely rearranged and extensively revised. The Tables now consist of one table for each of the five Protection System component types, as well as a sixth table to address monitoring and alarming requirements to support extended intervals for monitored Protection System components.

Several entities proposed extending the 3 month interval for unmonitored communication systems, and the drafting team did not adopt this suggestion because the SDT believes that three-months is necessary for these inspection-related activities related to communications systems

Organization	Yes or No	Question 1 Comment
Santee Cooper		No comment.
Xcel Energy		1. The current language is not aligned with the FAQ concerning the level of maintenance required for Dc Systems, in particular the FAQ states that with only 1 element of the Table 1b attributes in place the DC Supply can be maintained using the Table 1b activities, the table itself is clear that ALL of the elements must be present to classify the DC Supply as applicable to Table 1b. The FAQ needs to be aligned with the tables. 2. The FAQ also contains a duplicate decision tree chart for DC Supply. The FAQ contains a note on the Decision tree that reads, "Note: Physical inspection of the battery is required regardless of level of monitoring used", this statement should be placed on the table itself, and should include the word quarterly to define the inspection period.

Organization	Yes or No	Question 1 Comment
Response: Thank you for your comments. 1. The Tables have been rearranged and considerably revised to improve clarity. The FAQ has been modified. **2.** The FAQ has been modified.		
Pepco Holdings, Inc. - Affiliates		1. There were numerous comments submitted for Draft 1 indicating that the 3 month interval for verifying unmonitored communication systems was much too short. The SDT declined to change the interval and in their response stated: The 3 month intervals are for unmonitored equipment and are based on experience of the relaying industry represented by the SDT, the SPCTF and review of IEEE PSRC work. Relay communications using power line carrier or leased audio tone circuits are prone to channel failures and are proven to be less reliable than protective relays. Statistics on the causes of BES protective system misoperations, however, do not support this assertion. The PJM Relay Subcommittee has been tracking 230kV and above protective system misoperations on the PJM system for many years. For the six year period from 2002 to 2007, the number of protective system misoperations due to communication system problems were lower (and in many cases significantly lower) than those caused by defective relays, in every year but one. Similarly, RFC has conducted an analysis of BES protection system misoperations for 2008 and 2009, and found the number of misoperations caused by communication system problems to be in line with the number attributed to relay related problems. If unmonitored protective relays have a 6 year maximum maintenance/inspection interval, it does not seem reasonable to require the associated communication system to be inspected 24 times more frequently, particularly when relay failures are statistically more likely to cause protective system misoperations. As such, a 12 or 18 calendar month interval for inspection of unmonitored communication systems would seem to be more appropriate. FAQ II 6 B states that the concept should be that the entity verify that the communication equipment...is operable through a cursory inspection and site visit. However, unlike FSK schemes where channel integrity can easily be verified by the

Organization	Yes or No	Question 1 Comment
		presence of a guard signal, ON-OFF carrier schemes would require a check-back or loop-back test be initiated to verify channel integrity. If the carrier set was not equipped with this feature, verification would require personnel to be dispatched to each terminal to perform these manual checks. 2. The phrase "Verify Battery cell-to-cell connection resistance" has entered the table where it did not exist before. On some types of stationary battery units, this internal connection is inaccessible. On other types the connections are accessible, but there is no way to repair them based on a bad reading. And bad cell-to-cell connections within units will be detected by the other required tests. This requirement will cause entities to scrap perfectly good batteries just so this test can be performed, with no corresponding increase in bulk electric system reliability while taking an unnecessary risk to personnel and the environment.
Response: Thank you for your comments. 1. The SDT believes that the 3-month interval is proper for unmonitored communications systems. **2.** This element of the table has been modified to state, "Battery internal cell-to-cell or unit-to-unit connection resistance (where available to measure)" to address this comment.		
Indeck Energy Services	No	
GDS Associates	No	Table 1a. Protective relays 1. For microprocessor relays need guidance in how all the inputs/outputs will be checked and how is determined which one are "essential to proper functioning of the Protection System" 2. For microprocessor relays need guidance in how the acceptable measurement is physically determined.

Organization	Yes or No	Question 1 Comment
Response: Thank you for comments. 1. The Standard is proscribed from describing "how." Section 15.3 of the Supplementary Reference provides some guidance, but it is left to the entity to determine what methods best address their program. **2.** The Standard is proscribed from describing "how." Section 15.3 of the Supplementary Reference provides some guidance, but it is left to the entity to determine what methods best address their program.		
Western Area Power Administration	No	1) Standard, Table 1a, "Control and trip circuits with electromechanical trip or aux contacts (except for microprocessor relays, UFLS or UVLS)": Where would un-monitored control and trip circuits connected to a microprocessor relay fall, and what is the associated interval and maintenance activity? 2) Standard, Table 1a, "Control and trip circuits with electromechanical trip or aux contacts (except for microprocessor relays, UFLS or UVLS)": Please confirm that the defined Maintenance Activity requires actual tripping of circuit breakers or interrupting devices. 3) Standard, Table 1a, "Control and trip circuits with unmonitored solid state trip or auxiliary contacts (except UFLS or UVLS)": Please confirm that the defined Maintenance Activity requires actual tripping of circuit breakers or interrupting devices. 4) Standard, Table 1b. On page 13, for Protective Relays, please clarify the intent of "Conversion of samples to numeric values for measurement calculations by microprocessor electronics that are also performing self diagnosis and alarming." 5) Standard, Table 1b. On page 13, for Protective Relays, please clarify the intent of "Verify correct operation of output actions that used for tripping." Does this require functional testing of a microprocessor relay, i.e., using a relay test set to simulate a fault condition? 6) Standard, Tables 1a and 1b: Would it be possible to provide an interval credit for full parallel redundancy from relay to trip coil? 7) Table 1a (page 9) Voltage and Current Sensing Inputs to Protective Relays and

Organization	Yes or No	Question 1 Comment
		associated circuitry – This maintenance activity statement implies that signal tests to prove the voltage and current are present is all that is required. Can this be accomplished by adding a step to the Relay Maintenance Job Plan to take a snapshot of the currents and potentials (In-Service Read) with piece of test equipment? 8) Table 1b (Page 14) Control and Trip Circuitry - Level 2 Monitoring Attributes for Component is too wordy and hard to understand the meaning. Does this whole paragraph mean that the dc circuits need to be monitored and alarmed? At what level does the dc control circuits need the alarming? Can this be at the control panel dc breaker output? 9) Table 1b (Page 15) Station Dc Supply - Should this be in Table 1c because the attributes indicate that the station dc supply cells and electrolyte levels are monitored remotely. To do a fully monitored battery system would be cost prohibitive and require a tremendous amount of engineering. 10) Voltage and Current Sensing Inputs to Protective Relays and associated circuitry - This maintenance activity statement implies that signal tests to prove the voltage and current are present is all that is required. Can this be accomplished by adding a step to the Relay Maintenance Job Plan to take a snapshot of the currents and potentials (In-Service Read) with piece of test equipment? 11) Table 1a and 1b (Page 11 and 16) Associated communications system - Western has monitoring capability on all Microwave Radio and Fiber Optics communications systems with the Communications Alarm System that monitors and annunciates trouble with all communications equipment in the communications network. The protective relays that use a communications channel on these systems have alarm capability to the remote terminal units in the substation. Since these are digital channels how does an entity prove channel performance on a digital system?
Response: Thank you for your comments. 1. The Tables have been rearranged and considerably revised to improve clarity. Please see the new Table 1-5.		

Organization	Yes or No	Question 1 Comment
2. The Standard requires that breakers (except for those for UFLS/UVLS) be tripped at least once during each 6 calendar year interval. See new Table 1-5. 3. The Standard requires that breakers (except for those for UFLS/UVLS) be tripped at least once during each 6 calendar year interval. See new Table 1-5. 4. The Tables have been rearranged and considerably revised to improve clarity. Please see new Table 1-1. 5. The Tables have been rearranged and considerably revised to improve clarity. Please see new Table 1-1. 6. No. The SDT believes that it is important that all parallel paths be maintained within the indicated interval, and the prescribed interval already considers the reliability benefits of parallel tripping paths. 7. The Tables have been rearranged and considerably revised to improve clarity. Please see new Table 1-3. It may be possible to do as suggested in some cases; a snapshot may be able to determine that voltage and current is present at the relay. However, the snapshot may not be sufficient to determine that the values are acceptable. 8. The Tables have been rearranged and considerably revised to improve clarity. Please see new Table 1-5. 9. The Tables have been rearranged and considerably revised to improve clarity. Please see new Table 1-4. 10. The Tables have been rearranged and considerably revised to improve clarity. Please see new Table 1-3. It may be possible to do as suggested in some cases; a snapshot may be able to determine that voltage and current is present at the relay. However, the snapshot may not be sufficient to determine that the values are acceptable. **11.** Many digital communications systems or digital relays themselves use bit-error-rate or other methods to monitor and alarm on channel performance – check the design of the equipment used.		
Southern Company Transmission	No	1) Comment on Control Circuitry - Below in Figure 1 is a previous version of Table 1. It clearly shows 3 levels of monitoring for Control Circuitry. For Unmonitored schemes such as EM, SS, unmonitored MP relays, you must do a complete functional trip test every 6 years. For partially monitored schemes such as MP relays with continuous trip coil/circuit monitoring, you must do a complete functional trip test every 12 years. For fully monitored schemes where all trip paths are monitored, you do not have to trip test the scheme but you still have to operate the breaker trip coils, EM aux/lockout relays every 6

Organization	Yes or No	Question 1 Comment
		years. This is very clear and reasonable. The latest version of Table 1 is not very clear or reasonable. The previous Partially Monitored control circuit monitoring requirements were deleted and the Fully Monitored control circuit monitoring requirements were moved to Partially Monitored requirements. We are not sure why this major change in philosophy was made?? This makes all of our MP relay control schemes that continuously monitor trip coils/circuits fall into the unmonitored category and therefore requires a 6 year full functional trip test. For a scheme that monitors 99+% of the control scheme (and probably 100% of the control scheme that actually has problems) to be considered Unmonitored does not seem logical or reasonable to us. This puts these "highly monitored" schemes in the same category and requires the same maintenance requirements / intervals as EM relays with no alarms whatsoever. This also seems to contradict the intent of the following statement from the Supplementary Reference doc on page 9: Level 2 Monitoring (Partially Monitored) Table 1b This table applies to microprocessor relays and other associated Protection System components whose self-monitoring alarms are transmitted to a location (at least daily) where action can be taken for alarmed failures. The attributes of the monitoring system must meet the requirements specified in the header of the Table 1b. Given these advanced monitoring capabilities, it is known that there are specific and routine testing functions occurring within the device. Because of this ongoing monitoring hands-on action is required less often because routine testing is automated. However, there is now an additional task that must be accomplished during the hands-on process - the monitoring and alarming functions must be shown to work. Recommendation - Please consider going back to the previous table as shown below in Figure 1. It seems much clearer and reasonable. Feel free to convert the old wording to the latest wording. Figure 1 - Previous Table - Control Circuitry See Figure 1 in email documentation sent to Al McMeekin. Current Table - Control Circuitry (see pdf file) See pdf file PRC-005-2_clean_20 10June88131418.pdf in email documentation sent to Al McMeekin. 2) Comments: The comments below are grouped by component type. The following (5) comments pertain to the maintenance intervals for protective relays:

Organization	Yes or No	Question 1 Comment
		a. Is the "verify acceptable measurement of power system input values" activity listed in the protective relay 6 year interval in Table 1a the same activity as the 12-year activity for Voltage and Current Sensing Inputs in the same table? b. Please clarify the meaning of "check the relay inputs and outputs" that are specified to be checked for microprocessor relays at the following table locations: the protective relay 6 year interval in Table 1a, the protective relay 12-year interval in Table 1b. Is this referring to a check of the relay internal input recognition and output control ending at the relay case terminals, or is this referring to a check extending to the source (and target) of all inputs and outputs to the relay? The latter interpretation results in a repeat of the maintenance required for dc control circuitry. c. Are the second, third, and fourth maintenance activities in the Table 1a Protective Relay, 6-year row those activities that apply to microprocessor relays? If so, we suggest rewording these items as follows: For microprocessor relays, verify that the settings are as specified, check the relay digital inputs and outputs that are essential to proper functioning of the Protection System, and verify acceptable measurement of power system analog input values." d. Please clarify the meaning of "Verify proper functioning of the relay trip contacts" found in protective relays with trip contacts 12 year interval in Table 1c. Is this verification a check of the relay internal contact to the relay case terminals or is this meant to be a trip check functional test? This category of component does not appear in table 1a or 1b. Should it? Is this activity the same as the protective relay Table 1b maintenance activity "output actions used for tripping"? If so, please make the wording match exactly to clarify. e. Table 1c introduces the use of "Continuous" Maximum Maintenance Intervals. This is inconsistent with the Table 1a and Table 1b usage of the interval. In Tables 1a and 1b this interval is used to describe the maximum time frame within which the activities shown in "Maintenance Activities" must be completed. The table column "Maintenance Activities" has been used to identify those activities which must be performed in addition

Organization	Yes or No	Question 1 Comment
		to those accomplished by the monitoring attributes. To maintain consistency in use of the interval and activity columns of Tables 1a, 1b, and 1c, each entry that uses the "Continuous" interval should be changed to N/A and the Maintenance Activities should be changed to either "No additional activities required" or "None, due to continuous automatic verification of the status of the relays and alarming on change of settings" [example given for Table 1c, Protective Relays] 3) The following (8) comments apply to Maintenance Tables 1a, 1b, and 1c for Station DC supplies. a. In Table 1a, Station dc supply, 18 calendar month, the verify item "Float voltage of battery charger" is not listed in Table 1b. Is this requirement independent of the level of monitoring and always required? If so, should it be added in to Table 1b and 1c, Station dc supply, 18 calendar months above the "Inspect:" section? b. The 6 year interval maintenance activity for NiCad batteries in Table 1a and Table 1b should read "station battery" rather than "substation battery". c. It is recommended to simplify the Station dc supply sections in each of the three maintenance tables by relocating the common items that do not change dependent upon the level of monitoring. Specifically, the following rows of each of the three tables have identical maintenance requirements that are independent of the level of monitoring. The tables would be significantly simplified if these "monitor level independent" requirements are moved outside of the table: I. Station dc supply; 18 calendar months; Inspect: " II. Station dc supply (that has a s a component Valve Regulated Lead Acid batteries) III. Station dc supply (that has as a component Vented Lead Acid batteries) IV. Station dc supply (that has as a component Nickel Cadmium batteries) V. Station dc supply (battery is not used)

Organization	Yes or No	Question 1 Comment
		d. Table 1a has 18 calendar month requirements for "Station dc supply (battery is not used)". This category is missing from Table 1b - was this intentional? e. Table 1a has 6 calendar year and 18 calendar month requirements for "Station dc supply (battery is not used)". This category is missing from Table 1c - was this intentional? f. Please clarify the meaning of "Battery terminal connection resistance". Does this apply only to multi-terminal batteries? Is this referring to the cables external to the battery (to the charger and load panel)? g. Table 1c contains a Type of Protection System Component not found in any of the other tables: "Station dc supply (any battery technology). Is this the same as "Station dc supply" found in Tables 1a and 1b? h. The Level 3 Monitoring Attributes for "Station dc supply (any battery technology)" are identical to the Level 2 Monitoring Attributes for "Station dc supply". This appears to be duplicative in description with two different "maximum maintenance intervals" and "maintenance activities" listed. 4) The following (3) comments pertain to the Voltage and Current Sensing Input component type: a. Why is "signals" bolded in the Table 1a row for this component type? b. Are the Table 1a, 12 year maintenance activities for this component type a duplication of the Table 1a, Protective relay, 6 year maintenance activity for microprocessor relays (verify acceptable measurement of power system input values)? c. Why is this component type highlighted in bold in Table 1c? 5) The following (8) comments pertain to the Control and Trip Circuit component type: a. Why are microprocessor relay initiated tripping schemes excluded from the 6 year

Organization	Yes or No	Question 1 Comment
		complete functional testing? The auxiliary relay operations resulting from these initiating devices are just as likely to stick (mis-operate) as those initiated from electromechanical devices. b. We propose simplifying Table 1a for this component type by grouping the two 6 year and the two 12 year interval maintenance lines into two rather than four table rows. The 6 year interval maintenance activities for the UFLS/UVLS systems could be addressed in the table row above using a parenthetical adder to the existing text = (for UFLS/UVLS systems, the verification does not require actual tripping of circuit breakers or interrupting devices). All of the other text in the UFLS/UVLS table row matches that found two rows above. The same parenthetical adder in the first 12 year interval row for this component type would eliminate the need for the (UFLS/UVLS Systems Only) row for 12 year intervals. c. If the two rows are combined as suggested previously - this comment is irrelevant: The Table 1a 6 year interval activity for UFLS/UVLS Systems Only is missing the word "contacts" after auxiliary. d. There appears to be no difference in the 6 year interval maintenance activities for this component type in Table 1a and Table 1b. Table 1b monitoring attributes include "Monitoring and alarming of continuity of trip circuits", but the interval between electrically operating each breaker trip coil, auxiliary relay, and lockout relay remains at 6 years. What maintenance activity advantage do the Level 1b monitoring attributes provide? e. The difference between the two DC Control Circuits in Table 1b (on page 14) is unclear. What is the difference between the "Control Circuitry (Trip Circuits)" and the "Control and trip circuitry"? We propose combing the multiple table rows for this component type into a single line item for this component type, as it takes a combination of the protective relay action, any auxiliary relay, and the circuit breaker to comprise a complete tripping system. f. We have three questions on the monitoring attributes given for this component type on

Organization	Yes or No	Question 1 Comment
		page 14: I. Does the attribute beginning “Monitoring of Protection ...” indicate a requirement to monitor every input, every output, and every connection of every Protection System Component involved in each tripping scheme? II. Does the attribute beginning “Connection paths...” related to monitoring of communication paths? III. Does the attribute beginning “Monitoring of the continuity...” require the presence of coil monitoring of any auxiliary relay whose contact is encountered when tracing a tripping path from a protective relay to a breaker? g. Are the Table 1c attributes for this component type different from the monitoring described in Table 1b beginning “Connection paths...”? h. Are there no requirements to operate any relays functionally for “Protection System control and trip circuitry” in Table 1c? The devices need to be exercised some or they will not be reliable. 6) The following (1) comment pertains to the Associated communications system component type: The Table 1b monitoring attribute for this component type (communications channel monitor and alarm) clearly should (and does) eliminate the Table 1a, 3 month interval activity (verifying the communication system is functional). The common maintenance activities found in Table 1a (6 year) and Table 1b (12 year) should be same interval - either 6 or 12.
Response: Thank you for your comments. 1. The Tables have been rearranged and considerably revised to improve clarity. Please see new Table 1-5. 2. The Tables have been rearranged and considerably revised to improve clarity. Please see new Table 1-1 for all five of these		

Organization	Yes or No	Question 1 Comment
comments. 3. The Tables have been rearranged and considerably revised to improve clarity. Please see new Table 1-4 for all eight of these comments. 3f. Please see IEEE 450-2002 Appendix F, IEEE 1188-2005 Appendix D, and Section 6.3.2 of IEEE 1106-2005 for clarification of the meaning of "battery terminal connection resistance". 4. The Tables have been rearranged and considerably revised to improve clarity. Please see new Table 1-3 for all three of these comments. 5. The Tables have been rearranged and considerably revised to improve clarity. Please see new Table 1-5 for all eight of these comments. 6. The Tables have been rearranged and considerably revised to improve clarity. Please see new Table 1-2 for this comment.		
Consumers Energy Company	No	1. If multiple redundant Protection System components, with associated parallel tripping paths, are provided, Table 1a, 1b, and 1c require that each parallel path be maintained, and that the maintenance be documented. Often, these multiple schemes are provided not to meet specific reliability-related requirements, but instead to provide operating flexibility. Testing these likely will require outages, and those outages may result in decreased reliability. Further, the documentation related to maintenance of all paths will be very cumbersome, and will lead to increased compliance exposure simply by its volume. This may perversely lead to entities NOT installing the redundant schemes, resulting in decreased reliability. 2. Many of the activities described in the Tables are not, by themselves, clear. The standard should include sufficient detail such that entities are clear as to what must be done for compliance, rather that relying on supplementary documents for this information. For example, it's not clear, in Table 1a (Station DC Supply), what is meant by, "Verify that the dc supply can perform as designed when the ac power from the grid is not present." Similarly, it isn't clear from the general description within the Tables that components possessing different monitoring attributes within a single scheme, may be distinguished

Organization	Yes or No	Question 1 Comment
		such that differing relevant tables can be used for the separate components. 3. In Table 1a, Station DC Supply, one of two optional activities is to "Verify that the station battery can perform as designed by evaluating the measured cell/unit internal ohmic values to station battery baseline. Battery assemblies supplied by some manufacturers have the connections made internally, making this option unavailable. Experience with ASME standards show that NERC and SDT members may be jointly and separately liable for litigation by specifying methods that either prefer or prohibit use of certain technologies. 4. Two of the four Maintenance Activities that begin with "Perform a complete functional trip ..." conclude with "... does not require actual tripping of circuit breakers or other interrupting devices. Do the other two such activities therefore require tripping of circuit breakers or other interrupting devices? 5. Performance of the minimum activities specified within Table 1a for legacy systems, particularly regarding control circuits, will require considerable disconnection and reconnection of portions of the circuits. Such activities will likely cause far more problems on restoration-to-service than they will locate and correct. We suggest that the SDT reconsider these activities with regard for this concern.

Response: Thank you for your comments.

1. The SDT believes that it is important that all parallel paths be maintained within the indicated interval, and the prescribed interval already considers the reliability benefits of parallel tripping paths.
2. The Tables have been rearranged and considerably revised to improve clarity. Please see new Table 1-5.
3. The use of the term "cell/unit" acknowledges that individual cells may not be accessible, but that assemblies of several cells (into units) may be available instead, and may be used to address this Requirement. An acceptable base-line value and follow-on tests may be acceptable for the entire station battery as a single unit.
4. The Tables have been rearranged and considerably revised to improve clarity. Please see new Table 1-5.

Organization	Yes or No	Question 1 Comment
5. The Tables have been rearranged and considerably revised to improve clarity. Please see new Table 1-5. To the degree that performance history for the components within these systems is available, a performance-based program per Requirement R3 and Attachment A may be useful in these cases.		
JEA	No	1. R1.1 What is a Protection System component? Could the SDT provide a better understanding of what is meant by component? 2. R4: A "Failure to specify whether a component is being addressed by time-based, condition-based, or performance-based maintenance" by itself is a documentation issue and not an equipment maintenance issue. Suggest this warrants only a lower VSL, especially when one of the required components can only be time based. 3. R4: Suggest a stepped VSL for "Entity has failed to initiate resolution of maintenance-correctable issues". While we understand the importance of addressing a correctable issue, it seems like there should be some allowance for an isolated unintentional failure to address a correctable issue.
Response: Thank you for your comments. 1. A definition of "Component" has been added to the draft Standard. The SDT's intent is that this definition will be used only in PRC-005-2, and thus will remain with the Standard when approved, rather than being relocated to the Glossary of Terms. 2. This comment appears to be related to the VSL for Requirement R1, not Requirement R4 as indicated. The SDT disagrees that this is a "documentation" issue, and believes that that the related Requirement is fundamental to establishing an effective PSMP per this Standard. Also, this VSL is graded such that missing up to 5% of the required activity is indeed a Lower VSL. **3.** The VSL for Requirement R4 has been modified as suggested.		
Entergy Services	No	1. Table 1a has a "Control and trip circuits with electromechanical trip or auxiliary contacts (except for microprocessor relays, UFLS or UVLS)" component type listed, and there is a "Control and trip circuits with electromechanical trip or auxiliary [editorial comment: add 'contacts'] (UFLS/UVLS systems only)" component type listed. Suggest a "Control and trip circuits with electromechanical trip or auxiliary contacts" for a microprocessor relay

Organization	Yes or No	Question 1 Comment
		application should be addressed since it seems to be missing. 2. The term “check” has replaced “verify” for some of the maintenance activities in this draft version. What is the difference between these two terms, and shouldn’t “check” be defined if it is to be included as a PSMP activity term? 3. Assuming the term “check” replaced “verify proper functioning” in order to allow for the completion of a maintenance activity within the required interval and yet account for a maintenance correctable issue being present, suggest the other remaining activities in the tables where the term “verify proper functioning” is used, also be replaced with “check”. 4. Consider modifying the definition of “verification” to “A means of determining or checking that the component is functioning properly or maintenance correctable issues are identified”, eliminate use of the term “verify proper functioning” (which seems to be redundant by PRC-005-2 standard definition), and simply use the term “verify”.
Response: Thank you for your comments. 1. The Tables have been rearranged and considerably revised to improve clarity. Please see new Table 1-5. 2. “Check” is not an element of the PSMP definition. This term has been replaced throughout the tables with whatever term of the definition is relevant. 3. “Check” is not an element of the PSMP definition. This term has been replaced throughout the tables with whatever term of the definition is relevant. **4.** The terms within the PSMP definition have been revised to reflect the action (“verify” rather than “verification,” for example). The SDT believes that the use of the term “verify” within the modified tables and the definition of this component in the PSMP definition is appropriate and correct.		
MEAG Power	No	1. The descriptions for the "type of protection system components" do not appear to be consistent between Tables, 1a, 1b and 1c.

Organization	Yes or No	Question 1 Comment
		2. The maximum maintenance interval for a lead-acid vented battery is listed at 6 calendar years for performing a capacity test. This type of test has been proven to reduce battery life and an interval of 10 to 12 years would be better. 3. The maximum maintenance interval for "Station DC supply" was set at 3 months. This is too short of a period and 6 months would be better. 4. The control and trip circuits associated with UVLS and UFLS do not require tripping of the breakers but all other protection systems require tripping of the breakers, this appears to be inconsistent? 5. Digital relays have electromagnetic output relays. Do they fall into the electromechanical trip or solid state trip? 6. Need for clarification: The standard indicates that only voltage and current signals need to be verified. Does this mean that voltage and current transformers do not need to be tested by applying a primary signal and verifying the secondary output?

Response: Thank you for your comment.

1. The Tables have been rearranged and considerably revised to improve clarity and consistency. Please see new Table 1-5.
2. The SDT disagrees, and believes that a capacity test at 6-year levels is appropiate. A properly maintained battery, according to various credible references (from IEEE, EEI, EPRI, various manufacturers, etc.), can easily handle multiple deep discharges over its expected life.
3. The activity related to this interval is to verify various basic operating parameters. The SDT believes that extension of verification of these parameters beyond the interval within the Standard is inappropriate.
4. This is an intentional difference between UFLS/UVLS and the remainder of the Protection Systems addressed within the Standard, because of the distributed nature of UFLS/UVLS and because these devices are usually tripping distribution system elements.
5. These devices fall under “electromechanical output contacts.” The Tables have been rearranged and considerably revised to improve clarity. Please see new Table 1-1.

Organization	Yes or No	Question 1 Comment
6. The Tables have been rearranged and considerably revised to improve clarity. Please see new Table 1-3.		
Ameren	No	Ameren does agree that draft 2 is a considerable improvement from draft 1 of PRC-005-2; however the following still need to be addressed. 1) Use "Control circuitry" to be consistent with the proposed definition. If 'and trip' was included so that users would know this is a trip circuit, then the definition should use 'Trip circuitry' instead of 'Control circuitry'. It is important to use consistent terminology throughout the definition and the standard. 2) Please add row numbers in each of Tables 1a, 1b, and 1c, and arrange so that row 1 in each table corresponds, etc. (or state which rows correspond to each other.) This would help clarify movement from table to table. The number of sub clauses, nuances, and varied Type of Component descriptors among rows in the same table as well as from table-to-table can be overwhelming. This would help keep Regional Entities and System Owners from making errors. 3) Please clarify that the instrument transformer itself is excluded. The standard indicates that only voltage and current signals need to be verified. The FAQ seems to cover this, but see our comments on your question 6. 4) Clarifications need to be made on testing requirements on trip contacts relative to microprocessor vs. EM relays. Digital relays have electromagnetic output relays. Do they fall into the electromechanical trip or solid state trip? 5) There appears to be an inconsistency in the use of "check" vs. "verify" in the tables. Consider modifying the definition of "verification" to "A means of determining or checking that the component is functioning properly or that the maintenance correctable issues are identified", eliminate use of the term "verify proper functioning" (which seems to be redundant by PRC-005-2 standard definition), and simply use the term "verify". 6) Alternately if the term "check" replaced "verify proper functioning" in order to allow for the completion of a maintenance activity within the required interval and yet account for an

Organization	Yes or No	Question 1 Comment
		outstanding maintenance correctable issue being present, suggest the other remaining activities in the tables where the term “verify proper functioning” is used, also be replaced with “check”. 7) If there is an intentional difference between “verify” and “check”, shouldn’t “check” be defined if it is to be included as a PSMP activity term? 8) Functional trip testing will require extensive analysis and could involve an extensive testing evolution to ensure the correct circuit is tested without unexpected trip of other components, particularly for generator protection systems and some transmission configurations. The complexity of the system and the test would be conducive to an error that resulted in excessive tripping, thus affecting the reliability of the BES. It would seem that the potential for an adverse affect from this test would be greater than the benefit gained of testing the circuit. In addition, scheduling outages to perform the functional trip testing in conjunction with other outages required to perform maintenance and other construction activities will be difficult due to the large number of outage requirements for the functional testing. This will challenge the BES more often and thus reduce reliability. For these reasons functional trip testing is too frequent, and should be extended to twelve years. 9) In battery maintenance table, we suggest that “cell/unit” be changed to “cell or unit.” Suggest substituting “unit-to-unit” wherever “cell-to-cell” is used in the table now. Many batteries are packaged such that the individual cells are not accessible. 10) IEEE battery maintenance standards call for quarterly inspections. These are targets, though, not maximums. An entity wishing to avoid non-compliance for an interval that might extend past three calendar months due to storms and outages must set a target interval of two months thereby increasing the number of inspections each year by half again. This is unnecessarily frequent. We suggest changing the maximum interval for battery inspections to 4 calendar months. For consistency, we also suggest that all intervals expressed as 3 calendar months be changed to 4 calendar months. 11) Replace “State of charge of the individual battery cells/units” with “Voltage of the

Organization	Yes or No	Question 1 Comment
		individual battery cells or units". 12) The maximum maintenance interval for a lead-acid vented battery is listed at 6 calendar years for performing a capacity test. This type of test has been proven to reduce battery life and an interval of 10 to 12 years would be better. 13) The level 2 table regarding Protection Station dc supply states that level 1 maintenance activities are to be used, but then goes on to give a list of Maintenance Activities that don't match those in level 1. Which activities shall we use? Same situation for Station DC Supply (battery is not used) where the 18 month interval is missing. 14) Also, Table 1B, in the second to last row, should be referring to UFLS rather than SPS.

Response: Thank you for your comments.

1. The Tables have been rearranged and considerably revised to improve clarity and consistency. Please see new Table 1-5.
2. The Tables have been rearranged and considerably revised to improve clarity and consistency. Please see new Table 1-5.
3. The definition has been modified to clarify that instrument transformers ARE part of the Protection System, and the maintenance activities in the new Table 1-3 specify WHAT must be done regarding this component type. The FAQ (II.3.A) is correct on this subject.
4. The Tables have been rearranged and considerably revised to improve clarity. These devices fall under "electromechanical output contacts." The Tables have been rearranged and considerably revised to improve clarity. Please see new Table 1-1.
5. "Check" is not an element of the PSMP definition. This term has been replaced throughout the Tables with whatever term of the definition is relevant. The Tables have been rearranged and considerably revised to improve clarity. Please see new Table 1-5.
6. "Check" is not an element of the PSMP definition. This term has been replaced throughout the Tables with whatever term of the definition is relevant. The Tables have been rearranged and considerably revised to improve clarity. Please see new Table 1-5.
7. "Check" is not an element of the PSMP definition. This term has been replaced throughout the Tables with whatever term of the definition is relevant.
8. The Tables have been rearranged and considerably revised to improve clarity. Please see new Table 1-5.

Organization	Yes or No	Question 1 Comment
9. The Tables have been rearranged and considerably revised to improve clarity. Please see new Table 1-4. This element of the table has been modified to state, "Battery internal cell-to-cell or unit-to-unit connection resistance (where available to measure)" to address this comment. 10. The Tables have been rearranged and considerably revised to improve clarity. Please see new Table 1-4. The Requirement remains as "3 Calendar Months" and the SDT is not prescribing or suggesting what measures an entity may take within their program to assure compliance. 11. The Tables have been rearranged and considerably revised to improve clarity. Please see new Table 1-4. Verification of voltage of individual cells, etc., is one method; there are other ways. 12. The SDT disagrees, and believes that a capacity test at 6-year intervals is appropiate for Vented Lead Acid and Ni-Cad batteries. A properly maintained battery, according to various credible references (from IEEE, EEI, EPRI, various manufacturers, etc.), can easily handle multiple deep discharges over its expected life. 13. The Tables have been rearranged and considerably revised to improve clarity. Please see new Table 1-4. **14.** The Tables have been rearranged and considerably revised to improve clarity. Please see new Tables 1-5.		
American Transmission Company	No	ATC feels additional changes are needed. 1. The functional testing requirement should be altered or removed as it increases the amount of hands-on involvement and the opportunity for human error related outages to occur, thereby introducing more opportunities to decrease system reliability. As noted on p. 8 in the supplementary reference document, "Experience has shown that keeping human hands away from equipment known to be working correctly enhances reliability." By removing circuits from service on the proposed timelines for functional testing, the chance for human error is greater than a mis-operation from faulty wiring. Alternatively, entities may choose to schedule more planned outages to conduct their functional testing in order to limit the risk of unplanned outages resulting from human error. Under this scenario, more elements will be scheduled out of service on a regular basis, thereby reducing transmission system availability and weakening the system making it more challenging to withstand each subsequent contingency (N-1). Thus testing an in-tact

Organization	Yes or No	Question 1 Comment
		system is more desirable than taking it out of service for testing. 2. While the SDT has included language in the draft standard to use fault analysis to complete maintenance obligations, in practicality, this option does not offer any relief to taking outages to perform functional tests. Nearly all BES circuit breakers are equipped with dual trip coils. Identifying which trip coil operated for a fault only covers the one trip coil. Functional tests would still be needed on the other. The likelihood of having multiple trips on a given line in the course of several years is very low. Given it can take a year to schedule some outages, planning maintenance with random faults is unpractical and will create unacceptable risk to compliance violations. A better approach is to use the basis in schedule A, but extend this to cover the entire protection schemes. The document should establish target goals for mis-operation rates (dependability and security). This would allow the utilities to develop cost effective programs to increase reliability. The utilities would have incentives to replace poorly performing communications systems; they would be able to quantify the value of upgrading relay systems.
Response: Thank you for your comments. 1. The Tables have been rearranged and considerably revised to improve clarity. Please see new Table 1-5. **2.** Operational results, if desired by an entity, MAY be used to meet maintenance requirements to the degree that they verify, etc., the relevant performance. Whether their use is effective for a specific entity is left to the entity to determine. "Maintenance correctable issues," which may result in part from misoperations, are a part of using Attachment A to develop a Performance Based PSMP.		
Corporate Compliance	No	Battery visuals should be changed from 3 months to 6 months. Electrolyte levels of today's lead-calcium batteries are relatively stable for a 6 month period compared to lead-antimony batteries used in the past.
Response: Thank you for your comments. The activity related to this interval is to verify various basic operating parameters. The SDT believes that extension of verification of these parameters beyond the interval within the Standard is inappropriate.		

Organization	Yes or No	Question 1 Comment
Northeast Power Coordinating Council	No	1. Clarification is needed for “to a location where action can be taken”. Some examples in the FAQ will help in this clarification. 2. What type of documentation is required to show compliance that maintenance correctable issue has been reported? 3. Clarify the removal of requirement (see redline version, third row of Table 1a) for testing of unmonitored breaker trip coils. Is it the intention of the SDT to remove a requirement that would drive the industry to install TC monitors on breakers to improve reliability? 4. UFLS/UVLS DC control and trip circuits (Rows 5 and 6 of Table 1a) - Due to the distributed nature of this program, random failures to trip are not impactive to the overall operation of the UFLS protection. There should be no requirement to check the DC portion of these protections any more often than the DC circuit checks associated with that LV breaker. Since it is clear the requirement does not include the need to trip the breakers why the need to check the trip paths? Deletion of this requirement leaves the requirement to check only the relays and relay trip outputs from the protections every 6 years (or as often as the protective relay component type). Should the maintenance activities for “UVLS and UFLS relays that comprise a protection scheme distributed over the power system” not be the same as “Protective Relays”? V and I sensing to relays have a 12 year Maximum Maintenance Interval listed. It is good work practice to have this activity done the same time as maintenance activities associated with relay maintenance. 5. What is the basis for the various Maximum Maintenance Intervals listed in Table 1a? 6. From page 12 of the redline version, for "Station dc Supply (used only for UFLS and UVLS)", is the requirement applicable to distribution substations only? 7. For “Control and trip circuits with unmonitored solid-state trip or auxiliary contacts (UFLS/UVLS Systems only)” under Maintenance Activities - the word “complete: may be removed as it requires to actually trip the breakers. The sentence that tripping of the circuit breakers is not required contradicts with the word “complete”. More specifics are

Organization	Yes or No	Question 1 Comment
		required to spell out the adequate testing e.g. up to the lockout with the trip paths isolated etc. See Page 12 of the redline version. 8. For “Station dc Supply” having 18 calendar months as the Maximum Maintenance Interval, a battery has a 20 year life. IEEE standard PM is on a quarterly basis. What is the basis of the 18 calendar month interval? See page 12 of the redline version. 9. For “Associated communications systems” with a Maximum Maintenance Interval of 6 Calendar years, why is this required? The text "Verify proper functioning of communications equipment inputs and outputs that are essential to proper functioning of the Protection System. Verify the signals to/from the associated protective relay(s)" seems sufficient to ensure reliability. See page 15 of the redline version. 10. For “Relay sensing for Centralized UFLS or UVLS systems UVLS and UFLS relays that comprise a protection scheme distributed over the power system” under maintenance activities, clarify “overlapping segments”. What is the specified interval? Is actual breaker tripping required? See page 15 of the redline version. 11. On the row for Associated communications systems in Table 1c, in the Level 3 Monitoring Attributes for Component column, suggest a change in wording to: Evaluating the performance and quality of the channel as well as the performance of any interface to connected protective relays and alarming if the channel/protective relay connections do not meet performance criteria. 12. In Table 1c it is required to report the detected maintenance correctable issues within 1 hour or less to a location where action can be taken to initiate resolution of that issue. Even for a fully monitored protection system component it can be difficult to report the action in 1 hour. A 24 hour period for both Level 2 and Level 3 reporting of maintenance correctable issues is recommended.
Response: Thank you for your comments. 1. This is addressed in the Supplementary Reference document as posted with this draft (Section 8.1 and Section 13), and within the		

Organization	Yes or No	Question 1 Comment
		FAQ as posted with this draft Standard (V.3.D). 2. Specific effective forms of documentation are left to the entity to determine, but the SDT believes that this could include, among other things, work orders addressing the maintenance correctable issue. 3. The Tables have been rearranged and considerably revised to simplify and improve clarity. Please see new Table 1-5. Specifically to your comment, the SDT initially specified inspection of trip-coil monitoring functions at intervals of 3 months, with tripping otherwise requried annually. This has been revised to simply require tripping at 6-calendar-month intervals. 4. The Tables have been rearranged and considerably revised to improve clarity. Please see new Table 1-5. 5. Please see Supplementary Reference, Section 8.3. 6. The Tables have been rearranged and considerably revised to improve clarity. Please see new Table 1-4. Specifically for this item, this applies to whatever interrupting device is being tripped by the UFLS/UVLS. To the degree that the same interrupting devices are tripped by other Protection System components, the relevant Requirements apply. 7. The Tables have been rearranged and considerably revised to improve clarity. Please see new Table 1-5. 8. This interval is based on EPRI and other industry documents referencing these specific activities. 9. The Tables have been rearranged and considerably revised to improve clarity. Please see new Table 1-3. 10. The Tables have been rearranged and considerably revised to improve clarity. Please see new Table 1-1. 11. The Tables have been rearranged and considerably revised to improve clarity. Please see new Table 1-3. **12.** The Tables have been rearranged and considerably revised to improve clarity. Please see new Table 2. This requirement is now uniformly 24 hours as suggested within the comment.
SERC Protection and Control Sub-committee (PCS)	No	1. Clarifications need to be made on testing requirements on trip contacts relative to microprocessor vs. EM relays. There appears to be an inconsistency in the use of “check” vs. “verify” in the tables. 2. Also, Table 1B, in the second to last row, should be referring to UFLS rather than SPS. 3. Also, note that M2 incorrectly excludes distribution provider.

Organization	Yes or No	Question 1 Comment
		4. In battery maintenance table, we suggest that “cell/unit” be changed to “cell or unit.”
Response: Thank you for your comments. 1. The Tables have been rearranged and considerably revised to improve clarity. Please see new Table 1-5. 2. The Tables have been rearranged and considerably revised to improve clarity. Please see new Table 1-5. 3. Measure M2 has been corrected as suggested. **4.** The Tables have been rearranged and considerably revised to improve clarity. Please see new Table 1-4.		
BGE	No	Comment 1.1: In its decision to use “calendar years” with the maintenance intervals prescribed for most components the SDT has provided a framework that is consistent with a well-run PSMP but with enough flexibility to be practical. However BGE believes the application of this approach to short maintenance intervals, like three months for some battery maintenance will risk numerous violations due to practical scheduling constraints that are not a realistic threat to reliability. As the requirements are presently defined the inherent flexibility for battery maintenance that is nominally done on three month intervals may be as long as 1/3 of the interval or as short as one day (Our interpretation: Maintenance last done on January 1 is next due on April 1 and can be done no later than April 30. Maintenance done on Jan 31 is next due on April 30 and is overdue if done on May 1). The only practical solution is to increase the frequency so that the average intervals are significantly shorter than the nominal requirement.BGE recommends an alternate formulation for intervals if the nominal interval is less than one year. Some possible alternatives (assuming a three month nominal interval): Once per calendar quarter no later than the end of the quarter no earlier than one month before it. Four times per year, no more than 120 days apart no less than 60. Comment 1.2: On page 11, Row-3/Column-1 of Table-1a includes the following entry for functional trip testing:"Control and trip circuits with electromechanical trip or auxiliary contacts (except for microprocessor relays, UFLS or UVLS)". It is not clear why

Organization	Yes or No	Question 1 Comment
		electromechanical trip contacts in microprocessor relays are excluded. Comment 1.3: On page 12, Row-3/Column-3 of Table-1a includes the following Verification Task for Station DC Supplies: "Verify Battery cell-to-cell connection resistance". Multiple cell units do not provide the ability to measure cell-cell resistance.
Response: Thank you for your comments. 1. The intervals remain as prescribed within the Standard and are designed to be effective, clear, and consistently monitored for compliance; the SDT is not prescribing or suggesting what measures an entity may take within their program to assure compliance. 2. The Tables have been rearranged and considerably revised to improve clarity. Please see new Table 1-5. **3.** This element of the table has been modified to state, "Battery internal cell-to-cell or unit-to-unit connection resistance (where available to measure)" to address this comment.		
Constellation Power Generation	No	1. Constellation Power Generation (CPG) does not agree with the maximum maintenance interval for associated communication systems and station dc supply that has as a component any type of battery, which is 3 months. If the intent of the drafting team was to make this test quarterly (as recommended in IEEE-450), than the maximum interval should be 4 months. As written, for a registered entity to ensure they complete this test in an interval less than 3 months, they will most likely complete this test every 2 months. This causes two additional and unwarranted tests every year. CPG recommends an alternate formulation for intervals if the nominal interval is less than one year. Some possible alternatives (assuming a three month nominal interval): Once per calendar quarter no later than the end of the quarter no earlier than one month before it. Four times per year, no more than 120 days apart no less than 60. 2. CPG does not agree with differentiating between the different battery types. A suggestion would be to take the maximum maintenance interval for all the battery types, which is 6 years, and apply them across all types of batteries, eliminating the need to

Organization	Yes or No	Question 1 Comment
		differentiate between them. Furthermore, multiple cell units do not provide the ability to measure cell-cell resistance, and so that requirement should be removed. 3. CPG is not clear why electromechanical trip contacts in microprocessor relays are excluded in Table 1a.
Response: Thank you for your comments. 1. The intervals remain as prescribed within the Standard and are designed to be effective, clear, and consistently monitored for compliance; the SDT is not prescribing or suggesting what measures an entity may take within their program to assure compliance. 2. The appropriate maintenance activities and intervals differ considerably for various battery types. This element of the table has been modified to state, "Battery internal cell-to-cell or unit-to-unit connection resistance (where available to measure)" to address this comment. **3.** The Tables have been rearranged and considerably revised to improve clarity. Please see new Table 1-1.		
Exelon	No	Exelon does not completely agree with the minimum maintenance activities and maximum allowable intervals as suggested by SDT. Comments on minimum maintenance activities: 1. Reference Table 1a (Page 11) of Standard PRC-005-2: With regard to the maintenance activity: "Verify that the station battery can perform as designed by conducting a performance .....". The standard should clearly define what is meant by "perform as designed" to eliminate ambiguity in future interpretations. 2. Also, Table 1a Station dc supply (that has as a component Vented Regulated Lead-Acid batteries) discusses "modified performance capacity test of the entire battery bank". This needs additional clarification or should be reworded because modified test includes both the performance test (which is the capacity test) and the service test. Should be reworded to be "modified performance test". 3. Comments on maximum allowable intervals: Nuclear generating stations have refueling outage schedule windows of approximately

Organization	Yes or No	Question 1 Comment
		18 months or 24 months (based on reactor type). If for some reason the schedule window shifts by even a few days, an issue of potential non-compliance could occur for scheduled outage-required tasks. The possibility exists that a nuclear generator may be faced with a potential forced maintenance outage in order to maintain compliance with the proposed standard. For the requirements with a maximum allowable interval that vary from months to years (including 18 Months surveillance activities), the SDT should consider an allowance for NRC-licensed generating units to default to existing Operating License Technical Specification Surveillance Requirements if there is a maintenance interval that would force shutting down a unit prematurely or face non-compliance with a PRC-005 required interval. Therefore, Tables 1a, 1b & 1c should include an allowance for any equipment specifically controlled within each licensee's plant specific Technical Specifications to implement existing Operating License requirements if such a conflict were to occur. Please see additional comments under Q7.
Response: Thank you for your comments. 1. This concern is addressed within IEEE standards (specifically IEEE 450, IEEE 1188, and IEEE 1106) by their description and definition of a "performance test" as further established within this requirement. The SDT believes that entities involved in battery maintenance will be familiar with these IEEE standards. 2. The Tables have been rearranged and considerably revised to improve clarity. Please see new Table 1-4. **3.** The intervals and activities specified are believed by the SDT to be technically effective, in a fashion that may be consistently monitored for compliance. It is left to the the entity to determine how to align these requirements with requirements of other regulations and with operational concerns. Entities should be able to complete the activities with 18-month or shorter intervals without outages. See the SDT responses to your comments in Question 7.		
Black Hills Power	No	1. For Protective Relays, Table 1a Maintenance Activities has no requirement for verifying output contacts on non-microprocessor based relays. The actual contacts used for tripping should be verified by this activity.

Organization	Yes or No	Question 1 Comment
		2. For Protective Relays, Table 1b Maintenance Activities states "Verify correct operation of output actions that are used for tripping". This requirement is vague and needs to define whether all protection logic or conditions that would initiate a relay trip output are required to be simulated and tested to the relay tripping output contact. 3. For Voltage and Current Sensing Inputs to Protective Relays and associated circuitry, Table 1a references "current and voltage signals" and Table 1b references "current and voltage circuit signals". Need consistency or definitions to meet this requirement. 4. For Control and trip circuits with electromechanical trip or auxiliary (UFLS/UVLS Systems Only), Table 1a states "except that verification does not require actual tripping of circuit breakers or interrupting devices." This exception to the requirement seems to defeat the whole purpose of the standard and leaves a huge gap open to interpretation and conflict. -For Control and trip circuits with unmonitored solid-state trip or auxiliary contacts (UFLS/UVLS Systems Only), Table 1a states "except that verification does not require actual tripping of circuit breakers or interrupting devices." This exception to the requirement seems to defeat the whole purpose of the standard and leaves a huge gap open to interpretation and conflict. 5. For Station dc supply, Table 1a requirement includes "Inspect: The condition of non-battery-based dc supply." This is redundant with the requirements of the section Station dc supply (battery is not used) and should be removed from this section. 6. For Voltage and Current Sensing Inputs to Protective Relays and associated circuitry, a maximum interval of verification of 12 years seems to contradict the intent of the rest of the Maintenance standard which dictates 6 years on all of the other components. The requirement for these components should fall in line with the rest of the standard.
Response: Thank you for your comments. 1. The Tables have been rearranged and considerably revised to improve clarity. Please see new Table 1-1. 2. The Tables have been rearranged and considerably revised to improve clarity. Please see new Table 1-1. "Verify" is defined within		

Organization	Yes or No	Question 1 Comment
the PSMP defintion. 3. The Tables have been rearranged and considerably revised to improve clarity. Please see new Table 1-3. 4. The Tables have been rearranged and considerably revised to improve clarity. Please see new Table 1-5. This is an intentional difference between UFLS/UVLS and the remainder of the Protection Systems addressed within the Standard, because of the distributed nature of UFLS/UVLS and because these devices are usually tripping distribution system elements. 5. The Tables have been rearranged and considerably revised to improve clarity. Please see new Table 1-4. **6.** The Tables have been rearranged and considerably revised to improve clarity. Please see new Table 1-3. These devices are not typically subject to in-service degradation to the degree that those with 6-year intervals are. Entities have the latitude to perform maintenance more frequently than specified if they feel that such maintenance is needed.		
Duke Energy	No	General comment - the draft changes the word “verify” to “check” in several places; should use consistent phrasing throughout the standard. With regards to Table 1a, we have the following comments: 1. Control and trip circuits with electromechanical trip or auxiliary contacts (except for microprocessor relays. UVLS or UFLS) - We believe that while there may be value in a 6 calendar year cycle, this will be difficult to accomplish, since you either have to get outages scheduled or block protection, which risks reliability. Since this is essentially a re-commissioning check, the cycle should be 12 calendar years. Also 6 years appears to be in conflict with the system protection standard. 2. Control and trip circuits with unmonitored solid-state trip or auxiliary contacts (except for UVLS or UFLS) - agree with 12 calendar years as consistent with electromechanical above. 3. Control and trip circuits with electromechanical trip or auxiliary (UVLS or UFLS Systems Only) - 6 year cycle should be changed to 12 calendar years (see comment above on non-UVLS/UFLS). 4. Control and trip circuits with unmonitored solid-state trip or auxiliary contacts (UVLS or

Organization	Yes or No	Question 1 Comment
		UFLS Systems Only) - agree with change to 12 calendar years. 5. Station dc Supply (used only for UVLS or UFLS) - Strike the word "Station". We don't differentiate between dc supply used for UFLS and other protection. 6. Station dc supply - Change 18 calendar months to 24 months, since this testing requires generator outages. Nuclear plant fuel cycles can be longer than 18 months. 7. Associated communications systems - More clarity is needed regarding what is to be included in the definition of "Associated".
Response: Thank you for your comments. "Check" is not an element of the PSMP definition. The term has been replaced throughout the tables with whatever term of the definition is relevant. 1. The Tables have been rearranged and considerably revised to improve clarity. Please see new Table 1-5. The circuit itself is 12 years, but interval for the electromechanical devices such as aux or lockout relays remains at 6 years, as these devices contain "moving parts" which must be periodically exercised to remain reliable. 2. The Tables have been rearranged and considerably revised to improve clarity. Please see new Table 1-5. 3. The Tables have been rearranged and considerably revised to improve clarity. Please see new Table 1-5. 4. The Tables have been rearranged and considerably revised to improve clarity. Please see new Table 1-5. 5. The Tables have been rearranged and considerably revised to improve clarity. Please see new Table 1-4. 6. The SDT believes the specified intervals and activities are technically effective, and in a fashion that may be consistently monitored for compliance. The entity must determine how to best align these requirements with requirements of other regulations and with operational concerns. Entities should be able to complete the activities with 18-month or shorter intervals without outages. **7.** This portion of the definition of Protection System has been modified for clarity. Also, the Tables have been rearranged and considerably revised to improve clarity. Please see new Table 1-3.		
American Electric Power	No	1. In Table 1a for the component "Station dc Supply (used only for UVLS and UFLS)", the

Organization	Yes or No	Question 1 Comment
		interval prescribed is "(when the associated UVLS or UFLS system is maintained)" and the activity is to "verify the proper voltage of the dc supply". The description of the interval "(when the associated UVLS or UFLS system is maintained)" needs to be changed. Relay personnel do not generally take battery readings. The interval should read “according to the maximum maintenance interval in table 1a for the various types of UFLS or UVLS relays". The testing does not need to be in conjunction with the relay testing, it is only the test interval that is important, although relay operation during relay testing is a good indicator of sufficient voltage of the battery. 2. The monitoring and/or maintenance activities listed for batteries are not appropriate in Tables 1b and 1c. There are no commercial battery monitors that monitor and alarm for electrolyte level of all cells. Why not move the electrolyte level to the 18 month inspection and actually open the possibility of condition monitoring to commercially available devices? Or give an option to do the electrolyte check at other time intervals (perhaps 12 months) by visual electrolyte inspection and still allow the monitoring of other functions on the listed 6 year schedule using condition monitoring. It makes no sense to prescribe an unattainable condition monitoring solution. The way that the tables are written, there is no advantage to use the charger alarms since battery maintenance requirements are not reduced in any way.
Response: Thank you for your comments. 1. The Tables have been rearranged and considerably revised to improve clarity. Please see new Table 1-4. **2.** The Tables have been rearranged and considerably revised to improve clarity. Please see new Table 1-4.		
Great River Energy	No	1. In Table 1a section-Station DC Supply - 18 calendar months, under Maintenance Activities column, suggest changing under Verify: Battery terminal connection resistance To: Entire battery bank terminal connection resistance (This could have been interpreted as individual batteries) And change: Battery cell-to-cell connection resistance To: Battery cell-to-cell connection resistance, where an external mechanical connection is available.

Organization	Yes or No	Question 1 Comment
		2. In Table 1a-Station dc supply (that has a component Valve Regulated Lead-Acid batteries) suggest changing Max Maintenance Interval=3 Calendar Years or 3 Calendar Months to 4 Calendar Years or 12 Calendar Months. Our concern is that the insurance companies may push NERC maintenance intervals on all battery banks not associated with the BES. 3. Table 1a-Station dc supply (that has as a component Lead-Acid batteries) Max Maintenance Interval=6 Calendar Years suggest changing to 10 Calendar Years. Reason: performance tests may degrade the battery. 4. Table 1a-Station dc supply (that has as a component Nickel-Cadmium batteries) Max Maintenance Interval=6 Calendar Years suggest changing to 10 Calendar Years. Reason: performance tests may degrade the battery. 5. Table 1b -Level 2 Monitoring Attributes for Component in the row labeled (Control and trip circuitry) we suggest the following change: If a trip circuit comprises multiple paths, at least one of those paths is monitored. Alarming for loss of continuity or dc supply for trip circuits is reported to a location where action can be taken. 6. While all tripping circuits are not completely monitored, the trip coils and the outdoor cable runs are completely monitored. The only portion that would not be monitored is a portion of inter and intra-panel wiring having no moving parts located in a control house. Our company has extremely low failure rate of panel wiring and terminal lugging. I don't think that there is provision for moving control and trip circuitry to performance based maintenance? This control circuitry should be maintained less frequent than un-monitored trip circuits (6 years).

Response: Thank you for your comments.

1. The Tables have been rearranged and considerably revised to improve clarity. Please see new Table 1-4. This element of the Table has been modified to state, "Battery internal cell-to-cell or unit-to-unit connection resistance (where available to measure)" to address this comment.

Organization	Yes or No	Question 1 Comment
2. NERC Standards are limited to facilities and equipment related to the BES. How the Standard may be otherwise used is outside the scope of NERC Standards. 3. The SDT disagrees, and believes that a performance test at 6-year intervals is appropiate for Ni-Cad batteries. A properly maintained battery, according to various credible references (from IEEE, EEI, EPRI, various manufacturers, etc.), can easily handle multiple deep discharges over its expected life. 4. The SDT disagrees, and believes that a performance test at 6-year intervals is appropiate for Vented Lead Acid and Ni-Cad batteries. A properly maintained battery, according to various credible references (from IEEE, EEI, EPRI, various manufacturers, etc.), can easily handle multiple deep discharges over its expected life. 5. The Tables have been rearranged and considerably revised to improve clarity. Please see new Table 1-5. **6.** The Tables have been rearranged and considerably revised to improve clarity. Please see new Table 1-5. Nothing in the draft Standard (including Attachment A) precludes an entity from using performance-based maintenance for dc control circuits.		
Long Island Power Authority	No	1. In Table 1c it is required to report the detected maintenance correctable issues within 1 hour or less to a location where action can be taken to initiate resolution of that issue. Even for a fully monitored protection system component it can be difficult to report the action in 1 hour. LIPA recommends a 24 hour period for both Level 2 and Level 3 reporting of maintenance correctable issues. The time identified is report time and not response time to correct issue. 2. LIPA seeks clarification on “to a location where action can be taken”. Some examples in the FAQ will help in this clarification. 3. What type of documentation is required to show compliance that maintenance correctable issues have been reported? 4. What is the basis of the various Maximum Maintenance Intervals tabulated in Table 1a-Time based maintenance?
Response: Thank you for your comments.		

Organization	Yes or No	Question 1 Comment
1. The Tables have been rearranged and considerably revised to improve clarity. Please see new Tables 1-1 through 1-5 and Table 2. These Tables reflect your proposed change. 2. This is addressed in the Supplementary Reference document as posted with this draft (Section 8.1 and Section 13), and within the FAQ as posted with this draft Standard (V.3.D). 3. Specific effective forms of documentation are left to the entity to determine, but the SDT believes that this could include, among other things, work orders addressing the maintenance correctable issue. **4.** Please see Section 8.3 of the Supplementary Reference document.		
Northeast Utilities	No	1. In Table 1c it is required to report the detected maintenance correctable issues within 1 hour or less to a location where action can be taken to initiate resolution of that issue. Even for a fully monitored protection system component it can be difficult to report the action in 1 hour. Recommend a 24 hour period for both Level 2 and Level 3 reporting of maintenance correctable issues. 2. Additionally, please clarify meaning of "to a location where action can be taken".
Response: Thank you for your comments. 1. The Tables have been rearranged and considerably revised to improve clarity. Please see new Tables 1-1 through 1-5 and Table 2. These tables reflect your proposed change. **2.** This is addressed in the Supplementary Reference document as posted with this draft (Section 13), and within the FAQ as posted with this draft Standard (V.3.D).		
MidAmerican Energy Company	No	1. In the tables trip circuit has been replaced by "control and trip circuit". From the context of the standard and the reference and frequently asked question documents it is clear that the requirement is to test the trip circuit only. Adding the word "control' introduces ambiguity and the potential to imply the closing circuit of the interrupting device also requires testing under the standard. The word "control" should be removed. On this same subject the nomenclature in Table 1b for type of protection system component is

Organization	Yes or No	Question 1 Comment
		not consistent with Table 1a.In Table 1b in the Level 2 Monitoring Attributes for Component column for Relay sensing for centralized UFLS or UVLS systems there is a reference to SPS. This reference should likely be to UFLS/UVLS. 2. In Table 1a functional testing of associated communications systems is included with a maximum maintenance interval of 3 calendar months. Testing of this equipment at that frequency is not believed to be necessary. It is suggested that the interval be changed to 12 calendar months. 3. For control and trip circuit maintenance the requirement includes "a complete functional trip test". In order to accomplish this type of testing given current design of lock-out relay and interrupting device trip circuitry multiple breakers and line terminal outages would be required simultaneously. In addition complete functional testing has the potential to result in unintentional tripping of equipment that could cause equipment damage and customer outages. Segmentation of trip circuits by lifting wires has the potential for incorrect restoration following testing. This type of testing has the potential to degrade system reliability as multiple entities schedule this work. An alternate to complete functional testing that does not potentially degrade system reliability should be substituted.
Response: Thank you for your comments. 1. The Tables have been rearranged and considerably revised to improve clarity. Please see new Table 1-5. 2. The SDT believes that the 3-month interval is proper for unmonitored communications systems. **3.** The Tables have been rearranged and considerably revised to improve clarity. Please see new Table 1-5. The interval for maintenance of electromechanical devices such as aux or lockout relays remains at 6 years, as these devices contain "moving parts" which must be periodically exercised to remain reliable.		
Nebraska Public Power District	No	1. It would be very helpful in Table 1a, 1b, and 1c to reference the FAQ or Supplemental Reference by page number and section number for the corresponding

Organization	Yes or No	Question 1 Comment
		Maintenance Activity statements. 2. Table 1a, Control and Trip Circuits with electromechanical trip or auxiliary contact - how is the control and trip circuit functional trip test performed without affecting the BES or without tripping more than just the breaker (trip coil)? What is the basis for an actual trip of the breaker that will affect the BES? Functional trip testing will require extensive analysis and could involve an extensive testing evolution to ensure the correct circuit is tested without unexpected trip of other components, particularly for generator protection systems. The complexity of the system and the test would be conducive to an error that resulted in excessive tripping, thus affecting the reliability of the BES. It would seem that the potential for an adverse affect from this test would be greater than the benefit gained of testing the circuit. In addition, scheduling outages to perform the functional trip testing in conjunction with other outages required to perform maintenance and other construction activities will be difficult due to the large number of outage requirements for the functional testing. This will challenge the BES more often and thus reduce reliability. 3. 2. Table 1a, Control and Trip circuits with electromechanical trip or auxiliary contacts - What is the differentiation between control and trip circuits? The FAQ appears to use the term interchangeably. 4. Table 1a, associated communication systems - What is the basis for checking that the associated communication equipment is functioning every 3 calendar months for unmonitored components? NPPDs experience indicates that a check every 6 months is sufficient.

Response: Thank you for your comments.

1. The Tables have been rearranged and considerably revised to improve clarity. Please see new Tables 1-1 through 1-5. Doing as you suggest would make the supporting information with the FAQ and Suppementary Reference part of the Standard, and this would add extensive and unnecessary prescription to the Standard.

2. The Tables have been rearranged and considerably revised to improve clarity. Please see new Table 1-5. These devices contain

Organization	Yes or No	Question 1 Comment
"moving parts" which must be periodically exercised to remain reliable. 3. The Tables have been rearranged and considerably revised to improve clarity. Please see new Table 1-5. The FAQ has been modified. 4. The SDT believes that the 3-month interval is proper for unmonitored communications systems.		
Y-W Electric Association, Inc.	No	Many of the changes to the proposed standard are reasonable and improve the clarity of the standard and its requirements. However, Y-WEA concurs with Central Lincoln and FMPA on their comments regarding the testing of battery cell-to-cell connection resistance. Many types of stationary batteries are actually blocks of two or more cells that are internally connected. This requirement would necessitate either some sort of feasibility exception process (which, as shown by the TFE process with the CIP standards can be very difficult, cumbersome, and time-consuming to develop and administer) or replacement of the batteries in question, which would pose enormous burdens on small entities that must comply with this standard. The language in this requirement should be changed from "cell-to-cell" to "unit-to-unit" in order to avoid these issues.
Response: Thank you for your comments. The Tables have been rearranged and considerably revised to improve clarity. Please see new Table 1-4. This element of the table has been modified to state, "Battery internal cell-to-cell or unit-to-unit connection resistance (where available to measure)" to address this comment.		
Progress Energy Carolinas	No	1. The modified definition of "Protection System" (page 2 of the clean version of PRC-005-2) uses the terminology "control circuitry associated with protective functions" whereas Table 1a rows 3-6, Table 1b Rows 3 and 5, and Table 1c Row 4 uses the terminology "control and trip circuits." This is a conflict. "Control" implies that the standard applies to closing/reclosing circuits as well. We do not believe that is the intent. 2. Row 7 of Table 1a (page 10 of the clean version of PRC-005-2) indicates that proper

Organization	Yes or No	Question 1 Comment
		voltage of the station dc supply must be verified when the associated UVLS or UFLS maintenance is performed. It is not clear whether this requirement is over and above the quarterly and 18-month battery maintenance listed elsewhere in the table or is it the only battery maintenance required for UVLS and UFLS systems? If the intent is to check the station dc supply only when UVLS and UFLS maintenance is performed, the other rows addressing station dc should be revised to exclude UVLS and UFLS. 3. Row 4 of Table 1b (page 14 of the clean version of PRC-005-2) indicates that remote alarms must be verified every twelve calendar years for control circuitry (trip circuits) (except UFLS/UVLS) provided "Monitoring of Protection System component inputs, outputs, and connections" exists. Clarification should be made to indicate how to monitor inputs. For example, a breaker auxiliary switch is relied upon to communicate breaker status to a protective relay. If the switch is out of adjustment so that incorrect breaker status is reported to the relay, the relay may not operate when needed. Could proper operation of the auxiliary contacts be credited through in-service operation or the six-year breaker operation maintenance? 4. The term "calendar years" is used to define the maximum intervals. Does this mean that a six-year PM could go one-day shy of seven years? For example, if a six-year maintenance PM was last performed on 1/1/2010, it would be due on 1/1/2016. Could this allow until 12/31/2016 to complete the maintenance? 5. Table 1b, Row 14 (Row 2 on page 17): Under the "Level 2 Monitoring Attributes for Component," UFLS/UVLS should be referenced instead of SPS. 6. Clarifications need to be made on testing requirements on trip contacts relative to microprocessor vs. EM relays. 7. There appears to be an inconsistency in the use of "check" vs. "verify" in the tables. 8. In battery maintenance table, we suggest that "cell/unit" be changed to "cell or unit."
Response: Thank you for your comments.		

Organization	Yes or No	Question 1 Comment
1. The Tables have been rearranged and considerably revised to improve clarity. Please see new Table 1-5. 2. The Tables have been rearranged and considerably revised to improve clarity. Please see new Table 1-4. 3. The Tables have been rearranged and considerably revised to improve clarity. Please see new Table 1-5. To the degree that in-service test-operating of the breaker also performs the specified maintenance on other portions of the Protection System, the entity should be able to document and "take credit" for it. 4. Your explanation of "6 Calendar Years" is correct. 5. The Tables have been rearranged and considerably revised to improve clarity. Please see new Tables 1-1 through 1-5. 6. The Tables have been rearranged and considerably revised to improve clarity. Please see new Table 1-1 and 1-5. 7. "Check" is not an element of the PSMP definition. This term has been replaced throughout the Tables with whatever term of the definition is relevant. **8.** The Tables have been rearranged and considerably revised to improve clarity. Please see new Table 1-4.		
PPL Supply	No	PPL Generation, on behalf of the entities listed above, has the following comments on the dc entries in these tables: 1. Table 1a, Table 1b, Table 1c- Station DC supply - Maintenance Activities - references substation batteries. For generators, shouldn't that reference be station battery? Substation implies an association strictly with transmission, not generation. 2. Station DC supply - verify Battery continuity. What is the technical basis for this requirement? Neither battery installation and operation instructions nor technical reviews explain the basis for how this verification is supposed to work. NERC's Protection System Maintenance: A Technical Reference does not address this requirement. The Frequently-Asked Questions provides some ways that this verification can be completed. However, one example is tied to the microprocessor battery chargers. If there is a technical basis for this requirement, it should be provided. 3. Condition based monitoring on station dc supply - it appears the Table 1b excludes any

Organization	Yes or No	Question 1 Comment
		condition based monitoring of the batteries because of the requirement for monitoring electrolyte level, individual cell state of charge, cell to cell and battery terminal resistance. Most monitoring equipment does not monitor those functions. 4. In general, the Tables are especially confusing in the dc system area. The "lines" overlap and need to be labeled, so they can be referenced in a maintenance document to show how the appropriate program can be followed. Each line should be separate in the function stated, so one can identify what has to be done to comply. 5. Provide examples of "non-battery-based dc equipment" that is covered under this standard. 6. For dc supply, the changes from the Sept. 2007 NERC "Protection System Maintenance", A Technical Reference seem too restrictive. The Sept. 2007 document contained a solid maintenance program. What is the basis for the change?
Response: Thank you for your comments. 1. The Tables have been rearranged and considerably revised to improve clarity. Please see new Table 1-4. This has been corrected in the revision. 2. Please see the FAQ (I.5.B, I.5.C and I.5.D) 3. The Tables have been rearranged and considerably revised to improve clarity. Please see new Table 1-4. 4. The Tables have been rearranged and considerably revised to improve clarity. Please see new Table 1-4. 5. The SDT has been advised that entities are considering or using technologies such as flywheels and fuel cells. Also, we have been told that some entities are using modern battery chargers without the battery. **6.** When developing the original technical reference, the SPCTF was not challenged to develop a complete, measurable Standard. The SDT used the original document as a starting point to develop actual requirements, etc.		
San Diego Gas & Electric	No	1. Proofing of CT circuits is not always trivial. Given this function is not presently being performed and documented by the company, a reasonable grace period would be

Organization	Yes or No	Question 1 Comment
		required to achieve compliance. The company believes present practice, such as verification that relay current inputs are not zero and that phases are balanced, is a reasonable indication individual CTs are functioning properly. 2. An entities protection system maintenance program is a Time Based Maintenance program. The protection system maintenance program describes the maintenance intervals and states that the protection system maintenance is triggered every 4 years. The maintenance program describes that the due date for compliance is 6 months past the trigger date to allow for planning and scheduling of the maintenance activity. Therefore the actual due date for the 4 year maintenance interval is 4 years and six months from the last maintenance completion date. The four year six month time based interval is within the six year maximum time based interval as required by PRC-005-2. Given the above, is the four year six month interval as described in the entities maintenance program compliant with PRC-005-2?
Response: Thank you for your comments. 1. The Tables have been rearranged and considerably revised to improve clarity. Please see new Table 1-3. The intervals remain as prescribed within the Standard and are designed to be effective, clear, and consistently monitored for compliance; the SDT is not prescribing or suggesting what measures an entity may take within their program to assure compliance. "Grace periods" within the Standard are not measurable, and would probably lead to persistently increasing intervals. However, an entity may establish an internal program with grace-period allowance, as long as the entire program (including grace periods) does not exceed the intervals within the Standard. Simply observing non-zero instrument transformer outputs may not be sufficient to determine that the values are acceptable. **2.** "Grace periods" within the Standard are not measurable, and would probably lead to persistently increasing intervals. However, an entity may establish an internal program with grace-period allowance, as long as the entire program (including grace periods) does not exceed the intervals within the Standard.		
Springfield Utility Board	No	SUB appreciates the effort to try to strike a balance between specificity around a specific standard and flexibility to meet the requirement under the standard. The maximum

Organization	Yes or No	Question 1 Comment
		allowable intervals don't seem unreasonable combined with the implementation schedule. However, it seems that the proposed changes stray toward a proscriptive set of maintenance that 1) does not allow for an alternate method of testing and 2) sets unrealistic testing requirements. For example, battery terminal to terminal testing is not feasible with all battery systems. This is a consistent message SUB has heard from others as well. First and foremost - a test or maintenance must be done for each device within the defined interval. With that in mind...SUB's preference would be that the maintenance activities focus on what specifically must be done for a device (may be type specific) vs. what could be done for a device for compliance (as an example of what an auditor could look for when conducting an audit) vs. alternative best-practices for testing and maintenance that the entity demonstrates constitutes as maintenance or test. With regard to the first (maintenance activities focus on what specifically must be done for a device) - it seems that this would apply to a limited number of devices With regard to the second (maintenance activities focus on what specifically can be done for a device) - it seems that this would apply broad number of devices and the list of what can be done should be broad to cover a range of different devices that provide the same function. With regard to the last (alternative best-practices for testing and maintenance that the entity demonstrates constitutes as maintenance or test), it would be helpful to have a mechanism outside the standard itself to either have a NERC technical group craft a series of criteria that must be met for an acceptable alternative maintenance or the entity document the criteria used to determine an adequate test and provide for a test that meets that set of criteria). It would be anticipated that these would fall under a minority of devices.
Response: Thank you for your comments.		

Organization	Yes or No	Question 1 Comment
The Tables have been rearranged and considerably revised to improve clarity. Please see new Tables 1-1 through 1-5. In the draft Standard, the SDT is defining the basic parameters for an effective PSMP; the entity is required to develop its program with specific activities that would satisfy those basic parameters.		
The Detroit Edison Company	No	Suggest that the interval for cell ohmic testing on VRLA batteries be changed to 12 months. Also, include ohmic testing of NiCad batteries at 18 mos. as an option.
Response: Thank you for your comments. The activity related to this interval is to verify various basic operating parameters. The SDT believes that extension of verification of these parameters beyond the interval within the Standard is inappropriate.		
NorthWestern Corporation	No	Table 1a - Rows 3 & 4 (control and trip circuits) - add language in the Maintenance Activities - "except that verification does not require actual tripping of circuit breakers or interrupting devices"
Response: Thank you for your comments. The Tables have been rearranged and considerably revised to improve clarity. Please see new Table 1-5.		
We Energies	No	1. Table 1a, Protective Relays: Change 1st line to: “Test and calibrate if necessary the relays...”Table 1a, Protective Relays: 3rd line: Change “check the relay inputs...” to “verify the relay inputs...”. The term “check” is not defined, whereas “verify” is. Tables 1a & 1b We agree that six / twelve years is an acceptable interval for relay maintenance. 2. Table 1a & 1b, Control & Trip Circuits: The proposed addition to require tripping circuit breakers during Protection System maintenance is detrimental to BES reliability and should be removed. Ï 3. Generating unit protection system maintenance is done during scheduled outages. The high voltage breaker on a generating unit often remains energized to backfeed and supply station auxiliaries when the generator is offline. The proposed requirement will increase the amount of equipment requiring an outage for maintenance, and possibly

Organization	Yes or No	Question 1 Comment
		the length of the outage, resulting in significantly more equipment out of service as well as increased costs. This requirement also results in greater maintenance efforts and costs when there are redundant protection system equipment (breaker trip coils, lockout relays, etc), which is contrary to good practice and reliability. 4. Many of the breakers that We Energies, as the Distribution Provider, trips from its BES protection systems are not owned by We Energies and are owned by a separate transmission company. The trip testing and maintenance of the transmission company may not coincide with our relay maintenance testing program. The standard shall have allowances for the entity to ONLY test or maintain equipment that it OWNS! 5. Table 1a, Station dc supply: a. The activity to verify the state of charge of battery cells is too vague, and requires more specific action. We assume that the drafting committee is recommending specific gravity measurements. Specific gravity measurements have not been shown to an accurate indicator on state of charge. In addition, as shown in the nuclear power industry, there is no established corrective action that is taken based on specific gravity results (eg. Don't require a test where there is no acceptable corrective action). b. The activities to "verify battery continuity" and "check station dc supply voltage" are also vague and need to be more clearly specified what is intended. c. The 3 month time interval for battery impedance testing is too frequent. 18 month or annual testing is more appropriate. d. The 3 calendar year performance or service test is too frequent and will actually remove life from a battery and reduce reliability. Recommend capacity testing no more that every 5 years and more frequent test if the capacity is within 10% of the end of life or design. This is consistent with the nuclear power industry. 6. Table 1b, Station dc supply: Recommend a change or addition to Table 1b - Recommend a level 2 monitoring (not just a default to the level 1 maintenance activities)

Organization	Yes or No	Question 1 Comment
		which allows for the removal of quarterly "check" of electrolyte levels, DC supply voltage, and DC grounds - if station DC supply (charger) voltage is continuously monitored (eg. one should not have detrimental gassing of a battery if the float voltage of the battery is properly set and monitored). 7. Table 1a, Associated communications systems: The requirement to verify functionality every three months is excessive; verifying this every twelve months is adequate. 8. Tables 1a & 1b - Although the latest standard provided some additional clarification, more clarification is required on what maintenance / testing is ONLY required for UFLS/UVLS protection systems vs. BES protection systems (eg. UFLS / UVLS systems - Is a verification of proper voltage of the DC supply the only battery or DC supply required (eg. no state of charge, float voltage, terminal resistance, electrolyte level, grounds, impedance or performance test, etc.)?

Response: Thank you for your comments.

1. The Tables have been rearranged and considerably revised to improve clarity. Please see new Table 1-1. "Check" is not an element of the PSMP definition. This term has been replaced throughout the Tables with whatever term of the definition is relevant.
2. These devices contain "moving parts" which must be periodically exercised to remain reliable.
3. The intervals and activities specified are believed by the SDT to be technically effective, in a fashion that may be consistently monitored for compliance. It is left to the the entity to determine how to align these requirements with operational concerns.
4. The SDT contends that "its Protection Systems" is synonymous with "Protection Systems that it owns."
5. a.The SDT is not specifically requiring specific gravity tests, although they may be one effective method of meeting the requirement. Another method is to measure the individual cell voltage. R4 establishes that the entity must initiate resolution of maintenance-correctable issues, so it IS necessary to correct problems that are found.

   b.The Tables have been rearranged and considerably revised to improve clarity. Please see new Table 1-4. The SDT does not prescribe specific activities to satisfy the requirements, although some guidance may be found in the FAQ (II.5.B, II.5.C and

Organization	Yes or No	Question 1 Comment
II.5.D) and Supplementary Reference Section 15.4. c. The activity related to this interval is to verify basic operating parameters. The SDT believes that extension of verification of these parameters beyond the interval within the Standard is inappropriate. d. The SDT disagrees, and believes that a performance test at 3-year intervals is appropriate for Valve-Regulated Lead Acid batteries. A properly maintained battery, according to various credible references (from IEEE, EEI, EPRI, various manufacturers, etc.) can easily handle multiple deep discharges over its expected life. 6. The Tables have been rearranged and considerably revised to improve clarity. Please see new Table 1-4. 7. The SDT believes that the 3-month interval is proper for unmonitored communications systems. **8.** The Tables have been rearranged and considerably revised to improve clarity. Please see new Table 1-4.		
Hydro One Networks	No	1. Table 1a: a. V and I sensing to relays - 12 years? Why not perform this activity with maintenance activities associated with relay maintenance so that they line up? It would only be an incremental amount of work to perform this with associated relay maintenance work b. Removal of requirement for testing of unmonitored breaker trip coils? Is it really the intention of the SDT to remove a requirement that would drive the industry to install TC monitors on breakers to improve reliability? c. UFLS/UVLS DC control and trip circuits - Due to the distributed nature of this program, random failures to trip are not impactive to the overall operation of the UFLS protection. There should be no requirement to check the DC portion of these protections any more often than the DC circuit checks associated with that LV breaker. Since it is clear the requirement does not include the need to trip the breakers why the need to check the trip paths? Deletion of this requirement leaves the requirement to check only the relays and relay trip outputs from the protections every 6 years (or as often as the protective relay component type). d. Along the same lines as the above comment should the maintenance activities for

Organization	Yes or No	Question 1 Comment
		"UVLS and UFLS relays that comprise a protection scheme distributed over the power system" not be the same as "Protective Relays" 2. Table 1c: a. Level 3 attributes for "Associated communications systems" might better read "Evaluating the performance and quality of the channel as well as the performance of any interface to connected protective relays and alarming if the channel/protective relay connections do not meet performance criteria" b. We believe that some of the proposed maintenance intervals for station DC supply are too stringent and that they would not produce significant increase in reliability to justify associated incremental expenditure. For example we suggest that the following changes are considered:- The interval for electrolyte level check for all batteries except VRLAs and internal measured cell/unit Ohmic value for VRLAs be extended to 6 months instead of current time period of 3 months.- The performance or service capacity test of the VRLA battery banks to be extended from 3 years to 5 years.

Response: Thank you for your comments.

1. a. This activity CAN be performed with the relays (for example, every other relay interval) if the entity so desires.
   b. The Tables have been rearranged and considerably revised to simplify and improve clarity. Please see new Table 1-5. Specific to your comment, the SDT initially specified inspection of trip-coil monitoring functions at intervals of 3 calendar months, with tripping otherwise requried annually. This has been revised to simply require tripping at 6-calendar-month intervals.
   c. The Tables have been rearranged and considerably revised to improve clarity. Please see new Table 1-5.
   d. This is an intentional difference between UFLS/UVLS and the remainder of the Protection Systems addressed within the Standard, because of the distributed nature of UFLS/UVLS and because these devices are usually tripping distribution system elements.
2. a. The Tables have been rearranged and considerably revised to improve clarity. Please see new Table 1-3.

Organization	Yes or No	Question 1 Comment
b. The Tables have been rearranged and considerably revised to improve clarity. Please see new Table 1-4.		
Arizona Public Service Company	No	The associated maintenance activities are too prescriptive. The activities needed to ensure the reliable service of the relay or device should be left up to the discretion of the utility.
Response: Thank you for your comments. The SDT disagrees. In the draft Standard, the SDT is defining the basic parameters for an effective PSMP; the entity is required to develop its program with specific activities that would satisfy those basic parameters.		
Manitoba Hydro	No	1. The monitoring attributes required to achieve level 2 monitoring of Station DC supply seem excessive. We are not aware of any other utilities doing automatic monitoring all 6 attributes required. In particular automatic monitoring of electrolyte level & battery terminal resistance does not seem practical. 2. There is inconsistency between Table 1 and the FAQ. In the Group by Monitoring Level section of the FAQ it indicates that a battery with low voltage alarm would be considered to have level 2 monitoring. 3. In Table 1C under the heading "Maximum Maintenance Interval" some of the entries are stated as being "Continuous". In the case of other maintenance activities the descriptor for Maintenance Interval indentifies the maximum period of time that may elapse before action must be taken. "Continuous" implies continuous action; however, in reality continuous monitoring enables no maintenance action to be taken until such time as trends indicate the need to do so. Therefore we recommend that where the maintenance interval be changed to read "Not Applicable".
Response: Thank you for your comments. 1. The Tables have been rearranged and considerably revised to improve clarity. Please see new Tables 1-4. 2. The FAQ has been modified. (See the examples in Section V.) **3.** The Tables have been rearranged and considerably revised to improve clarity. Please see new Tables 1-1 through 1-5.		

Organization	Yes or No	Question 1 Comment
MRO's NERC Standards Review Subcommittee (NSRS)	No	The NSRS feels additional changes are needed. 1. The functional testing requirement should be altered or removed as it increases the amount of hands-on involvement and the opportunity for human error related outages to occur, thereby introducing a greater risk to decrease system reliability. As noted on p. 8 in the supplementary reference document, "Experience has shown that keeping human hands away from equipment known to be working correctly enhances reliability." By removing circuits from service on the proposed timelines for functional testing, the chance for human error is greater than a misoperation from faulty wiring. Alternatively, entities may choose to schedule more planned outages to conduct their functional testing in order to limit the risk of unplanned outages resulting from human error. Under this scenario, more elements will be scheduled out of service on a regular basis, thereby reducing transmission system availability and weakening the system making it more challenging to withstand each subsequent contingency (N-1). Thus testing an intact system is more desirable than taking it out of service for testing. 2. While the SDT has included language in the draft standard to use fault analysis to complete maintenance obligations, in practicality, this option does not offer any relief to taking outages to perform functional tests. Nearly all BES circuit breakers are equipped with dual trip coils. Identifying which trip coil operated for a fault only covers the one trip coil. Functional tests would still be needed on the other. The likelihood of having multiple trips on a given line in the course of several years is very low. Given it can take a year to schedule some outages; planning maintenance with random faults is unpractical and will create unacceptable risk to compliance violations. A better approach is to use the basis in schedule A, but extend this to cover the entire protection schemes. The document should establish target goals for mis-operation rates (dependability and security). This would allow the utilities to develop cost effective programs to increase reliability. The utilities would have incentives to replace poorly performing communications systems; they would be able to quantify the value of upgrading relay systems.

Organization	Yes or No	Question 1 Comment
Response: Thank you for your comments. 1. The intervals and activities specified are believed by the SDT to be technically effective, in a fashion that may be consistently monitored for compliance. The entity must determine how to align these requirements with operational concerns. **2.** Operational results, if desired by an entity, MAY be used to meet maintenance requirements to the degree that it verifies, etc., the relevant performance. Whether their use is effective for a specific entity is left to the entity to determine. "Maintenance correctable issues", which may result in part from misoperations, are a part of using Attachment A to develop a performance-based PSMP.		
Tennessee Valley Authority	No	The requirement to measure internal ohmic values of the station dc supply batteries every 18 months is excessive. The interval should be 36 months. Our experience from performing our routine maintenance program including cell impedance testing at 3-year intervals has been that the program is fully adequate in monitoring bank condition.
Response: Thank you for your comments. The Tables have been rearranged and considerably revised to improve clarity. Please see new Table 1-4. The activity related to this interval is to verify various basic operating parameters. The SDT believes that extension of verification of these parameters beyond the interval within the Standard is inappropriate.		
Bonneville Power Administration	No	The requirements pertaining to dc control circuitry are confusing. 1. To start with, a definition or further explanation is required for the term "auxiliary contact". Is this strictly a breaker "a" or "b" switch, or does this include lockout relay contacts, etc.? 2. Another confusing point is that the term trip circuit is used in several places throughout the tables, but it is not included in the definition of Protection System, where the term dc control circuitry is used. It is important to use consistent terminology throughout the definition and the standard. 3. The requirements for (dc) control circuits in Table 1a are fairly straightforward, but in

Organization	Yes or No	Question 1 Comment
		Table 1b control circuits are broken down into three parts: trip coils and auxiliary relays; trip circuits; and control and trip circuitry. It is very unclear exactly what each of these three parts includes. In Table 1c, control circuitry is covered as a single element. Please provide clarity to what is included in each part of a control circuit in Table 1b and the monitoring attributes of each. Also, please be consistent in the treatment of control circuits throughout the three tables. 4. Table 1a, SPS, BPA does not understand the following segment of this paragraph "The output action may be breaker tripping, or other control action that must be verified, but may be verified in overlapping segments. A grouped output control action need be verified only once within the specified time interval." In one sentence, it says you can test a SPS in segments - and in the next sentence it says you have to verify the grouped output control action at least once within the specified time interval. It seems that the sentences contradict themselves. 5. Table 1b, Control and trip circuitry - "Monitoring of the continuity of breaker trip circuits along with the presence of tripping voltage supply all the way from relay terminals (or from inside the relay) through to the trip coil(s)..." To monitor the trip path as proposed in this Standard would cost some serious time and $$. 6. BPA does not believe there is a way to meet level two monitoring for batteries. In addition, some of the maintenance tasks need to be defined:- monitoring the electrolyte level is not commercially available.- the state of charge of each individual cell may need to be better defined. There are means to verify the state of charge of the entire bank, but not each individual cell. 7. Since a device to provide level 2 monitoring is not commercially available, we would be forced to follow level 1 maintenance guides, which would require maintenance of communication batteries every three months. Many of these batteries are not accessible during 9 months of the year except via snow-cat or helicopter. We currently monitor for some of the level 2 requirements, but not all. Our current practices of monitoring and yearly maintenance supplemented by opportunity inspections have

Organization	Yes or No	Question 1 Comment
		successfully identified problems before we lost DC power to any of our communication facilities. VRLA type batteries: - battery continuity needs to be defined. 8. In regards to the maximum allowable intervals; the frequency with which BPA performs the 18 month maintenance tasks as prescribed in the standard are on a 24 month interval along with visual inspections and voltage measurements weekly to bi-weekly. BPA has seen success with this maintenance program with the ability to identify suspect cells or entire banks with adequate time to perform corrective actions such as repairs or replacements. BPA also does not perform routine capacity testing, this is an as required maintenance task to confirm/validate our other test results if needed. Our suggestion would be to extend the maintenance intervals beyond 18 months, and to provide some clarity on the above items.

Response: Thank you for your comments.

1. The Tables have been rearranged and considerably revised to improve clarity. Please see new Table 1-5. Please see Section 15.3 of the Supplementary Reference Document and the FAQ (II4.E.).
2. The Tables have been rearranged and considerably revised to improve clarity and consistency. Please see new Table 1-5.
3. The Tables have been rearranged and considerably revised to improve clarity and consistency. Please see new Table 1-5.
4. The Tables have been rearranged and considerably revised to improve clarity and consistency. Please see new Table 1-5.
5. The Tables have been rearranged and considerably revised to improve clarity and consistency. Please see new Table 1-5.
6. The Tables have been rearranged and considerably revised to improve clarity. Please see new Table 1-4. Also, the SDT believes that there are devices available to monitor electrolyte levels.
7. The FAQ (II.5.K) advises that “communications system batteries” are not “station batteries” and are maintained with the communications systems.
8. The activity related to this interval is to verify various basic operating parameters. The SDT believes that extension of verification of these parameters beyond the interval within the Standard is inappropriate.

Organization	Yes or No	Question 1 Comment
Public Service Enterprise Group ("PSEG Companies")	No	The SDT is to be commended for the work and details included in the most recent draft revision. The standard - with associated references is easier to interpret. 1. The sections on DC supply are too restrictive. Quartile checks of VLA electrolyte levels for unmonitored systems is reasonable, however the option of checking the electrolyte levels and voltages with less frequency is not an option with systems that have voltage alarm notification and ground detection monitoring alarm notification unless all level 2 attributes are followed. The level 2 monitoring attributes are too comprehensive to allow for a suggested alternative less restrictive interval of 6 months to a year. Suggest there be an additional option for level 2 monitoring that includes voltage level and ground alarms with a 6 month maintenance activity interval. 2. The perception of table 1a page 12 for station DC supply - “used for UVLS and UFLS” is a maintenance activity to verify proper DC supply voltage when the UVLS and UFLS system is maintained. This is the only DC supply maintenance activity for those applications and the other more rigorous maintenance activities do not apply? If this is a correct interpretation specifically list that as such in the maintenance activity description (State the other DC supply maintenance activities are not applicable for UVLS and UFLS). The maintenance intervals for station DC supply for level 1 and 2 monitoring does not appear to be consistent and is somewhat confusing. A battery system with level 2 monitoring attributes for components has intervals of 6 years, and then in next section states that no level 2 attributes are defined - use level 1 maintenance activities. Suggest that all DC supply / batteries be broken out all be included in one separate - stand alone table with varied maintenance requirements based on monitoring attributes. 3. The maintenance activities shown on table 1b on page 19 for Station DC supply is intended for VLA batteries? If so add that in component definition. 4. For DC systems that use a storage battery, suggest that chargers be eliminated as other required maintenance activities will expose any problems with the charger. 5. The requirements of performing a capacity test every 6 years during the initial service

Organization	Yes or No	Question 1 Comment
		life of a VLA battery in addition to the other maintenance activities are too restrictive and will cause extensive outages of the affected equipment. Suggest that this frequency be extended to 10 years for VLA batteries for the first iteration if all the other maintenance activities are followed. Failure rate of VLA in first 10 years is extremely low. Other maintenance activities will expose significant issues.
Response: Thank you for your comments. 1. The Tables have been rearranged and considerably revised to improve clarity. Please see new Table 1-4. 2. The Tables have been rearranged and considerably revised to improve clarity. Please see new Table 1-4. 3. The Tables have been rearranged and considerably revised to improve clarity. Please see new Table 1-4. 4. If the charger fails, the battery will quickly discharge via normal dc loads, and be unable to adequately serve the Protection System. **5.** The SDT disagrees, and believes that a capacity test at 6-year intervals is appropiate for Vented Lead Acid batteries.		
US Bureau of Reclamation	No	1. There is no reliability based justification to alter the standards to include allowable intervals. 2. The intervals prescription for performance based PSMP virtually eliminates the capability of smaller utilities who do not have a large equipment database to justify a performance based system that may be sound based on their experience. This overly prescriptive approach should be eliminated and return to allowing utilities to justify their programs. The standard should return to addressing real reliability impacts as required by law. This would be to develop a maintenance required which identifies that if it is shown that an event in which reliability is impacted by the utilities PSMP, as evidenced by disturbance reports, the utility would be required to submit to the RRO a corrective action plan which addresses how the PSMP will be revised and when compliance with that PSMP is to be achieved. 3. Finally, the standard presumes that components within a BES Element will cause a reliability impact to the BES. In numerous meeting with NERC and WECC it was

Organization	Yes or No	Question 1 Comment
		emphasized that a reliability impact has been described as causing cascading outages or causing loss of service to load above a certain magnitude. The BES has an ability to absorb element outages resulting from a variety of causes without impact load or resulting in cascading outages.
Response: Thank you for your comments. 1. FERC Order 693 directs NERC to establish maximum allowable intervals. 2. Small entities are permitted to aggregate their components with similar components of other entities to meet the component populations, as long as the programs are (and remain) similar – see Section 9 of the Supplementary Reference, the FAQ (IV.3.A) and the associated footnote to Attachment A. Decreasing the component population below the requirements of Attachment A will result in an unsound program due to component populations that are not statistically significant. **3.** The SDT believes that Protection Systems that trip (or can trip) the BES should be included. This position is consistent with the currently-approved PRC-005-1, consistent with the SAR for Project 2007-17, and understands this to be consistent with the position of FERC staff.		
Dynegy Inc.	No	We agree with all proposed intervals in Tables 1a, 1b, and 1c except the 3 calendar month interval for Associated Communication Systems in Table 1a. We suggest using a 1 year interval because all other elements of the Protection System are being verified a minimum of every 3 years. Therefore, we believe annual verification of Associated Communication Systems is sufficient.
Response: Thank you for your comments. The SDT believes that the 3-month interval is proper for unmonitored communications systems.		
Pacific Northwest Small Public Power Utility Comment Group	No	We agree with most of the changes from the last draft. However, the phrase “Verify Battery cell-to-cell connection resistance” has entered the table where it did not exist before. On some types of stationary battery units, this internal connection is inaccessible. On other types the connections are accessible, but there is no way to repair them based on a bad reading. And bad cell-to-cell connections within units will be detected by the other required

Organization	Yes or No	Question 1 Comment
		tests. This requirement will cause entities to scrap perfectly good batteries just so this test can be performed, with no corresponding increase in bulk electric system reliability while taking an unnecessary risk to personnel and the environment. And because buying battery units composed of multiple cells allows space saving designs, entities may be forced to buy smaller capacity batteries to fit existing spaces. This may end up having a negative effect on reliability. Suggest substituting “unit-to-unit” wherever “cell-to-cell” is used in the table now.
Response: Thank you for your comments. The Tables have been rearranged and considerably revised to improve clarity. Please see new Table 1-4. This element of the table has been modified to state, “Battery internal cell-to-cell or unit-to-unit connection resistance (where available to measure)” to address this comment.		
PNGC Power	No	We agree with most of the changes from the last draft. However, the phrase “Verify Battery cell-to-cell connection resistance” has entered the table where it did not exist before. On some types of stationary battery units, this internal connection is inaccessible. On other types the connections are accessible, but there is no way to repair them based on a bad reading. And bad cell-to-cell connections within units will be detected by the other required tests. This requirement will cause entities to scrap perfectly good batteries just so this test can be performed, with no corresponding increase in bulk electric system reliability while taking an unnecessary risk to personnel and the environment. And because buying battery units composed of multiple cells allows space saving designs, entities may be forced to buy smaller capacity batteries to fit existing spaces. This may end up having a negative effect on reliability. Suggest substituting “unit-to-unit” wherever “cell-to-cell” is used in the table now.
Response: Thank you for your comments. The Tables have been rearranged and considerably revised to improve clarity. Please see new Table 1-4. This element of the table has been modified to state, “Battery internal cell-to-cell or unit-to-unit connection resistance (where available to measure)” to address this comment.		
FirstEnergy	No	We support most of the maintenance activities detailed in the Tables, but question the

Organization	Yes or No	Question 1 Comment
		verification of battery cell-to-cell resistance. On some types of battery units, this internal connection is inaccessible. We suggest substituting "unit-to-unit" in place of "cell-to-cell".
Response: Thank you for your comments. The Tables have been rearranged and considerably revised to improve clarity. Please see new Table 1-4. This element of the table has been modified to state, "Battery internal cell-to-cell or unit-to-unit connection resistance (where available to measure)" to address this comment.		
Florida Municipal Power Agency	No	1. Will the Standard Introduce Technical Feasibility Exceptions to PRC Standards? A large proportion of the batteries (as high as 50% as reported by some SMEs) are not able to accommodate all of the tests prescribed in the draft standard. The phrase "Verify Battery cell-to-cell connection resistance" has entered the table where it did not exist before. On some types of stationary battery units, this internal connection is inaccessible. On other types the connections are accessible, but there is no way to repair them based on a bad reading. And bad cell-to-cell connections within units will be detected by the other required tests. This requirement will cause entities to scrap perfectly good batteries just so this test can be performed, with no corresponding increase in bulk electric system reliability while taking an unnecessary risk to personnel and the environment. And because buying battery units composed of multiple cells allows space saving designs, entities may be forced to buy smaller capacity batteries to fit existing spaces. This may end up having a negative effect on reliability. Suggest substituting "unit-to-unit" wherever "cell-to-cell" is used in the table now. 2. The Standard Reaches Beyond the Statutory Scope of the Reliability Standards As written, the standard requires testing of batteries, DC control circuits, etc., of distribution level protection components associated with UFLS and UVLS. UFLS and UVLS are different than protection systems used to clear a fault from the BES. An uncleared fault on the BES can have an Adverse Reliability Impact and hence; the focus on making sure the fault is cleared is important and appropriate. However, a UFLs or UVLS event happens after the fault is cleared and is an inexact science of trying to automatically restore supply and demand balance (UFLS) or restore voltages (UVLS) to acceptable

Organization	Yes or No	Question 1 Comment
		levels. If a few UFLS or UVLS relays fail to operate out of potentially thousands of relays with the same function, there is no significant impact to the function of UFLS or UVLS. Hence, there is no corresponding need to focus on every little aspect of the UFLS or UVLS systems. Therefore, the only component of UFLS or UVLS that ought to be focused on in the new PRF-005 standard is the UFLS or UVLS relay itself and not distribution class equipment such as batteries, DC control circuitry, etc., and these latter ought to be removed from the standard. In addition, most distribution circuit are radial without substation arrangements that would allow functional testing without putting customers out of service while the testing was underway, or at least without momentary outages while customers were switched from one circuit to another. Therefore, as written, we would be sacrificing customer service for a negligible impact on BES reliability.
Response: Thank you for your comments. 1. The Tables have been rearranged and considerably revised to improve clarity. Please see new Table 1-4. This element of the table has been modified to state, “Battery internal cell-to-cell or unit-to-unit connection resistance (where available to measure)” to address this comment. **2.** The Standard addresses UFLS and UVLS to the degree that they are installed per NERC Standards, even though entities may choose to install them on distribution systems.		
NERC Staff	Yes	
PacifiCorp	Yes	
WECC	Yes	Compliance agrees with the changes as they add clarity though the Tables do not define what is actually required to demonstrate compliance without reading the Supplementary Reference and the FAQs.
Response: Thank you for your comments. The Measures do provide discussion of what is required to demonstrate compliance.		

Organization	Yes or No	Question 1 Comment
The United Illuminating Company	Yes	In general yes. There are concerns with verifying cell-to-cell resistance in Batteries. On some battery sets this is not possible to do.
Response: Thank you for your comments. This element of the table has been modified to state, "Battery internal cell-to-cell or unit-to-unit connection resistance (where available to measure)" to address this comment.		
South Carolina Electric and Gas	Yes	Please provide clarity on why Table 1b for "Station dc supply" has a double entry that appears to be contradictory. The table provides monitoring attributes for a maximum maintenance interval of 6 calendar years and the next row says to refer to level 1 maintenance activities.
Response: Thank you for your comments. The Tables have been rearranged and considerably revised to improve clarity. Please see new Table 1-4.		
ReliabilityFirst Corp.	Yes	1. The SDT has made significant and worthwhile changes to these tables. However, these tables still seem overly complex and should be simplified. One possibility would be to eliminate Table 1c and use Table 1b for those components that meet certain monitoring attributes. 2. There are some errors in Table 1a in rows 5 and 6. In row 5 in the component column the word "contact" is missing. In the same row in the third column, there is an extra period. In row 6 in the third column, "circuit" should be "circuits" as in the other rows. 3. The maintenance intervals seem to give preference to solid-state outputs but there is no evidence given that these are truly more reliable than an electromechanical trip at least not sufficient to double the maintenance interval.
Response: Thank you for your comments. 1. The Tables have been rearranged and considerably revised to improve clarity. Please see new Tables 1-1 through 1-5.		

Organization	Yes or No	Question 1 Comment
2. The Tables have been rearranged and considerably revised to improve clarity. Please see new Tables 1-1 through 1-5.		
3. The Tables have been rearranged and considerably revised to improve clarity. Please see new Tables 1-1.		

2. **The SDT has included VRFs and Time Horizons with this posting. Do you agree with the assignments that have been made? If not, please provide specific suggestions for improvement.**

Summary Consideration: Many commenters disagreed with various VRFs as specified in the draft Standard. The SDT has reconsidered the VRFs in accordance with the guidance provided by NERC and FERC, and the Standard has been modified to assign the VRFs as R1 – Medium, R2 – Medium, R3 – Medium, and R4 – High. Some comments were offered regarding Time Horizons, resulting in modification of the Time Horizons for both R3 and R4 from Long-Term Planning to Operations Planning.

Organization	Yes or No	Question 2 Comment
PPL Supply		No comment.
Xcel Energy		No comments
SERC Protection and Control Sub-committee (PCS)		The SERC PCS expresses no opinion on this question.
San Diego Gas & Electric	No	
The Detroit Edison Company	No	
Black Hills Power	No	
The United Illuminating Company	No	The VRF for R1 should be Low. It is administrative to create an inventory list. If R1 failed to be executed but the other requirements wee executed fully then the BES would be

Organization	Yes or No	Question 2 Comment
		properly secured. Compare this against the scenario of performing R1 but failing to perform the other tasks; in which case the BES is at risk. UI recognizes that the SDT considers the inventory as the foundation of the PSMP but it is not the element of the PSMP that provides for the level of reliability sought. R1 should be VRF Low and R2 thru R4 VRF is Medium. UI agrees with the Time Horizon.
Response: Thank you for your comments. The SDT has reconsidered the VRFs in accordance with the guidance provided by NERC and FERC, and the Standard has been modified to assign the VRFs as R1 – Medium, R2 – Medium, R3 – Medium, and R4 – High.		
JEA	No	1. What role with the Supplementary Reference and FAQ play with reference to the proposed standard? We have a concern that the standard will stand-alone and not include the interpretations, examples and explanations that are needed to properly apply these values in a compliance environment. There needs to be a method to include the FAQ and Supplementary Reference. 2. The method will also need to allow for future modifications as the standard is revised, etc.
Response: Thank you for your comments. 1. The Supplementary Reference and FAQ documents provide supporting discussion, but are not part of the Standard. The SDT intends that these be posted as reference documents, accompanying the Standard. **2.** The SDT intends that these documents be updated as the Standard is revised, such that they continue to be relevant to the application of the Standard.		
FirstEnergy	No	Although we agree that Requirement 1 is important because it establishes a sound PSMP, a HIGH VRF assignment is not appropriate and it should be changed to LOWER. By definition, a requirement with a LOWER VRF is administrative in nature, and documentation of a program is administrative. Assigning a LOWER VRF to R1 is more logical since R4, which is the requirement to implement the PSMP, is assigned a MEDIUM VRF because, if violated, it could directly affect the electrical state or the capability of the bulk electric

Organization	Yes or No	Question 2 Comment
		system. Additionally, revising the VRF to LOWER would provide a consistent assignment to a VRF on a similar requirement in the proposed FAC-003-2 standard.
Response: Thank you for your comments. The SDT has reconsidered the VRFs in accordance with the guidance provided by NERC and FERC, and the Standard has been modified to assign the VRFs as R1 – Medium, R2 – Medium, R3 – Medium, and R4 – High. For a VRF to be classified as "Lower" it must be administrative, and none of the requirements in this standard are 'administrative'.		
Pepco Holdings, Inc. - Affiliates	No	An explanation is needed to justify why the VRF for R1 of the PSMP is High whereas the implementing and following of the PSMP is Medium, R2, R3 & R4.
Response: Thank you for your comments. The SDT has reconsidered the VRFs in accordance with the guidance provided by NERC and FERC, and the Standard has been modified to assign the VRFs as R1 – Medium, R2 – Medium, R3 – Medium, and R4 – High.		
American Transmission Company	No	ATC disagrees with the VRFs as specified in the standard. R1 VRF would more likely be classified as "medium" and R2 through R4 should be classified as a "High" VRF. ATC is O.K. with the Time Horizons specified.
Response: Thank you for your comments. The SDT has reconsidered the VRFs in accordance with the guidance provided by NERC and FERC, and the Standard has been modified to assign the VRFs as R1 – Medium, R2 – Medium, R3 – Medium, and R4 – High.		
Constellation Power Generation	No	Constellation Power Generation questions why the VRF for R1 is High while all other requirements are Medium. This VRF should be changed to Medium to follow suit with the other requirements.
Response: Thank you for your comments. The SDT has reconsidered the VRFs in accordance with the guidance provided by NERC and FERC, and the Standard has been modified to assign the VRFs as R1 – Medium, R2 – Medium, R3 – Medium, and R4 – High.		
Florida Municipal Power Agency	No	R1, R2 and R3 are administrative in nature and ought to be a Low VRF, not a High or Medium VRF. R4 is doing the actual maintenance and testing and ought to be the highest VRF in the standard. Medium VRF is appropriate for R4.

Organization	Yes or No	Question 2 Comment
Response: Thank you for your comments. The SDT has reconsidered the VRFs in accordance with the guidance provided by NERC and FERC, and the Standard has been modified to assign the VRFs as R1 – Medium, R2 – Medium, R3 – Medium, and R4 – High.		
ReliabilityFirst Corp.	No	R4 is the implementation of a maintenance program which is extremely important. Effective operation of the BES is so dependent on adequate maintenance that requirement R4 warrants a High VRF. It seems that requirement R3 may actually be better categorized as having an Operations Assessment Time Horizon as the entity needs to review events to analyze the adequacy of maintenance periods.
Response: Thank you for your comments. The SDT has reconsidered the VRFs in accordance with the guidance provided by NERC and FERC, and the Standard has been modified to assign the VRFs as R1 – Medium, R2 – Medium, R3 – Medium, and R4 – High. The SDT agrees with the suggestion to change the R3 Time Horizon and has assigned an Operations Planning Time Horizon.		
BGE	No	See comments under 7 regarding the ambiguity of R1.1. A high VRF for some interpretations of R1.1 may not be reasonable. A program may be structured so that sufficient maintenance to ensure reliability is taking place even though a specific component is not identified. Contrasting the high VRF for R1 with the medium VRF for R4 seems backwards.
Response: Thank you for your comments. The SDT has reconsidered the VRFs in accordance with the guidance provided by NERC and FERC, and the Standard has been modified to assign the VRFs as R1 – Medium, R2 – Medium, R3 – Medium, and R4 – High.		
MRO's NERC Standards Review Subcommittee (NSRS)	No	The NSRS disagrees with the VRFs as specified in the standard. R1 VRF would more likely be classified as "medium" and R2 through R4 should be classified as a "High" VRF.
Response: Thank you for your comments. The SDT has reconsidered the VRFs in accordance with the guidance provided by NERC and FERC, and the Standard has been modified to assign the VRFs as R1 – Medium, R2 – Medium, R3 – Medium, and R4 – High.		

Organization	Yes or No	Question 2 Comment
US Bureau of Reclamation	No	The Time Horizons are too narrow for the implementation of the standard as written. The SDT appears to have not accounted for the data analysis associated with performance based systems. The data collection, analysis, and subsequent decisions associated development of a maintenance program and its justification do not occur overnight especially with larger utilities. In addition, this new standard will require complete rewrite of maintenance programs. The internal processes associated with these vary based on the size of the utility. Since this standard is so invasive into the internal decisions concerning maintenance, the standard should allow at least 18 months for entities to rewrite their internal maintenance programs to meet the requirements and 18 months to train the staff and implement the new program.
Response: Thank you for your comments. The SDT has reviewed the time horizons, and feels that R1 and R2 are properly assigned a Long-Term Planning Time Horizon, as the activities to develop a program and to determine the monitoring attributes of components are performed within the related time period. The SDT has assigned an Operations Planning Time Horizon to R3 and R4, as some of the related activities must take place within 1-year intervals.		
Ameren	No	The VRF for R1 should be Medium because the failure to do so is commensurate with the risks of the other requirements. For example, failing to establish a PSMP for some portion of the entity's components could lead to their maintenance not meeting this standard; this is the same is establishing the PSMP and then not performing the maintenance per the standard.
Response: Thank you for your comments. The SDT has reconsidered the VRFs in accordance with the guidance provided by NERC and FERC, and the Standard has been modified to assign the VRFs as R1 – Medium, R2 – Medium, R3 – Medium, and R4 – High.		
Indeck Energy Services	No	The VRF's are highly arbitrary because they treat all registered entities and all protective systems alike. They're not. For example, under-frequency relays for generators protect the equipment needed to restore the system after a blackout. The under-frequency load relays prevent a cascading outage. As discussed at the FERC Technical Conference on Standards Development, the goal of the standards program is to avoid or prevent

Organization	Yes or No	Question 2 Comment
		cascading outages--specifically not loss of load. That would make under-frequency load relays more important to prevent cascading outages.
Response: Thank you for your comments. The SDT has reconsidered the VRFs in accordance with the guidance provided by NERC and FERC, and the Standard has been modified to assign the VRFs as R1 – Medium, R2 – Medium, R3 – Medium, and R4 – High. The risk to the system is independent of entity size. VSLs have been modified where necessary to make them independent of size of entity.		
Springfield Utility Board	No	1. Time horizons for implementation seem adequate and SUB appreciates the attention to putting together a reasonable but assertive implementation plan. 2. The Violation Risk Factors are problematic. With all due respect, it seems that NERC still operates in a "BIG UTILITY" mind set. There are "PROTECTION SYSTEMS" and there are "Protection Systems" - some Protection Systems may significantly impact system reliability and others may not. This not promote reliability in that if an entity was thinking about installing a minor system or installing an improvement that enhances reliability (but is not required) that it might back away because of the risk associated with somehow being out of compliance. Reliability runs the risk of being diminished through the standards approach. SUB suggests stepping back and putting more granularity on VRFs and there needs to be more perspective on the purpose of the device when arriving at a risk factor. Perhaps a voltage threshold could be attached to the VRFs. For example language could be added to say "For Elements at 200kV and above, or for Critical Assets, the risk factor is higher" and "For Elements operating at 100kV and above, the risk factor is medium" and "For Elements below 100kV, the risk factor is lower" In SUB's view, a discussion on VRF's needs to coupled with Violation Severity Levels. SUB discusses VRF's later in this comment form. SUB would be supportive of a Medium VRF designation if there were a more balanced VLF structure (please refer to the comments of VLFs)
Response: Thank you for your comments. The SDT has reconsidered the VRFs in accordance with the guidance provided by NERC and FERC, and the Standard has been modified to assign the VRFs as R1 – Medium, R2 – Medium, R3 – Medium, and R4 – High.		

Organization	Yes or No	Question 2 Comment
According to the current Reliability Standards Development Procedure, each Requirement is assigned one (and only one) VRF.		
Manitoba Hydro	No	Time horizons to change from present 6 months to 3 months maintenance time intervals within proposed implementation time period is not realistic.
Response: Thank you for your comments. The options for Time Horizon are Long-Term Planning, Operations Planning, Same-Day Operations, Real-Time Operations, and Operations Assessment. The SDT has reviewed the Time Horizons, and feels that R1 and R2 are properly assigned a Long-Term Planning time horizon, as the activities to develop a program and to determine the monitoring attributes of components is performed within the related time period. The SDT has assigned an Operations Planning Time Horizon to R3 and R4, as some of the related activities must take place within 1-year intervals.		
American Electric Power	Yes	
Arizona Public Service Company	Yes	
Bonneville Power Administration	Yes	
Consumers Energy Company	Yes	
Duke Energy	Yes	
Dynegy Inc.	Yes	
Entergy Services	Yes	
Exelon	Yes	

Organization	Yes or No	Question 2 Comment
Great River Energy	Yes	
Hydro One Networks	Yes	
Long Island Power Authority	Yes	
MEAG Power	Yes	
MidAmerican Energy Company	Yes	
Northeast Power Coordinating Council	Yes	
Northeast Utilities	Yes	
Pacific Northwest Small Public Power Utility Comment Group	Yes	
PNGC Power	Yes	
Progress Energy Carolinas	Yes	
Public Service Enterprise Group ("PSEG Companies")	Yes	

Organization	Yes or No	Question 2 Comment
Santee Cooper	Yes	
South Carolina Electric and Gas	Yes	
Southern Company Transmission	Yes	
Tennessee Valley Authority	Yes	
We Energies	Yes	
Western Area Power Administration	Yes	
Y-W Electric Association, Inc.	Yes	
PacifiCorp	Yes	Agree with the exception that the time horizon for implementation needs to recognize that documentation for maintenance tasks performed prior to this standard may not match current requirements and there should be no penalty for this.
Response: Thank you for your comments. The Implementation Plan needs to address the concerns expressed.		
Nebraska Public Power District	Yes	Please provide an example of how the compliance percentage will be calculated for the implementation plan.
Response: Thank you for your comments. The SDT does not understand how this comment relates to the VRFs or to the Time Horizons.		

3. The SDT has included Measures and Data Retention with this posting. Do you agree with the assignments that have been made? If not, please provide specific suggestions for improvement.

Summary Consideration: Many commenters expressed concern about the data retention requirements for two full maintenance intervals, and the SDT responded that this is consistent with today's expectations of many Compliance Monitors. Other commenters were concerned about data retention over the transition from PRC-005-1 to two full maintenance intervals for PRC-005-2, and the SDT offered advice that, until two maintenance cycles have been experienced under PRC-005-2, the program and associated documentation for PRC-005-1 will still be relevant.

Comments were offered that "on-site" audits as expressed in the Data Retention Section (item 1.3 under Compliance) are not relevant for small entities which are not audited on-site; the SDT agrees and changed the term to "scheduled" audits.

Several commenters offered suggestions relative to the Measures, resulting in changes to all four Measures. The SDT removed the detailed Protection System definition from Measure M1, inserted "Distribution Provider" in Measure M2, and made changes to consistently use "shall" rather than "will" or "should" throughout all the Measures.

Organization	Yes or No	Question 3 Comment
WECC		1. Compliance agrees with the measures. 2. Compliance recommends making the Supplementary Reference part of the standard and that it be referenced appropriately in Table 1a, 1b, 1c and Attachment A. 3. Compliance does not agree with the Data Retention as provided in the draft. In order for an entity to demonstrate that they have maintained system protection elements within their defined intervals retention of documentation will be required for many years.

Organization	Yes or No	Question 3 Comment
		This is in order to establish bookends for the maintenance interval. Maintenance intervals commonly span 5 years or more. Entities should be required to retain data for the entire period of the maintenance interval. Data Retention should be changed to: The Transmission Owner and any Distribution Provider that owns a transmission Protection System and each Generation Owner that owns a generation Protection System, shall retain evidence of the implementation of its Protection System maintenance and testing program for a minimum of the duration of one maintenance interval as defined in the maintenance and testing program.
Response: Thank you for your comments. 1. Thank you. 2. This document provides supporting discussion, but is not part of the Standard. The SDT intends that it be posted as a Reference Document, accompanying the Standard. As established in SDT Guidelines, the Standard is to be a terse statement of requirements, etc, and is not to include explanatory information like that included in the Supplementary Reference Document. **3.** The SDT believes that the modification suggested in the comment is not sufficient to demonstrate compliance. In order that a Compliance Monitor can be assured of compliance, the SDT believes that the Compliance Monitor will need the data of the most recent performance of the maintenance, as well as the data of the preceding one. The SDT has specified the data retention in the posted Standard to establish this level of documentation.		
Xcel Energy		No comments
San Diego Gas & Electric	No	
The Detroit Edison Company	No	
Ameren	No	1) M2 incorrectly excludes Distribution Provider. 2) For those components with numerous cycles between on-site audits, retaining and

Organization	Yes or No	Question 3 Comment
		providing evidence of the two most recent distinct maintenance performances and the date of the others should be sufficient. If an entity misses a required maintenance, that results in a self report. We are subject to spot audits and inquiries at any time between on-site audits as well. 3) For those components with cycles exceeding on-site audit interval, retaining and providing evidence of the most recent distinct maintenance performance and the date of the preceding one should be sufficient. Auditors will have reviewed the preceding maintenance record. Retaining these additional records consumes resources with no reliability gain. 4) FAQ II 2B final sentence states that documentation for replaced equipment must be retained to prove the interval of its maintenance. We oppose this because: the replaced equipment is gone and has no impact on BES reliability; and such retention clutters the data base and could cause confusion. For example, it could result in saving lead acid battery load test data beyond the life of its replacement.
Response: Thank you for your comments. 1. Distribution Provider has been added to Measure M2. 2. The SDT understands that Compliance Monitors will usually wish to review data to review program performance back to the preceding on-site audit. **3.** The SDT believes that the Compliance Monitor will need the data of the most recent performance of the maintenance, as well as the data of the preceding one. The SDT has specified the data retention in the posted Standard to establish this level of documentation. The SDT understands that Compliance Monitors are currenlty requesting data on retired components to validate that entities have been in compliance since the last audit (or currently, since the beginning of mandatory compliance), and believes that this suggestion in the FAQ is appropriate.		
Northeast Power Coordinating Council	No	1. Clarification is needed for “on-site audit” - does it include audits by any of the following - NPCC/NERC/FERC. Several small entities do not have on-site audits and participate in

Organization	Yes or No	Question 3 Comment
		off-site audits. Hence, suggest deleting "on-site" from the requirement. 2. Further clarification is required to the Data Retention section to coordinate with the statement in FAQ (Section IV.d p. 22 redline). Suggest the following revised Data Retention requirement consistent with the statement and example given in FAQ:"The Transmission Owner, Generator Owner, and Distribution Provider shall each retain at least two maintenance test records or statistical data to demonstrate compliance with test interval required for each distinct maintenance activity for the Protection System components. The Compliance Enforcement Authority shall keep the last periodic audit report and all requested and submitted subsequent compliance records."
Response: Thank you for your comments. 1. We have modified "on-site" to "scheduled" to address this comment. **2.** The SDT was unable to locate the discussion from the comment within the FAQ.		
Constellation Power Generation	No	Constellation Power Generation does not agree with the proposed data retention section. Retaining and providing evidence of the two most recent performances of each distinct maintenance activity should be sufficient. For entities that have not been audited since June of 2007, having to retain evidence from that date to the date of an audit could contain numerous cycles, which is cumbersome and does not improve the reliability of the BES.
Response: Thank you for your comments. For shorter-interval activities (such as those with quarterly intervals), the SDT understands that Compliance Monitors are currently requesting data to validate that entities have been in compliance since the last audit (or currently, since the beginning of mandatory compliance) or for the duration specified in a standard.		
JEA	No	Data retention becomes a complex issue for maintenance intervals of 12 years where the last two test intervals are required to be kept, i.e. 24 years. It would seem much more reasonable to set a limit of two test intervals or the last regional audit, not having to keep some 24 years of documentation with maintenance systems changing and archival records

Organization	Yes or No	Question 3 Comment
		somewhat problematic to keep.
Response: Thank you for your comments. In order that a Compliance Monitor can be assured of compliance, the SDT believes that the Compliance Monitor will need the data of the most recent performance of the maintenance, as well as the data of the preceding one. The SDT has specified the data retention in the posted standard to establish this level of documentation.		
Public Service Enterprise Group ("PSEG Companies")	No	Data retention for battery capacity test should be most recent performance, not last 2. The other maintenance activities documentation with one iteration of capacity test is sufficient documentation
Response: Thank you for your comments. In order that a Compliance Monitor can be assured of compliance, the SDT believes that the Compliance Monitor will need the data of the most recent performance of the maintenance, as well as the data of the preceding one, as well as data to validate that entities have been in compliance since the last audit (or currently, since the beginning of mandatory compliance). The SDT has specified the data retention in the posted Standard to establish this level of documentation.		
PacifiCorp	No	Data retention requirements need to be modified. The need to maintain records of two previous tasks is excessive, one should be adequate. Per the two previous task requirements an entity may need to maintain records for 35 years.
Response: Thank you for your comments. In order that a Compliance Monitor can be assured of compliance, the SDT believes that the Compliance Monitor will need the data of the most recent performance of the maintenance, as well as the data of the preceding one, as well as data to validate that entities have been in compliance since the last audit (or currently, since the beginning of mandatory compliance). The SDT has specified the data retention in the posted Standard to establish this level of documentation.		
Progress Energy Carolinas	No	M2 incorrectly excludes Distribution Provider.
Response: Thank you for your comments. Measure M2 has been modified to add “Distribution Provider.”		
Duke Energy	No	M4 states that entities shall have evidence such as maintenance records or maintenance summaries (including dates that the components were maintained). We would like to see

Organization	Yes or No	Question 3 Comment
		M4 revised/expanded to explicitly include the FAQ Section IV 1.B information which states that forms of evidence that are acceptable include, but are not limited to: o Process documents or plans o Data (such as relay settings sheets, photos, SCADA, and test records) o Database screen shots that demonstrate compliance information o Diagrams, engineering prints, schematics, maintenance and testing records, etc. o Logs (operator, substation, and other types of log) o Inspection forms o U.S. or Canadian mail, memos, or email proving the required information was exchanged, coordinated, submitted or received o Database lists and records o Check-off forms (paper or electronic) o Any record that demonstrates that the maintenance activity was known and accounted for.
Response: Thank you for your comments. The Standard Development Procedure requires that Measures provide some examples of evidence, but does not require an exhaustive list. The SDT did add “check-off lists” and “inspection records.”		
Indeck Energy Services	No	Measure 1 is complete overkill for a small generating facility. The maintenance program is to inspect and test the equipment within the intervals. A qualified contractor applies industry standard methods to maintain the equipment. Trying to have each entity define the maintenance program down to the component level does not improve reliability.
Response: Thank you for your comments. A definition of “Component” has been added to the draft PRC-005-2 Standard to help explain how “component” can be characterized.		

Organization	Yes or No	Question 3 Comment
PPL Supply	No	1. Measurers M1 - requires having a maintenance program that addresses control circuitry associated with protective functions from the station dc supply through the trip coil(s) of the circuit breakers. Some generators do not own this equipment to the circuit breaker or other interrupting devices. The requirement should be to maintain and test the equipment owned by the generator. 2. Data Retention 1.3 references on-site audits. Entities registered as GO and GOP are not audited on-site.
Response: Thank you for your comments. 1. The SDT believes that "its Protection Systems" in Requirement R1 is synonymous with "Protection Systems that it owns" and declines to modify the Standard to address this comment. **2.** We have modified "on-site" to "scheduled" to address this comment.		
Arizona Public Service Company	No	The change to the Protection System definition and establishing a PSMP with prescriptive maintenance activities relative to the voltage and current sensing devices has created a situation where data from original or prior verification not being available or not at the interval to meet the data retention requirement. Although, methods of determining the integrity of the voltage and current inputs into the relays were used to ensure reliability of the devices meets the utilities requirements, they may not meet the interval requirement and would then be considered a violation due to changes in the standard. Recommend a single exemption of the two recent most recent performances of maintenance activities to the most recent performance of maintenance activity in the first maintenance interval for this component due to the long maintenance interval, the changes in the standard definitions and the prescriptive maintenance activities.
Response: Thank you for your comments. The SDT believes that Compliance Monitors will assess compliance for activities performed before the effective date of this Standard using the program that you had in place previously.		

Organization	Yes or No	Question 3 Comment
American Electric Power	No	1. The measure includes the entire definition of "Protection System". Remove the definition from the measure and let the definition stand alone in the NERC glossary. 2. 1.3 Data Retention This calls for past 2 distinct maintenance records to be kept. Since UFLS interval can be 12 years, this would mean that we would need to keep records for 24 years. This is not realistic and consideration should be given to choosing a reasonable retention threshold.
Response: Thank you for your comments. 1. Measure M2 has been modified as suggested. **2.** In order that a Compliance Monitor can be assured of compliance, the SDT believes that the Compliance Monitor will need the data of the most recent performance of the maintenance, as well as the data of the preceding one, as well as data to validate that entities have been in compliance since the last audit (or currently, since the beginning of mandatory compliance). The SDT has specified the data retention in the posted Standard to establish this level of documentation.		
Springfield Utility Board	No	The measures do not seem unreasonable. However the data retention states that documentation must exist for the two most recent performances of each maintenance activity. Stepping back, there is an implementation schedule that is designed to bring all devices into compliance with ONE maintenance or test within (SUB's understanding is) 6 years. There may not be documentation for more than one activity. Further, new or replacement components won't have more than one activity for a number of years. The data retention schedule, left unchanged, will promote non-compliance because it is impossible to have two records when only one may possibly exist. Rather than promote a culture of compliance, the standard promotes a culture of non-compliance by creating an standard that cannot be met. The FAQ addresses this issue, but the Data Retention language seems to be less clear. SUB suggests that the Data Retention language be clear that new components that do not replace existing components may have only one record for maintenance if only one maintenance of the component could possibly exist. SUB suggests that the Data Retention language also be clear that for new components that

Organization	Yes or No	Question 3 Comment
		replace existing components, that the Data Retention requirement reflect that the entity needs to retain the last test for the pre-existing component and the test for the new component (for a total of two tests).
Response: Thank you for your comments. First of all, the Data Retention presumes a stable Standard that has been in effect. Further, the SDT believes that Compliance Monitors will assess compliance for activities performed before the effective date of this Standard using the program that you had in place previously. Therefore, the documentation for your program under PRC-005-1 (whatever it may have been) will serve as your "second interval" documentation until supplanted by new PRC-005-2 records.		
US Bureau of Reclamation	No	The measures M2, M3, and M4 are redundant to measure M1. Either eliminate M1 or M2 through M4. The entity must provide documentation of its maintenance program in M1 irrespective of the type used. As previously mentioned there is not reliability based justification for the documentation required. The Entity should be afforded the freedom to make intelligent maintenance choices based on innumerable factors. These choices will be reviewed if a reliability impact is determined to be related to the choices.
Response: Thank you for your comments. The NERC Reliability Standard Development Procedure establishes that each individual requirement will have its own Measure. Additionally, the four Measures are NOT redundant – Measure M1 addresses "having a program," Measure M2 addresses "monitoring attributes to use extended intervals in the Tables," Measure M3 addresses "criteria for a performance-based program," and Measure M4 addresses "implementation of the program."		
American Transmission Company	No	The NERC standard assigns a retention period for the two most recent performances of maintenance activity which implies two intervals of documentation be maintained. ATC does not agree that requiring all data for two full cycles is warranted. The volume and length of data retention is unreasonable. ATC recommends that the entity retain the last test date with the associated data, plus the prior cycle test date only without retaining the test data. ATC agrees with assignment of the measures.
Response: Thank you for your comments. In order that a Compliance Monitor can be assured of compliance, the SDT believes that the Compliance Monitor will need the data of the most recent performance of the maintenance, as well as the data of the preceding		

Organization	Yes or No	Question 3 Comment
one. The SDT has specified the data retention in the posted Standard to establish this level of documentation.		
MRO's NERC Standards Review Subcommittee (NSRS)	No	The NERC standard assigns a retention period for the two most recent performances of maintenance activity which implies two intervals of documentation being maintained. The NSRS does not agree that requiring all data for two full cycles is warranted. The volume and length of data retention is unreasonable. The NSRS recommends that the entity retain the last test date with the associated data, plus the prior cycle test date only without retaining the test data.
Response: Thank you for your comments. In order that a Compliance Monitor can be assured of compliance, the SDT believes that the Compliance Monitor will need the data of the most recent performance of the maintenance, as well as the data of the preceding one. The SDT has specified the data retention in the posted Standard to establish this level of documentation.		
Pepco Holdings, Inc. - Affiliates	No	The present wording regarding data retention states - The Transmission Owner, Generator Owner, and Distribution Provider shall each retain documentation of the two most recent performances of each distinct maintenance activity for the Protection System components, or to the previous on-site audit date, whichever is longer. This wording was changed by the SDT following comments received from Draft 1. However, the present wording is somewhat confusing. It is assumed that the intent of the SDT was to require documentation be retained for the two most recent performances of each distinct maintenance activity, regardless of when they occurred (i.e., whether prior to, or since the last audit), since the phrase whichever is longer was used. In addition, for those activities requiring short maintenance intervals (such as battery inspections), records must be kept for all performances (not just the last two) that have taken place since the last on-site audit. For example: Assume a PSMP with a 6 year interval for relay maintenance and 3 month interval for battery inspections. At a particular station assume the batteries have been inspected every 3 months; the relays were last inspected 5 years ago, and before that 11 years ago. The last audit was 2 years ago. Records from each 3 month battery inspection going back to the last audit needs to be retained. Also, both relay maintenance records from 5 and 11 years ago needs to be retained, despite the fact that this interval should

Organization	Yes or No	Question 3 Comment
		have been reviewed during the last audit. Documentation from the 11 year ago activity can be discarded when the relays are next maintained. Is this what the SDT intended? If so, the requirement should be re-worded to better explain the intent. Also, examples should be included in either the FAQ or Supplemental Reference to demonstrate what is expected.
Response: Thank you for your comments. You understand the data retention correctly as intended by the SDT and specified in the draft standard. In order that a Compliance Monitor can be assured of compliance, the SDT believes that the Compliance Monitor will need the data of the most recent performance of the maintenance, as well as the data of the preceding one, as well as data to validate that entities have been in compliance since the last audit (or currently, since the beginning of mandatory compliance). The SDT has specified the data retention in the posted Standard to establish this level of documentation. .		
We Energies	No	The requirement to retain data for the two most recent maintenance cycles is excessive. The required data should be limited to the complete data for the most recent cycle, and only the test date for the previous cycle.
Response: Thank you for your comments. In order that a Compliance Monitor can be assured of compliance, the SDT believes that the Compliance Monitor will need the data of the most recent performance of the maintenance, as well as the data of the preceding one. The SDT has specified the data retention in the posted Standard to establish this level of documentation.		
Long Island Power Authority	No	1. Two most recent performances of each distinct maintenance activity for the Protection System components will require data retention for an extended period of time. For example, in certain cases, battery maintenance is on a 12 year cycle which suggests that records need to be retained for 24 years. LIPA suggests retaining data for the most recent maintenance activity. 2. LIPA seeks clarification on “on-site audit” - does it include audits by any of the following - NPCC/NERC/FERC. Also, several small entities do not have on-site audits and participate in off-site audits. Hence, LIPA suggests deleting “on-site” from the requirement. In addition further clarification is required to the Data Retention section to

Organization	Yes or No	Question 3 Comment
		coordinate with the statement in FAQ (Section IV.d p. 22 redline).
Response: Thank you for your comments. **1.** In order that a Compliance Monitor can be assured of compliance, the SDT believes that the Compliance Monitor will need the data of the most recent performance of the maintenance, as well as the data of the preceding one; thus, records for maintenance which is performed every 12 years will need to be retained for 24 years.. The SDT has specified the data retention in the posted Standard to establish this level of documentation. Audits may be by any of the entities listed. The term "on-site" has been replaced by "scheduled" to address your concern.		
Northeast Utilities	No	Two most recent performances of each distinct maintenance activity for the Protection System components will require data retention for an extended period of time. From the FAQ, it is understood that "the intent is not to have three test result providing two time intervals, but rather have two test results proving the last interval". However two intervals still results in an extended period of time. For example, for a twelve year interval, data would need to be retained for ~24 years. During that period of time a number of on-site audits would have been completed - it is not clear why the requirement is the longer of the two most recent performances or to the previous on site audit date.
Response: Thank you for your comments. In order that a Compliance Monitor can be assured of compliance, the SDT believes that the Compliance Monitor will need the data of the most recent performance of the maintenance, as well as the data of the preceding one. The SDT has specified the data retention in the posted Standard to establish this level of documentation.		
MidAmerican Energy Company	No	Verification of compliance with the maximum time intervals for testing only needs to include retention of the documentation of the two most recent maintenance activities. The phrase "or to the previous on-site audit (whichever is longer)" should be deleted.
Response: Thank you for your comments. In order that a Compliance Monitor can be assured of compliance, the SDT believes that the Compliance Monitor will need the data of the most recent performance of the maintenance, as well as the data of the preceding one, as well as data to validate that entities have been in compliance since the last audit (or currently, since the beginning of mandatory		

Organization	Yes or No	Question 3 Comment
compliance). The SDT has specified the data retention in the posted Standard to establish this level of documentation.		
BGE	Yes	
Black Hills Power	Yes	
Bonneville Power Administration	Yes	
Consumers Energy Company	Yes	
Dynegy Inc.	Yes	
Entergy Services	Yes	
Exelon	Yes	
Great River Energy	Yes	
Hydro One Networks	Yes	
MEAG Power	Yes	
Pacific Northwest Small Public Power Utility Comment Group	Yes	
PNGC Power	Yes	

Organization	Yes or No	Question 3 Comment
ReliabilityFirst Corp.	Yes	
Southern Company Transmission	Yes	
The United Illuminating Company	Yes	
Western Area Power Administration	Yes	
Y-W Electric Association, Inc.	Yes	
South Carolina Electric and Gas	Yes	(Note that Section C.M2 leaves off "Distribution Provider" but references Requirement R2 at the end of the Section. "R2 applies to the Distribution Provider.")
Response: Thank you for your comments. Measure M2 has been modified to add “Distribution Provider.”.		
Nebraska Public Power District	Yes	Additional guidance on what is acceptable evidence is always good.
Response: Thank you for your comments. In addition to the lists within the Measures, the FAQ (IV.1.B) and Section 15.7 of the Supplementary Reference Document provide additional guidance about acceptable evidence.		
Florida Municipal Power Agency	Yes	M1 could be shortened to just a program in accordance with R1, rather than repeat the entire requirement
Response: Thanks you for your comments. The restatement of the definition has been removed from Measure M1, but the Reliability		

Organization	Yes or No	Question 3 Comment
Standards Development Procedure specifies that Measures contain levels of detail similar to Measure M1 as posted.		
NERC Staff	Yes	Make sure that the use of verbs like “shall,” “should,” and “will” is consistent across Requirements and Measures. In these four measures, all three verbs are used, and they should be made uniform to avoid misinterpretation.
Response: Thank you for your comments. The Measures have been modified to consistently use “shall.”		
Manitoba Hydro	Yes	No issues or concerns at present
Response: Thank you.		
SERC Protection and Control Sub-committee (PCS)	Yes	The SERC PCS expresses no comments on this question.
Response: Thank you.		
FirstEnergy	Yes	We agree with the Measures but suggest some improvements: 1. In Measures M2 and M3, the term "should" must be changed to "shall" 2. In Measure M2, the Distribution Provider entity is missing
Response: Thank you for your comments. 1. Measure M2 and Measure M3 have been modified as suggested. **2.** Distribution Provider has been added to Measure M2.		
Santee Cooper	Yes	We are concerned with the long-term implementation of the data retention requirements for activities with long maximum intervals. For example, if you are performing an activity that is required every 12 years, the implementation plan says that you should be 100% compliant

Organization	Yes or No	Question 3 Comment
		in 12 years following regulatory approval. However, assuming that 100% compliant meant that you got through all of your components once, you still would not be able to show the last two test dates. 12 years from now, would you still have to discuss the program you were using prior to 12 years ago for those components to have a complete audit, because of having to address the last 2 test dates?
Response: Thank you for your comments. First of all, the Data Retention presumes a stable Standard that has been in effect. Further, the SDT believes that Compliance Monitors will assess compliance for activities performed before the effective date of this Standard using the program that you had in place previously. Therefore, the documentation for your program under PRC-005-1 (whatever it may have been) will serve as your "second interval" documentation until supplanted by new PRC-005-2 records.		

4. The SDT has included VSLs with this posting. Do you agree with the assignments that have been made? If not, please provide specific suggestions for change.

Summary Consideration: Many commenters were concerned about the basis for the percentage increments for different severities of VSLs; these commenters were referred to the VSL Guidelines which propose a Lower VSL as noncompliant with "5% or less," the Medium VSL as "more than 5% but less than (or equal to) 10%," the High VSL as "more than 10% up to (and including) 15%," and the Severe VSL as "more than 15% noncompliant.".

Similarly, many commenters suggested that binary VSLs be assigned a Lower or High rather than a Severe, and were also referred to the VSL Guidelines which indicate that total noncompliance with a requirement is a Severe VSL. VSLs are not indicators of "importance" or "reliability-related risk" – VSLs are an indication of the degree of noncompliant performance.

The VSL for Requirement R4 was modified to add stepped VSLs relating to resolution of maintenance-correctable issues in response to several comments.

Several commenters suggested that the Lower VSL for R4 start at 1% rather than 5%, which is not in accordance with the VSL Guidelines.

Organization	Yes or No	Question 4 Comment
PPL Supply		No Comment.
Xcel Energy		No comments
San Diego Gas & Electric	No	
The Detroit Edison	No	

Organization	Yes or No	Question 4 Comment
Company		
GDS Associates	No	1. We do agree with the majority of the assignments that have been made, however the standard needs specific guidance so to be clearly evidentiated the components as included in the definition of Protection System. The applicability of the standard does not address the current issues regarding radial + load serving only situation when Protection System not designed to provide protection for the BES. 2. Not sure if the percentages corresponding to the events and activities are appropriately assigned. What were the criteria on which all these percentages are based upon? 3. Requirement R3 Severe VSL note 3 allows smaller segment population than the Lower VSL. How these segment limits were developed?
Response: Thank you for your comments. 1. This is an issue related to your Regional BES definition, not to the VSLs. 2. The VSL Guidelines, developed in accordance with the FERC VSL Order, establish the Lower VSL for stepped VSLs as "5% or less," the Medium VSL as "more than 5% but less than (or equal to) 10%," the High VSL as "more than 10% up to (and including) 15%," and the Severe VSL as "more than 15%." **3.** The segment limits for Requirement R3 and Attachment A were developed according to statistical references to assure that performance-based programs are based on a statistically-significant population. See Section 9 of the Supplementary Reference Document. The Lower VSL addresses "a slightly smaller segment population" than specified; the Severe VSL addresses "a significantly smaller segment population" than specified.		
Ameren	No	1) The Lower VSL for all Requirements should begin above 1% of the components. For example for R4: "Entity has failed to complete scheduled program on 1% to 5% of total Protection System components." PRC-005-2 unrealistically mandates perfection without providing technical justification. A basic premise of engineering is to allow for reasonable tolerances, even Six Sigma allows for defects. Requiring perfection may well harm

Organization	Yes or No	Question 4 Comment
		reliability in that valuable resources will be distracted from other duties. 2) In R1, a "Failure to specify whether a component is being addressed by time-based, condition-based, or performance-based maintenance" by itself is a documentation issue and not an equipment maintenance issue. Suggest this warrants only a lower VSL, especially when one of the required components can only be time based. It is possible that a component that failed to be individually identified per R1.1 was included by entity A's maintenance plan. This documentation issue gets a higher VSL than entity B that identified a component without maintaining it. We suggest the R1 VSL be change to Low, since we believe lack of maintenance to be more severe than documentation issues.
Response: Thank you for your comments. 1. The SDT shares your concerns regarding the Lower VSL portion of the stepped VSLs not providing any tolerance for non-conformance without being non-compliant. However, the VSL Guidelines, which conform to the FERC VSL Order, specify that Lower shall be "5% or less." **2.** The VSL for Requirement R1 addresses various levels of severity for degrees of non-compliance. The VSL Guidelines, developed in accordance with the FERC VSL Order, establish that if only a single VSL is provided, it must be Severe. The reliability-related risk related to noncompliance with this requirement is addressed by the VRF being assigned as Lower.		
Entergy Services	No	1. R4: A "Failure to specify whether a component is being addressed by time-based, condition-based, or performance-based maintenance" by itself is a documentation issue and not an equipment maintenance issue. Suggest this warrants only a lower VSL, especially when one of the required components can only be time based. 2. R4: Suggest a stepped VSL for "Entity has failed to initiate resolution of maintenance-correctable issues". While we understand the importance of addressing a correctable issue, it seems like there should be some allowance for an isolated unintentional failure to address a correctable issue. If possible, consider the potential impact to the system. For example, a failure to address a pilot scheme correctable issue for an entity that only employs pilot schemes for system stability applications should not necessarily have the

Organization	Yes or No	Question 4 Comment
		same VSL consequence as an entity which employs pilot schemes everywhere on their system as a standard practice.
Response: Thank you for your comments. 1. This actually addresses the VSL for Requirement R1, which addresses various levels of severity for degrees of non-compliance. The risk related to this is addressed by the VRF being assigned as Lower. **2.** The VSL for Requirement R4 has been modified to provide stepped VSLs for initiation of resolution of maintenance-correctable issues.		
WECC	No	Compliance does not agree. The R1 VSL allows too much to interpret. What does no more than 5% of the component actually use to define the percentage; it should be specific if it is referring to the weight of each component and how many components are there. For example, Protective Relay is one component of five. In addition the VSL for Lower, Moderate and High states in the first paragraph that the entity included all of the "Types" of components according to the definition, though failed to "Identify the Component". It needs clarity on how it can be included though not specifically identified like the next two bullets. The same concern applies to R2 and R4. Be specific about what is included (or not) to calculate those percentages.
Response: Thank you for your comments. The percentages will depend to a large degree how the entity describes their components. A definition of "Component" has been added to the Standard to provide guidance and help provide consistency.		
Constellation Power Generation	No	Constellation Power Generation does not agree with the proposed data retention section. Retaining and providing evidence of the two most recent performances of each distinct maintenance activity should be sufficient. For entities that have not been audited since June of 2007, having to retain evidence from that date to the date of an audit could contain numerous cycles, which is cumbersome and does not improve the reliability of the BES.
Response: Thank you for your comments. This comment is not relevant to VSLs. In order for a Compliance Monitor to be assured of		

Organization	Yes or No	Question 4 Comment
compliance, the SDT believes that the Compliance Monitor will need the data of the most recent performance of the maintenance, as well as the data of the preceding one, as well as data to validate that entities have been in compliance since the last audit (or currently, since the beginning of mandatory compliance). The SDT has specified the data retention in the posted Standard to establish this level of documentation.		
Northeast Utilities	No	For R1 under Severe VSL - suggest moving the first criteria "The entity's PSMP failed to address one or more of the type of components included in the definition of "Protection System" under High VSL since this criteria cannot have the same VSL level as "Entity has not established a PSMP".
Response: Thank you for your comments. The SDT believes that, if an entity has missed one (of the five) entire component types in their program, they do not have a complete program.		
Florida Municipal Power Agency	No	1. For the VSLs of R1 and R2, we do not understand where the 5%, 10% come from. There are only a few types of components, relays, batteries, current transformers and voltage transformers, DC control circuitry, communication, that's 6 component types by our count, so, missing 1 component type in discussing the type of maintenance program is already a 17% error and Low, Medium and High VSLs are meaningless as currently drafted and every violation would be Severe, was the intention to apply this is a different fashion? 2. Perfection is Not A Realistic Goal R4 allows no mistakes. Even the famous six sigma quality management program allows for defects and failures (i.e., six sigma is six standard deviations, which means that statistically, there are events that fall outside of six standard deviations). PRC-005 has been drafted such that any failure is a violation, e.g., 1 day late on a single relay test of tens of thousands of relays is a violation. That is not in alignment with worldwide accepted quality management practices (and also makes audits very painful because statistical, random sampling should be the mode of audit, not 100% review as is currently being done in many instances). FMPA suggests considering statistically based performance metrics as opposed to an unrealistic performance target that does not allow for any failure ever. Due to the shear volume of

Organization	Yes or No	Question 4 Comment
		relays, with 100% performance required, if the standards remain this way, PRC-005 will likely be in the top ten most violated standards for the forever. In other words, 1-2% of components outside of the program should be allowed without a violation and Low VSL should start at a non-zero number, such as "Entity failed to complete scheduled program for 3-6% of components based on a statistically significant random sampling" or something to that affect. 3. There is a fundamental flaw in thinking about reliability of the BES. We are really not trying to eliminate the risk of a widespread blackout; we are trying to reduce the risk of a widespread blackout. We plan and operate the system to single and credible double contingencies and to finite operating and planning reserves. To eliminate the risk, we would need to plan and operate to an infinite number of contingencies, and have an infinite reserve margin, which is infeasible. Therefore, by definition, there is a finite risk of a widespread blackout that we are trying to reduce, not eliminate, and, by definition, by planning and operating to single and credible double contingencies and finite operating and planning reserves, we are actually defining the level of risk from a statistical basis we are willing to take. With that in mind, it does not make sense to require 100% compliance to avoid a smaller risk (relays) when we are planning to a specified level of risk with more major risk factors (single and credible double contingencies and finite planning and operating reserves).

Response: Thank you for your comments.

1. The VSL Guidelines, developed in accordance with the FERC VSL Order, establish the Lower VSL for stepped VSLs as "5% or less," the Medium VSL as "more than 5% but less than (or equal to) 10%," the High VSL as "more than 10% up to (and including) 15%," and the Severe VSL as "more than 15%." Much of this comment seems to relate to the VSL for Requirement R1; this VSL has been extensively revised, and additional terms have been added to the Definitions section to clarify.
2. The SDT shares your concerns regarding the Lower VSL portion of the stepped VSLs not providing any tolerance for non-conformance without being non-compliant. However, the VSL Guidelines, which conform to the FERC VSL Order, specify that Lower shall be "5% or less." The VRF and VSLs are only a starting point in determining the size of a penalty or sanction – the

Organization	Yes or No	Question 4 Comment
Compliance Enforcement Authority has latitude to consider aggravating factors and mitigating factors in determining whether there should be any penalty, and the size of any penalty. These mitigating and aggravating factors are oultined in the Compliance Monitoring and Enforcement Program. http://www.nerc.com/files/Appendix4C_Uniform_CMEP_10022009.pdf **3.** The SDT believes that Protection Systems that trip (or can trip) the BES should be included. This position is consistent with the currently-approved PRC-005-1, consistent with the SAR for Project 2007-17, and understands this to be consistent with the position of FERC staff. The NERC criteria for VSLs do not currently permit them to allow some level of non-performance without being in violation.		
Santee Cooper	No	In R1, a "Failure to specify whether a component is being addressed by time-based, condition-based, or performance-based maintenance" by itself is a documentation issue and not an equipment maintenance issue. Suggest this warrants only a lower VSL, especially when one of the required components can only be time based.
Response: Thank you for your comments. The VSL for Requirement R1 addresses various levels of severity for degrees of non-compliance.		
SERC Protection and Control Sub-committee (PCS)	No	In R1, a "Failure to specify whether a component is being addressed by time-based, condition-based, or performance-based maintenance" by itself is a documentation issue and not an equipment maintenance issue. Suggest this warrants only a lower VSL, especially when one of the required components can only be time based.
Response: Thank you for your comments. The VSL for Requirement R1 addresses various levels of severity for degrees of non-compliance.		
Progress Energy Carolinas	No	In the VSL for R1, a failure to "specify whether a component is being addressed by time-based, condition-based, or performance-based maintenance" by itself is a documentation issue and not an equipment maintenance issue. Suggest this warrants only a lower VSL, especially when one of the required components can only be time based.
Response: Thank you for your comments. The VSL for Requirement R1 addresses various levels of severity for degrees of non-		

Organization	Yes or No	Question 4 Comment
compliance.		
Pacific Northwest Small Public Power Utility Comment Group	No	is possible that a component that failed to be individually identified per R1.1 was included by entity A's maintenance plan. This documentation issue gets a higher VSL than entity B that identified a component without maintaining it. We suggest the R1 VSL be change to Low, since we believe lack of maintenance to be more severe than documentation issues.
Response: Thank you for your comments. The VSL for Requirement R1 addresses various levels of severity for degrees of non-compliance. The risk related to non-compliance with the various requirements is addressed by assignment of the associated VRFs. Additionally, Requirement R1 and the associated VSLs have been substantially modified, and may address your concern.		
Pepco Holdings, Inc. - Affiliates	No	It is possible that a component that failed to be individually identified per R1.1 was included by entity A's maintenance plan. This documentation issue gets a higher VSL than entity B that identified a component without maintaining it. We suggest the R1 VSL be change to Low, since we believe lack of maintenance to be more severe than documentation issues.
Response: Thank you for your comments. The VSL for Requirement R1 addresses various levels of severity for degrees of non-compliance.		
PNGC Power	No	It is possible that a component that failed to be individually identified per R1.1 was included by entity A's maintenance plan. This documentation issue gets a higher VSL than entity B that identified a component without maintaining it. We suggest the R1 VSL be change to Low, since we believe lack of maintenance to be more severe than documentation issues.
Response: Thank you for your comments. The VSL for Requirement R1 addresses various levels of severity for degrees of non-compliance.		
Long Island Power Authority	No	1. R4 under Severe VSL mentions - Entity has failed to initiate resolution of maintenance-correctable issues. What proofs will satisfy the requirement that the entity has initiated the resolution.

Organization	Yes or No	Question 4 Comment
		2. R1 under Severe VSL - LIPA suggests moving the first criteria "The entity's PSMP failed to address one or more of the type of components included in the definition of "Protection System" under High VSL since this criteria cannot have the same VSL level as "Entity has not established a PSMP".
Response: Thank you for your comments. 1. The SDT is unable to categorically state what will satisfy a Compliance Monitor, but it seems that a work order addressing the maintenance-correctable issue would be one example. FAQ IV.1.B and Section 15.7 of the Supplementary Reference Document may also be helpful. **2.** The SDT believes that if an entity has missed one (of the five) entire component types in their program, they do not have a complete program.		
Northeast Power Coordinating Council	No	1. R4 under Severe VSL mentions - Entity has failed to initiate resolution of maintenance-correctable issues. What proof will satisfy the requirement that the entity has initiated the resolution? 2. R1 under Severe VSL - Move the first criteria "The entity's PSMP failed to address one or more of the type of components included in the definition of 'Protection System'" under High VSL since this criteria cannot have the same VSL level as "Entity has not established a PSMP".
Response: Thank you for your comments. 1. The SDT is unable to categorically state what will satisfy a Compliance Monitor, but it seems that a work order addressing the maintenance-correctable issue would be one example. FAQ IV.1.B and Section 15.7 of the Supplementary Reference Document may also be helpful. **2.** The SDT believes that if an entity has missed one (of the five) entire component types in their program, they do not have a complete program.		

Organization	Yes or No	Question 4 Comment
MidAmerican Energy Company	No	The lower VSL specification for R4 should allow for a small level of incomplete testing. Suggest changing “5% or less” to “from 1% to 5%”.
Response: Thank you for your comments. The SDT shares your concerns regarding the Lower VSL portion of the stepped VSLs not providing any tolerance for non-conformance without being non-compliant. However, the VSL Guidelines, which conform to the FERC VSL Order, specify that Lower shall be “5% or less.”The VRF and VSLs are only a starting point in determining the size of a penalty or sanction – the Compliance Enforcement Authority has latitude to consider aggravating factors and mitigating factors in determining whether there should be any penalty, and the size of any penalty. These mitigating and aggravating factors are oultined in the Compliance Monitoring and Enforcement Program. http://www.nerc.com/files/Appendix4C_Uniform_CMEP_10022009.pdf		
Springfield Utility Board	No	The Violation Risk Factors are problematic. 1. With all due respect, it seems that NERC still operates in a "BIG UTILITY" mind set. Big utilities have potentially hundreds or thousands of components under different device types. Looking at the VRFs, the percentages 5% or 15% as an example, are looked at based on a deep pool of multiple devices so a "BIG UTILITY" that misses a component or small number of components may not trigger a high severity level. However a small utility may have only a handful of components under each type. Therefore if the small utility were to miss one component all of a sudden the utility automatically triggers the 5% or 15% threshold. This type of dynamic unreasonable and not equitable. Therefore (in an attempt to work within the framework proposed), SUB proposes that there be a minimum number of components that might not be in compliance which result in a much lower Violation Severity Level. SUB suggests that NERC try to create a level playing field. If 15% of a Big Utility's total number of components averages at around 15 out of 100 total then perhaps a reasonable outcome would be that up to 5 components (regardless of the total number of components an entity has under each type) could be in violation without tripping into a high VSL.(the 5 components threshold may not apply to all types, this is just for illustrative purposes).

Organization	Yes or No	Question 4 Comment
		2. Also, are the missed components compounding? For example, if an entity missed 5 components on year three and another 5 components in year 10 is the VSL based on 10 components or 5 components. There should be a time horizon attached to the VSL such that the VSL does not count prior components that were brought into compliance through a past action. That intent may be to not have the VSLs be based on compounding numbers of components; however that should be made clear.
Response: Thank you for your comments. You discussed VRFs, but it appears that you are actually discussing VSLs. 1. The SDT shares your concern about the stepped VSLs. However, the VSL Guidelines, developed in accordance with the FERC VSL Order, establish the Lower VSL for stepped VSLs as "5% or less," the Medium VSL as "more than 5% but less than (or equal to) 10%," the High VSL as "more than 10% up to (and including) 15%," and the Severe VSL as "more than 15%." The SDT did, however, modify the VSLs for R1 so that they do not use percentages. **2.** The VSLs are assigned on the basis of percentages of components for which you are non-compliant. The SDT suggests that you review the Compliance Monitoring Enforcement Program for clarification on self-reports, and so forth.		
Tennessee Valley Authority	No	The Violation Severity Level Table listing for Requirement R4 lists the following under "Severe VSL"."Entity has failed to initiate resolution of maintenance-correctable issues" The threshold for a Severe Violation in this case is too broad and too subjective. The threshold needs to be clearly defined with low, medium, and high criteria.
Response: Thank you for your comments. The VSLs for Requirement R4 have been modified to provide stepped VSLs for initiation of resolution of maintenance-correctable issues.		
BGE	No	The VSL's as proposed may be reasonable but it is difficult to endorse them until the ambiguity in R1.1 is reduced.
Response: Thank you.		
Duke Energy	No	The VSLs for PRC-005-2 requirements R1, R2 and R4 have significantly tighter

Organization	Yes or No	Question 4 Comment
		percentages than the corresponding requirements in PRC-005-1. We believe that the Lower VSL should be up to 10%, the Moderate VSL should be 10%-15%, the High VSL should be 15% to 20%, and the Severe VSL should be greater than 20%, which is still a lower percentage than the 25% Lower VSL currently in PRC-005-1.
Response: Thank you for your comments. The SDT shares your concern abuout the stepped VSLs. However, the VSL Guidelines, developed in accordance with the FERC VSL Order, establish the Lower VSL for stepped VSLs as "5% or less," the Medium VSL as "more than 5% but less than (or equal to) 10%," the High VSL as "more than 10% up to (and including) 15%," and the Severe VSL as "more than 15%."		
Indeck Energy Services	No	1. The VSL's treat all entities, components and problems alike. By combining 4 protection maintenance standards, it elevates the VSL on otherwise minor problems to the highest levels of any of the predecessor standards. The threshold percentages are very arbitrary. Severe VSL doesn't in any way relate to reliability. For a small generator to miss or mis-categorize 1 out of 7 relays is unlikely to have any impact on reliability, much less deserving a severe VSL. The R2 & R4 VSL's don't care about results of the program, only whether all components are covered. Half of the components could fail annually and it's not a Severe VSL. 2. The R3 VSL allows 4% countable events, which can be hundreds for a large entity and only allows a few for a small entity.
Response: Thank you for your comments. 1. The VSL Guidelines, developed in accordance with the FERC VSL Order, establish the Lower VSL for stepped VSLs as "5% or less," the Medium VSL as "more than 5% but less than (or equal to) 10%," the High VSL as "more than 10% up to (and including) 15%," and the Severe VSL as "more than 15%." VSLs are not intended to assess the risk to reliability of noncompliance, VSLs are intended to identify different degrees of noncompliance with the associated requirement. The VRFs assess the risk to reliability of noncompliance with the requirement. **2.** Relating to the R3 VSL, the "4% countable events" corresponds to the requirement relevant to performance-based programs in Attachment A. This value was determined to be a statistically significant value relating to performance-based programs, which		

Organization	Yes or No	Question 4 Comment
may not be practical for a small entity to implement without aggregation with other entities having similar programs. See Section 9 of the Supplementary Reference Document.		
US Bureau of Reclamation	No	1. The VSL's use terms that are not tied back to a requirement and appear to be based on the concept that every component will cause an impact on the BES. The VSL's use the term "countable event" to score the VSL; however, there is no requirement associated with the number of "countable events". 2. The VSL's should allow for minor gaps in maintenance documentation where there is no impact to the BES if the component failed.
Response: Thank you. 1. The VSL for Requirement R3, which you are questioning, addresses limits on "countable events" as they relate to the requirements for a Perfomance Based program within Attachment A. 2. The NERC criteria for VSLs do not currently permit them to allow some level of non-performance without being in violation. The VRF and VSLs are only a starting point in determining the size of a penalty or sanction – the Compliance Enforcement Authority has latitude to consider aggravating factors and mitigating factors in determining whether there should be any penalty, and the size of any penalty. These mitigating and aggravating factors are oultined in the Compliance Monitoring and Enforcement Program. http://www.nerc.com/files/Appendix4C_Uniform_CMEP_10022009.pdf		
Black Hills Power	No	-VSL's are based on percentages of components, where the definition of a 'component' is in many cases up to the entity to interpret (see PRC-005-2 FAQ sheet, Page 2). Basing VSL's on an entities interpretation (or count) of 'components' is not an equitable measure of severity level.
Response: Thank you for your comment. A definition of "Component" has been added to the Standard to provide guidance and help provide consistency.		
JEA	No	We could find no rational provided for the % associated with each VSL, or component

Organization	Yes or No	Question 4 Comment
		rationale used to determine the proposed values listed. Is this included in some documentation that is available but not included as part of this review?
Response: Thank you for your comments. The percentages, are established in accordance with the VSL Guidelines, developed in accordance with the FERC VSL Order, which establish the Lower VSL for stepped VSLs as "5% or less," the Medium VSL as "more than 5% but less than (or equal to) 10%," the High VSL as "more than 10% up to (and including) 15%," and the Severe VSL as "more than 15%." The VSL Guidelines are posted on the Standard Resources web page: http://www.nerc.com/files/VSL_Guidelines_20090817.pdf		
American Electric Power	Yes	
American Transmission Company	Yes	
Arizona Public Service Company	Yes	
Bonneville Power Administration	Yes	
Consumers Energy Company	Yes	
Dynegy Inc.	Yes	
Exelon	Yes	
FirstEnergy	Yes	
Great River Energy	Yes	

Organization	Yes or No	Question 4 Comment
Hydro One Networks	Yes	
MRO's NERC Standards Review Subcommittee (NSRS)	Yes	
Nebraska Public Power District	Yes	
PacifiCorp	Yes	
Public Service Enterprise Group ("PSEG Companies")	Yes	
ReliabilityFirst Corp.	Yes	
South Carolina Electric and Gas	Yes	
The United Illuminating Company	Yes	
We Energies	Yes	
Western Area Power Administration	Yes	
Y-W Electric Association,	Yes	

Organization	Yes or No	Question 4 Comment
Inc.		
MEAG Power	Yes	It would be good to have the basis of the 5%, 10% and 15% defined. With time and experience these percentages may need to be changed.
Response: Thank you for your comment. The VSL Guidelines, developed in accordance with the FERC VSL Order, establish the Lower VSL for stepped VSLs as "5% or less," the Medium VSL as "more than 5% but less than (or equal to) 10%," the High VSL as "more than 10% up to (and including) 15%," and the Severe VSL as "more than 15%."		
Manitoba Hydro	Yes	There is no rational provided for the % associated with each VSL, or component rationale used to determine the proposed values listed.
Response: Thank you for your comment. The VSL Guidelines, developed in accordance with the FERC VSL Order, establish the Lower VSL for stepped VSLs as "5% or less," the Medium VSL as "more than 5% but less than (or equal to) 10%," the High VSL as "more than 10% up to (and including) 15%," and the Severe VSL as "more than 15%."		

5. **The SDT has revised the "Supplementary Reference" document which is supplied to provide supporting discussion for the Requirements within the standard. Do you agree with the changes? If not, please provide specific suggestions for change.**

Summary Consideration: Most commenters seemed to appreciate the information provided within the Supplementary Reference document. Many commenters asked whether the Supplementary Reference was part of the Standard, to which the SDT replied, "No."

Several commenters also were concerned that the Supplementary Reference document may not be kept current with the Standard itself. There were assorted individual technical comments about the Supplementary Reference document, to which the SDT responded. Several comments irrelevant to the Supplementary Reference document were also offered; the SDT offered responses relevant to the comments.

Organization	Yes or No	Question 5 Comment
PPL Supply		No Comment.
Santee Cooper		No Comment.
SERC Protection and Control Sub-committee (PCS)		The SERC PCS expresses no opinion on this question.
San Diego Gas & Electric	No	
Ameren	No	1) Is this document considered part of the standard? We expect to use it as a reference in developing our PSMP, during audits, and for self-certification as an authentic source of information. It is also unclear how this document will be controlled (i.e. Revised and

Organization	Yes or No	Question 5 Comment
		Approved, if at all). 2) On page 22 please clarify that only applies to high speed ground switches associated with BES elements. 3) We appreciate the SDT providing this valuable reference.
Response: Thank you for your comments. 1. This document provides supporting discussion, but is not part of the Standard. The SDT intends that it be posted as a reference document, accompanying the Standard. As established in SDT Guidelines, the Standard is to be a terse statement of Requirements, etc., and is not to include explanatory information like that included in the Supplementary Reference document. The SDT intends that this document help explain, clarify, and in some cases suggest methods to comply with the Standard. The Standards Committee has a formal process for determining whether to authorize posting a reference document with an approved standard. That process is posted on the Standard Resources web page – here is a link to the procedure: http://www.nerc.com/files/SC_Process_Approve_Supporting_References_Approved_10Mar08.pdf 2. The Standard applies to High-Speed Ground Switches that are used to trip BES elements or that are used to protect BES elements. In response to your comment, the SDT has modifed the Supplementary Reference Section 15.3 as follows: "The SDT believes that this is essentially a transferred-tripping device without the use of communications equipment. If this high-speed ground switch is "…applied on, or designed to provide protection for the BES…" then this device needs to be treated as any other Protection System component. The control circuitry would have to be tested within 12 years and any electromechanically operated device will have to be tested every 6 years. If the spring-operated ground switch can be disconnected from the solenoid triggering unit then the solenoid triggering unit can easily be tested without the actual closing of the ground blade. 3. Thank you.		
Xcel Energy	No	1. As we commented on in the previous draft of the standard that proposed the Supplementary Reference and FAQ, we are concerned as to what role these documents will play in compliance/auditing. It is also unclear how these documents will be controlled (i.e. Revised and Approved, if at all). 2. Inconsistencies have been identified between proposed standard and the documents

Organization	Yes or No	Question 5 Comment
		(e.g. page 29 of FAQ example 1).
Response: Thank you for your comments. 1. This document provides supporting discussion, but is not part of the Standard. The SDT intends that it be posted as a Reference Document, accompanying the Standard. As established in SDT Guidelines, the Standard is to be a terse statement of Requirements, etc., and is not to include explanatory information like that included in the Supplementary Reference document. The Supplementary Reference and FAQ have been revised to make them consistent with the new version of PRC-005-2. The Standards Committee has a formal process for determining whether to authorize posting a reference document with an approved standard. That process is posted on the Standard Resources web page – here is a link to the procedure: http://www.nerc.com/files/SC_Process_Approve_Supporting_References_Approved_10Mar08.pdf 2. Thank you. The FAQ has been revised to make it consistent with the new version of PRC-005-2 and the Supplementary Reference document.		
Pepco Holdings, Inc. - Affiliates	No	Figure 1 & 2 Legend (page 29), Row 5, Associated Communications Systems, includes Tele-protection equipment used to convey remote tripping action to a local trip coil or blocking signal to the trip logic (if applicable). This description does not include all the various types of signals communicated for proper operation of various protective schemes (i.e., DUTT, POTT, DCB, Current Differential, Phase Comparison, synchro-phasors, etc.) A more inclusive and generic description might be - Tele-protection equipment used to convey specific information, in the form of analog or digital signals, necessary for the correct operation of protective functions. This is also consistent with the revised definition of Protection System. Conversely, excluded equipment would be - Any communications equipment that is not used to convey information necessary for the correct operation of protective functions.
Response: Thank you for your comment. The Supplementary Reference and FAQ have been revised to make them consistent with the new version of PRC-005-2 and each other, and to incorporate language similar to your suggestion.		

Organization	Yes or No	Question 5 Comment
MEAG Power	No	Further clarification is needed. The information provided on verifying outputs of voltage and current sensing devices is confusing. In one part, it indicates that the intent is to verify that intended voltages and currents are getting to the relay apparently without regards to accuracy. A practical method of verifying the output of VTs and CTs is not identified and need to be identified.
Response: Thank you for your comments. The intent of the maintenance activity is to verify that the necessary values reach the protective relays. The SDT believes that a maintenance plan that requires infra-red scanning of VTs and CTs is not sufficient. The SDT further believes that routine commissioning tests, while certainly allowed, need not be required in the Standard because mere ratio tests would not prove that the values reach the relay. A practical method is to read the values at the relays and, as you state, verify that the quantities meet your needs. The SDT believes that the discussion in Section 15.2 of the Supplementary Reference is sufficient, and is supplemented in several subsections of FAQ II.3.		
Indeck Energy Services	No	In 2.3, the applicability is stated to have been modified. As discussed at the FERC Technical Conference on Standards Development, the goal of the standards program is to avoid or prevent cascading outages--specifically not loss of load. The modified applicability moves away from the purpose of the standards program to an undefined fuzzy concept. Applicable Relays ignore the fact that some relays, or even some entities, have little to no affect on reliability. The global definition of Protective System encompasses all equipment, and doesn't differentiate the components that meet the purpose of the standards program. The Supplementary Reference doesn't overcome the inherent shortcomings of the standard.
Response: Thank you for your comments. The Supplementary Reference is intended to help clarify the Standard.		

Organization	Yes or No	Question 5 Comment
The United Illuminating Company	No	Include a detailed example of an Inventory list. Allow for different means of maintaining the lists electronically, that is, as spreadsheets, or databases.
Response: Thank you for your comments. The Supplementary Reference is intended to help clarify the Standard, not add to the Requirements of the Standard. Maintaining your lists is a business practice that you make, spreadsheets and/or databases have not been precluded in the Standard or in any reference document.		
US Bureau of Reclamation	No	It is not reasonable to assert that a statistical analysis of survey data is reliability based justification for requiring specific maintenance intervals. The reference document admits that intervals varied widely. To assert a postage stamp interval does not account for other variables which optimize a specific maintenance program. That is not saying that the reference documents are worthless. Indeed it has many good suggestions. However, to impugn the maintenance programs in practice because they do not follow the "weighted average" is hardly scientific or credible. The reference document should analyze the maintenance programs from the stand point of the outages associated with those facilities. If a specific maintenance practice was shown to have compromised the performance of the facility and the reliability of the BES, then it would added to the statistical database of practices which would not be acceptable. Now the statistical analysis of the database would show that certain practices have consequences which impact reliability and a requirement can be constructed to disallow them.
Response: Thank you for your comments. FERC directed the SDT to set maximum time intervals between maintenance activities. The SDT recognized that different types of equipment, different generations of equipment, different failure modes of equipment and different versions of time-based maintenance had to be considered. The SDT agrees with the commenter that the Standard allows statistical analysis and performance-based maintenance allows an entity to create time intervals that could exceed any “weighted-averages” time-based intervals. The Supplementary Reference adds a section (9) to show how an entity can create a performance-based maintenance interval.		

Organization	Yes or No	Question 5 Comment
Public Service Enterprise Group ("PSEG Companies")	No	1. Suggest that figure 2 has a line of demarcation added that shows components specifically not part of the standard requirements. (Medium voltage bus). 2. Battery charger should be removed from table of components when a storage battery is used for the DC supply.
Response: Thank you for your comments. 1. The figures are intended to be general information and not to be inclusive of all situations. **2.** The modification of the Protection System definition from “station battery” to “station dc supply” is intended to include battery chargers, and Table 1-4 within draft PRC-005-2 includes activities specifically related to battery chargers.		
JEA	No	The Supplementary Reference document is critical in our current compliance environment to be approved as part of the standard and any standard modifications need to be kept in synchronization with the FAQ and the Supplementary Reference.
Response: Thank you for your comments. **1.** This document provides supporting discussion, but is not part of the Standard. The SDT intends that it be posted as a reference document, accompanying the S. As established in SDT Guidelines, the Standard is to be a terse statement of requirements, etc., and is not to include explanatory information like that included in the FAQ and Supplementary Reference. The Supplementary Reference and FAQ have been revised to make them consistent with the new version of PRC-005-2.		
Long Island Power Authority	No	1. There is no guidance on how to calculate the total number of components and thus, the percentages under different severity levels. FAQ provides some insight into how an entity can count components however; an example in the reference document will provide clarity. 2. Page 7 of the redline version of Supplemental Reference - bullet 1 under Maintenance Services, paragraph 2, it says “ If specific protection scheme components have demonstrated correct performance within specifications, the maintenance test time clock

Organization	Yes or No	Question 5 Comment
		is reset for those components. LIPA believes that resetting the time clock will make tracking difficult (unless entities have a sophisticated automated tool for tracking). Another option where an entity can take credit for a correct performance within specifications at the time of the maintenance cycle should be included.
Response: Thank you for your comments. 1. A definition of "Component" has been added to the draft Standard to provide guidance. The Standard and the Tables have also been revised throughout for clarity. **2.** The example cited is only offered as an option for entities that may wish to make use of observed real-time operations within their PSMP. An entity may, if desired, reset the time clock on a correct real-time occurrance. An entity does not have to "reset the time clock" if it chooses to maintain all of its components on a set schedule. The example given is merely one method to log a completed tripping action, which would alleviate the need to validate that same trip path. The SDT acknowledges that there are many ways to prove circuits; real-time switching or fault-clearing activities can be used but are not the only methods.		
Northeast Power Coordinating Council	No	1. There is no guidance on how to calculate the total number of components and thus, the percentages under different severity levels. FAQ provides some insight into how an entity can count components. 2. However; an example in the reference document will provide clarity. Page 7 of the redline version of Supplemental Reference - bullet 1 under Maintenance Services, paragraph 2 states " If specific protection scheme components have demonstrated correct performance within specifications, the maintenance test time clock is reset for those components." Resetting the time clock will make tracking difficult (unless entities have a sophisticated automated tool for tracking). Another option where an entity can take credit for a correct performance within specifications at the time of the maintenance cycle should be included.
Response: Thank you for your comments. 1. A definition of "Component" has been added to the draft Standard to provide guidance. The Standard and the Tables have also		

Organization	Yes or No	Question 5 Comment
been revised throughout for clarity. **2.** The example cited is only offered as an option for entities that may wish to make use of observed real-time operations within their PSMP. An entity may, if desired, reset the time clock on a correct real-time occurrance. An entity does not have to "reset the time clock" if it chooses to maintain all of its components on a set schedule. The example given is merely one method to log a completed tripping action, which would alleviate the need to validate that same trip path. The SDT acknowledges that there are many ways to prove circuits; real-time switching or fault-clearing activities can be used but are not the only methods.		
Northeast Utilities	No	There is no guidance on how to calculate the total number of components and thus, the percentages under different severity levels. FAQ provides some insight into how an entity can count components however; an example in the reference document will provide clarity.
Response: Thank you for your comments. A definition of "Component" has been added to the draft Standard to provide guidance. The Standard and the Tables have also been revised throughout for clarity.		
Tennessee Valley Authority	No	1. There needs to be a defined method of deferral when equipment can't be gotten out of service until a scheduled outage. 2. Give some examples of what "inputs and outputs that are essential to proper functioning of the Protection System" are. 3. a) Define what a "Control and Trip Circuit" is. 4. b) Is there one per relay? 5. c) Do I have to have a list of them in my work management system?
Response: Thank you for your comments. 1. "Grace periods" within the Standard are not measurable, and could lead to persistently increasing intervals. 2. Some examples of outputs may include but are not limited to: trip, initiate zone timer, initiate breaker fail. Some examples of input may include but are not limited to: breaker fail initiate, start timer. This cannot be an all-inclusive list as any given scheme could have many variations. In short, if your scheme requires a specific input to function properly then you must have that input		

Organization	Yes or No	Question 5 Comment
maintained; if your scheme has a specific output that must function then it must be maintained. If the input or output is used for a non-protective function (such as, but not limited to, Sequence-of-Events Recorder, alarm or indication) then it does not have to be maintained under this Standard. See Section 15.3 of the Supplementary Reference and FAQ II.2.L. 3. a) Circuitry needed for the correct operation of the protective relay. A definition of "Component" has been added to the draft Standard to provide guidance. See Section Section 15.3 of the Supplementary Reference. 4. b) This depends on your scheme and your relay. A definition of "Component" has been added to the draft Standard to provide guidance. **5.** c) The SDT believes that a PSMP that requires maintenance upon all of the circuits, and includes a check-off (list) system that accounts for all circuits being verified would suffice.		
American Electric Power	Yes	
American Transmission Company	Yes	
Arizona Public Service Company	Yes	
BGE	Yes	
Black Hills Power	Yes	
Constellation Power Generation	Yes	
Consumers Energy Company	Yes	

Organization	Yes or No	Question 5 Comment
Duke Energy	Yes	
Dynegy Inc.	Yes	
Entergy Services	Yes	
Exelon	Yes	
Great River Energy	Yes	
Hydro One Networks	Yes	
Manitoba Hydro	Yes	
MidAmerican Energy Company	Yes	
MRO's NERC Standards Review Subcommittee (NSRS)	Yes	
NERC Staff	Yes	
Pacific Northwest Small Public Power Utility Comment Group	Yes	
PacifiCorp	Yes	

Organization	Yes or No	Question 5 Comment
PNGC Power	Yes	
Progress Energy Carolinas	Yes	
ReliabilityFirst Corp.	Yes	
South Carolina Electric and Gas	Yes	
Southern Company Transmission	Yes	
The Detroit Edison Company	Yes	
We Energies	Yes	
Western Area Power Administration	Yes	
Y-W Electric Association, Inc.	Yes	
WECC	Yes	Compliance does agree with the clarity and the Supplementary Reference should be specially referenced where appropriate the Tables 1a, 1b, 1c and Attachment A that are included with the Standard. But this reference is not a part of the approved standard and there are no controls which prevent changes in the reference document that could impact the scope or intent of the standard. If the standard is approved with reference to the Supplementary Reference then future changes to the Supplementary Reference should not be allowed without due process. Only the version in existence at the time of approval of the

Organization	Yes or No	Question 5 Comment
		standard could be used to clarify or explain the standard.
Response: Thank you for your comments. The SDT intends that the Supplementary Reference document be updated as the Standard is revised to maintain its relevance to the application of the Standard. The Standards Committee has a formal process for determining whether to authorize posting a reference document with an approved standard. That process is posted on the Standard Resources web page – here is a link to the procedure: http://www.nerc.com/files/SC_Process_Approve_Supporting_References_Approved_10Mar08.pdf		
Nebraska Public Power District	Yes	Is this document considered part of the standard and may be referenced during audit and self-certification as an authentic source of information?
Response: Thank you for your comments. This document provides supporting discussion, but is not part of the Standard. The SDT intends that these be posted as reference documents, accompanying the Standard. The Standards Committee has a formal process for determining whether to authorize posting a reference document with an approved standard. That process is posted on the Standard Resources web page – here is a link to the procedure: http://www.nerc.com/files/SC_Process_Approve_Supporting_References_Approved_10Mar08.pdf		
Springfield Utility Board	Yes	SUB appreciates that Time Based, Performance Based, and Condition Based programs can be combined into one program. However it should be clear that a utility may include one, two or all three of these types of programs for each individual device type. Currently the language reads:"TBM, PBM, and CBM can be combined for individual components, or within a complete Protection System." The "and" requires all three to be combined if they are combined. SUB suggests the “and” be changed to "or". Language Change: "TBM, PBM, or CBM can be combined for individual components, or within a complete Protection System."
Response: Thank you for your comments. The SDT modified Requirement R1 of the Standard.		
FirstEnergy	Yes	We support the reference document and appreciate the SDT's hard work developing this

Organization	Yes or No	Question 5 Comment
		document. We offer the following suggestions for possible improvements: 1. The reference document should be linked in Section F of the standard. Otherwise it may be difficult for someone to navigate the NERC website in search of the document. 2. Section 2.2 - It would be helpful if a short discussion of the reasons for the changes to the definition of Protection System was included in this reference document. In addition, it would be beneficial to discuss what is included in "dc supply" components, such as "dc supplies include battery chargers which are required to be maintained per the Tables in PRC-005-2." 3. Section 8.1 - The fourth bullet which reads "If your PSMP (plan) requires more then you must document more." Should be removed. This is already covered in the sixth bullet which states "If your PSMP (plan) requires activities more often than the Tables maximum then you must document those activities more often."

Response: Thank you for your comments.

1. This issue may be a good idea. The Standards Committee has a formal process for determining whether to authorize posting a reference document with an approved standard. That process is posted on the Standard Resources web page – here is a link to the procedure: http://www.nerc.com/files/SC_Process_Approve_Supporting_References_Approved_10Mar08.pdf.
2. The reasons for the definition change are transitory and should not be in the Supplementary Reference document. The reasons may be found in the SAR for Project 2007-17. See Section 15.4 of the Supplementary Reference for discussion about batteries and dc supply.
3. The SDT disagrees with your assertion. The first cited example applies to the activities within your program, and the second applies to the intervals. These are related but separate. The fourth bullet in Section 8.1 has been revised to clarify.

6. The SDT has revised the "Frequently-Asked Questions" (FAQ) document which is supplied to address anticipated questions relative to the standard. Do you agree with these changes? If not, please provide specific suggestions for change.

Summary Consideration: Most commenters seemed to appreciate the information provided within the FAQ document. Many commenters asked whether the FAQ was part of the Standard, to which the SDT replied, "No." Several commenters also were concerned that the FAQ document may not be kept current with the Standard itself. There were assorted individual technical comments about the FAQ, to which the SDT responded. Several comments irrelevant to the FAQ were also offered; the SDT offered responses relevant to the comments.

Organization	Yes or No	Question 6 Comment
MEAG Power		No comment.
PPL Supply		No Comment.
Santee Cooper		No comment.
SERC Protection and Control Sub-committee (PCS)		The SERC PCS expresses no opinion on this question.
Indeck Energy Services	No	
San Diego Gas & Electric	No	
Consumers Energy	No	1. FAQ II.3A attempts to clarify the requirements of "Verify the proper functioning of the current and voltage signals necessary for Protection System operation from the voltage

Organization	Yes or No	Question 6 Comment
Company		and current sensing devices to the protective relays" suggesting that "simplicity can be achieved" by verifying that the protective relays are receiving "expected values." It concludes with a statement of the need to "ensure that all of the individual components are functioning properly ..." implying that just verifying "expected values" at the protective relay end of the circuit may be inadequate. 2. FAQ II.4D describes what is required for testing of aux relays to include, "that their trip output(s) perform as expected". Does that include timing tests? (Example - high speed ABB AR relays vs. standard AR relays). 3. The SDT responses to the Draft 1 comments regarding "grace periods" essentially says, "Absolutely not". However, FAQ IV.1.D reflects data retention requirements relative to an entities' program which includes a grace period!

Response: Thank you for your comments.

1. "Expected values" was intended to convey that the current and/or voltage sensing devices were functioning properly. The SDT intentionally left out any Requirement in the Standard that the values being read at the protective relays be within a specific tolerance because each entity may have valid rationale for tolerances at any level. To find a current or voltage value that is wrong would indicate that something in the voltage or current secondary delivery system is not functioning properly and needs corrective action. Typically an entity can review values measured at the relay and determine that the values are as expected and that the maintenance activity has been satisfied.
2. If an entity has designed a protection scheme which contains parts that need to function in a specific manner then those parts need to be routinely maintained to assure that they perform at that level. The SDT believes that Protection Systems exist at all levels of complexity and that some systems will be easier to test than others, but that all components that are necessary for the proper functioning of the Protection System must be maintained. In short, if an entity decided that specific parts were necessary for the proper operation of the Protection System then those parts need to be routinely maintained.
3. There is no "grace period" allowed by the Standard; a "grace period" is not measurable. That means that the intervals between the specified maintenance activities in the Standard cannot exceed those established within the Tables. However, many entities have built in "allowable extensions" to their intervals (thus creating "grace periods" within their own PSMP). In these particular PSMP's the total time allowed between the specified maintenance activities (including any allowable extensions or "grace periods") does not

Organization	Yes or No	Question 6 Comment
exceed the maximum allowed time interval established in the Standard. For example, an entity has in their PSMP that "…the electro-mechanical relays will be tested every 3 calendar years with a maximum allowable extension of 18 additional calendar months to allow for scheduling difficulties and unplanned emergencies." In this way the entity will be audited to their PSMP, they have added 50% time in the form of their own grace period and the maximum time between the specified maintenance activities does not exceed the time interval established in the Standard. Also see FAQ IV.2.H for additional discussion on this.		
Xcel Energy	No	1. As we commented on in the previous draft of the standard that proposed the Supplementary Reference and FAQ, we are concerned as to what role these documents will play in compliance/auditing. It is also unclear how these documents will be controlled (i.e. Revised and approved, if at all). 2. Inconsistencies have been identified between proposed standard and the documents (e.g. page 29 of FAQ example 1).
Response: Thank you for your comments. **1.** This document provides supporting discussion, but is not part of the Standard. The SDT intends that it be posted as a reference document, accompanying the Standard. As established in SDT Guidelines, the Standard is to be a terse statement of requirements, etc., and is not to include explanatory information like that included in the Supplementary Reference document. The FAQ and the Supplementary Reference documents have been revised to make them consistent with the new version of PRC-005-2. 1. The Standards Committee has a formal process for determining whether to authorize posting a reference document with an approved standard. That process is posted on the Standard Resources web page – here is a link to the procedure: http://www.nerc.com/files/SC_Process_Approve_Supporting_References_Approved_10Mar08.pdf **2.** Thank you. The FAQ has been revised to be consistent with the new version of the Standard.		
Nebraska Public Power District	No	1. FAQ 2.G, page 24 - NPPD believes system reliability will be decreased if an entity is considered non-compliant for exceeding a PSMP stated interval that is within the PRC-005-2 Maximum Maintenance Interval. Considering an entity non-compliant for such a situation will encourage establishment of intervals that only meet the minimum standard. There should be one standard interval that all entities must be monitored against. If an entity wants to perform maintenance more frequently, it should not be subject to non-

Organization	Yes or No	Question 6 Comment
		compliance if it misses its target but meets the Maximum Maintenance Interval in the standard. 2. There are definitions at the beginning of the FAQ that should be contained in the NERC definitions and not in an FAQ. Placing these in an approved definition will help avoid interpretation issues that would arise during future audits.
Response: Thank you for your comments. 1. The SDT believes that there are many reasons that would prompt an entity to have some intervals that are more frequent than those intervals established in the Standard (performance-based maintenance is but a single example). If an entity chooses to perform maintenance more often than the limits set within the Standard then it may do so. If an entity chooses to perform maintenance more often than the limits set within its own PSMP then it may do so. **2.** The SDT desires to conform to certain rules regarding this issue. If a term appears in the NERC Glossary then all Standards will have to conform to the definition established. If the terms are shown elsewhere, in the FAQ for example, then clarity can be achieved when the Standard is read. The SDT intends to help clarify by creating the two supporting reference documents, but not to restrict other Standards to the uses of some words that will inevitably be shared amongst Standards. The SDT has also moved several of these definitions to the Standard with the intent that they be part of only this Standard and not a general definition within the NERC Glossary of Terms.		
Progress Energy Carolinas	No	1. FAQ II.2.A: What degree of testing is required for a relay firmware upgrade? Complete commissioning tests? 2. FAQ V.1.A. There appears to be a typo in Example #1 for “Vented lead-acid battery with low voltage alarm connected to SCADA (level 2)”: Table 1b does not list any level 2 requirements. Rather, the table refers reader back to the Level 1 requirements. Same comment for Example #2 as well. 3. FAQ III.1.A: Project 2009-17 provides a response to a request for interpretation of the term “transmission Protection System” as related to PRC-004-1 and PRC-005-1. The interpretation addresses the boundaries of the transmission system. NERC should

Organization	Yes or No	Question 6 Comment
		investigate whether this same boundary should be defined within the new PRC-005-2. 4. Also, numerous potential boundary issues exist between entities which should be contemplated and addressed. See the examples below: a) Utility A may own equipment in Utility B's substation. Utility A contracts Utility B to perform maintenance on their equipment. However, the two utilities have different maintenance programs and intervals for the same types of equipment. Who is responsible for NERC compliance? Would Utility A be found in violation because their equipment is being maintained under Utility B's program which deviates from Utility A's maintenance basis? b) EMC protection is fed from a utility's instrument transformers. Who is responsible for validation of the relay inputs and testing of the instrument transformers? c) Utility-owned communication units (used for transfer trip or carrier blocking) are coupled to the utility's power line using customer-owned CCVTs. Who is responsible for maintenance and testing of these CCVTs? d) Utility A owns all equipment at one end of line (line terminal A) and Utility B owns all equipment at other end of line (line terminal B). Who is responsible for demonstrating the carrier blocking scheme or POTT scheme works correctly?

Response: Thank you for your comments.

1. Complete commissioning tests can be required by the entity. Commissioning tests are not specified within the Standard. The status of the relay should be that it is ready for use after the firmware upgrade. If the maintenance activities were performed that are specified within the Standard and its PSMP, then the entity may choose to reset the time clock for maintenance for that device.
2. The Tables within the Standard have been completely revised, and the FAQ revised to align.
3. When the interpretation (Project 2009-17) is approved, the SDT for PRC-005-2 will consider if the interpretation is appropriate for PRC-005-2 and make associated changes.

   a) The owner of the equipment is responsible for assuring that the equipment is maintained according to its PSMP. This is

Organization	Yes or No	Question 6 Comment
consistent with the concepts in the Functional Model. b) The owner of the equipment is responsible for assuring that the equipment is maintained according to its PSMP. c) The owner of the equipment is responsible for assuring that the equipment is maintained according to its PSMP. d) The owner of the equipment is responsible for assuring that the equipment is maintained according to its PSMP. The entities should coordinate on equipment that affects each other to assure that the equipment is tested in such a fashion that it complies with both entities' PSMP.		
Tennessee Valley Authority	No	If a relay is tested during a generator outage, what date is allowed to be used for compliance - actual test date or date equipment was returned to service? These are usually only a few weeks apart, but may be as much as three months different.
Response: Thank you for your comments. An entity's own records are used to judge compliance. The date placed on the evidence should be the date on which testing of the relevant Protection System component is completed.		
Northeast Utilities	No	Page 2 under Component definition, term "somewhat arbitrary" is used by the drafting team to address what constitutes a dc control circuit. Though the drafting team has provided entities with flexibility to define as per their methodologies, it is recommended to clearly determine "what constitutes a dc control circuit" since it will be used to determine compliance.
Response: Thank you for your comments. The SDT believes that if the circuit is needed for the Protection System to operate or function correctly, then that circuit must be maintained.		
South Carolina Electric and Gas	No	Question/Answer 4-C (Pg. 10 of FAQ) seems to indicate that by documenting breaker operations for fault conditions the table 1b requirements for control circuitry (Trip Coils and Auxiliary relays) can be satisfied. It is possible that even though a breaker successfully

Organization	Yes or No	Question 6 Comment
		operates for a fault condition one trip coil of a primary/backup design can be inoperable and "masked" by the good trip coil. Although it is likely that a faulty trip coil would be caught by monitoring of continuity it is not a certainty that both trip coils actually operated to clear a fault (example-mechanical binding)
Response: Thank you for your comments. The SDT agrees. While a successful trip operation can fulfill requirements of the Standard, it is useful only for the trip paths for which successful operation was demonstrated and documented.		
BGE	No	The FAQ is a very helpful document. A few more changes would be beneficial. See comments regarding manufactures' advisories and R1.1 under section 7 below. It is our recommendation that manufacturers service advisories not be an implied part of the PMSP requirements and that the expectations for R1.1 be more explicitly described in the FAQ.
Response: Thank you for your comments. The Supplementary Reference and the FAQ are not a part of the Standard. The intent of the SDT is that the documents help provide clarity, not to imply additional maintenance. The required minimum maintenance activities are listed in the Standard. Requirement R1 and the tables have been extensively revised.		
American Transmission Company	No	The FAQs are helpful, however, with the revised standard as written; ATC has issues with the answers provided. Please refer to Question #7 for areas of concern.
Response: Thank you for your comments. The Standard and the Tables have been revised to add clarity. The FAQ and the Supplementary Reference documents have been revised to make them consistent with the new version of PRC-005-2. Please see our responses to your comments in Question 7.		
MRO's NERC Standards Review Subcommittee	No	The FAQs are helpful, however, with the revised standard as written, The NSRS has issues with the answers provided. Please refer to Question #7 for areas of concern.

Organization	Yes or No	Question 6 Comment
(NSRS)		
Response: Thank you for your comments. The Standard and the tables have been revised to improve clarity. The FAQ and the Supplementary Reference documents have been revised to make them consistent with the new version of PRC-005-2. Please see our responses to your comments in Question 7.		
Constellation Power Generation	No	The PT/CT testing section is implying that the testing must be completed while energized, which is counter to industry practice at generation facilities. Leeway should be given to the entities to devise their own methods for testing voltage and current sensing devices and wiring to the protection system.
Response: Thank you for your comments. The required minimum maintenance activities are listed in the Standard. The intent of the cited section is to provide examples of how an entity <u>might</u> perform the testing. Any examples listed in either of the supporting documents should be looked upon as suggestions; these suggestions are not considered to be a complete list of the methods available. To the contrary, the Standard and the supporting documents were written considering that there are many ways to achieve a good test. Leeway is certainly available in how an entity complies with the Standard as the maintenance activities generally specify "what" must be achieved but not "how" an entity achieves it. Please see FAQ II.3.D.		
Pepco Holdings, Inc. - Affiliates	No	1. The three month inspection interval for communication equipment mentioned in FAQ II 6 B should be extended to 12 - 18 months (see response to Question #1). 2. In addition, the example used in this section should address what is expected for ON-OFF carrier systems. Checking that the equipment is free from alarms and still powered up does not seem sufficient to verify functionality. The FAQ states that the concept should be that the entity verifies that the communication equipment...is operable through a cursory inspection and site visit. However, unlike FSK schemes where channel integrity can easily be verified by the presence of a guard signal, ON-OFF carrier schemes would require a check-back or loop-back test be initiated to verify channel integrity. If the carrier set was not equipped with this feature, verification would

Organization	Yes or No	Question 6 Comment
		require personnel to be dispatched to each terminal to perform these manual checks.
Response: Thank you for your comments. 1. The SDT believes that the 3-month interval is proper for unmonitored communications systems. **2.** As you suggest, this funcitionality would normally be verified by a manual or automatic checkback system, and, even then, a station visit would be necessary if alarms are not provided. Where such equipment is not available, a station visit would be necessary.		
Public Service Enterprise Group ("PSEG Companies")	No	This is a very useful document and provides a good source of additional information; there are some cases where it could be interpreted as a standard requirement that can lead to confusion if conflicts exist. For example, the group by monitoring level example V.1.A shown on page 29 describes a level 2 partial monitoring as circuits alerting a 24Hr staffed operations center, page 38 shows level 2 monitoring as detected issues are reported daily. The actual standard table 1b level 2 monitor describes alarms are automatically provided daily to a location where action can be taken for alarmed failures within 1 day or less. This is listed as a supplemental reference document in the standard. The FAQ document "supports" the standard but is or is not an official interpretation tool, or if it is state as such.
Response: Thank you for your comments. The FAQ provides supporting discussion, but is not part of the Standard. The SDT intends that it be posted as a reference document, accompanying the Standard. As established in SDT Guidelines, the Standard is to be a terse statement of requirements, etc., and is not to include explanatory information like that included in the FAQ.		
The United Illuminating Company	No	What actions are taken if the owner can not perform a specific activity elaborated on the tables due to the design of the equipment? Is the owner in non-compliance? Must the owner only accept equipment solutions that allow the maintenance activities elaborated in the standard to be performed?

Organization	Yes or No	Question 6 Comment
Response: Thank you for your comments. The SDT is not aware of any activities that cannot be performed as you cite.		
JEA	No	Yes the FAQ is also a very important document to be approved along with the standard. There must be a way to have the standard and the FAQ go hand-in-hand or the standard must be revised to include much of the FAQ.
Response: Thank you for your comments. The FAQ provides supporting discussion, but is not part of the Standard. The SDT intends that it be posted as a reference document, accompanying the Standard. As established in SDT Guidelines, the Standard is to be a terse statement of requirements, etc., and is not to include explanatory information like that included in the Supplementary Reference and the FAQ. The FAQ and the Supplementary Reference documents have been revised to make them consistent with the new version of PRC-005-2. The Standards Committee has a formal process for determining whether to authorize posting a reference document with an approved standard. That process is posted on the Standard Resources web page – here is a link to the procedure: http://www.nerc.com/files/SC_Process_Approve_Supporting_References_Approved_10Mar08.pdf		
American Electric Power	Yes	
Arizona Public Service Company	Yes	
Black Hills Power	Yes	
Duke Energy	Yes	
Dynegy Inc.	Yes	

Organization	Yes or No	Question 6 Comment
Entergy Services	Yes	
Exelon	Yes	
Great River Energy	Yes	
Hydro One Networks	Yes	
Long Island Power Authority	Yes	
Manitoba Hydro	Yes	
MidAmerican Energy Company	Yes	
NERC Staff	Yes	
Northeast Power Coordinating Council	Yes	
Pacific Northwest Small Public Power Utility Comment Group	Yes	
PacifiCorp	Yes	
PNGC Power	Yes	

Organization	Yes or No	Question 6 Comment
ReliabilityFirst Corp.	Yes	
Southern Company Transmission	Yes	
Springfield Utility Board	Yes	
The Detroit Edison Company	Yes	
We Energies	Yes	
Y-W Electric Association, Inc.	Yes	
Ameren	Yes	1) Is this document considered part of the standard? We expect to use it as a reference in developing our PSMP, during audits, and for self-certification as an authentic source of information. It is also unclear how this document will be controlled (i.e. Revised and Approved, if at all). 2) The FAQ needs to be aligned with the tables. The FAQ also contains a duplicate decision tree chart for DC Supply. The FAQ contains a note on the Decision tree that reads, "Note: Physical inspection of the battery is required regardless of level of monitoring used", this statement should be placed on the table itself, and should include the word quarterly to define the inspection period. 3) We appreciate the SDT providing this valuable reference.

Response: Response: Thank you for your comments.

1. The FAQ provides supporting discussion, but is not part of the Standard. The SDT intends that it be posted as a reference document,

Organization	Yes or No	Question 6 Comment
accompanying the Standard. As established in SDT Guidelines, the Standard is to be a terse statement of requirements, etc., and is not to include explanatory information like that included in the Supplementary Reference and the FAQ. The FAQ and the Supplementary Reference documents have been revised to make them consistent with the new version of PRC-005-2. The Standards Committee has a formal process for determining whether to authorize posting a reference document with an approved standard. That process is posted on the Standard Resources web page – here is a link to the procedure: http://www.nerc.com/files/SC_Process_Approve_Supporting_References_Approved_10Mar08.pdf 2. The FAQ has been revised to make it consistent with the new version of PRC-005-2. The decision trees were removed. 3. Thank you.		
Western Area Power Administration	Yes	Clarification 1) FAQ, page 36, Control Circuit Monitor Level Decision Tree: It's not clear if the note on Level 1 device operation is required for Level 3 monitoring.
Response: Thank you for your comments. The Standard and Tables have been extensively revised. The FAQ has been revised to make it consistent with the new version of PRC-005-2. The decision trees were removed from the FAQ.		
WECC	Yes	Compliance does agree with the clarity. The FAQ answers should be referenced specifically to the Standard and the Supplementary Reference to further understand those two documents. However, endorsement of the Standard should not imply endorsement of the FAQ and vice versa.
Response: Thank you for your comments.		
FirstEnergy	Yes	We support the FAQ document and appreciate the SDT's hard work developing this document. The reference document should be linked in Section F of the standard. Otherwise it may be difficult for someone to navigate the NERC website in search of the document.
4. **Response:** Thank you for your comments. The Standards Committee has a formal process for determining whether to authorize		

Organization	Yes or No	Question 6 Comment
		posting a reference document with an approved standard. That process is posted on the Standard Resources web page – here is a link to the procedure: http://www.nerc.com/files/SC_Process_Approve_Supporting_References_Approved_10Mar08.pdf If approved as a permanent reference to a standard, then on the "Reliability Standard" web page, there will be a link (in the same cell as the link to the standard and its archive) to any reference documents approved for posting with the standard.

7. If you have any other comments on this Standard that you have not already provided in response to the prior questions, please provide them here.

Summary Consideration: Comments were offered on virtually every aspect of the draft Standard. Many of these comments resulted in changes to the Standard. The Tables were commented on heavily, and they were completely revised in response. Many commenters were concerned about not having provision for a "grace period," and the SDT responded that this was not allowable. "100% compliance" was also a concern, and the SDT responded that there was not a means of permitting some level of non-conformance without being also non-compliant.

Organization	Question 7 Comment
GDS Associates	Definition of Terms Used in the Standard. Protection System Maintenance Program 1. Monitoring. Concerned about the interpretation of this activity description 2. Upkeep. Not sure about how this activity will be enforced – A. Introduction. 4.2. Facilities. 3. The applicability does not address the current issues regarding radial + load serving only situation when Protection System not designed to provide protection for the BES. Standard should clearly state this exemption. B. Requirements. 4. 1.1. The standard does not provide guidance in how to identify the components of a transmission Protection System (tPS). See prior comment referring to the case of a radial load serving transmission topology. 5. 1.3. Requirement should read "For each identified Protection System component from Requirement 1, part 1.1, include all maintenance activities listed in PSMP and specified in Tables 1a, 1b, or 1c associated with the maintenance method used per

Organization	Question 7 Comment
	Requirement 1, part 1.2." 6. 1.4. This requirement should be eliminated since already included in Table 1a and covered through Requirement 1, part 1.3. 7. 4.3. Footnote 3 shall be eliminated since duplicates footnote 2 – C. Measures 8. M1. The added wording in the Protection System definition, requirements and measures with respect to the inclusion of the "associated circuitry from the voltage and current sensing devices" and control circuitry "through the trip coil(s) of the circuit breakers or other interrupting devices" seem right but a bit excessive under current circumstances (form of the standard). The standard should clearly specify how the maintenance program will address the verification, monitoring, etc. of the actual wiring and the trip coils. We suggest that the wording of the standard to reflect that the maintenance activities on the wiring will be conducted in a visual fashion without implying activities that require disconnecting the primary equipment. 9. We recommend to change the Protection System definition to read "up to the trip coils(s)" instead the word "through" (see comment on the definition as well). We consider that the gain in reliability by pursuing a thorough maintenance program that require to take primary equipment out of service (which in many instances will lead to the entire substation being put out of service) cannot counterweight the sole purpose of the standard and the economics emerging from this program.

Response: Thank you for your comments.

1. The SDT is unable to determine the nature of your concern. "Monitoring" is used within PRC-005-2 only as discussed in the new Table 2.
2. The SDT has removed "Upkeep" from the PSMP definition in response to your comment.
3. This is an issue for your regional BES definition.

Organization	Question 7 Comment
4. The SDT has extensively revised Requirement R1 and its sub-requirements. 5. The SDT has extensively revised Requirement R1 and its sub-requirements. 6. The SDT has removed Requirement R1, part 1.4, in consideration of your comment. 7. The footnotes have been removed. 8. The SDT is not specifying the means of achieving requirements. This allows entities the flexibility to determine their own optimal methods. 9. The SDT considers that the electrical trip coils are an integral portion of the dc control circuit, and therefore must be exercised.	
Western Area Power Administration	1) Standard, Page 4, R 4.3: Is the utility free to define its own "acceptable limits"? 2) Standard, Page 4, R 4.3: Must the "acceptable limits" be stated in the PSMP? 3) Standard, Page 4, Footnotes 2 and 3 are the same. 4) Attachment A says we can go to a performance based program; does this apply to every part of the standard? In other words, does this apply to component testing, functional testing, etc., and do we define the intervals of the test. That is, do we determine how long we test the sample of at least 30 units that Attachment A discusses?
Response: Thank you for your comments. 1. As "acceptable limits" may vary with the specific application, the entity is expected to determine appropriate acceptable limits. 2. There is no requirement within the draft Standard for an entity to specify the acceptable limits within its own PSMP. 3. The footnotes have been removed. 4. The draft Standard allows entities to implement a performance-based program for all component types except batteries if they have appropriate populations. Attachment A specifies that the entity "Maintain the components in each segment according to the time-based maximum allowable intervals established in Tables 1-1through 1-5 until results of maintenance activities for the segment are available for a minimum of 30 individual components of the segment." After that period, the entity may shift to the performance-based program for the entire segment.	

Organization	Question 7 Comment
Ameren	1) We commend the SDT for developing a generally clear and well documented second draft. The SDT considered and adopted many industry comments from the first draft. It generally provides a well reasoned and balanced view of Protection System Maintenance, and good justification for its maximum intervals. Ameren generally agrees that this second draft will be beneficial to BES reliability, but several inconsistencies, unclear items, and a couple issues need to be addressed before we will be able to support it. 2) Facilities Section 4.2.1 "or designed to provide protection for the BES" needs to be clarified so that it incorporates the latest Project 2009-17 interpretation. The industry has deliberated and reached a conclusion that provides a meaningful and appropriate border for the transmission Protection System; this needs to be acknowledged in PRC-005-2 and carried forward. 3) We are concerned over R1.1, where all components must be identified, without a definition for the word component or the granularity specified. While the FAQ gives a definition, and allows for entity latitude in determining the granularity, the FAQ is not part of the standard. Certainly this could confuse an entity or an auditor and lead to much wasted work and / or violations for unintended or insignificant issues. We suggest that the FAQ definitions be included within the standard. 4) Implementation of the PSMP must coincide with the beginning of a calendar year. 5) Generating Plant system-connected Station Service transformers should not be included as a Facility because they are serving load. Omit 4.2.5.5 from the standard. There is no difference between a station service transformer and a transformer serving load on the distribution system. This has no impact on the BES, which is defined as the system greater than 100 kV. 6) The term "maintenance correctable issue" used in Requirement 4 seems to be at odds with the definition given for it. It seems that an issue that cannot be resolved by repair or calibration during the maintenance activity would be a maintenance non-correctable issue. Also, in Requirement 4, the term "identification of the resolution" is ambiguous. Suggested changes for Requirements 4 and 4.1 are: "R4. Each Transmission Owner, Generator Owner, and Distribution Provider shall implement its PSMP, and resolve any performance problems as follows: 4.3 Ensure either that the components are within acceptable parameters at the conclusion of the maintenance activities or initiate actions to replace the component or restore its performance to within acceptable parameters."

Organization	Question 7 Comment
Response: Thank you for your comments. 1. Thank you. 2. When the interpretation (Project 2009-17) is approved, the SDT for PRC-005-2 will consider if the interpretation is appropriate for PRC-005-2 and make associated changes. 3. Requirement R1 has been extensively revised, and the SDT has added a definition of "Component" and "Component Type" to the draft Standard. The SDT's intent is that this definition will be used only in PRC-005-2, and thus will remain with the Standard when approved, rather than being relocated to the Glossary of Terms. 4. The SDT Guidelines, which were endorsed by the NERC Standards Committee in April 2009, establishes that proposed effective dates "must be the first day of the first calendar quarter after entities are expected to be compliant." The Implementation Plan is in accordance with these guidelines. 5. The "load" being served by the station service transformer may be essential to operation of the generating plant, and therefore is not the same as general distribution system load. Therefore, the SDT believes that these system components must remain within the Applicability section of the Standard. 6. The definition of "maintenance correctable issue" is consistent with the way it is used within the Standard.	
PPL Supply	1. For applicability to generators, the responsibility for a maintenance program will usually rest with the plant operator when the operator and plant owner(s) are different entities. Consider changing the applicability as it applies to the generator in such situations. 2. Time-based frequency should allow for flexibility; i.e. engineering analysis should allow the entity to exceed the intervals noted in the table. An engineering evaluation that defines a test interval differently than those intervals prescribed in the table should allow an entity to build a program with different intervals. 3. A Grace Period should be defined. This allows a tolerance window to allow for unforeseen occurrences. A grace period would allow for some schedule flexibility and reduce the number of reports to the regulator for exceeding an interval by a reasonable about. 4. The implementation plan for this revision should take into account that a generator outage may be

Organization	Question 7 Comment
	required to implement a new maintenance frequency. The implementation plan should account for outage time, especially nuclear plants that have extended operating cycles. 5. Table 1b Protective Relays Level 2 Monitoring Attributes includes input voltage or current waveform sampling three or more times per power cycle. No further guidance is provided in the reference documents. If this sampling rate is not provided in the specification by the manufacturer, what can the entity use to demonstrate that the attribute is satisfied? Please provide additional guidance. 6. Consider numbering the tables to improve cross-referencing the entries in program documentation. This will allow entities to reference in program documents exactly which activities are being implemented in accordance with the standard. 7. Requirement 1.1 states, "Identify all Protection System components." This is too broad and must be clarified.

Response: Thank you for your concern.

1. The Generator Owner, as defined within V5 of the NERC Functional Model, includes, "Design and authorize maintenance of generation plant protective relaying systems…" No maintenance activities are assigned to the Generation Operator within the Functional Model.
2. Requirement R3 and Attachment A provide the framework and requirements to develop and implement a performance-based maintenance program as you suggest.
3. "Grace periods" within the Standard are not measurable, and would probably lead to persistently increasing intervals. However, an entity may establish an internal program with grace-period allowance, as long as the entire program (including grace periods) does not exceed the intervals within the Standard.
4. The Implementation Plan has been revised in consideration of your comment.
5. This attribute is only relevant to microprocessor-based relays; no other technology possesses this attribute. The entity should contact the manufacturer to obtain this information.
6. The Tables have been completely revised in consideration of your comment.
7. Requirement 1, part 1.1 has been modified to state, "Address all Protection System component types."

Organization	Question 7 Comment
Consumers Energy Company	In the Standard, Footnote 2 and Footnote 3 are identical. We presume that some information has been omitted. We do not agree that Footnotes are an appropriate method of providing information that is important to the application of the Standard. Important information should be provided within the standard text.
Response: Thank you for your comments. The footnotes have been removed.	
Nebraska Public Power District	1. 4.2.5.1 (And elsewhere in the standard) Please define auxiliary tripping relays. 2. 4.2.5.5 Do station "system connected" service transformers that do not supply house load for the generating unit, other than during start up or emergency conditions, fall under this clause? If so, can these transformers be eliminated if the house load can be back-fed from "generator connected" service transformer switchgear? What if there are redundant "system connected" feeds? 3. R1 1.4 Clarification requested. This wording would suggest all battery activities fall under Table 1.a. exclusively. 4. R4 4.3 Does initiation of activities require documentation, or is inclusion of "initiation" in the testing procedure sufficient evidence? 5. Tables 1b &1c: Suggestion: If at all possible, combine and simplify. The number of sub clauses and nuances that are being described in these sections (with little change to interval or procedures for that matter) is overwhelming. These two tables are setting RE's and System Owners up for making errors. Implementation and auditability should be the focus of this standard, SIMPLIFY. 6. SPS - Does the output signal need to be verified, or does the actual expected action need to be verified. Actual expected action would affect electrical generation production for NPPD's SPS.
Response: Thank you for your comments. 1. Please see FAQ II.4.C, II.4.D, II.4.E, II.4.F, II.4.G, and Sections 2.4 and 15.3 of the Supplementary Reference document for discussion regarding auxiliary relays. 2. The "load" being served by the station service transformer may be essential to operation of the generating plant, and therefore is not	

Organization	Question 7 Comment
the same as general distribution system load. Therefore, the SDT believes that these system components must remain within the Applicability section of the Standard. This is not affected by redundancy. 3. The Tables have been completely revised in consideration of your comment. Please see the new Table 1-4 for these activities. 4. As indicated in Measure M4, the SDT believes that documentation such as work orders, etc., is necessary. 5. The Tables have been completely revised. **6.** The draft Standard requires that the expected action is verified. This may be conducted in overlapping segments, and a simulation may be sufficient to verify in some cases.	
CenterPoint Energy	CenterPoint Energy believes the proposed Standard is overly prescriptive and too complex to be practically implemented. An entity making a good faith effort to comply will have to navigate through the complexities and nuances, as illustrated by the extensive set of documents the SDT has provided in an attempt to explain all the requirements and nuances. The need for an extensive "Supplementary Reference Document" and an extensive "Frequently Asked Questions Document", in addition to 13 pages of tables and an attachment in the standard itself, illustrate that the proposal is too prescriptive and complex for most entities to practically implement. CenterPoint Energy is opposed to approving a standard that imposes unnecessary burden and reliability risk by imposing an overly prescriptive approach that in many cases would "fix" non-existent problems. To clarify this point, CenterPoint Energy is not asserting that maintenance problems do not exist. However, requiring all entities to modify their practices to conform to the inflexible approach embodied in this proposal, regardless of how existing practices are working, is not an appropriate solution. Among other things, requiring entities to modify practices that are working well to conform to the rigid requirements proposed herein carries the downside risk that the revised practices, made solely to comply with the rigid requirements, degrade reliability.
Response: Thank you for your comments. The SDT has extensively revised the Tables and the Standard in efforts to simplify and remove complexity. FERC Order 693 and the approved SAR for this project directed the SDT to establish both maximum maintenance intervals and minimum maintenance activities within the revised Standard.	
BGE	1. Comment 7.1. The standard, FAQs, and supplementary reference all make references to upkeep

Organization	Question 7 Comment
	and include in "upkeep" changes associated with manufacturer's service advisories. The FAQs include statements that the entity should assure the relay continues to function after implementation of firmware changes. This statement is uncontestable as general principle but is problematic in its inclusion in an enforceable standard because there is no elaboration on what the standard expects, if anything, as demonstration of an entity's execution of this responsibility. PRC-005-2 appropriately focuses on implementation of time-based, condition based, or performance based PSMPs; but addressing service advisories does not fit well with any of these ongoing preventive maintenance activities. It is instead episodic, more like commissioning after upgrades, or corrective maintenance work generated by condition-based alarms or anomalies discovered by analyzing operations. The standard appropriately steers clear of imposing requirements for these latter responsibilities as long as execution of an ongoing maintenance program is being demonstrated. BGE recommends that implied inclusion of service advisories should be removed from the standard and supporting documents. 2. Comment 7.2 R1.1 Requires the identification of all protection systems components. But it provides no elaboration on the level of granularity expected or acceptable means of identification. It is unlikely that the SDT expected the unique identification of every discrete component down to individual test switches or dc fuses. In the case of current transformers, several of which, or even dozens of which may be connected to a single relay there is no apparent reliability benefit that comes from indentifying them uniquely so long as it is proven that a protection system is receiving accurate current signals from the aggregate connection. (It may be argued that the revised definition of "protection systems" eliminates the need to include CT's under R1.1 but that's just one interpretation.) Some discrete components of communication systems may exist in an environment that is not owned by or known to the protection system owner. Additionally all protection system components may be indentified in documents that are current and maintained but not in the form of a specific searchable list that is limited to components that are within the scope of PRC-005. Examples may be indexed engineering drawings that indentify relays and other components for each protection systems or scanned relay setting and calibration documents that are current but not attached to searchable metadata. It is unclear whether or not these would be considered acceptable identification meeting R1.1. If they are not then the implementation plan for R1 is in all probability unachievable. BGE requests that the SDT provide more elaboration on R1.1 in the standard and in

Organization	Question 7 Comment
	the supporting documents. 3. Comment 7.3 For clarity footnote 1 to R1 which excludes devices that sense non-electrical signals should explicitly say that the auxiliary relays, lockout relays and other control circuitry components associated with such devices are included. The matter is well-addressed in the FAQ's but could easily be misunderstood if not included here.
Response: Thank you for your comments. 1. "Upkeep" has been removed from the definition of Protection System Maintenance Program, and from the Supplementary Reference and FAQ documents. 2. Requirement R1, part 1.1, has been revised to state, "Address all Protection System component types." 3. The SDT believes that these components are clearly included within the scope of dc control circuits.	
WECC	1. Compliance believes it will be difficult to demonstrate compliance when an entity chooses Condition Based Level 2 or Level 3 maintenance as the details of the requirements are still open to interpretation. The FAQ has answers to specific questions that are multiple choices. 2. Breaking down this standard into this level of granularity requires supplementary documents to understand it and for auditors to understand how to determine compliance. Industry standards are specific to equipment types and should be allowed to set intervals and maintenance tasks rather than a one-size fitting all approach.
Response: Thank you for your comments. 1. The Tables have been completely revised to clarify the monitoring attributes and related intervals and activities. 2. FERC Order 693 and the approved SAR for this project directed the SDT to establish both maximum maintenance intervals and minimum maintenance activities within the revised Standard.	
Constellation Power Generation	1. Constellation Power Generation does not agree with the changes to Voltage and Current Sensing inputs to protective relays in Table 1a. It is inferring that the only way to complete testing on these components to satisfy NERC is to complete online testing, which is dangerous and does not improve

Organization	Question 7 Comment
	the reliability of the BES. In fact, it can be argued that it decreases the reliability of the BES. The verbiage should be changed back to what was originally proposed to allow for offline testing. 2. Furthermore, Constellation Power Generation does not agree with several of the inclusions of generator Facilities in this standard. For example, in 4.2.5.1, the proposed standard looks to include any components that can trip the generator. At a nuclear facility, this could include protection of motors at the 4 kV level that may trip the generator due to NRC regulated safety issues. This should not fall under NERC jurisdiction. 3. The inclusion of station service transformers is another inclusion that should not be in this standard. There is no difference between a station service transformer and a transformer serving load on the distribution system. This has no impact on the BES, which is defined as the system greater than 100 kV. 4. Additionally, CPG has concerns regarding the vague language of R1.1, which requires the identification of all protection systems components. It provides no elaboration on the level of granularity expected or acceptable means of identification. It is unlikely that the SDT expected the unique identification of every discrete component down to individual test switches or dc fuses. In the case of current transformers, several of which, or even dozens of which may be connected to a single relay there is no apparent reliability benefit that comes from identifying them uniquely so long as it is proven that a protection system is receiving accurate current signals from the aggregate connection. (It may be argued that the revised definition of "protection stems" eliminates the need to include CT's under R1.1 but that's just one interpretation.) Some discrete components of communication systems may exist in an environment that is not owned by or known to the protection system owner. Additionally all protection system components may be identified in documents that are current and maintained but not in the form of a specific search-able list that is limited to components that are within the scope of PRC-005. Examples may be indexed engineering drawings that identify relays and other components for each protection systems or scanned relay setting and calibration documents that are current but not attached to search-able meta data. It is unclear whether or not these would be considered acceptable identification meeting R1.1. If they are not then the implementation plan for R1 is in all probability unachievable. 5. CPG requests that the SDT provide more elaboration on R1.1 in the standard and in the supporting

Organization	Question 7 Comment
	documents. In that vein, to clarify footnote 1 to R1 which excludes devices that sense non-electrical signals, it should explicitly say that the auxiliary relays, lockout relays and other control circuitry components associated with such devices are included. The matter is well-addressed in the FAQ's but could easily be misunderstood if not included here. 6. Lastly, Constellation Power Generation would like to voice concern over the expedited process in which this standard is being developed. Voting within a week of submitting comments does not leave enough time for the drafting team to thoroughly vet through the issues and identify much needed changes, let alone implement them.
Response: Thank you for your comments. 1. The intent of the cited section is to provide examples of how an entity might perform the testing. Any examples listed in either of the supporting documents should be looked upon as suggestions; these suggestions are not considered to be a complete list of the methods available. To the contrary, the Standard and the supporting documents were written considering that there are many ways to achieve a good test. Leeway is certainly available in how an entity complies with the Standard as the maintenance activities generally specify "what" must be achieved but not "how" an entity achieves it. Please see FAQ II.3.D. 2. FAQ III.2.A specifies that relays that trip breakers serving station auxiliary loads such as fans, pumps, and fuel handling equipment need not be included in the program even if loss of those loads could result in the tripping of the generator. 3. The "load" being served by the station service transformer may be essential to operation of the generating plant, and therefore is not the same as general distribution system load. Therefore, the SDT believes that these system components must remain within the Applicability section of the Standard. 4. Requirement R1, part 1.1, has been revised to state, "Address all Protection System component types." 5. Requirement R1, part 1.1, has been revised to state, "Address all Protection System component types." The SDT believes that the components associated with devices that sense non-electrical signals are clearly included within the scope of dc control circuits. 6. This Standard has been designated for an expedited process in order to achieve approval in the minimum time possible.	
Pepco Holdings, Inc. - Affiliates	Dates of the Supplemental Reference Documents in Section F of the standard need to be updated. 1. The word "calendar" is used widely to define month and year intervals. Sometimes causes

Organization	Question 7 Comment
	confusion, need definition/examples. 2. The level 2 table regarding Protection Station dc supply states that level 1 maintenance activities are to be used, but then goes on to give a list of Maintenance Activities that don't match those in level 1. Which activities shall we use? Same situation for Station DC Supply (battery is not used) where the 18 month interval is missing. 3. Req 1.1: "All Components" wording should say something like all components covered in our plan
Response: Thank you for your comments. 1. Section 8.4 of the Supplementary Reference document provides an example to assist in this determination. A "calendar year" is a single number year on the Gregorian calendar; a calendar month is any one of the twelve months within a single calendar year. 2. The Tables have been rearranged and considerably revised to improve clarity. Please see new Table 1-4. 3. Requirement R1, Part 1.1, has been revised to state, "Address all Protection System component types."	
SERC Protection and Control Sub-committee (PCS)	1. Descriptors in the "type of the protection system component" column need to be consistent between 1A, 1B and 1C. 2. Also, in the tables, please clarify "complete functional trip test" for UVLS and UVLS trip tests since the breaker is not being tripped. Facilities Section 4.2.1 "or designed to provide protection for the BES" needs to be clarified so that it incorporates the latest Project 2009-17 interpretation. The industry has deliberated and reached a conclusion that provides a meaningful and appropriate border for the transmission Protection System; this needs to be acknowledged in PRC-005-2 and carried forward. 3. We commend the SDT for developing such a clear and well documented second draft. The SDT considered and adopted many industry comments on the first draft. It generally provides a well reasoned and balanced view of Protection System Maintenance, and good justification for its maximum intervals. The SERC Protection & Control Subcommittee generally agrees that this second draft will be beneficial to BES reliability.

Organization	Question 7 Comment
Response: Thank you for your comments. 1. The Tables have been rearranged and considerably revised to improve clarity. 2. The Tables have been rearranged and considerably revised to improve clarity. Please see new Table 1-5. 3. Thank you for your comment.	
Dynegy Inc.	For protection system component verification, flexibility is needed subsequent to a system event to allow the analysis of a protection system operation to be utilized as a protection system component verification. We believe this flexibility is needed and should be incorporated in Requirement R4.
Response: Thank you for your comments. Operational results, if desired by an entity, MAY be used to meet maintenance requirements to the degree that they verify, etc., the relevant performance. The entity must determine if their use is effective.	
MidAmerican Energy Company	1. From the compliance registry criteria for generator owner/operator and the language in 4.2.5.3 it is implied that the intent is that protection systems for individual generators less than 20 MVA would not be covered by PRC-005. To make this clear in the PRC-005-2 standard, the following footnote to section 4.2.5.3 is recommended: Protection systems for individual generating units rated at less than 20 MVA in aggregated generation facilities are not included within the scope of this standard. The Request for Interpretation of a Reliability Standard submitted March 25, 2009 indicates that a protection system is only subject to the NERC standards if the protection system interrupts the BES and is in place to protect the BES. The following changes are recommended to clarify this in the standard: A.3. Purpose: To ensure all transmission and generation Protection Systems protecting and affecting the reliability of the Bulk Electric System (BES) are maintained. A.4.2.1. Protection Systems applied on, or and designed to provide protection for the BES.B.R1. Each Transmission Owner, Generator Owner, and Distribution Provider shall establish a PSMP for its Protection Systems that use measurements of voltage, current, frequency and/or phase angle to determine anomalies and to trip a portion of the BES and that are applied on, or and are designed to

Organization	Question 7 Comment
	provide..... 2. FERC Order 693 includes the directive that "testing of a protection system must be carried out within a maximum allowable interval that is appropriate to the type of the protection system and its impact on the reliability of the Bulk-Power System". If unanticipated conditions (e.g. force majeure) of the bulk-power system do not allow outages to complete protection system maintenance as required by the standard without compromising the reliability of the system delay of the particular maintenance activity should be allowed. This provision should be included in the standard in R4.
Response: Thank you for your comments. 1. This is an issue for your regional BES definition. The SDT has drafted the Standard to apply to all NERC entities with due regard for the applicable BES definition. 2. "Grace periods" within the Standard are not measurable, and would probably lead to persistently increasing intervals. However, an entity may establish an internal program with grace-period allowance, as long as the entire program (including grace periods) does not exceed the intervals within the Standard.	
Southern Company Transmission	1. General FAQ1) Attached is an elementary drawing showing a typical transmission line relay protection scheme utilizing SEL-351S and SEL-321 microprocessor relays. Does this qualify as partially monitored control circuitry? See pdf file Control Elementary_1-07-13 & Control Elementary_2-07-13in email documentation sent to Al McMeekin. If not, and this is an unmonitored circuit, what would be the appropriate maintenance interval (6 years or 12 years) for the Control and Trip Circuits from page 9 of PRC-005-2? The description of the two choices is ambiguous See pdf file PRC-005-2_clean_2 010June8.pdf in email documentation sent to Al McMeekin. If not, what would it take to make this circuit partially monitored (including inputs)? 2) Table 1a, page 9, row 2 (Voltage and Current Sensing Inputs) Question - Does this mean secondary quantities from CT's and VT's only? If so, please consider changing the wording from "Voltage and Current Sensing Inputs" to "CT and VT secondary quantities". 3) Table 1a, page 9, row 3 (Control and trip circuits with EM contacts)Question - Does "electromechanical trip or auxiliary contacts" mean EM protective relay outputs and EM tripping/lockout tripping contacts only? Or does it also include any part of the trip circuitry such as

Organization	Question 7 Comment
	cutout switch contacts and breaker trip coils plus associated aux. breaker contacts. For example, the schematic with a microprocessor relay described in the first bulleted item could be considered an unmonitored EM control circuitry (6 year interval). Is this because of the mechanical breaker aux contacts, breaker maintenance switch, and FT-1 test switch? If so, how could any control circuitry fall in the solid state trip contacts category (12 year interval)? 4) Table 1a, page 9, rows 3, 4, 5, 6 - Please consider rewording these to make it clear where control schemes with MP relays that do have trip coil / circuit monitors but don't meet the Partially Monitored requirements fit. (Does this type scheme fit in the 6 year trip test category or the 12 year category?) 5) Table 1a, page 12, row 1 - The maintenance requirements are not the latest wording used for all other Protective Relays. Please consider changing for consistency. 6) Table 1b, page 13, row 1 (Protective Relays) - Line three of the maintenance activities requires us to check inputs and outputs. The last maintenance item is to verify correct operation of output actions that are used for tripping. Question - How is this different than the line three maintenance requirements to check inputs and "outputs"? 7) Table 1b, page 14, rows 1 and 2 - Consider combining these into one row. The maintenance intervals and maintenance activities are these same. Please specify what is required for UFLS and UVLS control schemes). 8) Table 1b, page 14, rows 1 - The first sentence is very general for a monitoring attribute. ("Monitoring of Protection System component inputs, outputs, and connections with reporting of monitoring alarms to a location where action can be taken.") Consider deleting this row or make it more specific. 9) Table 1b, page 14, row 2 [Control Circuitry (Trip Circuits) (except for UFLS/UVLS)]Question: Should there be a 12 year functional trip test requirement for this partially monitored control circuitry? Should this be added to Table 1b? 10) Table 1b, page 14, row 1 [Control Circuitry (Trip Circuits) (except for UFLS/UVLS)] - It states Monitoring of Protection System component inputs, outputs, and connections ... Question - what does "inputs" mean? There are Protection System components such as protective relays, control circuitry, station dc supply, associated communications systems, etc. Does this mean we must monitor inputs to any or all of these Protection System components? How would this be

Organization	Question 7 Comment
	accomplished? 11) Table 1c, page 18, row 4 - Should there still be a requirement to trip breakers by all trip coils every 6 years? Supplementary Reference Document 12) Question on Figure 1, page 27 - Box 1 denoting Protection Relays includes Aux devices, Test or Blocking Switches. The Aux devices Test or Blocking Switches should be part of Box 3 (Control Circuitry). Please correct or note accordingly. FAQ Document 13) On Page 30, please add an Example with Partially Monitored (Level 2) Control Circuit. 14) On the Control Circuit Decision Tree on page 36, the flow chart does not match the current Table 1 requirements. They match the previous version which is described in the first question of this document. We still propose leaving the flow chart on page 36 as is and change Table 1 to match the original requirements. 15) Please consider adding a diagram /elementary drawing of a Partially Monitored Control Circuit showing the trip output contacts, inputs, etc that must be monitored to meet the Monitoring Attributes / Requirements. A diagram showing an Unmonitored control scheme and what it would take to make it Partially Monitored would be helpful too. Additional General FAQ 16) PRC-005-2, R1 requires the Functional Entity to establish a Protection System Maintenance Program (PSMP). It is not clear if this standard establishes a specified frequency for reviewing and updating the PSMP itself or the PSMP criteria outlined in subparts 1.1 through 1.4. By comparison, EOP-005-1 System Restoration Plans, requires the Functional Entity to (a) have a restoration plan and (b) to review and update the restoration plan annually (see EOP-005-1, R1 and R2). This approach to a comprehensive and periodic review considers the PSMP as a whole and is independent of the specific maintenance methods (time-based, condition-based, or performance-based) and maintenance intervals for those respective methods. It is noted however that PRC-005 Attachment A mentions annual updates to the list of Protection System component. According to the

Organization	Question 7 Comment
	Attachment's subtitle, Criteria for a Performance-Based Protection System Maintenance Program, this annual update seems limited to performance-based maintenance and not inclusive of other maintenance methods. The recommendation is to evaluate the need for a periodic review of the PSMP as a whole. 17) R1, Criteria 1.1, and companion VSL. This Criterion requires the identification of all Protection System components. The VSL for R1 uses a percent-based approach to parse out different quantities of components across the four VSL categories. This implies that a Functional Entity must have the ability to put a numerical quantity on its various components and should be able to demonstrate within certain tolerances that its components are included (or counted). If the number of components within scope amount to hundreds or thousands of individual items, the PSMT SDT should consider the Functional Entities' ability to track and quantify the items for a compliance demonstration. If an entity is not able to reasonably quantify which components are in scope, demonstrating compliance on a percent-basis may prove difficult or impossible. Further review may indicate the need to reformat the VSL. Similar concerns are noted in other VSLs (R2, R3, and R4) and in Attachment A where percentage-of-components are mentioned. 18) R4 essentially requires the Functional Entity to implement its PSMP. R4 takes care to highlight the specific task of "identification of the resolution of all maintenance correctable issues." It is noted that other "identification tasks" are included as criterion for the PSMP in R1. If these tasks are all appropriately categorized as identification-type tasks, it may be more efficient to restructure the standard by incorporating this task into R1 with the other criteria. R4 could remain as a basic implementation requirement with more detail provided in subparts 4.1, 4.2, and 4.3. 19) Footnote No. 2 describes maintenance correctable issues and could be interpreted as a potential new term for inclusion in NERC's Glossary of Terms. The PSMT SDT should conduct further review of this terminology as a potential new Glossary term. 20) At R4, subpart 4.3, insert "design" such that it reads as follows: "Ensure that the components are within acceptable design parameters at the..." Also, this subpart duplicates Footnote No. 3 which describes "maintenance correctable issues" and was established in the main requirement R4 at Footnote No. 2.

Organization	Question 7 Comment
Response: Thank you for your comments. 1. The Tables have been rearranged and considerably revised to improve clarity. Please see new Table 1-5. 2. This portion of the definition of Protection System has been revised. Also, the Tables have been rearranged and considerably revised to improve clarity. Please see new Table 1-3. 3. The Tables have been rearranged and considerably revised to improve clarity. Please see new Table 1-5. 4. The Tables have been rearranged and considerably revised to improve clarity. Please see new Table 1-5. 5. The Tables have been rearranged and considerably revised to improve clarity. 6. The Tables have been rearranged and considerably revised to improve clarity. Please see new Table 1-5. 7. The Tables have been rearranged and considerably revised to improve clarity. 8. The Tables have been rearranged and considerably revised to improve clarity. 9. The Tables have been rearranged and considerably revised to improve clarity. Please see new Table 1-5. 10. Some examples of input may include, but are not limited to: breaker fail initiate, start timer. This cannot be an all-inclusive list as any given scheme could have many variations. In short, if your scheme requires a specific input to function properly then you must have that input maintained; if your scheme has a specific output that must function then it must be maintained. If the input or output is used for a non-protective function (such as, but not limited to, Sequence-of-Events Recorder, alarm or indication) then it does not have to be maintained under this Standard. See Section 15.3 of the Supplementary Reference and FAQ II.2.L. 11. Yes. 12. The diagram is for illustrative purposes only, and is intended to demonstrate all devices which need to be included within a PSMP. Box 1 shows the cited devices as being within the relay panel, and makes no distinction regarding what specific type of Protection System component is being addressed. The preceding Table has been revised to avoid this conclusion. 13. The Tables have been revised to remove descriptions of various levels of monitoring. 14. The decision trees have been removed. 15. The Tables have been revised to remove descriptions of various levels of monitoring.	

Organization	Question 7 Comment
16. The expectation is that an entity's PSMP will be current. No periodicity is provided. However, in Attachment A, the performance-based program necessarily requires an ongoing review of the program to assure that it is still relevant. 17. Requirement R1, part 1.1, has been revised to state, "Address all Protection System component types." 18. The SDT believes that the identification of maintenance-correctable issues is properly an issue for implementation of the PSMP, not establishment of the PSMP. 19. The referenced footnote has been removed and a new definition established for this Standard only. 20. The SDT disagrees. The acceptable parameters for a specific application may not be identical to the design parameters for the component.	
FirstEnergy	Implementation Plan a. We do not support the 3 month implementation timeframe for Requirement 1. For many entities, it will take some time to develop a sound PSMP that meets the new PRC-005-2 standard. We suggest a 12 month implementation which we believe is more logical and in alignment with the implementation timeframe for Protection System Components with maximum allowable intervals of less than 1 year, as established in Table 1a. b. Although we support the implementation timeframes for Requirements R2, R3, and R4, we do not support the required periodic percentages of protections systems to be completed. There could be numerous reasons where an entity has to adjust its program schedule which could lead to noncompliance with these percentage milestones. We suggest simply requiring 100% completion of the maintenance per the maximum maintenance intervals. Alternatively an entity should have the flexibility to indicate they have fully transitioned to the new standard during the early stages of the implementation plan if their existing maintenance practices meet or exceed the standards minimum expectations. Doing so should negate the need to produce the "% complete" implementation status.
Response: Thank you for your comments. a. The Implementation Plan has been modified in consideration of your comment. b. The SDT disagrees and feels that a "phased" Implementation Plan is appropriate. The Implementation Plan has been revised to	

Organization	Question 7 Comment
clarify that the percentages are minimums, not absolute.	
American Transmission Company	1. It is appreciated that the SDT is attempting to provide options for maintenance and testing programs. Practically speaking, it will be difficult to perform any type of program outside of Time-Based Maintenance (TBM). Too many circuits are a mix of technology. For example, a line may have microprocessor relays for detecting and tripping line faults, but the bus differential lockout could also trip the line breaker. One may be partially monitored and the other unmonitored. It will force the utility to perform maintenance at the shorter of the maintenance cycles. Additional time and cost will be required to organize and switch out the applicable equipment for the outage, approximately doubling the cost associated with performing these trip tests. When entities are required to maintain tens of thousands of these devices, the simplest approach will be to revert to TBM. ATC does not support the existing 2nd Draft of PRC-005-2 Standard because it is our opinion that: o There is a high probability that system reliability will be reduced with this revised standard. o The number of unplanned outages due to human error will increase considerably. o Availability of the BES will be reduced due to an increased need to schedule planned outages for test purposes (to avoid unplanned outages due to human error). o To implement this standard, an entity will need to hire additional skilled resources that are not readily available. (May require adjustments to the implementation timeline.) o The cost of implementing the revised standard will approximately double our existing cost to perform this work. 2. ATC requests that relevant reliability performance data (based on actual data and/or lessons learned from past operating incidents, Criteria for Approving Reliability Standards per FERC Order 672) be provided to justify the additional cost and reliability risks associated with functional testing. 3. Under a Performance-Based Program, what happens if the population of components drops below 60 (as all will eventually)? Is there an implementation period to default to TBM? 4. Are the internal relays and timers associated with a circuit breaker included as part of the protection scheme? In the Independent Pole Operation breakers (IPO), there are various internal schemes built to protect for pole discordance (one pole open, two closed, event measured over time frame

Organization	Question 7 Comment
	(milliseconds)), these schemes may re-trip the breaker, initiate breaker failure protection or trip a bus lock out relay. In DC control schemes fuses and panel circuit breakers protect for wiring faults. Do these devices need to be tested? Is there an obligation to test the distribution circuit breakers for correct operation points? Is there an obligation to replace fuses after a defined time period?
Response: Thank you for your comments. 1. The Tables have been rearranged and considerably revised to improve clarity. Please see the new Tables. 2. The Standard does not preclude an entity from largely utilizing other methods of verification, although functional testing may be the easiest to achieve. 3. The entity must revert to TBM if the population falls below 60. There is no implementation period; the SDT believes that the annual PBM review will alert the entity that the population is nearing 60, and allow the entity to react to the diminishing component population accordingly. 4. Only those control circuit components necessary for proper Protection System operation are included. As noted, many breakers have numerous other internal auxiliary functions (gas pressure, etc.) that are not relevant. A purely-functional test may address many of the issues cited. There is no obligation to test either distribution circuit breakers or dc panel fuses.	
NERC Staff	NERC staff is pleased with the current iteration of this standard. The staff understands that while PRC-005-2 has historically been the most frequently violated standard, it has mostly been due to documentation issues. The standard has not been much of a heavy hitter in causal or contributive aspects, and with respect to relay operations, there have been very few times that lack of maintenance has been the problem. 1. NERC staff does propose a slight change to 4.2.5.1. The concern is that 4.2.5.1 could be interpreted to apply to devices that protect the generator as opposed to those that protect the Bulk Electric System. The suggested language is as follows: “Protection System components that act to trip generators that are part of the BES, either directly or via generator lockout or auxiliary tripping relays.” 2. Additionally, staff suggests some changes to R1. In that requirement, the PSMP covers “Protection Systems that use measurements of voltage, current, frequency and/or phase angle to determine

Organization	Question 7 Comment
	anomalies and to trip a portion of the BES...” It probably would be better if the list was limited to voltage and current or if the list was replaced with electrical quantities. The former would be okay since voltage and current are the only two electrical quantities that relays measure directly. To remove ambiguity, the most inclusive way to rephrase this is probably the latter alternative, to change the requirement to, “...that use measurements of electrical quantities to determine anomalies...” 3. Finally, Footnotes 2 and 3 (in Requirement 4) are identical. Unless that’s intentional, one should be removed. (And note that Footnote 2 is missing a period.)
Response: Thank you for your comments. 1. The essence of your suggestion is already addressed within 4.2.5 itself. 2. The definition of Protection System has been revised to address your suggestion. 3. The footnotes have been removed.	
MEAG Power	No comment.
Exelon	1. Nuclear generators are licensed to operate and regulated by the Nuclear Regulatory Commission (NRC). Each licensee operates in accordance with plant specific Technical Specifications (TS) issued by the NRC which are part of the stations’ Operating License. TS allow for a 25% grace period that may be applied to TS Surveillance Requirements. Referencing NRC issued NUREGs for Standard Issued Technical Specifications (NUREG-143 through NUREG-1434) Section 3.0, "Surveillance Requirement (SR) Applicability," SR 3.02 states the following: "The specified Frequency for each SR is met if the Surveillance is performed within 1.25 times the interval specified in the Frequency, as measured from the previous performance or as measured from the time a specified condition of the Frequency is met." The NRC Maintenance Rule (10 CFR 50.65) requires monitoring the effectiveness of maintenance to ensure reliable operation of equipment within the scope of the Rule. Adjustments are made to the PM (preventative maintenance) program based on equipment performance. The Maintenance Rule

Organization	Question 7 Comment
	program should provide an acceptable level of reliability and availability for equipment within its scope. The NRC has provided grace periods for certain maintenance and surveillance activities. Exelon strongly believes that SDT should consider providing this grace period to be in agreement and be consistent with the NRC methodology. Not providing this grace period will directly affect the existing nuclear station practices (i.e., how stations schedule and perform the maintenance activities) and may lead to confusion as implementing dual requirements is not the normal station process. Nuclear generating stations have refueling outage schedule windows of approximately 18 months or 24 months (based on reactor type). If for some reason the schedule window shifts by even a few days, an issue of potential non-compliance could occur for scheduled outage-required tasks. The possibility exists that a nuclear generator may be faced with a potential forced maintenance outage in order to maintain compliance with the proposed standard. For the requirements with a maximum allowable interval that vary from months to years (including 18 Months surveillance activities), the SDT should consider an allowance for NRC-licensed generating units to default to existing Operating License Technical Specification Surveillance Requirements if there is a maintenance interval that would force shutting down a unit prematurely or face non-compliance with a PRC-005 required interval. Therefore, at a minimum, maintenance intervals should include an allowance for any equipment specifically controlled within each licensee's plant specific Technical Specifications to implement existing Operating License requirements if such a conflict were to occur. 2. PECO would like to have the implementation plan provide at least 1 year for full implementation of the new standard. This will provide adequate time for development of documentation, training for all personnel, and testing then implementation of the new process(es).
Response: Thank you for your comments. 1. The SDT understands that nuclear power plants are licensed and regulated by the NRC, has a general understanding of the role that plant Technical Specifications (TS) and associated Surveillance Requirements (SR) in the facilities' operating licenses, and has tried to be sensitive to potential conflicts between PRC-005-2 and NRC requirements.	

Organization	Question 7 Comment
	The SDT believes that the majority of components making up the protection systems for in-scope generating facilities as discussed in Section 4.2.5 of the Standard would be considered balance of plant equipment and, therefore, not subject to NRC-issued TS and associated SR requirements. While availability of plant auxiliary sources to the plant's safety related equipment is addressed by TS and associated SR requirements, these documents are focused on the effects that the availability of these transformers have on reactor safety rather than specifying maintenance and testing requirements for the Protection Systems for these transformers. The SDT recognizes that some battery systems may serve as a source of DC power to both reactor safety systems and to Protection Systems discussed in Section 4.2.5. The SDT acknowledges that there might be plant TS and SR applicable to these batteries. However, the SDT believes that the 3-month and 18-month inspection requirements called for in PRC-005-2 would be no more onerous than plant TS requirements for routine online safety system battery inspections and, furthermore, would not necessitate a plant outage. The SDT recognizes that the PRC-005-2 requirement for validating battery design capability via battery capacity testing would require a plant outage. However, it is the opinion of the SDT that the maximum allowed battery capacity testing intervals of not to exceed 6 calendar years for vented lead acid or NiCad batteries (not to exceed 3 calendar years for VRLA batteries) could easily be integrated within the plant's routine 18-month to 2-year interval refueling outage schedule. The SDT believes that PRC-005-2 is complementary to the NRC Maintenance Rule in that PRC-005-2 requirements allow for the leveraging of the entire electrical power industry experience in establishing minimum maintenance activities and maximum allowed maintenance intervals necessary to ensure reliable Protection System performance. Please see Supplemental Reference Section 8.4 for further discussion for the SDT's rationale for exclusion of grace periods. Please see FAQ IV.2.C for further discussion of impact of PRC-005-2 testing requirements on power plant outage schedules. The challenge of integrating PRC-005-2 testing requirements with a plant's outage schedule is not unique to nuclear plants. Finally, the SDT notes that an entity may build grace periods into its own PSMP as long as the maximum allowed time intervals of PRC-005-2 are not exceeded. If an entity wishes to build a 25% grace period into its program, it may do so by setting its program maintenance and testing intervals at <80% of the PRC-005-2 maximum allowable time interval. 2. The Implementation Plan has been modified in consideration of your comments.
Hydro One Networks	1. Footnotes 2 and 3 on page 4 are identical. Delete footnote 3. 2. UFLS systems by design can suffer random failures to trip. It would make sense for a requirement to exist to perform maintenance on the UFLS relay as their failure to operate may affect numerous distribution level feeders. However maintenance on associated DC schemes connected to the

Organization	Question 7 Comment
	devices should only be done on the same frequency as maintenance on the relevant interrupting devices. Consideration should be given to exempting schemes that have a maintenance program in place on those distribution level devices from PRC-005 Standard-specified maintenance intervals. Such Standard-specified intervals could apply to interrupting devices that have no maintenance program in place.
Response: Thank you for your comments. 1. The footnotes have been removed. 2. The Tables have been rearranged and considerably revised to improve clarity, and many activities related to UFLS have been removed. Please see the new Tables.	
Progress Energy Carolinas	1. R1.1.1 states that "all" protection system components be identified. Does the term "all" refer to the major components identified in the Protection System definition (protective relays, communication systems, voltage and current sensing devices, station dc supply, and control circuitry) or does it include all sub-components (jumpers, fuses, and auxiliary relays used in dc control circuits and communication paths/wavetraps/tuners/filters)? We assume the former but request clarification. 2. Draft Implementation Plan for PRC-005-02: The phased implementation plan for R2, R3, and R4 seems reasonable. However, the three-month implementation plan for R1 seems extremely short. Utilities will have to change procedures, job plans, basis documents, provide training, and change intervals in their work tracking databases. In addition, if the utility wants to take advantage of the longer intervals allowed by partial monitoring, significant print work must be performed up front. 3. Descriptors in the type of the protection system column needs to be consistent between 1A, 1B and 1C. In the tables, please clarify "complete functional trip test" for UVLS and UVLS trip tests since the breaker is not being tripped.
Response: Thank you for your comments. 1. Requirement R1, Part 1.1, has been revised to state, "Address all Protection System component types." 2. This portion of the Implementation Plan has been revised to twelve months in consideration of your comment.	

Organization	Question 7 Comment
3. The Tables have been rearranged and considerably revised to improve clarity. Please see the new Tables.	
Manitoba Hydro	1. Once the new Standard is approved, NERC must allow for a greater implementation stage and no further changes proposed for the foreseeable future. It does take a lot of resources for a Utility to make the required changes in maintenance frequency templates or type of maintenance required as per the proposed "Standard". 2. Regarding the use of the term “Calendar” (i.e. end of calendar year) for maximum maintenance interval. Our utility uses end of fiscal year as our cutoff date for completing maintenance tasks for a given year. It would be considerable work for us to have to switch to end of calendar year with zero improvement in our overall reliability. We suggest it be left up to each utility to define their calendar yearly maintenance cycle when all tasks for that year must be completed.
Response: Thank you for your comments. 1. The implementation period for Requirement R1 has been extended from 3 months to 12 months in consideration of your comments. 2. With the vast array of entities subject to compliance monitoring, it would be very difficult for the ERO to assess compliance for varying “years.” Additionally, the SDT understands that most compliance monitors currently request data on a calendar year basis when assessing compliance.	
Grant County PUD	PRC005-02 Comment We offer some comment for your consideration for incorporation into the Standard PRC-005-02 (draft) as presented in the May 27th 2010 PRC 005-02 “Standard Development Roadmap.” RE: Comment on the 2nd Draft of the Standard for Protection System Maintenance and Testing” 1) The term “The Protection System Maintenance Program” (Page 2) appears to be centered on the concept of maintaining specific components as stand alone objects, and therefore infers that the resultant documentation be organized in a similar fashion. Neither is optimal from a practical or a functional perspective. Many rational work practices combine components (example, meggering from the relay input test switch through the cables and the CTs) in the interest of minimizing circuit intrusion and human error. For this reason, such maintenance practices are superior from a reliability standpoint. The emphasis on “components” in the current draft is, at best, tangential to NERC’s

Organization	Question 7 Comment
	stated goal and purpose of PRC-005 to improve reliability. How would we fix this? We would insert the phrase “or Element”-as defined in NERC’s Glossary of Terms to include “one or more components / devices with terminals that measures voltage, current, frequency and/or phase angle” to determine anomalies and to trip a portion of the BES” immediately after any occurrence of the word “component” in each of the Requirements or in a Definition paragraph, intending it to be applied globally to R-1 through R4. This would foster the validity of maintenance activities being applied to aggregations of components - “Elements”-such as would occur during Verification of DC control circuitry or through the employment of fault data analysis. 2) Protection System Maintenance Program. The categorization of maintenance into 7 maintenance activities is welcomed as advancing practices which foster BES reliability. Likewise we find the clarifications denoted by superscripts 1 and 2 helpful. However....under C: MEASURES: M1, the last sentence of the paragraph provides: “For each protection system component, the documentation shall include the type of maintenance program applied (time based, etc), maintenance activities (1 or more of the 7 identified) and maintenance intervals.....” This measure goes beyond the requirements of the standard and should be revised consistent with the deletion of the previous R.1.1 as shown in track changes under the version 2 draft which had included the identification of the maintenance activity associated with each component. COMMENT: It should be apparent in reviewing the evidence that one or more of the 7 listed activity categories are represented. The proscription to explicitly call out these categories is thus redundant---the requirement being that at least one has to be identifiable in the program-and will cause unnecessary complications to the Entity and interpretation issues in the Compliance monitoring effort. We recommend that the words “maintenance activities” be removed from the last sentence in the paragraph pertaining to C: MEASURES: M1.We also believe it is unnecessary to restate the definition of “Protection System” in the Measure. 3) A fundamental incompatibility exists between NERC’s proposition of “maximum maintenance (time based) interval” and the typical CMMS PM generation algorithm. SPCTF members and regional compliance engineers have verbally represented that the “maximum maintenance interval” is a precise term “not to exceed-even by one day---” maximum, otherwise generating a fine-able Violation and that fixed intervals plus or minus a certain additional period of time to account for other operational exigencies are no longer going to be permitted. There is always an interval between the

Organization	Question 7 Comment
	time a CMMS PM is issued and its completion. The time interval between the issue date and the completion date is normally a period of time to allow maintenance staff to schedule their work in an orderly fashion. The maximum time based interval is fixed by the time period specified for issuance of the planned maintenance (PM) work order (e.g. every 3 years) and the defined period of time to complete the work (usually described as a percentage of the PM interval e.g. 25%). So predicating a PM issue date based on the last issue date plus a percentage of the interval time to complete the work is not inconsistent with a fixed time interval. Under the proposed tables, however, there is no accommodation for this predominate maintenance practice. Even if maintenance intervals were shortened to ensure that the required completion date as defined by program intervals does not exceed the NERC maximum interval as described in the tables, this will not be sufficient because auditors may conclude that the tables permit the use of only a single defined interval and not permit an additional defined period of time to schedule and complete the work. Remember, it is immaterial whether the Entity's interval is more stringent than the NERC maximum, a violation may occur if the maintenance is not performed within the Entity's maintenance interval, even if it is shorter than the NERC maximum. A precise maximum interval requires constant managerial intervention on the part of the Entity to ensure that operational exigencies do not cause violations on a component-by component (or element) basis. The shortened interval would tend to destroy the sense of rhythm and pattern which should be manifest in a time based program. Further, after one or more iterations, seasonal restrictions on outages begin to impinge requiring adjustments to be made to the Maintenance Program document to adjust the interval or maintenance activity. At best, it results in a clumsy way of doing business and requiring significantly more oversight into keeping the maintenance program document updated for presentation to auditors rather than focusing on prudent maintenance activities as desired by FERC Order 693. Auditing is not any more difficult if the Maintenance Program also specifies that a percentage of a fixed target / time interval is allowed to schedule and complete the work-as meeting the interval requirements of a time based maintenance program. This method allows for a fixed time for issuance of the work order and maintenance personnel some flexibility to schedule and complete their work within a defined period of time. We recommend to vote against adoption until some more workable solution is identified and disseminated, satisfying both the Compliance Authority and the affected Entities. Specifically, we recommend that the drafting team adopt "target" intervals with a +/- range of

Organization	Question 7 Comment
	acceptability, based on percentage or a fixed time per interval, which can be global for the Program or specific to the elements or components in question. The target intervals must be stated in the PSMP, the range of acceptability easily calculable and enforceable, and within the maximum intervals to be identified in the tables 1a, b, and c, satisfying compliance issues. This also allows the Entities to rationally plan their maintenance using existing CMMS technologies. 4) Within the Violation Security levels, we are aware of no activity by NERC to differentiate the relative criticality of components or Elements of the BES system. For example, protection system components or Elements in a regional switchyard may present a larger potential for disruption of the BES in the event of a mis-operation than does one associated with one generator among fifteen others and which is more electrically remote from and of less consequence to the BES. Unless and until this issue is addressed, both the PRC-005 maintenance and documentation will be less effective and more expensive than it could be. 5) PRC-005-02's proposed effective date is "See Implementation Plan." This is not adequate to provide regulated entities with appropriate notice of the Effective Date of PRC-005-2 standard. " 6) Additionally, NERC has not posted the "Implementation Plan" for comment in the same manner as the proposed standard and thus we are not able to comment on the schedule provided in the Plan. We understand that the retention and documentation cycles go back three years and that a regulated entity, depending on the effective date of this standard and the entity's audit cycle, will be audited to both PRC-005-1 and PRC-005-2 during the same audit period. Some further discussion should be given to allowing comment on the Implementation Plan because of the potential overlapping requirements during a single audit cycle.

Response: Thank you for your comments.

1. The draft Standard supports a variety of methods of designing the PSMP.
2. A definition of "Component" and "Component Type" has been added to the draft Standard. The SDT's intent is that this definition will be used only in PRC-005-2, and thus will remain with the Standard when approved, rather than being relocated to the Glossary of Terms. The Requirements and Measures have been modified to use these terms in a consistent manner. These defintions will assist in addressing your concern.

Organization	Question 7 Comment
3. This comment seems to suggest that a "grace period" should be permitted. "Grace periods" within the Standard are not measurable, and would probably lead to persistently increasing intervals. However, an entity may establish an internal program with grace-period allowance, as long as the entire program (including grace periods) does not exceed the intervals within the Standard. 4. Thank you for your comment. The VRFs address the reliability impact of the Requirements, while the VSLs simply address "how bad did you miss it?" 5. The Implementation Plan for Requirement R1 has been revised from 3 months to 12 months to address this comment. 6. The Implementation Plan was posted for comment, with a question on the comment form during the first posting. The Implementation Plan was not substantially revised for the second posting. During the implementation period, there will be some overlap between PRC-005-1 and PRC-005-2. An unattractive alternative would be to minimize the implementation period for PRC-005-2.	
Xcel Energy	1. R1.1 "Identify all Protection System Components" - does this mean that the PSMP must contain a "list"? Please explain what this means. If it is a list, then essentially it will be a dynamic database, not necessarily a "program" as defined in the PSMP 2. R1.3 "include all maintenance activities..." seems to be an indirect way of indicating that the entities PSMP must comply with the tables. Tables - the components related to DC Supply and battery are confusing. It the battery is the specific component then state "battery". If the charger is the specific component, then state "charger". As currently written, one must sort through all of the different "Station DC Supply" line items to figure out what is required.- 3. In tables 1b and above, it is written "no level 2 monitoring attributes are defined - use level 1 maintenance activities" but then maintenance activities are listed that don't match with Level 1 maintenance activities. Please clarify what exactly needs to be done if using Table 1 b and above.
Response: Thank you for your comments. 1. Requirement R1, Part 1.1, has been revised to state, "Address all Protection System component types." 2. The Tables have been rearranged and considerably revised to improve clarity. Please see new Table 1-4.	

Organization	Question 7 Comment
3. The Tables have been rearranged and considerably revised to improve clarity.	
Northeast Utilities	1. R1.1 It is not clear what would constitute "all Protection System components". Suggest the addition of a definition for "Protection System components".R1.4 Suggest revise to read: "all batteries or dc sources" 2. Table 1a vented lead acid -- "Verify that the station battery can perform as designed by evaluating ..." -- Please define evaluating, including: a. What is the basis for the evaluation? b. Is 5% 10% 20% etc acceptable? c. Where does baseline come from for older batteries? 3. Request clarification of 2.3 Applicability of New Protection System Maintenance Standards from Supplementary Reference. Specifically, please clarify if a functional trip test is needed to be performed on the distribution circuit breakers to protect the Bulk Electric System (BES) if these low side breakers are not part of the transmission path. (A diagram identifying the applicable breakers would be helpful in the Supplementary Reference)
Response: Thank you for your comments. 1. Requirement R1, Part 1.1, has been revised to state, "Address all Protection System component types"..(a) The basis is related to the variation from the baseline. Please see FAQ II.5.G and II.5.F. (b) This is determined by the entity based on the application. (c) The baseline can be provided by the battery manufacturer or the test equipment OEMs. **2.** The Tables have been rearranged and considerably revised to improve clarity. Please see new Table 1-5.	
South Carolina Electric and Gas	R1.1 states "Identify all Protection System Components". To avoid confusion this should be clarified. It could be interpreted that discreet components must be individually identified. An example would be as individual aux relays used in the tripping path.
Response: Thank you for your comment. Requirement R1, Part 1.1, has been revised to state, "Address all Protection System component types".	

Organization	Question 7 Comment
PacifiCorp	1. R1.1: Please clarify what the requirements for "identify" means. Does each component need to be "identified" in our maintenance system, or at least referenced in the maintenance program or labeled in the field??? 2. R4.3: Please provide guidance on what will be required to prove compliance that "maintenance correctable issues" have been identified and corrective actions initiated. 3. What is the implication of finding maintenance correctable issues as it relates to other requirements for no single points of failure? In other words, if during maintenance a relay is found to have failed, is there an acceptable time period under which we may operate the system without redundancy until a repair can be made? Similarly, if part of a redundant relay system is taken out of service for maintenance, may the facility it was protecting be left in service? If not, then is the implication that protection systems must be triple redundant in order to do relay maintenance on in service equipment? Otherwise facilities would always have to be removed from service to do relay maintenance. 4. Section D / 1.3: The data retention requirement for the two most recent performances of each maintenance activity is excessive. The requirement should be limited to the most recent or all activities since the last on-site audit. At the worse case an entity would have to retain records for up to 35 years for maintenance performed on a 12 year cycle. 5. Table 1a "Protective Relay" entry: The last maintenance activity is listed as "for microprocessor relays verify acceptable measurement of power system input values " for which a 6 year interval is provided". How is this different than the next item "Voltage and Current Sensing Inputs to Protective Relays and associated circuitry" which is on a 12 year interval?? Please clarify this. 6. Implementation Plan: This revised standard will drive significant revisions in existing maintenance programs. 3 months is not adequate time after approval to ensure compliance with R1. A minimum of 6 months should be utilized after regulatory approval. The Implementation plan requirements should also recognize that if the requirement to maintain records of the two previous maintenance tasks is implemented, it may not be possible to produce this information upon implementation. The implementation plan should be structured that the requirement to produce previous maintenance records should be phased in as the maintenance is performed. (ie. The requirement to produce two

Organization	Question 7 Comment
	previous records for maintenance performed on a two year cycle should not be enforced until four years after implementation).
Response: Thank you for your comments. 1. Requirement R1, Part 1.1, has been revised to state, “Address all Protection System component types”. 2. Various means may be used. One suggestion would be work orders that addressed the issue. 3. It is left to the entity to determine HOW to address maintenance-correctable issues. It is reasonable that an entity would do so in a manner that presents the least disruption to the system and considers the impact of the malfunctioning component on reliability. 4. In order that a Compliance Monitor can be assured of compliance, the SDT believes that the Compliance Monitor will need the data of the most recent performance of the maintenance, as well as the data of the preceding one, as well as data to validate that entities have been in compliance since the last audit (or currently, since the beginning of mandatory compliance). The SDT has specified the data retention in the posted Standard to establish this level of documentation. The Tables have been rearranged and considerably revised to improve clarity. Please see new Table 1-1. 5. The Implementation Plan for Requirement R1 had been revised from 3 months to 12 months.	
Springfield Utility Board	SUB is supportive of the intent behind the standard and appreciates the ability to provide input into this process. 1.The following is a repeat of the comment in Question #5 with regard to the supplemental reference. SUB appreciates that Time Based, Performance Based, and Condition Based programs can be combined into one program. However it should be clear that a utility may include one, two or all three of these types of programs for each individual device type. Currently the language reads:"TBM, PBM, and CBM can be combined for individual components, or within a complete Protection System." The "and" requires all three to be combined if they are combined. SUB suggests the “and” be changed to "or" language. Change:"TBM, PBM, or CBM can be combined for individual components, or within a complete Protection System."

Organization	Question 7 Comment
Response: Thank you for your comments. Please see our response to your comment in Question 5.	
The Detroit Edison Company	1. Suggest that the implementation plan for R1 (PSMP) be changed to 12 months. 2. The statement in R1.1, "Identify all Protection System components" regarding the PSMP should be clarified. Is a complete list of every "component" of each specific protection system required to be included in the PSMP?
Response: Thank you for your comments. 1. The Implementation Plan for Requirement R1 has been revised from 3 months to 12 months. **2.** Requirement R1, Part 1.1, has been revised to state, "Address all Protection System component types."	
Long Island Power Authority	1. Table 1a under Maintenance Activities for Control and trip circuits with unmonitored solid-state trip or auxiliary contacts (UFLS/UVLS Systems Only) states: Perform a complete functional trip test that includes all sections of the Protection System control and trip circuit, including all solid-state trip and auxiliary contacts (e.g. paths with no moving parts), devices, and connections essential to proper functioning of the Protection System., except that verification does not require actual tripping of circuit breakers or interrupting devices. The word complete may be removed as it requires actually tripping the breakers. The sentence that tripping of the circuit breakers is not required contradicts with the word complete. 2. More specifics are required to spell out the adequate testing e.g. up to the lockout with the trip paths isolated etc. 3. Table 1a under Maintenance Activities for Station dc Supply (used only for UVLS or UFLS) states: Verify proper voltage of the dc supply. Is this requirement applicable to the distribution substations only? 4. Table 1a under Maintenance Activities for Station dc supply (battery is not used) - states Verify that the dc supply can perform as designed when the ac power from the grid is not present. - Please clarify this requirement.

Organization	Question 7 Comment
	5. Table 1a for Associated communications systems - specify the group for the applicability of this requirement. BPS,BES,UFLS etc. 6. Table 1a under Maintenance Activities for Associated communications systems states - Verify that the performance of the channel meets performance criteria, such as via measurement of signal level, reflected power, or data error rate. Why is this required? The requirement "Verify proper functioning of communications equipment inputs and outputs that are essential to proper functioning of the Protection System. Verify the signals to/from the associated protective relays seems sufficient to ensure reliability. 7. Table 1a under Maintenance Activities for Relay sensing for Centralized UFLS OR UVLS systems UVLS and UFLS relays that comprise a protection scheme distributed over the power system states: Perform all of the Maintenance activities listed above as established for components of the UFLS or UVLS systems at the intervals established for those individual components. The output action may be breaker tripping, or other control action that must be verified, but may be verified in overlapping segments. A grouped output control action need be verified only once within the specified time interval, but all of the UFLS or UVLS components whose operation leads to that control action must each be verified. Clarify what is meant by overlapping segments? What is the specified interval? Is actual breaker tripping required?

Response: Thank you for your comments.

1. The Tables have been rearranged and considerably revised to improve clarity. Please see new Table 1-5.
2. The Tables have been rearranged and considerably revised to improve clarity. Please see new Table 1-4.
3. The Tables have been rearranged and considerably revised to improve clarity. Please see new Table 1-4.
4. The Tables have been rearranged and considerably revised to improve clarity. Please see new Table 1-4.
5. The Tables have been rearranged and considerably revised to improve clarity. Please see new Table 1-3.
6. Communications systems are subject to a variety of problems. The listed activities will detect many of these problems. The Tables have been rearranged and considerably revised to improve clarity. Please see new Table 1-2.
7. The Tables have been rearranged and considerably revised to improve clarity. Please see new Table 1-1. Please see Section 8 of

Organization	Question 7 Comment
the Supplementary Reference document regarding “overlapping segments.”	
American Electric Power	1. The "Supplementary Reference" and the "Frequently-Asked Questions" document should be combined into a single document. This document needs to be issued as a controlled NERC approved document. AEP suggests that the document be appended to the standard so it is clear that following directions provided by NERC via the document are acceptable, and to avoid an entity being penalized during an audit if the auditor disagrees with the document’s contents. 2. NiCAD batteries should not be treated differently from Lead-Acid batteries. NiCAD battery condition can be detected by trending cell voltage values. Ohmic testing will also trend battery conditions and locate failed cells (although will usually lag behind cell voltages). A required load test is detrimental to the NiCAD manufacturer's business, and will definitely hurt the NiCAD business for T&D applications. Historically NiCADs may have been put into service because of greater reliability, smaller space constraints, and wider temperature operation range.”Individual cell state of charge” is a bad term because it implies specific gravity testing. Specific gravity cannot be measured automatically (without voiding battery warranty or using an experimental system), and when it is measured, it is unreliable due to stratification of the electrolyte and differing depths of electrolyte taken for samples. “Battery state of charge” can be verified by measuring float current. Once the charging cycle is over the battery current drops dramatically, and the battery is on float, signaling that the battery has returned to full state of charge. This is an appropriate measure for Level 3 monitoring as float current monitoring is a commercially viable option and electrolyte level monitoring is not. 3. In Table 2b, why is Ohmic testing required if the battery terminal resistance is monitored? Cell to cell and battery terminal resistance should not be monitored because they will be taken in 18 month intervals. This further supports the argument that the battery charger alarms would be sufficient for level 2 monitoring, while keeping an 18 month requirement for Ohmic testing, electrolyte level verification, and battery continuity (state of charge). Automatic monitoring of the float current should be sufficient for level 3 monitoring as it gives state of charge of the string, and battery continuity (detect open cells). Shorted cells will still be found during the Ohmic testing and a greater interval is sufficient to locate these problems.

Organization	Question 7 Comment
Response: Thank you for your comments. 1. The SDT disagrees that the documents should be combined. The Supplementary Reference is a holistic presentation of rationale and basis for the various elements of the Standard – discussing mostly the "what" behind the requirements. The FAQ, on the other hand, presents responses to specific frequently-asked questions, and, as such, offers more-focused advice on specific subjects, and is more of a how-to/example discussion. The FAQ is primarily a means of capturing some of the most prevalent comments offered on the Standard by various entities, with the SDT's response. The SDT believes that the format of the FAQ is a more effective means of presenting the included information than it would be to include this information within the text of the Supplementary Reference document. The Standards Committee has a formal process for determining whether to authorize posting a reference document with an approved standard. That process is posted on the Standard Resources web page – here is a link to the procedure: http://www.nerc.com/files/SC_Process_Approve_Supporting_References_Approved_10Mar08.pdf 2. The SDT believes that, since the IEEE Stationary Battery Committee has determined that VRLA batteries and Ni-Cad batteries are different enough to require separate IEEE Standards (IEEE 1188 and IEEE 1106, respectively), these battery technologies are different enough to be treated separately within PRC-005-2. The SDT has drawn upon these IEEE Standards, as well as other sources (EPRI, etc) to develop the Requirements of PRC-005-2. The trending activity cited has not been shown to be effective for Ni-Cad batteries (see FAQ II.5.G), and thus a performance tests must be performed; the performance test may take many forms. The Tables have been rearranged and considerably revised to improve clarity, and all references to specific gravity have been removed. Please see new Table 1-4. Determining the "state of charge" by monitoring the float voltage may be relevant to the overall station battery, but does not provide an indication of the condition of individual cells as required within the new Table 1-4. 3. Battery terminal resistance shows the condition of the external connections, but reveals nothing regarding the internal condition of the individual cells. Measuring the internal cell/unit resistance provides an opportunity to trend the cell condition over time by verifying the electrical path through the electrolyte within the battery. The ohmic testing is not intended to look for open cells/units, but instead at the ability of the individual cell/unit to perform properly. The new Table 1-4 clarifies that, if the electrolyte level is monitored, the internal ohmic testing need only be performed every six years. Please see FAQ II.5.B, II.5,C, and II.5.D for a discussion about continuity.	
JEA	The current interpretation by the SDT of partially monitored is set at a higher bar than most utilities use in their current designs today. We all wish to take advantage of the microprocessor relays and their renowned and improved monitoring capability. If TC1 is monitored by primary relay A and TC2 is

Organization	Question 7 Comment
	monitored by primary relay B, and these relays in turn monitor their DC supplies, the vast majority of the system is monitored - (partially monitored), including all the control cable out to the remote breakers and their trip coils. To add to this some additional contacts within the scheme, located very near the primary relays, is extending the partially monitored bar to a higher level than most designs incorporate today. If you know that 98% of the DC control system is monitored - isn't that partially monitored? Please consider changes to the SDT's current view of a partially monitored protection systems.
Response: Thank you for your comments. The Tables have been rearranged and considerably revised to improve clarity. Please see new Tables 1-1 through 1-5.	
Arizona Public Service Company	1. The generator Facilities subsections 4.2.5.1 through 5 are too prescriptive and inconsistent with sections 4.2.1 through 4. Recommend this section be limited to description of the function as in the preceding sections. 2. Clarification is needed on how the “Note 1” in Table 1a, which appears to be used in to define a calibration failure would be used in Time Based Maintenance. In PRC-005-2 Attachment A: Criteria for a Performance-Based Protection System Maintenance Program, a calibration failure would be considered an event to be used in determining the effectiveness of Performance Based Maintenance. It is unclear in how it will be used in time based maintenance.
Response: Thank you for your comments. 1. The SDT believes that transmission lines, UFLS, UVLS, and SPS are clear without additional granularity, but that the additional granularity regarding generation plants is necessary. This is illustrated by numerous questions regarding “what is included for generation facilities?” relative to PRC-005-1. 2. The Tables have been rearranged and considerably revised to improve clarity. In addition, the Note was removed, and Requirement 4 has been considerably revised.	
Pacific Northwest Small Public Power Utility Comment Group	1. The level 2 table regarding Protection Station dc supply states that level 1 maintenance activities are to be used, but then goes on to give a list of Maintenance Activities that don’t match those in level 1. Which activities shall we use? Same situation for Station DC Supply (battery is not used) where the

Organization	Question 7 Comment
	18 month interval is missing. 2. IEEE battery maintenance standards call for quarterly inspections. These are targets, though, not maximums. An entity wishing to avoid non-compliance for an interval that might extend past three calendar months due to storms and outages must set a target interval of two months thereby increasing the number of inspections each year by half again. This is unnecessarily frequent. We suggest changing the maximum interval for battery inspections to 4 calendar months. For consistency, we also suggest that all intervals expressed as 3 calendar months be changed to 4 calendar months. 3. We are concerned over R1.1, where all components must be identified, without a definition for the word component or the granularity specified. While the FAQ gives a definition, and allows for entity latitude in determining the granularity, the FAQ is not part of the standard. We believe this will allow REs to claim non-compliance for every three inch long terminal jumper wire not identified in a trip circuit path. We suggest that the FAQ definitions be included within the standard.
Response: Thank you for your comments. 1. The Tables have been rearranged and considerably revised to improve clarity. Please see new Table 1-4. 2. The SDT disagrees. The entity should schedule routine inspections to complete the specified activities within the specified 3-month interval. 3. Requirement R1, Part 1.1, has been revised to state, “Address all Protection System component types.”	
PNGC Power	The level 2 table regarding Protection Station dc supply states that level 1 maintenance activities are to be used, but then goes on to give a list of Maintenance Activities that don’t match those in level 1. Which activities shall we use? Same situation for Station DC Supply (battery is not used) where the 18 month interval is missing.
Response: Thank you for your comments. The Tables have been rearranged and considerably revised to improve clarity.	
MRO’s NERC Standards Review Subcommittee	1. The NSRS does not support the existing 2nd Draft of PRC-005-2 Standard because it is our opinion

Organization	Question 7 Comment
(NSRS)	that: o There is a high probability that system reliability will be reduced with this revised standard. o The utility industry is in the business of keeping the lights on, but these requirements will force the industry to take customers out of service in order to fulfill these requirements. A possible solution is to increase the test intervals, set performance targets, test set on a basis of past performance, etc. o The number of unplanned outages due to human error will increase considerably. o The requirement of a complete functional trip test will reduce the level of reliability and all levels of the BES to include distribution systems. o Availability of the BES will be reduced due to an increased need to schedule planned outages for test purposes (to avoid unplanned outages due to human error). o To implement this standard, an entity will need to hire additional skilled resources that are not readily available. (May require adjustments to the implementation timeline.) o The cost of implementing the revised standard will approximately double our existing cost to perform this work. 2. Requests that relevant reliability performance data (based on actual data and/or lessons learned from past operating incidents, Criteria for Approving Reliability Standards per FERC Order 672) be provided to justify the additional cost and reliability risks associated with functional testing. 3. Under a Performance-Based Program, what happens if the population of components drops below 60 (as all will eventually)? Is there an implementation period to default to TBM? 4. Please clarify In R1, the statement “or are designed to provide protection for the BES” re-opens the argument about transformer protection or breaker failure protection for transformer high-side breakers tripping BES breakers being included in the transmission protection systems. 5. Also, for Table 1b “Verify that each breaker trip coil, each auxiliary relay, and each lockout relay is electrically operated within this time interval” should be changed from a 6 year interval to a 12 year interval similar to the relay input and outputs. Experience has shown that these both have very

Organization	Question 7 Comment
	similar reliability. 6. The standard as currently drafted raises concern as it relates to the identification of all Protection System components, particularly those with associated communications equipment. In the case of leased lines, a utility would be expected to maintain equipment they do not own. Recommend revising the standard to consider maintenance activities on a communications channel basis in which intermediate device functioning can be verified by sending a signal from one relay to another. 7. Clarification should be given as to the reason for stating control circuitry separately, such as in "Control and trip circuits". As currently stated, this implies that close circuit DC paths are now subject to a protection system maintenance program when reclosing and closing of breakers have never before been considered part of a Protection System. 8. Statements 3 (For microprocessor relays, check the relay inputs and outputs that are essential to proper functioning of the Protection System.) and 6 (Verify correct operation of output actions that are used for tripping. in Table 1b for Protective Relays essentially address the same issue. Please clarify if these are addressing the same issue or not. If the purpose is to describe the functionality of the protection system, that should be covered under another section in the table, such as DC circuitry. 9. How one identifies a voltage and current sensing input is not well defined. In most cases, this should already be identified with the relay. Also, the scope of detail required is ambiguous. Would individual cables, terminal blocks, etc. need to be identified as would be implied by "associated circuitry"? Please clarify. The NSRS recommends that individual cables, terminal blocks, etc are not included in this program. 10. Recommend removing "proper functioning of" from the maintenance activities for voltage and current sensing inputs in Table 1b. A utility is not verifying the functionality of the signal(s), they are verifying the signals themselves. Any functioning of the signals, which is related to ensuring proper relay interpretation, would be covered under the protective relay section. 11. In general, has thought been put into the possibility of degrading reliability by implementing such a rigorous maintenance program? To implement such a program, the number of scheduled outages would greatly increase resulting in scheduling conflicts that will increase, as well as degrading

Organization	Question 7 Comment
	system conditions by taking lines, transformers, etc. out of service. Because of past design practices many of the requirements for maintenance will only be able to be performed by lifting wires to isolated trip paths. Potential error is introduced anytime a wire is lifted, especially numerous wires, by means of ensuring they are put back in the correct place. Redundancy is one thing that has been implemented in great detail throughout the history of protection systems to ensure that they work as intended. Diligent commissioning may need to be given its due credit.

Response: Thank you for your comments.

1. Thank you for your opinions.
2. The Standard does not preclude an entity from largely utilizing other methods of verification, although functional testing may be the easiest to achieve.
3. The entity must revert to TBM if the population falls below 60. There is no implementation period; the SDT believes that the annual PBM review will alert the entity that the population is nearing 60, and allow the entity to react to the diminishing component population accordingly.
4. This comment relates to your regional BES definition, not the Standard.
5. The Tables have been rearranged and considerably revised to improve clarity. Please see new Table 1-5. The SDT believes that mechanical solenoid-operated devices share performance attributes (and failure modes) with electromechanical relays and need to be tested at similar intervals. Performance-based maintenance is an option to increase the intervals if the performance of these devices supports those intervals.
6. The functional testing of the channel will verify that the communications system operates properly. If the communications system does not perform properly, the applicable entity is responsible to assure that it is restored to service; the physical actions to do so may have to be performed by other parties. Your suggested end-to-end test is one effective way of performing this maintenance; however, this is only one of several ways of doing this.
7. This component of the definition is stated to apply as “associated with protective functions” and thus excludes close/reclosing circuits. Please see FAQ II.1.A.
8. The Tables have been rearranged and considerably revised to improve clarity. Please see new Table 1-1.
9. This component of the Protection System definition is to generally include this functionality as a part of the Protection System. The

Organization	Question 7 Comment
detailed applicability of this component within PRC-005-2 is addressed within the Standard. The "protective relay" only addresses how the relay itself uses these signals, but does not address the concern regarding whether these signals are accurate. The Tables have been rearranged and considerably revised to improve clarity. Please see new Table 1-3. Requirement R1, part 1.1, has been revised to state, "Address all Protection System component types" to clarify that "individual cables, terminal blocks, etc." need not be discretely addressed. The definition has also been revised to remove "associated circuitry" from this portion. Please see FAQ II.3.A. 10. The Tables have been rearranged and considerably revised to improve clarity. Please see new Table 1-3. **11.** The SDT believes that performing these maintenance activities will benefit the reliability of the BES.	
Indiana Municipal Power Agency	1. The proposed effective date working is confusing and maybe incorrect. It looks like the second part of the paragraph refers to the additional maintenance and testing required by requirement 2 of the current version of PRC-005-1. PRC-005-2 will be adding additional maintenance and testing. Since the current wording is confusing, we are not sure when we have to ensure the new testing is done on the protection equipment. 2. When it comes to battery maintenance, the battery cell to cell connection resistance has to be verified. IMPA is not sure how the SDT wants this maintenance performed. Some battery banks are made up of individual battery cases with two posts at each end that contain two to four individual battery cells inside of each case. To actually tear down the individual cells in a case would be extremely hard and maybe impossible on the sealed cases without destroying the cases. It would be nice to describe how the SDT wants the connection resistance of battery cell to cell verified in the FAQ guide. 3. In the same guide, the SDT might give insight on what is meant by verifying the state of charge of the individual battery cell/units (table 1A). It seems like measuring the voltage level of the individual battery would work for this verification, but additional information of what the SDT wants for this verification would eliminate any doubt and help with being in compliant with this requirement.
Response: Thank you for your comments. 1. The SDT does not understand your concern. Perhaps you are referring to the Implementation Plan for the definition rather than the Implementation Plan for the Standard. The second bullet in the introductory portion of the Implementation Plan for the Standard has	

Organization	Question 7 Comment
been modified to state, " ... is being performed according to …" rather than "has been moved to" to be more concise. 2. The Tables have been rearranged and considerably revised to improve clarity. Please see new Table 1-4. The term "cell" has been modified to "cell/unit" to address part of your concern. Please see FAQ II.5.L. 3. The Tables have been rearranged and considerably revised to improve clarity. Please see new Table 1-4. IEEE Standards 1188, 450, and 1106 provide "how-to" guidance specific to various battery technologies.	
ReliabilityFirst Corp.	The SDT should be congratulated on its hard work in making substantial improvements to an existing standard. 1. In revising the draft standard, the SDT should consider the difficulty an entity will have in providing the evidence required to show compliance. 2. R1 unnecessarily limits PSMPs to "Protection Systems that use measurements of voltage, current, frequency and or phase angle to determine anomalies." However, if an entity applies devices that protect equipment based on other non-electrical quantities or principles such as temperature or changes in pressure, the entity is not required to maintain them. These types of devices have long been considered by many organizations as important forms of protection and therefore in some instances are connected to trip. There are also many organizations that consider these types of devices too unreliable to use as protection and therefore only connect them for monitoring (and not to trip). If protection based on non-electrical quantities is not properly maintained, it will Misoperate and will negatively impact reliability. The standard cannot simply ignore a type of protection that can ultimately affect the reliability of the BES.
Response: Thank you for your comments. 1. The SDT has considered this, and has provided examples in the Measures. Please see Section 15.7 of the Supplementary Reference document and FAQ IV.1.B. **2.** Requirement R1 does not preclude entities from maintaining such devices or including them in the PSMP.	
Indeck Energy Services	The standard should include an assessment of, and criteria for, determining whether a Protective System is important to reliability. It presently treats a fault current relay on a 345 kV or higher voltage

Organization	Question 7 Comment
	transformer the same as one on a small generator on the 115 kV system. The impact of failures on both on a hot summer day like we've had recently in NY, would be very different. As discussed at the FERC Technical Conference on Standards Development, the goal of the standards program is to avoid or prevent cascading outages--specifically not loss of load. This seems to have been lost in the drafting process. Much of the effort expended on complying with the existing PRC maintenance standards, as well as that to be expended on PRC-005-2, has little to no significant in terms of improving reliability. That effort could be better utilized if focused on activities that could significantly improve reliability. As one of the Commissioners at the FERC Technical Conference on Standards Development characterized the relationship between FERC and NERC as a wheel off the track. The whole standards program, and especially PRC-005-2, is off the track.
Response: Thank you for your comments. Your comments seem to be related to NERC Standards Development in general, and to BES definitions. The 2007-17 SDT is unable to address these concerns. The SDT is addressing its assignment from the approved SAR, and believes that performing maintenance on Protection Systems will benefit the reliability of the BES.	
US Bureau of Reclamation	1. The sub-requirements for R1, are not criteria, rather implementation requirements more suitable to be included in R4. Examples of what the PSMP shall address which would be more consistent with the language in R1 would be: • How are changes to the PSMP administered? • Who approves the determination of the use of time-based, condition based or performance based maintenance. • Who reviews activities under the PSMP 2. References used within the standard are not consistent. In R1.2 Attachment as is referred to as Attachment A. In R3 Attachment A is referred to as PRC-005 Attachment A. This implies a difference. Under a voluntary world, we could draft criteria and procedures with these problems and interpret them correctly. Today in the compliance world, the language must be precise and unambiguous. The reference must be the same it means something different. 3. The requirement in R1, which is consistent with the purpose, does not support the applicability in

Organization	Question 7 Comment
	R4.2.5.4. Protection systems associated with stations service are not designed to provide protection for the BES. In particular we have been told that intent was not to look at every device that tripped the generator but devises that sensed problems on the BES and trip the generator. Hence we include such things as frequency relays, Differential relays, zone relays, over current, and under voltage relays. Even a loss of field looks at the system as included. Speed sensing devices were explicitly excluded. As such, if the stations service transformer protection looks toward the BES (e.g. differential relays and zone relays) they would be included. Over current would not as it would be on the station side. If a Station Service transformer saw excess current, the system would in most cases fail over to other side. If not, it would cause the generator to trip much like a generator thermal device which is also excluded. Maintenance programs offer a unique problem to the FERC and regulatory world. The knee jerk reaction is to define them. What happens if the solution is bad, who will accept the consequences that narrow prescription was wrong and the interval caused a reliability impact. It would no longer be the Entity. History is replete with examples of this type of micro managing. Rather than fall into the same trap, and suffer the consequences of the unknown, allow Entities to optimize their programs to ensure reliability of the BES and create a standard of disallowed practices which have a demonstrated impact on reliability.
Response: Thank you for your comments. 1. Requirement R1 presents the requirements to establish a PSMP; Requirement R4 presents the implementation of the program. The SDT believes that this arrangement is correct. The examples cited seem to be related more to the internal administration of the PSMP within an entity, and not to the requirements. 2. The Standard has been modified to make these phrases consistent in consideration of your comment. 3. The SDT believes that the station service transformers may be essential to the operation of the generator (which is the BES element), and thus that the protection of these needs to be addressed as part of PRC-005-2.	
Bonneville Power Administration	1. The term “maintenance correctable issue” used in Requirement 4 seems to be at odds with the definition given for it. It seems that an issue that cannot be resolved by repair or calibration during the maintenance activity would be a maintenance non-correctable issue. Also, in Requirement 4, the term “identification of the resolution” is ambiguous. Suggested changes for Requirements 4 and 4.1

Organization	Question 7 Comment
	are: a. R4. Each Transmission Owner, Generator Owner, and Distribution Provider shall implement its PSMP, and resolve any performance problems as follows: b. 4.3 Ensure either that the components are within acceptable parameters at the conclusion of the maintenance activities or initiate actions to replace the component or restore its performance to within acceptable parameters.
Response: Thank you for your comments. **1.** The definition of "maintenance correctable issue" is consistent with the way it is used within the Standard.	
Santee Cooper	There is some discussion in the documents, such as the definition of component in the Frequently-Asked Questions, about the idea that an entity has some latitude in determining the level of "protection system component" that they use to identify protection systems in their program and documentation. The example given is about DC control circuitry. There are requirements in this standard that are specific to a component, such as R1.1 - Identify all protection system components. Historically, if your maintenance and testing program is defined as (say, for relays) testing all the relays in a station at one time, your program, test dates, etc. could be identified by the station. There needs to be some addition, possibly to the Frequently asked questions, to explain what kind of documentation will be required with this new standard. For example, if your program is to test all the relays at a station every 4 years, and all the relays are tested at the same time, can your documentation of your schedule (the "date last tested" and previous date) be listed by station (accepting that you should have the backup data to show the testing was thorough) or must you be able to provide a list by each relay. Without some clarification, it seems like this could get confusing at an audit with many of the requirements pertaining to "each component."
Response: Thank you for your comments. Requirement R1, Part 1.1, has been revised to state, "Address all Protection System component types." The remaining issues within your comment are dependent on how your PSMP addresses them.	
Northeast Power	1. UFLS systems by design can suffer random failures to trip. A requirement should exist that stipulates to perform maintenance on the UFLS relay as their failure to operate may affect numerous

Organization	Question 7 Comment
Coordinating Council	distribution level feeders. However maintenance on associated DC schemes connected to the devices should only be done on the same frequency as maintenance on the relevant interrupting devices. Consideration should be given to exempting schemes that have a maintenance program in place on those distribution level devices from PRC-005 Standard-specified maintenance intervals. Such Standard-specified intervals could apply to interrupting devices that have no maintenance program in place. 2. This standard is overly prescriptive. Owners of protection system equipment establish maintenance procedures and timelines based on manufacturers' recommendations and experiences to ensure reliability. Maintenance intervals change with improved practices and equipment designs, and whenever that occurs PRC-005 will have to go through the revision process, which would be frequent and unnecessary if the standard were more general.
Response: Thank you for your comments. 1. The Tables have been rearranged and considerably revised to improve clarity. Please see new Tables 1-1 through 1-5. 2. FERC Order 693 and the approved SAR for this project directed the SDT to establish both maximum maintenance intervals and minimum maintenance activities within the revised Standard.	
Entergy Services	We support this project and believe it is a positive step towards BES reliability. However, we believe the draft document needs additional work as per our comments. Also, as indicated by the amount of industry input on the last version draft comments, we believe revisions are still needed to properly address this technically complex standard. If this standard is to deviate from the original project schedule and follow a fast track timeline for approval, then we disagree with the 3 month implementation for Requirement 1 and ask for at least 12 months. The original schedule provided sufficient advance notice to work on an implementation plan and it included the typical time required for NERC Board of Trustees and regulatory approvals. If the project schedule and typical NERC Board of Trustees and regulatory approval times are to be accelerated, the implementation plan should be extended.
Response: Thank you for your comments. The Implementation Plan for Requirement R1 has been revised from 3 months to 12	

Organization	Question 7 Comment
months.	
Utility Services	With regard to DPs who own transmission Protection Systems, the standard is still very unclear on when a DP owns a transmission Protection System. Many DPs own equipment that is included within the definition of a Protection System; however, ownership of such equipment does not necessarily translate directly into a transmission Protection System under the compliance obligations of this standard. DPs need to know if this standard applies to them and right now, there is no certain way of determining that from within this language or previous versions of this standard. Additionally, the NPCC Regional Standards Committee withdrew a SAR on this very subject as we informed the question would be addressed in this proposal.
Response: Thank you for your comments. Your concern seems to be primarily related to the applicable regional BES definition.	
Y-W Electric Association, Inc.	1. Y-WEA concurs with Central Lincoln regarding the timing of required battery tests. The IEEE standards referenced indicate target maintenance intervals. In order to remain reasonable, then, this compliance standard needs to allow some buffer between a targeted maintenance and inspection interval and a maximum enforceable maintenance and inspection interval. Central Lincoln's suggestion of a four-month maximum window is reasonable and should be incorporated into the standard. 2. Y-WEA is also concerned with R1.1's language indicating that all components must be identified with no defined "floor" for the significance of a component to the Protection System. The SDT cannot possibly expect that a parts list containing every terminal block, wire and jumper, screw, and lug is going to be maintained with every single part having all the compliance data assigned to it, but without clearly stating this, that is exactly the degree of record-keeping that some overzealous auditor could attempt to hold the registered entity to. The FAQ is much clearer as to what is and is not a component and should be considered for the standard. 3. Y-WEA also concurs with FMPA's comments regarding the testing of batteries and DC control circuits associated with UFLS relaying. Many UFLS relays are installed on distribution equipment. Furthermore, many distribution equipment vendors are including UFLS functions in their distribution equipment. For example, many recloser controls incorporate a UFLS function in them. These

Organization	Question 7 Comment
	controls and the reclosers they are attached to, however, are strictly distribution equipment. 16 USC 824o (a)(1) limits the definition of the Bulk-Power System to "not include facilities used in the local distribution of electric energy." A distribution recloser and its control clearly fall into this exclusion. 16 USC 824o (i)(1) prohibits the ERO from developing standards that cover more than the Bulk-Power System. As such, the DC control circuitry and batteries associated with many UFLS relaying installations are precluded from regulation under NERC's reliability standards and may not be included in this standard because they are distribution equipment and therefore not part of the Bulk-Power System. The proposed standard needs to be rewritten to allow for this exclusion and to allow for the testing of only the UFLS function of any distribution class controls or relays.

Response: Thank you for your comments.

1. The SDT disagrees. You should complete the activities within the intervals specified.
2. Requirement R1, Part 1.1, has been revised to state, "Address all Protection System component types."
3. The Tables have been rearranged and considerably revised to improve clarity. Please see new Tables 1-4 and 1-5.

The new proposed definition of Protection System reads as follows:

Protection System:

- Protective relays which respond to electrical quantities,
- Communications systems necessary for correct operation of protective functions,
- Voltage and current sensing devices providing inputs to protective relays,
- Station dc supply, and
- Control circuitry associated with protective functions through the trip coil(s) of the circuit breakers or other interrupting devices.

NERC
NORTH AMERICAN ELECTRIC RELIABILITY CORPORATION

Protection System Definition

Current Approved Definition:

Protective relays, associated communication systems, voltage and current sensing devices, station batteries and DC control circuitry.

The drafting team initially proposed changes to the definition as shown below:

Protective relays, associated communication systems necessary for correct operation of protective devices, voltage and current sensing inputs to protective relays ~~devices~~, station DC supply ~~batteries~~, and DC control circuitry from the station DC supply through the trip coil(s) of the circuit breakers or other interrupting devices.

Based on stakeholder comments, the drafting team made minor changes to the proposed definition as shown below.

Protective relays, ~~associated~~ communication systems necessary for correct operation of protective ~~devices~~functions, voltage and current sensing inputs to protective relays and associated circuitry from the voltage and current sensing devices, station dc supply, and ~~DC~~ control circuitry associated with protective functions from the station dc supply through the trip coil(s) of the circuit breakers or other interrupting devices.

The proposed definition of Protection System reads as follows:

Protective relays which respond to electrical quantities, communication systems necessary for correct operation of protective functions, voltage and current sensing devices providing inputs to protective relays ~~and associated circuitry from the voltage and current sensing devices~~, station dc supply, and control circuitry associated with protective functions ~~from the station dc supply~~ through the trip coil(s) of the circuit breakers or other interrupting devices.

The new proposed definition of Protection System reads as follows:

Protection System:

- Protective relays which respond to electrical quantities,
- Communications systems necessary for correct operation of protective functions,
- Voltage and current sensing devices providing inputs to protective relays,
- Station dc supply, and
- Control circuitry associated with protective functions through the trip coil(s) of the circuit breakers or other interrupting devices.

Implementation Plan for the Revised Definition of Protection System

Prerequisite Approvals or Activities:
The implementation of the revised definition is not dependent upon any other activity.

Recommended Modifications to Already Approved Standards
The non-capitalized version of the term, "protection system" is used in the following approved standards:

- NUC-001-2 — Nuclear Plant Interface Coordination
- PER-005-1 — System Personnel Training
- PRC-001-1 — System Protection Coordination

The term, "protection system" shall be capitalized where used in these standards when the definition of "Protection System" is approved by applicable regulatory authorities.

Proposed Effective Date:
Each responsible entity (Distribution Provider that owns a transmission Protection System, Transmission Owner, and Generator Owner) shall modify its protection system maintenance and testing program description and basis document(s) (required in Requirement R1 of PRC-005-1 – Transmission and Generation Protection System Maintenance and Testing) as necessary to reflect the modified definition of 'Protection System' by the first day of the first calendar quarter twelve months following regulatory approvals and implement any additional maintenance and testing (required in Requirement R2 of PRC-005-1 – Transmission and Generation Protection System Maintenance and Testing) by the end of the first complete maintenance and testing cycle described in the entity's program description and basis document(s) following establishment of the program changes resulting from the revised definition.

The original definition of "Protection System" shall be retired at the same time the revised definition becomes effective.

Implementation Plan for the Revised Definition of Protection System

Prerequisite Approvals or Activities:

The implementation of the revised definition is not dependent upon any other activity.

Recommended Modifications to Already Approved Standards

The non-capitalized version of the term, "protection system" is used in the following approved standards:

- NUC-001-2 – Nuclear Plant Interface Coordination
- PER-005-1 – System Personnel Training
- PRC-001-1 – System Protection Coordination

The term, "protection system" shall be capitalized where used in these standards when the definition of "Protection System" is approved by applicable regulatory authorities.

Proposed Effective Date:

Each responsible entity (Distribution Provider that owns a transmission Protection System, Transmission Owner, and Generator Owner) shall modify its protection system maintenance and testing program description and basis document(s) (required in Requirement R1 of PRC-005-1 – Transmission and Generation Protection System Maintenance and Testing) as necessary to reflect the modified definition of 'Protection System' by the ~~end~~ first day of the first calendar quarter ~~six~~ twelve months following regulatory approvals and implement any additional maintenance and testing (required in Requirement R2 of PRC-005-1 – Transmission and Generation Protection System Maintenance and Testing) by the end of the first complete maintenance and testing cycle described in the entity's program description and basis document(s) following establishment of the program changes resulting from the revised definition.

The original definition of "Protection System" shall be retired at the same time the revised definition becomes effective.

NERC
NORTH AMERICAN ELECTRIC RELIABILITY CORPORATION

Standards Announcement

Second Ballot Window Open
July 23–August 2, 2010

Now available at: https://standards.nerc.net/CurrentBallots.aspx

Project 2007-17: Protection System Maintenance and Testing

A second ballot window for the definition of "Protection System" is now open **until 8 p.m. Eastern on August 2, 2010**.

Instructions

Members of the ballot pool associated with this project may log in and submit their votes from the following page: https://standards.nerc.net/CurrentBallots.aspx

Recirculation Ballot Process

The Standards Committee encourages all members of the ballot pool to review the consideration of comments submitted with the initial ballots and those submitted through the formal comment period. In this second ballot, votes are counted by exception only — if a ballot pool member does not submit a revision to that member's original vote, the vote remains the same as in the first ballot. Members of the ballot pool may:

- Reconsider and change their vote from the first ballot.
- Vote in the second ballot even if they did not vote on the first ballot.
- Take no action if they do not want to change their original vote.

Next Steps

Voting results will be posted and announced after the ballot window closes.

Project Background

When the Board of Trustees was asked to approve an interpretation of PRC-005-1 that was written by the Protection System and Maintenance Standard Drafting Team, the board acknowledged the reliability gap identified by the drafting team caused by the definition of "protection system" and directed that work to close this reliability gap should be given "priority." The Standards Committee directed the team to advance the definition of Protection System in parallel with the development of PRC-005-2.

Project page:
http://www.nerc.com/filez/standards/Protection_System_Maintenance_Project_2007-17.html

116-390 Village Blvd.
Princeton, NJ 08540
609.452.8060 | www.nerc.com

Special Notes:
On March 18, 2010, FERC issued several orders and notices of proposed rulemakings pertaining to standards development activities and processes, suggesting a lack of progress in responding to directives from Order 693 as well in the timeliness of standards development in general. At the May 2010 NERC Board meeting, Gerry Cauley, NERC's President, also expressed these concerns, indicating that the resolution to these concerns is one of NERC's top priorities in the near term. As a result, the Standards Committee has authorized deviations from the normal standards development process for the Protection System Maintenance and Testing project, as well as other projects, to demonstrate that the NERC enterprise is responsive to FERC directives, and is making progress in developing standards.

The Standards Committee approved the following deviations from the standards development process for the definition of Protection System:

- The proposed changes to the definition will be posted for a 35-day comment period (rather than 45-day comment period). The ballot pool will be formed during the first 21 days of the 35-day comment period;
- The initial ballot will be conducted during the last 10 days of the 35-day comment period; and
- The drafting team may make modifications between the initial and successive ballots based on stakeholder comments to improve the overall quality of the standard and definition.

Standards Development Process

The Reliability Standards Development Procedure contains all the procedures governing the standards development process. The success of the NERC standards development process depends on stakeholder participation. We extend our thanks to all those who participate.

For more information or assistance, please contact Lauren Koller at Lauren.Koller@nerc.net

NERC
NORTH AMERICAN ELECTRIC RELIABILITY CORPORATION

Standards Announcement
Final Ballot Results

Now available at: https://standards.nerc.net/Ballots.aspx

Project 2007-17: Protection System Maintenance and Testing
The second ballot for the definition of "Protection System" ended on August 2, 2010.

Ballot Results
Voting statistics are listed below, and the Ballot Results Web page provides a link to the detailed results:

Quorum: 94.70%
Approval: 58.61%

Next Steps
The drafting team will review and respond to the comments received, and will determine whether to make additional changes to the definition or its implementation plan, based on those comments. Should the team decide to make revisions the revised item(s) will be posted for a 30-day comment period with another ballot conducted during the last ten days of that comment period.

Project Background
When the Board of Trustees was asked to approve an interpretation of PRC-005-1 that was written by the Protection System and Maintenance Standard Drafting Team, the board acknowledged the reliability gap identified by the drafting team caused by the definition of "protection system" and directed that work to close this reliability gap should be given "priority." The Standards Committee directed the team to advance the definition of Protection System in parallel with the development of PRC-005-2.

More information is available on the project page:
http://www.nerc.com/filez/standards/Protection_System_Maintenance_Project_2007-17.htmlb

Standards Development Process
For this project, the Standards Committee authorized using the standard development process in the *Standard Processes Manual*. The success of the NERC standards development process depends on stakeholder participation. We extend our thanks to all those who participate.

Ballot Criteria (from *Standard Processes Manual*)
Approval requires both a (1) quorum, which is established by at least 75% of the members of the ballot pool for submitting either an affirmative vote, a negative vote, or an abstention, and (2) A two-thirds majority of the weighted segment votes cast must be affirmative; the number of votes cast is the sum of affirmative and negative votes, excluding abstentions and nonresponses. If there are no negative votes with reasons from the first ballot, the results of the first ballot shall stand. If, however, one or more members submit negative votes with reasons, at least one more ballot must be conducted. If the drafting team makes no substantive changes following the initial ballot, then a "recirculation" ballot is conducted – however if the drafting team makes substantive changes, the revised standard (or definition) must be posted for a 30-day comment period, with a successive ballot conducted during the last 10 days of that comment period. If the drafting team does not make substantive changes following the successive ballot, then the standard moves forward to a recirculation ballot.

For more information or assistance, please contact Courtney Camburn at Courtney.camburn@nerc.net

User Name

Password

Log in

Register

-Ballot Pools
-Current Ballots
-Ballot Results
-Registered Ballot Body
-Proxy Voters

Home Page

Ballot Results

Ballot Name:	Project 2007-17 Protection System Maintenance (Protection System definition)_rc
Ballot Period:	7/23/2010 - 8/2/2010
Ballot Type:	recirculation
Total # Votes:	304
Total Ballot Pool:	321
Quorum:	**94.70 % The Quorum has been reached**
Weighted Segment Vote:	58.61 %
Ballot Results:	**The Standard has NOT Passed**

Summary of Ballot Results

Segment	Ballot Pool	Segment Weight	Affirmative # Votes	Affirmative Fraction	Negative # Votes	Negative Fraction	Abstain # Votes	No Vote
1 - Segment 1.	89	1	50	0.617	31	0.383	3	5
2 - Segment 2.	9	0.4	3	0.3	1	0.1	4	1
3 - Segment 3.	71	1	43	0.662	22	0.338	4	2
4 - Segment 4.	24	1	11	0.524	10	0.476	0	3
5 - Segment 5.	67	1	31	0.517	29	0.483	3	4
6 - Segment 6.	37	1	21	0.6	14	0.4	1	1
7 - Segment 7.	0	0	0	0	0	0	0	0
8 - Segment 8.	11	0.8	4	0.4	4	0.4	2	1
9 - Segment 9.	6	0.5	4	0.4	1	0.1	1	0
10 - Segment 10.	7	0.5	2	0.2	3	0.3	2	0
Totals	**321**	**7.2**	**169**	**4.22**	**115**	**2.98**	**20**	**17**

Individual Ballot Pool Results

Segment	Organization	Member	Ballot	Comments
1	Allegheny Power	Rodney Phillips	Affirmative	
1	Ameren Services	Kirit S. Shah	Negative	View
1	American Electric Power	Paul B. Johnson	Negative	View
1	American Transmission Company, LLC	Jason Shaver	Affirmative	
1	Arizona Public Service Co.	Robert D Smith	Negative	View
1	Associated Electric Cooperative, Inc.	John Bussman		
1	Avista Corp.	Scott Kinney	Negative	View

1	Baltimore Gas & Electric Company	John J. Moraski	Negative	View
1	BC Transmission Corporation	Gordon Rawlings	Affirmative	View
1	Beaches Energy Services	Joseph S. Stonecipher	Negative	View
1	Black Hills Corp	Eric Egge		
1	Bonneville Power Administration	Donald S. Watkins	Affirmative	
1	CenterPoint Energy	Paul Rocha	Negative	View
1	Central Maine Power Company	Brian Conroy	Affirmative	
1	City of Vero Beach	Randall McCamish	Negative	
1	City Utilities of Springfield, Missouri	Jeff Knottek	Negative	
1	Clark Public Utilities	Jack Stamper	Negative	View
1	Cleco Power LLC	Danny McDaniel	Affirmative	
1	Colorado Springs Utilities	Paul Morland		
1	Commonwealth Edison Co.	Daniel Brotzman	Affirmative	View
1	Consolidated Edison Co. of New York	Christopher L de Graffenried	Negative	View
1	Dairyland Power Coop.	Robert W. Roddy	Negative	View
1	Dayton Power & Light Co.	Hertzel Shamash	Affirmative	
1	Deseret Power	James Tucker	Affirmative	
1	Dominion Virginia Power	John K Loftis	Affirmative	
1	Duke Energy Carolina	Douglas E. Hils	Affirmative	
1	East Kentucky Power Coop.	George S. Carruba	Affirmative	
1	Empire District Electric Co.	Ralph Frederick Meyer	Negative	View
1	Entergy Corporation	George R. Bartlett	Affirmative	
1	FirstEnergy Energy Delivery	Robert Martinko	Affirmative	View
1	Florida Keys Electric Cooperative Assoc.	Dennis Minton	Negative	
1	Gainesville Regional Utilities	Luther E. Fair	Affirmative	
1	GDS Associates, Inc.	Claudiu Cadar	Negative	View
1	Georgia Transmission Corporation	Harold Taylor, II	Affirmative	
1	Great River Energy	Gordon Pietsch	Affirmative	View
1	Hydro One Networks, Inc.	Ajay Garg	Affirmative	View
1	Idaho Power Company	Ronald D. Schellberg	Affirmative	
1	International Transmission Company Holdings Corp	Michael Moltane	Negative	View
1	Kansas City Power & Light Co.	Michael Gammon	Negative	View
1	Keys Energy Services	Stan T. Rzad	Negative	View
1	Lake Worth Utilities	Walt Gill	Affirmative	
1	Lakeland Electric	Larry E Watt	Affirmative	
1	Lincoln Electric System	Doug Bantam		
1	Long Island Power Authority	Robert Ganley	Affirmative	View
1	Lower Colorado River Authority	Martyn Turner	Affirmative	
1	Manitoba Hydro	Michelle Rheault	Affirmative	
1	Metropolitan Water District of Southern California	Ernest Hahn	Abstain	
1	MidAmerican Energy Co.	Terry Harbour	Negative	View
1	Minnesota Power, Inc.	Randi Woodward	Affirmative	
1	National Grid	Saurabh Saksena	Affirmative	View
1	Nebraska Public Power District	Richard L. Koch	Affirmative	
1	New York Power Authority	Arnold J. Schuff	Affirmative	
1	Northeast Utilities	David H. Boguslawski	Negative	View
1	NorthWestern Energy	John Canavan	Affirmative	
1	Ohio Valley Electric Corp.	Robert Mattey	Affirmative	
1	Oklahoma Gas and Electric Co.	Marvin E VanBebber	Affirmative	
1	Omaha Public Power District	Douglas G Peterchuck	Negative	
1	Orlando Utilities Commission	Brad Chase	Affirmative	
1	Otter Tail Power Company	Lawrence R. Larson	Affirmative	
1	Pacific Gas and Electric Company	Chifong L. Thomas	Affirmative	View
1	PacifiCorp	Mark Sampson	Negative	
1	PECO Energy	Ronald Schloendorn	Affirmative	
1	Platte River Power Authority	John C. Collins	Negative	View
1	Potomac Electric Power Co.	Richard J Kafka	Affirmative	View
1	PowerSouth Energy Cooperative	Larry D. Avery	Negative	
1	PPL Electric Utilities Corp.	Brenda L Truhe	Affirmative	View
1	Public Service Company of New Mexico	Laurie Williams	Negative	View
1	Public Service Electric and Gas Co.	Kenneth D. Brown	Affirmative	View
1	Public Utility District No. 1 of Chelan County	Chad Bowman	Affirmative	
1	Puget Sound Energy, Inc.	Catherine Koch		
1	Sacramento Municipal Utility District	Tim Kelley	Affirmative	
1	Salt River Project	Robert Kondziolka	Affirmative	

1	Santee Cooper	Terry L. Blackwell	Affirmative	
1	SCE&G	Henry Delk, Jr.	Negative	View
1	Seattle City Light	Pawel Krupa	Negative	View
1	South Texas Electric Cooperative	Richard McLeon	Affirmative	
1	Southern California Edison Co.	Dana Cabbell	Affirmative	
1	Southern Company Services, Inc.	Horace Stephen Williamson	Affirmative	View
1	Southern Illinois Power Coop.	William G. Hutchison	Negative	
1	Southwest Transmission Cooperative, Inc.	James L. Jones	Abstain	
1	Southwestern Power Administration	Gary W Cox	Abstain	
1	Sunflower Electric Power Corporation	Noman Lee Williams	Affirmative	
1	Tennessee Valley Authority	Larry Akens	Affirmative	
1	Tri-State G & T Association Inc.	Keith V. Carman	Affirmative	
1	Tucson Electric Power Co.	John Tolo	Negative	View
1	United Illuminating Co.	Jonathan Appelbaum	Affirmative	
1	Westar Energy	Allen Klassen	Negative	
1	Western Area Power Administration	Brandy A Dunn	Affirmative	View
1	Xcel Energy, Inc.	Gregory L Pieper	Negative	View
2	Alberta Electric System Operator	Jason L. Murray	Abstain	
2	BC Transmission Corporation	Faramarz Amjadi	Negative	
2	Electric Reliability Council of Texas, Inc.	Chuck B Manning	Affirmative	
2	Independent Electricity System Operator	Kim Warren	Affirmative	View
2	ISO New England, Inc.	Kathleen Goodman	Affirmative	
2	Midwest ISO, Inc.	Jason L Marshall	Abstain	View
2	New York Independent System Operator	Gregory Campoli		
2	PJM Interconnection, L.L.C.	Tom Bowe	Abstain	
2	Southwest Power Pool	Charles H Yeung	Abstain	
3	Alabama Power Company	Richard J. Mandes	Affirmative	View
3	Allegheny Power	Bob Reeping	Affirmative	
3	Ameren Services	Mark Peters	Negative	
3	American Electric Power	Raj Rana	Negative	View
3	Arizona Public Service Co.	Thomas R. Glock	Negative	View
3	Atlantic City Electric Company	James V. Petrella	Affirmative	View
3	BC Hydro and Power Authority	Pat G. Harrington	Abstain	
3	Bonneville Power Administration	Rebecca Berdahl	Negative	View
3	Central Lincoln PUD	Steve Alexanderson	Affirmative	
3	City of Bartow, Florida	Matt Culverhouse	Abstain	
3	City of Clewiston	Lynne Mila	Negative	
3	City of Farmington	Linda R. Jacobson	Affirmative	
3	City of Green Cove Springs	Gregg R Griffin	Negative	
3	City of Leesburg	Phil Janik	Negative	
3	ComEd	Bruce Krawczyk	Affirmative	
3	Consolidated Edison Co. of New York	Peter T Yost	Negative	View
3	Consumers Energy	David A. Lapinski	Negative	View
3	Cowlitz County PUD	Russell A Noble	Affirmative	
3	Delmarva Power & Light Co.	Michael R. Mayer	Affirmative	
3	Detroit Edison Company	Kent Kujala	Affirmative	
3	Dominion Resources Services	Michael F Gildea	Affirmative	
3	Duke Energy Carolina	Henry Ernst-Jr	Affirmative	
3	East Kentucky Power Coop.	Sally Witt	Affirmative	
3	Entergy	Joel T Plessinger	Affirmative	
3	FirstEnergy Solutions	Kevin Querry	Affirmative	View
3	Florida Power Corporation	Lee Schuster	Affirmative	
3	Gainesville Regional Utilities	Kenneth Simmons	Affirmative	
3	Georgia Power Company	Anthony L Wilson	Affirmative	View
3	Georgia System Operations Corporation	R Scott S. Barfield-McGinnis	Affirmative	
3	Great River Energy	Sam Kokkinen	Affirmative	
3	Gulf Power Company	Gwen S Frazier	Affirmative	View
3	Hydro One Networks, Inc.	Michael D. Penstone	Affirmative	
3	JEA	Garry Baker	Negative	View
3	Kansas City Power & Light Co.	Charles Locke	Negative	View
3	Kissimmee Utility Authority	Gregory David Woessner	Negative	
3	Lakeland Electric	Mace Hunter	Affirmative	View
3	Lincoln Electric System	Bruce Merrill	Negative	View
3	Los Angeles Department of Water & Power	Kenneth Silver		
3	Louisville Gas and Electric Co.	Charles A. Freibert	Affirmative	View
3	Manitoba Hydro	Greg C Parent	Affirmative	
3	MEAG Power	Steven Grego	Affirmative	

3	MidAmerican Energy Co.	Thomas C. Mielnik	Negative	View
3	Mississippi Power	Don Horsley	Affirmative	View
3	Municipal Electric Authority of Georgia	Steven M. Jackson	Affirmative	
3	Muscatine Power & Water	John S Bos	Affirmative	
3	New York Power Authority	Marilyn Brown	Affirmative	
3	Niagara Mohawk (National Grid Company)	Michael Schiavone	Affirmative	View
3	Northern Indiana Public Service Co.	William SeDoris	Negative	
3	Ocala Electric Utility	David T. Anderson	Affirmative	
3	Orlando Utilities Commission	Ballard Keith Mutters	Abstain	
3	PacifiCorp	John Apperson	Negative	
3	PECO Energy an Exelon Co.	Vincent J. Catania	Affirmative	
3	Platte River Power Authority	Terry L Baker	Negative	View
3	Potomac Electric Power Co.	Robert Reuter		
3	Progress Energy Carolinas	Sam Waters	Affirmative	
3	Public Service Electric and Gas Co.	Jeffrey Mueller	Affirmative	
3	Public Utility District No. 1 of Chelan County	Kenneth R. Johnson	Abstain	
3	Public Utility District No. 2 of Grant County	Greg Lange	Negative	View
3	Sacramento Municipal Utility District	James Leigh-Kendall	Affirmative	
3	Salem Electric	Anthony Schacher	Affirmative	
3	Salt River Project	John T. Underhill	Affirmative	
3	San Diego Gas & Electric	Scott Peterson	Negative	
3	Santee Cooper	Zack Dusenbury	Affirmative	
3	Seattle City Light	Dana Wheelock	Negative	View
3	Southern California Edison Co.	David Schiada	Affirmative	
3	Springfield Utility Board	Jeff Nelson	Affirmative	
3	Tampa Electric Co.	Ronald L Donahey	Affirmative	
3	Tri-State G & T Association Inc.	Janelle Marriott	Affirmative	
3	Wisconsin Electric Power Marketing	James R. Keller	Negative	View
3	Wisconsin Public Service Corp.	Gregory J Le Grave	Affirmative	
3	Xcel Energy, Inc.	Michael Ibold	Negative	View
4	Alliant Energy Corp. Services, Inc.	Kenneth Goldsmith	Negative	
4	American Municipal Power - Ohio	Kevin Koloini	Negative	
4	American Public Power Association	Allen Mosher	Affirmative	
4	City of Clewiston	Kevin McCarthy	Negative	
4	City of New Smyrna Beach Utilities Commission	Timothy Beyrle	Negative	
4	Consumers Energy	David Frank Ronk	Negative	View
4	Cowlitz County PUD	Rick Syring	Affirmative	
4	Detroit Edison Company	Daniel Herring	Affirmative	
4	Florida Municipal Power Agency	Frank Gaffney	Affirmative	View
4	Fort Pierce Utilities Authority	Thomas W. Richards	Negative	View
4	Georgia System Operations Corporation	Guy Andrews	Affirmative	
4	Illinois Municipal Electric Agency	Bob C. Thomas	Affirmative	View
4	Integrys Energy Group, Inc.	Christopher Plante	Negative	View
4	Madison Gas and Electric Co.	Joseph G. DePoorter	Negative	View
4	Ohio Edison Company	Douglas Hohlbaugh	Affirmative	View
4	Old Dominion Electric Coop.	Mark Ringhausen	Affirmative	View
4	Public Utility District No. 1 of Douglas County	Henry E. LuBean	Affirmative	
4	Public Utility District No. 1 of Snohomish County	John D. Martinsen		
4	Sacramento Municipal Utility District	Mike Ramirez	Affirmative	
4	Seattle City Light	Hao Li	Negative	View
4	Seminole Electric Cooperative, Inc.	Steven R Wallace		
4	South Mississippi Electric Power Association	Steve McElhaney		
4	Wisconsin Energy Corp.	Anthony Jankowski	Negative	View
4	Y-W Electric Association, Inc.	James A Ziebarth	Affirmative	View
5	AEP Service Corp.	Brock Ondayko	Negative	View
5	Amerenue	Sam Dwyer	Negative	
5	APS	Mel Jensen	Negative	View
5	Avista Corp.	Edward F. Groce	Negative	
5	Black Hills Corp	George Tatar	Negative	
5	Bonneville Power Administration	Francis J. Halpin	Affirmative	
5	Chelan County Public Utility District #1	John Yale	Negative	View
5	City of Grand Island	Jeff Mead	Negative	View
5	City of Tallahassee	Alan Gale	Affirmative	
5	City Water, Light & Power of Springfield	Karl E. Kohlrus	Affirmative	
5	Consolidated Edison Co. of New York	Wilket (Jack) Ng	Negative	

5	Constellation Power Source Generation, Inc.	Amir Y Hammad	Negative	View
5	Consumers Energy	James B Lewis	Affirmative	
5	Cowlitz County PUD	Bob Essex	Affirmative	
5	Dominion Resources, Inc.	Mike Garton	Affirmative	
5	Duke Energy	Robert Smith	Negative	
5	Dynegy Inc.	Dan Roethemeyer	Affirmative	
5	East Kentucky Power Coop.	Stephen Ricker	Affirmative	
5	Energy Northwest - Columbia Generating Station	Doug Ramey	Affirmative	
5	Entegra Power Group, LLC	Kenneth Parker	Negative	View
5	Entergy Corporation	Stanley M Jaskot	Affirmative	
5	FirstEnergy Solutions	Kenneth Dresner	Affirmative	View
5	Florida Municipal Power Agency	David Schumann	Affirmative	View
5	Green Country Energy	Greg Froehling	Affirmative	
5	Horizon Wind Energy	Brent Hebert	Affirmative	
5	Indeck Energy Services, Inc.	Rex A Roehl	Affirmative	
5	JEA	Donald Gilbert	Abstain	
5	Kansas City Power & Light Co.	Scott Heidtbrink	Negative	View
5	Kissimmee Utility Authority	Mike Blough	Negative	
5	Lakeland Electric	Thomas J Trickey	Negative	
5	Liberty Electric Power LLC	Daniel Duff	Affirmative	
5	Lincoln Electric System	Dennis Florom	Negative	View
5	Louisville Gas and Electric Co.	Charlie Martin	Affirmative	
5	Luminant Generation Company LLC	Mike Laney	Affirmative	
5	Manitoba Hydro	Mark Aikens	Affirmative	
5	Massachusetts Municipal Wholesale Electric Company	David Gordon	Affirmative	
5	New Harquahala Generating Co. LLC	Nicholas Q Hayes	Affirmative	
5	New York Power Authority	Gerald Mannarino	Negative	
5	Northern Indiana Public Service Co.	Michael K Wilkerson	Negative	
5	Otter Tail Power Company	Stacie Hebert	Affirmative	
5	PacifiCorp	Sandra L. Shaffer	Negative	
5	Portland General Electric Co.	Gary L Tingley		
5	PowerSouth Energy Cooperative	Tim Hattaway	Abstain	
5	PPL Generation LLC	Mark A Heimbach	Negative	View
5	Progress Energy Carolinas	Wayne Lewis	Affirmative	View
5	PSEG Power LLC	David Murray	Affirmative	View
5	Public Utility District No. 1 of Lewis County	Steven Grega	Negative	
5	Reedy Creek Energy Services	Bernie Budnik	Negative	
5	RRI Energy	Thomas J. Bradish	Affirmative	
5	Sacramento Municipal Utility District	Bethany Wright	Affirmative	
5	Salt River Project	Glen Reeves	Affirmative	View
5	San Diego Gas & Electric	Daniel Baerman	Negative	
5	Seattle City Light	Michael J. Haynes	Negative	View
5	Seminole Electric Cooperative, Inc.	Brenda K. Atkins		
5	South Carolina Electric & Gas Co.	Richard Jones		
5	South Mississippi Electric Power Association	Jerry W Johnson	Negative	
5	Southern Company Generation	William D Shultz	Negative	View
5	Tampa Electric Co.	RJames Rocha		
5	Tenaska, Inc.	Scott M. Helyer	Affirmative	
5	Tennessee Valley Authority	George T. Ballew	Affirmative	
5	TransAlta Centralia Generation, LLC	Joanna Luong-Tran	Abstain	
5	Tri-State G & T Association Inc.	Barry Ingold	Affirmative	
5	U.S. Army Corps of Engineers Northwestern Division	Karl Bryan	Affirmative	
5	U.S. Bureau of Reclamation	Martin Bauer P.E.	Negative	View
5	Wisconsin Electric Power Co.	Linda Horn	Negative	View
5	Wisconsin Public Service Corp.	Leonard Rentmeester	Negative	
5	Xcel Energy, Inc.	Liam Noailles	Negative	View
6	AEP Marketing	Edward P. Cox	Negative	
6	Ameren Energy Marketing Co.	Jennifer Richardson	Negative	
6	Bonneville Power Administration	Brenda S. Anderson	Affirmative	
6	Cleco Power LLC	Matthew D Cripps	Affirmative	
6	Consolidated Edison Co. of New York	Nickesha P Carrol	Negative	View
6	Constellation Energy Commodities Group	Brenda Powell	Negative	
6	Dominion Resources, Inc.	Louis S Slade	Affirmative	View
6	Duke Energy Carolina	Walter Yeager	Affirmative	
6	Entergy Services, Inc.	Terri F Benoit	Negative	View

6	Eugene Water & Electric Board	Daniel Mark Bedbury	Affirmative	
6	Exelon Power Team	Pulin Shah	Affirmative	
6	FirstEnergy Solutions	Mark S Travaglianti	Affirmative	View
6	Florida Municipal Power Agency	Richard L. Montgomery	Affirmative	View
6	Florida Municipal Power Pool	Thomas E Washburn	Negative	View
6	Florida Power & Light Co.	Silvia P Mitchell	Affirmative	View
6	Great River Energy	Donna Stephenson	Affirmative	
6	Kansas City Power & Light Co.	Thomas Saitta	Negative	View
6	Lakeland Electric	Paul Shipps	Affirmative	
6	Lincoln Electric System	Eric Ruskamp	Negative	View
6	Louisville Gas and Electric Co.	Daryn Barker	Affirmative	
6	Luminant Energy	Brad Jones	Affirmative	
6	Manitoba Hydro	Daniel Prowse	Affirmative	
6	New York Power Authority	Thomas Papadopoulos	Negative	
6	Northern Indiana Public Service Co.	Joseph O'Brien	Negative	View
6	Omaha Public Power District	David Ried	Negative	
6	OTP Wholesale Marketing	Bruce Glorvigen	Affirmative	
6	Progress Energy	James Eckelkamp	Affirmative	
6	PSEG Energy Resources & Trade LLC	James D. Hebson	Affirmative	View
6	Public Utility District No. 1 of Chelan County	Hugh A. Owen	Negative	View
6	RRI Energy	Trent Carlson	Affirmative	
6	Santee Cooper	Suzanne Ritter	Affirmative	
6	Seattle City Light	Dennis Sismaet	Negative	View
6	Seminole Electric Cooperative, Inc.	Trudy S. Novak		
6	South Carolina Electric & Gas Co.	Matt H Bullard	Abstain	
6	Tennessee Valley Authority	Marjorie S. Parsons	Affirmative	
6	Western Area Power Administration - UGP Marketing	John Stonebarger	Affirmative	
6	Xcel Energy, Inc.	David F. Lemmons	Negative	View
8		Roger C Zaklukiewicz	Negative	View
8		James A Maenner	Abstain	
8		Kristina M. Loudermilk	Affirmative	
8		Merle Ashton	Affirmative	
8	Ascendant Energy Services, LLC	Raymond Tran	Affirmative	
8	JDRJC Associates	Jim D. Cyrulewski	Negative	View
8	Pacific Northwest Generating Cooperative	Margaret Ryan	Abstain	
8	Power Energy Group LLC	Peggy Abbadini		
8	SPS Consulting Group Inc.	Jim R Stanton	Negative	View
8	Utility Services, Inc.	Brian Evans-Mongeon	Negative	View
8	Volkmann Consulting, Inc.	Terry Volkmann	Affirmative	
9	California Energy Commission	William Mitchell Chamberlain	Negative	View
9	Commonwealth of Massachusetts Department of Public Utilities	Donald E. Nelson	Affirmative	
9	National Association of Regulatory Utility Commissioners	Diane J. Barney	Affirmative	
9	Oregon Public Utility Commission	Jerome Murray	Abstain	
9	Public Service Commission of South Carolina	Philip Riley	Affirmative	
9	Utah Public Service Commission	Ric Campbell	Affirmative	
10	Florida Reliability Coordinating Council	Linda Campbell	Abstain	
10	Midwest Reliability Organization	Dan R. Schoenecker	Negative	View
10	New York State Reliability Council	Alan Adamson	Negative	
10	Northeast Power Coordinating Council, Inc.	Guy V. Zito	Negative	
10	ReliabilityFirst Corporation	Jacquie Smith	Affirmative	
10	SERC Reliability Corporation	Carter B Edge	Affirmative	
10	Western Electricity Coordinating Council	Louise McCarren	Abstain	

Copyright © 2010 by the North American Electric Reliability Corporation. : All rights reserved.
A New Jersey Nonprofit Corporation

Consideration of Comments on Second Ballot — Project 2007-17 Protection System Maintenance (Protection System definition)

Date of Second Ballot: 07/23/10 - 08/02/10

Summary Consideration: There were numerous comments opposing balloting the definition separately from the definition; the NERC BOT has directed that a revised definition be approved as quickly as possible to close a reliability gap. Many other comments were offered relative to the standard, not the definition, and the SDT noted this in its responses.

Some commenters suggested the "station dc supply" portion of the definition be modified to specifically address battery chargers; the SDT modified the definition as suggested. The revised definition is shown below:

Protection System –

- Protective relays which respond to electrical quantities,
- Communications systems necessary for correct operation of protective functions,
- Voltage and current sensing devices providing inputs to protective relays,
- Station dc supply associated with protective functions (including station batteries, battery chargers, and non-battery-based dc supply), and
- Control circuitry associated with protective functions through the trip coil(s) of the circuit breakers or other interrupting devices.

The SDT did not make any other modifications to the definition and did not make any modifications to the implementation plan based on stakeholder comments submitted with ballots.

If you feel that the drafting team overlooked your comments, please let us know immediately. Our goal is to give every comment serious consideration in this process. If you feel there has been an error or omission, you can contact the Vice President and Director of Standards, Herb Schrayshuen, at 609-452-8060 or at herb.schrayshuen@nerc.net. In addition, there is a NERC Reliability Standards Appeals Process.[1]

[1] The appeals process is in the Reliability Standards Development Procedure: http://www.nerc.com/files/RSDP_V6_1_12Mar07.pdf.

Voter	Entity	Segment	Vote	Comment
Kirit S. Shah	Ameren Services	1	Negative	1. Remove “devices providing” yielding ‘voltage and current sensing inputs to protective relays’. This will match the SDT intent with which we concur. "The definition has been changed for clarity; the SDT intends that the output of these devices, measured at the relay should properly represent the primary quantities." 2. The 12 month implementation plan is an improvement, but will result in multiple maintenance plan changes within a short time. We believe that the implementation of the revised definition and PRC-005-2 PSMP must align on the same date.
Response: Thank you for your comments. 1. The definition of Protection System is for all applications of this term throughout NERC Standards. The detailed applicability of this element of the definition relative to maintenance within PRC-005-2 is addressed within the standard by specifying, “Verify that acceptable measurements of the current and voltage signals are received by the protective relays”. 2. When the Board of Trustees was asked to approve an interpretation of PRC-005-1 that was written by the PSMT SDT, the board acknowledged the reliability gap identified by the drafting team caused by the definition of "protection system" and directed that work to close this reliability gap should be given “priority.” To close this reliability gap the BOT has directed that revised definition be applied to PRC-005-1 as soon as practical - not years from now. The implementation plan now proposes at least 12 months for entities to apply the new definition to PRC-005-1, and that should give entities time to apply the new definition to PRC-005-1.				
Terri F Benoit	Entergy Services, Inc.	6	Negative	2007-17 the definition - Negative with Comments: The following are the reasons associated with our Negative Ballot. 1. We agree with the definition, however we do not agree with the implementation plan. We believe implementation of the definition needs to coincide with the implementation of Standard PRC-005-2. To do otherwise, will cause entities to address equipment, documentation, work management process, and employee training changes needed for compliance twice within an unreasonably short timeframe. 2. A 12 month minimum timeframe is need to implement this definition
Response: Thank you for your comments.				

Voter	Entity	Segment	Vote	Comment
1. When the Board of Trustees was asked to approve an interpretation of PRC-005-1 that was written by the PSMT SDT, the board acknowledged the reliability gap identified by the drafting team caused by the definition of "protection system" and directed that work to close this reliability gap should be given "priority." To close this reliability gap the BOT has directed that revised definition be applied to PRC-005-1 as soon as practical - not years from now. The implementation plan now proposes at least 12 months for entities to apply the new definition to PRC-005-1, and that should give entities time to apply the new definition to PRC-005-1. 2. The SDT modified the implementation plan to provide a 12-month implementation period with the previous posting.				
Brenda L Truhe	PPL Electric Utilities Corp.	1	Affirmative	Although PPL EU previously voted against this definition, due to the change in language, we now support this definition.
Response: Thank you for your comments.				
John C. Collins	Platte River Power Authority	1	Negative	Although the applicable relays to which protective relays are outlined in the NERC PRC-005-2 Protection system Maintenance Draft Supplementary Reference dated May 27, 2010, they are not defined in the NERC Glossary of terms. Until it is clearly defined which relays are included inconsistencies will exists from region to region in their audit approaches and which relays they will be looking at. Also, there is still debate why the protective relays would extend to mechanical devices such as the lock-out relay and tripping for trip-free relays. In our system configuration we risk reliability to customer load by testing the lock-out relays which we feel out weights the benefit of testing devices that we see little to no evidence of failure in.
Terry L Baker	Platte River Power Authority	3	Negative	
Response: Thank you for your comments. The definition of Protection System is for all applications of this term throughout NERC Standards. The detailed applicability of the definition relative to maintenance within PRC-005-2 is addressed within the standard. Your comments appear to be on the draft standard PRC-005-2, rather than on the definition. Failure of a lock-out relay or tripping relay can keep a circuit (or multiple circuits) from clearing a fault. Routine testing of these devices could find problems before the system needs them to clear a fault.				
Mel Jensen	APS	5	Negative	Although the SDT has made changes in trying to define the Protection System the definition remains too prescriptive. In particular, the devices providing current and voltage inputs as well as the dc supply. These items are also used for other functions not related to the reliability of the BES. They are critical to business and operation of the generating systems and not solely dedicated to protective relaying. Including them in the definition obligates the utility to methods where there should be some discretion.
Robert D Smith	Arizona Public Service Co.	1	Negative	

Voter	Entity	Segment	Vote	Comment
Response: Thank you for your comments. The SDT is aware that many devices have multiple functions within the business of supplying power to loads. Regardless of these other functions, if a device is a part of a Protection System then it must be maintained in accordance withPRC-005. The definition of Protection System is for all applications of this term throughout NERC Standards. The detailed applicability of the definition relative to maintenance within PRC-005-2 is addressed within the standard.				
Stan T. Rzad	Keys Energy Services	1	Negative	As written, is opens up the PRC-005 standard to Technical Feasibility Exceptions because some batteries are not able to accommodate all of the tests proscribed in the draft standard. The draft standard would cause NERC to regulate through the standards battery testing, DC circuit testing, etc. on distribution elements with no significant improvement to BES reliability, which is beyond the statutary scope of the standards The standard unreasonably retains the "100% compliance" paradigm for thousands, if not millions of protection system components.
Response: Thank you for your comments. Your comments appear to be relative to the draft standard PRC-005-2, rather than the definition. The SDT had not completed the consideration of comments on the standard when the definition was re-posted. The SDT has responded to similar comments within the responses to ballot comments and the consideration of comments on the standard itself.				
Joseph S. Stonecipher	Beaches Energy Services	1	Negative	Because the definition changes the scope of what PRC-005 covers, the definition should not be balloted separately from PRC-005 so that the industry knows what is being committed to. What happens if the standard is voted down but the definition change is passed? For instance, the circuitry connecting the voltage and current sensing devices to the relays is a scope expansion. Station DC supply increases the scope to include the charger, etc. This scope increase needs to have an appropriate implementation period.
Thomas W. Richards	Fort Pierce Utilities Authority	4	Negative	
Response: Thank you for your comments. When the Board of Trustees was asked to approve an interpretation of PRC-005-1 that was written by the PSMT SDT, the board acknowledged the reliability gap identified by the drafting team caused by the definition of "protection system" and directed that work to close this reliability gap should be given “priority.” To close this reliability gap the BOT has directed that revised definition be applied to PRC-005-1 as soon as practical - not years from now. The implementation plan now proposes at least 12 months for entities to apply the new definition to PRC-005-1, and that should give entities time to apply the new definition to PRC-005-1.				
Paul Rocha	CenterPoint Energy	1	Negative	CenterPoint Energy does not support any Protection System definition that includes the trip coils of the interrupting devices.
Response: Thank you for your comments. The current definition includes “DC Control Circuitry”; the SDT attempted to clarify the definition by stating which				

Voter	Entity	Segment	Vote	Comment
of the many control circuits are included. Because the current definition is vague, it can certainly include the trip coils, close coils, and alarm circuits of the interrupting device. The SDT believes that the electrically-operated trip coils are an important part of the control circuitry.				
Christopher L de Graffenried	Consolidated Edison Co. of New York	1	Negative	Comment: There is not enough clarity on whether a Distribution Provider (DP) will be able to clearly identify which protection system components it does own and needs to maintain. Many DPs own and/or operate equipment identified in the existing or proposed definition. However, not all such equipment translates into a transmission Protection System. The definition needs clarification on when such equipment is a part of the transmission protection system. Also, the time provided for the first phase "at least six months" is too open ended and does not provide entities with a clear timeline. It is suggested that one year is appropriate for the first phase phasing out the second year in stages.
Nickesha P Carrol	Consolidated Edison Co. of New York	6	Negative	
Response: Thank you for your comments. Your comments appear to be relative to the draft standard PRC-005-2, rather than the definition. The SDT had not completed consideration of comments on the standard when the definition was re-posted. The SDT has responded to similar comments within the responses to ballot comments and the consideration of comments on the standard itself. Regarding the comment that the definition needs to identify when equipment is part of the transmission system, this is properly an issue to address in the various standards that use this definition.				
Hugh A. Owen	Public Utility District No. 1 of Chelan County	6	Negative	Comments have convinced me that ambiguities in the requirements will make compliance/enforcement difficult and the testing procedures may not lead to greater reliability.
Response: Thank you for your comments. Your comments appear to be relative to the draft standard PRC-005-2, rather than the definition. The SDT had not completed the consideration of comments on the standard when the definition was re-posted. The SDT has responded to similar comments within the responses to ballot comments and the consideration of comments on the standard itself.				
Charles A. Freibert	Louisville Gas and Electric Co.	3	Affirmative	Comments will be submitte4d under the comment form
Response: Thank you for your comments. There was no formal comment period with the second ballot of the proposed definition.				

Voter	Entity	Segment	Vote	Comment
Ralph Frederick Meyer	Empire District Electric Co.	1	Negative	Comments: It is still unclear whether relays that respond to mechanical inputs, such as sudden pressure relays, are included in the proposed definition as protective relays. While PRC-005-2 R1 limits the scope of that particular standard to protection systems that sense electrical quantities, it is remains unclear in other standards that use the defined term whether mechanical input protections are included. We suggest that "Protective Relay" also be defined, and that the definition clearly exclude devices that respond to mechanical inputs in line with the NERC interpretation of PRC-005-1 in response to the CMPWG request.
Response: Thank you for your comments. The definition has been modified to include only protective relays that respond to electrical quantities. The SDT sees no need to either repeat or modify the IEEE definition of protective relays.				
Michael J. Haynes	Seattle City Light	5	Negative	Control circuitry associated with protective functions through the trip coil(s) of the circuit breakers or other interrupting devices. - In order to comply with this statement utilities would need to conduct functional tests of their relay system. This type of test is problematic. A better definition would be to test the output of the relay.
Response: Thank you for your comments. This component of the Protection System definition is to generally include this functionality as a part of the Protection System for all applications of the definition throughout NERC Standards. The detailed applicability of this component relative to maintenance within PRC-005-2 is addressed within the standard, which defines the maintenance required relative to control circuits. The SDT agrees that testing will be required in the standard itself.				
Jim D. Cyrulewski	JDRJC Associates	8	Negative	1. Definition needs to be more specific. Case in point if the drafting team wants to include battery chargers should state so. 2. Also implementation plan does not appear to be in synch with proposed changes.
Response: Thank you for your comments. 1. The current definition uses the term batteries in place of dc supply. The use of the term batteries was quite specific and as such excluded battery chargers. The definition has been modified to specifically include battery chargers. Battery chargers are now expected to be covered within the proposed definition and the term dc supply, so too are systems that do not use batteries and/or battery chargers. 2. When the Board of Trustees was asked to approve an interpretation of PRC-005-1 that was written by the PSMT SDT, the board acknowledged the reliability gap identified by the drafting team caused by the definition of "protection system" and directed that work to close this reliability gap should be given				

Voter	Entity	Segment	Vote	Comment
"priority." To close this reliability gap the BOT has directed that revised definition be applied to PRC-005-1 as soon as practical - not years from now. The implementation plan now proposes at least 12 months for entities to apply the new definition to PRC-005-1, and that should give entities time to apply the new definition to PRC-005-1.				
Daniel Brotzman	Commonwealth Edison Co.	1	Affirmative	Exelon suggests that the definition further clarify protective relays that are in scope by adding the following to the frequently asked questions: 1. "devices providing inputs to protective relays" - this is to clarify that testing for CTs and PTs will only ensure proper voltage and current into the relay - therefore not requiring CT and PT testing. 2. Elimination of "from the station dc supply" - the intent here is that the DC is testing only the trip functionality to ensure that certain relays actuate (e.g., 86 and 94 devices) and to ensure that breaker trip coils are exercised on a 6 year periodicity. Therefore, the ancillary wiring part of the controls will be on a longer periodicity (e.g., 12 years)
Response: Thank you for your comments. Your comments appear to be relative to the FAQs for PRC-005-2, rather than the definition. The SDT will consider these comments when it updates the FAQs.				
Robert Martinko	FirstEnergy Energy Delivery	1	Affirmative	FirstEnergy appreciates the hard work of the drafting team, but ask that the team consider the following suggestions: It is our understanding that the phrase "Station DC supply" in the definition is intended to cover the Battery, Battery Charger, and other DC supplies sources such as flywheels, fuel cells, and motor-generator sets. However, since the current Protection System Maintenance and Testing standard PRC-005-1 does not specify maintenance activities, as does the proposed Version 2 of PRC-005, it therefore does not provide compliance certainty related to mandatory expectations. This is because the current standard only requires that an entity develop a maintenance program and follows their program. Therefore, it is not clear from the definition that Battery Chargers must be included in the maintenance program developed per PRC-005-1. As we stated in our Initial Ballot comments, the phrase "Station DC supply" should be clarified. In response to our Initial Ballot comments the SDT stated "Clarifications such as this properly belong in supplementary materials. This is described in the FAQ posted in June 2010 (FAQ II.5.A)". We do not agree that supplementary materials should be relied upon to determine
Kevin Querry	FirstEnergy Solutions	3	Affirmative	
Kenneth Dresner	FirstEnergy Solutions	5	Affirmative	
Mark S Travaglianti	FirstEnergy Solutions	6	Affirmative	
Douglas Hohlbaugh	Ohio Edison Company	4	Affirmative	

Voter	Entity	Segment	Vote	Comment
				"what" is required and should only give you guidance on "how" to comply. The "what" should be described in the standard requirements and definitions.
Response: Thank you for your comments. It is the intent of the SDT that battery chargers and other devices that supply power to Protection System devices be included within the definition. As such, those devices have been included within the minimum maintenance activities of PRC-005-2. However, in the interim before PRC-005-2 is accepted, under the present PRC-005-1 an entity must have a maintenance program that includes the devices within the definition. PRC-005-1 does not prescribe the maintenance, only that the PSMP must include maintenance for the device. The definition has been modified to specifically include battery chargers.				
Pawel Krupa	Seattle City Light	1	Negative	Functional testing is impractical.
Dana Wheelock	Seattle City Light	3	Negative	
Hao Li	Seattle City Light	4	Negative	
Response: Thank you for your comments. The definition of Protection System is for all applications of this term throughout NERC Standards. The detailed applicability of this element relative to maintenance within PRC-005-2 is addressed within the standard, which defines the maintenance required relative to control circuits. Your comments appear to be relative to the draft standard PRC-005-2, rather than the definition. The SDT had not completed the consideration of comments on the standard when the definition was re-posted. The SDT has responded to similar comments within the responses to ballot comments and the consideration of comments on the standard itself. The SDT agrees that testing will be required in the standard itself.				
Dennis Sismaet	Seattle City Light	6	Negative	Functional testing is impractical. Control circuitry associated with protective functions through the trip coil(s) of the circuit breakers or other interrupting devices. - " In order to comply with this statement utilities would need to functional test their relay system. A better definition would be to test the output of the relay"
Response: Thank you for your comments. The definition of Protection System is for all applications of this term throughout NERC Standards. The detailed applicability of this element relative to maintenance within PRC-005-2 is addressed within the standard, which defines the maintenance required relative to control circuits. Your comments appear to be relative to the draft standard PRC-005-2, rather than the definition. The SDT had not completed the consideration of comments on the standard when the definition was re-posted. The SDT has responded to similar comments within the responses to ballot comments and the consideration of comments on the standard itself. The SDT agrees that testing will be required in the standard itself.				
Mark Ringhausen	Old Dominion Electric Coop.	4	Affirmative	I am voting Yes on the ballot, but I do have a small issue with the wording of 'station DC supply'. In some of our UFLS locations, we are not in a substation, but out on the feeder circuit and utilizing the DC supply on the feeder recloser. I think my reading of this definition would apply to this recloser DC supply as well as the

Voter	Entity	Segment	Vote	Comment
				Station DC Supply.
Response: Thank you for your comments. Your concern is appreciated. A review of the standard itself shows that the dc supply maintenance activities are minimal related to UFLS.				
Jeff Mead	City of Grand Island	5	Negative	I echo MRO NSRS comments.
Response: Thank you for your comments. The station dc supply element has been modified essentially as you suggest. As to your suggestion regarding inclusion of "BES' within the definition – this is properly an issue to address in the various standards that use this definition.				
John Yale	Chelan County Public Utility District #1	5	Negative	If the new definition is: The new proposed definition of Protection System reads as follows: Protection System: o Protective relays which respond to electrical quantities, o Communications systems necessary for correct operation of protective functions, o Voltage and current sensing devices providing inputs to protective relays, o Station dc supply, and o Control circuitry associated with protective functions through the trip coil(s) of the circuit breakers or other interrupting devices. In this list format, it appears it is the entire station dc supply not just that portion and circuitry associated with the protective circuits. This is an unreasonable burden as many parts of the station dc supply are used for non-protective functions.
Response: Thank you for your comments. The SDT has modified the definition in consideration of your comments. That bullet now reads: station dc supply associated with protective functions (including station batteries, battery chargers, and non-battery-based dc supply)				
Joseph O'Brien	Northern Indiana Public Service Co.	6	Negative	1. It is still not clear whether battery chargers fall under this definition. 2. The implementation plan should be coordinated with the new PRC-005-2, not -1. 3. It's not clear if a breaker trip has to be actuated to test/maintain the control circuitry through the trip coils.

Voter	Entity	Segment	Vote	Comment
Response: Thank you for your comments. 1. The definition has been modified to specifically include battery chargers. 2. When the Board of Trustees was asked to approve an interpretation of PRC-005-1 that was written by the PSMT SDT, the board acknowledged the reliability gap identified by the drafting team caused by the definition of "protection system" and directed that work to close this reliability gap should be given "priority." To close this reliability gap the BOT has directed that revised definition be applied to PRC-005-1 as soon as practical - not years from now. The implementation plan now proposes at least 12 months for entities to apply the new definition to PRC-005-1, and that should give entities time to apply the new definition to PRC-005-1. 3. The draft standard PRC-005-2 includes the minimum maintenance activities. Until PRC-005-2 is approved, you need to define the activities and provide a basis for those activities in accordance with PRC-005-1.				
Thomas E Washburn	Florida Municipal Power Pool	6	Negative	It is still unclear whether relays that respond to mechanical inputs, such as sudden pressure relays, are included in the proposed definition as protective relays. While PRC-005-2 R1 limits the scope of that particular standard to protection systems that sense electrical quantities, it is remains unclear in other standards that use the defined term whether mechanical input protections are included. We suggest that "Protective Relay" also be defined, and that the definition clearly exclude devices that respond to mechanical inputs in line with the NERC interpretation of PRC-005-1 in response to the CMPWG request
Response: Thank you for your comments. The definition has been modified to include only protective relays that respond to electrical quantities. The SDT sees no need to either repeat or modify the IEEE definition of protective relays.				
Frank Gaffney	Florida Municipal Power Agency	4	Affirmative	It is unclear in the Implementation Plan if the expectation is to complete the first maintenance and testing cycle, or whether the entities need to be auditably compliant within the one year implementation plan, e.g., prove that they have performed maintenance and testing within the interval defined in the maintenance and testing program of R1, which essentially could mean two maintenances and tests of the same component during the first year for the components identified in the expansion of scope of the definition of Protection System (e.g., battery charger). We encourage the SDT to make this crystal clear, i.e.,, is only the first maintenance and test needed as long as the end of the maintenance and testing interval identified in the maintenance
David Schumann	Florida Municipal Power Agency	5	Affirmative	
Richard L. Montgomery	Florida Municipal Power Agency	6	Affirmative	
Bob C. Thomas	Illinois Municipal Electric Agency	4	Affirmative	

Voter	Entity	Segment	Vote	Comment
				and testing program of R1 has not been reached yet, or are two maintenance and tests needed to be auditably compliant?
Response: Thank you for your comments. The SDT observes that the implementation plan for the definition requires that the entity implement the revised program. The implementation plan also requires completion of maintenance within one full cycle of the revised program.				
Martin Bauer P.E.	U.S. Bureau of Reclamation	5	Negative	1. It is unfortunate that the definition did not retain consistency in the terms. As an example, the definition indicates it includes protective relays and communication systems for the correct operation of protective functions. It would have been better to use the term relays instead of the term functions. 2. Now it is unclear what the communication systems are for, since a different term was used rather than protective relays. Since it is not clear what the communications have to do with protective relays, as it may also include those that do not just respond to electrical quantities, the definition cannot be used to support the standard. 3. The change to insert the term "devices providing" when referring to voltage and current sensing unfortunately eliminates the circuitry form the voltage and current sensing devices to the relays. This was caused by inserting the word “devices”. I do not believe it was the SDT intent, however, we are in a literal word world. Since we are primarily focused on the performance of the device as a function of the burden on the device, I cannot vote in favor. My company believes the circuit from the PT and CT must be a part of the Protection System and is arguably of greater concern. Consider that if a PT or CT fails partially or completely it will be known immediately. Maintenance practices will rarely help that predict failure. On the other hand, the circuitry from the voltage and current sensing devices can have a problem that will affect relay performance through instrument transformer error and in most cases is only found through testing. Had you changed “devices” to “circuits” I would agree with providing the first issue addressed as well. The term

Voter	Entity	Segment	Vote	Comment
				"circuits" could have included both (devices and circuits), but as I explained, the latter is more important, more variable, and has been attributed to many protection system failures.
Response: Thank you for your comments. 1. "Protective relays which respond to electrical quantities" is a description intended to clarify which relays are excluded (those not responding to electrical quantities are excluded). However a different descriptor was aimed at communications devices; after all there are many communication circuits employed that are not used for protective functions (voice, alarm data, revenue data, etc.). 2. The term "communications systems necessary for correct operation of protective functions" was chosen to include all methods of conveying tripping, permissive and blocking signals that are used now or may be used in the future. The SDT saw no need to include language that might result in the inclusion of voice equipment. 3. The change to insert the term "devices providing" was to improve clarity while also excluding voltage and current measuring devices that provide data exclusively to metering equipment as opposed to Protection Systems. The SDT agrees with the commenter that an appropriate maintenance activity is to ensure that the measured voltage and current values correctly make it to the relays. The maintenance activity is a part of the standard. The absence of this activity from the definition is not intended to lead one to believe that the activity is not important.				
John J. Moraski	Baltimore Gas & Electric Company	1	Negative	It seems not to be the intention of the SDT to require testing of CT's and PT's beyond verifying that they that are delivering acceptable signals to relays. Table 1 a of the standard includes: - Voltage & Current Sensing Devices / 12 Calendar Years / Verify proper functioning of the current and voltage circuit inputs from the voltage and current sensing devices to the protective relays. The FAQ's are even clearer and say: ********** 3. Voltage and Current Sensing Device Inputs to Protective Relays A. What is meant by "…verify the current and voltage circuit inputs from the voltage and current sensing devices to the protective relays …" Do we need to perform ratio, polarity and saturation tests every few

Voter	Entity	Segment	Vote	Comment
Amir Y Hammad	Constellation Power Source Generation, Inc.	5	Negative	years? No. You must prove that the protective relay is receiving the expected values from the voltage and current sensing devices (typically voltage and current transformers). This can be as difficult as is proposed by the question (with additional testing on the cabling and substation wiring to ensure that the values arrive at the relays); or simplicity can be achieved by other verification methods. Some examples follow: - Compare the secondary values, at the relay, to a metering circuit, fed by different current transformers, monitoring the same line as the questioned relay circuit. - Compare the values, as determined by the questioned relay, to another protective relay monitoring the same line, with currents supplied by different CTs. - Query SCADA for the power flows at the far end of the line protected by the questioned relay, compare those SCADA values to the values as determined by the questioned relay. - Totalize the Watts and VARs on the bus and compare the totals to the values as seen by the questioned relay. The point of the verification procedure is to ensure that all of the individual components are functioning properly; and that, an ongoing proactive procedure is in place to re-check the various components of the protective relay measuring systems. ********** But the neither the originally revised or newly revised definitions carry that implication very well. Suppose the phrase in the definition were changed from: “Voltage and current sensing devices providing inputs to protective relays” to; “Voltage and current sensing device output circuits and the associated circuits to the inputs of protective relays”. This would make the whole definition read: Protection System: Protective relays which respond to electrical quantities, communication systems necessary for correct operation of protective functions, voltage and current sensing device output circuits and the associated circuits to the inputs of protective relays, station dc supply, and control circuitry associated with protective functions through the trip coil(s) of the circuit breakers or other interrupting devices.
Response: Thank you for your comments. Your comments appear to be relative to the draft standard PRC-005-2, rather than the definition. The SDT had not completed the consideration of comments on the standard when the definition was re-posted. The SDT has responded to similar comments within the				

Voter	Entity	Segment	Vote	Comment
responses to ballot comments and the consideration of comments on the standard itself. You have put together a complete discussion of the fact that there is more to a system than merely 5 listed devices.				
Garry Baker	JEA	3	Negative	JEA believes the change in the definition should coordinate with the new standard PRC-005-002.
Response: Thank you for your comments. When the Board of Trustees was asked to approve an interpretation of PRC-005-1 that was written by the PSMT SDT, the board acknowledged the reliability gap identified by the drafting team caused by the definition of "protection system" and directed that work to close this reliability gap should be given "priority." To close this reliability gap the BOT has directed that revised definition be applied to PRC-005-1 as soon as practical - not years from now. The implementation plan now proposes at least 12 months for entities to apply the new definition to PRC-005-1, and that should give entities time to apply the new definition to PRC-005-1.				
William Mitchell Chamberlain	California Energy Commission	9	Negative	Lack of clarity or apparent conflict between certain requirements would make compliance assessment difficult.
Response: Thank you for your comments. Your comments appear to be relative to the draft standard PRC-005-2, rather than the definition. The SDT had not completed the consideration of comments on the standard when the definition was re-posted. The SDT has responded to similar comments within the responses to ballot comments and the consideration of comments on the standard itself.				
Bruce Merrill	Lincoln Electric System	3	Negative	LES would like to thank the Drafting Team for its time and effort in developing the definition. However, at this time LES believes that the implementation plan for the definition should be directly linked to the approval and implementation schedule for PRC-005-2 and the proposed definition of Protection System is incomplete as written and remains open to interpretation. LES offers the following Protection System definition for the SDT's consideration: "Protection System" is defined as: A system that uses measurements of voltage, current, frequency and/or phase angle to determine anomalies and trips a portion of the BES and consists of 1) Protective relays, and associated auxiliary relays, that initiate trip signals to trip coils, 2) associated communications channels, 3) current and voltage transformers supplying protective relay inputs, 4) dc station supply, excluding battery chargers, and 5) dc control trip path circuitry to the trip coils of BES connected breakers, or equivalent interrupting device, and lockout relays.
Dennis Florom	Lincoln Electric System	5	Negative	
Eric Ruskamp	Lincoln Electric System	6	Negative	
Response: Thank you for your comments. When the Board of Trustees was asked to approve an interpretation of PRC-005-1 that was written by the PSMT SDT, the board acknowledged the reliability gap identified by the drafting team caused by the definition of "protection system" and directed that work to close				

Voter	Entity	Segment	Vote	Comment
this reliability gap should be given "priority." To close this reliability gap the BOT has directed that revised definition be applied to PRC-005-1 as soon as practical - not years from now. The implementation plan now proposes at least 12 months for entities to apply the new definition to PRC-005-1, and that should give entities time to apply the new definition to PRC-005-1. The SDT disagrees with several aspects of your suggested changes: Auxiliary relays are not a protective relay, but are instead a part of the dc control circuit; "associated" communication systems is too vague to address existing concerns with the definition; battery chargers specifically should NOT be excluded; and "to the trip coils" does not include trip coils as intended by the SDT. The SDT has made changes to the definition which may address other parts of your comment				
Robert Ganley	Long Island Power Authority	1	Affirmative	LIPA offers the following definition which we feel is clearer: Protective relays which respond to electrical quantities, communication systems required for operation of protective functions, voltage and current sensing devices to protective relays, station dc supply, and control circuitry from the associated protective functions through the trip coil(s) of the circuit breakers or other interrupting devices.
Response: Thank you for your comments. The SDT has adopted your suggestion regarding Protective Relays.				
Saurabh Saksena	National Grid	1	Affirmative	National Grid suggests adding "Protection System Components including" in the beginning. This is because the word "components" has been used extensively throughout the standard and there is no mention of what constitutes a protection system component in the standard. The word "component" does find mention in FAQs, however, it is recommended to mention it in the main standard. Also, National Grid proposes a change in the proposed definition (changing "voltage and current sensing inputs" to "voltage and current sensing devices providing inputs"). The revised definition should read as follows: Protective System Components including Protective relays, communication systems necessary for correct operation of protective functions, voltage and current sensing devices providing inputs to protective relays and associated circuitry from the voltage and current sensing devices, station dc supply, and control circuitry associated with protective functions from the station dc supply through the trip coil(s) of the circuit breakers or other interrupting devices. The time provided for the first phase "at least six months" is too open ended and does not give entities a clear timeline. National Grid

Voter	Entity	Segment	Vote	Comment
				suggests 1 year for the first phase. As a result, National Grid suggests phasing out the second phase in stages.
Response: Thank you for your comments. The SDT believes that inclusion of the defined term within its own definition is not appropriate, and declines to adopt your suggestion regarding the definition. The Implementation Plan and definition have both been modified in a manner that supports your comments.				
Liam Noailles	Xcel Energy, Inc.	5	Negative	NERC has indicated that this definition is being processed to close a reliability gap. It is not clear as to what gap this proposed definition is closing. The use of the term "Station DC Supply" actually introduces more confusion since some entities may view this as only batteries, and not include chargers. It would appear that the intent is to ensure that during a loss of substation service power scenario that the source of power (whatever that may be) to the Protection System is available and able to perform as designed. Recommend the definition be re-written to make it clear as to what components related to this assured source of power are required to be maintained as part of the Protection System, or alternatively define "Station DC Supply".
David F. Lemmons	Xcel Energy, Inc.	6	Negative	
Response: Thank you for your comments. The definition has been modified to specifically include battery chargers.				
David H. Boguslawski	Northeast Utilities	1	Negative	NU believes that a protection system includes: 1) Protective relays which respond to electrical quantities, 2) Communications systems necessary for correct operation of protective functions, 3) Voltage and current sensing devices providing inputs to protective relays", and associated circuitry from the voltage and current sensing devices" 4) Station dc supply, and 5) Control circuitry associated with protective functions through the trip coil(s) of the circuit breakers or other interrupting devices The proposed definition excludes "and associated circuitry from the voltage and current sensing devices" from item 3. NU believes that the associated circuitry for voltage and current sensing devices should be included. It is our concern that the proposed definition implies PRC-005 will apply specifically to the voltage and current sensing devices and not include the AC circuitry between these devices and the relay inputs.
Response: Thank you for your comments. The words of the definition were chosen to help clarify and exclude devices used exclusively for non-protective functions (metering, etc.), while the maintenance standard itself has a minimum maintenance activity that seeks to demonstrate the importance of the entire				

Voter	Entity	Segment	Vote	Comment
scheme.				
Chifong L. Thomas	Pacific Gas and Electric Company	1	Affirmative	PG&E believes the definition should identify that the protection system is associated with direct BES electrical quantities with the intention of protecting the BES from any device from propagating a problem in one part of the BES to another. The definition should not include associated systems, i.e. auxiliary systems including their transformers, motors, etc. For generating stations the protection included should only be the generator itself and its associated main bank transformer that delivers the power to the system. Likewise, for distribution substations, the protection should only include equipment such as the main transformer that draws power from the BES and not equipment such as distribution feeders.
Response: Thank you for your comments.				
James D. Hebson	PSEG Energy Resources & Trade LLC	6	Affirmative	Please reference comments submitted by the PSEG companies on the official comment form for this standard.
Response: Thank you for your comments. For this second ballot, there was no formal comment period.				
Rebecca Berdahl	Bonneville Power Administration	3	Negative	Please see BPA's comments submitted during the concurrent formal comment period ending July 16, 2010.
Response: Thank you for your comments. The SDT changed the definition following the formal comment period that ended July 16, 2010.				
Mark A Heimbach	PPL Generation LLC	5	Negative	Please see comments submitted by "PPL Supply" on 7/16/10.
Response: Thank you for your comments. The SDT changed the definition following the formal comment period that ended July 16, 2010.				
Laurie Williams	Public Service Company of New Mexico	1	Negative	PNM rejects this definition as too broad and not consistent with the way utilities treat the various items in the definition, but agrees with the proposed changes to the implementation plan.
Response: Thank you for your comments. Absent specific comments on the definition, the SDT is unable to respond to your concerns.				

Voter	Entity	Segment	Vote	Comment
Wayne Lewis	Progress Energy Carolinas	5	Affirmative	Progress Energy does not believe that the definition should be implemented separately from and prior to the implementation of PRC-005-2. We believe there should be a direct linkage between the definition's effective date to the approval and implementation schedule of PRC-005-2. Since this new definition should be directly linked to the proposed revised standard, it would be premature to make this new definition effective prior to the effective date of the new standard. We believe that changes to the maintenance program should be driven by the revision of the PRC standard, not by the revision of a definition.
Response: Thank you for your comments. When the Board of Trustees was asked to approve an interpretation of PRC-005-1 that was written by the PSMT SDT, the board acknowledged the reliability gap identified by the drafting team caused by the definition of "protection system" and directed that work to close this reliability gap should be given "priority." To close this reliability gap the BOT has directed that revised definition be applied to PRC-005-1 as soon as practical - not years from now. The implementation plan now proposes at least 12 months for entities to apply the new definition to PRC-005-1, and that should give entities time to apply the new definition to PRC-005-1.				
Kenneth D. Brown	Public Service Electric and Gas Co.	1	Affirmative	PSE&G is now voting affirmative. Thanks to the drafting team for improving the clarity of the definition.
Response: Thank you for your comments.				
Dan R. Schoenecker	Midwest Reliability Organization	10	Negative	Revise Protection System definition to: o BES Protective relays which respond to electrical quantities, o Communications systems necessary for correct operation of the BES protective functions, o Voltage and current sensing devices providing inputs to BES protective relays, o Battery and battery chargers that supply dc to BES protective relays, communications, and control circuitry, and o Control circuitry associated with the BES protective functions through the trip coil(s) of the circuit breakers or other interrupting devices.
Response: Thank you for your comments. The station dc supply component type has been modified essentially as you suggest. As to your suggestion regarding inclusion of "BES' within the definition – this is properly an issue to address in the various standards that use this definition.				

Voter	Entity	Segment	Vote	Comment
Thomas C. Mielnik	MidAmerican Energy Co.	3	Negative	Revise Protection System definition to: BES Protective relays which respond to electrical quantities, Communications systems necessary for correct operation of the BES protective functions, Voltage and current sensing devices providing inputs to BES protective relays, Battery and battery chargers that supply dc to BES protective relays, communications, and control circuitry, and Control circuitry associated with the BES protective functions through the trip coil(s) of the circuit breakers or other interrupting devices.
Response: Thank you for your comments. The station dc supply component type has been modified essentially as you suggest. As to your suggestion regarding inclusion of "BES' within the definition – this is properly an issue to address in the various standards that use this definition.				
Brian Evans-Mongeon	Utility Services, Inc.	8	Negative	see filed comments
Response: Thank you for your comments. The SDT changed the definition following the formal comment period that ended July 16, 2010; there was no formal comment period during the second ballot of the proposed definition.				
Glen Reeves	Salt River Project	5	Affirmative	SRP believes the requirements of the Standard are confusing and may be problematic in determining compliance. We also believe the required functional testing of the breaker trip coil may potentially increase maintenance outages of circuit breakers. In most cases, circuit breaker maintenance outages can be coordinated such that Protection System maintenance and testing can be done simultaneously. However, in some cases this may not be possible. Outages of any BES facility whether planned or unplanned can impact system reliability. SRP suggests that trip coil monitoring devices be included as an acceptable means of ensuring the trip coil is functioning properly. This will help to avoid unnecessary outages.
Response: Thank you for your comments. Your comments appear to be relative to the draft standard PRC-005-2, rather than the definition. The SDT had not completed the consideration of comments on the standard when the definition was re-posted. The SDT provides the following response, in accordance with the responses to comments on the standard itself.				
James V. Petrella	Atlantic City Electric Company	3	Affirmative	Suggested improvement: add "and associated circuitry" to "Voltage and current sensing devices and associated circuitry providing inputs to protective relays".

Voter	Entity	Segment	Vote	Comment
Response: Thank you for your comments. Many other commenters have previously expressed concern with the definition as you suggest, and the SDT believes that the definition as currently posted best expresses this portion of the definition.				
Thomas R. Glock	Arizona Public Service Co.	3	Negative	The change to the definition relative to the voltage and current sensing devices is too prescriptive. Methods of determining the integrity of the voltage and current inputs into the relays to ensure reliability of the devices should be up to the discretion of the utility.
Response: Thank you for your comments. Absent any specific comment regarding how the definition is too prescriptive, the SDT is unable to respond to your concerns. Your comments appear to be relative to the draft standard PRC-005-2, rather than the definition. The SDT had not completed the consideration of comments on the standard when the definition was re-posted. The SDT has responded to similar comments within the responses to ballot comments and the consideration of comments on the standard itself.				
William D Shultz	Southern Company Generation	5	Negative	The definition alone is acceptable, but the existing version of PRC-005 does not guarantee any additional maintenance or testing will occur with its ratification. Maintenance methodology documents will have to be revised to include the new definition, but entities may still dictate limited maintenance activities and lengthy intervals which require no additional maintenance to be done. The PRC-005-2 version of the standard includes this revised definition and requires specific maintenance activities at specific intervals. Establishing only a new definition does not close the perceived reliability gap that is the basis for the current vote. The new definition needs to be ratified along with the revised standard.
Response: Thank you for your comments. When the Board of Trustees was asked to approve an interpretation of PRC-005-1 that was written by the PSMT SDT, the board acknowledged the reliability gap identified by the drafting team caused by the definition of "protection system" and directed that work to close this reliability gap should be given “priority.” To close this reliability gap the BOT has directed that revised definition be applied to PRC-005-1 as soon as practical - not years from now. The implementation plan now proposes at least 12 months for entities to apply the new definition to PRC-005-1, and that should give entities time to apply the new definition to PRC-005-1.				
Raj Rana	American Electric Power	3	Negative	The definition as drafted includes "Station dc supply." While this appears reasonable and innocuous, the term is unclear and could be construed by an auditor to include a lot of equipment and infrastructure not intended by the PSMT SDT. For example, station battery chargers are typically supplied by station auxiliary power transformers, which in turn are supplied by primary-voltage bus work, primary-voltage fuses, or primary-voltage circuit breakers.

Voter	Entity	Segment	Vote	Comment
				An auditor for either PRC-005 or any other Standard referencing "Protection System" could read that such primary-voltage equipment is part of the Protection System and therefore subject to certain requirements in either PRC-005 or any other Standard referencing Protection System. The definition as drafted includes "Communications systems necessary. . . ". Once again, this term appears innocuous, but it is actually unclear. For example, if a transfer-trip channel is carried on a microwave path, an auditor may decide that the entire microwave equipment, microwave building battery, and microwave building emergency generator are all part of the Protection System, and thus subject to requirements in either PRC-005 or other existing or future Standards that refer to Protection System. AEP recommends that the term be phrased "communications paths" opposed to "communications systems". Similar to the above two items, we are concerned about the inclusion of voltage and current-sensing "devices" in the Definition. As written, applicability can be inferred to the entire device and not merely its output quantities, not only for this Standard but any other that references a Protection System. AEP recommends the phrase "circuitry from voltage and current-sensing devices providing inputs to protective relays" instead of "voltage and current-sensing devices providing inputs to protective relays"
Response: Thank you for your comments. The definition has been modified to specifically include battery chargers. As to your other comments, it appears that your comments apply more to the application of the definition within PRC-005-1 or PRC-005-2 than they do to the definition itself. Within the reference materials associated with PRC-005-2, the SDT advises that equipment associated with microwave systems is part of the communications system. The SDT believes that the proposed definition is less vague than the current definition on the issues you cite, and would improve the situation that you discuss from the current level.				
Michael Moltane	International Transmission Company Holdings Corp	1	Negative	The definition contained in this ballot really needs to be part and parcel of the PRC-005-2 Standard Ballot, since the definition has such a huge impact on the standard itself. It is problematic to vote on a definition and on the standard independent of one another. Therefore, ITC must vote negative on this Ballot.
Response: Thank you for your comments. When the Board of Trustees was asked to approve an interpretation of PRC-005-1 that was written by the PSMT SDT, the board acknowledged the reliability gap identified by the drafting team caused by the definition of "protection system" and directed that work to close this reliability gap should be given “priority.” To close this reliability gap the BOT has directed that revised definition be applied to PRC-005-1 as soon as practical				

Voter	Entity	Segment	Vote	Comment
- not years from now. The implementation plan now proposes at least 12 months for entities to apply the new definition to PRC-005-1, and that should give entities time to apply the new definition to PRC-005-1.				
Michael Schiavone	Niagara Mohawk (National Grid Company)	3	Affirmative	The definition could be worded better
Response: Thank you for your comments. The SDT has modified the definition for improved clarity.				
Kenneth Parker	Entegra Power Group, LLC	5	Negative	The definition infers testing of CTs and PTs which should not be necessary.
Response: Thank you for your comments. The definition of Protection System is for all applications of this term throughout NERC Standards. The detailed applicability of this element of the definition relative to maintenance within PRC-005-2 is addressed within the standard by specifying, "Verify that acceptable measurements of the current and voltage signals are received by the protective relays".				
Christopher Plante	Integrys Energy Group, Inc.	4	Negative	1. The definition should state what is meant by "station dc supply". There continues to be questions in the industry regarding if dc supply includes the battery charger. We believe the charger is not included in station dc supply and that the Definition of Protection System should specifically address the point. 2. Also, the definition should specify BES relays, BES protection functions and elements associated with BES relays and functions.
Response: Thank you for your comments. 1. The definition has been modified to specifically include battery chargers. 2. This is properly an issue to address in the various standards that use this definition.				
Terry Harbour	MidAmerican Energy Co.	1	Negative	The following changes should be incorporated in the definition to insure it is used consistently in PRC-005 and any other standards where it appears. Revise Protection System definition to: o BES Protective relays which respond to electrical quantities, o Communications systems necessary for correct operation of the BES protective functions, o Voltage and current sensing devices providing inputs to BES protective relays, o Battery and battery chargers that supply dc to BES protective relays, communications, and control circuitry, and Control circuitry associated with the BES

Voter	Entity	Segment	Vote	Comment
				protective functions through the trip coil(s) of the circuit breakers or other interrupting devices.
Response: Thank you for your comments. The station dc supply component type has been modified essentially as you suggest. As to your suggestion regarding inclusion of "BES' within the definition – this is properly an issue to address in the various standards that use this definition.				
Robert W. Roddy	Dairyland Power Coop.	1	Negative	The implementation of the revised definition should not take place until the revised standard PRC-005-2 is in effect.
Response: Thank you for your comments. When the Board of Trustees was asked to approve an interpretation of PRC-005-1 that was written by the PSMT SDT, the board acknowledged the reliability gap identified by the drafting team caused by the definition of "protection system" and directed that work to close this reliability gap should be given "priority." To close this reliability gap the BOT has directed that revised definition be applied to PRC-005-1 as soon as practical - not years from now. The implementation plan now proposes at least 12 months for entities to apply the new definition to PRC-005-1, and that should give entities time to apply the new definition to PRC-005-1.				
John Tolo	Tucson Electric Power Co.	1	Negative	The mention of communication systems maintenance (M1.) needs more clarity as to the depth of the maintenance required. Also, Table 1a, a 3-month interval to verify that the Protection System communications system is functional is too frequent to be practical.
Response: Thank you for your comments. Your comments do not seem relevant to the definition, but instead appear to be related directly to the revisions to the draft PRC-005-2 itself. The SDT had not completed consideration of comments on the standard when the definition was re-posted. The SDT provides the following response, in accordance with the responses to comments on the standard itself.				
Scott Kinney	Avista Corp.	1	Negative	The modified definition of Protection System now refers to "functions" rather than "devices." What are the "functions?" This new term adds confusion without being defined in the standard.
Response: Thank you for your comments. The reference to "functions" is intended to reflect that there is increasing use, particularly in SPS, of devices which mimic protective relays but are not actually traditional relays.				
Michael Gammon	Kansas City Power & Light Co.	1	Negative	The proposed changes in the Standard are far too prescriptive and do not take into account the multitude of manufacturers

Voter	Entity	Segment	Vote	Comment
Charles Locke	Kansas City Power & Light Co.	3	Negative	equipment by establishing broad maintenance cycles and testing intervals.
Scott Heidtbrink	Kansas City Power & Light Co.	5	Negative	
Thomas Saitta	Kansas City Power & Light Co.	6	Negative	
Response: Thank you for your comments. Your comments appear to be relative to the draft standard PRC-005-2, rather than the definition. In Order 693, the FERC directed that NERC establish maximum allowable intervals for maintenance of protection systems.				
Jack Stamper	Clark Public Utilities	1	Negative	The proposed definition does not provide the level of clarity that is needed.
Response: Thank you for your comments. The SDT has modified the definition for improved clarity.				
Ajay Garg	Hydro One Networks, Inc.	1	Affirmative	The proposed definition of Protection System needs clarification on when such equipment is a part of the transmission protection system. Emphasis should be on systems and not individual components.
Response: Thank you for your comments. This issue is better addressed in the various standards that use the definition.				
Mace Hunter	Lakeland Electric	3	Affirmative	The proposed draft may introduce TFEs into the PRC standards, not a good thing. The proposed draft reaches beyond the statutory scope of the reliability standards. Perfection is not a realistic goal.
Response: Thank you for your comments. The SDT has modified the definition for improved clarity.				
Kim Warren	Independent Electricity System Operator	2	Affirmative	The proposed revision to the definition has removed the "associated circuitry from the voltage and current sensing devices" which we believe should be included since failure of this wiring will render the Protection System inoperative. On this basis we recommend the following change to once again include this circuitry in the definition: “Protective relays which respond to electrical quantities, communication systems necessary for correct operation of protective functions, voltage and current sensing devices AND ASSOCIATED CIRCUITRY [emphasis added] providing inputs to protective relays, station dc supply, and control circuitry

Voter	Entity	Segment	Vote	Comment
				associated with protective functions through the trip coil(s) of the circuit breakers or other interrupting devices."
Response: Thank you for your comments. The change to insert the term "devices providing" was to improve clarity while also excluding voltage and current measuring devices that provide data exclusively to metering equipment as opposed to Protection Systems. The SDT agrees with the commenter that an appropriate maintenance activity is to ensure that the measured voltage and current values correctly make it to the relays. The maintenance activity is a part of the standard. The absence of this activity from the definition is not intended to lead one to believe that the activity is not important.				
Roger C Zaklukiewicz		8	Negative	The proposed rewording of the definition implies that the wiring from the current transformers and voltage transformers to the protective relay systems are independent of the protection system being tested and that separate maintenance standards will have to be established to test the integrity of the wiring and the Potential device and current transformer. The definition of the Protection System should not exclude the wiring and devices which generate the current and voltage sources to the protective relays.
Response: Thank you for your comments. The change to insert the term "devices providing" was to improve clarity while also excluding voltage and current measuring devices that provide data exclusively to metering equipment as opposed to Protection Systems. The SDT agrees with the commenter that an appropriate maintenance activity is to ensure that the measured voltage and current values correctly make it to the relays. The maintenance activity is a part of the standard. The absence of this activity from the definition is not intended to lead one to believe that the activity is not important.				
Jim R Stanton	SPS Consulting Group Inc.	8	Negative	The reference to "communication systems" should be deleted from the definition. It is confusing to Registered Entities who do not consider the circuits that connect components of a protection system to be a communication "system" such as a telephone system, postal service or computer network which is more properly called a communication system. Suggest changing it to "signal carrying circuitry."
Response: Thank you for your comments. The SDT believes that "Communication Systems" is a term that is generally well understood within the industry.				

Voter	Entity	Segment	Vote	Comment
Brock Ondayko	AEP Service Corp.	5	Negative	The term "station" should either be defined or removed from the definition, as it implies transmission and distribution assets while the term "plant" is used to define generation assets. It would suffice to simply refer to the "DC Supply". As written, the implementation plan only specifies a time frame for entities to update their documentation for PRC-005-1 and PRC-005-2 compliance. The implementation plan also needs to give entities a time frame to address any required changes to their documentation for other standards that use the term "Protection System", including but not limited to NUC-001-2, PER-005-1, PRC-001-1, etc.
Response: Thank you for your comments. The term 'station' was used because it could include both a substation and a generation station while at the same time excluded installations that were strictly communications repeater sites. As noted on the "Assessment of Impact of Proposed Modification to the Definition of "Protection System" which was posted with the first comment period, the SDT believes that the bulk of the implementation of the new definition will be regarding PRC-005 (generically) and that there will be very little implementation associated with the other standards that utilize this term.				
Paul B. Johnson	American Electric Power	1	Negative	1. The term "station" should either be defined or removed from the definition, as it implies transmission and distribution assets while the term "plant" is used to define generation assets. It would suffice to simply refer to the "DC Supply". As written, the implementation plan only specifies a time frame for entities to update their documentation for PRC-005-1 and PRC-005-2 compliance. The implementation plan also needs to give entities a time frame to address any required changes to their documentation for other standards that use the term "Protection System", including but not limited to NUC-001-2, PER-005-1, PRC-001-1, etc. we still support a "negative" ballot with the following comments: 2. The definition as drafted includes "Station dc supply." While this appears reasonable and innocuous, the term is unclear and could be construed by an auditor to include a lot of equipment and infrastructure not intended by the PSMT SDT. For example, station battery chargers are typically supplied by station auxiliary power transformers, which in turn are supplied by primary-voltage buswork, primary-voltage fuses, or primary-voltage circuit

Voter	Entity	Segment	Vote	Comment
				breakers. An auditor for either PRC-005 or any other Standard referencing "Protection System" could read that such primary-voltage equipment is part of the Protection System and therefore subject to certain requirements in either PRC-005 or any other Standard referencing Protection System. The definition as drafted includes "Communications systems necessary. . . ". Once again, this term appears innocuous, but it is actually unclear. For example, if a transfer-trip channel is carried on a microwave path, an auditor may decide that the entire microwave equipment, microwave building battery, and microwave building emergency generator are all part of the Protection System, and thus subject to requirements in either PRC-005 or other existing or future Standards that refer to Protection System Similar to the above two items, we are concerned about the inclusion of voltage and current-sensing "devices" in the Definition. As written, applicability can be inferred to the entire device and not merely its output quantities, not only for this Standard but any other that references a Protection System.
Response: Thank you for your comments. 1. The term 'station' was used because it could include both a substation and a generation station while at the same time excluded installations that were strictly communications repeater sites. As noted on the "Assessment of Impact of Proposed Modification to the Definition of "Protection System" which was posted with the first comment period, the SDT believes that the bulk of the implementation of the new definition will be regarding PRC-005 (generically) and that there will be very little implementation associated with the other standards that utilize this term. 2. The definition has been modified to specifically include battery chargers. As to your other comments, it appears that your comments apply more to the application of the definition within PRC-005-1 or PRC-005-2 than they do to the definition itself. Within the reference materials associated with PRC-005-2, the SDT advises that equipment associated with microwave systems is part of the communications system. The SDT believes that the proposed definition is less vague than the current definition on the issues you cite, and would improve the situation that you discuss from the current level.				
Peter T Yost	Consolidated Edison Co. of New York	3	Negative	1. There is not enough clarity on whether a Distribution Provider (DP) will be able to clearly identify which protection system components it does own and needs to maintain. Many DPs own and/or operate equipment identified in the existing or proposed definition. However, not all such equipment translates into a transmission Protection System. The definition needs clarification on when such equipment is a part of the transmission protection system.

Voter	Entity	Segment	Vote	Comment
				2. Also, the time provided for the first phase "at least six months" is too open ended and does not provide entities with a clear timeline. It is suggested that one year is appropriate for the first phase phasing out the second year in stages.
Response: Thank you for your comments. 1. Your comments appear to be relative to the draft standard PRC-005-2, rather than the definition. The SDT had not completed the consideration of comments on the standard when the definition was re-posted. The SDT has responded to similar comments within the responses to ballot comments and the consideration of comments on the standard itself. "When such equipment is part of the transmission protection system" is properly a matter to be resolved within the various standards that use this term. 2. The implementation period has been revised from six months to twelve months.				
Greg Lange	Public Utility District No. 2 of Grant County	3	Negative	These systems are not always maintained at the component level. ie. meggering from the relay input test switch through the cable and the CT. This has not closed all the issues around professional judgement (interpretations) that make us nervous when faced with the human element of an audit. We need more specificity to close that gap.
Response: Thank you for your comments. Your comments appear to be relative to the draft standard PRC-005-2, rather than the definition. The SDT had not completed the consideration of comments on the standard when the definition was re-posted. The SDT has responded to similar comments within the responses to ballot comments and the consideration of comments on the standard itself.				
Silvia P Mitchell	Florida Power & Light Co.	6	Affirmative	This revision is better written.
Response: Thank you for your comments.				

Voter	Entity	Segment	Vote	Comment
Joseph G. DePoorter	Madison Gas and Electric Co.	4	Negative	Upon review of the updated proposed "Protection System" definition and its main use in describing PRC-005, which applies to BES Protective Systems, the definition needs to incorporate BES within it. Without BES used within the definition, it will be used to interpret every protection system that the industry uses. This is not the course that we wish to travel. Please note the following recommended definition: o BES Protective relays which respond to electrical quantities, o Communications systems necessary for correct operation of the BES protective functions, o Voltage and current sensing devices providing inputs to BES protective relays, o Battery and battery chargers that supply dc power to BES protective relays, communications, and control circuitry, and o Control circuitry associated with the BES protective functions through the trip coil(s) of the circuit breakers or other interrupting devices.
Response: Thank you for your comments. The station dc supply component type has been modified essentially as you suggest. As to your suggestion regarding inclusion of "BES' within the definition – this is properly an issue to address in the various standards that use this definition.				
Richard J. Mandes	Alabama Power Company	3	Affirmative	We agree that the definition provides clarity and will enhance the reliability of the Protection Systems to which it is applicable. However, we feel that there needs to be a direct linkage of the definition's effective date to the approval and implementation schedule of PRC-005-2. Since this new definition is directly linked to the proposed revised standard, it would be premature to make this definition effective prior to the effective date of the new standard.
Anthony L Wilson	Georgia Power Company	3	Affirmative	
Gwen S Frazier	Gulf Power Company	3	Affirmative	
Don Horsley	Mississippi Power	3	Affirmative	
Horace Stephen Williamson	Southern Company Services, Inc.	1	Affirmative	
Response: Thank you for your comments. When the Board of Trustees was asked to approve an interpretation of PRC-005-1 that was written by the PSMT SDT, the board acknowledged the reliability gap identified by the drafting team caused by the definition of "protection system" and directed that work to close this reliability gap should be given "priority." To close this reliability gap the BOT has directed that revised definition be applied to PRC-005-1 as soon as practical - not years from now. The implementation plan now proposes at least 12 months for entities to apply the new definition to PRC-005-1, and that should give entities time to apply the new definition to PRC-005-1.				
Jason L Marshall	Midwest ISO, Inc.	2	Abstain	We are abstaining because a number of our stakeholders have concerns regarding the definition of Protection System.
Response: Thank you for your comments. The SDT responded to the individual stakeholder comments submitted.				

Voter	Entity	Segment	Vote	Comment
Claudiu Cadar	GDS Associates, Inc.	1	Negative	We do not agree with inclusion of the trip coil. The trip coil is not a protective device; it does not sense voltage or current and operates based on a faulted condition. It is supplied the necessary input from the DC system which is based on protective relays signaling and contact operation. The trip coil is part of the circuit breaker; it is not separate equipment. Does this mean that the circuit breaker is now part of the protection system?
Response: Thank you for your comments. The current definition includes "DC Control Circuitry"; the SDT attempted to clearly define which of the many control circuits and the limit of the definition. While the current definition is vague, it can certainly include the trip coils and close coils and alarm circuits of the interrupting device. The SDT believes that the electrically-operated trip coils are an important part of the control circuitry.				
Anthony Jankowski	Wisconsin Energy Corp.	4	Negative	We Energies does not agree to the implementation plan proposed. While it makes common sense to proceed with R1 prior to proceeding with implementing R2, R3, and R4, the timeline to be compliant for R1 is too short. It will take a considerable amount of resources to migrate the maintenance plan from today's standard to the new standard in phase one. ATC recommends that time to develop and update the revised program be increased to at least one year followed by a transition time for the entity to collect all the necessary field data for the protection system within its first full cycle of testing. (In ATC's case would be 6 years) To address phase two, We Energies believes human and technological resources will be overburdened to implement this revised standard as written. The transition to implementing the new program will take another full testing cycle once the program has been updated. Increased documentation and obtaining additional resources to accomplish this will be challenging. Implementation of PRC-005-2 will impact We Energies in the following manner: a. Increase costs: double existing maintenance costs. b. Since there will be a doubling of human interaction (or more), it is expected that failures due to human error will increase, possibly proportionately. c. Breaker maintenance may need to be aligned with protection scheme testing, which will always contain elements that are include in the non-monitored table for 6 yr testing. d. We Energies is developing standards for redundant bus and transformer protection schemes. This would allow We Energies to

Voter	Entity	Segment	Vote	Comment
				test the protection packages without taking the equipment out of service. Further if one system fails, there is full redundancy available. With the current version of PRC-005-2, We Energies would need to take an outage to test the protection schemes for a transformer or a bus, there is not an incentive to install redundant schemes. We Energies is working with a condition based breaker maintenance program. This program's value would be greatly diminished under PRC-005-2 as currently written. Consideration also needs to be given for other NERC standards expected to be passed and in the implementation stage at the same time, such as the CIP standards.
Response: Thank you for your comments. Your comments appear to be relative to the draft standard PRC-005-2, rather than the definition. The SDT had not completed the consideration of comments on the standard when the definition was re-posted. The SDT has responded to similar comments within the responses to ballot comments and the consideration of comments on the standard itself.				
Linda Horn	Wisconsin Electric Power Co.	5	Negative	We object strongly to the addition of the term "voltage and current sensing devices...". This revised definition will make it a requirement to perform actual tests on the voltage and current transformers. The previous definition was "voltage and current inputs to protective relays" and this is much preferred to allow the needed flexibility in maintenance practices.
James R. Keller	Wisconsin Electric Power Marketing	3	Negative	
Response: Thank you for your comments. The current definition of Protection System uses the term "voltage and current sensing devices". The current standard PRC-005-1 requires the entity to have a PSMP for those devices. The proposed revision PRC-005-2 would require minimum maintenance activities that verify other than an annual IR Scan of the voltage and current sensing devices. As there is no method listed in the standard, some of the process flexibility that you seek has been maintained.				
Brandy A Dunn	Western Area Power Administration	1	Affirmative	Western agrees with the revised definition of a Protection System and disagreese with the Implementation Plan under PRC-005-1. The definition implementation should be delayed until approval of PRC-005-2.
Response: Thank you for your comments. When the Board of Trustees was asked to approve an interpretation of PRC-005-1 that was written by the PSMT SDT, the board acknowledged the reliability gap identified by the drafting team caused by the definition of "protection system" and directed that work to close this reliability gap should be given "priority." To close this reliability gap the BOT has directed that revised definition be applied to PRC-005-1 as soon as practical - not years from now. The implementation plan now proposes at least 12 months for entities to apply the new definition to PRC-005-1, and that should give				

Voter	Entity	Segment	Vote	Comment
entities time to apply the new definition to PRC-005-1.				
Henry Delk, Jr.	SCE&G	1	Negative	While SCE&G believes the majority of the PRC-005-2 standard is ready to be affirmed there are still inconsistencies with areas of the standard that need to be corrected prior to approval. These inconsistencies are addressed in SCE&G's comments which have been submitted for the current draft of this standard.
Response: Thank you for your comments. Your comments appear to be relative to the draft standard PRC-005-2, rather than the definition. The SDT had not completed the consideration of comments on the standard when the definition was re-posted. Please see the response to your comments on the first draft of the standard.				
Richard J Kafka	Potomac Electric Power Co.	1	Affirmative	While voting in the affirmative, PHI feels the definition could be improved by adding and associated circuitry to the third item Voltage and current sensing devices and associated circuitry providing inputs to protective relays
Response: Thank you for your comments. The SDT agrees with the commenter of the importance of this as a maintenance activity and has attempted to capture relevant maintenance activities within the revised standard itself.				
David A. Lapinski	Consumers Energy	3	Negative	Without the context of draft PRC-005-2, the changes to this definition are difficult to understand and even more difficult to implement. We therefore strongly recommend that this definition NOT be approved independently from the draft of PRC-005-2, and that development of both the definition and the standard proceed as a single activity.
David Frank Ronk	Consumers Energy	4	Negative	
Response: Thank you for your comments. When the Board of Trustees was asked to approve an interpretation of PRC-005-1 that was written by the PSMT SDT, the board acknowledged the reliability gap identified by the drafting team caused by the definition of "protection system" and directed that work to close this reliability gap should be given "priority." To close this reliability gap the BOT has directed that revised definition be applied to PRC-005-1 as soon as practical - not years from now. The implementation plan now proposes at least 12 months for entities to apply the new definition to PRC-005-1, and that should give entities time to apply the new definition to PRC-005-1.				
Gregory L Pieper	Xcel Energy, Inc.	1	Negative	Xcel Energy believes the standard still contains many aspects that are not clearly understood by entities, including what is needed to demonstrate a compliant PSMP. Comments have been submitted concurrently to NERC via the draft comment response form.
Michael Ibold	Xcel Energy, Inc.	3	Negative	
Response: Thank you for your comments. Your comments appear to be relative to the draft standard PRC-005-2, rather than the definition. The SDT had not completed the consideration of comments on the standard when the definition was re-posted. Please see the response to your comments on the first draft of				

Voter	Entity	Segment	Vote	Comment
the standard.				
James A Ziebarth	Y-W Electric Association, Inc.	4	Affirmative	Y-WEA thanks the SDT for clarifying what relays are and are not included in this definition.
Response: Thank you for your comments.				

Proposed Definition of Protection System:

Protection System –

- Protective relays which respond to electrical quantities,
- Communications systems necessary for correct operation of protective functions,
- Voltage and current sensing devices providing inputs to protective relays,
- Station dc supply associated with protective functions (including station batteries, battery chargers, and non-battery-based dc supply), and
- Control circuitry associated with protective functions through the trip coil(s) of the circuit breakers or other interrupting devices.

Protection System Definition

The definition posted for the second ballot of Protection System reads as follows:

Protection System –

- Protective relays which respond to electrical quantities,
- Communications systems necessary for correct operation of protective functions,
- Voltage and current sensing devices providing inputs to protective relays,
- Station dc supply, and
- Control circuitry associated with protective functions through the trip coil(s) of the circuit breakers or other interrupting devices.

Based on stakeholder comments submitted with the second ballot, the drafting team made minor changes to the proposed definition as shown below:

Protection System –

- Protective relays which respond to electrical quantities,
- Communications systems necessary for correct operation of protective functions,
- Voltage and current sensing devices providing inputs to protective relays,
- Station dc supply associated with protective functions (including station batteries, battery chargers, and non-battery-based dc supply), and
- Control circuitry associated with protective functions through the trip coil(s) of the circuit breakers or other interrupting devices.

Protection System Definition

The previously approved (Board of Trustees) definition of Protection System reads as follows:

Protection System: Protective relays, associated communication systems, voltage and current sensing devices, station batteries and DC control circuitry.

Proposed Changes to Board of Trustees Approved Version of Definition:

Protection System: Protective relays which respond to electrical quantities, ~~associated~~ communication systems necessary for correct operation of protective functions, voltage and current sensing devices providing inputs to protective relays, station dc supply associated with protective functions (including station batteries, battery chargers, and non-battery based ~~and DC~~ dc supply), and control circuitry associated with protective functions through the trip coil(s) of the circuit breakers or other interrupting devices.

Implementation Plan for the Revised Definition of Protection System

Prerequisite Approvals or Activities:

The implementation of the revised definition is not dependent upon any other activity.

Recommended Modifications to Already Approved Standards

The non-capitalized version of the term, "protection system" is used in the following approved standards:

- NUC-001-2 – Nuclear Plant Interface Coordination
- PER-005-1 – System Personnel Training
- PRC-001-1 – System Protection Coordination

The term, "protection system" shall be capitalized where used in these standards when the definition of "Protection System" is approved by applicable regulatory authorities.

Proposed Effective Date:

Each responsible entity (Distribution Provider that owns a transmission Protection System, Transmission Owner, and Generator Owner) shall modify its protection system maintenance and testing program description and basis document(s) (required in Requirement R1 of PRC-005-1 – Transmission and Generation Protection System Maintenance and Testing) as necessary to reflect the modified definition of 'Protection System' by the first day of the first calendar quarter twelve months following regulatory approvals and implement any additional maintenance and testing (required in Requirement R2 of PRC-005-1 – Transmission and Generation Protection System Maintenance and Testing) by the end of the first complete maintenance and testing cycle described in the entity's program description and basis document(s) following establishment of the program changes resulting from the revised definition.

The original definition of "Protection System" shall be retired at the same time the revised definition becomes effective.

NERC
NORTH AMERICAN ELECTRIC RELIABILITY CORPORATION

Comment Form for the definition of Protection System [Project 2007-17]

Please **DO NOT** use this form to submit comments on the proposed definition of "Protection System." Comments must be submitted by **October 12, 2010**. If you have questions please contact Al McMeekin at al.mcmeekin@nerc.net or by telephone at 803-530-1963.

Background Information:

A second ballot for the definition of "Protection System" was conducted from July 23 – August 2, 2010. There were numerous comments opposing balloting the definition separately from the definition; the NERC Board of Trustees directed that a revised definition be approved as quickly as possible to close a reliability gap.

Some commenters suggested the "station dc supply" portion of the definition be modified to specifically address battery chargers; the SDT modified the definition as suggested. The revised definition is shown below with the new language shown in red:

Protection System –

- Protective relays which respond to electrical quantities,
- Communications systems necessary for correct operation of protective functions,
- Voltage and current sensing devices providing inputs to protective relays,
- Station dc supply associated with protective functions (including station batteries, battery chargers, and non-battery-based dc supply), and
- Control circuitry associated with protective functions through the trip coil(s) of the circuit breakers or other interrupting devices.

The SDT did not make any other modifications to the definition and did not make any modifications to the implementation plan following the second ballot. The implementation plan allows at least 12 months beyond the regulatory approval date for entities to implement the new definition.

1. Do you agree with the proposed definition of "Protection System?" If not, please provide specific suggestions for improvement.

   ☐ Yes

   ☐ No

   Comments:

Standards Announcement

Successive Ballot Open
October 2-14, 2010

Available at: https://standards.nerc.net/CurrentBallots.aspx

Project 2007-17 Protection System Maintenance Definition

A successive ballot for the definition of "Protection System" is now open through **8 p.m. Eastern on October 14, 2010**.

Instructions

Members of the ballot pool associated with this project may log in and submit their votes from the following page: https://standards.nerc.net/CurrentBallots.aspx

The Standards Committee encourages all members of the ballot pool to review the consideration of comments for the previous ballot and the modifications that team made to the definition. In a successive ballot, votes are not carried forward from the previous ballot.

Transition from Reliability Standards Development Procedure Version 7 – to Standard Processes Manual

Under the Reliability Standards Development Procedure Version 7, consensus was built with successive formal comment periods, followed by a 30-day pre-ballot review, followed by an initial ballot, and then a recirculation ballot. The intent was to use stakeholder views submitted through the formal comment periods to achieve consensus, and then to confirm that consensus during the balloting. This process did not allow a drafting team to make any changes to a standard (or definition) between ballots, which incented teams to avoid making improvements once a standard (or definition) had gone through an initial ballot. If a team made a change between ballots, then the standard (or definition) was required to be posted for a new comment period and then another pre-ballot review and another initial ballot, and finally if there were no more changes made to the standard (or definition), a recirculation ballot was conducted to confirm consensus.

Under the new Standard Processes Manual, consensus is achieved through parallel comment and ballot periods. Successive comment and ballot periods are conducted until there is consensus – and then a recirculation ballot is conducted to confirm that consensus. There is no 30-day pre-ballot review period, and drafting teams are encouraged to make revisions to the standard between successive ballots to improve the quality of the standard (or definition).

Next Steps

Voting results will be posted and announced after the ballot window closes.

Project Background

When the Board of Trustees was asked to approve an interpretation of PRC-005-1 that was written by the Protection System and Maintenance Standard Drafting Team, the board acknowledged the reliability gap identified by the drafting team caused by the definition of "protection system" and directed that work to close this reliability gap should be given "priority." The Standards Committee directed the team to advance the definition of Protection System in parallel with the development of PRC-005-2.

Project page: http://www.nerc.com/filez/standards/Protection_System_Maintenance_Project_2007-17.html

Standards Process

The Standard Processes Manual contains all the procedures governing the standards development process. The success of the NERC standards development process depends on stakeholder participation. We extend our thanks to all those who participate.

For more information or assistance, please contact Monica Benson, Standards Process Administrator, at monica.benson@nerc.net or at 609.452.8060.

North American Electric Reliability Corporation
116-390 Village Blvd.
Princeton, NJ 08540
609.452.8060 | www.nerc.com

NERC
NORTH AMERICAN ELECTRIC RELIABILITY CORPORATION

Standards Announcement

Successive Formal Comment Period Open
September 13 – October 12, 2010

Now available at:
http://www.nerc.com/filez/standards/Protection_System_Maintenance_Project_2007-17.html

Project 2007-17: Protection System Maintenance and Testing

A formal comment period for the revised definition of "Protection System" is now open **until 8 p.m. Eastern on October 12, 2010.**

This is the fourth draft of the proposed definition. As envisioned, the definition, once approved, will apply to PRC-005-1 approximately twelve months following regulatory approval. The new definition will replace the existing definition of "protection system." The existing definition has some identified deficiencies that result in a reliability gap, where some protection system owners do not consider components such as battery chargers associated with protective functions as components of a protection system, and do not include the maintenance of these components in their protection system maintenance programs.

Transition from Reliability Standards Development Procedure Version 7 – to Standard Processes Manual

Under the Reliability Standards Development Procedure Version 7, consensus was built with successive formal comment periods, followed by a 30-day pre-ballot review, followed by an initial ballot, and then a recirculation ballot. The intent was to use stakeholder views submitted through the formal comment periods to achieve consensus, and then to confirm that consensus during the balloting. This process did not allow a drafting team to make any changes to a standard (or definition) between ballots, which incented teams to avoid making improvements once a standard (or definition) had gone through an initial ballot. If a team made a change between ballots, then the standard (or definition) was required to be posted for a new comment period and then another pre-ballot review and another initial ballot, and finally if there were no more changes made to the standard (or definition), a recirculation ballot was conducted to confirm consensus.

Under the new Standard Processes Manual, consensus is achieved through parallel comment and ballot periods. Successive comment and ballot periods are conducted until there is consensus – and then a recirculation ballot is conducted to confirm that consensus. There is no 30-day pre-ballot review period, and drafting teams are encouraged to make revisions to the standard between successive ballots to improve the quality of the standard (or definition).

Instructions

Please use this electronic form to submit comments. If you experience any difficulties in using the electronic form, please contact Monica Benson at monica.benson@nerc.net. An off-line, unofficial copy of the comment form is posted on the project page:

http://www.nerc.com/filez/standards/Protection_System_Maintenance_Project_2007-17.html

Next Steps

During the last 10 days of the 30-day formal comment period a successive ballot will be conducted for 10 days. All members of the ballot pool must cast a new ballot – the votes and comments from the last ballot will not be carried over. The drafting team will consider all comments (those submitted with a comment form, and those submitted with a ballot) and will determine whether to make additional changes to the definition. The team will post its response to comments and, if the definition has only minor changes, will post the definition and conduct a 10-day recirculation ballot.

Project Background

When the Board of Trustees was asked to approve an interpretation of PRC-005-1 that was written by the Protection System and Maintenance Standard Drafting Team, the board acknowledged the reliability gap identified by the drafting team caused by the definition of "protection system" and directed that work to close this reliability gap should be given "priority." The Standards Committee directed the team to advance the definition of Protection System in parallel with the development of PRC-005-2.
Project page: http://www.nerc.com/filez/standards/Protection_System_Maintenance_Project_2007-17.html

Standards Process

The Standard Processes Manual contains all the procedures governing the standards development process. The success of the NERC standards development process depends on stakeholder participation. We extend our thanks to all those who participate.

For more information or assistance, please contact Monica Benson,
Standards Process Administrator, at monica.benson@nerc.net or at 609.452.8060.

North American Electric Reliability Corporation
116-390 Village Blvd.
Princeton, NJ 08540
609.452.8060 | www.nerc.com

NERC
NORTH AMERICAN ELECTRIC RELIABILITY CORPORATION

Standards Announcement
Successive Ballot Results

Now available at: https://standards.nerc.net/Ballots.aspx

Project 2007-17 Protection System Maintenance Definition
A successive ballot for the definition of "Protection System" ended **on October 14, 2010**.

Successive Ballot Results
Voting statistics are listed below, and the Ballot Results Web page provides a link to the detailed results:

Quorum: 84.11%

Approval: 84.52 %

Since at least one negative ballot included a comment, these results are not final. Another ballot (either a successive ballot or a recirculation ballot) must be conducted.

Transition from Reliability Standards Development Procedure Version 7 – to Standard Processes Manual
Under the Reliability Standards Development Procedure Version 7, consensus was built with successive formal comment periods, followed by a 30-day pre-ballot review, followed by an initial ballot, and then a recirculation ballot. The intent was to use stakeholder views submitted through the formal comment periods to achieve consensus, and then to confirm that consensus during the balloting. This process did not allow a drafting team to make any changes to a standard (or definition) between ballots, which incented teams to avoid making improvements once a standard (or definition) had gone through an initial ballot. If a team made a change between ballots, then the standard (or definition) was required to be posted for a new comment period and then another pre-ballot review and another initial ballot, and finally if there were no more changes made to the standard (or definition), a recirculation ballot was conducted to confirm consensus.

Under the new Standard Processes Manual, consensus is achieved through parallel comment and ballot periods. Successive comment and ballot periods are conducted until there is consensus – and then a recirculation ballot is conducted to confirm that consensus. There is no 30-day pre-ballot review period, and drafting teams are encouraged to make revisions to the standard between successive ballots to improve the quality of the standard (or definition).

Next Steps
The drafting team will review the comments submitted with ballots and post its consideration of those comments.

Project Background

When the Board of Trustees was asked to approve an interpretation of PRC-005-1 that was written by the Protection System and Maintenance Standard Drafting Team, the board acknowledged the reliability gap identified by the drafting team caused by the definition of "protection system" and directed that work to close this reliability gap should be given “priority.” The Standards Committee directed the team to advance the definition of Protection System in parallel with the development of PRC-005-2.

Project Page: http://www.nerc.com/filez/standards/Protection_System_Maintenance_Project_2007-17.html

Ballot Criteria

Approval requires both a (1) quorum, which is established by at least 75% of the members of the ballot pool submitting either an affirmative vote, a negative vote, or an abstention, and (2) a two-thirds majority of the weighted segment votes cast must be affirmative; the number of votes cast is the sum of affirmative and negative votes, excluding abstentions and non-responses. If there are no negative votes with reasons from the first (or successive) ballot, the results of that ballot shall stand. If, however, one or more members submit negative votes with reasons, another ballot shall be conducted. If the team makes significant changes to the definition, then another successive ballot must be conducted. If the team does not make any significant changes to the definition, then a final recirculation ballot is conducted.

Standards Process

The Standard Processes Manual contains all the procedures governing the standards development process. The success of the NERC standards development process depends on stakeholder participation. We extend our thanks to all those who participate.

For more information or assistance, please contact Monica Benson at monica.benson@nerc.net.

User Name

Password

Log in

Register

-Ballot Pools
-Current Ballots
-Ballot Results
-Registered Ballot Body
-Proxy Voters

Home Page

Ballot Results

Ballot Name:	Project 2007-17 Protection System Maintenance (Protection System definition)_in
Ballot Period:	10/2/2010 - 10/14/2010
Ballot Type:	Initial
Total # Votes:	270
Total Ballot Pool:	321
Quorum:	**84.11 % The Quorum has been reached**
Weighted Segment Vote:	84.52 %
Ballot Results:	**The standard will proceed to recirculation ballot.**

Summary of Ballot Results

Segment	Ballot Pool	Segment Weight	Affirmative # Votes	Affirmative Fraction	Negative # Votes	Negative Fraction	Abstain # Votes	No Vote
1 - Segment 1.	89	1	60	0.833	12	0.167	4	13
2 - Segment 2.	9	0.5	3	0.3	2	0.2	1	3
3 - Segment 3.	71	1	53	0.93	4	0.07	2	12
4 - Segment 4.	24	1	17	0.895	2	0.105	2	3
5 - Segment 5.	67	1	38	0.745	13	0.255	6	10
6 - Segment 6.	37	1	26	0.867	4	0.133	1	6
7 - Segment 7.	0	0	0	0	0	0	0	0
8 - Segment 8.	11	0.8	6	0.6	2	0.2	1	2
9 - Segment 9.	6	0.5	5	0.5	0	0	0	1
10 - Segment 10.	7	0.5	5	0.5	0	0	1	1
Totals	**321**	**7.3**	**213**	**6.17**	**39**	**1.13**	**18**	**51**

Individual Ballot Pool Results

Segment	Organization	Member	Ballot	Comments
1	Allegheny Power	Rodney Phillips	Affirmative	
1	Ameren Services	Kirit S. Shah	Affirmative	
1	American Electric Power	Paul B. Johnson	Negative	View
1	American Transmission Company, LLC	Jason Shaver	Affirmative	View
1	Arizona Public Service Co.	Robert D Smith	Affirmative	
1	Associated Electric Cooperative, Inc.	John Bussman	Affirmative	
1	Avista Corp.	Scott Kinney		

1	Baltimore Gas & Electric Company	John J. Moraski	Negative	View
1	BC Transmission Corporation	Gordon Rawlings	Affirmative	
1	Beaches Energy Services	Joseph S. Stonecipher	Affirmative	
1	Black Hills Corp	Eric Egge		
1	Bonneville Power Administration	Donald S. Watkins	Affirmative	
1	CenterPoint Energy	Paul Rocha	Negative	
1	Central Maine Power Company	Brian Conroy	Affirmative	
1	City of Vero Beach	Randall McCamish	Affirmative	
1	City Utilities of Springfield, Missouri	Jeff Knottek	Affirmative	
1	Clark Public Utilities	Jack Stamper		
1	Cleco Power LLC	Danny McDaniel	Affirmative	
1	Colorado Springs Utilities	Paul Morland	Negative	View
1	Commonwealth Edison Co.	Daniel Brotzman	Affirmative	
1	Consolidated Edison Co. of New York	Christopher L de Graffenried	Affirmative	
1	Dairyland Power Coop.	Robert W. Roddy	Negative	
1	Dayton Power & Light Co.	Hertzel Shamash	Affirmative	
1	Deseret Power	James Tucker	Affirmative	
1	Dominion Virginia Power	John K Loftis	Affirmative	
1	Duke Energy Carolina	Douglas E. Hils	Affirmative	
1	East Kentucky Power Coop.	George S. Carruba	Affirmative	
1	Empire District Electric Co.	Ralph Frederick Meyer	Affirmative	
1	Entergy Corporation	George R. Bartlett	Affirmative	
1	FirstEnergy Energy Delivery	Robert Martinko	Affirmative	View
1	Florida Keys Electric Cooperative Assoc.	Dennis Minton	Affirmative	
1	Gainesville Regional Utilities	Luther E. Fair	Affirmative	
1	GDS Associates, Inc.	Claudiu Cadar		
1	Georgia Transmission Corporation	Harold Taylor, II		
1	Great River Energy	Gordon Pietsch		
1	Hydro One Networks, Inc.	Ajay Garg	Affirmative	
1	Idaho Power Company	Ronald D. Schellberg	Affirmative	
1	International Transmission Company Holdings Corp	Michael Moltane		
1	Kansas City Power & Light Co.	Michael Gammon		
1	Keys Energy Services	Stan T. Rzad	Affirmative	
1	Lake Worth Utilities	Walt Gill	Affirmative	
1	Lakeland Electric	Larry E Watt	Affirmative	
1	Lincoln Electric System	Doug Bantam	Affirmative	
1	Long Island Power Authority	Robert Ganley	Affirmative	
1	Lower Colorado River Authority	Martyn Turner	Affirmative	
1	Manitoba Hydro	Michelle Rheault	Affirmative	
1	Metropolitan Water District of Southern California	Ernest Hahn	Abstain	
1	MidAmerican Energy Co.	Terry Harbour	Negative	View
1	Minnesota Power, Inc.	Randi Woodward	Affirmative	
1	National Grid	Saurabh Saksena	Affirmative	
1	Nebraska Public Power District	Richard L. Koch	Affirmative	View
1	New York Power Authority	Arnold J. Schuff		
1	Northeast Utilities	David H. Boguslawski	Affirmative	
1	NorthWestern Energy	John Canavan	Affirmative	
1	Ohio Valley Electric Corp.	Robert Mattey	Negative	
1	Oklahoma Gas and Electric Co.	Marvin E VanBebber	Abstain	
1	Omaha Public Power District	Douglas G Peterchuck	Negative	
1	Orlando Utilities Commission	Brad Chase	Affirmative	
1	Otter Tail Power Company	Lawrence R. Larson		
1	Pacific Gas and Electric Company	Chifong L. Thomas	Negative	View
1	PacifiCorp	Mark Sampson		
1	PECO Energy	Ronald Schloendorn	Affirmative	
1	Platte River Power Authority	John C. Collins	Affirmative	
1	Potomac Electric Power Co.	Richard J Kafka	Affirmative	
1	PowerSouth Energy Cooperative	Larry D. Avery	Negative	
1	PPL Electric Utilities Corp.	Brenda L Truhe	Affirmative	
1	Public Service Company of New Mexico	Laurie Williams	Abstain	
1	Public Service Electric and Gas Co.	Kenneth D. Brown	Affirmative	
1	Public Utility District No. 1 of Chelan County	Chad Bowman	Affirmative	
1	Puget Sound Energy, Inc.	Catherine Koch	Affirmative	
1	Sacramento Municipal Utility District	Tim Kelley	Affirmative	
1	Salt River Project	Robert Kondziolka	Affirmative	

1	Santee Cooper	Terry L. Blackwell	Affirmative	
1	SCE&G	Henry Delk, Jr.	Affirmative	
1	Seattle City Light	Pawel Krupa	Affirmative	View
1	South Texas Electric Cooperative	Richard McLeon	Affirmative	
1	Southern California Edison Co.	Dana Cabbell	Affirmative	
1	Southern Company Services, Inc.	Horace Stephen Williamson	Affirmative	
1	Southern Illinois Power Coop.	William G. Hutchison		
1	Southwest Transmission Cooperative, Inc.	James L. Jones	Abstain	
1	Southwestern Power Administration	Gary W Cox	Affirmative	
1	Sunflower Electric Power Corporation	Noman Lee Williams	Affirmative	
1	Tennessee Valley Authority	Larry Akens	Affirmative	
1	Tri-State G & T Association, Inc.	Keith V. Carman	Negative	View
1	Tucson Electric Power Co.	John Tolo		
1	United Illuminating Co.	Jonathan Appelbaum	Affirmative	
1	Westar Energy	Allen Klassen	Affirmative	
1	Western Area Power Administration	Brandy A Dunn	Negative	View
1	Xcel Energy, Inc.	Gregory L Pieper	Affirmative	
2	Alberta Electric System Operator	Mark B Thompson	Affirmative	
2	BC Transmission Corporation	Faramarz Amjadi		
2	Electric Reliability Council of Texas, Inc.	Chuck B Manning	Abstain	
2	Independent Electricity System Operator	Kim Warren	Affirmative	
2	ISO New England, Inc.	Kathleen Goodman	Negative	
2	Midwest ISO, Inc.	Jason L Marshall	Negative	View
2	New York Independent System Operator	Gregory Campoli		
2	PJM Interconnection, L.L.C.	Tom Bowe		
2	Southwest Power Pool	Charles H Yeung	Affirmative	
3	Alabama Power Company	Richard J. Mandes	Affirmative	
3	Allegheny Power	Bob Reeping	Affirmative	
3	Ameren Services	Mark Peters	Affirmative	
3	American Electric Power	Raj Rana		
3	Arizona Public Service Co.	Thomas R. Glock		
3	Atlantic City Electric Company	James V. Petrella	Affirmative	
3	BC Hydro and Power Authority	Pat G. Harrington	Affirmative	
3	Bonneville Power Administration	Rebecca Berdahl	Affirmative	
3	Central Lincoln PUD	Steve Alexanderson	Affirmative	
3	City of Bartow, Florida	Matt Culverhouse	Affirmative	
3	City of Clewiston	Lynne Mila	Affirmative	
3	City of Farmington	Linda R. Jacobson	Abstain	
3	City of Green Cove Springs	Gregg R Griffin	Affirmative	
3	City of Leesburg	Phil Janik	Affirmative	
3	ComEd	Bruce Krawczyk	Affirmative	
3	Consolidated Edison Co. of New York	Peter T Yost	Affirmative	
3	Consumers Energy	David A. Lapinski	Negative	View
3	Cowlitz County PUD	Russell A Noble	Affirmative	
3	Delmarva Power & Light Co.	Michael R. Mayer	Affirmative	
3	Detroit Edison Company	Kent Kujala		
3	Dominion Resources Services	Michael F Gildea	Affirmative	
3	Duke Energy Carolina	Henry Ernst-Jr		
3	East Kentucky Power Coop.	Sally Witt	Affirmative	
3	Entergy	Joel T Plessinger	Affirmative	
3	FirstEnergy Solutions	Kevin Querry	Affirmative	View
3	Florida Power Corporation	Lee Schuster	Affirmative	
3	Gainesville Regional Utilities	Kenneth Simmons	Affirmative	
3	Georgia Power Company	Anthony L Wilson	Affirmative	
3	Georgia System Operations Corporation	R Scott S. Barfield-McGinnis	Affirmative	
3	Great River Energy	Sam Kokkinen		
3	Gulf Power Company	Gwen S Frazier	Affirmative	
3	Hydro One Networks, Inc.	Michael D. Penstone	Affirmative	
3	JEA	Garry Baker		
3	Kansas City Power & Light Co.	Charles Locke		
3	Kissimmee Utility Authority	Gregory David Woessner	Affirmative	
3	Lakeland Electric	Mace Hunter	Affirmative	
3	Lincoln Electric System	Bruce Merrill	Affirmative	
3	Los Angeles Department of Water & Power	Kenneth Silver		
3	Louisville Gas and Electric Co.	Charles A. Freibert	Affirmative	
3	Manitoba Hydro	Greg C Parent	Affirmative	
3	MEAG Power	Steven Grego	Affirmative	

3	MidAmerican Energy Co.	Thomas C. Mielnik	Negative	View
3	Mississippi Power	Don Horsley	Affirmative	
3	Municipal Electric Authority of Georgia	Steven M. Jackson	Affirmative	
3	Muscatine Power & Water	John S Bos	Affirmative	
3	New York Power Authority	Marilyn Brown		
3	Niagara Mohawk (National Grid Company)	Michael Schiavone	Affirmative	
3	Northern Indiana Public Service Co.	William SeDoris	Affirmative	
3	Ocala Electric Utility	David T. Anderson	Affirmative	
3	Orlando Utilities Commission	Ballard Keith Mutters	Abstain	
3	PacifiCorp	John Apperson	Affirmative	
3	PECO Energy an Exelon Co.	Vincent J. Catania	Affirmative	
3	Platte River Power Authority	Terry L Baker	Affirmative	
3	Potomac Electric Power Co.	Robert Reuter	Affirmative	
3	Progress Energy Carolinas	Sam Waters	Affirmative	
3	Public Service Electric and Gas Co.	Jeffrey Mueller	Affirmative	
3	Public Utility District No. 1 of Chelan County	Kenneth R. Johnson	Affirmative	
3	Public Utility District No. 2 of Grant County	Greg Lange		
3	Sacramento Municipal Utility District	James Leigh-Kendall	Affirmative	
3	Salem Electric	Anthony Schacher	Affirmative	
3	Salt River Project	John T. Underhill	Affirmative	
3	San Diego Gas & Electric	Scott Peterson	Affirmative	View
3	Santee Cooper	Zack Dusenbury	Affirmative	
3	Seattle City Light	Dana Wheelock	Affirmative	View
3	Southern California Edison Co.	David Schiada	Affirmative	
3	Springfield Utility Board	Jeff Nelson	Affirmative	
3	Tampa Electric Co.	Ronald L Donahey		
3	Tri-State G & T Association, Inc.	Janelle Marriott	Negative	View
3	Wisconsin Electric Power Marketing	James R. Keller	Negative	View
3	Wisconsin Public Service Corp.	Gregory J Le Grave		
3	Xcel Energy, Inc.	Michael Ibold	Affirmative	
4	Alliant Energy Corp. Services, Inc.	Kenneth Goldsmith	Abstain	
4	American Municipal Power - Ohio	Kevin Koloini		
4	American Public Power Association	Allen Mosher	Abstain	
4	City of Clewiston	Kevin McCarthy	Affirmative	
4	City of New Smyrna Beach Utilities Commission	Timothy Beyrle	Affirmative	
4	Consumers Energy	David Frank Ronk	Negative	View
4	Cowlitz County PUD	Rick Syring	Affirmative	
4	Detroit Edison Company	Daniel Herring	Affirmative	
4	Florida Municipal Power Agency	Frank Gaffney	Affirmative	
4	Fort Pierce Utilities Authority	Thomas W. Richards	Affirmative	
4	Georgia System Operations Corporation	Guy Andrews	Affirmative	
4	Illinois Municipal Electric Agency	Bob C. Thomas	Affirmative	
4	Integrys Energy Group, Inc.	Christopher Plante	Affirmative	
4	Madison Gas and Electric Co.	Joseph G. DePoorter	Affirmative	View
4	Ohio Edison Company	Douglas Hohlbaugh	Affirmative	View
4	Old Dominion Electric Coop.	Mark Ringhausen	Affirmative	
4	Public Utility District No. 1 of Douglas County	Henry E. LuBean	Affirmative	
4	Public Utility District No. 1 of Snohomish County	John D. Martinsen	Affirmative	
4	Sacramento Municipal Utility District	Mike Ramirez	Affirmative	
4	Seattle City Light	Hao Li	Affirmative	View
4	Seminole Electric Cooperative, Inc.	Steven R Wallace		
4	South Mississippi Electric Power Association	Steve McElhaney		
4	Wisconsin Energy Corp.	Anthony Jankowski	Negative	View
4	Y-W Electric Association, Inc.	James A Ziebarth	Affirmative	
5	AEP Service Corp.	Brock Ondayko	Negative	View
5	Amerenue	Sam Dwyer	Affirmative	
5	APS	Mel Jensen		
5	Avista Corp.	Edward F. Groce	Abstain	
5	Black Hills Corp	George Tatar	Abstain	
5	Bonneville Power Administration	Francis J. Halpin	Affirmative	
5	Chelan County Public Utility District #1	John Yale	Affirmative	
5	City of Grand Island	Jeff Mead	Affirmative	
5	City of Tallahassee	Alan Gale	Abstain	
5	City Water, Light & Power of Springfield	Karl E. Kohlrus	Affirmative	
5	Consolidated Edison Co. of New York	Wilket (Jack) Ng	Affirmative	

5	Constellation Power Source Generation, Inc.	Amir Y Hammad	Negative	View
5	Consumers Energy	James B Lewis	Negative	View
5	Cowlitz County PUD	Bob Essex	Affirmative	
5	Dominion Resources, Inc.	Mike Garton	Affirmative	
5	Duke Energy	Robert Smith	Affirmative	
5	Dynegy Inc.	Dan Roethemeyer	Affirmative	View
5	East Kentucky Power Coop.	Stephen Ricker	Affirmative	
5	Energy Northwest - Columbia Generating Station	Doug Ramey	Affirmative	
5	Entegra Power Group, LLC	Kenneth Parker	Affirmative	
5	Entergy Corporation	Stanley M Jaskot	Affirmative	
5	FirstEnergy Solutions	Kenneth Dresner		
5	Florida Municipal Power Agency	David Schumann	Affirmative	
5	Green Country Energy	Greg Froehling	Affirmative	
5	Horizon Wind Energy	Brent Hebert	Affirmative	
5	Indeck Energy Services, Inc.	Rex A Roehl	Negative	View
5	JEA	Donald Gilbert	Abstain	
5	Kansas City Power & Light Co.	Scott Heidtbrink		
5	Kissimmee Utility Authority	Mike Blough	Affirmative	
5	Lakeland Electric	Thomas J Trickey	Affirmative	
5	Liberty Electric Power LLC	Daniel Duff	Negative	View
5	Lincoln Electric System	Dennis Florom	Affirmative	
5	Louisville Gas and Electric Co.	Charlie Martin	Affirmative	
5	Luminant Generation Company LLC	Mike Laney	Affirmative	
5	Manitoba Hydro	Mark Aikens		
5	Massachusetts Municipal Wholesale Electric Company	David Gordon	Affirmative	
5	New Harquahala Generating Co. LLC	Nicholas Q Hayes		
5	New York Power Authority	Gerald Mannarino		
5	Northern Indiana Public Service Co.	Michael K Wilkerson	Affirmative	
5	Otter Tail Power Company	Stacie Hebert	Abstain	
5	PacifiCorp	Sandra L. Shaffer	Affirmative	
5	Portland General Electric Co.	Gary L Tingley		
5	PowerSouth Energy Cooperative	Tim Hattaway	Affirmative	
5	PPL Generation LLC	Mark A Heimbach		
5	Progress Energy Carolinas	Wayne Lewis	Affirmative	
5	PSEG Power LLC	David Murray		
5	Public Utility District No. 1 of Lewis County	Steven Grega	Negative	View
5	Reedy Creek Energy Services	Bernie Budnik	Negative	
5	RRI Energy	Thomas J. Bradish	Negative	View
5	Sacramento Municipal Utility District	Bethany Wright	Affirmative	
5	Salt River Project	Glen Reeves	Affirmative	
5	San Diego Gas & Electric	Daniel Baerman	Abstain	
5	Seattle City Light	Michael J. Haynes	Affirmative	View
5	Seminole Electric Cooperative, Inc.	Brenda K. Atkins		
5	South Carolina Electric & Gas Co.	Richard Jones	Affirmative	
5	South Mississippi Electric Power Association	Jerry W Johnson	Affirmative	
5	Southern Company Generation	William D Shultz	Affirmative	
5	Tampa Electric Co.	RJames Rocha	Affirmative	
5	Tenaska, Inc.	Scott M. Helyer	Negative	
5	Tennessee Valley Authority	George T. Ballew	Affirmative	
5	TransAlta Centralia Generation, LLC	Joanna Luong-Tran	Negative	View
5	Tri-State G & T Association, Inc.	Barry Ingold	Negative	
5	U.S. Army Corps of Engineers Northwestern Division	Karl Bryan	Affirmative	
5	U.S. Bureau of Reclamation	Martin Bauer P.E.	Negative	View
5	Wisconsin Electric Power Co.	Linda Horn	Negative	View
5	Wisconsin Public Service Corp.	Leonard Rentmeester	Affirmative	
5	Xcel Energy, Inc.	Liam Noailles	Affirmative	
6	AEP Marketing	Edward P. Cox	Negative	View
6	Ameren Energy Marketing Co.	Jennifer Richardson	Affirmative	
6	Bonneville Power Administration	Brenda S. Anderson	Affirmative	
6	Cleco Power LLC	Matthew D Cripps	Affirmative	
6	Consolidated Edison Co. of New York	Nickesha P Carrol		
6	Constellation Energy Commodities Group	Brenda Powell	Negative	View
6	Dominion Resources, Inc.	Louis S Slade	Affirmative	
6	Duke Energy Carolina	Walter Yeager	Affirmative	
6	Entergy Services, Inc.	Terri F Benoit	Affirmative	

6	Eugene Water & Electric Board	Daniel Mark Bedbury	Affirmative	
6	Exelon Power Team	Pulin Shah	Affirmative	
6	FirstEnergy Solutions	Mark S Travaglianti	Affirmative	View
6	Florida Municipal Power Agency	Richard L. Montgomery	Affirmative	
6	Florida Municipal Power Pool	Thomas E Washburn	Affirmative	
6	Florida Power & Light Co.	Silvia P Mitchell	Affirmative	
6	Great River Energy	Donna Stephenson		
6	Kansas City Power & Light Co.	Thomas Saitta		
6	Lakeland Electric	Paul Shipps	Affirmative	
6	Lincoln Electric System	Eric Ruskamp	Affirmative	
6	Louisville Gas and Electric Co.	Daryn Barker		
6	Luminant Energy	Brad Jones	Affirmative	
6	Manitoba Hydro	Daniel Prowse	Affirmative	
6	New York Power Authority	Thomas Papadopoulos		
6	Northern Indiana Public Service Co.	Joseph O'Brien	Affirmative	
6	Omaha Public Power District	David Ried	Negative	
6	OTP Wholesale Marketing	Bruce Glorvigen	Affirmative	
6	Progress Energy	James Eckelkamp	Affirmative	
6	PSEG Energy Resources & Trade LLC	James D. Hebson	Affirmative	
6	Public Utility District No. 1 of Chelan County	Hugh A. Owen	Abstain	
6	RRI Energy	Trent Carlson	Negative	View
6	Santee Cooper	Suzanne Ritter	Affirmative	
6	Seattle City Light	Dennis Sismaet	Affirmative	View
6	Seminole Electric Cooperative, Inc.	Trudy S. Novak		
6	South Carolina Electric & Gas Co.	Matt H Bullard	Affirmative	
6	Tennessee Valley Authority	Marjorie S. Parsons	Affirmative	
6	Western Area Power Administration - UGP Marketing	John Stonebarger	Affirmative	
6	Xcel Energy, Inc.	David F. Lemmons	Affirmative	
8		James A Maenner	Affirmative	
8		Roger C Zaklukiewicz	Affirmative	
8		Kristina M. Loudermilk		
8		Merle Ashton	Affirmative	
8	Ascendant Energy Services, LLC	Raymond Tran	Affirmative	
8	JDRJC Associates	Jim D. Cyrulewski	Affirmative	
8	Pacific Northwest Generating Cooperative	Margaret Ryan	Abstain	
8	Power Energy Group LLC	Peggy Abbadini		
8	SPS Consulting Group Inc.	Jim R Stanton	Negative	View
8	Utility Services, Inc.	Brian Evans-Mongeon	Negative	View
8	Volkmann Consulting, Inc.	Terry Volkmann	Affirmative	
9	California Energy Commission	William Mitchell Chamberlain	Affirmative	View
9	Commonwealth of Massachusetts Department of Public Utilities	Donald E. Nelson	Affirmative	
9	National Association of Regulatory Utility Commissioners	Diane J. Barney		
9	Oregon Public Utility Commission	Jerome Murray	Affirmative	View
9	Public Service Commission of South Carolina	Philip Riley	Affirmative	
9	Utah Public Service Commission	Ric Campbell	Affirmative	
10	Florida Reliability Coordinating Council	Linda Campbell	Abstain	
10	Midwest Reliability Organization	Dan R. Schoenecker	Affirmative	View
10	New York State Reliability Council	Alan Adamson	Affirmative	
10	Northeast Power Coordinating Council, Inc.	Guy V. Zito	Affirmative	
10	ReliabilityFirst Corporation	Jacquie Smith		
10	SERC Reliability Corporation	Carter B Edge	Affirmative	
10	Western Electricity Coordinating Council	Louise McCarren	Affirmative	View

Copyright © 2010 by the North American Electric Reliability Corporation. : All rights reserved.
A New Jersey Nonprofit Corporation

Individual or group. (27 Responses)
Name (20 Responses)
Organization (20 Responses)
Group Name (7 Responses)
Lead Contact (7 Responses)
Question 1 (25 Responses)
Question 1 Comments (27 Responses)

Individual
James Stanton
SPS Consulting Group Inc.
No
The revised definition perpetuates the confusion over "communications systems" embedded or otherwise associated with Protection Systems. The term "communications components" is more accurate.
Individual
Martin Bauer
US Bureau of Reclamation
No
The term "protection functions" is ambiguous as it is not related to the protection function associated with the protective relays. There are other protection functions not associated with protective relays that respond to electrical quantities. The language for Communication systems should be changed to remove the ambiguity. The following change would be clear, "Communication system necessary for the correct operation of the protective relays" The input to the relays is from voltage and current sensing devices through their respective circuits. Since the definition for protective relays separates the term "control circuitry" associated with protective relays, it is clear that protective relays does not also include the "control circuitry". By the same token, voltage and current sensing devices do not include their related circuits. The definition for voltage and current sensing devices should be revised to include the term "circuits". The following language change would serve make it clear: "Voltage and current sensing devices and their respective circuits providing inputs protective relays,".
Individual
Karl Bryan
US Army Corps of Engineers
No
The use of the term "protection functions" is not a defined NERC term and either the term should be defined or it should not be used. At best the term is ambiguous and could lead to scope growth by auditors. Recommend that the following changes be made: "Communication system necessary for the correct operation of the protective relays." "Control circuitry associated with protective relays through the trip coil(s) of the circuit breaker or other interrupting device." See the next paragraph for the proposed correction to the DC Supply part of the definition. The input to the relay is from voltage and currenct sensing devices yet there is no mention of the associated circuits. The same can be said about the station DC supply circuits. The definition should apply to the circuits providing inputs or control power to the protective relays and from the output of the relays to the tripping coils of the circuit breaker. Recommend the following: "Voltage and current sensing devices and their respective circuits providing inputs to the protective relays." "Station DC supply associated with protective relays (including station batteries, battery charger, non-battery-based DC supply,circuitry to the protective relays and from the relay to the trip coil(s)of the circuit breaker), and"
Group
NERC Staff
Mallory Huggins
No
NERC staff does not support the phrase “voltage and current sensing devices providing input to protective relays.” While no version of the definition has been all-inclusive with respect to this phrase,

we believe that the best phrase would be a combination of several drafts and should state the following: “voltage and current sensing devices and associated circuitry from the voltage and current sensing devices to the protective relay inputs.” As currently written, the definition represents a step backward from the language in the previous definition (“voltage and current sensing inputs to protective relays and associated circuitry from the voltage and current sensing devices”) and should be modified.
Individual
Kirit S. Shah
Ameren
Yes
Group
Arizona Public Service Company
Jana Van Ness, Director Regulatory Compliance
Yes
Group
Northeast Power Coordinating Council
Guy Zito
No
This project addresses the definition of a Protection System. However, an ongoing issue that needs to be addressed is clarification of when a Bulk Electric System transmission Protection System applies to a Distribution Provider. An example would be for a tee-tap off a Bulk Power System 345kV line to a step down transformer supplying distribution--would the relaying on the low side of the transformer be expected to comply with the requirements of PRC-005-2? Would the protection system configuration be considered a Protection System? Will this issue be addressed within the scope of Project 2007-17?
Individual
Greg Froehling
Green Country Energy
Yes
Individual
Dan Roethemeyer
Dynegy Inc.
No
The majority of the definition is good; however, the term "non-battery-based dc supply' is still somewhat vague. Can you please further define or provide some examples?
Individual
Paul Rocha
CenterPoint Energy
No
(a) CenterPoint Energy believes the proposed re-definition of “Protection System” is technically incorrect due to the inclusion of trip coils as part of the control circuitry. A protection system has correctly performed its function if it provides tripping voltage up to the terminals of trip coils. From that point, the circuit breaker can fail to timely interrupt fault current due to several factors, such as a binding mechanism, stuck mechanism, broken pull rod, bad insulating medium, or bad trip coils. Local breaker failure protection, or remote backup protection, is installed to address the various possible causes of circuit breaker failure. The proposed re-definition of “Protection System” should be revised to indicate control circuitry associated with protective functions UP TO THE TERMINALS OF the trip coil(s) of the circuit breakers or other interrupting devices. (b) On the surface, the proposed re-definition of “Protection System” appears mainly applicable to PRC-005 based upon the Standards

Announcement and proposed Implementation Plan. However, NERC standard PRC-004-1 Analysis and Mitigation of Transmission and Generation Protection System Misoperations also uses the capitalized term “Protection System”. CenterPoint Energy believes it is inappropriate to require reporting of Misoperations of transmission Protection Systems and generator Protection Systems for bad trip coils within a circuit breaker. For application to PRC-004-1, CenterPoint Energy recommends revising the proposed re-definition to indicate control circuitry associated with protective functions UP TO THE TERMINALS OF the trip coil(s) of the circuit breakers or other interrupting devices.
Individual
Robert Ganley
LIPA
Yes
Station dc supply associated with protective functions (including station batteries, battery chargers, and non-battery-based dc supply), and .... Change to Station dc supply associated with protective functions, and....
Individual
Andrew Z. Pusztai
American Transmission Company
Yes
None.
Individual
Thad Ness
American Electric Power (AEP)
No
This change in definition needs to occur concurrently with other related projects (PRC-005-2). The SDT nor the SC should establish a practice of making changes to definitions outside the parameters of changes to standards. This will introduce opportunities to confuse and does not provide the appropriate signals to the Registered Entities to adjust their programs and make the appropriate changes. If this has to be done faster than the pace of the current PRC-005-2 project, we suggest it still be paired with that project, but a smaller scope be considered to allow for this to pass quickly as possible and then the remaining work can be accomplished in PRC-005-3. We suggest that the SDT consider the creation of sub-definitions opposed to crafting a single term for complex and diverse components that could make up the “Protection System.” As it stands, AEP cannot support this as it still does not remove the degree of ambiguity that could result in interpretation challenges during later enforcement and monitoring activities. We understand the urgency to make progress; however, the deliverables of this team can have significant collateral impacts in the compliance process. The bullet for Protective relays should be further clarified with the addition of “applied on or designed to provide protection for the BES that respond to the electrical fault or disturbance conditions.” Below are the comments that were provided in the second draft that were not adequately addressed in the consideration of the comments. The definition as drafted includes "Station dc supply." While this appears reasonable and innocuous, the term is unclear and could be construed by an auditor to include a lot of equipment and infrastructure not intended by the PSMT SDT. For example, station battery chargers are typically supplied by station auxiliary power transformers, which in turn are supplied by primary-voltage bus work, primary-voltage fuses, or primary-voltage circuit breakers. An auditor for either PRC-005 or any other Standard referencing "Protection System" could read that such primary-voltage equipment is part of the Protection System and therefore subject to certain requirements in either PRC-005 or any other Standard referencing Protection System. The definition as drafted includes "Communications systems necessary. . . ". Once again, this term appears innocuous, but it is actually unclear. For example, if a transfer-trip channel is carried on a microwave path, an auditor may decide that the entire microwave equipment, microwave building battery, and microwave building emergency generator are all part of the Protection System, and thus subject to requirements in either PRC-005 or other existing or future Standards that refer to Protection System. AEP recommends that the term be phrased "communications paths" opposed to "communications systems". Similar to the above two items, we are concerned about the inclusion of voltage and current-sensing "devices" in the Definition. As written, applicability can be inferred to the entire device and not merely its output quantities, not only for this Standard but any other that references a

Protection System. AEP recommends the phrase "circuitry from voltage and current-sensing devices providing inputs to protective relays" instead of "voltage and current-sensing devices providing inputs to protective relays."
Group
Bonneville Power Administration
Denise Koehn
Yes
Individual
Kasia Mihalchuk
Manitoba Hydro
Yes
Individual
Kathleen Goodman
ISO New England Inc.
Yes
Individual
Patti Metro
NRECA
My comment is related to the Implementation plan which will modify the PER-005. I am specifically concerned with changing in R3.1 “established operating guides or “protection systems” to mitigate IROL violations” to “established operating guides or “Protection Systems” to mitigate IROL violations”. This modification changes the intent of requirement PER-005 R3.1. The requirement was developed by the drafting team to address an Order 693 directive to require the use of simulators by reliability coordinators, transmission operators and balancing authorities that have operational control over a significant portion of load and generation. The System Personnel Training SDT felt that the use of the phrase “established IROLs or has established operating guides or protection systems to mitigate IROL violations” appropriately represents the impact of entities on the reliability of the BES. In the context of PER-005 R3.1, this specific language was used to broadly include anything that an entity utilizes to prevent an IROL which could be an “operating guide or a protection system” like a RAS in WECC or an SPS in the Eastern Interconnection. It was not intended to include all the items included in the term that is being defined in Project 2007-17.
Individual
RoLynda Shumpert
South Carolina Electric and Gas
Yes
Individual
Terry Harbour
MidAmerican Energy
No
The drafting team did not properly address previous comments to include BES references in each PRC-005 sub bullet definitions and left "DC system" wording in the definition with only a comment in parentheses. The Protection System definition affects multiple standards and must stand alone across those standards. Therefore: 1. BES references are still needed in each sub bullet definition to eliminate ambiguity and to create clearly auditable requirements, meeting a basic standards drafting principal being requested both by FERC and the industry. 2. "DC system" remains a wide open definition. Because regulators and auditors are auditing to "zero" defect requirements and imposing their own interpretations, only specific wording is acceptable. The term "DC system" needs to be replaced with explicit pieces of equipment such as "batteries, battery chargers, and AC / DC

converters". To be a credible audit process, both the auditor and audited entity must have a clear understanding of what is being audited. DC system can be interpreted in many ways by an entity or auditor and is not an acceptable term. Further, BES references are needed to create clear and auditable boundaries for this definition.
Group
WECC
Steve Rueckert
The definition is generally accepable. However, we believe that better language for the third bullet is as follows: DC supply sources affecting the "Protection System" (including station batteries, battery chargers, and non-battery-based dc supply), and… A definition of non-battery-based dc supply should be included to avoid confusion and we offer the following: The inverter or rectifier in the circuit, dependent upon how the end use quipment is designed. Uninterruptible power supply (UPS) such as on-line, line-interactive or standby that some of the protection system could be on. The intent of the suggestion would consider that the entire protection system has to operate in order to maintain the reliability of the BES. An example would be if the protective relay and associated communications were on a UPS system and the intended device to operate were on station batteries, this would be the best case scenario as the Micro processors relays and the newer associated communications do not like the voltage drop when the station switches to the station batteries, hence the use of UPS options. Micro processors relays do have internal battery backup to keep them up and running, though a maintenance task would have to be included to be sure that they are properly maintained and tested, so the UPS option is easier and has been “kind of” an industry standard in the past. In the end the UPS would have to be on a maintenance schedule also.
Individual
Michael Lombardi
Northeast Utilities
Yes
Individual
Dan Rochester
Independent Electricity System Operator
No
While we agree with the definition itself, we do have a concern about its application. An ongoing issue that needs to be addressed is clarification of when a Bulk Electric System transmission Protection System applies to a Distribution Provider. This was addressed in part in the interpretation request regarding transmission Protection Systems, Project 2009-17. An example would be for a tee-tap off a Bulk Power System 345kV line to a step down transformer supplying distribution -- would the relaying on the low voltage side of the transformer be expected to comply with the requirements of PRC-005-2? Would the protection system configuration be considered a Protection System? Will this issue be addressed within the scope of Project 2007-17?
Individual
Jason L. Marshall
Midwest ISO
No
We have an issue with the implementation plan. The implementation plan proposes to capitalize the term "protection system" in NUC-001-2, PER-005-1, and PRC-001-1. We disagree with capatilizing the term because protection system was a defined term when these standards were written. Thus, if the drafting teams of those standards intended for the definition in the NERC glossary of terms to apply, they would have capatilized the term. Furthermore, capitalizing the term may fundamentally alter the meaning of the standard. For PER-005-1, we believe the standard is altered because protection system as used in this standard actually refers to special protection system or remedial action schemes.
Individual
Greg Rowland
Duke Energy

Yes
We agree with the revised definition. However the added language raises a question regarding how PRC-005-2 would be applied to DC supply situations where the battery is the backup to the “normal” source of DC power. Specifically, it’s unclear to us that Uninterruptible Power Supplies (UPS), rectifiers and motor-generator sets that use batteries as a backup are included in the scope of Table 1.
Individual
Alice Murdock Ireland
Xcel Energy
Yes
The Implementation Plan indicates that the lower case “protection system” in 3 other standards would be replaced with the capitalized term “Protection System” to properly reflect its use in those standards. In PRC-001 the term “protective system” is also used, however the Implementation Plan does not indicate whether this term will also be replaced. If not, then it would seem to imply that the term “protective system” has different meaning than “protection system/Protection System”. There is concern that the use of “Protection System” in PRC-001 will require entities to ‘coordinate” changes to all elements of the Protection System, which could be of no value for elements such as batteries, battery chargers. It is not clear as to if the intent that ALL elements of the Protection System be coordinated when a new or changed Protection System occurs.
Group
IRC Standards Review Committee
Ben Li
Yes
Group
Kansas City Power & Light
Michael Gammon
No
The phrase, "non-battery-based dc supply" is ambigous and not well defined. It is critical this definition be clear in its intent and not introduce confusion to allow maintenance programs to be effective. Recommend this phrase either needs additional definition or should be considered for removal.

NERC
NORTH AMERICAN ELECTRIC RELIABILITY CORPORATION

Consideration of Comments on Third Ballot — Project 2007-17 Protection System Maintenance (Protection System definition)

Dates of Third Ballot: 10/2/10 - 10/14/10

Summary: A successive ballot of the definition of Protection System was conducted from October 2-14, 2010 and achieved a quorum and an overall weighted segment approval of 84.52%.

Numerous balloters confused the definition with its applicability in various standards. Several balloters questioned the applicability of this defined term in PER-005 and the SDT modified the Implementation Plan for the definition to remove the reference to PER-005.

Several balloters used the ballot period as a forum to show displeasure with the NERC and Regional BES definitions. Modifying the definition of Bulk Electric System is outside the scope of this drafting team.

Some balloters made suggestions to modify various portions of the definition, however most balloters supported the definition as posted and the drafting team did not adopt any suggestions for further modifications to the definition.

Several balloters opposed this ballot because they felt the definition of Protection System should not have been balloted separately from the draft standard PRC-005-2. When the Board of Trustees was asked to approve an interpretation of PRC-005-1 that was written by the PSMT SDT, the board acknowledged the reliability gap identified by the drafting team caused by the definition of "protection system" and directed that work to close this reliability gap should be given “priority.” To close this reliability gap the BOT directed that the revised definition be applied to PRC-005-1 as soon as practical - not years from now. The implementation plan allows entities at least 12 months to apply the new definition to PRC-005-1, and that should give entities time to apply the new definition to PRC-005-1.

Segment	Entity	Member	Ballot	Comments
1 5	American Electric Power AEP Service Corp.	Paul B. Johnson Brock Ondayko	Negative	1. This change in definition needs to occur concurrently with other related projects (PRC-005-2). Neither the SDT nor the SC should establish a practice of making changes to definitions outside the parameters of changes to standards. This will introduce opportunities for confusion and does not provide the appropriate signals to the Registered Entities to adjust their programs and make the appropriate

Segment	Entity	Member	Ballot	Comments
6	AEP Marketing	Edward P. Cox		changes. If this has to be done faster than the pace of the current PRC-005-2 project, we suggest it still be paired with that project, but a smaller scope be considered to allow for this to pass quickly as possible and then the remaining work can be accomplished in PRC-005-3. 2. We suggest that the SDT consider the creation of sub-definitions opposed to crafting a single term for complex and diverse components that could make up the Protection System. As it stands, AEP cannot support this as it still does not remove the degree of ambiguity that could result in interpretation challenges during later enforcement and monitoring activities. We understand the urgency to make progress; however, the deliverables of this team can have significant collateral impacts in the compliance process. 3. The bullet for Protective relays should be further clarified with the addition of applied on or designed to provide protection for the BES that responds to the electrical fault or disturbance conditions. 4. Below are the comments that were provided in the second draft that were not adequately addressed in the consideration of the comments. A. The definition as drafted includes "Station dc supply." While this appears reasonable and innocuous, the term is unclear and could be construed by an auditor to include a lot of equipment and infrastructure not intended by the PSMT SDT. For example, station battery chargers are typically supplied by station auxiliary power transformers, which in turn are supplied by primary-voltage bus work, primary-voltage fuses, or primary-voltage circuit breakers. An auditor for either PRC-005 or any other Standard referencing "Protection System" could read that such primary-voltage equipment is part of the Protection System and therefore subject to certain requirements in either PRC-005 or any other Standard referencing Protection System. B. The definition as drafted includes "Communications systems necessary. . . ". Once again, this term appears innocuous, but it is

Segment	Entity	Member	Ballot	Comments
				actually unclear. For example, if a transfer-trip channel is carried on a microwave path, an auditor may decide that the entire microwave equipment, microwave building battery, and microwave building emergency generator are all part of the Protection System, and thus subject to requirements in either PRC-005 or other existing or future Standards that refer to Protection System. AEP recommends that the term be phrased "communications paths" opposed to "communications systems". C. Similar to the above two items, we are concerned about the inclusion of voltage and current-sensing "devices" in the Definition. As written, applicability can be inferred to the entire device and not merely its output quantities, not only for this Standard but any other that references a Protection System. AEP recommends the phrase "circuitry from voltage and current-sensing devices providing inputs to protective relays" instead of "voltage and current-sensing devices providing inputs to protective relays."

Response: When the Board of Trustees was asked to approve an interpretation of PRC-005-1 that was written by the PSMT SDT, the board acknowledged the reliability gap identified by the drafting team caused by the definition of "protection system" and directed that work to close this reliability gap should be given "priority." To close this reliability gap the BOT has directed that revised definition be applied to PRC-005-1 as soon as practical - not years from now. The implementation plan now proposes at least 12 months for entities to apply the new definition to PRC-005-1, and that should give entities time to apply the new definition to PRC-005-1.

2. The SDT believes the current draft of the definition as balloted is clear, concise, and supported by industry.

3. The SDT believes these questions are not within the scope of Project 2007-17 and should be addressed by the Regional Entities.

4A. The SDT believes the current draft of the definition as balloted is clear, concise, and supported by industry. The definition of Protection System with regards to dc supply has been modified and now reads: Station dc supply associated with protective functions (including station batteries, battery chargers, and non-battery-based dc supply).

4B. The SDT believes your comment pertains to standards and requirements, and not the definition of Protection System.

4C. The SDT believes the current draft of the definition as balloted is better supported by industry.

Segment	Entity	Member	Ballot	Comments
1	Baltimore Gas & Electric Company	John J. Moraski	Negative	The definition can be read to imply an obligation to test PTs and CTs in a way that exceeds the apparent intention of the SDT as expressed in the FAQs. The definition should be constructed so as to present no conflict with idea that the standard can be met by verifying the correctness of signal delivered from PTs and CTs to protective relays. Suggestive language included with the previous ballot --- Protection System: Protective relays which respond to electrical quantities, communication systems necessary for correct operation of protective functions, voltage and current sensing device output circuits and the associated circuits to the inputs of protective relays, station dc supply, and control circuitry associated with protective functions through the trip coil(s) of the circuit breakers or other interrupting devices.
Response: The SDT believes your comment is aimed at revising the definition so that it achieves a particular outcome when applied to specific requirements in the proposed PRC-005. The team is trying to develop a definition that would be applicable for use in several standards, and does not want to make modifications to the definition that would limit the term's applicability.				
1	Colorado Springs Utilities	Paul Morland	Negative	CSU feels that battery chargers should not be included in the "Protection System" definition based on the following: Battery chargers are not a single point of immediate failure. As long as real-time station battery monitoring is provided, a reliable protection system will be maintained.
Response: When the Board of Trustees was asked to approve an interpretation of PRC-005-1 that was written by the PSMT SDT, the board acknowledged the reliability gap identified by the drafting team caused by the definition of "protection system" not including battery chargers, and directed that work to close this reliability gap should be given “priority.” To close this reliability gap the BOT has directed that revised definition be applied to PRC-005-1 as soon as practical - not years from now. The implementation plan now proposes at least 12 months for entities to apply the new definition to PRC-005-1, and that should give entities time to apply the new definition to PRC-005-1.				
1 3 6	FirstEnergy Energy Delivery FirstEnergy Solutions FirstEnergy Solutions	Robert Martinko Kevin Querry Mark S Travaglianti	Affirmative	FirstEnergy supports the definition and thanks the drafting team for incorporating our suggestion for clarification of the phrase "station dc supply".

Segment	Entity	Member	Ballot	Comments
4	Ohio Edison Company	Douglas Hohlbaugh		
Response: The SDT appreciates your support.				
1	MidAmerican Energy Co.	Terry Harbour	Negative	The drafting team did not properly address previous comments to include BES references in each PRC-005 sub bullet definitions and left "DC system" wording in the definition with only a comment in parentheses. The Protection System definition affects multiple standards and must stand alone across those standards. Therefore: 1. BES references are still needed in each sub bullet definition to eliminate ambiguity and to create clearly auditable requirements, meeting a basic standards drafting principal being requested both by FERC and the industry. 2. "DC system" remains a wide open definition. Because regulators and auditors are auditing to "zero" defect requirements and imposing their own interpretations, only specific wording is acceptable. The term "DC system" needs to be replaced with explicit pieces of equipment such as "batteries, battery chargers, and AC / DC converters". To be a credible audit process, both the auditor and audited entity must have a clear understanding of what is being audited. DC system can be interpreted in many ways by an entity or auditor and is not an acceptable term. Further, BES references are needed to create clear and auditable boundaries for this definition.
Response: The SDT believes your comment is aimed at revising the definition so that it achieves a particular outcome when applied to specific requirements in the proposed PRC-005. The team is trying to develop a definition that would be applicable for use in several standards, and does not want to make modifications to the definition that would limit the term's applicability.				

Segment	Entity	Member	Ballot	Comments
1	Nebraska Public Power District	Richard L. Koch	Affirmative	1. Please provide the reasoning for including the battery chargers. Where do you draw the line of what is included. For example, should the panel providing power to the chargers be included? 2. Better clarification is needed when defining the DC control circuit. The trip coils are identified on one end of the circuit but nothing is identified upstream of the trip coils. For example, control switches, indicators, auxiliary relays, power supply breakers, etc.
Response: 1. When the Board of Trustees was asked to approve an interpretation of PRC-005-1 that was written by the PSMT SDT, the board acknowledged the reliability gap identified by the drafting team caused by the definition of "protection system" not including battery chargers, and directed that work to close this reliability gap should be given "priority." The definition of Protection System with regards to dc supply has been modified and now reads: Station dc supply associated with protective functions (including station batteries, battery chargers, and non-battery-based dc supply). The SDT believes this clearly limits the dc supply. 2. The SDT believes the balloted definition includes all the control circuitry essential for the Protection System to function properly.				
1	Pacific Gas and Electric Company	Chifong L. Thomas	Negative	We disagree with the drafting team response to comments that the term BES should be included only in the standard. It is an essential part of the definition as it pertains to the purpose of NERC Standards. As a result we have changed our vote to negative. We view the basic intent of this definition is to identify what protective systems in facilities are to be utilized to protect the BES from two primary troubles 1) minimize interruption of the flow of electrical power from one portion of the BES to another, and 2) to prevent the propagation of BES trouble from one portion of the BES to another. While we agree that protection systems for all transmission related components can be adequately limited in scope by utilizing "electrical quantities", we do not feel that it is adequate for generating facilities. There are multitudes of elements in generating facilities that can remove the facility from service and impact the power flow from the facility to other portions of the BES. The efforts utilized thus far demonstrate that it is not desirable or realistically possible to address all devices from an oversight point of view and that the current definition which discriminates solely with the qualifier of "electrical quantities" is too broad and leaves much open to interpretation to define what types of protection are included in the definition. The definition, as it currently reads, leaves many protective devices to the owner/operator to manage for

Segment	Entity	Member	Ballot	Comments
				maximum reliability of the generating facility. In the interest of clarity the definition should limit the scope for protective relays to those relays designed to prevent the propagation of trouble from one portion of the BES to another. We recommend changing the proposed definition to read as follows: A control system designed to detect electrical faults or abnormal conditions in the power system and initiate corrective action(s). A protection system consists of the following components: 1. Protective relays which protect: a) Transmission BES elements, including generating facility step up transformers, and respond to power system electrical quantities such as voltage and current, b) Generating facilities by responding to power system electrical quantities, such as voltage and current, and are designed to protect against potential problems in the BES on the high side of the generator step up transformer. 2. Communications systems necessary for correct operation of protective functions, 3. Voltage and current sensing devices which transform high level power system quantities to low level inputs for protective relays, and the associated circuitry to the inputs for protective relays. 4. Station DC supply associated with protective relay power supplies and control functions (including station batteries, battery chargers, and non-battery-based DC supply), and 5. Control circuitry associated with protective relay functions (including auxiliary relays) through the trip coil(s) of the circuit breakers or other interrupting devices.
Response: The SDT believes your comment is aimed at revising the definition so that it achieves a particular outcome when applied to specific requirements in the proposed PRC-005. The team is trying to develop a definition that would be applicable for use in several standards, and does not want to make modifications to the definition that would limit the term's applicability. The applicability of the definition of Protection System will be addressed in the various standards which utilize the definition. The SDT believes the current draft of the definition as balloted is better supported by industry.				
1 3 4 5	Seattle City Light	Pawel Krupa Dana Wheelock Hao Li Michael J. Haynes	Affirmative	Seattle supports this definition with the understanding that issues that have been previously addressed through comment will be considered during the Standard development process.

Segment	Entity	Member	Ballot	Comments
6		Dennis Sismaet		
Response: The SDT appreciates your support.				
1 3	Tri-State G & T Association, Inc.	Keith V. Carman Janelle Marriott	Negative	2nd bullet - Add communication-aided before protective functions. We think that this is important because you can have correct operation of protective functions without the communication-aided tripping functions operating correctly, especially with POTT or DCUB schemes. 5th bullet - replace through with including. We think that the phrase through the trip coil could be misinterpreted to mean protective functions that cause current to flow through the trip coil rather than the inclusive meaning such as from A through Z. If the intent of the drafting team is to exclude the trip coil, then we think it should be changed to control circuitry associated with protective functions required to operate the trip coil(s) of the circuit breakers or other interrupting devices.
Response: The SDT believes the current draft of the definition as balloted is clear, concise, and supported by industry.				

Segment	Entity	Member	Ballot	Comments
1	Western Area Power Administration	Brandy A Dunn	Negative	The term "protection functions" is ambiguous as it is not related to the protection function associated with the protective relays. There are other protection functions not associated with protective relays that respond to electrical quantities. The language for Communication systems should be changed to remove the ambiguity. The following change would be clear, "Communication system necessary for the correct operation of the protective relays" The input to the relays is from voltage and current sensing devices through their respective circuits. Since the definition for protective relays separates the term "control circuitry" associated with protective relays, it is clear that protective relays do not also include the "control circuitry". By the same token, voltage and current sensing devices do not include their related circuits. The definition for voltage and current sensing devices should be revised to include the term "circuits". The following language change would serve make it clear: "Voltage and current sensing devices and their respective circuits providing inputs protective relays,".
5	U.S. Bureau of Reclamation	Martin Bauer P.E.	Negative	The term "protection functions" is ambiguous as it is not related to the protection function associated with the protective relays. There are other protection functions not associated with protective relays that respond to electrical quantities. The language for Communication systems should be changed to remove the ambiguity. The following change would be clear, "Communication system necessary for the correct operation of the protective relays" The input to the relays is from voltage and current sensing devices through their respective circuits. Since the definition for protective relays separates the term "control circuitry" associated with protective relays, it is clear that protective relays do not also include the "control circuitry". By the same token, voltage and current sensing devices do not include their related circuits. The definition for voltage and current sensing devices should be revised to include the term "circuits". The following language change would serve make it clear: "Voltage and current sensing devices and their respective circuits providing correct inputs to protective relays."

Segment	Entity	Member	Ballot	Comments
Response: The SDT believes the current draft of the definition as balloted is clear, concise, and supported by industry.				
2	Midwest ISO, Inc.	Jason L Marshall	Negative	We disagree with the implementation plan. The implementation plan calls for capitalizing protection system in NUC-001-2 and PER-005-1. Because Protection System had been included in the NERC Glossary of Terms before the development of these standards, we believe the drafting teams would have capitalized those terms in these standards if they had intended for the Protection System definition to apply. Furthermore, we believe the use of protection system PER-005-1 was actually intended to be special protection systems or remedial actions schemes. To capitalize protection system in PER-005-1 will fundamentally alter the requirement in which it is contained.
Response: The SDT agrees and will revise the Implementation Plan to remove PER-005 from the list of standards to be modified. However, the SDT believes the term Protection System should be capitalized as described in the Implementation Plan for NUC-001-2.				
3 4 5	Consumers Energy	David A. Lapinski David Frank Ronk James B Lewis	Negative	We understand that this posting is intended to address perceived flaws in the currently approved definition. However, since this change, if approved, is likely to result in changes to an entity's PRC-005-1 maintenance program, we feel that it is inappropriate to approve this definition without simultaneous approval of the revised PRC-005-2 which will clarify the related changes to maintenance programs.
Response: When the Board of Trustees was asked to approve an interpretation of PRC-005-1 that was written by the PSMT SDT, the board acknowledged the reliability gap identified by the drafting team caused by the definition of "protection system" not including battery chargers, and directed that work to close this reliability gap should be given “priority.” To close this reliability gap the BOT has directed that revised definition be applied to PRC-005-1 as soon as practical - not years from now. The implementation plan now proposes at least 12 months for entities to apply the new definition to PRC-005-1, and that should give entities time to apply the new definition to PRC-005-1.				
3	MidAmerican Energy Co.	Thomas C. Mielnik	Negative	BES references are needed in each sub bullet definition to eliminate ambiguity and to create clearly auditable requirements. The term "DC system" needs to be replaced with explicit pieces of equipment such as "batteries, battery chargers, and AC / DC converters".
Response: The SDT believes these comments relative to BES are not within the scope of Project 2007-17 and should be addressed by the Regional Entities; and that the current draft of the definition as balloted is clear, concise, and contains the specific dc systems equipment you mention.				

Segment	Entity	Member	Ballot	Comments
3	San Diego Gas & Electric	Scott Peterson	Affirmative	SDG&E believes that the following changes should be incorporated. Third item: DC supply sources affecting the "Protection System" (including station batteries, battery chargers, and non-battery-based dc supply), and SDG&E also believe that a definition of non-battery-based dc supply should be included to avoid confusion and recommend the following: "The inverter or rectifier in the circuit, dependent upon how the end use equipment is designed. Uninterruptible power supply (UPS) such as on-line, line-interactive or standby that some of the protection system could be on."
Response: The SDT appreciates your support, and believes the current draft of the definition as balloted is clear, concise, and supported by industry. The term “non-battery-based dc supply” is meant to be a broad term to capture other methods such as flywheels, compressed air, fuel cells, or any other emerging technology which is capable of supplying dc power to the Protection System.				
3 4 5	Wisconsin Electric Power Marketing Wisconsin Energy Corp. Wisconsin Electric Power Co.	James R. Keller Anthony Jankowski Linda Horn	Negative	1. The Protection System definition needs to indicate that the listed items after relays are intended to be associated with relays. As written, most of the items apply to undefined "protective functions". The Implementation Plan's change to PER-005-1 R3.1 restricts where R3.1 applies. For example, changing "protection systems" to "Protection Systems" will exclude an SPS that does not operate relays. Replace term "voltage & current sensing devices" with "voltage & current sensing inputs to protective relays". 2. Remove the battery chargers from the definition and make reference to station batteries only. There needs to be improved coordination between proposed changes and definitions and the associated proposed changes and testing.
Response: 1. The drafting team does not believe that the additional language is needed in the definition. The SDT agrees with the comment on PER-005 and will revise the Implementation Plan to remove PER-005 from the list of standards to be modified. 2. When the Board of Trustees was asked to approve an interpretation of PRC-005-1 that was written by the PSMT SDT, the board acknowledged the reliability gap identified by the drafting team caused by the definition of "protection system" not including battery chargers, and directed that work to close this reliability gap should be given “priority.” To close this reliability gap the BOT has directed that revised definition be applied to PRC-005-1 as soon as practical. The SDT believes the current draft of the definition as balloted is clear, concise, and supported by industry.				

Segment	Entity	Member	Ballot	Comments
4	Madison Gas and Electric Co.	Joseph G. DePoorter	Affirmative	Believe that Communication systems necessary for correct operation of protective "relay" functions be considered as an enhancement to the definition. This would also need to be added within the Station dc supply and Control circuitry bullets. This will provide clarity to exactly what the definition is describing.
Response: The SDT appreciates your support. The SDT believes the current draft of the definition as balloted is clear, concise, and supported by industry.				
5	Constellation Power Source Generation, Inc.	Amir Y Hammad	Negative	Constellation has previously voted against these revised definitions because as written, it implies that the testing of PTs and CTs in PRC-005 is required. This latest proposal is no different. Constellation agrees with the SDT in that current and voltage sensing devices are an important aspect of the Protection System. However, by including PTs and CTs in the definition, auditors have been interpreting that as stating that dielectric testing and other tests are necessary on them. This does not seem to be the intention of the SDT. The intention of the SDT seems to be to verify that the sensing devices are delivering acceptable signals to relays. Table 1 a of the PRC-005-2 standard includes: Voltage & Current Sensing Devices / 12 Calendar Years / Verify proper functioning of the current and voltage circuit inputs from the voltage and current sensing devices to the protective relays. The FAQ for PRC-005-2 is even clearer in stating that ensuring the protection system is receiving the expected values from current and voltage sensing devices. But neither the originally revised or newly revised definitions carry that implication very well. The definitions are still including the devices themselves and not their outputs. To make the definition less ambiguous with PTs and CTs, Constellation proposes the following change in the definition: Voltage and current sensing devices providing inputs to protective relays to; Voltage and current sensing device output circuits and the associated circuits to the inputs of protective relays.

Segment	Entity	Member	Ballot	Comments
6	Constellation Energy Commodities Group	Brenda Powell	Negative	Constellation has previously voted against these revised definitions because as written, it implies that the testing of PTs and CTs in PRC-005 is required. This latest proposal is no different. Constellation agrees with the SDT in that current and voltage sensing devices are an important aspect of the Protection System. However, by including PTs and CTs in the definition, auditors have been interpreting that as stating that dielectric testing and other tests are necessary on them. This does not seem to be the intention of the SDT. The intention of the SDT seems to be to verify that the sensing devices are delivering acceptable signals to relays. Table 1 a of the PRC-005-2 standard includes: Voltage & Current Sensing Devices / 12 Calendar Years / Verify proper functioning of the current and voltage circuit inputs from the voltage and current sensing devices to the protective relays. The FAQ for PRC-005-2 is even clearer in stating that ensuring the protection system is receiving the expected values from current and voltage sensing devices. The definitions are still including the devices themselves and not their outputs. To make the definition less ambiguous with PTs and CTs, Constellation proposes the following change in the definition: Voltage and current sensing devices providing inputs to protective relays to; Voltage and current sensing device output circuits and the associated circuits to the inputs of protective relays.
Response: The SDT believes your comment is aimed at revising the definition so that it achieves a particular outcome when applied to specific requirements in the proposed PRC-005. The team is trying to develop a definition that would be applicable for use in several standards, and does not want to make modifications to the definition that would limit the term's applicability.				
5	Dynegy Inc.	Dan Roethemeyer	Affirmative	Please clarify "non-battery-based dc supply". It is vague.
Response: The SDT appreciates your support, and believes the current draft of the definition as balloted is clear, concise, and supported by industry. The term “non-battery-based dc supply” is meant to be a broad term to capture other methods such as flywheels, compressed air, fuel cells, or any other emerging technology which is capable of supplying dc power to the Protection System.				

Segment	Entity	Member	Ballot	Comments
5	Indeck Energy Services, Inc.	Rex A Roehl	Negative	Neither batteries nor battery chargers are part of protection systems. They may be included in protection system maintenance procedures, but are not part of a protection system. Similarly, current and voltage measuring devices that are used for metering or monitoring and not exclusively for protection, are not part of the protection system, but may be included in protection system maintenance. THE SDT seems to have tried to incorporate some of the PRC standards with this definition rather than focusing on the one element being defined.
Response: When the Board of Trustees was asked to approve an interpretation of PRC-005-1 that was written by the PSMT SDT, the board acknowledged the reliability gap identified by the drafting team caused by the definition of "protection system" not including battery chargers, and directed that work to close this reliability gap should be given "priority." To close this reliability gap the BOT has directed that revised definition be applied to PRC-005-1 as soon as practical - not years from now.				
5	Liberty Electric Power LLC	Daniel Duff	Negative	Battery chargers are not protection system elements. This part of the definition should be redacted.
Response: When the Board of Trustees was asked to approve an interpretation of PRC-005-1 that was written by the PSMT SDT, the board acknowledged the reliability gap identified by the drafting team caused by the definition of "protection system" not including battery chargers, and directed that work to close this reliability gap should be given "priority." To close this reliability gap the BOT has directed that revised definition be applied to PRC-005-1 as soon as practical - not years from now.				
5	Public Utility District No. 1 of Lewis County	Steven Grega	Negative	Do not support the expanded definition of the protection system. Battery chargers are not part of the protection system.
Response: : When the Board of Trustees was asked to approve an interpretation of PRC-005-1 that was written by the PSMT SDT, the board acknowledged the reliability gap identified by the drafting team caused by the definition of "protection system" not including battery chargers, and directed that work to close this reliability gap should be given "priority." To close this reliability gap the BOT has directed that revised definition be applied to PRC-005-1 as soon as practical - not years from now.				

Segment	Entity	Member	Ballot	Comments
5 6	RRI Energy	Thomas J. Bradish Trent Carlson	Negative	It is not appropriate to define the battery or chargers as protection system elements. For DC circuits or supply, the definition and subsequent boundary of the protection system should end at the fuses or circuit breakers of the sources supplying the individual DC control circuits of the protection system. For a typical power plant station battery, the percent of the battery capacity sized for the protection system is very small. The battery and chargers are power source elements, not protection elements. Likewise, all intermediate power distribution elements between the battery, chargers, and dedicated protection system branch circuits, do not belong in the definition of the Protection System.
Response: : When the Board of Trustees was asked to approve an interpretation of PRC-005-1 that was written by the PSMT SDT, the board acknowledged the reliability gap identified by the drafting team caused by the definition of "protection system" not including battery chargers, and directed that work to close this reliability gap should be given “priority.” To close this reliability gap the BOT has directed that revised definition be applied to PRC-005-1 as soon as practical - not years from now.				
5	TransAlta Centralia Generation, LLC	Joanna Luong-Tran	Negative	To increase the clarity of the definition, TransAlta proposes the following: Control circuitry associated with protective functions through to and including the trip coil(s) of the circuit breakers or other interrupting devices
Response: The SDT believes the current draft of the definition as balloted is clear, concise, and supported by industry.				

Segment	Entity	Member	Ballot	Comments
8	SPS Consulting Group Inc.	Jim R Stanton	Negative	The term "Communication System" remains in the definition, despite the reality that at least for most generators, there is no communication system within the Protection System. Communication from device to device, such as a protective relay to a trip coil or alarm, it not a "system" per se but merely a wire connecting the devices. Keeping this definition as is perpetuates the confusion of generators when they design, modify and execute their protection system maintenance and testing program as the definition of the Protection System requires addressing a "communication system" which they do not have. Keeping the definition as is could lead to confused auditors who insist on literal adherence to the requirement language, clouding the audit and imposing ad hoc and perhaps inconsistent interpretations for audits, spot checks and self reports. What will most surely happen if this definition is approved is a quick request for interpretation by one or more entities seeking clarification on the requirement to include "communication systems" within their maintenance and testing program when they in fact have no such system. All this can be avoided by changing the term "communication systems" to "communication components." This is a primary example of fixing something on the front end so we don't have to go through interpretations and revisions to fix an ambiguity. This definition would also not pass a Quality Review due to the ambiguity of terms.
Response: The SDT believes the language is clear and addresses relay communication systems currently used by industry.				
8	Utility Services, Inc.	Brian Evans-Mongeon	Negative	While the language by itself is supportable, the definition is not complete. The SDT has still not addressed the question of when the definition will apply to Distribution Providers. Many DPs own and or operate the elements listed in the definition; however, the definition lacks clarity when such ownership or operation is subject to the performance obligations under the standard.
Response: This clarification is provided in each requirement that uses the term, “Protection System” by identifying the responsible entity. The comment relates to "application" of the definition, not to the definition.				

Segment	Entity	Member	Ballot	Comments
9	California Energy Commission	William Mitchell Chamberlain	Affirmative	The proposed definition is generally acceptable. However, a slight modification to the third bullet in the definition would be an improvement to the proposed wording: "DC supply sources affecting the 'Protection System' (including station batteries, battery chargers, and non-battery-based dc supply), and " In addition, a definition of non-battery-based dc supply should be included to avoid confusion we recommend the following: "The inverter or rectifier in the circuit, dependent upon how the end use equipment is designed. Uninterruptible power supply (UPS) such as on-line, line-interactive or standby that some of the protection system could be on."
Response: The SDT appreciates your support. The SDT believes the current draft of the definition as balloted is clear, concise, and supported by industry. The term “non-battery-based dc supply” is meant to be a broad term to capture other methods such as flywheels, compressed air, fuel cells, or any other emerging technology which is capable of supplying dc power to the Protection System.				
9	Oregon Public Utility Commission	Jerome Murray	Affirmative	Although I voted yes, I recommend the following proposed wording for the third bullet: DC supply sources affecting the "Protection System" (including station batteries, battery chargers, and non-battery-based dc supply), and Also the definition of non-battery-based dc supply should be included to avoid confusion. I recommend the following: The inverter or rectifier in the circuit, dependent upon how the end use equipment is designed. Uninterruptible power supply (UPS) such as on-line, line-interactive or standby that some of the protection system could be on.
Response: The SDT appreciates your support. The SDT believes the current draft of the definition as balloted is clear, concise, and supported by industry. The term “non-battery-based dc supply” is meant to be a broad term to capture other methods such as flywheels, compressed air, fuel cells, or any other emerging technology which is capable of supplying dc power to the Protection System.				
10	Midwest Reliability Organization	Dan R. Schoenecker	Affirmative	Suggest the second bullet language replace the term correct with the intended. Communications systems necessary for the intended operation of protective functions.
Response: The SDT appreciates your support. The SDT believes the current draft of the definition as balloted is clear, concise, and supported by industry.				

Segment	Entity	Member	Ballot	Comments
10	Western Electricity Coordinating Council	Louise McCarren	Affirmative	The definition is generally acceptable. However, we believe that better language for the third bullet is as follows: DC supply sources affecting the "Protection System" (including station batteries, battery chargers, and non-battery-based dc supply), and A definition of non-battery-based dc supply should be included to avoid confusion and we offer the following: The inverter or rectifier in the circuit, dependent upon how the end use equipment is designed. Uninterruptible power supply (UPS) such as on-line, line-interactive or standby that some of the protection system could be on. The intent of the suggestion would consider that the entire protection system has to operate in order to maintain the reliability of the BES. An example would be if the protective relay and associated communications were on a UPS system and the intended device to operate were on station batteries, this would be the best case scenario as the Micro processors relays and the newer associated communications do not like the voltage drop when the station switches to the station batteries, hence the use of UPS options. Micro processors relays do have internal battery backup to keep them up and running, though a maintenance task would have to be included to be sure that they are properly maintained and tested, so the UPS option is easier and has been kind of an industry standard in the past. In the end the UPS would have to be on a maintenance schedule also.
Response: The SDT appreciates your support. The SDT believes the current draft of the definition as balloted is clear, concise, and supported by industry. The term “non-battery-based dc supply” is meant to be a broad term to capture other methods such as flywheels, compressed air, fuel cells, or any other emerging technology which is capable of supplying dc power to the Protection System.				

NERC
NORTH AMERICAN ELECTRIC RELIABILITY CORPORATION

Consideration of Comments on Protection System Maintenance & Testing — Project 2007-17 – Definition of Protection System

The Protection System Maintenance & Testing Standard Drafting Team thanks all commenters who submitted comments for the revised definition of "Protection System."

The revised definition was posted for a 30-day public comment period from September 13, 2010 through October 12, 2010. Stakeholders were asked to provide feedback on the definition through a special Electronic Comment Form. There were 27 sets of comments, including comments from more than 62 different people from approximately 53 companies representing 7 of the 10 Industry Segments as shown in the table on the following pages.

http://www.nerc.com/filez/standards/Protection_System_Maintenance_Project_2007-17.html

While several commenters made suggestions to further refine the definition of Protection System, the team did not make any additional changes to the definition based on stakeholder comments. The team did, however remove the proposed modification to PER-005 from the implementation plan. No other changes were made.

- Some commenters made suggestions for modifications to various portions of the proposed definition of Protection System. There was no commonality to the proposed revisions and these modifications did not seem to provide greater clarity than was provided with the last version of the proposed definition posted for comment and ballot. Since most stakeholders agreed with the latest version of the proposed definition, no changes were made to the definition.
- Several commenters questioned the applicability of the defined term "Protection System" in PER-005; the SDT agreed and modified the Implementation Plan for the definition of Protection System to remove the reference to PER-005.
- Several commenters also used the comment period as a forum to show displeasure with the NERC and regional BES definitions. Making modifications to the definition of BES is outside the scope of work assigned to this drafting team.

If you feel that your comment has been overlooked, please let us know immediately. Our goal is to give every comment serious consideration in this process! If you feel there has been an error or omission, you can contact the Vice President and Director of Standards, Herb Schrayshuen, at 609-452-8060 or at herb.schrayshuen@nerc.net. In addition, there is a NERC Reliability Standards Appeals Process.[1]

[1] The appeals process is in the Reliability Standards Development Procedures: http://www.nerc.com/standards/newstandardsprocess.html.

Index to Questions, Comments, and Responses

1. Do you agree with the proposed definition of "Protection System?" If not, please provide specific suggestions for improvement..... 8

The Industry Segments are:

1 — Transmission Owners
2 — RTOs, ISOs
3 — Load-serving Entities
4 — Transmission-dependent Utilities
5 — Electric Generators
6 — Electricity Brokers, Aggregators, and Marketers
7 — Large Electricity End Users
8 — Small Electricity End Users
9 — Federal, State, Provincial Regulatory or other Government Entities
10 — Regional Reliability Organizations, Regional Entities

Group/Individual		Commenter	Organization	Registered Ballot Body Segment									
				1	2	3	4	5	6	7	8	9	10
1.	Group	Mallory Huggins	NERC Staff										

Additional Member	Additional Organization	Region	Segment Selection
1.	Phil Tatro	NERC	NA - Not Applicable NA
2.	Bob Cummings	NERC	NA - Not Applicable NA

Additional Member	Additional Organization	Region	Segment Selection
1.	Phil Tatro	NERC	NA - Not Applicable NA
2.	Bob Cummings	NERC	NA - Not Applicable NA

2.	Group	Guy Zito	Northeast Power Coordinating Council										X

Additional Member	Additional Organization	Region	Segment Selection
1.	Alan Adamson	New York State Reliability Council, LLC	NPCC 10
2.	Gregory Campoli	New York Independent System Operator	NPCC 2

Group/Individual		Commenter	Organization		Registered Ballot Body Segment									
					1	2	3	4	5	6	7	8	9	10
3.		Kurtis Chong	Independent Electricity System Operator	NPCC	2									
4.		Sylvain Clermont	Hydro-Quebec TransEnergie	NPCC	1									
5.		Chris de Graffenried	Consolidated Edison Co. of New York, Inc.	NPCC	1									
6.		Gerry Dunbar	Northeast Power Coordinating Council	NPCC	10									
7.		Dean Ellis	Dynegy Generation	NPCC	5									
8.		Brian Evans-Mongeon	Utility Services	NPCC	8									
9.		Mike Garton	Dominion Resources Services, Inc.	NPCC	5									
10.		Brian L. Gooder	Ontario Power Generation Incorporated	NPCC	5									
11.		Kathleen Goodman	ISO - New England	NPCC	2									
12.		Chantel Haswell	FPL Group, Inc.	NPCC	5									
13.		David Kiguel	Hydro One Networks Inc.	NPCC	1									
14.		Michael R. Lombardi	Northeast Utilities	NPCC	1									
15.		Randy MacDonald	New Brunswick System Operator	NPCC	2									
16.		Bruce Metruck	New York Power Authority	NPCC	6									
17.		Lee Pedowicz	Northeast Power Coordinating Council	NPCC	10									
18.		Robert Pellegrini	The United Illuminating Company	NPCC	1									
19.		Si Truc Phan	Hydro-Quebec TransEnergie	NPCC	1									
20.		Saurabh Saksena	National Grid	NPCC	1									
21.		Michael Schiavone	National Grid	NPCC	1									
22.		Peter Yost	Consolidated Edison Co. of New York, Inc.	NPCC	3									
3.	Group	Denise Koehn	Bonneville Power Administration		X		X		X	X				
Additional Member		**Additional Organization**	**Region**	**Segment Selection**										
1.		Dean Bender	BPA, Transmission SPC Technical Svcs	WECC	1									

Group/Individual		Commenter	Organization	Registered Ballot Body Segment									
				1	2	3	4	5	6	7	8	9	10
4.	Group	Steve Rueckert	WECC										X

	Additional Member	Additional Organization	Region	Segment Selection
1.	Mary Rieger	WECC	WECC	10
2.	John McGee	WECC	WECC	10

5.	Group	Ben Li	IRC Standards Review Committee		x								

	Additional Member	Additional Organization	Region	Segment Selection
1.	Matt Goldberg	ISO-NE	NPCC	2
2.	Charles Yeung	SPP	SPP	2
3.	Bill Phillips	MISO	MRO	2
4.	Greg Van Pelt	CAISO	WECC	2
5.	Patrick Brown	PJM	RFC	2
6.	Steve Myers	ERCOT	ERCOT	2
7.	Mark Thompson	AESO	WECC	2
8.	James Castle	NYISO	NPCC	2

6.	Group	Michael Gammon	Kansas City Power & Light	x		x		x	x				

	Additional Member	Additional Organization	Region	Segment Selection
1.	Todd Moore	KCPL	SPP	1, 3, 5, 6

7.	Individual	Jana Van Ness	Arizona Public Service Company	x		x		x	x				
8.	Individual	James Stanton	SPS Consulting Group Inc.								X		
9.	Individual	Martin Bauer	US Bureau of Reclamation					X					
10.	Individual	Karl Bryan	US Army Corps of Engineers	X				X					

Group/Individual		Commenter	Organization	Registered Ballot Body Segment									
				1	2	3	4	5	6	7	8	9	10
11.	Individual	Kirit S. Shah	Ameren	X		X		X	X				
12.	Individual	Greg Froehling	Green Country Energy					X					
13.	Individual	Dan Roethemeyer	Dynegy Inc.					X					
14.	Individual	Paul Rocha	CenterPoint Energy	X									
15.	Individual	Robert Ganley	LIPA	X									
16.	Individual	Andrew Z. Pusztai	American Transmission Company	X									
17.	Individual	Thad Ness	American Electric Power (AEP)	X		X		X	X				
18.	Individual	Kasia Mihalchuk	Manitoba Hydro	X		X		X	X				
19.	Individual	Kathleen Goodman	ISO New England Inc.		X								
20.	Individual	Patti Metro	NRECA	X		X							
21.	Individual	RoLynda Shumpert	South Carolina Electric and Gas	X		X		X	X				
22.	Individual	Terry Harbour	MidAmerican Energy	X									
23.	Individual	Michael Lombardi	Northeast Utilities	X		X		X					
24.	Individual	Dan Rochester	Independent Electricity System Operator		X								
25.	Individual	Jason L. Marshall	Midwest ISO		X								

Group/Individual		Commenter	Organization	Registered Ballot Body Segment									
				1	2	3	4	5	6	7	8	9	10
26.	Individual	Greg Rowland	Duke Energy	X		X		X	X				
27.	Individual	Alice Murdock Ireland	Xcel Energy	X		X		X	X				

1. Do you agree with the proposed definition of "Protection System?" If not, please provide specific suggestions for improvement.

Summary Consideration: Numerous commenters confused the definition with its applicability in various standards. Other commenters made suggestions to modify various portions of the definition. No changes were made to the definition in response to these comments. Several commenters questioned the applicability of the defined term "Protection System" in PER-005; the SDT agreed and modified the Implementation Plan for the definition of Protection System to remove the reference to PER-005. Several commenters also used the comment period as a forum to show displeasure with the NERC and regional BES definitions. Making changes to the definition of Bulk Electric System is outside the scope of work assigned to this drafting team.

Organization	Yes or No	Question 1 Comment
NERC Staff	No	NERC staff does not support the phrase "voltage and current sensing devices providing input to protective relays." While no version of the definition has been all-inclusive with respect to this phrase, we believe that the best phrase would be a combination of several drafts and should state the following: "voltage and current sensing devices and associated circuitry from the voltage and current sensing devices to the protective relay inputs." As currently written, the definition represents a step backward from the language in the previous definition ("voltage and current sensing inputs to protective relays and associated circuitry from the voltage and current sensing devices") and should be modified.
Response: Thank you for your comment. The SDT believes the current draft of the definition as balloted is better supported by industry.		
Northeast Power Coordinating Council	No	This project addresses the definition of a Protection System. However, an ongoing issue that needs to be addressed is clarification of when a Bulk Electric System transmission Protection System applies to a Distribution Provider. An example would be for a tee-tap off a Bulk Power System 345kV line to a step down transformer supplying distribution--would the relaying on the low side of the transformer be expected to comply with the requirements of PRC-005-2? Would the protection system configuration be considered a Protection System? Will this issue be addressed within the scope of Project 2007-17?
Response: Thank you for your comment. The SDT believes these questions are not within the scope of Project 2007-17 and should be addressed by the Regional Entities.		
WECC		The definition is generally acceptable. However, we believe that better language for the third bullet is as follows: DC supply sources affecting the "Protection System" (including station batteries, battery chargers, and non-battery-based dc supply), and...A definition of non-battery-based dc supply should be included to avoid confusion and we offer the following: The inverter or rectifier in the circuit, dependent upon how the end use quipment is designed. Uninterruptible power supply (UPS) such as on-line, line-interactive or standby that some of the protection system could be on. The intent of the suggestion would consider that the entire protection system has to operate in order to maintain the reliability of the BES. An example would be if the protective relay

Organization	Yes or No	Question 1 Comment
		and associated communications were on a UPS system and the intended device to operate were on station batteries, this would be the best case scenario as the Micro processors relays and the newer associated communications do not like the voltage drop when the station switches to the station batteries, hence the use of UPS options. Micro processors relays do have internal battery backup to keep them up and running, though a maintenance task would have to be included to be sure that they are properly maintained and tested, so the UPS option is easier and has been “kind of” an industry standard in the past. In the end the UPS would have to be on a maintenance schedule also.
Response: Thank you for your comment. The SDT believes the current draft of the definition as balloted is better supported by industry. The term “non-battery-based dc supply” is meant to be a broad term to capture other methods such as flywheels, compressed air, fuel cells, or any other emerging technology which is capable of supplying dc power to the Protection System.		
Kansas City Power & Light	No	The phrase, "non-battery-based dc supply" is ambiguous and not well defined. It is critical this definition be clear in its intent and not introduce confusion to allow maintenance programs to be effective. Recommend this phrase either needs additional definition or should be considered for removal.
Response: Thank you for your comment. The SDT believes the language is clear and supported by industry. The term “non-battery-based dc supply” is meant to be a broad term to capture other methods such as flywheels, compressed air, fuel cells, or any other emerging technology which is capable of supplying dc power to the Protection System.		
SPS Consulting Group Inc.	No	The revised definition perpetuates the confusion over "communications systems" embedded or otherwise associated with Protection Systems. The term "communications components" is more accurate.
Response: Thank you for your comment. The SDT believes the language is clear and addresses relay communication systems currently used by industry.		
US Bureau of Reclamation	No	The term "protection functions" is ambiguous as it is not related to the protection function associated with the protective relays. There are other protection functions not associated with protective relays that respond to electrical quantities. The language for Communication systems should be changed to remove the ambiguity. The following change would be clear, "Communication system necessary for the correct operation of the protective relays" The input to the relays is from voltage and current sensing devices through their respective circuits. Since the definition for protective relays separates the term "control circuitry" associated with protective relays, it is clear that protective relays do not also include the "control circuitry". By the same token, voltage and current sensing devices do not include their related circuits. The definition for voltage and current sensing devices should be revised to include the term "circuits". The following language change would serve make it clear: "Voltage and current sensing devices and their respective circuits providing inputs protective relays".
Response: Thank you for your comment. The SDT believes the current draft of the definition as balloted is clear, concise, and supported by industry.		
US Army Corps of Engineers	No	The use of the term "protection functions" is not a defined NERC term and either the term should be defined or it should not be used. At best the term is ambiguous and could lead to scope growth by auditors. Recommend

Organization	Yes or No	Question 1 Comment
		that the following changes be made: "Communication system necessary for the correct operation of the protective relays." "Control circuitry associated with protective relays through the trip coil(s) of the circuit breaker or other interrupting device." See the next paragraph for the proposed correction to the DC Supply part of the definition. The input to the relay is from voltage and current sensing devices yet there is no mention of the associated circuits. The same can be said about the station DC supply circuits. The definition should apply to the circuits providing inputs or control power to the protective relays and from the output of the relays to the tripping coils of the circuit breaker. Recommend the following: "Voltage and current sensing devices and their respective circuits providing inputs to the protective relays." "Station DC supply associated with protective relays (including station batteries, battery charger, non-battery-based DC supply circuitry to the protective relays and from the relay to the trip coil(s)of the circuit breaker), and"
Response: Thank you for your comment. The SDT believes the current draft of the definition as balloted is clear, concise, and supported by industry.		
Dynegy Inc.	No	The majority of the definition is good; however, the term "non-battery-based dc supply' is still somewhat vague. Can you please further define or provide some examples?
Response: Thank you for your comment. The SDT believes the language is clear and supported by industry. The term "non-battery-based dc supply" is meant to be a broad term to capture other methods such as flywheels, compressed air, fuel cells, or any other emerging technology which is capable of supplying dc power to the Protection System.		
CenterPoint Energy	No	(a) CenterPoint Energy believes the proposed re-definition of "Protection System" is technically incorrect due to the inclusion of trip coils as part of the control circuitry. A protection system has correctly performed its function if it provides tripping voltage up to the terminals of trip coils. From that point, the circuit breaker can fail to timely interrupt fault current due to several factors, such as a binding mechanism, stuck mechanism, broken pull rod, bad insulating medium, or bad trip coils. Local breaker failure protection, or remote backup protection, is installed to address the various possible causes of circuit breaker failure. The proposed re-definition of "Protection System" should be revised to indicate control circuitry associated with protective functions UP TO THE TERMINALS OF the trip coil(s) of the circuit breakers or other interrupting devices. (b) On the surface, the proposed re-definition of "Protection System" appears mainly applicable to PRC-005 based upon the Standards Announcement and proposed Implementation Plan. However, NERC standard PRC-004-1 Analysis and Mitigation of Transmission and Generation Protection System Misoperations also uses the capitalized term "Protection System". CenterPoint Energy believes it is inappropriate to require reporting of Misoperations of transmission Protection Systems and generator Protection Systems for bad trip coils within a circuit breaker. For application to PRC-004-1, CenterPoint Energy recommends revising the proposed re-definition to indicate control circuitry associated with protective functions UP TO THE TERMINALS OF the trip coil(s) of the circuit breakers or other interrupting devices.
Response: Thank you for your comment. The SDT believes the current draft of the definition as balloted is better supported by industry.		
Midwest ISO	No	We have an issue with the implementation plan. The implementation plan proposes to capitalize the term

Organization	Yes or No	Question 1 Comment
		"protection system" in NUC-001-2, PER-005-1, and PRC-001-1. We disagree with capitalizing the term because protection system was a defined term when these standards were written. Thus, if the drafting teams of those standards intended for the definition in the NERC glossary of terms to apply, they would have capitalized the term. Furthermore, capitalizing the term may fundamentally alter the meaning of the standard. For PER-005-1, we believe the standard is altered because protection system as used in this standard actually refers to special protection system or remedial action schemes.
Response: Thank you for your comment. The SDT agrees and will revise the Implementation Plan to remove PER-005 from the list of standards to be modified. However, the SDT believes the term Protection System should be capitalized as described in the Implementation Plan for NUC-001-2 and PRC-001-1.		
American Electric Power (AEP)	No	1. This change in definition needs to occur concurrently with other related projects (PRC-005-2). Neither the SDT nor the SC should establish a practice of making changes to definitions outside the parameters of changes to standards. This will introduce opportunities for confusion and does not provide the appropriate signals to the Registered Entities to adjust their programs and make the appropriate changes. If this has to be done faster than the pace of the current PRC-005-2 project, we suggest it still be paired with that project, but a smaller scope be considered to allow for this to pass quickly as possible and then the remaining work can be accomplished in PRC-005-3. 2. We suggest that the SDT consider the creation of sub-definitions opposed to crafting a single term for complex and diverse components that could make up the Protection System. As it stands, AEP cannot support this as it still does not remove the degree of ambiguity that could result in interpretation challenges during later enforcement and monitoring activities. We understand the urgency to make progress; however, the deliverables of this team can have significant collateral impacts in the compliance process. 3. The bullet for Protective relays should be further clarified with the addition of applied on or designed to provide protection for the BES that responds to the electrical fault or disturbance conditions. 4. Below are the comments that were provided in the second draft that were not adequately addressed in the consideration of the comments. A. The definition as drafted includes "Station dc supply." While this appears reasonable and innocuous, the term is unclear and could be construed by an auditor to include a lot of equipment and infrastructure not intended by the PSMT SDT. For example, station battery chargers are typically supplied by station auxiliary power transformers, which in turn are supplied by primary-voltage bus work, primary-voltage fuses, or primary-voltage circuit breakers. An auditor for either PRC-005 or any other Standard referencing "Protection System" could read that such primary-voltage equipment is part of the Protection System and therefore subject to certain requirements in either PRC-005 or any other Standard referencing Protection System. B. The definition as drafted includes "Communications systems necessary. . . ". Once again, this term appears innocuous, but it is actually unclear. For example, if a transfer-trip channel is carried on a microwave path, an auditor may decide that the entire microwave equipment, microwave building battery, and microwave building emergency generator are all part of the Protection System, and thus subject to requirements in either PRC-005 or other existing or future Standards that refer to Protection System. AEP

Organization	Yes or No	Question 1 Comment
		recommends that the term be phrased "communications paths" opposed to "communications systems". C. Similar to the above two items, we are concerned about the inclusion of voltage and current-sensing "devices" in the Definition. As written, applicability can be inferred to the entire device and not merely its output quantities, not only for this Standard but any other that references a Protection System. AEP recommends the phrase "circuitry from voltage and current-sensing devices providing inputs to protective relays" instead of "voltage and current-sensing devices providing inputs to protective relays."
Response: When the Board of Trustees was asked to approve an interpretation of PRC-005-1 that was written by the PSMT SDT, the board acknowledged the reliability gap identified by the drafting team caused by the definition of "protection system" and directed that work to close this reliability gap should be given "priority." To close this reliability gap the BOT has directed that revised definition be applied to PRC-005-1 as soon as practical - not years from now. The implementation plan now proposes at least 12 months for entities to apply the new definition to PRC-005-1, and that should give entities time to apply the new definition to PRC-005-1. **2. The SDT believes the current draft of the definition as balloted is clear, concise, and supported by industry.** **3. The SDT believes these questions are not within the scope of Project 2007-17 and should be addressed by the Regional Entities.** **4A. The SDT believes the current draft of the definition as balloted is clear, concise, and supported by industry. The definition of Protection System with regards to dc supply has been modified and now reads:** Station dc supply associated with protective functions (including station batteries, battery chargers, and non-battery-based dc supply). **4B. The SDT believes your comment pertains to standards and requirements, and not the definition of Protection System.** **4C. The SDT believes the current draft of the definition as balloted is better supported by industry.**		
Independent Electricity System Operator	No	While we agree with the definition itself, we do have a concern about its application. An ongoing issue that needs to be addressed is clarification of when a Bulk Electric System transmission Protection System applies to a Distribution Provider. This was addressed in part in the interpretation request regarding transmission Protection Systems, Project 2009-17. An example would be for a tee-tap off a Bulk Power System 345kV line to a step down transformer supplying distribution -- would the relaying on the low voltage side of the transformer be expected to comply with the requirements of PRC-005-2? Would the protection system configuration be considered a Protection System? Will this issue be addressed within the scope of Project 2007-17?
Response: Thank you for your comment. This clarification is provided in each requirement that uses the term, "Protection System" by identifying the responsible entity. The question relates to "application" of the definition, not to the definition."		
NRECA		My comment is related to the Implementation plan which will modify the PER-005. I am specifically concerned with changing in R3.1 "established operating guides or "protection systems" to mitigate IROL violations" to "established operating guides or "Protection Systems" to mitigate IROL violations". This modification changes the intent of requirement PER-005 R3.1. The requirement was developed by the drafting team to address an Order 693 directive to require the use of simulators by reliability coordinators, transmission operators and balancing authorities that have operational control over a significant portion of load and generation. The System Personnel Training SDT felt that the use of the phrase "established IROLs or has established operating guides

Organization	Yes or No	Question 1 Comment
		or protection systems to mitigate IROL violations" appropriately represents the impact of entities on the reliability of the BES. In the context of PER-005 R3.1, this specific language was used to broadly include anything that an entity utilizes to prevent an IROL which could be an "operating guide or a protection system" like a RAS in WECC or an SPS in the Eastern Interconnection. It was not intended to include all the items included in the term that is being defined in Project 2007-17.
Response: Thank you for your comment. The SDT agrees and will revise the Implementation Plan to remove PER-005 from the list of standards to be modified.		
MidAmerican Energy	No	The drafting team did not properly address previous comments to include BES references in each PRC-005 sub bullet definitions and left "DC system" wording in the definition with only a comment in parentheses. The Protection System definition affects multiple standards and must stand alone across those standards. Therefore: 1. BES references are still needed in each sub bullet definition to eliminate ambiguity and to create clearly auditable requirements, meeting a basic standards drafting principal being requested both by FERC and the industry. 2. "DC system" remains a wide open definition. Because regulators and auditors are auditing to "zero" defect requirements and imposing their own interpretations, only specific wording is acceptable. The term "DC system" needs to be replaced with explicit pieces of equipment such as "batteries, battery chargers, and AC / DC converters". To be a credible audit process, both the auditor and audited entity must have a clear understanding of what is being audited. DC system can be interpreted in many ways by an entity or auditor and is not an acceptable term. Further, BES references are needed to create clear and auditable boundaries for this definition.
Response: Thank you for your comments. These comments all relate to "application" of the definition; "auditable boundaries" and "auditable requirements" are part of the standard.		
Duke Energy	Yes	We agree with the revised definition. However the added language raises a question regarding how PRC-005-2 would be applied to DC supply situations where the battery is the backup to the "normal" source of DC power. Specifically, it's unclear to us that Uninterruptible Power Supplies (UPS), rectifiers and motor-generator sets that use batteries as a backup are included in the scope of Table 1.
Response: Thank you for your comment. The SDT believes your comment pertains to the standard PRC-005-2 and not the definition of Protection Systems.		
Xcel Energy	Yes	The Implementation Plan indicates that the lower case "protection system" in 3 other standards would be replaced with the capitalized term "Protection System" to properly reflect its use in those standards. In PRC-001 the term "protective system" is also used, however the Implementation Plan does not indicate whether this term will also be replaced. If not, then it would seem to imply that the term "protective system" has different meaning than "protection system/Protection System". There is concern that the use of "Protection System" in PRC-001 will require entities to 'coordinate" changes to all elements of the Protection System, which could be of no value for elements such as batteries, battery chargers. It is not clear as to if the intent that ALL elements of the

Organization	Yes or No	Question 1 Comment
		Protection System be coordinated when a new or changed Protection System occurs.
Response: Thank you for your comment. The term "protective system" is not a defined term in the NERC glossary and is not addressed by the Implementation Plan.		
LIPA	Yes	Station dc supply associated with protective functions (including station batteries, battery chargers, and non-battery-based dc supply), and ....Change to Station dc supply associated with protective functions, and....
Response: Thank you for your comment. The SDT believes the current draft of the definition as balloted is better supported by industry.		
American Transmission Company	Yes	None.
Manitoba Hydro	Yes	
ISO New England Inc.	Yes	
South Carolina Electric and Gas	Yes	
Northeast Utilities	Yes	
IRC Standards Review Committee	Yes	
Bonneville Power Administration	Yes	
Arizona Public Service Company	Yes	
Ameren	Yes	
Green Country Energy	Yes	

Proposed Definition of Protection System:

Protection System –

- Protective relays which respond to electrical quantities,
- Communications systems necessary for correct operation of protective functions,
- Voltage and current sensing devices providing inputs to protective relays,
- Station dc supply associated with protective functions (including station batteries, battery chargers, and non-battery-based dc supply), and
- Control circuitry associated with protective functions through the trip coil(s) of the circuit breakers or other interrupting devices.

Protection System Definition

The previously approved (Board of Trustees) definition of Protection System reads as follows:

Protection System: Protective relays, associated communication systems, voltage and current sensing devices, station batteries and DC control circuitry.

Proposed Changes to Board of Trustees Approved Version of Definition:

Protection System: Protective relays which respond to electrical quantities, ~~associated~~ communication systems necessary for correct operation of protective functions, voltage and current sensing devices providing inputs to protective relays, station dc supply associated with protective functions (including station batteries, battery chargers, and non-battery based ~~and DC~~ dc supply), and control circuitry associated with protective functions through the trip coil(s) of the circuit breakers or other interrupting devices.

Implementation Plan for the Revised Definition of Protection System

Prerequisite Approvals or Activities:

The implementation of the revised definition is not dependent upon any other activity.

Recommended Modifications to Already Approved Standards

The non-capitalized version of the term, "protection system" is used in the following approved standards:

- NUC-001-2 – Nuclear Plant Interface Coordination
- PRC-001-1 – System Protection Coordination

The term, "protection system" shall be capitalized where used in these standards when the definition of "Protection System" is approved by applicable regulatory authorities.

Proposed Effective Date:

Each responsible entity (Distribution Provider that owns a transmission Protection System, Transmission Owner, and Generator Owner) shall modify its protection system maintenance and testing program description and basis document(s) (required in Requirement R1 of PRC-005-1 – Transmission and Generation Protection System Maintenance and Testing) as necessary to reflect the modified definition of 'Protection System' by the first day of the first calendar quarter twelve months following regulatory approvals and implement any additional maintenance and testing (required in Requirement R2 of PRC-005-1 – Transmission and Generation Protection System Maintenance and Testing) by the end of the first complete maintenance and testing cycle described in the entity's program description and basis document(s) following establishment of the program changes resulting from the revised definition.

The original definition of "Protection System" shall be retired at the same time the revised definition becomes effective.

Implementation Plan for the Revised Definition of Protection System

Prerequisite Approvals or Activities:

The implementation of the revised definition is not dependent upon any other activity.

Recommended Modifications to Already Approved Standards

The non-capitalized version of the term, "protection system" is used in the following approved standards:

- NUC-001-2 – Nuclear Plant Interface Coordination
- ~~PER-005-1 – System Personnel Training~~
- PRC-001-1 – System Protection Coordination

The term, "protection system" shall be capitalized where used in these standards when the definition of "Protection System" is approved by applicable regulatory authorities.

Proposed Effective Date:

Each responsible entity (Distribution Provider that owns a transmission Protection System, Transmission Owner, and Generator Owner) shall modify its protection system maintenance and testing program description and basis document(s) (required in Requirement R1 of PRC-005-1 – Transmission and Generation Protection System Maintenance and Testing) as necessary to reflect the modified definition of 'Protection System' by the first day of the first calendar quarter twelve months following regulatory approvals and implement any additional maintenance and testing (required in Requirement R2 of PRC-005-1 – Transmission and Generation Protection System Maintenance and Testing) by the end of the first complete maintenance and testing cycle described in the entity's program description and basis document(s) following establishment of the program changes resulting from the revised definition.

The original definition of "Protection System" shall be retired at the same time the revised definition becomes effective.

NERC
NORTH AMERICAN ELECTRIC RELIABILITY CORPORATION

Standards Announcement

Recirculation Ballot Open
November 1-11, 2010

Available at: https://standards.nerc.net/CurrentBallots.aspx

Project 2007-17 Protection System Maintenance Definition

A recirculation ballot period is open through **8 p.m. Eastern on November 11, 2010**.

Instructions

Members of the ballot pool associated with this project may log in and submit their votes from the following page: https://standards.nerc.net/CurrentBallots.aspx

Ballot Process

The Standards Committee encourages all members of the ballot pool to review the consideration of comments submitted during the successive ballot window that ended October 14, 2010 and the consideration of comments submitted during the formal comment period that ended October 12, 2010.

In the recirculation ballot, votes are counted by exception only. If a ballot pool member does not submit a revision to that member's original vote, the vote remains the same as in the first ballot. Members of the ballot pool may:

- Reconsider and change their vote from the first ballot.
- Vote in the second ballot even if they did not vote on the first ballot.
- Take no action if they do not want to change their original vote.

Additional Information

The Standard Processes Manual allows drafting teams to make changes following an initial or successive ballot with a goal of improving the quality of a standard (or definition), provided those changes do not alter the applicability or scope of the proposed standard (or definition). The Protection System Maintenance and Testing drafting team made the following minor edit to the implementation plan for the definition of Protection System:

- Removed PER-005-1 – System Personnel Training from the set of standards with conforming changes associated with the approval of the proposed definition of Protection System

A redline version of the Implementation Plan showing the above change has been posted for stakeholder review.

Next Steps

Voting results will be posted and announced after the ballot window closes. If approved, the definition and associated implementation plan will be submitted to the Board of Trustees.

Project Background

When the Board of Trustees was asked to approve an interpretation of PRC-005-1 that was written by the Protection System and Maintenance Standard Drafting Team, the board acknowledged the reliability gap identified by the drafting team caused by the definition of "protection system," and directed that work to close this reliability gap should be given “priority.” The Standards Committee directed the team to advance the definition of Protection System in parallel with the development of PRC-005-2.

Project Page: http://www.nerc.com/filez/standards/Protection_System_Maintenance_Project_2007-17.html

Standards Process

The Standard Processes Manual contains all the procedures governing the standards development process. The success of the NERC standards development process depends on stakeholder participation. We extend our thanks to all those who participate.

For more information or assistance, please contact Monica Benson, Standards Process Administrator, at monica.benson@nerc.net or at 609.452.8060.

North American Electric Reliability Corporation
116-390 Village Blvd.
Princeton, NJ 08540
609.452.8060 | www.nerc.com

NERC
NORTH AMERICAN ELECTRIC RELIABILITY CORPORATION

Standards Announcement
Recirculation Ballot Results

Now available at: https://standards.nerc.net/Ballots.aspx

Project 2007-17 Ballot Results for Definition of Protection System
The recirculation ballot window to vote on a proposed revision to the definition of the term, “Protection System” and its associated implementation plan closed on November 11, 2010. The ballot pool approved the revised definition and its associated implementation plan. Voting statistics are listed below, and the Ballot Results Web page provides a link to the detailed results:

Quorum: 89.41 %
Approval: 86.83 %

Next Steps
The revised definition and its associated implementation plan will be submitted to the NERC Board of Trustees for approval.

Project Background
When the Board of Trustees was asked to approve an interpretation of PRC-005-1 that was written by the Protection System Maintenance and Testing Standard Drafting Team, the board acknowledged the reliability gap identified by the drafting team caused by the definition of "protection system," and directed that work to close this reliability gap should be given “priority.” The Standards Committee directed the team to advance the definition of Protection System in parallel with the development of PRC-005-2.

Project Page: http://www.nerc.com/filez/standards/Protection_System_Maintenance_Project_2007-17.html

Ballot Criteria
Approval requires both a (1) quorum, which is established by at least 75% of the members of the ballot pool for submitting either an affirmative vote, a negative vote, or an abstention, and (2) a two-thirds majority of the weighted segment votes cast must be affirmative; the number of votes cast is the sum of affirmative and negative votes, excluding abstentions and non-responses.

Standards Process
The Standard Processes Manual contains all the procedures governing the standards development process. The success of the NERC standards development process depends on stakeholder participation. We extend our thanks to all those who participate.

For more information or assistance, please contact Monica Benson, Standards Process Administrator, at monica.benson@nerc.net or at 609.452.8060.

North American Electric Reliability Corporation
116-390 Village Blvd.
Princeton, NJ 08540
609.452.8060 | www.nerc.com

User Name

Password

Log in

Register

-Ballot Pools
-Current Ballots
-Ballot Results
-Registered Ballot Body
-Proxy Voters

Home Page

Ballot Results

Ballot Name:	Project 2007-17 Protection System Maintenance (Protection System definition)_rc
Ballot Period:	11/1/2010 - 11/11/2010
Ballot Type:	recirculation
Total # Votes:	287
Total Ballot Pool:	321
Quorum:	**89.41 % The Quorum has been reached**
Weighted Segment Vote:	86.83 %
Ballot Results:	**The Standard has Passed**

Summary of Ballot Results

Segment	Ballot Pool	Segment Weight	Affirmative # Votes	Affirmative Fraction	Negative # Votes	Negative Fraction	Abstain # Votes	No Vote
1 - Segment 1.	89	1	65	0.855	11	0.145	5	8
2 - Segment 2.	9	0.5	5	0.5	0	0	1	3
3 - Segment 3.	71	1	56	0.903	6	0.097	2	7
4 - Segment 4.	24	1	19	0.905	2	0.095	1	2
5 - Segment 5.	67	1	40	0.741	14	0.259	6	7
6 - Segment 6.	37	1	28	0.848	5	0.152	1	3
7 - Segment 7.	0	0	0	0	0	0	0	0
8 - Segment 8.	11	0.8	6	0.6	2	0.2	1	2
9 - Segment 9.	6	0.4	4	0.4	0	0	1	1
10 - Segment 10.	7	0.5	5	0.5	0	0	1	1
Totals	**321**	**7.2**	**228**	**6.252**	**40**	**0.948**	**19**	**34**

Individual Ballot Pool Results

Segment	Organization	Member	Ballot	Comments
1	Allegheny Power	Rodney Phillips	Affirmative	
1	Ameren Services	Kirit S. Shah	Negative	View
1	American Electric Power	Paul B. Johnson	Negative	View
1	American Transmission Company, LLC	Jason Shaver	Affirmative	View
1	Arizona Public Service Co.	Robert D Smith	Affirmative	
1	Associated Electric Cooperative, Inc.	John Bussman	Affirmative	
1	Avista Corp.	Scott Kinney		

1	Baltimore Gas & Electric Company	John J. Moraski	Abstain	View
1	BC Transmission Corporation	Gordon Rawlings	Affirmative	
1	Beaches Energy Services	Joseph S. Stonecipher	Affirmative	
1	Black Hills Corp	Eric Egge		
1	Bonneville Power Administration	Donald S. Watkins	Affirmative	
1	CenterPoint Energy	Paul Rocha	Negative	
1	Central Maine Power Company	Brian Conroy	Affirmative	
1	City of Vero Beach	Randall McCamish	Affirmative	
1	City Utilities of Springfield, Missouri	Jeff Knottek	Affirmative	
1	Clark Public Utilities	Jack Stamper	Affirmative	
1	Cleco Power LLC	Danny McDaniel	Affirmative	
1	Colorado Springs Utilities	Paul Morland	Negative	View
1	Commonwealth Edison Co.	Daniel Brotzman	Affirmative	
1	Consolidated Edison Co. of New York	Christopher L de Graffenried	Affirmative	
1	Dairyland Power Coop.	Robert W. Roddy	Negative	
1	Dayton Power & Light Co.	Hertzel Shamash	Affirmative	
1	Deseret Power	James Tucker	Affirmative	
1	Dominion Virginia Power	John K Loftis	Affirmative	
1	Duke Energy Carolina	Douglas E. Hils	Affirmative	
1	East Kentucky Power Coop.	George S. Carruba	Affirmative	
1	Empire District Electric Co.	Ralph Frederick Meyer	Affirmative	
1	Entergy Corporation	George R. Bartlett	Affirmative	
1	FirstEnergy Energy Delivery	Robert Martinko	Affirmative	View
1	Florida Keys Electric Cooperative Assoc.	Dennis Minton	Affirmative	
1	Gainesville Regional Utilities	Luther E. Fair	Affirmative	
1	GDS Associates, Inc.	Claudiu Cadar	Negative	View
1	Georgia Transmission Corporation	Harold Taylor, II	Affirmative	
1	Great River Energy	Gordon Pietsch	Affirmative	
1	Hydro One Networks, Inc.	Ajay Garg	Affirmative	
1	Idaho Power Company	Ronald D. Schellberg	Affirmative	
1	International Transmission Company Holdings Corp	Michael Moltane		
1	Kansas City Power & Light Co.	Michael Gammon	Negative	View
1	Keys Energy Services	Stan T. Rzad	Affirmative	
1	Lake Worth Utilities	Walt Gill	Affirmative	
1	Lakeland Electric	Larry E Watt	Affirmative	
1	Lincoln Electric System	Doug Bantam	Affirmative	
1	Long Island Power Authority	Robert Ganley	Affirmative	
1	Lower Colorado River Authority	Martyn Turner	Affirmative	
1	Manitoba Hydro	Michelle Rheault	Affirmative	
1	Metropolitan Water District of Southern California	Ernest Hahn	Abstain	
1	MidAmerican Energy Co.	Terry Harbour	Affirmative	
1	Minnesota Power, Inc.	Randi Woodward	Affirmative	
1	National Grid	Saurabh Saksena	Affirmative	
1	Nebraska Public Power District	Richard L. Koch	Affirmative	View
1	New York Power Authority	Arnold J. Schuff		
1	Northeast Utilities	David H. Boguslawski	Affirmative	
1	NorthWestern Energy	John Canavan	Affirmative	
1	Ohio Valley Electric Corp.	Robert Mattey	Negative	View
1	Oklahoma Gas and Electric Co.	Marvin E VanBebber	Abstain	
1	Omaha Public Power District	Douglas G Peterchuck	Affirmative	
1	Orlando Utilities Commission	Brad Chase	Affirmative	
1	Otter Tail Power Company	Lawrence R. Larson		
1	Pacific Gas and Electric Company	Chifong L. Thomas	Negative	View
1	PacifiCorp	Mark Sampson		
1	PECO Energy	Ronald Schloendorn	Affirmative	
1	Platte River Power Authority	John C. Collins	Affirmative	
1	Potomac Electric Power Co.	Richard J Kafka	Affirmative	
1	PowerSouth Energy Cooperative	Larry D. Avery	Affirmative	
1	PPL Electric Utilities Corp.	Brenda L Truhe	Affirmative	
1	Public Service Company of New Mexico	Laurie Williams	Abstain	
1	Public Service Electric and Gas Co.	Kenneth D. Brown	Affirmative	
1	Public Utility District No. 1 of Chelan County	Chad Bowman	Affirmative	
1	Puget Sound Energy, Inc.	Catherine Koch	Affirmative	
1	Sacramento Municipal Utility District	Tim Kelley	Affirmative	
1	Salt River Project	Robert Kondziolka	Affirmative	

1	Santee Cooper	Terry L. Blackwell	Affirmative	
1	SCE&G	Henry Delk, Jr.	Affirmative	
1	Seattle City Light	Pawel Krupa	Affirmative	View
1	South Texas Electric Cooperative	Richard McLeon	Affirmative	
1	Southern California Edison Co.	Dana Cabbell	Affirmative	
1	Southern Company Services, Inc.	Horace Stephen Williamson	Affirmative	
1	Southern Illinois Power Coop.	William G. Hutchison		
1	Southwest Transmission Cooperative, Inc.	James L. Jones	Abstain	
1	Southwestern Power Administration	Gary W Cox	Affirmative	
1	Sunflower Electric Power Corporation	Noman Lee Williams	Affirmative	
1	Tennessee Valley Authority	Larry Akens	Affirmative	
1	Tri-State G & T Association, Inc.	Keith V. Carman	Negative	View
1	Tucson Electric Power Co.	John Tolo		
1	United Illuminating Co.	Jonathan Appelbaum	Affirmative	
1	Westar Energy	Allen Klassen	Affirmative	
1	Western Area Power Administration	Brandy A Dunn	Negative	View
1	Xcel Energy, Inc.	Gregory L Pieper	Affirmative	
2	Alberta Electric System Operator	Mark B Thompson	Affirmative	
2	BC Transmission Corporation	Faramarz Amjadi		
2	Electric Reliability Council of Texas, Inc.	Chuck B Manning	Abstain	
2	Independent Electricity System Operator	Kim Warren	Affirmative	
2	ISO New England, Inc.	Kathleen Goodman	Affirmative	
2	Midwest ISO, Inc.	Jason L Marshall	Affirmative	View
2	New York Independent System Operator	Gregory Campoli		
2	PJM Interconnection, L.L.C.	Tom Bowe		
2	Southwest Power Pool	Charles H Yeung	Affirmative	
3	Alabama Power Company	Richard J. Mandes	Affirmative	
3	Allegheny Power	Bob Reeping	Affirmative	
3	Ameren Services	Mark Peters	Affirmative	
3	American Electric Power	Raj Rana		
3	Arizona Public Service Co.	Thomas R. Glock		
3	Atlantic City Electric Company	James V. Petrella	Affirmative	
3	BC Hydro and Power Authority	Pat G. Harrington	Affirmative	
3	Bonneville Power Administration	Rebecca Berdahl	Affirmative	
3	Central Lincoln PUD	Steve Alexanderson	Affirmative	
3	City of Bartow, Florida	Matt Culverhouse	Affirmative	
3	City of Clewiston	Lynne Mila	Affirmative	
3	City of Farmington	Linda R. Jacobson	Abstain	
3	City of Green Cove Springs	Gregg R Griffin	Affirmative	
3	City of Leesburg	Phil Janik	Affirmative	
3	ComEd	Bruce Krawczyk	Affirmative	
3	Consolidated Edison Co. of New York	Peter T Yost	Affirmative	
3	Consumers Energy	David A. Lapinski	Negative	View
3	Cowlitz County PUD	Russell A Noble	Affirmative	
3	Delmarva Power & Light Co.	Michael R. Mayer	Affirmative	
3	Detroit Edison Company	Kent Kujala	Affirmative	
3	Dominion Resources Services	Michael F Gildea	Abstain	
3	Duke Energy Carolina	Henry Ernst-Jr	Affirmative	
3	East Kentucky Power Coop.	Sally Witt	Affirmative	
3	Entergy	Joel T Plessinger	Affirmative	
3	FirstEnergy Solutions	Kevin Querry	Affirmative	View
3	Florida Power Corporation	Lee Schuster	Affirmative	
3	Gainesville Regional Utilities	Kenneth Simmons	Affirmative	
3	Georgia Power Company	Anthony L Wilson	Affirmative	
3	Georgia System Operations Corporation	R Scott S. Barfield-McGinnis	Affirmative	
3	Great River Energy	Sam Kokkinen	Affirmative	
3	Gulf Power Company	Gwen S Frazier	Affirmative	
3	Hydro One Networks, Inc.	Michael D. Penstone	Affirmative	
3	JEA	Garry Baker		
3	Kansas City Power & Light Co.	Charles Locke	Negative	View
3	Kissimmee Utility Authority	Gregory David Woessner	Affirmative	
3	Lakeland Electric	Mace Hunter	Affirmative	
3	Lincoln Electric System	Bruce Merrill	Affirmative	
3	Los Angeles Department of Water & Power	Kenneth Silver		
3	Louisville Gas and Electric Co.	Charles A. Freibert	Affirmative	
3	Manitoba Hydro	Greg C Parent	Affirmative	
3	MEAG Power	Steven Grego	Affirmative	

3	MidAmerican Energy Co.	Thomas C. Mielnik	Negative	View
3	Mississippi Power	Don Horsley	Affirmative	
3	Municipal Electric Authority of Georgia	Steven M. Jackson	Affirmative	
3	Muscatine Power & Water	John S Bos	Affirmative	
3	New York Power Authority	Marilyn Brown		
3	Niagara Mohawk (National Grid Company)	Michael Schiavone	Affirmative	
3	Northern Indiana Public Service Co.	William SeDoris	Affirmative	
3	Ocala Electric Utility	David T. Anderson	Affirmative	
3	Orlando Utilities Commission	Ballard Keith Mutters	Affirmative	
3	PacifiCorp	John Apperson	Affirmative	
3	PECO Energy an Exelon Co.	Vincent J. Catania	Affirmative	
3	Platte River Power Authority	Terry L Baker	Affirmative	
3	Potomac Electric Power Co.	Robert Reuter	Affirmative	
3	Progress Energy Carolinas	Sam Waters	Affirmative	
3	Public Service Electric and Gas Co.	Jeffrey Mueller	Affirmative	
3	Public Utility District No. 1 of Chelan County	Kenneth R. Johnson	Affirmative	
3	Public Utility District No. 2 of Grant County	Greg Lange	Negative	
3	Sacramento Municipal Utility District	James Leigh-Kendall	Affirmative	
3	Salem Electric	Anthony Schacher	Affirmative	
3	Salt River Project	John T. Underhill	Affirmative	
3	San Diego Gas & Electric	Scott Peterson	Affirmative	View
3	Santee Cooper	Zack Dusenbury	Affirmative	
3	Seattle City Light	Dana Wheelock	Affirmative	View
3	Southern California Edison Co.	David Schiada	Affirmative	
3	Springfield Utility Board	Jeff Nelson	Affirmative	
3	Tampa Electric Co.	Ronald L Donahey		
3	Tri-State G & T Association, Inc.	Janelle Marriott	Negative	View
3	Wisconsin Electric Power Marketing	James R. Keller	Negative	View
3	Wisconsin Public Service Corp.	Gregory J Le Grave		
3	Xcel Energy, Inc.	Michael Ibold	Affirmative	
4	Alliant Energy Corp. Services, Inc.	Kenneth Goldsmith	Abstain	
4	American Municipal Power - Ohio	Kevin Koloini		
4	American Public Power Association	Allen Mosher	Affirmative	
4	City of Clewiston	Kevin McCarthy	Affirmative	
4	City of New Smyrna Beach Utilities Commission	Timothy Beyrle	Affirmative	
4	Consumers Energy	David Frank Ronk	Negative	View
4	Cowlitz County PUD	Rick Syring	Affirmative	
4	Detroit Edison Company	Daniel Herring	Affirmative	
4	Florida Municipal Power Agency	Frank Gaffney	Affirmative	
4	Fort Pierce Utilities Authority	Thomas W. Richards	Affirmative	
4	Georgia System Operations Corporation	Guy Andrews	Affirmative	
4	Illinois Municipal Electric Agency	Bob C. Thomas	Affirmative	
4	Integrys Energy Group, Inc.	Christopher Plante	Affirmative	
4	Madison Gas and Electric Co.	Joseph G. DePoorter	Affirmative	
4	Ohio Edison Company	Douglas Hohlbaugh	Affirmative	View
4	Old Dominion Electric Coop.	Mark Ringhausen	Affirmative	
4	Public Utility District No. 1 of Douglas County	Henry E. LuBean	Affirmative	
4	Public Utility District No. 1 of Snohomish County	John D. Martinsen	Affirmative	
4	Sacramento Municipal Utility District	Mike Ramirez	Affirmative	
4	Seattle City Light	Hao Li	Affirmative	View
4	Seminole Electric Cooperative, Inc.	Steven R Wallace	Affirmative	
4	South Mississippi Electric Power Association	Steve McElhaney		
4	Wisconsin Energy Corp.	Anthony Jankowski	Negative	View
4	Y-W Electric Association, Inc.	James A Ziebarth	Affirmative	
5	AEP Service Corp.	Brock Ondayko	Negative	View
5	Amerenue	Sam Dwyer	Affirmative	View
5	APS	Mel Jensen	Affirmative	
5	Avista Corp.	Edward F. Groce	Abstain	
5	Black Hills Corp	George Tatar	Abstain	
5	Bonneville Power Administration	Francis J. Halpin	Affirmative	
5	Chelan County Public Utility District #1	John Yale	Affirmative	
5	City of Grand Island	Jeff Mead	Affirmative	
5	City of Tallahassee	Alan Gale	Abstain	
5	City Water, Light & Power of Springfield	Karl E. Kohlrus	Affirmative	
5	Consolidated Edison Co. of New York	Wilket (Jack) Ng	Affirmative	

5	Constellation Power Source Generation, Inc.	Amir Y Hammad	Negative	View
5	Consumers Energy	James B Lewis	Negative	View
5	Cowlitz County PUD	Bob Essex	Affirmative	
5	Dominion Resources, Inc.	Mike Garton	Affirmative	
5	Duke Energy	Robert Smith	Affirmative	
5	Dynegy Inc.	Dan Roethemeyer	Affirmative	View
5	East Kentucky Power Coop.	Stephen Ricker	Affirmative	
5	Energy Northwest - Columbia Generating Station	Doug Ramey	Affirmative	
5	Entegra Power Group, LLC	Kenneth Parker	Affirmative	
5	Entergy Corporation	Stanley M Jaskot	Affirmative	
5	FirstEnergy Solutions	Kenneth Dresner		
5	Florida Municipal Power Agency	David Schumann	Affirmative	
5	Green Country Energy	Greg Froehling	Affirmative	
5	Horizon Wind Energy	Brent Hebert	Affirmative	
5	Indeck Energy Services, Inc.	Rex A Roehl	Negative	View
5	JEA	Donald Gilbert	Abstain	
5	Kansas City Power & Light Co.	Scott Heidtbrink	Negative	View
5	Kissimmee Utility Authority	Mike Blough	Affirmative	
5	Lakeland Electric	Thomas J Trickey	Affirmative	
5	Liberty Electric Power LLC	Daniel Duff	Negative	View
5	Lincoln Electric System	Dennis Florom	Affirmative	
5	Louisville Gas and Electric Co.	Charlie Martin	Affirmative	
5	Luminant Generation Company LLC	Mike Laney	Affirmative	
5	Manitoba Hydro	Mark Aikens		
5	Massachusetts Municipal Wholesale Electric Company	David Gordon	Affirmative	
5	New Harquahala Generating Co. LLC	Nicholas Q Hayes		
5	New York Power Authority	Gerald Mannarino		
5	Northern Indiana Public Service Co.	Michael K Wilkerson	Affirmative	
5	Otter Tail Power Company	Stacie Hebert	Abstain	
5	PacifiCorp	Sandra L. Shaffer	Affirmative	
5	Portland General Electric Co.	Gary L Tingley		
5	PowerSouth Energy Cooperative	Tim Hattaway	Affirmative	
5	PPL Generation LLC	Mark A Heimbach		
5	Progress Energy Carolinas	Wayne Lewis	Affirmative	
5	PSEG Power LLC	David Murray		
5	Public Utility District No. 1 of Lewis County	Steven Grega	Negative	View
5	Reedy Creek Energy Services	Bernie Budnik	Negative	
5	RRI Energy	Thomas J. Bradish	Negative	View
5	Sacramento Municipal Utility District	Bethany Wright	Affirmative	
5	Salt River Project	Glen Reeves	Affirmative	
5	San Diego Gas & Electric	Daniel Baerman	Abstain	
5	Seattle City Light	Michael J. Haynes	Affirmative	View
5	Seminole Electric Cooperative, Inc.	Brenda K. Atkins	Affirmative	
5	South Carolina Electric & Gas Co.	Richard Jones	Affirmative	
5	South Mississippi Electric Power Association	Jerry W Johnson	Affirmative	
5	Southern Company Generation	William D Shultz	Affirmative	
5	Tampa Electric Co.	RJames Rocha	Affirmative	
5	Tenaska, Inc.	Scott M. Helyer	Negative	
5	Tennessee Valley Authority	George T. Ballew	Affirmative	
5	TransAlta Centralia Generation, LLC	Joanna Luong-Tran	Negative	View
5	Tri-State G & T Association, Inc.	Barry Ingold	Negative	
5	U.S. Army Corps of Engineers Northwestern Division	Karl Bryan	Affirmative	
5	U.S. Bureau of Reclamation	Martin Bauer P.E.	Negative	View
5	Wisconsin Electric Power Co.	Linda Horn	Negative	View
5	Wisconsin Public Service Corp.	Leonard Rentmeester	Affirmative	
5	Xcel Energy, Inc.	Liam Noailles	Affirmative	
6	AEP Marketing	Edward P. Cox	Negative	View
6	Ameren Energy Marketing Co.	Jennifer Richardson	Affirmative	
6	Bonneville Power Administration	Brenda S. Anderson	Affirmative	
6	Cleco Power LLC	Matthew D Cripps	Affirmative	
6	Consolidated Edison Co. of New York	Nickesha P Carrol		
6	Constellation Energy Commodities Group	Brenda Powell	Negative	View
6	Dominion Resources, Inc.	Louis S Slade	Affirmative	
6	Duke Energy Carolina	Walter Yeager	Affirmative	
6	Entergy Services, Inc.	Terri F Benoit	Affirmative	

6	Eugene Water & Electric Board	Daniel Mark Bedbury	Affirmative	
6	Exelon Power Team	Pulin Shah	Affirmative	
6	FirstEnergy Solutions	Mark S Travaglianti	Affirmative	View
6	Florida Municipal Power Agency	Richard L. Montgomery	Affirmative	
6	Florida Municipal Power Pool	Thomas E Washburn	Affirmative	
6	Florida Power & Light Co.	Silvia P Mitchell	Affirmative	
6	Great River Energy	Donna Stephenson	Affirmative	
6	Kansas City Power & Light Co.	Jessica L Klinghoffer	Negative	View
6	Lakeland Electric	Paul Shipps	Affirmative	
6	Lincoln Electric System	Eric Ruskamp	Affirmative	
6	Louisville Gas and Electric Co.	Daryn Barker		
6	Luminant Energy	Brad Jones	Affirmative	
6	Manitoba Hydro	Daniel Prowse	Affirmative	
6	New York Power Authority	Thomas Papadopoulos		
6	Northern Indiana Public Service Co.	Joseph O'Brien	Affirmative	
6	Omaha Public Power District	David Ried	Affirmative	
6	OTP Wholesale Marketing	Bruce Glorvigen	Affirmative	
6	Progress Energy	John T Sturgeon	Affirmative	
6	PSEG Energy Resources & Trade LLC	James D. Hebson	Affirmative	
6	Public Utility District No. 1 of Chelan County	Hugh A. Owen	Abstain	
6	RRI Energy	Trent Carlson	Negative	View
6	Santee Cooper	Suzanne Ritter	Affirmative	
6	Seattle City Light	Dennis Sismaet	Affirmative	View
6	Seminole Electric Cooperative, Inc.	Trudy S. Novak	Affirmative	
6	South Carolina Electric & Gas Co.	Matt H Bullard	Affirmative	
6	Tennessee Valley Authority	Marjorie S. Parsons	Affirmative	
6	Western Area Power Administration - UGP Marketing	John Stonebarger	Negative	View
6	Xcel Energy, Inc.	David F. Lemmons	Affirmative	
8		James A Maenner	Affirmative	
8		Roger C Zaklukiewicz	Affirmative	
8		Kristina M. Loudermilk		
8		Merle Ashton	Affirmative	
8	Ascendant Energy Services, LLC	Raymond Tran	Affirmative	
8	JDRJC Associates	Jim D. Cyrulewski	Affirmative	
8	Pacific Northwest Generating Cooperative	Margaret Ryan	Abstain	
8	Power Energy Group LLC	Peggy Abbadini		
8	SPS Consulting Group Inc.	Jim R Stanton	Negative	View
8	Utility Services, Inc.	Brian Evans-Mongeon	Negative	View
8	Volkmann Consulting, Inc.	Terry Volkmann	Affirmative	
9	California Energy Commission	William Mitchell Chamberlain	Affirmative	View
9	Commonwealth of Massachusetts Department of Public Utilities	Donald E. Nelson	Affirmative	
9	National Association of Regulatory Utility Commissioners	Diane J. Barney		
9	Oregon Public Utility Commission	Jerome Murray	Abstain	View
9	Public Service Commission of South Carolina	Philip Riley	Affirmative	
9	Utah Public Service Commission	Ric Campbell	Affirmative	
10	Florida Reliability Coordinating Council	Linda Campbell	Abstain	
10	Midwest Reliability Organization	Dan R. Schoenecker	Affirmative	View
10	New York State Reliability Council	Alan Adamson	Affirmative	
10	Northeast Power Coordinating Council, Inc.	Guy V. Zito	Affirmative	
10	ReliabilityFirst Corporation	Jacquie Smith		
10	SERC Reliability Corporation	Carter B Edge	Affirmative	
10	Western Electricity Coordinating Council	Louise McCarren	Affirmative	View

Copyright © 2010 by the North American Electric Reliability Corporation. : All rights reserved.
A New Jersey Nonprofit Corporation

Standard Development Roadmap

This section is maintained by the drafting team during the development of the standard and will be removed when the standard becomes effective.

Development Steps Completed:

1. Standards Committee approves SAR for posting on June 5, 2007.
2. The SAR was posted for comment from June 11, 2007–July 10, 2007.
3. The SC approves development of the standard on August 13, 2007.
4. First posting of revised standard on July 24, 2009.
5. Second posting of revised standard on June 11, 2010
6. Third posting of revised standard on September 24, 2010

Description of Current Draft:
This is the third draft of the Standard. This standard merges previous standards PRC-005-1, PRC-008-0, PRC-011-0, and PRC-017-0. It also addresses FERC comments from Order 693, and addresses observations from the NERC System Protection and Control Task Force, as presented in *NERC SPCTF Assessment of Standards: PRC-005-1 — Transmission and Generation Protection System Maintenance and Testing, PRC-008-0 — Underfrequency Load Shedding Equipment Maintenance Programs, PRC-011-0 — UVLS System Maintenance and Testing, PRC-017-0 — Special Protection System Maintenance and Testing.*

Future Development Plan:

Anticipated Actions	Anticipated Date
1. Post for combined 30-day comment and ballot.	November 17-December 17, 2010
2. Conduct successive ballot	December 7– December 17, 2010
3. Drafting Team Responds to Comments	January 5, 2011–January 25, 2011

Definitions of Terms Used in Standard

This section includes all newly defined or revised terms used in the proposed standard. Terms already defined in the Reliability Standards Glossary of Terms are not repeated here. New or revised definitions listed below become approved when the proposed standard is approved. When the standard becomes effective, these defined terms will be removed from the individual standard and added to the Glossary.

Protection System Maintenance Program (PSMP) — An ongoing program by which Protection System components are kept in working order and proper operation of malfunctioning components is restored. A maintenance program for a specific component includes one or more of the following activities:

- Verify — Determine that the component is functioning correctly.
- Monitor — Observe the routine in-service operation of the component.
- Test — Apply signals to a component to observe functional performance or output behavior, or to diagnose problems.
- Inspect — Detect visible signs of component failure, reduced performance and degradation.
- Calibrate — Adjust the operating threshold or measurement accuracy of a measuring element to meet the intended performance requirement.
- Restore — Return malfunctioning components to proper operation.

Protection System (modification)

- Protective relays which respond to electrical quantities,
- communications systems necessary for correct operation of protective functions,
- voltage and current sensing devices providing inputs to protective relays,
- station dc supply associated with protective functions (including station batteries, battery chargers, and non-battery-based dc supply), and
- control circuitry associated with protective functions through the trip coil(s) of the circuit breakers or other interrupting devices.

The following terms are defined for use only within PRC-005-2, and should remain with the standard upon approval rather than being moved to the Glossary of Terms.

Maintenance Correctable Issue – Failure of a component to operate within design parameters such that it cannot be restored to functional order by repair or calibration during performance of the initial on-site activity. Therefore this issue requires follow-up corrective action.

Segment – Protection Systems or components of a consistent design standard, or a particular model or type from a single manufacturer that typically share other common elements. Consistent performance is expected across the entire population of a segment. A segment must contain at least sixty (60) individual components.

Component Type - Any one of the five specific elements of the Protection System definition.

Component – A component is any individual discrete piece of equipment included in a Protection System, such as a protective relay or current sensing device. For components such as control circuits, the designation of what constitutes a control circuit component is very dependent upon how an entity performs and tracks the testing of the control circuitry. Some entities test their control circuits on a breaker basis whereas others test their circuitry on a “local zone of protection” basis. Thus, entities are

allowed the latitude to designate their own definitions of "control circuit components." Another example of where the entity has some discretion on determining what constitutes a single component is the voltage and current sensing devices, where the entity may choose either to designate a full three-phase set of such devices or a single device as a single component.

Countable Event – Any failure of a component which requires repair or replacement, any condition discovered during the verification activities in Tables 1-1 through 1-5 which requires corrective action, or a Misoperation attributed to hardware failure or calibration failure. Misoperations due to product design errors, software errors, relay settings different from specified settings, Protection System component configuration errors, or Protection System application errors are *not* included in Countable Events.

A. Introduction

1. Title: **Protection System Maintenance**

2. Number: PRC-005-2

3. Purpose: To ensure all transmission and generation Protection Systems affecting the reliability of the Bulk Electric System (BES) are maintained.

4. Applicability:

4.1. Functional Entities:

4.1.1 Transmission Owners

4.1.2 Generator Owners

4.1.3 Distribution Providers

4.2. Facilities:

4.2.1 Protection Systems applied on, or designed to provide protection for, the BES.

4.2.2 Protection Systems used for underfrequency load-shedding systems installed per ERO underfrequency load-shedding requirements.

4.2.3 Protection Systems used for undervoltage load-shedding systems installed to prevent system voltage collapse or voltage instability for BES reliability.

4.2.4 Protection Systems installed as a Special Protection System (SPS) for BES reliability.

4.2.5 Protection Systems for generator Facilities that are part of the BES, including:

4.2.5.1 Protection Systems that act to trip the generator either directly or via generator lockout or auxiliary tripping relays.

4.2.5.2 Protection Systems for generator step-up transformers for generators that are part of the BES.

4.2.5.3 Protection Systems for transformers connecting aggregated generation, where the aggregated generation is part of the BES (e.g., transformers connecting facilities such as wind-farms to the BES).

4.2.5.4 Protection Systems for generator-connected station service transformers for generators that are part of the BES.

4.2.5.5 Protection Systems for system-connected station service transformers for generators that are part of the BES.

5. (Proposed) Effective Date: See Implementation Plan

B. Requirements

R1. Each Transmission Owner, Generator Owner, and Distribution Provider shall establish a Protection System Maintenance Program (PSMP) for its Protection Systems applied on, or designed to provide protection for, the BES. The PSMP shall: *[Violation Risk Factor: Medium] [Time Horizon: Long Term Planning]*

1.1. Address all Protection System component types.

1.2. Identify which Protection System component types are addressed through time-based, performance-based (per PRC-005 Attachment A), or a combination of these maintenance methods (per PRC-005-Attachment A). All batteries associated with the station dc supply component of a Protection System shall be included in a time-based program as described in Table 1-4.

1.3. Identify the associated maintenance intervals for time-based programs

1.4. Include all monitoring attributes and related maintenance activities applied to each Protection System component type, to include those specified in Tables 1-1 through 1-5.

1.5. Identify calibration tolerances or other equivalent parameters for each Protection System component type that establish acceptable parameters for the conclusion of maintenance activities.

R2. Each Transmission Owner, Generator Owner, and Distribution Provider that uses maintenance intervals for monitored Protection Systems described in Tables 1-1 through 1-5, shall verify those components possess the monitoring attributes identified in Tables 1-1 through 1-5 in its PSMP. *[Violation Risk Factor: Medium] [Time Horizon: Long Term Planning]*

R3. Each Transmission Owner, Generator Owner, and Distribution Provider that uses performance-based maintenance intervals in its PSMP shall follow the procedure established in PRC-005 Attachment A to establish and maintain its performance-based intervals. *[Violation Risk Factor: Medium] [Time Horizon: Operations Planning]*

R4. Each Transmission Owner, Generator Owner, and Distribution Provider shall implement and follow its PSMP, including identification of the resolution of all maintenance correctable issues as follows: *[Violation Risk Factor: High] [Time Horizon: Operations Planning]*

4.1. Perform the maintenance activities for all Protection System components according to the PSMP established in accordance with Requirement R1:

4.1.1. For time-based maintenance programs, perform maintenance activities no less frequently than the maximum allowable intervals established in Tables 1-1 through 1-5.

4.1.2. For performance-based maintenance programs, perform the maintenance activities no less frequently than the intervals established in Requirement R3.

4.2. Either verify that the components are within the acceptable parameters established in accordance with Requirement R1, Part 1.5 at the conclusion of the maintenance activities, or initiate resolution of any identified maintenance correctable issues.

C. Measures

M1. Each Transmission Owner, Generator Owner and Distribution Provider shall have a current or updated documented Protection System Maintenance Program that addresses all component types of its Protection Systems, as required by Requirement R1. For each Protection System component type, the documentation shall include the type of maintenance program applied (time-based, performance-based, or a combination of these maintenance methods), maintenance activities, and maintenance intervals as specified in Requirement R1, Parts 1.1 through 1. 5.

M2. Each Transmission Owner, Generator Owner, and Distribution Provider that uses maintenance intervals for monitored Protection Systems shall have evidence such as engineering drawings

or manufacturer's information showing that the components possess the monitoring attributes identified in Tables 1-1 through 1-5, as required by Requirement R2.

M3. Each Transmission Owner, Generator Owner, and Distribution Provider that uses a performance-based maintenance program shall have evidence such as equipment lists, dated maintenance records, and dated analysis records and results that its current performance-based maintenance program is in accordance with Requirement R3.

M4. Each Transmission Owner, Generator Owner, and Distribution Provider shall have evidence such as dated maintenance records, dated maintenance summaries, dated check-off lists, dated inspection records or dated work orders as evidence that it has implemented the Protection System Maintenance Program and initiated resolution of identified maintenance correctable issues in accordance with Requirement R4.

D. Compliance

1. Compliance Monitoring Process

1.1. Compliance Monitoring Responsibility

Regional Entity

1.2. Compliance Monitoring and Enforcement Processes:

Compliance Audits

Self-Certifications

Spot Checking

Compliance Violation Investigations

Self-Reporting

Complaints

1.3. Data Retention

The Transmission Owner, Generator Owner, and Distribution Provider shall each keep data or evidence to demonstrate compliance as identified below unless directed by its Compliance Enforcement Authority to retain specific evidence for a longer period of time as part of an investigation.

For R1, the Transmission Owner, Generator Owner, and Distribution Provider shall each keep its current dated Protection System Maintenance Program including the documentation that specifies the type of maintenance program applied for each Protection System component type.

For R2, the Transmission Owner, Generator Owner, and Distribution Provider shall each keep the evidence that proves the Protection System components possess the identified monitoring attributes as long as they are used to justify the intervals and activities associated with a performance-based maintenance program as identified within Tables 1-1 through 1-5.

For R3 and R4, the Transmission Owner, Generator Owner, and Distribution Provider shall each keep documentation of the two most recent performances of each distinct maintenance activity for the Protection System components, or to the previous scheduled audit date, whichever is longer.

The Compliance Enforcement Authority shall keep the last periodic audit report and all requested and submitted subsequent compliance records.

1.4. Additional Compliance Information

None.

2. Violation Severity Levels

Requirement Number	Lower VSL	Moderate VSL	High VSL	Severe VSL
R1	Failed to specify whether one component type is being addressed by time-based or performance-based maintenance.	Failed to specify whether two component types are being addressed by time-based or performance-based maintenance.	Failed to include station batteries in a time-based program OR Failed to include all maintenance activities relevant for the identified monitoring attributes specified in Tables 1-1 through 1-5. OR Failed to establish calibration tolerance or equivalent parameters to determine if components are within acceptable parameters.	Entity has not established a PSMP. OR The entity's PSMP failed to address three or more component types included in the definition of 'Protection System' OR Failed to specify whether three or more component types are being addressed by time-based or performance-based maintenance.
R2	Entity has Protection System components in a condition-based PSMP, but documentation to support the monitoring attributes used to determine relevant intervals is incomplete on no more than 5% of the Protection System components maintained according to Tables 1-1 through 1-5.	Entity has Protection System elements in a condition-based PSMP, but documentation to support monitoring attributes used to determine relevant intervals is incomplete on more than 5%, but 10% or less, of the Protection System components maintained according to Tables 1-1 through 1-5.	Entity has Protection System elements in a condition-based PSMP, but documentation to support monitoring attributes used to determine relevant intervals is incomplete on more than 10%, but 15% or less, of the Protection System components maintained according to Tables 1-1 through 1-5.	Entity has Protection System elements in a condition-based PSMP, but documentation to support monitoring attributes used to determine relevant intervals is incomplete on more than 15% of the Protection System components maintained according to Tables 1-1 through 1-5.
R3	Entity has Protection System elements in a performance-based PSMP but has: 1) Failed to reduce countable events to less than 4% within three years OR 2) Failed to annually document program activities, results, maintenance dates, or countable events for 5% or less of components in any individual segment	NA	Entity has Protection System elements in a performance-based PSMP but has failed to reduce countable events to less than 4% within four years.	Entity has Protection System components in a performance-based PSMP but has: 1) Failed to reduce countable events to less than 4% within five years OR 2) Failed to annually document program activities, results, maintenance dates, or countable events for over 5% of components

Requirement Number	Lower VSL	Moderate VSL	High VSL	Severe VSL
	OR 3) Maintained a segment with 54-59 components or containing different manufacturers.			in any individual segment OR 3) Maintained a segment with less than 54 components OR 4) Failed to: • Annually update the list of components, • Perform maintenance on the greater of 5% of the segment population or 3 components, • Annually analyze the program activities and results for each segment.
R4	Entity has failed to complete scheduled program on 5% or less of total Protection System components. OR Entity has failed to initiate resolution on 5% or less of identified maintenance-correctable issues.	Entity has failed to complete scheduled program on greater than 5%, but no more than 10% of total Protection System components OR Entity has failed to initiate resolution on greater than 5%, but no more than 10% of identified maintenance-correctable issues.	Entity has failed to complete scheduled program on greater than 10%, but no more than 15% of total Protection System components OR Entity has failed to initiate resolution on greater than 10%, but no more than 15% of identified.	Entity has failed to complete scheduled program on greater than 15% of total Protection System components OR Entity has failed to initiate resolution on greater than 15% of identified maintenance-correctable issues.

E. Regional Variances

None

F. Supplemental Reference Documents

The following documents present a detailed discussion about determination of maintenance intervals and other useful information regarding establishment of a maintenance program.

1. PRC-005-2 Protection System Maintenance Supplementary Reference — July 2009.
2. NERC Protection System Maintenance Standard PRC-005-2 FREQUENTLY ASKED QUESTIONS — Practical Compliance and Implementation DRAFT 1.0 — June 2009

Version History

Version	Date	Action	Change Tracking
2	TBD	Complete revision, absorbing maintenance requirements from PRC-005-1, PRC-008-0, PRC-011-0, PRC-017	Complete revision

Table 1-1 Component Type - Protective Relay **Note:** Table requirements apply to all components of Protection Systems, UVLS and UFLS Systems, and SPSs except as noted.		
Component Attributes	**Maximum Maintenance Interval**	**Activities**
Any unmonitored protective relay not having all the monitoring attributes of a category below.	6 calendar years	Verify that settings are as specified For non-microprocessor relays: • Test and calibrate For microprocessor relays: • Verify operation of the relay inputs and outputs that are essential to proper functioning of the Protection System. • Verify acceptable measurement of power system input values.
Monitored microprocessor protective relay with the following:: • Internal self diagnosis and alarming. • Voltage and/or current waveform sampling three or more times per power cycle, and conversion of samples to numeric values for measurement calculations by microprocessor electronics that are also performing self monitoring and alarming (see Table 2). • Alarming for power supply failure (see Table 2).	12 calendar years	Verify: • Settings are as specified. • Operation of the relay inputs and outputs that are essential to proper functioning of the Protection System. • Acceptable measurement of power system input values.
Monitored microprocessor protective relay with preceding row attributes and the following: • Ac measurements are continuously verified by comparison to an independent ac measurement source, with alarming for excessive error. (See Table 2) • Some or all binary or status inputs and control outputs are monitored by a process that continuously demonstrates ability to perform as designed, with alarming for failure. (See Table 2) • Alarming for change of settings. (See Table 2)	12 calendar years	Verify only the unmonitored relay inputs and outputs that are essential to proper functioning of the Protection System.

Table 1-2 Component Type - Communications Systems **Note:** Table requirements apply to all components of Protection Systems, UVLS and UFLS Systems, and SPSs except as noted.		
Component Attributes	**Maximum Maintenance Interval**	**Activities**
Any unmonitored communications system necessary for correct operation of protective functions, and not having all the monitoring attributes of a category below.	3 calendar months	Verify that the communications system is functional.
	6 calendar years	Verify that the channel meets performance criteria such as signal level, reflected power, or data error rate. Verify essential signals to and from other Protection System components.
Any communications system with continuous monitoring or periodic automated testing for the presence of the channel function, and alarming for loss of function. (See Table 2)	12 calendar years	Verify that the channel meets performance criteria such as signal level, reflected power, or data error rate. Verify essential signals to and from other Protection System components.
Any communications system with continuous monitoring or periodic automated testing for the performance of the channel using criteria such as signal level, reflected power, or data error rate, and alarming for excessive performance degradation. (See Table 2)	No periodic maintenance specified	None.

Table 1-3 Component Type - Voltage and Current Sensing Devices Providing Inputs to Protective Relays **Note:** Table requirements apply to all components of Protection Systems, UVLS and UFLS Systems, and SPSs except as noted.		
Component Attributes	**Maximum Maintenance Interval**	**Activities**
Any voltage and current sensing devices not having monitoring attributes of the category below.	12 calendar years	Verify that acceptable measurements of the current and voltage signals are received by the protective relays.
Voltage and Current Sensing devices connected to microprocessor relays with AC measurements are continuously verified by comparison of sensing input value as measured by the microprocessor relay to an independent ac measurement source, with alarming for unacceptable error or failure.	No periodic maintenance specified	None.

Table 1-4 Component Type - Station dc Supply **Note:** Table requirements apply to all components of Protection Systems, UVLS and UFLS Systems, and SPSs except as noted.		
Component Attributes	**Maximum Maintenance Interval**	**Activities**
Any dc supply for a UFLS or UVLS system.	When control circuits are verified	Verify dc supply voltage
Any unmonitored station dc supply not having the monitoring attributes of a category below. (excluding UFLS and UVLS)	3 Calendar Months	Verify: • Station dc supply voltage Inspect: • Electrolyte level (excluding valve-regulated lead acid batteries) • For unintentional grounds
	18 Calendar Months	Verify: • State of charge of the individual battery cells/units • Float voltage of battery charger • Battery continuity • Battery terminal connection resistance • Battery internal cell-to-cell or unit-to-unit connection resistance (where available to measure) Inspect: • Cell condition of all individual battery cells where cells are visible – or measure battery cell/unit internal ohmic values where the cells are not visible • Physical condition of battery rack • Condition of non-battery-based dc supply
Any unmonitored Station dc supply in which a battery is not used and not having the monitoring attributes of a category below. (excluding UFLS and UVLS)	6 Calendar Years	Verify that the dc supply can perform as designed when ac power from the grid is not present.
Unmonitored Station dc supply with Valve Regulated Lead-Acid (VRLA) batteries that does not have the monitoring attributes of a category below. (excluding UFLS and UVLS)	3 Calendar Months	Verify that the station battery can perform as designed by evaluating the measured cell/unit internal ohmic values to station battery baseline.

Table 1-4 Component Type - Station dc Supply **Note:** Table requirements apply to all components of Protection Systems, UVLS and UFLS Systems, and SPSs except as noted.		
Component Attributes	**Maximum Maintenance Interval**	**Activities**
	---------- or ----------	
	3 Calendar Years	Verify that the station battery can perform as designed by conducting a performance or service capacity test of the entire battery bank.
Unmonitored Station dc supply with Vented Lead-Acid Batteries (VLA) that does not have the monitoring attributes of a category below. (excluding UFLS and UVLS)	18 Calendar Months	Verify that the station battery can perform as designed by evaluating the measured cell/unit internal ohmic values to station battery baseline.
	---------- or ----------	
	6 Calendar Years	Verify that the station battery can perform as designed by conducting a performance, service, or modified performance capacity test of the entire battery bank.
Unmonitored Station dc supply with Nickel-Cadmium (Ni-Cad) batteries that does not have the monitoring attributes of a category below. (excluding UFLS and UVLS)	6 Calendar Years	Verify that the station battery can perform as designed by conducting a performance service, or modified performance capacity test of the entire battery bank.
Monitored Station dc supply (excluding UFLS and UVLS) with: Monitor and alarm for variations from defined levels (See Table 2): • Station dc supply voltage (voltage of battery charger) • State of charge of the individual battery cell/units • Battery continuity of station battery • Cell-to-cell (if available) and battery terminal resistance	18 calendar months	Inspect: • Cell condition of all individual battery cells where cells are visible – or measure battery cell/unit internal ohmic values where the cells are not visible • Physical condition of battery rack • Condition of non-battery-based dc supply

Table 1-4 Component Type - Station dc Supply **Note:** Table requirements apply to all components of Protection Systems, UVLS and UFLS Systems, and SPSs except as noted.		
Component Attributes	**Maximum Maintenance Interval**	**Activities**
• Electrolyte level of all cells in a station battery • Unintentional dc grounds • Cell/unit internal ohmic values of station battery	6 calendar years	Verify that the monitoring devices are calibrated (where necessary)
Continuously monitored Station dc supply (excludes UFLS and UVLS) with preceding row attributes and the following: • The monitoring devices themselves are monitored.	18 calendar months	Inspect: • Cell condition of all individual battery cells where cells are visible – or measure battery cell/unit internal ohmic values where the cells are not visible • Physical condition of battery rack • Condition of non-battery-based dc supply

Table 1-5 Component Type - Control Circuitry **Note:** Table requirements apply to all components of Protection Systems, UVLS and UFLS Systems, and SPSs except as noted.		
Component Attributes	**Maximum Maintenance Interval**	**Activities**
Trip coils or actuators of circuit breakers, interrupting devices, or mitigating devices (excluding UFLS or UVLS systems).	6 calendar years	Verify that each trip coil is able to operate the circuit breaker, interrupting device, or mitigating device.
Trip coils of circuit breakers and interrupting devices in UFLS or UVLS systems.	No periodic maintenance specified	None.
Electromechanical trip or auxiliary devices	6 calendar years	Verify electrical operation of electromechanical trip and auxiliary devices
Unmonitored Control circuitry associated with protective functions	12 calendar years	Verify all paths of the control and trip circuits.
Control circuitry whose continuity and energization or ability to operate are monitored and alarmed (See Table 2).	No periodic maintenance specified	None.

Table 2 – Alarming Paths In Tables 1-1 through 1-5, alarm attributes used to justify extended maximum maintenance intervals and/or reduced maintenance activities are subject to the following maintenance requirements		
Component Attributes	**Maximum Maintenance Interval**	**Activities**
Any alarm path through which alarms in Tables 1-1 through 1-5 are conveyed from the alarm origin to the location of corrective action, and not having all the attributes of the category below. Alarms are automatically reported within 24 hours of DETECTION to a location where corrective action can be taken.	When alarm producing device or system is verified	Verify that the alarm signals are conveyed to a location where corrective action can be taken.
Alarm Path with monitoring: The location where corrective action is taken receives an alarm within 24 hours for failure of any portion of the alarming path from the alarm origin to the location where corrective action can be taken.	No periodic maintenance specified	None.

PRC-005 — Attachment A

Criteria for a Performance-Based Protection System Maintenance Program

Purpose: To establish a technical basis for initial and continued use of a performance-based Protection System Maintenance Program (PSMP).

To establish the technical justification for the initial use of a performance-based PSMP:

1. Develop a list with a description of components included in each designated segment of the Protection System component population.
2. Maintain the components in each segment according to the time-based maximum allowable intervals established in Tables 1-1through 1-5 until results of maintenance activities for the segment are available for a minimum of 30 individual components of the segment.
3. Document the maintenance program activities and results for each segment, including maintenance dates and countable events[1] for each included component.
4. Analyze the maintenance program activities and results for each segment to determine the overall performance of the segment and develop maintenance intervals.
5. Determine the maximum allowable maintenance interval for each segment such that the segment experiences countable events on no more than 4% of the components within the segment, for the greater of either the last 30 components maintained or all components maintained in the previous year.

To maintain the technical justification for the ongoing use of a performance-based PSMP:

1. At least annually, update the list of Protection System components and segments and/or description if any changes occur within the segment.
2. Perform maintenance on the greater of 5% of the components (addressed in the performance based PSMP) in each segment or 3 individual components within the segment in each year.
3. For the prior year, analyze the maintenance program activities and results for each segment to determine the overall performance of the segment.
4. If the components in a Protection System segment maintained through a performance-based PSMP experience 4% or more countable events, develop, document, and implement an action plan to reduce the countable events to less than 4% of the segment population within 3 years.
5. Using the prior year's data, determine the maximum allowable maintenance interval for each segment such that the segment experiences countable events on no more than 4% of the components within the segment, for the greater of either the last 30 components maintained or all components maintained in the previous year.

[1] Countable events include any failure of a component requiring repair or replacement, any condition discovered during the verification activities in Table 1a through Table 1c which requires corrective action, or a Misoperation attributed to hardware failure or calibration failure.

Definitions of Terms Used in Standard

This section includes all newly defined or revised terms used in the proposed standard. Terms already defined in the Reliability Standards Glossary of Terms are not repeated here. New or revised definitions listed below become approved when the proposed standard is approved. When the standard becomes effective, these defined terms will be removed from the individual standard and added to the Glossary.

Protection System Maintenance Program (PSMP) — An ongoing program by which Protection System components are kept in working order and proper operation of malfunctioning components is restored. A maintenance program for a specific component includes one or more of the following activities:

- ~~Verification — A means of determining~~Verify — Determine that the component is functioning correctly.
- ~~Monitoring — Observation of~~Monitor — Observe the routine in-service operation of the component.
- ~~Testing — Application of~~Test — Apply signals to a component to observe functional performance or output behavior, or to diagnose problems.
- ~~Inspection — To detect~~Inspect — Detect visible signs of component failure, reduced performance and degradation.
- ~~Calibration — Adjustment of~~Calibrate — Adjust the operating threshold or measurement accuracy of a measuring element to meet the intended performance requirement.
- ~~Upkeep — Routine activities necessary to assure that the component remains in good working order and implementation of any manufacturer's hardware and software service advisories which are relevant to the application of the device.~~
- ~~Restoration — The actions to restore proper operation of~~ Restore — Return malfunctioning components to proper operation.

Protection System (modification)

- Protective relays~~, communication~~ which respond to electrical quantities,
- communications systems necessary for correct operation of protective functions,
- voltage and current sensing devices providing inputs to protective relays~~ and associated circuitry from the voltage and current sensing devices,~~ ,
- station dc supply associated with protective functions (including station batteries, battery chargers, and non-battery-based dc supply), and
- control circuitry associated with protective functions ~~from the station dc supply~~ through the trip coil(s) of the circuit breakers or other interrupting devices.

The following terms are defined for use only within PRC-005-2, and should remain with the standard upon approval rather than being moved to the Glossary of Terms.

Maintenance Correctable Issue – Failure of a component to operate within design parameters such that it cannot be restored to functional order by repair or calibration during performance of the initial on-site activity. Therefore this issue requires follow-up corrective action.

Segment – Protection Systems or components of a consistent design standard, or a particular model or type from a single manufacturer that typically share other common elements. Consistent performance is expected across the entire population of a segment. A segment must contain at least sixty (60) individual components.

Component Type - Any one of the five specific elements of the Protection System definition.

Component – A component is any individual discrete piece of equipment included in a Protection System, such as a protective relay or current sensing device. For components such as control circuits, the designation of what constitutes a control circuit component is very dependent upon how an entity performs and tracks the testing of the control circuitry. Some entities test their control circuits on a breaker basis whereas others test their circuitry on a "local zone of protection" basis. Thus, entities are allowed the latitude to designate their own definitions of "control circuit components." Another example of where the entity has some discretion on determining what constitutes a single component is the voltage and current sensing devices, where the entity may choose either to designate a full three-phase set of such devices or a single device as a single component.

Countable Event – Any failure of a component which requires repair or replacement, any condition discovered during the verification activities in Tables 1-1 through 1-5 which requires corrective action, or a Misoperation attributed to hardware failure or calibration failure. Misoperations due to product design errors, software errors, relay settings different from specified settings, Protection System component configuration errors, or Protection System application errors are *not* included in Countable Events.

A. Introduction

1. Title: **Protection System Maintenance**

2. Number: PRC-005-2

3. Purpose: To ensure all transmission and generation Protection Systems affecting the reliability of the Bulk Electric System (BES) are maintained.

4. Applicability:

4.1. Functional Entities:

4.1.1 Transmission Owners

4.1.2 Generator Owners

4.1.3 Distribution Providers

4.2. Facilities:

4.2.1 Protection Systems applied on, or designed to provide protection for, the BES.

4.2.2 Protection ~~System components~~Systems used for underfrequency load-shedding systems installed per ERO underfrequency load-shedding requirements.

4.2.3 Protection ~~System components~~Systems used for undervoltage load-shedding systems installed to prevent system voltage collapse or voltage instability for BES reliability.

4.2.4 Protection ~~System components~~Systems installed as a Special Protection System (SPS) for BES reliability.

4.2.5 Protection Systems for generator Facilities that are part of the BES, including:

4.2.5.1 Protection ~~System components~~Systems that act to trip the generator either directly or via generator lockout or auxiliary tripping relays.

4.2.5.2 Protection Systems for generator step-up transformers for generators that are part of the BES.

4.2.5.3 Protection Systems for transformers connecting aggregated generation, where the aggregated generation is part of the BES (e.g., transformers connecting facilities such as wind-farms to the BES).

4.2.5.4 Protection Systems for generator-connected station service transformers for generators that are part of the BES.

4.2.5.5 Protection Systems for system-connected station service transformers for generators that are part of the BES.

5. (Proposed) Effective Date: See Implementation Plan

B. Requirements

R1. Each Transmission Owner, Generator Owner, and Distribution Provider shall establish a Protection System Maintenance Program (PSMP) for its Protection Systems ~~that use measurements of voltage, current, frequency and/or phase angle to determine~~

anomalies and to trip a portion of the BES[1] and that are applied on, or are designed to provide protection for, the BES. The PSMP mustshall: *[Violation Risk Factor: High*Medium*] [Time Horizon: Long Term Planning]*

1.1. IdentifyAddress all Protection System components;component types.

1.2. Identify whether eachwhich Protection System component istypes are addressed through time-based (per Table 1a), condition-based (per Table 1b or 1c),, performance-based (per PRC-005 Attachment A), or a combination of these maintenance methods and identify the associated maintenance interval;

1.3. For each Protection System component, include all maintenance activities specified in Tables 1a, 1b, or 1c associated with the maintenance method used per Requirement 1, part 1.1; and

1.4.1.2. Include all (per PRC-005-Attachment A). All batteries associated with the station dc supply component of a Protection System shall be included in a time-based program as described in Table 1-4.

1.3. Identify the associated maintenance intervals for time-based programs

1.4. Include all monitoring attributes and related maintenance activities applied to each Protection System component type, to include those specified in Tables 1-1 through 1-5.

1.5. Identify calibration tolerances or other equivalent parameters for each Protection System component type that establish acceptable parameters for the conclusion of maintenance activities.

R2. Each Transmission Owner, Generator Owner, and Distribution Provider that uses condition-based maintenance intervals in its PSMP for partially or fullyfor monitored Protection Systems described in Tables 1-1 through 1-5, shall ensure theverify those components to which the condition-based criteria are applied, possess the monitoring attributes identified in Tables 1b or 1c1-1 through 1-5 in its PSMP. *[Violation Risk Factor: Medium] [Time Horizon: Long Term Planning]*

R3. Each Transmission Owner, Generator Owner, and Distribution Provider that uses performance-based maintenance intervals in its PSMP shall follow the procedure established in PRC-005 Attachment A to establish and maintain its performance-based intervals. *[Violation Risk Factor: Medium] [Time Horizon: Long TermOperations Planning]*

R4. Each Transmission Owner, Generator Owner, and Distribution Provider shall implement and follow its PSMP, including identification of the resolution of all maintenance correctable issues[2] as follows: *[Violation Risk Factor: Medium*High*] [Time Horizon: Long TermOperations Planning]*

4.1. For time-based or condition-based maintenance programs, perform Perform the maintenance activities detailed in Table 1 (for the appropriate monitoring

[1] Devices that sense non-electrical conditions, such as thermal or transformer sudden pressure relays are not included within the scope of this standard.

[2] A maintenance correctable issue is a failure of a device to operate within design parameters that cannot be restored to functional order by repair or calibration while performing the initial on-site maintenance activity, and that requires follow-up corrective action

~~level(s))~~ for all Protection System components according to the PSMP established ~~per~~in accordance with Requirement ~~R1within~~R1:

4.1.1. For time-based maintenance programs, perform maintenance activities no less frequently than the maximum allowable intervals ~~not to exceed those~~ established in Tables ~~1a, 1b, and 1c~~1-1 through 1-5.

4.1.2. For performance-based maintenance programs, perform the maintenance activities ~~detailed in Table 1 (for~~no less frequently than the ~~appropriate monitoring level(s)) for all Protection System components in accordance within the maximum allowable~~ intervals established ~~per~~in Requirement R3.

4.2. ~~Ensure either~~Either verify that the components are within the acceptable parameters established in accordance with Requirement R1, Part 1.5 at the conclusion of the maintenance activities, or initiate resolution of any ~~necessary activities to correct unresolved~~ identified maintenance correctable issues[3].

C. Measures

M1. Each Transmission Owner, Generator Owner and Distribution Provider ~~will~~shall have a current or updated documented Protection System Maintenance Program that addresses ~~protective relays, communication systems necessary for correct operation of protective functions, voltage and current sensing inputs to protective relays and associated circuitry from the voltage and current sensing devices, station dc supply, and control circuitry associated with protective functions from the station dc supply through the trip coil(s)~~all component types of ~~the circuit breakers or other interrupting devices~~its Protection Systems, as required by Requirement R1. For each ~~protection system~~Protection System component type, the documentation shall include the type of maintenance program applied~~;~~ (time-based, performance-based, or a combination of these maintenance methods), maintenance activities, and maintenance intervals as specified in Requirement R1, Parts 1.1 through 1.~~4~~ 5.

M2. Each Transmission Owner ~~and~~, Generator Owner, and Distribution Provider that uses ~~a condition-based~~ maintenance ~~program should~~intervals for monitored Protection Systems shall have evidence such as engineering drawings or manufacturer's information showing that the components possess the monitoring attributes identified in Tables ~~1b or 1c~~1-1 through 1-5, as required by Requirement R2.

M3. Each Transmission Owner, Generator Owner, ~~or~~and Distribution Provider that uses a performance-based maintenance program ~~should~~shall have evidence such as equipment lists, dated maintenance records, and dated analysis records and results that its current performance-based maintenance program is in accordance with Requirement R3.

M4. Each Transmission Owner, Generator Owner, ~~or~~and Distribution Provider shall have evidence such as dated maintenance records ~~or~~, dated maintenance summaries ~~(including dates that the components were maintained) that~~, dated check-off lists, dated inspection records or

[3] ~~A maintenance correctable issue is a failure of a device to operate within design parameters that cannot be restored to functional order by repair or calibration while performing the initial on-site maintenance activity and that requires follow-up corrective action.~~

dated work orders as evidence that it has implemented the Protection System Maintenance Program and initiated resolution of identified maintenance correctable issues in accordance with Requirement R4.

D. Compliance

1. Compliance Monitoring Process

1.1. Compliance Monitoring Responsibility

Regional Entity

~~1.2. Compliance Monitoring Period and Reset Time Frame~~

~~Not Applicable~~

~~1.3.~~1.2. Compliance Monitoring and Enforcement Processes:

Compliance Audits
Self-Certifications
Spot Checking
Compliance Violation Investigations
Self-Reporting
Complaints

~~1.4.~~1.3. Data Retention

The Transmission Owner, Generator Owner, and Distribution Provider shall each ~~retain~~keep data or evidence to demonstrate compliance as identified below unless directed by its Compliance Enforcement Authority to retain specific evidence for a longer period of time as part of an investigation.

For R1, the Transmission Owner, Generator Owner, and Distribution Provider shall each keep its current dated Protection System Maintenance Program including the documentation that specifies the type of maintenance program applied for each Protection System component type.

For R2, the Transmission Owner, Generator Owner, and Distribution Provider shall each keep the evidence that proves the Protection System components possess the identified monitoring attributes as long as they are used to justify the intervals and activities associated with a performance-based maintenance program as identified within Tables 1-1 through 1-5.

For R3 and R4, the Transmission Owner, Generator Owner, and Distribution Provider shall each keep documentation of the two most recent performances of each distinct maintenance activity for the Protection System components, or to the previous ~~on-site~~scheduled audit date, whichever is longer.

The Compliance Enforcement Authority shall keep the last periodic audit report and all requested and submitted subsequent compliance records.

~~1.5.~~1.4. Additional Compliance Information

None.

2. Violation Severity Levels

Requirement Number	Lower VSL	Moderate VSL	High VSL	Severe VSL
R1	~~The entity's PSMP included all of the 'types' of components included in the definition of 'Protection System', but, for no more than 5% of the components, failed~~Failed to ~~either~~ ~~• identify the component,~~ specify whether ~~the~~one component type is being addressed by time-based~~, condition-based,~~ or performance-based maintenance~~, or~~ . ~~Include all maintenance activities specified in Table 1a, Table 1b, or Table 1c, as applicable.~~	~~The entity's PSMP included all of the 'types' of components included in the definition of 'Protection System', but, for grater than 5%, but no more than 10% of the components, failed~~Failed to ~~either~~ ~~• identify the component,~~ specify whether ~~the~~two component ~~is~~types are being addressed by time-based~~, condition-based,~~ or performance-based maintenance~~, or~~ . ~~Include all maintenance activities specified in Table 1a, Table 1b, or Table 1c, as applicable.~~	~~The entity's PSMP included all of the 'types' of components included in the definition of 'Protection System', but, for greater than 10%, but no more than 15%, of the components, failed to either~~ ~~• identify the component,~~ ~~• specify whether the component is being addressed by time-based, condition-based, or performance-based maintenance, or~~ ~~Include~~Failed to include station batteries in a time-based program OR Failed to include all maintenance activities relevant for the identified monitoring attributes specified in ~~Table 1a, Table 1b, or Table 1c, as applicable~~Tables 1-1 through 1-5. OR Failed to establish calibration tolerance or equivalent parameters to determine if components are within acceptable parameters.	~~The entity's PSMP failed to address one or more of the types of components included in the definition of 'Protection System'~~ ~~-or-~~ Entity has not established a PSMP. ~~-or-~~ OR The ~~entity's'~~entity's PSMP ~~included all of the 'types' of components~~failed to address three or more component types included in the definition of 'Protection System' ~~, but, for more than 15% of the components, failed to either~~ ~~• identify the component,~~ OR • Failed to specify whether ~~the~~three or more component ~~is~~types are being addressed by time-based~~, condition-based,~~ or performance-based maintenance~~, or~~ ~~Include all maintenance activities specified in Table 1a, Table 1b, or Table 1c, as applicable~~.

Requirement Number	Lower VSL	Moderate VSL	High VSL	Severe VSL
R2	Entity has Protection System components in a condition-based PSMP, but documentation to support ~~Partially-Monitored Protection System classification or Fully-Monitored Protection System classification~~the monitoring attributes used to determine relevant intervals is incomplete on no more than 5% of the Protection System components maintained according to Tables ~~1b and 1c.~~1-1 through 1-5.	Entity has Protection System elements in a condition-based PSMP, but documentation to support ~~Partially-Monitored Protection System classification or Fully-Monitored Protection System classification~~monitoring attributes used to determine relevant intervals is incomplete on more than 5%, but 10% or less, of the Protection System components maintained according to Tables ~~1b and 1c.~~1-1 through 1-5.	Entity has Protection System elements in a condition-based PSMP, but documentation to support ~~Partially-Monitored Protection System classification or Fully-Monitored Protection System classification~~monitoring attributes used to determine relevant intervals is incomplete on more than 10%, but 15% or less, of the Protection System components maintained according to Tables ~~1b and 1c.~~1-1 through 1-5.	Entity has Protection System elements in a condition-based PSMP, but documentation to support ~~Partially-Monitored Protection System classification or Fully-Monitored Protection System classification~~monitoring attributes used to determine relevant intervals is incomplete on more than 15% of the Protection System components maintained according to Tables ~~1b and 1c~~1-1 through 1-5.
R3	Entity has Protection System elements in a performance-based PSMP but has: 1) Failed to reduce countable events to less than 4% within three years~~.~~ ~~-or-~~ OR 2) Failed to annually document program activities, results, maintenance dates, or countable events for 5% or less of components in any individual segment ~~-or-~~ OR 3) Maintained a segment with 54-59 components or containing different manufacturers.	NA	Entity has Protection System elements in a performance-based PSMP but has failed to reduce countable events to less than 4% within four years.	Entity has Protection System components in a performance-based PSMP but has: 1) Failed to reduce countable events to less than 4% within five years~~.~~ ~~-or-~~ OR 2) Failed to annually document program activities, results, maintenance dates, or countable events for over 5% of components in any individual segment~~.~~ ~~-or-~~ OR 3) Maintained a segment with less than 54 components~~.~~ ~~-or-~~

Requirement Number	Lower VSL	Moderate VSL	High VSL	Severe VSL
				OR 4) Failed to ~~annually~~: • Annually update the list of components, • Perform maintenance on the greater of 5% of the segment population or 3 components, ~~or~~ • Annually analyze the program activities and results for each segment.
R4	Entity has failed to complete scheduled program on 5% or less of total Protection System components. OR Entity has failed to initiate resolution on 5% or less of identified maintenance-correctable issues.	Entity has failed to complete scheduled program on greater than 5%, but no more than 10% of total Protection System components~~.~~ OR Entity has failed to initiate resolution on greater than 5%, but no more than 10% of identified maintenance-correctable issues.	Entity has failed to complete scheduled program on greater than 10%, but no more than 15% of total Protection System components~~.~~ OR Entity has failed to initiate resolution on greater than 10%, but no more than 15% of identified.	Entity has failed to complete scheduled program on greater than 15% of total Protection System components~~.~~ ~~or~~ OR Entity has failed to initiate resolution ~~of~~on greater than 15% of identified maintenance-correctable issues.

E. Regional ~~Differences~~Variances

None

F. Supplemental Reference Documents

The following documents present a detailed discussion about determination of maintenance intervals and other useful information regarding establishment of a maintenance program.

1. PRC-005-2 Protection System Maintenance Supplementary Reference — July 2009.
2. NERC Protection System Maintenance Standard PRC-005-2 FREQUENTLY ASKED QUESTIONS — Practical Compliance and Implementation DRAFT 1.0 — June 2009

Version History

Version	Date	Action	Change Tracking
2	TBD	Complete revision, absorbing maintenance requirements from PRC-005-1, PRC-008-0, PRC-011-0, PRC-017	Complete revision

~~Table 1a — Time-Based Maintenance — Level 1 Monitoring~~

~~Maximum Allowable Testing Intervals and Maintenance Activities for Unmonitored Protection System Components~~

~~**General Description:** Protection System components which do not have self-monitoring alarms, or if self-monitoring alarms are available, the alarms are not transmitted to a location where action can be taken for alarmed failures.~~

~~**General Maintenance Requirements:** Perform maintenance activities listed and initiate necessary corrective actions in accordance with Requirement R4.~~

Table 1-1

Component Type - Protective Relay

Note: Table requirements apply to all components of Protection Systems, UVLS and UFLS Systems, and SPSs except as noted.

~~Type of Protection System~~ Component Attributes	Maximum Maintenance Interval	~~Maintenance~~ Activities
~~Protective Relays~~Any unmonitored protective relay not having all the monitoring attributes of a category below.	6 ~~Calendar Years~~calendar years	~~Test and calibrate the relays (other than microprocessor relays) with simulated electrical inputs. (Note 1)~~ Verify that settings are as specified ~~.~~ For non-microprocessor relays: • Test and calibrate For microprocessor relays~~, check~~: • Verify operation of the relay inputs and outputs that are essential to proper functioning of the Protection System. • ~~For microprocessor relays, verify~~Verify acceptable measurement of power system input values.
~~Voltage and Current Sensing Inputs to Protective Relays and associated circuitry~~	~~12 Calendar Years~~	~~Verify proper functioning of the current and voltage signals necessary for Protection System operation from the voltage and current sensing devices to the protective relays.~~

~~**Control and trip circuits with electromechanical trip or auxiliary contacts (except for**~~ Monitored microprocessor ~~**relays, UFLS**~~protective relay with the following:: • Internal self diagnosis and alarming. • Voltage and/or current waveform sampling three or ~~**UVLS)**~~more times per power cycle, and conversion of samples to numeric values for measurement calculations by microprocessor electronics that are also performing self monitoring and alarming (see Table 2). • Alarming for power supply failure (see Table 2).	~~6 Calendar Years~~12 calendar years	~~Perform a complete functional trip test that includes all sections~~Verify: • Settings are as specified. • Operation of the ~~Protection System control~~relay inputs and ~~trip circuits, including all electromechanical trip and auxiliary contacts~~outputs that are essential to proper functioning of the Protection System. • Acceptable measurement of power system input values.
~~**Control and trip circuits with unmonitored solid-state trip or auxiliary contacts (except for UFLS or UVLS)**~~Monitored microprocessor protective relay with preceding row attributes and the following: • Ac measurements are continuously verified by comparison to an independent ac measurement source, with alarming for excessive error. (See Table 2) • Some or all binary or status inputs and control outputs are monitored by a process that continuously demonstrates ability to perform as designed, with alarming for failure. (See Table 2) • Alarming for change of settings. (See Table 2)	12 ~~**Calendar Years**~~calendar years	~~Perform a complete functional trip test that includes all sections of~~Verify only the ~~Protection System control~~unmonitored relay inputs and ~~trip circuits, including all solid-state trip and auxiliary contacts (e.g. paths with no moving parts), devices, and connections~~outputs that are essential to proper functioning of the Protection System.

~~Control and trip circuits with electromechanical trip or auxiliary (UFLS/UVLS Systems Only)~~	~~6 Calendar Years~~	~~Perform a complete functional trip test that includes all sections of the Protection System control and trip circuits, including all electromechanical trip and auxiliary contacts essential to proper functioning of the Protection System, except .that verification does not require actual tripping of circuit breakers or interrupting devices.~~
~~Control and trip circuits with unmonitored solid-state trip or auxiliary contacts (UFLS/UVLS Systems Only)~~	~~12 Calendar Years~~	~~Perform a complete functional trip test that includes all sections of the Protection System control and trip circuit, including all solid-state trip and auxiliary contacts (e.g. paths with no moving parts), devices, and connections essential to proper functioning of the Protection System, except that verification does not require actual tripping of circuit breakers or interrupting devices.~~

~~Table 1a — Time-Based Maintenance — Level 1 Monitoring~~

~~Maximum Allowable Testing Intervals and Maintenance Activities for Unmonitored Protection System Components~~

~~**General Description:** Protection System components which do not have self-monitoring alarms, or if self-monitoring alarms are available, the alarms are not transmitted to a location where action can be taken for alarmed failures.~~

~~**General Maintenance Requirements:** Perform maintenance activities listed and initiate necessary corrective actions in accordance with Requirement R4.~~

Table 1-1

Component Type - Protective Relay

Note: Table requirements apply to all components of Protection Systems, UVLS and UFLS Systems, and SPSs except as noted.

~~Type of Protection System~~ Component Attributes	Maximum Maintenance Interval	~~Maintenance~~ Activities
~~Protective Relays~~Any unmonitored protective relay not having all the monitoring attributes of a category below.	6 ~~Calendar Years~~calendar years	~~Test and calibrate the relays (other than microprocessor relays) with simulated electrical inputs. (Note 1)~~ Verify that settings are as specified ~~.~~ For non-microprocessor relays: • Test and calibrate For microprocessor relays~~, check~~: • Verify operation of the relay inputs and outputs that are essential to proper functioning of the Protection System. • ~~For microprocessor relays, verify~~Verify acceptable measurement of power system input values.
~~Station dc Supply (used only for UVLS or UFLS)~~	~~(when the associated UVLS or UFLS system is maintained)~~	~~Verify proper voltage of the dc supply.~~

~~Table 1a — Time-Based Maintenance — Level 1 Monitoring~~

~~Maximum Allowable Testing Intervals and Maintenance Activities for Unmonitored Protection System Components~~

~~**General Description:** Protection System components which do not have self-monitoring alarms, or if self-monitoring alarms are available, the alarms are not transmitted to a location where action can be taken for alarmed failures.~~

~~**General Maintenance Requirements:** Perform maintenance activities listed and initiate necessary corrective actions in accordance with Requirement R4.~~

Table 1-1

Component Type - Protective Relay

Note: Table requirements apply to all components of Protection Systems, UVLS and UFLS Systems, and SPSs except as noted.

~~Type of Protection System~~ Component Attributes	Maximum Maintenance Interval	~~Maintenance~~ Activities
~~Protective Relays~~Any unmonitored protective relay not having all the monitoring attributes of a category below.	6 ~~Calendar Years~~calendar years	~~Test and calibrate the relays (other than microprocessor relays) with simulated electrical inputs. (Note 1)~~ Verify that settings are as specified ~~.~~ For non-microprocessor relays: • Test and calibrate For microprocessor relays~~, check~~: • Verify operation of the relay inputs and outputs that are essential to proper functioning of the Protection System. • ~~For microprocessor relays, verify~~Verify acceptable measurement of power system input values.
~~Station dc supply~~	~~18 Calendar Months~~	~~Verify:~~ ~~• State of charge of the individual battery cell/units~~ ~~• Float voltage of battery charger~~ ~~• Battery continuity~~ ~~• Battery terminal connection resistance~~ ~~• Battery cell-to-cell connection resistance~~ ~~Inspect:~~ ~~• Cell condition of all individual battery cells where cells are visible – or measure battery cell/unit internal ohmic values where the cells are not visible~~ ~~• Physical condition of battery rack~~ ~~• The condition of non-battery-based dc supply~~

~~Table 1a — Time-Based Maintenance — Level 1 Monitoring~~ ~~Maximum Allowable Testing Intervals and Maintenance Activities for Unmonitored Protection System Components~~ ~~**General Description:** Protection System components which do not have self-monitoring alarms, or if self-monitoring alarms are available, the alarms are not transmitted to a location where action can be taken for alarmed failures.~~ ~~**General Maintenance Requirements:** Perform maintenance activities listed and initiate necessary corrective actions in accordance with Requirement R4.~~ **Table 1-1** **Component Type - Protective Relay** **Note:** Table requirements apply to all components of Protection Systems, UVLS and UFLS Systems, and SPSs except as noted.		
~~**Type of Protection System**~~ **Component Attributes**	**Maximum Maintenance Interval**	~~**Maintenance**~~ **Activities**
~~**Protective Relays**~~Any unmonitored protective relay not having all the monitoring attributes of a category below.	6 ~~**Calendar Years**~~calendar years	~~Test and calibrate the relays (other than microprocessor relays) with simulated electrical inputs. (Note 1)~~ Verify that settings are as specified ~~.~~ For non-microprocessor relays: • Test and calibrate For microprocessor relays~~, check~~: • Verify operation of the relay inputs and outputs that are essential to proper functioning of the Protection System. • ~~For microprocessor relays, verify~~Verify acceptable measurement of power system input values.
~~Station dc supply (that has as a component any type of battery)~~	~~3 Calendar Months~~	~~Check:~~ ~~• Electrolyte level (excluding valve-regulated lead acid batteries)~~ ~~• Station dc supply voltage~~ ~~• For unintentional grounds~~

~~Table 1a — Time-Based Maintenance — Level 1 Monitoring~~ ~~Maximum Allowable Testing Intervals and Maintenance Activities for Unmonitored Protection System Components~~ ~~General Description: Protection System components which do not have self-monitoring alarms, or if self-monitoring alarms are available, the alarms are not transmitted to a location where action can be taken for alarmed failures.~~ ~~General Maintenance Requirements: Perform maintenance activities listed and initiate necessary corrective actions in accordance with Requirement R4.~~ Table 1-1 Component Type - Protective Relay Note: Table requirements apply to all components of Protection Systems, UVLS and UFLS Systems, and SPSs except as noted.		
~~Type of Protection System~~ Component Attributes	Maximum Maintenance Interval	~~Maintenance~~ Activities
~~Protective Relays~~Any unmonitored protective relay not having all the monitoring attributes of a category below.	6 ~~Calendar Years~~calendar years	~~Test and calibrate the relays (other than microprocessor relays) with simulated electrical inputs. (Note 1)~~ Verify that settings are as specified ~~.~~ For non-microprocessor relays: • Test and calibrate For microprocessor relays~~, check~~: • Verify operation of the relay inputs and outputs that are essential to proper functioning of the Protection System. • ~~For microprocessor relays, verify~~Verify acceptable measurement of power system input values.
~~Station dc supply (that has as a component Valve Regulated Lead-Acid batteries)~~	~~3 Calendar Years~~ ~~– or –~~ ~~3 Calendar Months~~	~~Verify that the station battery can perform as designed by conducting a performance or service capacity test of the entire battery bank. (3 calendar years)~~ ~~- or -~~ ~~Verify that the station battery can perform as designed by evaluating the measured cell/unit internal ohmic values to station battery baseline. (3 months)~~

~~Table 1a — Time-Based Maintenance — Level 1 Monitoring~~

~~Maximum Allowable Testing Intervals and Maintenance Activities for Unmonitored Protection System Components~~

~~**General Description:** Protection System components which do not have self-monitoring alarms, or if self-monitoring alarms are available, the alarms are not transmitted to a location where action can be taken for alarmed failures.~~

~~**General Maintenance Requirements:** Perform maintenance activities listed and initiate necessary corrective actions in accordance with Requirement R4.~~

Table 1-1

Component Type - Protective Relay

Note: Table requirements apply to all components of Protection Systems, UVLS and UFLS Systems, and SPSs except as noted.

~~Type of Protection System~~ Component Attributes	Maximum Maintenance Interval	~~Maintenance~~ Activities
~~**Protective Relays**~~Any unmonitored protective relay not having all the monitoring attributes of a category below.	6 ~~**Calendar Years**~~calendar years	~~Test and calibrate the relays (other than microprocessor relays) with simulated electrical inputs. (Note 1)~~ Verify that settings are as specified ~~.~~ For non-microprocessor relays: • Test and calibrate For microprocessor relays~~, check~~: • Verify operation of the relay inputs and outputs that are essential to proper functioning of the Protection System. • ~~For microprocessor relays, verify~~Verify acceptable measurement of power system input values.
~~Station dc supply (that has as a component Vented Lead-Acid Batteries)~~	~~6 Calendar Years~~ ~~– or –~~ ~~18 Calendar Months~~	~~Verify that the station battery can perform as designed by conducting a performance, service, or modified performance capacity test of the entire battery bank. (6 calendar years)~~ ~~– or –~~ ~~Verify that the station battery can perform as designed by evaluating the measured cell/unit internal ohmic values to station battery baseline. (18 Months)~~
~~Station dc supply (that has as a component Nickel-Cadmium batteries)~~	~~6 Calendar Years~~	~~Verify that the substation battery can perform as designed by conducting a performance service, or modified performance capacity test of the entire battery bank.~~

~~Table 1a — Time-Based Maintenance — Level 1 Monitoring~~ ~~Maximum Allowable Testing Intervals and Maintenance Activities for Unmonitored Protection System Components~~ ~~**General Description:** Protection System components which do not have self-monitoring alarms, or if self-monitoring alarms are available, the alarms are not transmitted to a location where action can be taken for alarmed failures.~~ ~~**General Maintenance Requirements:** Perform maintenance activities listed and initiate necessary corrective actions in accordance with Requirement R4.~~ **Table 1-1** **Component Type - Protective Relay** **Note:** Table requirements apply to all components of Protection Systems, UVLS and UFLS Systems, and SPSs except as noted.		
~~**Type of Protection System**~~ **Component Attributes**	**Maximum Maintenance Interval**	~~**Maintenance**~~ **Activities**
~~**Protective Relays**~~Any unmonitored protective relay not having all the monitoring attributes of a category below.	6 ~~**Calendar Years**~~calendar years	~~Test and calibrate the relays (other than microprocessor relays) with simulated electrical inputs. (Note 1)~~ Verify that settings are as specified ~~.~~ For non-microprocessor relays: • Test and calibrate For microprocessor relays~~, check~~: • Verify operation of the relay inputs and outputs that are essential to proper functioning of the Protection System. • ~~For microprocessor relays, verify~~Verify acceptable measurement of power system input values.
~~Station dc supply (battery is not used)~~	~~6 Calendar Years~~	~~Verify that the dc supply can perform as designed when the ac power from the grid is not present.~~

~~Table 1a — Time-Based Maintenance — Level 1 Monitoring~~ ~~Maximum Allowable Testing Intervals and Maintenance Activities for Unmonitored Protection System Components~~ ~~General Description: Protection System components which do not have self-monitoring alarms, or if self-monitoring alarms are available, the alarms are not transmitted to a location where action can be taken for alarmed failures.~~ ~~General Maintenance Requirements: Perform maintenance activities listed and initiate necessary corrective actions in accordance with Requirement R4.~~ Table 1-1 Component Type - Protective Relay Note: Table requirements apply to all components of Protection Systems, UVLS and UFLS Systems, and SPSs except as noted.		
~~Type of Protection System~~ Component Attributes	Maximum Maintenance Interval	~~Maintenance~~ Activities
~~Protective Relays~~Any unmonitored protective relay not having all the monitoring attributes of a category below.	6 ~~Calendar Years~~calendar years	~~Test and calibrate the relays (other than microprocessor relays) with simulated electrical inputs. (Note 1)~~ Verify that settings are as specified ~~.~~ For non-microprocessor relays: • Test and calibrate For microprocessor relays~~, check~~: • Verify operation of the relay inputs and outputs that are essential to proper functioning of the Protection System. • ~~For microprocessor relays, verify~~Verify acceptable measurement of power system input values.
~~Station dc Supply (battery is not used)~~	~~18 Calendar Months~~	~~Verify proper voltage of the station dc supply.~~ ~~Verify that no unintentional dc supply grounds are presen t.~~ ~~Perform a visual inspection, of all components of the station dc supply to verify that the physical condition of the station dc supply is as desired and any visual inspection if required by the manufacturer on the condition of the dc supply that is the source of dc power when ac power is unavailable.~~ ~~Verify where applicable the proper voltage level of each component of the station dc supply.~~ ~~Verify the correct operation of ac powered dc power supplies.~~ ~~Verify the continuity of all circuit connections that can be affected by wear or corrosion. Inspect all circuit connections that can be affected by wear and corrosion~~

~~Table 1a — Time-Based Maintenance — Level 1 Monitoring~~

~~Maximum Allowable Testing Intervals and Maintenance Activities for Unmonitored Protection System Components~~

~~**General Description:** Protection System components which do not have self-monitoring alarms, or if self-monitoring alarms are available, the alarms are not transmitted to a location where action can be taken for alarmed failures.~~

~~**General Maintenance Requirements:** Perform maintenance activities listed and initiate necessary corrective actions in accordance with Requirement R4.~~

Table 1-1

Component Type - Protective Relay

Note: Table requirements apply to all components of Protection Systems, UVLS and UFLS Systems, and SPSs except as noted.

~~Type of Protection System~~ Component Attributes	Maximum Maintenance Interval	~~Maintenance~~ Activities
~~Protective Relays~~Any unmonitored protective relay not having all the monitoring attributes of a category below.	6 ~~Calendar Years~~calendar years	~~Test and calibrate the relays (other than microprocessor relays) with simulated electrical inputs. (Note 1)~~ Verify that settings are as specified ~~.~~ For non-microprocessor relays: • Test and calibrate For microprocessor relays~~, check~~: • Verify operation of the relay inputs and outputs that are essential to proper functioning of the Protection System. • ~~For microprocessor relays, verify~~Verify acceptable measurement of power system input values.
~~Associated communications systems~~	~~3 Calendar Months~~	~~Verify that the Protection System communications system is functional.~~
~~Associated communications systems~~	~~6 Calendar Years~~	~~Verify that the performance of the channel and the quality of the channel meets performance criteria, such as via measurement of signal level, reflected power, or data error rate.~~ ~~Verify proper functioning of communications equipment inputs and outputs that are essential to proper functioning of the Protection System.~~ ~~Verify the signals to/from the associated protective relay(s).~~

~~Table 1a — Time-Based Maintenance — Level 1 Monitoring~~

~~Maximum Allowable Testing Intervals and Maintenance Activities for Unmonitored Protection System Components~~

~~**General Description:** Protection System components which do not have self-monitoring alarms, or if self-monitoring alarms are available, the alarms are not transmitted to a location where action can be taken for alarmed failures.~~

~~**General Maintenance Requirements:** Perform maintenance activities listed and initiate necessary corrective actions in accordance with Requirement R4.~~

Table 1-1

Component Type - Protective Relay

Note: Table requirements apply to all components of Protection Systems, UVLS and UFLS Systems, and SPSs except as noted.

~~Type of Protection System~~ Component Attributes	Maximum Maintenance Interval	~~Maintenance~~ Activities
~~Protective Relays~~Any unmonitored protective relay not having all the monitoring attributes of a category below.	6 ~~Calendar Years~~calendar years	~~Test and calibrate the relays (other than microprocessor relays) with simulated electrical inputs. (Note 1)~~ Verify that settings are as specified ~~.~~ For non-microprocessor relays: • Test and calibrate For microprocessor relays~~, check~~: • Verify operation of the relay inputs and outputs that are essential to proper functioning of the Protection System. • ~~For microprocessor relays, verify~~Verify acceptable measurement of power system input values.
~~UVLS and UFLS relays that comprise a protection scheme distributed over the power system~~	~~6 Calendar Years~~	~~Test and calibrate the relays (other than microprocessor relays) with simulated electrical inputs. (Note 1)~~ ~~Verify proper functioning of the relay trip outputs.~~ ~~For microprocessor relays verify the proper functioning of the A/D converters.~~ ~~Verify that settings are as specified.~~

~~Table 1a — Time-Based Maintenance — Level 1 Monitoring~~ ~~Maximum Allowable Testing Intervals and Maintenance Activities for Unmonitored Protection System Components~~ ~~**General Description:** Protection System components which do not have self-monitoring alarms, or if self-monitoring alarms are available, the alarms are not transmitted to a location where action can be taken for alarmed failures.~~ ~~**General Maintenance Requirements:** Perform maintenance activities listed and initiate necessary corrective actions in accordance with Requirement R4.~~ **Table 1-1** **Component Type - Protective Relay** **Note:** Table requirements apply to all components of Protection Systems, UVLS and UFLS Systems, and SPSs except as noted.		
~~**Type of Protection System**~~ **Component Attributes**	**Maximum Maintenance Interval**	~~**Maintenance**~~ **Activities**
~~**Protective Relays**~~Any unmonitored protective relay not having all the monitoring attributes of a category below.	6 ~~**Calendar Years**~~calendar years	~~Test and calibrate the relays (other than microprocessor relays) with simulated electrical inputs. (Note 1)~~ Verify that settings are as specified ~~.~~ For non-microprocessor relays: • Test and calibrate For microprocessor relays~~, check~~: • Verify operation of the relay inputs and outputs that are essential to proper functioning of the Protection System. • ~~For microprocessor relays, verify~~Verify acceptable measurement of power system input values.
~~Relay sensing for Centralized UFLS or UVLS systems UVLS and UFLS relays that comprise a protection scheme distributed over the power system~~	~~See Maintenance Activities~~	~~Perform all of the Maintenance activities listed above as established for components of the UFLS or UVLS systems at the intervals established for those individual components. The output action may be breaker tripping, or other control action that must be verified, but may be verified in overlapping segments. A grouped output control action need be verified only once within the specified time interval, but all of the UFLS or UVLS components whose operation leads to that control action must each be verified.~~

~~Table 1a — Time-Based Maintenance — Level 1 Monitoring~~

~~Maximum Allowable Testing Intervals and Maintenance Activities for Unmonitored Protection System Components~~

~~**General Description:** Protection System components which do not have self-monitoring alarms, or if self-monitoring alarms are available, the alarms are not transmitted to a location where action can be taken for alarmed failures.~~

~~**General Maintenance Requirements:** Perform maintenance activities listed and initiate necessary corrective actions in accordance with Requirement R4.~~

Table 1-1

Component Type - Protective Relay

Note: Table requirements apply to all components of Protection Systems, UVLS and UFLS Systems, and SPSs except as noted.

~~Type of Protection System~~ Component Attributes	Maximum Maintenance Interval	~~Maintenance~~ Activities
~~Protective Relays~~Any unmonitored protective relay not having all the monitoring attributes of a category below.	6 ~~Calendar Years~~calendar years	~~Test and calibrate the relays (other than microprocessor relays) with simulated electrical inputs. (Note 1)~~ Verify that settings are as specified ~~.~~ For non-microprocessor relays: • Test and calibrate For microprocessor relays~~, check~~: • Verify operation of the relay inputs and outputs that are essential to proper functioning of the Protection System. • ~~For microprocessor relays, verify~~Verify acceptable measurement of power system input values.

~~SPS~~	~~See Maintenance Activities~~	~~Perform all of the Maintenance activities listed above as established for components of the SPS at the intervals established for those individual components. The output action may be breaker tripping, or other control action that must be verified, but may be verified in overlapping segments. A grouped output control action need be verified only once within the specified time interval, but all of the SPS components whose operation leads to that control action must each be verified.~~

~~Table 1b — Condition-Based Maintenance - Level 2 Monitoring~~ ~~Maximum Allowable Testing Intervals and Maintenance Activities for Partially Monitored Protection System Components~~ ~~General Description: Protection System components whose conditions or alarms are automatically provided daily (or more frequently) to a location where action can be taken for alarmed failures. Detected maintenance-correctable issues for Level 2 Monitored Protection Systems must be reported within 1 day or less of the maintenance-correctable issue occurring, to a location where action can be taken to initiate resolution of the maintenance-correctable issue. Level 2 monitoring includes all monitoring attributes as listed below for the individual type of component.~~ ~~General Maintenance Requirements: Perform maintenance activities listed and initiate necessary corrective actions in accordance with Requirement R4.~~Table 1-2 Component Type - Communications Systems Note: Table requirements apply to all components of Protection Systems, UVLS and UFLS Systems, and SPSs except as noted.			
~~Type of Protection System Component~~	~~Level 2 Monitoring~~Component Attributes ~~for Component~~	Maximum Maintenance Interval	~~Maintenance~~ Activities
~~Protective Relays~~	~~Includes~~ ~~• Internal self diagnosis and alarm capability~~ ~~• Alarm must assert for power supply failures~~ ~~• Input voltage or current waveform sampling three or more times per power cycle~~ ~~Conversion of samples to numeric values for measurement calculations by microprocessor electronics that are also performing self diagnosis and alarming~~Any unmonitored communications system necessary for correct operation of protective functions, and not having all the monitoring attributes of a category below.	~~12 Calendar Years~~ 3 calendar months	Verify that the ~~status of relays is normal with no alarms indicated.~~ ~~Verify acceptable measurement of power~~communications system ~~input values.~~ ~~For microprocessor relays, check the relay inputs and outputs that are essential to proper functioning of the Protection System.~~ ~~Verify that settings are as specified.~~ ~~Verify that the relay alarms will be received at the location where action can be taken.~~ ~~Verify correct operation of output actions that are used for tripping~~is functional.

~~Table 1b — Condition-Based Maintenance - Level 2 Monitoring~~

~~Maximum Allowable Testing Intervals and Maintenance Activities for Partially Monitored Protection System Components~~

~~**General Description:** Protection System components whose conditions or alarms are automatically provided daily (or more frequently) to a location where action can be taken for alarmed failures. Detected maintenance-correctable issues for Level 2 Monitored Protection Systems must be reported within 1 day or less of the maintenance-correctable issue occurring, to a location where action can be taken to initiate resolution of the maintenance-correctable issue. Level 2 monitoring includes all monitoring attributes as listed below for the individual type of component.~~

~~**General Maintenance Requirements:** Perform maintenance activities listed and initiate necessary corrective actions in accordance with Requirement R4.~~**Table 1-2**

Component Type - Communications Systems

Note: Table requirements apply to all components of Protection Systems, UVLS and UFLS Systems, and SPSs except as noted.

~~Type of Protection System Component~~	~~Level 2 Monitoring~~**Component Attributes** ~~for Component~~	**Maximum Maintenance Interval**	~~Maintenance~~ **Activities**
~~Protective Relays~~	~~Includes~~ ~~• Internal self diagnosis and alarm capability~~ ~~• Alarm must assert for power supply failures~~ ~~• Input voltage or current waveform sampling three or more times per power cycle~~ ~~Conversion of samples to numeric values for measurement calculations by microprocessor electronics that are also performing self diagnosis and alarming~~Any unmonitored communications system necessary for correct operation of protective functions, and not having all the monitoring attributes of a category below.	~~12 Calendar Years~~ 3 calendar months	Verify that the ~~status of relays is normal with no alarms indicated.~~ ~~Verify acceptable measurement of power~~communications system ~~input values.~~ ~~For microprocessor relays, check the relay inputs and outputs that are essential to proper functioning of the Protection System.~~ ~~Verify that settings are as specified.~~ ~~Verify that the relay alarms will be received at the location where action can be taken.~~ ~~Verify correct operation of output actions that are used for tripping~~is functional.
~~Voltage and Current Sensing Inputs to Protective Relays and associ~~	~~No Level 2 monitoring attributes are defined – use Level 1 Maintenance Activities~~	~~12 Calendar Years~~	~~Verify the proper functioning of current and voltage circuit signals necessary for Protection System operation from the voltage and current sensing devices to the protective relays.~~

~~Table 1b — Condition-Based Maintenance - Level 2 Monitoring~~

~~Maximum Allowable Testing Intervals and Maintenance Activities for Partially Monitored Protection System Components~~

~~**General Description:** Protection System components whose conditions or alarms are automatically provided daily (or more frequently) to a location where action can be taken for alarmed failures. Detected maintenance-correctable issues for Level 2 Monitored Protection Systems must be reported within 1 day or less of the maintenance-correctable issue occurring, to a location where action can be taken to initiate resolution of the maintenance-correctable issue. Level 2 monitoring includes all monitoring attributes as listed below for the individual type of component.~~

~~**General Maintenance Requirements:** Perform maintenance activities listed and initiate necessary corrective actions in accordance with Requirement R4.~~**Table 1-2**

Component Type - Communications Systems

Note: Table requirements apply to all components of Protection Systems, UVLS and UFLS Systems, and SPSs except as noted.

~~Type of Protection System Component~~	~~Level 2 Monitoring~~**Component** **Attributes** ~~for Component~~	**Maximum Maintenance Interval**	~~Maintenance~~ **Activities**
~~Protective Relays~~	~~Includes~~ ~~• Internal self diagnosis and alarm capability~~ ~~• Alarm must assert for power supply failures~~ ~~• Input voltage or current waveform sampling three or more times per power cycle~~ ~~Conversion of samples to numeric values for measurement calculations by microprocessor electronics that are also performing self diagnosis and alarming~~Any unmonitored communications system necessary for correct operation of protective functions, and not having all the monitoring attributes of a category below.	~~12 Calendar Years~~ 3 calendar months	Verify that the ~~status of relays is normal with no alarms indicated.~~ ~~Verify acceptable measurement of power~~communications system ~~input values.~~ ~~For microprocessor relays, check the relay inputs and outputs that are essential to proper functioning of the Protection System.~~ ~~Verify that settings are as specified.~~ ~~Verify that the relay alarms will be received at the location where action can be taken.~~ ~~Verify correct operation of output actions that are used for tripping~~is functional.
~~Control Circuitry (Trip Coils and Auxiliary Relays)~~	~~Monitoring and alarming of continuity of trip circuits(s)~~	~~6 Calendar Years~~	~~Verify that each breaker trip coil, each auxiliary relay, and each lockout relay is electrically operated within this time interval.~~

~~Control Circuitry (Trip Circuits) (except for UFLS/UVLS)~~		6 calendar years	~~Monitoring of Protection System component inputs, outputs, and connections with reporting of monitoring alarms to a location where action can be taken~~ ~~**Connection paths using electronic signals or data messages are monitored by periodic signal changes or messages that verify ability to convey Protection System operating values**~~Verify that the channel meets performance criteria such as signal level, reflected power, or data error rate. Verify essential signals to and from other Protection System components.	~~12 Calendar Years~~	~~Verify that the alarms will be received at the location where action can be taken.~~
~~Control and trip circuitry~~	~~Monitoring of the continuity of breaker trip circuits along with the presence of tripping voltage supply all the way from relay terminals (or from inside the relay) through to the trip coil(s), including any auxiliary contacts essential to proper Protection System operation. If a trip circuit comprises multiple paths, each of the paths must be monitored, including monitoring of the operating coil circuit(s) and the tripping circuits of auxiliary tripping relays and lockout relays. Alarming for loss of continuity or dc supply for trip circuits is reported to a location where action can be taken.~~Any communications system with continuous monitoring or periodic automated testing for the presence of the channel function, and alarming for loss of function. (See Table 2)	12 ~~Calendar Years~~ calendar years	Verify that the ~~alarms will be received at the location where action can be taken~~channel meets performance criteria such as signal level, reflected power, or data error rate. Verify essential signals to and from other Protection System components.		

~~Table 1b — Condition-Based Maintenance - Level 2 Monitoring~~

~~Maximum Allowable Testing Intervals and Maintenance Activities for Partially Monitored Protection System Components~~

~~**General Description:** Protection System components whose conditions or alarms are automatically provided daily (or more frequently) to a location where action can be taken for alarmed failures. Detected maintenance-correctable issues for Level 2 Monitored Protection Systems must be reported within 1 day or less of the maintenance-correctable issue occurring, to a location where action can be taken to initiate resolution of the maintenance-correctable issue. Level 2 monitoring includes all monitoring attributes as listed below for the individual type of component.~~

~~**General Maintenance Requirements:** Perform maintenance activities listed and initiate necessary corrective actions in accordance with Requirement R4.~~**Table 1-2**

Component Type - Communications Systems

Note: Table requirements apply to all components of Protection Systems, UVLS and UFLS Systems, and SPSs except as noted.

~~Type of Protection System Component~~	~~Level 2 Monitoring~~**Component Attributes** ~~for Component~~	**Maximum Maintenance Interval**	~~Maintenance~~ **Activities**
~~Protective Relays~~	~~Includes~~ ~~• Internal self diagnosis and alarm capability~~ ~~• Alarm must assert for power supply failures~~ ~~• Input voltage or current waveform sampling three or more times per power cycle~~ ~~Conversion of samples to numeric values for measurement calculations by microprocessor electronics that are also performing self diagnosis and alarming~~Any unmonitored communications system necessary for correct operation of protective functions, and not having all the monitoring attributes of a category below.	~~12 Calendar Years~~ 3 calendar months	Verify that the ~~status of relays is normal with no alarms indicated.~~ ~~Verify acceptable measurement of power~~communications system ~~input values.~~ ~~For microprocessor relays, check the relay inputs and outputs that are essential to proper functioning of the Protection System.~~ ~~Verify that settings are as specified.~~ ~~Verify that the relay alarms will be received at the location where action can be taken.~~ ~~Verify correct operation of output actions that are used for tripping~~is functional.
	~~Monitor and alarm for:~~ ~~• Station dc supply voltage~~ ~~• Unintentional dc grounds~~		

~~Table 1b — Condition-Based Maintenance - Level 2 Monitoring~~

~~Maximum Allowable Testing Intervals and Maintenance Activities for Partially Monitored Protection System Components~~

~~**General Description:** Protection System components whose conditions or alarms are automatically provided daily (or more frequently) to a location where action can be taken for alarmed failures. Detected maintenance-correctable issues for Level 2 Monitored Protection Systems must be reported within 1 day or less of the maintenance-correctable issue occurring, to a location where action can be taken to initiate resolution of the maintenance-correctable issue. Level 2 monitoring includes all monitoring attributes as listed below for the individual type of component.~~

~~**General Maintenance Requirements:** Perform maintenance activities listed and initiate necessary corrective actions in accordance with Requirement R4.~~**Table 1-2**

Component Type - Communications Systems

Note: Table requirements apply to all components of Protection Systems, UVLS and UFLS Systems, and SPSs except as noted.

~~Type of Protection System Component~~	~~Level 2 Monitoring~~**Component Attributes** ~~for Component~~	**Maximum Maintenance Interval**	~~Maintenance~~ **Activities**
~~Protective Relays~~	~~Includes~~ ~~• Internal self diagnosis and alarm capability~~ ~~• Alarm must assert for power supply failures~~ ~~• Input voltage or current waveform sampling three or more times per power cycle~~ ~~Conversion of samples to numeric values for measurement calculations by microprocessor electronics that are also performing self diagnosis and alarming~~Any unmonitored communications system necessary for correct operation of protective functions, and not having all the monitoring attributes of a category below.	~~12 Calendar Years~~ 3 calendar months	Verify that the ~~status of relays is normal with no alarms indicated.~~ ~~Verify acceptable measurement of power~~communications system ~~input values.~~ ~~For microprocessor relays, check the relay inputs and outputs that are essential to proper functioning of the Protection System.~~ ~~Verify that settings are as specified.~~ ~~Verify that the relay alarms will be received at the location where action can be taken.~~ ~~Verify correct operation of output actions that are used for tripping~~is functional.
~~Station dc supply~~	~~No Level 2 monitoring attributes are defined – use Level 1 Maintenance Activities~~	~~18 Calendar Months~~	~~Inspect:~~ ~~• Cell condition of individual battery cells where cells are visible, or measure battery cell/unit internal ohmic values where cells are not visible~~ ~~• Physical condition of battery rack~~ ~~• The condition of non-battery based dc supply~~

~~Table 1b — Condition-Based Maintenance - Level 2 Monitoring~~

~~Maximum Allowable Testing Intervals and Maintenance Activities for Partially Monitored Protection System Components~~

~~**General Description:** Protection System components whose conditions or alarms are automatically provided daily (or more frequently) to a location where action can be taken for alarmed failures. Detected maintenance-correctable issues for Level 2 Monitored Protection Systems must be reported within 1 day or less of the maintenance-correctable issue occurring, to a location where action can be taken to initiate resolution of the maintenance-correctable issue. Level 2 monitoring includes all monitoring attributes as listed below for the individual type of component.~~

~~**General Maintenance Requirements:** Perform maintenance activities listed and initiate necessary corrective actions in accordance with Requirement R4.~~**Table 1-2**

Component Type - Communications Systems

Note: Table requirements apply to all components of Protection Systems, UVLS and UFLS Systems, and SPSs except as noted.

~~Type of Protection System Component~~	~~Level 2 Monitoring~~**Component** **Attributes** ~~for Component~~	**Maximum Maintenance Interval**	~~Maintenance~~ **Activities**
~~Protective Relays~~	~~Includes~~ ~~• Internal self diagnosis and alarm capability~~ ~~• Alarm must assert for power supply failures~~ ~~• Input voltage or current waveform sampling three or more times per power cycle~~ ~~Conversion of samples to numeric values for measurement calculations by microprocessor electronics that are also performing self diagnosis and alarming~~Any unmonitored communications system necessary for correct operation of protective functions, and not having all the monitoring attributes of a category below.	~~12 Calendar Years~~ 3 calendar months	Verify that the ~~status of relays is normal with no alarms indicated.~~ ~~Verify acceptable measurement of power~~communications system ~~input values.~~ ~~For microprocessor relays, check the relay inputs and outputs that are essential to proper functioning of the Protection System.~~ ~~Verify that settings are as specified.~~ ~~Verify that the relay alarms will be received at the location where action can be taken.~~ ~~Verify correct operation of output actions that are used for tripping~~is functional.
~~Station dc supply~~ ~~(that has as a component Valve Regulated Lead~~	~~No Level 2 monitoring attributes defined – use Level 1 Maintenance Activities~~	~~3 Calendar Years~~ ~~- or -~~ ~~3 Calendar Months~~	~~Verify that the station battery can perform as designed by conducting a performance or service capacity test of the entire battery bank. (3 calendar years)~~ ~~- or -~~ ~~Verify that the station battery can perform as designed by evaluating the measured cell/unit internal ohmic values to station battery baseline. (3 months)~~

~~Table 1b — Condition-Based Maintenance - Level 2 Monitoring~~

~~Maximum Allowable Testing Intervals and Maintenance Activities for Partially Monitored Protection System Components~~

~~**General Description:** Protection System components whose conditions or alarms are automatically provided daily (or more frequently) to a location where action can be taken for alarmed failures. Detected maintenance-correctable issues for Level 2 Monitored Protection Systems must be reported within 1 day or less of the maintenance-correctable issue occurring, to a location where action can be taken to initiate resolution of the maintenance-correctable issue. Level 2 monitoring includes all monitoring attributes as listed below for the individual type of component.~~

~~**General Maintenance Requirements:** Perform maintenance activities listed and initiate necessary corrective actions in accordance with Requirement R4.~~**Table 1-2**

Component Type - Communications Systems

Note: Table requirements apply to all components of Protection Systems, UVLS and UFLS Systems, and SPSs except as noted.

~~Type of Protection System Component~~	~~Level 2 Monitoring~~**Component Attributes** ~~for Component~~	**Maximum Maintenance Interval**	~~Maintenance~~ **Activities**
~~Protective Relays~~	~~Includes~~ ~~• Internal self diagnosis and alarm capability~~ ~~• Alarm must assert for power supply failures~~ ~~• Input voltage or current waveform sampling three or more times per power cycle~~ ~~Conversion of samples to numeric values for measurement calculations by microprocessor electronics that are also performing self diagnosis and alarming~~Any unmonitored communications system necessary for correct operation of protective functions, and not having all the monitoring attributes of a category below.	~~12 Calendar Years~~ 3 calendar months	Verify that the ~~status of relays is normal with no alarms indicated.~~ ~~Verify acceptable measurement of power~~communications system ~~input values.~~ ~~For microprocessor relays, check the relay inputs and outputs that are essential to proper functioning of the Protection System.~~ ~~Verify that settings are as specified.~~ ~~Verify that the relay alarms will be received at the location where action can be taken.~~ ~~Verify correct operation of output actions that are used for tripping~~is functional.
~~Station dc supply (that has as a component Vented Lead-Acid batterie~~	~~No Level 2 monitoring attributes are defined. use Level 1 Maintenance Activities~~	~~6 Calendar Years~~ ~~– or –~~ ~~18 Calendar Months~~	~~Verify that the substation battery can perform as designed by conducting a performance service, or modified performance capacity test of the entire battery bank. (6 calendar years)~~ ~~– or –~~ ~~Verify that the station battery can perform as designed by evaluating the measured cell/unit internal ohmic values to station battery baseline. (18 Months)~~

~~Table 1b — Condition-Based Maintenance - Level 2 Monitoring~~ ~~Maximum Allowable Testing Intervals and Maintenance Activities for Partially Monitored Protection System Components~~ ~~General Description: Protection System components whose conditions or alarms are automatically provided daily (or more frequently) to a location where action can be taken for alarmed failures. Detected maintenance-correctable issues for Level 2 Monitored Protection Systems must be reported within 1 day or less of the maintenance-correctable issue occurring, to a location where action can be taken to initiate resolution of the maintenance-correctable issue. Level 2 monitoring includes all monitoring attributes as listed below for the individual type of component.~~ ~~General Maintenance Requirements: Perform maintenance activities listed and initiate necessary corrective actions in accordance with Requirement R4.~~Table 1-2 Component Type - Communications Systems Note: Table requirements apply to all components of Protection Systems, UVLS and UFLS Systems, and SPSs except as noted.			
~~Type of Protection System Component~~	~~Level 2 Monitoring~~Component Attributes ~~for Component~~	Maximum Maintenance Interval	~~Maintenance~~ Activities
~~Protective Relays~~	~~Includes~~ ~~• Internal self diagnosis and alarm capability~~ ~~• Alarm must assert for power supply failures~~ ~~• Input voltage or current waveform sampling three or more times per power cycle~~ ~~Conversion of samples to numeric values for measurement calculations by microprocessor electronics that are also performing self diagnosis and alarming~~Any unmonitored communications system necessary for correct operation of protective functions, and not having all the monitoring attributes of a category below.	~~12 Calendar Years~~ 3 calendar months	Verify that the ~~status of relays is normal with no alarms indicated.~~ ~~Verify acceptable measurement of power~~communications system ~~input values.~~ ~~For microprocessor relays, check the relay inputs and outputs that are essential to proper functioning of the Protection System.~~ ~~Verify that settings are as specified.~~ ~~Verify that the relay alarms will be received at the location where action can be taken.~~ ~~Verify correct operation of output actions that are used for tripping~~is functional.
~~Station dc supply (that has as a component Nickel-Cadmium batterie~~	~~No Level 2 monitoring attributes are defined – use Level 1 Maintenance Activities~~	~~6 Calendar Years~~	~~Verify that the substation battery can perform as designed by conducting a performance service, or modified performance capacity test of the entire battery bank.~~

Table 1b — Condition-Based Maintenance - Level 2 Monitoring

Maximum Allowable Testing Intervals and Maintenance Activities for Partially Monitored Protection System Components

General Description: Protection System components whose conditions or alarms are automatically provided daily (or more frequently) to a location where action can be taken for alarmed failures. Detected maintenance-correctable issues for Level 2 Monitored Protection Systems must be reported within 1 day or less of the maintenance-correctable issue occurring, to a location where action can be taken to initiate resolution of the maintenance-correctable issue. Level 2 monitoring includes all monitoring attributes as listed below for the individual type of component.

General Maintenance Requirements: Perform maintenance activities listed and initiate necessary corrective actions in accordance with Requirement R4.**Table 1-2**

Component Type - Communications Systems

Note: Table requirements apply to all components of Protection Systems, UVLS and UFLS Systems, and SPSs except as noted.

Type of Protection System Component	Level 2 MonitoringComponent Attributes for Component	Maximum Maintenance Interval	Maintenance Activities
Protective Relays	Includes • Internal self diagnosis and alarm capability • Alarm must assert for power supply failures • Input voltage or current waveform sampling three or more times per power cycle Conversion of samples to numeric values for measurement calculations by microprocessor electronics that are also performing self diagnosis and alarmingAny unmonitored communications system necessary for correct operation of protective functions, and not having all the monitoring attributes of a category below.	12 Calendar Years 3 calendar months	Verify that the status of relays is normal with no alarms indicated. Verify acceptable measurement of powercommunications system input values. For microprocessor relays, check the relay inputs and outputs that are essential to proper functioning of the Protection System. Verify that settings are as specified. Verify that the relay alarms will be received at the location where action can be taken. Verify correct operation of output actions that are used for trippingis functional.
Station dc Supply (battery is not used)	No Level 2 monitoring attributes are defined – use Level 1 Maintenance Activities	6 Calendar Years	Verify that the dc supply can perform as designed when ac power from the grid is not present.

~~Associated communications system~~	~~Monitoring and alarming of protection communications system by mechanisms that check for presence of the communications channel.~~	~~12 Calendar Years~~	~~Verify that~~ Any communications system with continuous monitoring or periodic automated testing for the performance of the channel ~~and the quality of the channel meets performance~~ using criteria~~,~~ such as ~~via measurement of~~ signal level, reflected power, or data error rate~~.~~ ~~Verify proper functioning of communications equipment inputs and outputs that are essential to proper functioning of the Protection System.~~ ~~Verify the signals to/from the associated protective relay(s).~~ ~~Verify proper functioning of alarm notification.~~, and alarming for excessive performance degradation. (See Table 2)	No periodic maintenance specified	None.

~~Table 1b — Condition-Based Maintenance - Level 2 Monitoring~~

~~Maximum Allowable Testing Intervals and Maintenance Activities for Partially Monitored Protection System Components~~

~~**General Description:** Protection System components whose conditions or alarms are automatically provided daily (or more frequently) to a location where action can be taken for alarmed failures. Detected maintenance-correctable issues for Level 2 Monitored Protection Systems must be reported within 1 day or less of the maintenance-correctable issue occurring, to a location where action can be taken to initiate resolution of the maintenance-correctable issue. Level 2 monitoring includes all monitoring attributes as listed below for the individual type of component.~~

~~**General Maintenance Requirements:** Perform maintenance activities listed and initiate necessary corrective actions in accordance with Requirement R4.~~**Table 1-2**

Component Type - Communications Systems

Note: Table requirements apply to all components of Protection Systems, UVLS and UFLS Systems, and SPSs except as noted.

~~Type of Protection System Component~~	~~Level 2 Monitoring~~**Component Attributes** ~~for Component~~	**Maximum Maintenance Interval**	~~Maintenance~~ **Activities**
~~Protective Relays~~	~~Includes~~ ~~• Internal self diagnosis and alarm capability~~ ~~• Alarm must assert for power supply failures~~ ~~• Input voltage or current waveform sampling three or more times per power cycle~~ ~~Conversion of samples to numeric values for measurement calculations by microprocessor electronics that are also performing self diagnosis and alarming~~Any unmonitored communications system necessary for correct operation of protective functions, and not having all the monitoring attributes of a category below.	~~12 Calendar Years~~ 3 calendar months	Verify that the ~~status of relays is normal with no alarms indicated.~~ ~~Verify acceptable measurement of power~~communications system ~~input values.~~ ~~For microprocessor relays, check the relay inputs and outputs that are essential to proper functioning of the Protection System.~~ ~~Verify that settings are as specified.~~ ~~Verify that the relay alarms will be received at the location where action can be taken.~~ ~~Verify correct operation of output actions that are used for tripping~~is functional.
~~UVLS and UFLS relays that comprise a protecti~~	~~Includes internal self diagnosis and alarm capability, which must assert for power supply failures~~ ~~Includes input voltage or current waveform sampling three~~		~~Verify the status of relays as in service with no alarms.~~ ~~Verify acceptable measurement of power system input values the proper function of the A/D converters (if included in relay)~~

Table 1b — Condition-Based Maintenance - Level 2 Monitoring

Maximum Allowable Testing Intervals and Maintenance Activities for Partially Monitored Protection System Components

General Description: Protection System components whose conditions or alarms are automatically provided daily (or more frequently) to a location where action can be taken for alarmed failures. Detected maintenance-correctable issues for Level 2 Monitored Protection Systems must be reported within 1 day or less of the maintenance-correctable issue occurring, to a location where action can be taken to initiate resolution of the maintenance-correctable issue. Level 2 monitoring includes all monitoring attributes as listed below for the individual type of component.

General Maintenance Requirements: Perform maintenance activities listed and initiate necessary corrective actions in accordance with Requirement R4.**Table 1-2**

Component Type - Communications Systems

Note: Table requirements apply to all components of Protection Systems, UVLS and UFLS Systems, and SPSs except as noted.

Type of Protection System Component	Level 2 MonitoringComponent Attributes for Component	Maximum Maintenance Interval	Maintenance Activities
Protective Relays	Includes • Internal self diagnosis and alarm capability • Alarm must assert for power supply failures • Input voltage or current waveform sampling three or more times per power cycle Conversion of samples to numeric values for measurement calculations by microprocessor electronics that are also performing self diagnosis and alarmingAny unmonitored communications system necessary for correct operation of protective functions, and not having all the monitoring attributes of a category below.	12 Calendar Years 3 calendar months	Verify that the status of relays is normal with no alarms indicated. Verify acceptable measurement of powercommunications system input values. For microprocessor relays, check the relay inputs and outputs that are essential to proper functioning of the Protection System. Verify that settings are as specified. Verify that the relay alarms will be received at the location where action can be taken. Verify correct operation of output actions that are used for trippingis functional.
Relay sensing for centralized UFLS or UVLS systems	See the attributes of Level 2 Monitoring forthe individual components of the SPS	See Maintenance Intervals for the individual components of the UFLS/UVLS	Perform all of the Maintenance activities listed above as established for components of the UFLS or UVLS systems at the intervals established for those individual components. The output action may be breaker tripping, or other control action that must be verified, but may be verified in overlapping segments. A grouped output control action need be verified only once within the specified time interval, but all of the UFLS or UVLS components whose operation leads to that control action must each be verified.

Table 1b — Condition-Based Maintenance - Level 2 Monitoring

Maximum Allowable Testing Intervals and Maintenance Activities for Partially Monitored Protection System Components

General Description: Protection System components whose conditions or alarms are automatically provided daily (or more frequently) to a location where action can be taken for alarmed failures. Detected maintenance-correctable issues for Level 2 Monitored Protection Systems must be reported within 1 day or less of the maintenance-correctable issue occurring, to a location where action can be taken to initiate resolution of the maintenance-correctable issue. Level 2 monitoring includes all monitoring attributes as listed below for the individual type of component.

General Maintenance Requirements: Perform maintenance activities listed and initiate necessary corrective actions in accordance with Requirement R4.**Table 1-2**

Component Type - Communications Systems

Note: Table requirements apply to all components of Protection Systems, UVLS and UFLS Systems, and SPSs except as noted.

Type of Protection System Component	Level 2 MonitoringComponent Attributes for Component	Maximum Maintenance Interval	Maintenance Activities
Protective Relays	Includes • Internal self diagnosis and alarm capability • Alarm must assert for power supply failures • Input voltage or current waveform sampling three or more times per power cycle Conversion of samples to numeric values for measurement calculations by microprocessor electronics that are also performing self diagnosis and alarmingAny unmonitored communications system necessary for correct operation of protective functions, and not having all the monitoring attributes of a category below.	12 Calendar Years 3 calendar months	Verify that the status of relays is normal with no alarms indicated. Verify acceptable measurement of powercommunications system input values. For microprocessor relays, check the relay inputs and outputs that are essential to proper functioning of the Protection System. Verify that settings are as specified. Verify that the relay alarms will be received at the location where action can be taken. Verify correct operation of output actions that are used for trippingis functional.
SPS	See the attributes of Level 2 Monitoring for the individual components of the SPS	See Maintenance Intervals for the individual components of the SPS	Perform all of the Maintenance activities listed above as established for components of the SPS, at the intervals established for those individual components. The output action may be breaker tripping, or other control action that must be verified, but may be verified in overlapping segments. A grouped output control action need be verified only once within the specified time interval, but all of the SPS components whose operation leads to that control action must each be verified.

~~Table 1c — Condition-based Maintenance — Level 3 Monitoring~~

~~Maximum Allowable Testing Intervals and Maintenance Activities for Fully Monitored Protection System Components~~

~~**General Description:** Protection System components in which every function required for correct operation of that component is continuously monitored and verified, and detected maintenance-correctable issues reported. Level 3 Monitored Protection Systems also includes verification of the means by which alarms and monitored values are transmitted to a location where action can be taken. Detected maintenance-correctable issues for Level 3 Monitored Protection Systems must be reported within 1 hour or less of the maintenance-correctable issue occurring, to a location where action can be taken to initiate resolution of the maintenance-correctable issue. Level 3 Monitoring includes all attributes of Level 2 Monitoring, with additional monitoring attributes as listed below for the individual type of component.~~

~~**General Maintenance Requirements:** Perform maintenance activities listed and initiate necessary corrective actions in accordance with Requirement R4.~~**Table 1-3**

Component Type - Voltage and Current Sensing Devices Providing Inputs to Protective Relays

Note: Table requirements apply to all components of Protection Systems, UVLS and UFLS Systems, and SPSs except as noted.

~~Type of Protection System Component~~	~~Level 3 Monitoring~~Component Attributes ~~for Component~~		Maximum Maintenance Interval	~~Maintenance~~ Activities
~~Protective Relays~~	~~Relay A/D converters are continuously monitored and alarmed~~	~~Continuous~~	~~Continuous verification of the status of the relays~~ ~~Alarm on change of settings~~	
~~Protective Relays with trip contacts~~	~~All Level attributes, except relay possesses mechanical output contacts~~	~~12 Calendar Years~~	~~Verify proper functioning of the relay trip contacts.~~	
~~Voltage and Current Sensing Inputs to Protective Relays and associated circuitry~~	~~Verification of the analog values (magnitude and phase angle) measured by the microprocessor relay or comparable device, by comparing against other measurements using other~~Any voltage and current sensing devices not having monitoring attributes of the category below.		~~Continuous~~ 12 calendar years	~~Continuous verification and comparison~~Verify that acceptable measurements of the current and voltage signals ~~from~~are received by the ~~voltage and current sensing devices of the Protection System~~protective relays.

~~Table 1c — Condition-based Maintenance — Level 3 Monitoring~~

~~Maximum Allowable Testing Intervals and Maintenance Activities for Fully Monitored Protection System Components~~

~~**General Description:** Protection System components in which every function required for correct operation of that component is continuously monitored and verified, and detected maintenance-correctable issues reported. Level 3 Monitored Protection Systems also includes verification of the means by which alarms and monitored values are transmitted to a location where action can be taken. Detected maintenance-correctable issues for Level 3 Monitored Protection Systems must be reported within 1 hour or less of the maintenance-correctable issue occurring, to a location where action can be taken to initiate resolution of the maintenance-correctable issue. Level 3 Monitoring includes all attributes of Level 2 Monitoring, with additional monitoring attributes as listed below for the individual type of component.~~

~~**General Maintenance Requirements:** Perform maintenance activities listed and initiate necessary corrective actions in accordance with Requirement R4.~~**Table 1-3**

Component Type - Voltage and Current Sensing Devices Providing Inputs to Protective Relays

Note: Table requirements apply to all components of Protection Systems, UVLS and UFLS Systems, and SPSs except as noted.

~~Type of Protection System Component~~	~~Level 3 Monitoring~~Component Attributes ~~for Component~~		Maximum Maintenance Interval	~~Maintenance~~ Activities
~~Protection System control and trip circuitry~~	~~Monitoring and alarming of the alarm path itself~~	~~Continuous~~	~~Continuous verification of the status of the monitored control circuits~~	
~~Station dc supply~~	~~No Level 3 monitoring attributes are defined – use Level 1 Maintenance Activities and intervals~~	~~18 Calendar Months~~	~~Inspect:~~ ~~• Cell condition of all individual battery cells where cells are visible – or measure battery cell/unit internal ohmic values where the cells are not visible~~ ~~• Physical condition of battery rack~~ ~~• The condition of non-battery-based dc supply~~	
~~Station dc supply (that has as a component Valve Regulated Lead-Acid batteries)~~	~~No Level 3 monitoring attributes are defined – use Level 1 Maintenance Activities and intervals~~	~~3 Calendar Years~~ ~~– or –~~ ~~3 Calendar Months~~	~~Verify that the station battery can perform as designed by conducting a performance or service capacity test of the entire battery bank. (3 calendar years)~~ ~~- or -~~ ~~Verify that the station battery can perform as designed by evaluating the measured cell/unit internal ohmic values to station battery baseline. (3 months)~~	

~~Table 1c — Condition-based Maintenance — Level 3 Monitoring~~

~~Maximum Allowable Testing Intervals and Maintenance Activities for Fully Monitored Protection System Components~~

~~**General Description:** Protection System components in which every function required for correct operation of that component is continuously monitored and verified, and detected maintenance-correctable issues reported. Level 3 Monitored Protection Systems also includes verification of the means by which alarms and monitored values are transmitted to a location where action can be taken. Detected maintenance-correctable issues for Level 3 Monitored Protection Systems must be reported within 1 hour or less of the maintenance-correctable issue occurring, to a location where action can be taken to initiate resolution of the maintenance-correctable issue. Level 3 Monitoring includes all attributes of Level 2 Monitoring, with additional monitoring attributes as listed below for the individual type of component.~~

~~**General Maintenance Requirements:** Perform maintenance activities listed and initiate necessary corrective actions in accordance with Requirement R4.~~**Table 1-3**

Component Type - Voltage and Current Sensing Devices Providing Inputs to Protective Relays

Note: Table requirements apply to all components of Protection Systems, UVLS and UFLS Systems, and SPSs except as noted.

~~Type of Protection System Component~~	~~Level 3 Monitoring~~Component Attributes ~~for Component~~		Maximum Maintenance Interval	~~Maintenance~~ Activities
~~Station dc supply (that has as a component Vented Lead-Acid Batteries)~~	~~No Level 3 monitoring attributes are defined – use Level 1 Maintenance Activities and intervals~~	~~6 Calendar Years~~ ~~- or -~~ ~~18 Calendar Months~~	~~Verify that the station battery can perform as designed by conducting a performance service, or modified performance capacity test of the entire battery bank. (6 calendar years)~~ ~~- or -~~ ~~Verify that the station battery can perform as designed by evaluating the measured cell/unit internal ohmic values to station battery baseline. (18 Months)~~	
~~Station dc supply (that has as a component Nickel-Cadmium batteries)~~	~~No Level 3 monitoring attributes are defined – use Level 1 Maintenance Activities and intervals~~	~~6 Calendar Years~~	~~Verify that the substation battery can perform as designed by conducting a performance service, or modified performance capacity test of the entire battery bank.~~	

~~Table 1c — Condition-based Maintenance — Level 3 Monitoring~~

~~Maximum Allowable Testing Intervals and Maintenance Activities for Fully Monitored Protection System Components~~

~~**General Description:** Protection System components in which every function required for correct operation of that component is continuously monitored and verified, and detected maintenance-correctable issues reported. Level 3 Monitored Protection Systems also includes verification of the means by which alarms and monitored values are transmitted to a location where action can be taken. Detected maintenance-correctable issues for Level 3 Monitored Protection Systems must be reported within 1 hour or less of the maintenance-correctable issue occurring, to a location where action can be taken to initiate resolution of the maintenance-correctable issue. Level 3 Monitoring includes all attributes of Level 2 Monitoring, with additional monitoring attributes as listed below for the individual type of component.~~

~~**General Maintenance Requirements:** Perform maintenance activities listed and initiate necessary corrective actions in accordance with Requirement R4.~~**Table 1-3**

Component Type - Voltage and Current Sensing Devices Providing Inputs to Protective Relays

Note: Table requirements apply to all components of Protection Systems, UVLS and UFLS Systems, and SPSs except as noted.

~~Type of Protection System Component~~	~~Level 3 Monitoring~~Component Attributes ~~for Component~~		Maximum Maintenance Interval	~~Maintenance~~ Activities
~~Station dc Supply (any battery technology)~~	~~Monitoring and alarming for station dc supply voltage, unintentional dc grounds, electrolyte level of all cells of a station battery, individual battery cell/unit state of charge, battery continuity of station battery and cell-to-cell and battery terminal resistance~~	~~Continuous~~	~~Continuous monitoring of station dc supply voltage, unintentional dc grounds, electrolyte level of all cells of a station battery, individual battery cell/unit state of charge, battery continuity of station battery and cell-to-cell and battery terminal resistance are provided with alarming to remote location upon any failure of the monitoring device or when sensors for the devises are out of calibration.~~	

~~Table 1c — Condition-based Maintenance — Level 3 Monitoring~~

~~Maximum Allowable Testing Intervals and Maintenance Activities for Fully Monitored Protection System Components~~

~~**General Description:** Protection System components in which every function required for correct operation of that component is continuously monitored and verified, and detected maintenance-correctable issues reported. Level 3 Monitored Protection Systems also includes verification of the means by which alarms and monitored values are transmitted to a location where action can be taken. Detected maintenance-correctable issues for Level 3 Monitored Protection Systems must be reported within 1 hour or less of the maintenance-correctable issue occurring, to a location where action can be taken to initiate resolution of the maintenance-correctable issue. Level 3 Monitoring includes all attributes of Level 2 Monitoring, with additional monitoring attributes as listed below for the individual type of component.~~

~~**General Maintenance Requirements:** Perform maintenance activities listed and initiate necessary corrective actions in accordance with Requirement R4.~~**Table 1-3**

Component Type - Voltage and Current Sensing Devices Providing Inputs to Protective Relays

Note: Table requirements apply to all components of Protection Systems, UVLS and UFLS Systems, and SPSs except as noted.

~~Type of Protection System Component~~	~~Level 3 Monitoring~~Component Attributes ~~for Component~~		Maximum Maintenance Interval	~~Maintenance~~ Activities
~~Station dc Supply which do not use a station battery~~	~~No Level 3 monitoring attributes are defined – use Level 1 Maintenance Activities and intervals~~	~~6 Calendar Years~~		~~Verify that the dc supply can perform as designed when the ac power from the grid is not present.~~
~~Associated communications systems~~	~~Evaluating the performance of the channel and its interface to protective relays to determine the quality of the channel and alarming if the channel does not meet performance criteria~~	~~Continuous~~		~~Continuous verification that the performance and quality of the channel meets performance criteria is provided.~~ ~~Continuous verification of the communications equipment alarm system is provided.~~

~~Table 1c — Condition-based Maintenance — Level 3 Monitoring~~

~~Maximum Allowable Testing Intervals and Maintenance Activities for Fully Monitored Protection System Components~~

~~**General Description:** Protection System components in which every function required for correct operation of that component is continuously monitored and verified, and detected maintenance-correctable issues reported. Level 3 Monitored Protection Systems also includes verification of the means by which alarms and monitored values are transmitted to a location where action can be taken. Detected maintenance-correctable issues for Level 3 Monitored Protection Systems must be reported within 1 hour or less of the maintenance-correctable issue occurring, to a location where action can be taken to initiate resolution of the maintenance-correctable issue. Level 3 Monitoring includes all attributes of Level 2 Monitoring, with additional monitoring attributes as listed below for the individual type of component.~~

~~**General Maintenance Requirements:** Perform maintenance activities listed and initiate necessary corrective actions in accordance with Requirement R4.~~**Table 1-3**

Component Type - Voltage and Current Sensing Devices Providing Inputs to Protective Relays

Note: Table requirements apply to all components of Protection Systems, UVLS and UFLS Systems, and SPSs except as noted.

~~**Type of Protection System Component**~~	~~**Level 3 Monitoring**~~**Component Attributes** ~~**for Component**~~		**Maximum Maintenance Interval**	~~**Maintenance**~~ **Activities**
~~UVLS and UFLS relays that comprise a protection scheme distributed over the power system.~~	~~The relay A/D converters are continuously monitored and alarmed.~~	~~Continuous~~	~~Continuous verification of the status of the relays~~ ~~Alarm on change of settings~~ ~~Verification does not require actual tripping of circuit breakers or interrupting devices~~	

~~Relay sensing for centralized UFLS or UVLS systems.~~	~~See the attributes of Level 3 Monitoring for the individual components of the UFLS/UVLS~~	~~See Maintenance Activities~~	~~Perform all of the Maintenance activities listed above as established for components of the UFLS or UVLS systems at the intervals established for those individual components. The output action may be breaker tripping, or other control action that must be verified, but may be verified in overlapping segments. A grouped output control action need be verified only once within the specified time interval, but all of the UFLS or UVLS components whose operation leads to that control action must each be verified.~~Voltage and Current Sensing devices connected to microprocessor relays with AC measurements are continuously verified by comparison of sensing input value as measured by the microprocessor relay to an independent ac measurement source, with alarming for unacceptable error or failure.	No periodic maintenance specified	None.
~~SPS~~	~~See the attributes of Level 3 Monitoring for the individual components of the SPS~~	~~See Maintenance Activities~~		~~Perform all of the Maintenance activities listed above as established for components of the SPS at the intervals established for those individual components. The output action may be breaker tripping, or other control action that must be verified, but may be verified in overlapping segments. A grouped output control action need be verified only once within the specified time interval, but all of the SPS components whose operation leads to that control action must each be verified.~~	

~~**Notes for Table 1a, Table 1b, and Table 1c**~~

~~For some Protection System components, adjustment is required to bring measurement accuracy within parameters established by the asset owner based on the specific application of the component. A calibration failure is the result if testing finds the specified parameters to be out of tolerance.~~

Table 1-4 Component Type - Station dc Supply **Note:** Table requirements apply to all components of Protection Systems, UVLS and UFLS Systems, and SPSs except as noted.		
Component Attributes	**Maximum Maintenance Interval**	**Activities**
Any dc supply for a UFLS or UVLS system.	When control circuits are verified	Verify dc supply voltage
Any unmonitored station dc supply not having the monitoring attributes of a category below. (excluding UFLS and UVLS)	3 Calendar Months	Verify: • Station dc supply voltage Inspect: • Electrolyte level (excluding valve-regulated lead acid batteries) • For unintentional grounds
	18 Calendar Months	Verify: • State of charge of the individual battery cells/units • Float voltage of battery charger • Battery continuity • Battery terminal connection resistance • Battery internal cell-to-cell or unit-to-unit connection resistance (where available to measure) Inspect: • Cell condition of all individual battery cells where cells are visible – or measure battery cell/unit internal ohmic values where the cells are not visible • Physical condition of battery rack • Condition of non-battery-based dc supply
Any unmonitored Station dc supply in which a battery is not used and not having the monitoring attributes of a category below. (excluding UFLS and UVLS)	6 Calendar Years	Verify that the dc supply can perform as designed when ac power from the grid is not present.
Unmonitored Station dc supply with Valve Regulated Lead-Acid (VRLA) batteries that does not have the monitoring attributes of a category below. (excluding UFLS and UVLS)	3 Calendar Months	Verify that the station battery can perform as designed by evaluating the measured cell/unit internal ohmic values to station battery baseline.

Table 1-4 Component Type - Station dc Supply Note: Table requirements apply to all components of Protection Systems, UVLS and UFLS Systems, and SPSs except as noted.		
Component Attributes	**Maximum Maintenance Interval**	**Activities**
	---------- or ----------	
	3 Calendar Years	Verify that the station battery can perform as designed by conducting a performance or service capacity test of the entire battery bank.
Unmonitored Station dc supply with Vented Lead-Acid Batteries (VLA) that does not have the monitoring attributes of a category below. (excluding UFLS and UVLS)	18 Calendar Months	Verify that the station battery can perform as designed by evaluating the measured cell/unit internal ohmic values to station battery baseline.
	---------- or ----------	
	6 Calendar Years	Verify that the station battery can perform as designed by conducting a performance, service, or modified performance capacity test of the entire battery bank.
Unmonitored Station dc supply with Nickel-Cadmium (Ni-Cad) batteries that does not have the monitoring attributes of a category below. (excluding UFLS and UVLS)	6 Calendar Years	Verify that the station battery can perform as designed by conducting a performance service, or modified performance capacity test of the entire battery bank.
Monitored Station dc supply (excluding UFLS and UVLS) with: Monitor and alarm for variations from defined levels (See Table 2): • Station dc supply voltage (voltage of battery charger) • State of charge of the individual battery cell/units • Battery continuity of station battery • Cell-to-cell (if available) and battery terminal resistance	18 calendar months	Inspect: • Cell condition of all individual battery cells where cells are visible – or measure battery cell/unit internal ohmic values where the cells are not visible • Physical condition of battery rack • Condition of non-battery-based dc supply

Table 1-4 Component Type - Station dc Supply **Note:** Table requirements apply to all components of Protection Systems, UVLS and UFLS Systems, and SPSs except as noted.		
Component Attributes	**Maximum Maintenance Interval**	**Activities**
• Electrolyte level of all cells in a station battery • Unintentional dc grounds • Cell/unit internal ohmic values of station battery	6 calendar years	Verify that the monitoring devices are calibrated (where necessary)
Continuously monitored Station dc supply (excludes UFLS and UVLS) with preceding row attributes and the following: • The monitoring devices themselves are monitored.	18 calendar months	Inspect: • Cell condition of all individual battery cells where cells are visible – or measure battery cell/unit internal ohmic values where the cells are not visible • Physical condition of battery rack • Condition of non-battery-based dc supply

Table 1-5 Component Type - Control Circuitry **Note:** Table requirements apply to all components of Protection Systems, UVLS and UFLS Systems, and SPSs except as noted.		
Component Attributes	**Maximum Maintenance Interval**	**Activities**
Trip coils or actuators of circuit breakers, interrupting devices, or mitigating devices (excluding UFLS or UVLS systems).	6 calendar years	Verify that each trip coil is able to operate the circuit breaker, interrupting device, or mitigating device.
Trip coils of circuit breakers and interrupting devices in UFLS or UVLS systems.	No periodic maintenance specified	None.
Electromechanical trip or auxiliary devices	6 calendar years	Verify electrical operation of electromechanical trip and auxiliary devices
Unmonitored Control circuitry associated with protective functions	12 calendar years	Verify all paths of the control and trip circuits.
Control circuitry whose continuity and energization or ability to operate are monitored and alarmed (See Table 2).	No periodic maintenance specified	None.

Table 2 – Alarming Paths In Tables 1-1 through 1-5, alarm attributes used to justify extended maximum maintenance intervals and/or reduced maintenance activities are subject to the following maintenance requirements		
Component Attributes	**Maximum Maintenance Interval**	**Activities**
Any alarm path through which alarms in Tables 1-1 through 1-5 are conveyed from the alarm origin to the location of corrective action, and not having all the attributes of the category below. Alarms are automatically reported within 24 hours of DETECTION to a location where corrective action can be taken.	When alarm producing device or system is verified	Verify that the alarm signals are conveyed to a location where corrective action can be taken.
Alarm Path with monitoring: The location where corrective action is taken receives an alarm within 24 hours for failure of any portion of the alarming path from the alarm origin to the location where corrective action can be taken.	No periodic maintenance specified	None.

PRC-005 — Attachment A

Criteria for a Performance-Based Protection System Maintenance Program

Purpose: To establish a technical basis for initial and continued use of a performance-based Protection System Maintenance Program (PSMP).

~~**Segment:** In this procedure, the term, "segment" is a grouping of Protection Systems or components from a single manufacturer, with common factors such that consistent performance is expected across the entire population of the segment, and shall only be defined for a population of 60 or more individual components.~~[4]

To establish the technical justification for the initial use of a performance-based PSMP:

1. Develop a list with a description of components included in each designated segment of the Protection System component population.
2. Maintain the components in each segment according to the time-based maximum allowable intervals established in ~~Table 1~~Tables 1-1through 1-5 until results of maintenance activities for the segment are available for a minimum of 30 individual components of the segment.
3. Document the maintenance program activities and results for each segment, including maintenance dates and countable events[5] for each included component.
4. Analyze the maintenance program activities and results for each segment to determine the overall performance of the segment and develop maintenance intervals.
5. Determine the maximum allowable maintenance interval for each segment such that the segment experiences countable events on no more than 4% of the components within the segment, for the greater of either the last 30 components maintained or all components maintained in the previous year.

To maintain the technical justification for the ongoing use of a performance-based PSMP:

1. At least annually, update the list of Protection System components and segments and/or description if any changes occur within the segment.
2. Perform maintenance on the greater of 5% of the components (addressed in the performance based PSMP) in each segment or 3 individual components within the segment in each year.
3. For the prior year, analyze the maintenance program activities and results for each segment to determine the overall performance of the segment.
4. If the components in a Protection System segment maintained through a performance-based PSMP experience 4% or more countable events, develop, document, and

---

~~[4] Entities with smaller populations of component devices may aggregate their populations to define a segment and shall share all attributes of a single performance-based program for that segment.~~

[5] Countable events include any failure of a component requiring repair or replacement, any condition discovered during the verification activities in Table 1a through Table 1c which requires corrective action, or a Misoperation attributed to hardware failure or calibration failure.

implement an action plan to reduce the countable events to less than 4% of the segment population within 3 years.

5. Using the prior year's data, determine the maximum allowable maintenance interval for each segment such that the segment experiences countable events on no more than 4% of the components within the segment, for the greater of either the last 30 components maintained or all components maintained in the previous year.

Implementation Plan for PRC-005-02

Standards Involved:

- Approval:
  - PRC-005-2 – Protection System Maintenance and Testing

- Retirements:
  - PRC-005-1 – Transmission and Generation Protection System Maintenance and Testing
  - PRC-008-0 – Implementation and Documentation of Underfrequency Load Shedding
  - Equipment Maintenance Program
  - PRC-011-0 – Undervoltage Load Shedding System Maintenance and Testing
  - PRC-017-0 – Special Protection System Maintenance and Testing

Prerequisite Approvals:

- Revised definition of "Protection System"

Background:

The Implementation Plan reflects consideration of the following:

1. The requirements set forth in the proposed standard establish maximum allowable maintenance intervals for the first time. The established maximum allowable intervals may be shorter than those currently in use by some entities.
2. For entities using longer intervals than the maximum allowable intervals established in the proposed standard, it is unrealistic for those entities to be immediately in compliance with the new intervals. Further, entities should be allowed to become compliant in such a way as to facilitate a continuing maintenance program.
3. Entities that have previously been performing maintenance within the newly specified intervals may not have all the documentation needed to demonstrate compliance with all of the maintenance activities specified.

General Considerations:

Each Transmission Owner, Generator Owner, and Distribution Provider shall follow the protection system maintenance and testing program it used to perform maintenance and testing to comply with PRC-005-1, PRC-008-0, PRC-011-0, and PRC-017-0 (for the protection system components identified in PRC-005-2 Tables 1-1 through 1-5) until that Transmission Owner, Generator Owner or Distribution Provider meets initial compliance for maintenance of the same protection system component, in accordance with the phasing specified below.

For audits that are conducted during the time period when entities are modifying their existing protection system maintenance and testing programs to become compliant with the maintenance activities and intervals specified in PRC-005-2, each responsible entity must be prepared to identify:

- All of its applicable protection system components.
- For each component, whether maintenance of that component is still being addressed under PRC-005-1 or is being performed according toPRC-005-2.
- Evidence that each component has been maintained under the relevant requirements.

Retirement of Existing Standards:
The existing Standards PRC-005-1, PRC-008-0, PRC-011-0, and PRC-017-0 shall be retired upon regulatory approval of PRC-005-2.

Implementation Plan for Definition:
Protection System Maintenance Program – Entities shall use this definition when implementing any portions of R1, R2, R3, and R4 which use this defined term.

Implementation plan for Requirement R1:

- Entities shall be 100% compliant on the first day of the first calendar quarter twelve months following applicable regulatory approvals, or in those jurisdictions where no regulatory approval is required, on the first day of the first calendar quarter six months following Board of Trustees adoption.

Implementation plan for Requirements R2, R3, and R4:

1. For Protection System Components with maximum allowable intervals of less than 1 year, as established in Tables 1-1 through 1-5:
    a. The entity shall be 100% compliant on the first day of the first calendar quarter 12 months following applicable regulatory approval, or in those jurisdictions where no regulatory approval is required, on the first day of the first calendar quarter 12 months following Board of Trustees adoption.

2. For Protection System Components with maximum allowable intervals 1 year or more, but 2 years or less, as established in Tables 1-1 through 1-5:
    a. The entity shall be 100% compliant on the first day of the first calendar quarter 2 calendar years following applicable regulatory approval, or in those jurisdictions where no regulatory approval is required, on the first day of the first calendar quarter 2 calendar years following Board of Trustees adoption.

3. For Protection System Components with maximum allowable intervals of 6 years, as established in Tables 1-1 through 1-5:
    a. The entity shall be at least 30% compliant on the first day of the first calendar quarter 2 calendar years following applicable regulatory approval (or, for generating plants with scheduled outage intervals exceeding two calendar years, at the conclusion of the first succeeding maintenance outage), or in those jurisdictions where no regulatory approval is required, on the first day of the first calendar quarter 2 calendar years following Board of Trustees adoption.
    b. The entity shall be at least 60% compliant on the first day of the first calendar quarter 4 calendar years following applicable regulatory approval, or in those jurisdictions where no regulatory approval is required, on the first day of the first calendar quarter 4 calendar years following Board of Trustees adoption.
    c. The entity shall be 100% compliant on the first day of the first calendar quarter 6 calendar years following applicable regulatory approval, or in those jurisdictions where no regulatory approval is required, on the first day of the first calendar quarter 6 calendar years following Board of Trustees adoption.

4. For Protection System Components with maximum allowable intervals of 12 years, as established in Tables 1-1 through 1-5:
    a. The entity shall be at least 30% compliant on the first day of the first calendar quarter 4 calendar years following applicable regulatory approval, or in those jurisdictions where no regulatory approval is required, on the first day of the first calendar quarter 4 calendar years following Board of Trustees adoption.
    b. The entity shall be at least 60% compliant on the first day of the first calendar quarter following 8 calendar years following applicable regulatory approval, or in those jurisdictions where no regulatory approval is required, on the first day of the first calendar quarter 8 calendar years following Board of Trustees adoption.
    c. The entity shall be 100% compliant on the first day of the first calendar quarter 12 calendar years following applicable regulatory approval, or in those jurisdictions where no regulatory approval is required, on the first day of the first calendar quarter 12 calendar years following Board of Trustees adoption.

Applicability:
This standard applies to the following functional entities:

- Transmission Owners
- Generator Owners
- Distribution Providers

~~Draft~~ Implementation Plan for PRC-005-02

Standards Involved:

- Approval:
  - PRC-005-2 – Protection System Maintenance and Testing

- Retirements:
  - PRC-005-1 – Transmission and Generation Protection System Maintenance and Testing
  - PRC-008-0 – Implementation and Documentation of Underfrequency Load Shedding
  - Equipment Maintenance Program
  - PRC-011-0 – Undervoltage Load Shedding System Maintenance and Testing
  - PRC-017-0 – Special Protection System Maintenance and Testing

Prerequisite Approvals:

- Revised definition of "Protection System"

Background:

~~In developing the implementation plan, the Standard Drafting Team considered~~The Implementation Plan reflects consideration of the following:

1. The requirements set forth in the proposed standard establish maximum allowable maintenance intervals for the first time. The established maximum allowable intervals may be shorter than those currently in use by some entities.
2. For entities using longer intervals than the maximum allowable intervals established in the proposed standard, it is unrealistic for those entities to be immediately in compliance with the new intervals. Further, entities should be allowed to become compliant in such a way as to facilitate a continuing maintenance program.
3. Entities that have previously been performing maintenance within the newly specified intervals may not have all the documentation needed to demonstrate compliance with all of the maintenance activities specified.

General Considerations:

Each Transmission Owner, Generator Owner, and Distribution Provider shall follow the protection system maintenance and testing program it used to perform maintenance and testing to comply with PRC-005-1, PRC-008-0, PRC-011-0, and PRC-017-0 (for the protection system components identified in PRC-005-2 ~~Table 1a~~Tables 1-1 through 1-5) until that Transmission Owner, Generator Owner or Distribution Provider meets initial compliance for maintenance of the same protection system component, in accordance with the phasing specified below.

For audits that are conducted during the time period when entities are modifying their existing protection system maintenance and testing programs to become compliant with the maintenance activities and intervals specified in PRC-005-2, each responsible entity must be prepared to identify:

- All of its applicable protection system components.
- For each component, whether maintenance of that component is still being addressed under PRC-005-1 or ~~has been moved under PRC~~is being performed according toPRC-005-2.
- Evidence that each component has been maintained under the relevant requirements.

Retirement of Existing Standards:
The existing Standards PRC-005-1, PRC-008-0, PRC-011-0, and PRC-017-0 shall be retired upon regulatory approval of PRC-005-2.

Implementation Plan for Definition:
Protection System Maintenance Program – Entities shall use this definition when implementing any portions of R1, R2, R3, and R4 which use this defined term.

Implementation plan for Requirement R1:

- Entities shall be 100% compliant on the first day of the first calendar quarter ~~three~~twelve months following applicable regulatory approvals, or in those jurisdictions where no regulatory approval is required, on the first day of the first calendar quarter six months following Board of Trustees adoption.

Implementation plan for Requirements R2, R3, and R4:

1. For Protection System Components with maximum allowable intervals of less than 1 year, as established in ~~Table 1a,~~ Tables 1-1 through 1-5:
    a. The entity shall be 100% compliant on the first day of the first calendar quarter 12 months following applicable regulatory approval, or in those jurisdictions where no regulatory approval is required, on the first day of the first calendar quarter 12 months following Board of Trustees adoption.

2. For Protection System Components with maximum allowable intervals 1 year or more, but 2 years or less, as established in ~~Table 1a,~~ Tables 1-1 through 1-5:
    a. The entity shall be 100% compliant on the first day of the first calendar quarter 2 calendar years following applicable regulatory approval, or in those jurisdictions where no regulatory approval is required, on the first day of the first calendar quarter 2 calendar years following Board of Trustees adoption.

3. For Protection System Components with maximum allowable intervals of 6 years, as established in ~~Table 1a,~~ Tables 1-1 through 1-5:
    a. The entity shall be at least 30% compliant on the first day of the first calendar quarter 2 calendar years following applicable regulatory approval~~,~~ (or, for generating plants with scheduled outage intervals exceeding two calendar years, at the conclusion of the first succeeding maintenance outage), or in those jurisdictions where no regulatory approval is required, on the first day of the first calendar quarter 2 calendar years following Board of Trustees adoption.
    b. The entity shall be at least 60% compliant on the first day of the first calendar quarter 4 calendar years following applicable regulatory approval, or in those jurisdictions where no regulatory approval is required, on the first day of the first calendar quarter 4 calendar years following Board of Trustees adoption.
    c. The entity shall be 100% compliant on the first day of the first calendar quarter 6 calendar years following applicable regulatory approval, or in those jurisdictions where no regulatory approval is required, on the first day of the first calendar quarter 6 calendar years following Board of Trustees adoption.

4. For Protection System Components with maximum allowable intervals of 12 years, as established in ~~Table 1a,~~ Tables 1-1 through 1-5:
    a. The entity shall be at least 30% compliant on the first day of the first calendar quarter 4 calendar years following applicable regulatory approval, or in those jurisdictions where no regulatory approval is required, on the first day of the first calendar quarter 4 calendar years following Board of Trustees adoption.
    b. The entity shall be at least 60% compliant on the first day of the first calendar quarter following 8 calendar years following applicable regulatory approval, or in those jurisdictions where no regulatory approval is required, on the first day of the first calendar quarter 8 calendar years following Board of Trustees adoption.
    c. The entity shall be 100% compliant on the first day of the first calendar quarter 12 calendar years following applicable regulatory approval, or in those jurisdictions where no regulatory approval is required, on the first day of the first calendar quarter 12 calendar years following Board of Trustees adoption.

Applicability:
This standard applies to the following functional entities:

- Transmission Owners
- Generator Owners
- Distribution Providers

NERC
NORTH AMERICAN ELECTRIC RELIABILITY CORPORATION

Unofficial Comment Form for 3rd Draft of PRC-005-2 – Protection System Maintenance [Project 2007-17]

Please **DO NOT** use this form to submit comments on the 3rd draft of the standard for Protection System Maintenance and Testing. Comments must be submitted by **December 17, 2010**. If you have questions please contact Al McMeekin at al.mcmeekin@nerc.net or by telephone at 803-530-1963.

http://www.nerc.com/filez/standards/Protection_System_Maintenance_Project_2007-17.html

Background Information:

The Protection System Maintenance and Testing Standard Drafting Team (PSMT SDT) has made substantial changes to the third posting of PRC-005-2 based on comments received from the industry. The changes include:

- Adding more definitions of terms used in the body of the standard.
- Revisions to the standard and tables to remove complexity.
- Revisions to the implementation period.
- Revisions to the Supplemental Reference and the FAQ documents.
- Revisions to the Measures, Time Horizons, Violation Risk Factors (VRFs) and Violation Security Levels (VSLs).

The PSMT SDT would like to receive industry comments on this standard.

You do not have to answer all questions. Enter All Comments in Simple Text Format.

Insert a "check" mark in the appropriate boxes by double-clicking the gray areas.

1. The SDT has restructured the tables to improve clarity, but did not appreciably change the content. Do you agree that the restructured tables are clearer? If not, please provide specific suggestions for improvement.

   ☐ Yes
   ☐ No
   Comments:

2. The SDT has modified the VSLs, VRFs and Time Horizons with this posting. Do you agree with the changes? If not, please provide specific suggestions for improvement.

   ☐ Yes
   ☐ No
   Comments:

3. The SDT has provided the "Supplementary Reference" document to provide supporting discussion for the Requirements within the standard. Do you have any specific suggestions for improvements?

   ☐ Yes

   ☐ No

   Comments:

4. The SDT has provided the "Frequently-Asked Questions" (FAQ) document to address anticipated questions relative to the standard. Do you have any specific suggestions for improvements?

   ☐ Yes

   ☐ No

   Comments:

5. If you have any other comments on this Standard that you have not already provided in response to the prior questions, please provide them here.

   Comments:

NERC
NORTH AMERICAN ELECTRIC
RELIABILITY COUNCIL

NERC Protection System Maintenance Standard PRC-005-2

FREQUENTLY ASKED QUESTIONS - Practical Compliance and Implementation

November 17, 2010

Informative Annex to Standard PRC-005-2

Prepared by the

Protection System Maintenance and Testing Standard Drafting Team

Table of Contents

Introduction **2**

Executive Summary **2**

Terms Used in PRC-005-2 ..... **2**

Frequently Asked Questions **2**

I General FAQs: *2*
II Group by Type of Protection System Component: *4*
1. All Protection System Components *4*
2. Protective Relays *4*
3. Voltage and Current Sensing Device Inputs to Protective Relays *8*
4. Protection System Control Circuitry *9*
5. Station dc Supply *11*
6. Protection System Communications Equipment *15*
7. UVLS and UFLS Relays that Comprise a Protection System Distributed Over the Power System *18*
8. SPS or Relay Sensing for Centralized UFLS or UVLS *19*
III Group by Type of BES Facility: *19*
1. All BES Facilities *19*
2. Generation *20*
3. Transmission *21*
IV Group by Type of Maintenance Program: *21*
1. All Protection System Maintenance Programs *21*
2. Time-Based Protection System Maintenance (TBM) Programs *23*
3. Performance-Based Protection System Maintenance (PBM) Programs *25*
V Group by Monitoring Level: *30*
1. All Monitoring Levels *30*
2. Unmonitored Protection Systems *33*
3. Monitored Protection Systems *33*
4. Monitored Protection Systems that also monitor alarm path failures *34*

Appendix A — Protection System Maintenance Standard Drafting Team **35**

Index **36**

Introduction

The following is a draft collection of questions and answers that the PSMT SDT believes could be helpful to those implementing NERC Standard PRC-005-2 Protection System Maintenance. As the draft standard proceeds through development, this FAQ document will be revised, including responses to key or frequent comments from the posting process. The FAQ will be organized at a later time during the development of the draft Standard.

This FAQ document will support both the Standard and the associated Technical Reference document.

Executive Summary

- Write later if needed

Terms Used in PRC-005-2

Frequently Asked Questions

I General FAQs:

1. **The standard seems very complicated, and is difficult to understand. Can it be simplified?**

   Because the standard is establishing parameters for condition-based Maintenance (R2) and performance-based Maintenance (R3) in addition to simple time-based Maintenance, it does appear to be complicated. At its simplest, an entity needs to and perform ONLY time-based maintenance according to the unmonitored rows of the Tables. If an entity then wishes to take advantage of monitoring on its Protection System components and its available lengthened time intervals then it may, as long as the component has the listed monitoring attributes. If an entity wishes to use historical performance of its Protection System components to perform performance-based Maintenance, then R3 applies.

   Please see the following diagram, which provides a “flow chart” of the standard.

Requirements Flowchart

PRC-005-2

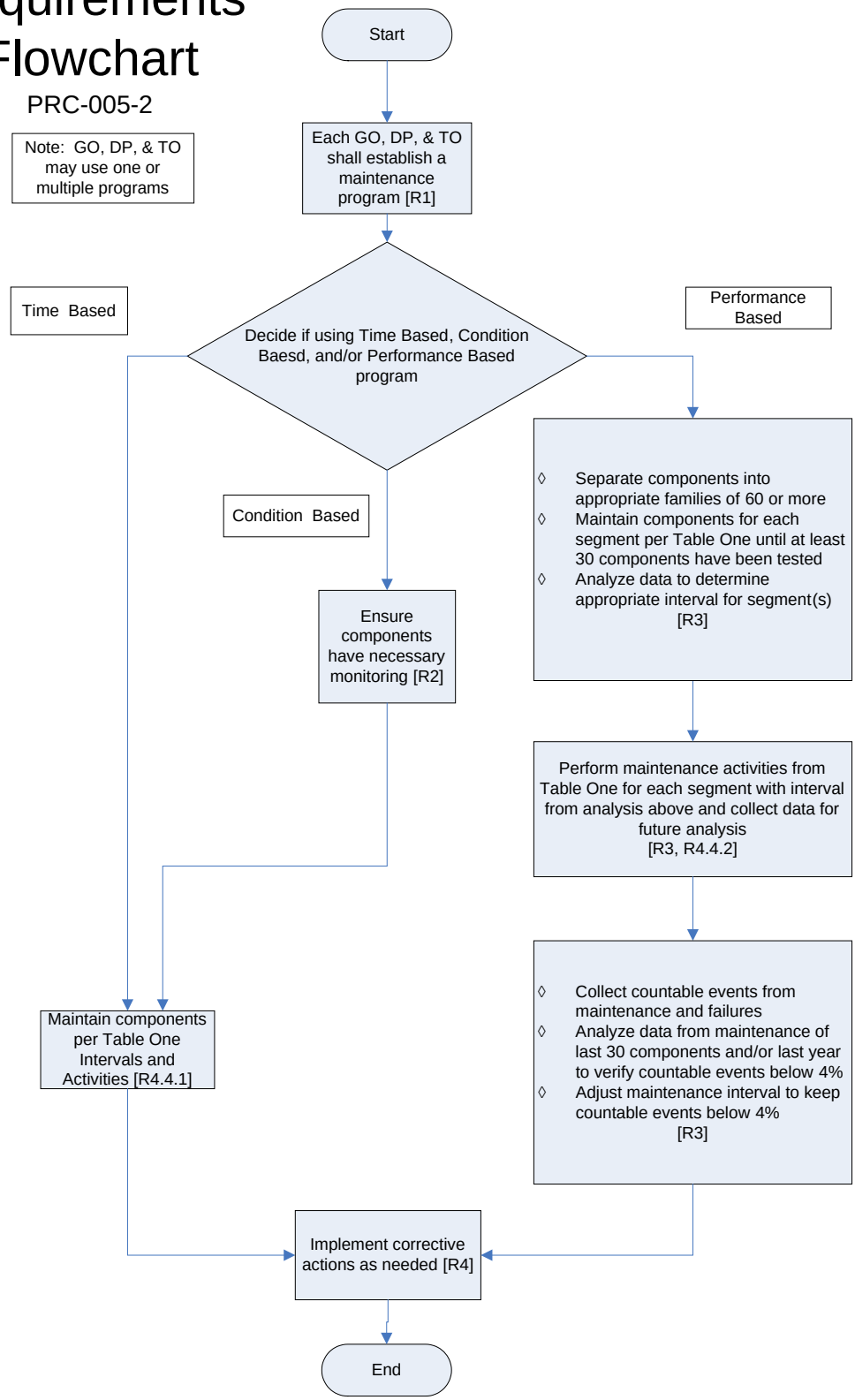

II Group by Type of Protection System Component:

1. All Protection System Components

A. Are power circuit reclosers, reclosing relays, closing circuits and auto-restoration schemes covered in this standard?

No. As stated in Requirement R1, this standard covers protective relays that use measurements of voltage, current and/or phase angle to determine anomalies and to trip a portion of the BES. Reclosers, reclosing relays, closing circuits and auto-restoration schemes are used to cause devices to close as opposed to electrical-measurement relays and their associated circuits that cause circuit interruption from the BES; such closing devices and schemes are more appropriately covered under other NERC Standards. There is one notable exception: if a Special Protection System incorporates automatic closing of breakers, the related closing devices are part of the SPS and must be tested accordingly.

B. Why does PRC-005-2 not specifically require maintenance and testing procedures as reflected in the previous standard, PRC-005-1?

PRC-005-1 does not require detailed maintenance and testing procedures, but instead requires summaries of such procedures, and is not clear on what is actually required. PRC-005-2 requires a documented maintenance program, and is focused on establishing requirements rather than prescribing methodology to meet those requirements. Between the activities identified in the tables 1-1 through 1-5 and Table 2 (collectively the "Tables"), and the various components of the definition established for a "Protection System Maintenance Program", PRC-005-2 establishes the activities and time-basis for a Protection System Maintenance Program to a level of detail not previously required.

2. Protective Relays

A. How do I approach testing when I have to upgrade firmware of a microprocessor relay?

The entity should ensure that the relay continues to function properly after implementation of firmware changes. Some entities may have a R&D department that might routinely run acceptance tests on devices with firmware upgrades before allowing the upgrade to be installed. Other entities may rely upon the vigorous testing of the firmware OEM. An entity has the latitude to install devices and/or programming that they believe will perform to their satisfaction. If an entity should choose to perform the maintenance activities specified in the Tables following a firmware upgrade then they may, if they choose, reset the time clock on that set of maintenance activities so that they would not have to repeat the maintenance on its regularly scheduled cycle. (However, for simplicity in maintenance schedules, some entities may choose to not reset this time clock; it is merely a suggested option.)

B. Please clarify what is meant by restoration in the definition of maintenance.

The description of "Restoration" in the definition of a Protection System Maintenance Program, addresses corrective activities necessary to assure that the component is returned to working order following the discovery of its failure or malfunction. The Maintenance Activities specified in the Tables do not present any requirements related to Restoration; R4.3 of the standard does require that the entity "initiate any necessary activities to correct unresolved maintenance correctable issues". Some examples of restoration (or correction of maintenance-correctable issues) include, but are not limited to, replacement of capacitors in distance relays to bring them to working order; replacement of relays, or other Protection System components, to bring the Protection System to working order; upgrade of electro-mechanical or solid-state protective relays to micro-processor based relays following the discovery of failed components. Restoration, as used in this context is not to be confused with Restoration rules as used in system operations. Maintenance activity necessarily includes both the detection of problems and the repairs needed to eliminate those problems. This standard does not identify all of the Protection System problems that must be detected and eliminated, rather it is the intent of this standard that an entity determines the necessary working order for their various devices and keeps them in working order. If an equipment item is repaired or replaced then the entity can restart the maintenance-time-interval-clock if desired, however the replacement of equipment does not remove any documentation requirements that would have been required to verify compliance with time-interval requirements; in other words do not discard maintenance data that goes to verify your work

C. If I upgrade my old relays then do I have to maintain my previous equipment maintenance documentation?

If an equipment item is repaired or replaced then the entity can restart the maintenance-activity-time-interval-clock if desired, however the replacement of equipment does not remove any documentation requirements. The requirements in the standard are intended to ensure that an entity has a maintenance plan and that the entity adheres to minimum activities and maximum time intervals. The documentation requirements are intended to help an entity demonstrate compliance. For example, saving the dates and records of the last two maintenance activities is intended to demonstrate compliance with the interval. Therefore, if you upgrade or replace equipment then you still must maintain the documentation for the previous equipment, thus demonstrating compliance with the time interval requirement prior to the replacement action.

D. What is meant by "Verify that settings are as specified" maintenance activity in Table 1-1?

Verification of settings is an activity directed mostly towards microprocessor based relays.

For relay maintenance departments that choose to test microprocessor based relays in the same manner as electro-mechanical relays are tested, the testing process sometimes requires that some specific functions be disabled. Later tests might enable the functions previously disabled but perhaps still other functions or logic statements were then masked out. It is imperative that, when the relay is placed into service, the settings in the relay be the settings that were intended to be in that relay or as the Standard states "…settings are as specified."

Many of the microprocessor based relays available today have software tools which provide this functionality and generate reports for this purpose.

For evidence or documentation of this requirement a simple recorded acknowledgement that the settings were checked to be as specified is sufficient.

The drafting team was careful not to require "…that the relay settings be correct…" because it was believed that this might then place a burden of proof that the specified settings would result in the correct intended operation of the interrupting device. While that is a noble intention, the measurable proof of such a requirement is immense. The intent is simply to check that the settings in the relay match the settings specified to those placed into the relay.

E. Are electromechanical relays included in the "Verify that settings are as specified" maintenance activity in Table 1-1?

Verification of settings is an activity directed towards the application of protection related functions of microprocessor based relays. Electromechanical relays require calibration verification by voltage and/or current injection, and thus the settings are verified during calibration activity. In the example of a time-overcurrent relay, a minor deviation in time dial, versus the settings, may be acceptable as long as the relay calibration is within accepted tolerances at the injected current amplitudes. A major deviation may require further investigation, as it could indicate a problem with the relay or an incorrect relay style for the application.

F. I use my protective relays only as sources of metered quantities and breaker status for SCADA and EMS through a substation distributed RTU or data concentrator to the control center. What are the maintenance requirements for the relays?

This standard addresses only devices "that are applied on, or are designed to provide protection for the BES." Protective relays, providing only the functions mentioned in the question, are not included.

G. I use my protective relays for fault and disturbance recording, collecting oscillographic records and event records via communications for fault analysis to meet NERC and DME requirements. What are the maintenance requirements for the relays?

For relays used only as disturbance monitoring equipment, the NERC standard PRC-018-1 R3 & R6 states the maintenance requirements, and is being addressed by a Standards activity that is revising PRC-002-1 and PRC-018-1. For protective relays "that are applied on, or are designed to provide protection for the BES," this standard applies, even if they also perform DME functions.

H. We have a number of installations where we have changed our Protection System components. Some of the changes were upgrades, but others were simply system rating changes that merely required taking relays "out-of-service". What are our responsibilities when it comes to "out-of-service" devices?

Assuming that your system up-rates, upgrades and overall changes meet any and all other requirements and standards then the requirements of PRC-005-2 are simple – if the Protection system component performs a Protection system function then it must be maintained. If the component no longer performs Protection System functions than it does not require maintenance activities under the Tables of PRC-005-2. While many entities might physically remove a component that is no longer needed there is no requirement in PRC-005-2 to remove such component(s). Obviously, prudence would dictate that an "out-of-service" device is truly made inactive. There are no record requirements listed in PRC-005-2 for Protection System components not used.

I. While performing relay testing of a protective device on our Bulk Electric System it was discovered that the protective device being tested was either broken or out of calibration.

Does this satisfy the relay testing requirement even though the protective device tested bad, and may be unable to be placed back into service?

Yes, PRC-005-2 requires entities to perform relay testing on protective devices on a given maintenance cycle interval. By performing this testing, the entity has satisfied PRC-005-2 requirement although the protective device may be unable to be returned to service under normal calibration adjustments. R4.3 states (the entity must):
The entity must assure either that the components are within acceptable parameters at the conclusion of the maintenance activities or initiate any necessary activities to correct unresolved maintenance correctable issues.

J. If I show the protective device out of service while it is being repaired then can I add it back as a new protective device when it returns? If not, my relay testing history would show that I was out of compliance for the last maintenance cycle.

The maintenance and testing requirements (R4.3) (in essence) state that the entity assure the components are within the owner's acceptable operating parameters, if not then actions must be initiated to correct the deviance. The type of corrective activity is not stated; however it could include repairs or replacements. Documentation is always a necessity ("*If it is not documented then it wasn't done!*")
Your documentation requirements will increase, of course, to demonstrate that your device tested bad and had corrective actions initiated. Your regional entity could very well ask for documentation showing status of your corrective actions.

K. What calibration tolerance should be applied on electromechanical relays?

Each entity establishes their own acceptable tolerances when applying protective relaying on their system. For some Protection System components, adjustment is required to bring measurement accuracy within the parameters established by the asset owner based on the specific application of the component. A calibration failure is the result if testing finds the specified parameters to be out of tolerance.

L. What is meant by "verify operation of the relay inputs and outputs that are essential to proper functioning of the Protection System?"

Any input or output that "affects the tripping" of the breaker is included in the scope of I/O to be verified. By "affects the tripping" one needs to realize that sometimes there are more Inputs and Outputs than simply the output to the trip coil. Many important protective functions include things like Breaker Fail Initiation, Zone Timer Initiation and sometimes even 52a/b contact inputs are needed for a protective relay to correctly operate.

Each input should be "picked up" or "turned on and off" and verified as changing state by the microprocessor of the relay. Each output should be "operated" or "closed and opened" from the microprocessor of the relay and the output should be verified to change state on the output terminals of the relay.

Each input detector on a component that is needed for a protective function and each output action from a component that is needed for a protective function needs to be tested.

In short, if an entity designed a scheme into the protective functions then that scheme needs to be tested.

3. Voltage and Current Sensing Device Inputs to Protective Relays

A. What is meant by "…verify the current and voltage circuit inputs from the voltage and current sensing devices to the protective relays …" Do we need to perform ratio, polarity and saturation tests every few years?

No. You must verify that the protective relay is receiving the expected values from the voltage and current sensing devices (typically voltage and current transformers). This can be as difficult as is proposed by the question (with additional testing on the cabling and substation wiring to ensure that the values arrive at the relays); or simplicity can be achieved by other verification methods. While some examples follow, these are not intended to represent an all-inclusive list; technology advances and ingenuity should not be excluded from making comparisons and verifications:

- Compare the secondary values, at the relay, to a metering circuit, fed by different current transformers, monitoring the same line as the questioned relay circuit.
- Compare the individual phase secondary values at the relay panel (with additional testing on the panel wiring to ensure that the values arrive at those relays) with the other phases, and verify that residual currents are within expected bounds
- Observe all three phase currents and the residual current at the relay panel with an oscilloscope, observing comparable magnitudes and proper phase relationship, with additional testing on the panel wiring to ensure that the values arrive at the relays.
- Compare the values, as determined by the questioned relay (such as, but not limited to, a query to the microprocessor relay), to another protective relay monitoring the same line, with currents supplied by different CT's.
- Compare the secondary values, at the relay with values measured by test instruments (such as, but not limited to multi-meters, voltmeter, clamp-on ammeters, etc) and verified by calculations and known ratios to be the values expected. For example a single PT on a 100KV bus will have a specific secondary value that when multiplied by the PT ratio arrives at the expected bus value of 100KV.
- Query SCADA for the power flows at the far end of the line protected by the questioned relay, compare those SCADA values to the values as determined by the questioned relay.
- Totalize the Watts and VARs on the bus and compare the totals to the values as seen by the questioned relay.

The point of the verification procedure is to ensure that all of the individual components are functioning properly; and that, an ongoing proactive procedure is in place to re-check the various components of the protective relay measuring systems.

B. The verification of phase current and voltage measurements by comparison to other quantities seems reasonable. How, though, can I verify residual or neutral currents, or 3V0 voltages, by comparison, when my system is closely balanced?

Since these inputs are verified at commissioning, maintenance verification requires ensuring that phase quantities are as expected and that 3IO and 3VO quantities appear equal to or close to 0.

These quantities also may be verified by use of oscillographic records for connected microprocessor relays as recorded during system disturbances. Such records may compare to similar values recorded at other locations by other microprocessor relays for the same event, or compared to expected values (from short circuit studies) for known fault locations.

C. Is wiring insulation or hi-pot testing required by this Maintenance Standard?

No, wiring insulation and equipment hi-pot testing are not specifically required by the Maintenance Standard. However, if the method of verifying CT and PT inputs to the relay involves some other method than actual observation of current and voltage transformer secondary inputs to the relay, it might be necessary to perform some sort of cable integrity test to verify that the instrument transformer secondary signals are actually making it to the relay and not being shunted off to ground. For instance, you could use CT excitation tests and PT turns ratio tests and compare to baseline values to verify that the instrument transformer outputs are acceptable. However, to conclude that these acceptable transformer instrument output signals are actually making it to the relay inputs, it also would be necessary to verify the insulation of the wiring between the instrument transformer and the relay.

D. My plant generator and transformer relays are electromechanical and do not have metering functions as do microprocessor based relays. In order for me to compare the instrument transformer inputs to these relays to the secondary values of other metered instrument transformers monitoring the same primary voltage and current signals, it would be necessary to temporarily connect test equipment like voltmeters and clamp on ammeters to measure the input signals to the relays. This practice seems very risky and a plant trip could result if the technician were to make an error while measuring these current and voltage signals. How can I avoid this risk? Also, what if no other instrument transformers are available which monitor the same primary voltage or current signal?

Comparing the input signals to the relays to the outputs of other independent instrument transformers monitoring the same primary current or voltage is just one method of verifying the instrument transformer inputs to the relays but is not required by the standard. Plants can choose how to best manage their risk. If online testing is deemed too risky, offline tests such as, but not limited to, CT excitation test and PT turns ratio tests can be compared to baseline data and be used in conjunction with CT and PT secondary wiring insulation verification tests to adequately "verify the current and voltage circuit inputs from the voltage and current sensing devices to the protective relays …" while eliminating the risk of tripping an in service generator or transformer. Similarly, this same offline test methodology can be used to verify the relay input voltage and current signals to relays when there are no other instrument transformers monitoring available for purposes of signal comparison.

4. Protection System Control Circuitry

A. Is it permissible to verify circuit breaker tripping at a different time (and interval) than when we verify the protective relays and the instrument transformers?

Yes, provided the entire Protective System is tested within the individual components' maximum allowable testing intervals.

B. The Protection System Maintenance Standard describes requirements for verifying the tripping of circuit breakers. What is this telling me about maintenance of circuit breakers?

Requirements in PRC-005-2 are intended to verify the integrity of tripping circuits, including the breaker trip coil, as well as the presence of auxiliary supply (usually a battery) for energizing the trip coil if a protection function operates. Beyond this, PRC-005-2 sets no requirements for verifying circuit breaker performance, or for maintenance of the circuit breaker.

C. How do I test each dc Control Circuit path, as established in Table 1-5 "Protection System Control Circuitry (Trip coils and auxiliary relays)"?

Table 1-5 specifies that each breaker trip coil, auxiliary relay, and lockout relay must be operated within the specified time period. The required operations may be via targeted maintenance activities, or by documented operation of these devices for other purposes such as fault clearing.

D. What does this standard require for testing an Auxiliary Tripping Relay?

Table 1 requires that the trip test must verify that the auxiliary tripping relay(s) and/or lockout relay(s) operate(s) electrically and that their trip output(s) perform as expected. Auxiliary outputs not in a trip path (i.e. annunciation or DME input) are not required, by this standard, to be checked.

E. What does a functional (or operational) trip test include?

An operational trip test must be performed on a trip device. Each control circuit path that produces a trip signal must be verified; this includes trip coils, auxiliary tripping relays, lockout relays, and communications-assisted-trip schemes.

A trip test may be an overall test that verifies the operation of the entire trip scheme at once, or it may be several tests of the various portions that make up the entire trip path, provided that testing of the various portions of the trip scheme verifies all of the portions, including parallel paths, and overlaps those portions.

A circuit breaker or other interrupting device needs to be trip tested at least once per trip coil.

Discrete-component auxiliary relays and lock-out relays must be verified by trip test. The trip test must verify that the auxiliary or lock-out relay operates electrically and that the relay's trip output(s) change(s) state. Software latches or control algorithms, including trip logic processing implemented as programming component such as a microprocessor relay that take the place of (conventional) discrete component auxiliary relays or lock-out relays do not have to be routinely trip tested.

Normally-closed auxiliary contacts from other devices (for example, switchyard-voltage-level disconnect switches, interlock switches, or pressure switches) which are in the breaker trip path do not need to be tested.

F. Is a Sudden Pressure Relay an Auxiliary Tripping Relay?

No. IEEE C37.2-2008 assigns the device number 94 to auxiliary tripping relays. Sudden pressure relays are assigned device number 63, and is excluded from the Standard because it does not utilize voltage and/or current measurements to determine anomalies. Devices that use anything other than electrical detection means are excluded.

G. The standard specifically mentions Auxiliary and Lock-out relays; what is an Auxiliary Tripping Relay?

An auxiliary relay, IEEE Device Number 94, is described in IEEE Standard C37.2-2008 as "A device that functions to trip a circuit breaker, contactor, or equipment; to permit immediate tripping by other devices; or to prevent immediate reclosing of a circuit interrupter if it should open automatically, even though its closing circuit is maintained closed."

H. What is a Lock-out Relay?

A lock-out relay, IEEE Device Number 86, is described in IEEE Standard C37.2 as "A device that trips and maintains the associated equipment or devices inoperative until it is reset by an operator, either locally or remotely."

I. My mechanical device does not operate electrically and does not have calibration settings; what maintenance activities apply?

You must conduct a test(s) to verify the integrity of the trip circuit. This standard does not cover circuit breaker maintenance or transformer maintenance. The standard also does not cover testing of devices such as sudden pressure relays (63), temperature relays (49), and other relays which respond to mechanical parameters rather than electrical parameters.

5. Station dc Supply

A. What constitutes the station dc supply as mentioned in the definition of Protective System?

The station direct current (dc) supply normally consists of two components: the battery charger and the station battery itself. There are also emerging technologies that provide a source of dc supply that does not include either a battery or charger.

Battery Charger - The battery charger is supplied by an available ac source. At a minimum, the battery charger must be sized to charge the battery (after discharge) and supply the constant dc load. In many cases, it may be sized also to provide sufficient dc current to handle the higher energy requirements of tripping breakers and switches when actuated by the protective relays in the Protection System.

Station Battery - Station batteries provide the dc power required for tripping and for supplying normal dc power to the station in the event of loss of the battery charger. There are several technologies of battery that require unique forms of maintenance as established in Table 1.

Emerging Technologies - Station dc supplies are currently being developed that use other energy storage technologies beside the station battery to prevent loss of the station dc supply when ac power is lost. Maintenance of these station dc supplies will require different kinds of tests and inspections. Table 1 presents maintenance activities and maximum allowable testing

intervals for these new station dc supply technologies. However, because these technologies are relatively new the maintenance activities for these station dc supplies may change over time.

B. In the Maintenance Activities for station dc supply in Table 1, what do you mean by "continuity"?

Because the Standard pertains to maintenance not only of the station battery, but also the whole station dc supply, continuity checks of the station dc supply are required. "Continuity" as used in Table 1 refers to verifying that there is a continuous current path from the positive terminal of the station battery set to the negative terminal, otherwise there is no way of determining that a station battery is available to supply dc current to the station.

The current path through a station battery from its positive to its negative connection to the dc control circuits is composed of two types of elements. These path elements are the electrochemical path through each of its cells and all of the internal and external metallic connections and terminations of the batteries in the battery set. If there is loss of continuity (an open circuit) in any part of the electrochemical or metallic path the battery set will not be available for service.

C. Why is it necessary to verify the continuity of the dc supply?

In the event of the loss of the ac source or battery charger, the battery must be capable of supplying dc current, both for continuous dc loads and for tripping breakers and switches. Without continuity, the battery cannot perform this function.

If the battery charger is not sized to handle the maximum dc current required to operate the protective systems, it is sized only to handle the constant dc load of the station and the charging current required to bring the battery back to full charge following a discharge. At those stations, the battery charger would not be able to trip breakers and switches if the battery experiences loss of continuity.

At generating stations and large transmission stations where battery chargers are capable of handling the maximum current required by the Protection System, there are still problems that could potentially occur when the continuity through the connected battery is interrupted.

- ◊ Many battery chargers produce harmonics which can cause failure of dc power supplies in microprocessor based protective relays and other electronic devices connected to station dc supply. In these cases, the substation battery serves as a filter for these harmonics. With the loss of continuity in the battery, the filter provided by the battery is no longer present.
- ◊ Loss of electrical continuity of the station battery will cause, regardless of the battery charger's output current capability, a delayed response in full output current from the charger. Almost all chargers have an intentional 1 to 2 second delay to switch from a low substation dc load current to the maximum output of the charger. This delay would cause the opening of circuit breakers to be delayed which could violate system performance standards.

D. How do you verify continuity of the dc supply?

Monitoring of the station dc supply voltage will not indicate that there is a problem with the dc current path through the battery unless the battery charger is taken out of service. At that time

a break in the continuity of the station battery current path will be revealed because there will be no voltage on the station dc circuitry.

Although the Standard prescribes what must be done during the maintenance activity it does not prescribe how the maintenance activity should be accomplished. There are several methods that can be used to verify the electrical continuity of the battery. These are not the only possible methods, simply a sampling of some methods:

- ◊ One method is to measure that there is current flowing through the battery itself by a simple clamp on milliamp-range ammeter. A battery is always either charging or discharging. Even when a battery is charged there is still a measurable float charge current that can be detected to verify that there is continuity in the electrical path through the battery.
- ◊ A simple test for continuity is to remove the battery charger from service and verify that the battery provides voltage and current to the dc system. However, the behavior of the various dc-supplied equipment in the station should be considered before using this approach.
- ◊ Manufacturers of microprocessor controlled battery chargers have developed methods for their equipment to periodically (or continuously) test for battery continuity. For example, one manufacturer periodically reduces the float voltage on the battery until current from the battery to the dc load can be measured to confirm continuity.
- ◊ Applying test current (as in an ohmic testing device) will provide a current that when measured elsewhere in the string, will prove that the circuit is continuous.

No matter how the electrical continuity of a battery set is verified it is a necessary maintenance activity that must be performed at the intervals prescribed by Table 1 to insure that the station dc supply has a path that can provide the required current to the Protection System at all times.

E. When should I check the station batteries to see if they have sufficient energy to perform as designed?

The answer to this question depends on the type of battery (valve regulated lead-acid, vented lead acid, or nickel-cadmium), the maintenance activity chosen, and the type of time based monitoring level selected.

For example, if you have a Valve Regulated Lead-Acid (VRLA) station battery, and you have chosen to evaluate the measured cell/unit internal ohmic values to the battery cell's baseline, you will have to perform verification at a maximum maintenance interval of no greater than every three months. While this interval might seem to be quite short, keep in mind that the 3 month interval is consistent with IEEE guidelines for VRLA batteries; this interval provides an accumulation of data that better shows when a VRLA battery is no longer capable of its design capacity.

If, for a VRLA station battery, you choose to conduct a performance capacity test on the entire station battery as the maintenance activity, then you will have to perform verification at a maximum maintenance interval of no greater than every 3 calendar years.

F. Why in Table 1 are there two Maintenance Activities with different Maximum Maintenance Intervals listed to verify that the station battery can perform as designed?

The two acceptable methods for proving that a station battery can perform as designed are based on two different philosophies. The first activity requires a capacity discharge test of the entire battery set to verify that degradation of one or several components (cells) in the set has not deteriorated to a point where the total capacity of the battery system falls below its designed rating. The second maintenance activity requires tests and evaluation of the internal ohmic measurements on each of the individual cells/units of the battery set to determine that each component can perform as designed and therefore the entire battery set can be verified to perform as designed.

The maximum maintenance interval for discharge capacity testing is longer than the interval for testing and evaluation of internal ohmic cell measurements. An individual component of a battery set may degrade to an unacceptable level without causing the total battery set to fall below its designed rating under capacity testing. However, since the philosophy behind internal ohmic measurement evaluation is based on the fact that each battery component must be verified to be able to perform as designed, the interval for verification by this maintenance activity must be shorter to catch individual cell/unit degradation. It should be noted that even if a battery unit is composed of multiple cells the ohmic test can still be accomplished. The data produced becomes trending data on the multi-cell unit instead of trending individual cells.

G. What is the justification for having two different Maintenance Activities listed in Table 1 to verify that the station battery can perform as designed?

IEEE Standards 450, 1188, and 1106 for vented lead-acid, valve-regulated lead-acid (VRLA), and nickel-cadmium batteries, respectively (which together are the most commonly used substation batteries on the BES) go into great detail about capacity testing of the entire battery set to determine that a battery can perform as designed.

The first maintenance activity listed in Table 1 for verifying that a station battery can perform as designed uses maximum maintenance intervals for capacity testing that were designed to align with the IEEE battery standards. This maintenance activity is applicable for vented lead-acid, valve-regulated lead-acid, and nickel-cadmium batteries.

The second maintenance activity listed in Table 1 for verifying that a station battery can perform as designed uses maximum maintenance intervals for evaluating internal ohmic measurements in relation to their baseline measurements that are based on industry experience, EPRI technical reports and application guides, and the IEEE battery standards. By evaluating the internal ohmic measurements for each cell and comparing that measurement to the cell's baseline ohmic measurement (taken at the time of the battery set's acceptance capacity test), low-capacity cells can be identified and eliminated to keep the battery set capable of performing as designed. This maintenance activity is applicable only for vented lead-acid and VRLA batteries; this trending activity has not shown to be effective for NiCd batteries thus the only choices for NiCd batteries are the performance tests (see applicable IEEE guideline for specifics on performance tests). It should be noted that even if a battery unit is composed of multiple cells the ohmic test can still be accomplished. The data produced becomes trending data on the multi-cell unit instead of trending individual cells.

H. Why in Table 1 of PRC-005-2 is there a maintenance activity to inspect the structural intergrity of the battery rack?

The three IEEE standards (1188, 450, and 1106) for VRLA, vented lead-acid, and nickel-cadmium batteries all recommend that as part of any battery inspection the battery rack should be inspected. The purpose of this inspection is to verify that the battery rack is correctly installed and has no deterioration that could weaken its structural integrity. Because the battery rack is specifically designed for the battery that is mounted on it, weakening of its structural members by rust or corrosion can physically jeopardize the battery.

I. What is required to comply with the "Unintentional Grounds" requirement?

In most cases, the first ground that appears on a battery is not a problem. It is the unintentional ground that appears on the opposite pole that becomes problematic. Even then many systems are designed to operate favorably under some unintentional DC ground situations. It is up to the owner of the Protection System to determine if corrective actions are needed on detected unintentional DC grounds. The standard merely requires that a check be made for the existence of Unintentional DC Grounds. Obviously a "check-off" of some sort will have to be devised by the inspecting entity to document that a check is routinely done for Unintentional DC Grounds.

J. Where the standard refers to "all cells" is it sufficient to have a documentation method that refers to "all cells" or do we need to have separate documentation for every cell? For example to I need 60 individual documented check-offs for good electrolyte level or would a single check-off per bank be sufficient?

A single check-off per battery bank is sufficient for documentation, as long as the single check-off attests to checking all cells/units.

K. Does this standard refer to Station batteries or all batteries, for example Communications Site Batteries?

This standard refers to Station Batteries. The drafting team does not believe that the scope of this standard refers to communications sites. The batteries covered under PRC-005-2 are the batteries that supply the trip current to the trip coils of the interrupting devices that are a part of the Protection System. The SDT believes that a loss of power to the communications systems at a remote site would cause the communications systems associated with protective relays to alarm at the substation. At this point the corrective actions can be initiated.

L. My VRLA batteries have multiple-cells within an individual battery jar (or unit); how am I expected to comply with the cell-to-cell ohmic measurement requirements on these units that I cannot get to?

The values that are measured at all available terminals will produce results that can be tracked. Thus the trended results become the results of a unit instead of an individual cell. Bad units (regardless of the number of cells per unit) will result in the eventual repair or replacement of multiple cells even if only a single cell actually went bad. Cell-to-cell tests can equate to unit-to-unit tests or jar-to-jar tests. If there is such a thing as a single unit that contains the entire battery for the facility but only brings out the positive and negative posts (as in a car battery) then the testing across these only two available posts will produce usable trending test data.

6. Protection System Communications Equipment

A. What are some examples of mechanisms to check communications equipment functioning?

For unmonitored Protection Systems, various types of communications systems will have different facilities for on-site integrity checking to be performed at least every three months during a substation visit. Some examples are, but not limited to:

- ◊ On-off power-line carrier systems can be checked by performing a manual carrier keying test between the line terminals, or carrier check-back test from one terminal.
- ◊ Systems which use frequency-shift communications with a continuous guard signal (over a telephone circuit, analog microwave system, etc.) can be checked by observing for a loss-of-guard indication or alarm. For frequency-shift power-line carrier systems, the guard signal level meter can also be checked.
- ◊ Hard-wired pilot wire line Protection Systems typically have pilot-wire monitoring relays that give an alarm indication for a pilot wire ground or open pilot wire circuit loop.
- ◊ Digital communications systems typically have a data reception indicator or data error indicator (based on loss of signal, bit error rate, or frame error checking).

For monitored Protection Systems, various types of communications systems will have different facilities for monitoring the presence of the communications channel, and activating alarms that can be monitored remotely. Some examples are, but not limited to:

- ◊ On-off power-line carrier systems can be shown to be operational by automated periodic power-line carrier check-back tests, with remote alarming of failures.
- ◊ Systems which use a frequency-shift communications with a continuous guard signal (over a telephone circuit, analog microwave system, etc.) can be remotely monitored with a loss-of-guard alarm or low signal level alarm.
- ◊ Hard-wired pilot wire line Protection Systems can be monitored by remote alarming of pilot-wire monitoring relays.
- ◊ Digital communications systems can activate remotely monitored alarms for data reception loss or data error indications.
- ◊ Systems can be queried for the data error rates.

For the highest degree of monitoring of Protection Systems, the communications system must monitor all aspects of the performance and quality of the channel that show it meets the design performance criteria, including monitoring of the channel interface to protective relays.

- ◊ In many communications systems signal quality measurements including signal-to-noise ratio, received signal level, reflected transmitter power or standing wave ratio, propagation delay, and data error rates are compared to alarm limits. These alarms are connected for remote monitoring.
- ◊ Alarms for inadequate performance are remotely monitored at all times, and the alarm communications system to the remote monitoring site must itself be continuously monitored to assure that the actual alarm status at the communications equipment location is continuously being reflected at the remote monitoring site.

B. What is needed for the 3-month inspection of communications-assisted trip scheme equipment?

The 3-month inspection applies to unmonitored equipment. An example of compliance with this requirement might be, but is not limited to:

With each site visit, check that the equipment is free from alarms, check any metered signal levels, and that power is still applied. While this might be explicit for a particular type of equipment (i.e., FSK equipment), the concept should be that the entity verify that the communications equipment that is used in a Protection System is operable through a cursory inspection and site visit. This site visit can be eliminated on this particular example if the FSK equipment had a monitored alarm on Loss of Guard.

C. Does a fiber optic I/O scheme used for breaker tripping or control within a station, for example - transmitting a trip signal or control logic between the control house and the breaker control cabinet, constitute a communications system?

This equipment is presently classified as being part of the Protection System Control Circuitry and tested per the portions of Table 1 applicable to Protection System Control Circuitry rather than those portions of the table applicable to communications equipment.

D. In Table 1-2, the Maintenance Activities section of the Protective System Communications Equipment and Channels refers to the quality of the channel meeting "performance criteria". What is meant by performance criteria?

Protection System communications channels must have a means of determining if the channel and communications equipment is operating normally. If the channel is not operating normally an alarm will be indicated. For unmonitored systems this alarm will probably be on the panel. For monitored systems, the alarm will be transmitted to a remote location.

Each entity will have established a nominal performance level for each protective system communications channel that is consistent with proper functioning of the Protection System. If that level of nominal performance is not being met, the system will go into alarm. Following are some examples of protective system communications channel performance measuring:

- ◊ For direct transfer trip using a frequency shift power line carrier channel, a guard level monitor is part of the equipment. A normal receive level is established when the system is calibrated and if the signal level drops below an established level, the system will indicate an alarm.
- ◊ An on-off blocking signal over power line carrier is used for directional comparison blocking schemes on transmission lines. During a fault, block logic is sent to the remote relays by turning on a local transmitter and sending the signal over the power line to a receiver at the remote end. This signal is normally off so continuous levels cannot be checked. These schemes use check-back testing to determine channel performance. A predetermined signal sequence is sent to the remote end and the remote end decodes this signal and sends a signal sequence back. If the sending end receives the correct information from the remote terminal, the test passes and no alarm is indicated. Full power and reduced power tests are typically run. Power levels for these tests are determined at the time of calibration.
- ◊ Pilot wire relay systems use a hardwire communications circuit to communicate between the local and remote ends of the protective zone. This circuit is monitored by circulating a dc current between the relay systems. A typical level may be 1 mA. If the level drops below the setting of the alarm monitor, the system will indicate an alarm.

◊ Modern digital relay systems use data communications to transmit relay information to the remote end relays. An example of this is a line current differential scheme commonly used on transmission lines. The protective relays communicate current magnitude and phase information over the communications path to determine if the fault is located in the protective zone. Quantities such as digital packet loss, bit error rate and channel delay are monitored to determine the quality of the channel. These limits are determined and set during relay commissioning. Once set, any channel quality problems that fall outside the set levels will indicate an alarm.

The previous examples show how some protective relay communications channels can be monitored and how the channel performance can be compared to performance criteria established by the entity. This standard does not state what the performance criteria will be - it just requires that the entity establish nominal criteria so protective system channel monitoring can be performed.

7. UVLS and UFLS Relays that Comprise a Protection System Distributed Over the Power System

A. We have an Under Voltage Load Shedding (UVLS) system in place that prevents one of our distribution substations from supplying extremely low voltage in the case of a specific transmission line outage. The transmission line is part of the BES. Does this mean that our UVLS system falls within this standard?

The situation as stated indicates that the tripping action was intended to prevent low distribution voltage to a specific load from a transmission system that was intact except for the line that was out of service, as opposed to preventing cascading outage or transmission system collapse.

This Standard is not applicable to this UVLS.

B. We have a UFLS scheme that sheds the necessary load through distribution-side circuit breakers and circuit reclosers. Do the trip-test requirements for circuit breakers apply to our situation?

No. Distributed tripping schemes would have to exhibit multiple failures to trip before they would prove to be significant as opposed to a single failure to trip of, for example, a Transmission Protection System Bus Differential Lock-Out Relay. While many failures of these distribution breakers could add up to be significant, it is also believed that distribution breakers are operated often on just fault clearing duty and therefore the distribution circuit breakers are operated at least as frequently as any requirements that might have appeared in this standard.

C. What does “distributed over the power system” mean?

This refers to the common practice of applying UFLS on the distribution system, with each UFLS individually tripping a relatively low value of load. Therefore, the program is implemented via a large number of individual UFLS components performing independently, and the failure of any individual component to perform properly will have a minimal impact on the effectiveness of the overall UFLS program. Some UVLS systems are applied similarly.

8. SPS or Relay Sensing for Centralized UFLS or UVLS

A. Do I have to perform a full end-to-end test of a Special Protection System?

No. All portions of the SPS need to be maintained, and the portions must overlap, but the overall SPS does not need to have a single end-to-end test.

B. What about SPS interfaces between different entities or owners?

All SPS owners should have maintenance agreements that state which owner will perform specific tasks. As in all of the Protection System requirements, SPS segments can be tested individually thus minimizing the need to accommodate complex maintenance schedules.

C. What do I have to do if I am using a phasor measurement unit (PMU) as part of a Protection System or Special Protection System?

Any Phasor Measurement Unit (PMU) function whose output is used in a Protection System or Special Protection System (as opposed to a monitoring task) must be verified as a component in a Protection System.

D. How do I maintain a Special Protection System or Relay Sensing for Centralized UFLS or UVLS Systems?

Since components of the SPS, UFLS, or UVLS are the same types of components as those in Protection Systems then these components should be maintained like similar components used for other Protection System functions. In many cases the devices for SPS, UFLS and UVLS are also used for other protective functions. The same maintenance activities apply with the exception that distributed systems (UFLS and UVLS) have fewer dc supply and control circuitry maintenance activity requirements.

For the testing of the output action, verification may be by breaker tripping, but may be verified in overlapping segments. For example an SPS that trips a remote circuit breaker might be tested by testing the various parts of the scheme in overlapping segments. Another method is to document the real-time tripping of an SPS scheme should that occur. Forced trip tests of circuit breakers (etc) that are a part of distributed UFLS or UVLS schemes are not required

E. What does “centralized” mean?

This refers to the practice of applying sensing units at many locations over the system, with all these components providing intelligence to an analytical system which then directs action to address a detected condition. In some cases, this action may not take place at the same location as the sensing units. This approach is often applied for complex SPS, and may be used for UVLS (and perhaps even with UFLS) where necessary to address the conditions of concern.

III Group by Type of BES Facility:

1. All BES Facilities

A. What, exactly, is the BES, or Bulk Electric System?

BES is the abbreviation for Bulk Electric System. BES is a term in the Glossary of Terms Used in Reliability Standards, and is not being modified within this draft Standard.

NERC's approved definition of Bulk Electric System is:

> As defined by the Regional Reliability Organization, the electrical generation resources, transmission lines, interconnections with neighboring systems, and associated equipment, generally operated at voltages of 100 kV or higher. Radial transmission facilities serving only load with one transmission source are generally not included in this definition.

Each Regional Entity implements a definition of the Bulk Electric System that is based on this NERC definition, in some cases, supplemented by additional criteria. These regional definitions have been documented and provided to FERC as part of a *June 16, 2007 Informational Filing*.

2. Generation

A. Please provide a sample list of devices or systems that must be verified in a generator, generator step-up transformer, and generator connected station auxiliary transformer to meet the requirements of this Maintenance Standard.

Examples of typical devices and systems that may directly trip the generator, or trip through a lockout relay may include but are not necessarily limited to:

- Fault protective functions, including distance functions, voltage-restrained overcurrent functions, or voltage-controlled overcurrent functions
- Loss-of-field relays
- Volts-per-hertz relays
- Negative sequence overcurrent relays
- Over voltage and under voltage protection relays
- Stator-ground relays
- Communications-based protection systems such as transfer-trip systems
- Generator differential relays
- Reverse power relays
- Frequency relays
- Out-of-step relays
- Inadvertent energization protection
- Breaker failure protection

For generator step up or generator-connected station auxiliary transformers, operation of any the following associated protective relays frequently would result in a trip of the generating unit and, as such, would be included in the program:

- Transformer differential relays
- Neutral overcurrent relay
- Phase overcurrent relays

A loss of a system-connected station auxiliary transformer could result in a loss of the generating plant if the plant was being provided with auxiliary power from that source, and this auxiliary transformer may directly affect the ability to start up the plant and to connect the plant

to the system. Thus, operation of any of the following relays associated with system-connected station auxiliary transformers would be included in the program:

- Transformer differential relays
- Neutral overcurrent relay
- Phase overcurrent relays

Relays which trip breakers serving station auxiliary loads such as pumps, fans, or fuel handling equipment, etc., need not be included in the program even if the loss of the those loads could result in a trip of the generating unit. Furthermore, relays which provide protection to secondary unit substation (SUS) or low switchgear transformers and relays protecting other downstream plant electrical distribution system components are not included in the scope of this program even if a trip of these devices might eventually result in a trip of the generating unit. For example, a thermal overcurrent trip on the motor of a coal-conveyor belt could eventually lead to the tripping of the generator, but it does not cause the trip.

3. Transmission

A. Why is Distribution Provider included within the Applicable Entities and as a responsible entity within several of the requirements? Wouldn't anyone having relevant facilities be a Transmission Owner?

Depending on the station configuration of a particular substation, there may be Protection System equipment installed at a non-transmission voltage level (Distribution Provider equipment) that is wholly or partially installed to protect the BES. PRC-005-2 would apply to this equipment. An example is underfrequency load-shedding, which is frequently applied well down into the distribution system to meet PRC-007-0.

IV Group by Type of Maintenance Program:

1. All Protection System Maintenance Programs

A. I can't figure out how to demonstrate compliance with the requirements for the highest level of monitoring of Protection Systems. Why does this Maintenance Standard describe a maintenance program approach I cannot achieve?

Demonstrating compliance with the requirements for the highest level of monitoring any particular component of Protection Systems is likely to be very involved, and may include detailed manufacturer documentation of complete internal monitoring within a device, comprehensive design drawing reviews, and other detailed documentation. This Standard does not presume to specify what documentation must be developed; only that it must be documented.

There may actually be some equipment available that is capable of meeting these highest levels of monitoring criteria, in which case it may be maintained according to the highest level of monitoring shown on the Tables. However, even if there is no equipment available today that can meet this level of monitoring; the Standard establishes the necessary requirements for when such equipment becomes available.

By creating a roadmap for development, this provision makes the Standard technology-neutral. The standard drafting team wants to avoid the need to revise the Standard in a few years to accommodate technology advances that are certainly coming to the industry.

B. What forms of evidence are acceptable?

Acceptable forms of evidence, as relevant for the Requirement being documented, include but are not limited to:

- Process documents or plans
- Data (such as relay settings sheets, photos, SCADA, and test records)
- Database lists, records and/or screen shots that demonstrate compliance information
- Prints, diagrams and/or schematics
- Maintenance records
- Logs (operator, substation, and other types of log)
- Inspection forms
- Mail, memos, or email proving the required information was exchanged, coordinated, submitted or received
- Check-off forms (paper or electronic)
- Any record that demonstrates that the maintenance activity was known, accounted for, and/or performed.

C. If I replace a failed Protection System component with another component, what testing do I need to perform on the new component?

The replacement component must be tested to a degree that assures that it will perform as intended. If it is desired to reset the Table 1 maintenance interval for the replacement component, all relevant Table 1 activities for the component should be performed.

D. Please use a specific example to demonstrate the data retention requirements.

The data retention requirements are intended to allow the availability of maintenance records to demonstrate that the time intervals in your maintenance plan were upheld. For example: "Company A" has a maintenance plan that requires its electro-mechanical protective relays be tested, for routine scheduled tests, every 3 calendar years with a maximum allowed grace period of an additional 18 months. This entity would be required to maintain its records of maintenance of its last two routine scheduled tests. Thus its test records would have a latest routine test as well as its previous routine test. The interval between tests is therefore provable to an auditor as being within "Company A's" stated maximum time interval of 4.5 years.

The intent is not to require three test results proving two time intervals, but rather have two test results proving the last interval. The drafting team contends that this minimizes storage requirements while still having minimum data available to demonstrate compliance with time intervals.

Realistically, the Standard is providing advanced notice of audit team documentation requests; this type of information has already been requested by auditors.

If an entity prefers to utilize Performance Based Maintenance then statistical data may well be retained for extended periods to assist with future adjustments in time intervals.

2. Time-Based Protection System Maintenance (TBM) Programs

A. What does this Maintenance Standard say about commissioning? Is it necessary to have documentation in your maintenance history of the completion of commission testing?

This standard does not establish requirements for commission testing. Commission testing includes all testing activities necessary to conclude that a facility has been built in accordance with design. While a thorough commission testing program would include, either directly or indirectly, the verification of all those Protection System attributes addressed by the maintenance activities specified in the Tables of PRC-005-2, verification of the adequacy of initial installation necessitates the performance of testing and inspections that go well beyond these routine maintenance activities. For example, commission testing might set baselines for future tests; perform acceptance tests and/or warranty tests; utilize testing methods that are not generally done routinely like staged-fault-tests.

However, many of the Protection System attributes which are verified during commission testing are not subject to age related or service related degradation and need not be re-verified within an ongoing maintenance program. Example – it is not necessary to re-verify correct terminal strip wiring on an ongoing basis.

PRC-005-2 assumes that thorough commission testing was performed prior to a protection system being placed in service. PRC-005-2 requires performance of maintenance activities that are deemed necessary to detect and correct plausible age and service related degradation of components such that a properly built and commission tested Protection System will continue to function as designed over its service life.

It should be noted that commission testing frequently is performed by a different organization than that which is responsible for the ongoing maintenance of the Protection System. Furthermore, the commission testing activities will not necessarily correlate directly with the maintenance activities required by the standard. As such, it is very likely that commission testing records will deviate significantly from maintenance records in both form and content and therefore, it is not necessary to maintain commission testing records within the maintenance program documentation.

Notwithstanding the differences in records, an entity would be wise to retain commissioning records to show a maintenance start date. (See next FAQ).

B. How do you determine the initial due date for maintenance?

The initial due date for maintenance should be based upon when a facility and its associated Protection System were placed in service. Alternatively, an entity may choose to use the date of completion of the commission testing of the Protection System component as the starting point in determining its first maintenance due dates. Whichever method is chosen, for newly installed Protection Systems the maintenance program should clearly identify when maintenance is first due.

It is conceivable that there can be a (substantial) difference in time between the date of testing as compared to the date placed into service. The use of the “Calendar Year” language can help determine the next due date without too much concern about being non-compliant for missing test dates by a small amount (provided your dates are not already at the end of a year). However, if there is a substantial amount of time difference between testing and in-service dates then the testing date should be followed because it is the degradation of components that is the concern. While accuracy fluctuations may decrease when components are not energized

there are cases when degradation can take place even though the device is not energized. Minimizing the time between commissioning tests and in-service dates will help.

C. The established maximum allowable intervals do not align well with the scheduled outages for my power plant. Can I extend the maintenance to the next scheduled outage following the established maximum interval?

No. You must complete your maintenance within the established maximum allowable intervals in order to be compliant. You will need to schedule your maintenance during available outages to complete your maintenance as required, even if it means that you may do protective relay maintenance more frequently than the maximum allowable intervals. The maintenance intervals were selected with typical plant outages, among other things, in mind.

D. If I am unable to complete the maintenance as required due to a major natural disaster (hurricane, earthquake, etc), how will this affect my compliance with this standard.

The Sanction Guidelines of the North American Electric Reliability Corporation effective January 15, 2008 provides that the Compliance Monitor will consider extenuating circumstances when considering any sanctions.

E. What if my observed testing results show a high incidence of out-of-tolerance relays, or, even worse, I am experiencing numerous relay misoperations due to the relays being out-of-tolerance?

The established maximum time intervals are mandatory only as a not-to-exceed limitation. The establishment of a maximum is measurable. But, any entity can choose to test some or all of their Protection System components more frequently (or, to express it differently, exceed the minimum requirements of the Standard). Particularly, if you find that the maximum intervals in the Standard do not achieve your expected level of performance, it is understandable that you would maintain the related equipment more frequently. A high incidence of relay Misoperations is in no one's best interest. The BES and an entity's bottom line both suffer.

F. We believe that the 3-month interval between inspections is unneccessary, why can we not perform these inspections twice per year?

The standard drafting team believes that routine monthly inspections are the norm. To align routine station inspections with other important inspections the 3-month interval was chosen. In lieu of station visits many activities can be accomplished with automated monitoring and alarming.

G. Our maintenance plan calls for us to perform routine protective relay tests every 3 years; if we are unable to achieve this schedule but we are able to complete the procedures in less than the Maximum Time Interval then are we in or out of compliance?

You are out of compliance. You must maintain your equipment to your stated intervals within your maintenance plan. The protective relays (and any Protection System component) cannot be tested at intervals that are longer than the maximum allowable interval stated in the Tables and yet you must conform to your own maintenance plan. Therefore you should design your maintenance plan such that it is not in conflict with the Minimum Activities and the Maximum Intervals. You then must maintain your equipment according to your maintenance plan. You will end up being compliant with both the standard and your own plan.

H. How do I achieve a "grace period" without being out of compliance?

For the purposes of this example, concentrating on just unmonitored protective relays, because there are more relays out there than anything else – Table 1-1 specifies a maximum time interval (between the mandated maintenance activities) of 6 calendar years. Your plan must ensure that your unmonitored relays are tested at least once every 6 calendar years. You could, within your PSMP, require that your unmonitored relays be tested every 4 calendar years with a maximum allowable time extension of 18 calendar months. This allows an entity to have deadlines set for the auto-generation of work orders but still have the flexibility in scheduling complex work schedules. This also allows for that 18 calendar months to act as a buffer, a grace period, in the event of unforeseen events. You will note that this example of a maintenance plan interval has a planned time of 4 years; it also has a built-in time extension allowed within the PSMP and yet does not exceed the maximum time interval allowed by the standard. So while there are no time extensions allowed beyond the standard, an entity can still have substantial flexibility to maintain their Protection System components.

I. If I miss two battery inspections four times out of 100 protection system components on my transmission system, does that count as 2 percent or 8 percent when counting Violation Severity Level (VSL) for R4?

The entity failed to complete its scheduled program on two of its one hundred protection system components which would equate to two percent for application to the VSL Table for Requirement R4.

3. Performance-Based Protection System Maintenance (PBM) Programs

A. I'm a small entity and cannot aggregate a population of Protection System components to establish a segment required for a Performance-Based Protection System Maintenance Program. How can I utilize that opportunity?

Multiple asset owning entities may aggregate their individually owned populations of individual Protection System components to create a segment that crosses ownership boundaries. All entities participating in a joint program should have a single documented joint management process, with consistent Protection System Maintenance Programs (practices, maintenance intervals and criteria), for which the multiple owners are individually responsible with respect to the requirements of the Standard. The requirements established for performance-based maintenance must be met for the overall aggregated program on an ongoing basis.

The aggregated population should reflect all factors that affect consistent performance across the population, including any relevant environmental factors such as geography, power-plant vs. substation, and weather conditions.

B. Can an owner go straight to a performance-based maintenance program schedule, if they have previously gathered records?

Yes. An owner can go to a performance-based maintenance program immediately. The owner will need to comply with the requirements of a performance-based maintenance program as listed in the standard. Gaps in the data collected will not be allowed; therefore, if an owner finds that a gap exists such that they cannot prove that they have collected the data as required for a performance-based maintenance program then they will need to wait until they can prove compliance.

C. When establishing a performance-based maintenance program, can I use test data from the device manufacturer, or industry survey results, as results to help establish a basis for my performance-based intervals?

No. You must use actual in-service test data for the components in the segment.

D. What types of misoperations or events are not considered countable events in the performance-based Protection System Maintenance (PBM) Program?

Countable events are intended to address conditions that are attributed to hardware failure or calibration failure; that is, conditions that reflect deteriorating performance of the component. These conditions include any condition where the device previously worked properly, then, due to changes within the device, malfunctioned.

For this purpose of tracking hardware issues, human errors resulting in Protection System misoperations during system installation or maintenance activities are not considered countable events. Examples of excluded human errors include relay setting errors, design errors, wiring errors, inadvertent tripping of devices during testing or installation, and misapplication of Protection System components. Examples of misapplication of Protection System components include wrong CT or PT tap position, protective relay function misapplication, and components not specified correctly for their installation. Obviously, if one is setting up relevant data about hardware failures then human failures should be eliminated from the hardware performance analysis.

One example of human-error is not pertinent data might be in the area of testing "86" Lock-Out Relays (LOR). "Entity A" has two types of LOR's type "X" and type "Y"; they want to move into a performance based maintenance interval. They have 1000 of each type, so the population variables are met. During electrical trip testing of all of their various schemes over the initial six-year interval they find zero type "X" failures, but human error led to tripping a BES element 100 times; they find 100 type "Y" failures and had an additional 100 human-error caused tripping incidents. In this example the human-error caused misoperations should not be used to judge the performance of either type of LOR. Analysis of the data might lead "Entity A" to change time intervals. Type "X" LOR can be placed into extended time interval testing because of its low failure rate (zero failures) while Type "Y" would have to be tested more often than every 6 calendar years (100 failures divided by 1000 units exceeds the 4% tolerance level).

Certain types of Protection System component errors that cause misoperations are not considered countable events. Examples of excluded component errors include device malfunctions that are correctable by firmware upgrades and design errors that do not impact protection function.

E. What are some examples of methods of correcting segment perfomance for Performance-Based Maintenance?

There are a number of methods that may be useful for correcting segment performance for mal-performing segments in a performance-based maintenance system. Some examples are listed below.

- The maximum allowable interval, as established by the performance-based maintenance system, can be decreased. This may, however, be slow to correct the performance of the segment.
- Identifiable sub-groups of components within the established segment, which have been identified to be the mal-performing portion of the segment, can be broken out as an independent segment for target action. Each resulting segment must satisfy the minimum population requirements for a performance-based maintenance program in order to remain within the program.
- Targeted corrective actions can be taken to correct frequently occurring problems. An example would be replacement of capacitors within electromechanical distance relays if bad capacitors were determined to be the cause of the mal-performance.
- Components within the mal-performing segment can be replaced with other components (electromechanical distance relays with microprocessor relays, for example) to remove the mal-performing segment.

F. If I find (and correct) a maintenance-correctable issue as a result of a misoperation investigation (Re: PRC-004), how does this affect my performance-based maintenance program?

If you perform maintenance on a Protection System component for any reason (including as part of a PRC-004 required misoperation investigation/corrective action), the actions performed can count as a maintenance activity, and "reset the clock" on everything you've done. In a performance-based maintenance program, you also need to record the maintenance-correctable issue with the relevant component group and use it in the analysis to determine your correct performance-based maintenance interval for that component group. Note that "resetting the clock" should not be construed as interfering with an entity's routine testing schedule because the "clock-reset" would actually make for a decreased time interval by the time the next routine test schedule comes around.

For example a relay scheme, consisting of 4 relays, is tested on 1-1-11 and the PSMP has a time interval of 3 calendar years with an allowable extension of 1 calendar year. The relay would be due again for routine testing before the end of the year 2015. This mythical relay scheme has a misoperation on 6-1-12 that points to one of the four relays as bad. Investigation proves a bad relay and a new one is tested and installed in place of the original. This replacement relay actually could be retested before the end of the year 2016 (clock-reset) and not be out of compliance. This requires tracking maintenance by individual relays and is allowed. However, many companies schedule maintenance in other ways like by substation or by circuit breaker or by relay scheme. By these methods of tracking maintenance that "replaced relay" will be retested before the end of the year 2015. This is also acceptable. In no case was a particular relay tested beyond the PSMP of 4 years max, nor was the 6 year max of the standard exceeded. The entity can reset the clock if they desire or the entity can continue with original schedules and, in effect, test even more frequently.

G. Why are batteries excluded from PBM? What about exclusion of batteries from condition based maintenance?

Batteries are the only element of a Protection System that is a perishable item with a shelf life. As a perishable item batteries require not only a constant float charge to maintain their freshness (charge), but periodic inspection to determine if there are problems associated with their aging process and testing to see if they are maintaining a charge or can still deliver their rated output as required.

Besides being perishable, a second unique feature of a battery that is unlike any other Protection System element is that a battery uses chemicals, metal alloys, plastics, welds, and bonds that must interact with each other to produce the constant dc source required for Protection Systems, undisturbed by ac system disturbances.

No type of battery manufactured today for Protection System application is free from problems that can only be detected over time by inspection and test. These problems can arise from variances in the manufacturing process, chemicals and alloys used in the construction of the individual cells, quality of welds and bonds to connect the components, the plastics used to make batteries and the cell forming process for the individual battery cells.

Other problems that require periodic inspection and testing can result from transportation from the factory to the job site, length of time before a charge is put on the battery, the method of installation, the voltage level and duration of equalize charges, the float voltage level used, and the environment that the battery is installed in.

All of the above mentioned factors and several more not discussed here are beyond the control of the Functional Entities that want to use a performance-based Protection System Maintenance (PBM) program. These inherent variances in the aging process of a battery cell make establishment of a designated segment based on manufacturer and type of battery impossible.

The whole point of PBM is that if all variables are isolated then common aging and performance criteria would be the same. However, there are too many variables in the electro-chemical process to completely isolate all of the performance-changing criteria.

Similarly Functional Entities that want to establish a condition-based maintenance program using the highest levels of monitoring; resulting in the least amount of hands-on maintenance activity, of the battery used in a station dc supply cannot completely eliminate some periodic maintenance. Inspection of the battery is required on a Maximum Maintenance Interval listed in the tables due to the aging processes of station batteries. However, higher degrees of monitoring of a battery can eliminate the requirement for some periodic testing and some inspections (see Table 1-4).

H. Please provide an example of the calculations involved in extending maintenance time intervals using PBM.

Entity has 1000 GE-HEA lock-out relays; this is greater than the minimum sample requirement of 60

They start out testing all of the relays within the prescribed Table requirements (6 year max) by testing the relays every 5 years. The entity's plan is to test 200 units per year; this is greater than the minimum sample size requirement of 30.

For the sake of example only the following will show 6 failures per year, reality may well have different numbers of failures every year. PBM requires annual assessment of failures found per units tested.

After the first year of tests the entity finds 6 failures in the 200 units tested. 6/200= 3% failure rate.

This entity is now allowed to extend the maintenance interval if they choose.

The entity chooses to extend the maintenance interval of this population segment out to 10 years.

This represents a rate of 100 units tested per year; entity selects 100 units to be tested in the following year.

After that year of testing these 100 units the entity again finds 6 failed units. 6/100= 6% failures.

This entity has now exceeded the acceptable failure rate for these devices and must accelerate testing of all of the units at a higher rate such that the failure rate is found to be less than 4% per year; the entity has three years to get this failure rate down to 4% or less (per year).

In response to the 6% failure rate, the entity decreases the testing interval to 8 years. This means that they will now test 125 units per year (1000/8). The entity has just two years left to get the test rate corrected.

After a year they again find 6 failures out of the 125 units tested. 6/125= 5% failures.

In response to the 5% failure rate, the entity decreases the testing interval to 7 years. This means that they will now test 143 units per year (1000/7). The entity has just one year left to get the test rate corrected.

After a year they again find 6 failures out of the 143 units tested. 6/143= 4.2% failures.

(Note that the entity has tried 5 years and they were under the 4% limit and they tried 7 years and they were over the 4% limit. They must be back at 4% failures or less in the next year so they might simply elect to go back to 5 years.)

Instead, in response to the 5% failure rate, the entity decreases the testing interval to 6 years. This means that they will now test 167 units per year (1000/6).

After a year they again find 6 failures out of the 167 units tested. 6/167= 3.6% failures.

Entity found that they could maintain the failure rate at no more than 4% failures by maintaining the testing interval at 6 years or less. Entity chose 6 year interval and effectively extended their TBM (5 years) program by 20%.

A note of practicality is that an entity will probably be in better shape to lengthen the intervals between tests if the failure rate is less than 2%. But the requirements allow for annual adjustments if the entity desires. As a matter of maintenance management, an ever-changing test rate (units tested / year) may be un-workable.

Note that the “5% of components” requirement effectively sets a practical limit of 20 year maximum PBM interval. Also of note is the “3 years” requirement; this is there to prevent an entity from “gaming the system”. An entity might arbitrarily extend time intervals from 6 years to 20 years. In the event that an entity finds a failure rate greater than 4% then the test rate must be accelerated such that within three years the failure rate must be brought back down to 4% or less.

Here is a table that demonstrates the values discussed:

Year #	Total Population (P)	Test Interval (I)	Units to be Tested (U= P/I)	# of Failures Found (F)	Failure Rate (=F/U)	Decision to Change Interval Yes or No	Interval Chosen
1	1000	5 yrs	200	6	3%	Yes	10 yrs
2	1000	10 yrs	100	6	6%	Yes	8 yrs
3	1000	8 yrs	125	6	5%	Yes	7 yrs
4	1000	7 yrs	143	6	4.2%	Yes	6 yrs
5	1000	6 yrs	167	6	3.6%	No	6 yrs

V Group by Monitoring Level:

1. All Monitoring Levels

A. Please provide an example of the unmonitored versus other levels of monitoring available?

An unmonitored Protection System has no monitoring and alarm circuits on the Protection System components. A Protection System component that has monitoring attributes but no alarm output connected is considered to be un-monitored.

A monitored Protection System or an individual monitored component of a Protection System has monitoring and alarm circuits on the Protection System components. The alarm circuits must alert, within 24 hours, a location wherein corrective action can be initiated. This location might be, but not limited to an Operations Center, Dispatch Office, Maintenance Center or even a portable SCADA system.

There can be a combination of monitored and unmonitored Protection Systems within any given scheme, substation or plant; there can also be a combination of monitored and unmonitored components within any given Protection System.

Example #1: A combination of monitored and unmonitored components within a given Protection System might be:

- ◊ A microprocessor relay with an internal alarm connected to SCADA to alert 24-hr staffed operations center. (monitored)
- ◊ Instrumentation transformers, with no monitoring, connected as inputs to that relay. (unmonitored)
- ◊ A vented lead-acid battery with low voltage alarm and unintentional grounds detection alarm connected to SCADA. (monitored except for electrolyte level)

◊ A circuit breaker with a trip coil and the trip circuit is not monitored. (unmonitored)

Given the particular components and conditions, and using the Table 1 ("Maximum Allowable Testing Intervals and Maintenance Activities"), the particular components have maximum activity intervals of:

◊ Every 3 calendar months check electrolyte level (cell voltage and unintentional ground detection is being maintained more frequently by the monitoring system).
◊ Every 18 calendar months check battery bank ohmic values (if performance tests are not opted), battery float voltage and battery rack integrity.
◊ Every 6 calendar years battery performance test (if ohmic tests are not opted), battery charger alarms verified and trip test circuit breakers, electro-mechanical lock-out relays and auxiliary relays.
◊ Every 12 calendar years the microprocessor relay, the instrumentation transformers and the control circuitry are verified.

Example #2: A combination of monitored and unmonitored components within a given Protection System might be:

◊ A microprocessor relay with integral alarm that is not connected to SCADA. (unmonitored)
◊ Instrument transformers, with no monitoring, connected as inputs to that relay. (monitored)
◊ A vented lead-acid battery with low voltage and ground-detection alarms connected to SCADA. (monitored except for electrolyte level)
◊ A circuit breaker with a trip coil, with no circuits monitored. (unmonitored)

Given the particular components and conditions, and using the Table 1 ("Maximum Allowable Testing Intervals and Maintenance Activities"), the particular components have maximum activity intervals of:

◊ Every 3 calendar months check electrolyte level (cell voltage and unintentional ground detection is being maintained more frequently by the monitoring system).
◊ Every 18 calendar months check battery bank ohmic values (if performance tests are not opted), battery float voltage and battery rack integrity.
◊ Every 6 calendar years microprocessor relay is verified, battery performance test (if ohmic tests are not opted), battery charger alarms verified and trip test circuit breakers, electro-mechanical lock-out relays and auxiliary relays.
◊ Every 12 calendar years the instrumentation transformers and the control circuitry are verified.

Example #3: A combination of monitored and unmonitored components within a given Protection System might be:

◊ A microprocessor relay with alarm connected to SCADA to alert 24-hr staffed operations center. (monitored)
◊ Instrument transformers, with no monitoring, connected as inputs to that relay (unmonitored)
◊ Battery without any alarms connected to SCADA (unmonitored)
◊ Circuit breaker with a trip coil, with no circuits monitored (unmonitored)

Given the particular components, conditions, and using the Table 1 ("Maximum Allowable Testing Intervals and Maintenance Activities"), the particular components shall have maximum activity intervals of:

- ◊ Every 3 calendar months check battery bank voltage, check for unintentional grounds and check electrolyte level.
- ◊ Every 18 calendar months check battery bank ohmic values (if performance tests are not opted), battery float voltage and battery rack integrity.
- ◊ Every 6 calendar years battery performance test (if ohmic tests are not opted), battery charger alarms verified and trip test circuit breakers, electro-mechanical lock-out relays and auxiliary relays.
- ◊ Every 12 calendar years the microprocessor relay, the instrumentation transformers and the control circuitry are verified.

B. What is the intent behind the different levels of monitoring?

The intent behind different levels of monitoring is to allow less frequent manual intervention when more information is known about the condition of Protection System components. Condition-Based Maintenance is a valuable asset to improve reliability.

C. Do all monitoring levels apply to all components in a protection system?

No. For some components in a protection system, certain levels of monitoring will not be relevant. For example a battery will always need some kind of inspection.

D. My microprocessor relays and dc circuit alarms are contained on relay panels in a 24-hour attended control room. Does this qualify as an extended time interval condition-based system?

Yes, provided the station attendant (plant operator, etc.) monitors the alarms and other indications (comparable to the monitoring attributes) and reports them within the given time limits that are stated in the criteria of the Tables.

E. When documenting the basis for inclusion of components into the appropriate levels of monitoring as per Requirement R2 of the standard, is it necessary to provide this documentation about the device by listing of every component and the specific monitoring attributes of each device?

No. While maintaining this documentation on the device level would certainly be permissible, it is not necessary. Global statements can be made to document appropriate levels of monitoring for the entire population of a component type or portion thereof.
For example, it would be permissible to document the conclusion that all BES substation dc supply battery chargers are Monitored by stating the following within the program description:

> "All substation dc supply battery chargers are considered Monitored and subject to the rows for monitored equipment of Table 1-4 requirements as all substation dc supply battery chargers are equipped with dc voltage alarms and ground detection alarms that are sent to the manned control center."

Similarly, it would be acceptable to use a combination of a global statement and a device level list of exclusions. Example:

> "Except as noted below, all substation dc supply battery chargers are considered Monitored and subject to the rows for monitored equipment of Table 1-4 requirements as all substation dc supply battery chargers are equipped with dc voltage alarms and

ground detection alarms that are sent to the manned control center. The dc supply battery chargers of Substation X, Substation Y, and Substation Z are considered Unmonitored and subject to the rows for unmonitored equipment in Table 1-4 requirements as they are not equipped with ground detection capability."

Regardless whether this documentation is provided by device listing of monitoring attributes, by global statements of the monitoring attributes of an entire population of component types, or by some combination of these methods, it should be noted that auditors may request supporting drawings or other documentation necessary to validate the inclusion of the device(s) within the appropriate level of monitoring. This supporting background information need not be maintained within the program document structure but should be retrievable if requested by an auditor.

2. Unmonitored Protection Systems

A. We have an electromechanical (unmonitored) relay that has a trip output to a lockout relay (unmonitored) which trips our transformer off-line by tripping the transformer's high-side and low-side circuit breakers. What testing must be done for this system?

This system is made up of components that are all unmonitored. Assuming a time-based protection system maintenance program schedule (as opposed to a performance-based maintenance program), each component must be maintained per the most frequent hands-on activities listed in the Tables 1-1 through 1-5.

3. Monitored Protection Systems

A. We have a 30 year old oil circuit breaker with a red indicating lamp on the substation relay panel that is illuminated only if there is continuity through the breaker trip coil. There is no SCADA monitor or relay monitor of this trip coil. The line protection relay package that trips this circuit breaker is a microprocessor relay that has an integral alarm relay that will assert on a number of conditions that includes a loss of power to the relay. This alarm contact connects to our SCADA system and alerts our 24-hour operations center of relay trouble when the alarm contact closes. This microprocessor relay trips the circuit breaker only and does not monitor trip coil continuity or other things such as trip current. Is this an unmonitored or a partially-monitored system? How often must I perform maintenance?

The protective relay is monitored and can be maintained every 12 years or when a maintenance correctable issue arises. The control circuitry has no electro-mechanical parts and can be maintained every 12 years. The trip coil(s) has to be electrically operated at least once every 6 years.

B. How do I verify the A/D converters of microprocessor-based relays?

There are a variety of ways to do this. Two examples would be: using values gathered via data communications and automatically comparing these values with values from other sources, or using groupings of other measurements (such as vector summation of bus feeder currents) for comparison. Many other methods are possible.

C. How is the performance criteria of Protection System communications equipment involved in the maintenance program?

An entity determines the acceptable performance criteria depending on the technology implemented. If the communications channel performance of a Protection System varies from the pre-determined performance criteria for that system then these results should be investigated and resolved.

D. My system has alarms that are gathered once daily through an auto-polling system; this is not really a conventional SCADA system but does it meet the Table 1 requirements for inclusion as a monitored system?

Yes, provided the auto-polling that gathers the alarms reports those alarms to a location where the action can be initiated to correct the maintenance-correctable issue. This location does not have to be the location of the engineer or the technician that will eventually repair the problem, but rather a location where the action can be initiated.

4. Monitored Protection Systems that also monitor alarm path failures

A. Why are there activities defined for levels of monitoring a Protection System component when that level of technology may not yet be available?

There may already be some equipment available that is capable of meeting the highest levels of monitoring criteria listed in the Tables. However, even if there is no equipment available today that can meet this level of monitoring the Standard establishes the necessary requirements for when such equipment becomes available. By creating a roadmap for development, this provision makes the Standard technology-neutral. The standard drafting team wants to avoid the need to revise the Standard in a few years to accommodate technology advances that may be coming to the industry.

Appendix A — Protection System Maintenance Standard Drafting Team

Charles W. Rogers
Chairman
Consumers Energy Co.

John B. Anderson
Xcel Energy

Merle E. Ashton
Tri-State G&T

Bob Bentert
Florida Power & Light Company

John Ciufo
Hydro One Inc

Sam Francis
Oncor

Carol A Gerou
Midwest Reliability Organization

William Shultz
Southern Company Generation

Russell C Hardison
Tennessee Valley Authority

David Harper
NRG Texas Maintenance Services

Mark Lukas
ComEd

Al McMeekin
NERC Staff
North American Electric Reliability Corporation

Mark Peterson
Great River Energy

Leonard Swanson, Jr
National Grid USA

Eric A Udren
Quanta Technology

Philip B Winston
Southern Company Transmission

John A Zipp
ITC Holdings

Index

3-month interval, 25
aggregate, 26
alarm, 17, 18, 19, 31, 32, 34
automated monitoring and alarming, 25, 26
auto-restoration, 5
auxiliary relay, 11, 12
batteries, 12, 13, 14, 15, 28, 29
battery, 11, 12, 13, 14, 15, 16, 28, 29, 31
broken, 7
capacity, 14, 15
channel performance, 18, 19, 34
charger, 12, 13, 14
check-off, 16
closing circuits, 5
commission, 23, 24
communications, 7, 11, 16, 17, 18, 19, 34
communications channel, 17, 18
Communications Site Batteries, 16
communications-assisted-trip, 11
component, 2, 11, 15, 20, 23, 24, 26, 27, 28, 31, 33
continuity, 13, 14, 33
corrective, 2, 6, 27, 28
countable events, 2, 26, 27
current and voltage measurements, 9
data retention, 23
DC ground, 16
documentation, 6, 22, 23, 24, 33
documentation method, 16
electromechanical, 7, 10, 27, 33
electro-mechanical relays, 6
evidence, 6, 22, 23
fiber optic I/O scheme, 18
firmware, 5, 27
frequency-shift, 17
guard, 17, 18
lockout relay, 11, 21, 33
maintenance correctable issue, 2, 34
maintenance plan, 6, 23, 25
maximum allowable interval, 25, 27
microprocessor, 5, 6, 7, 9, 10, 11, 13, 14, 27, 31, 32, 34
Misoperations, 2, 27
nickel-cadmium, 14, 15
ohmic, 14, 15
out-of-service, 7
partially monitored, 17
PBM, 26, 28, 29
performance-based maintenance, 26, 27, 28
pilot wire, 17
PMU, 20
power-line carrier, 17
pressure relays, 12
protective relays, 5, 6, 7, 9, 10, 12, 13, 17, 18, 21
reclosing relays, 5
Restoration, 6
sample list of devices, 21
segment, 2, 26, 27, 29
settings, 2, 6, 7, 12, 23
SPS, 5, 19, 20
Table 1a, 3, 33
Table 1b, 11, 18, 33
Table 1c, 22, 34
TBM, 23
trip coil, 11, 31, 32, 33
trip signal, 11, 18
trip test, 11
tripping circuits, 11
UFLS, 19, 20
unintentional ground, 16
unmonitored, 17, 30, 31, 32, 33, 34
UVLS, 19, 20
valve-regulated lead-acid, 15
vented lead-acid, 15, 31
voltage and current sensing devices, 2, 9, 10
VRLA, 14, 15

NERC Protection System Maintenance Standard PRC-005-2

FREQUENTLY ASKED QUESTIONS - Practical Compliance and Implementation

~~April 16~~November 17, 2010

Informative Annex to Standard PRC-005-2

Prepared by the

Protection System Maintenance and Testing Standard Drafting Team

Table of Contents

Introduction **2**

Executive Summary **2**

Terms Used in PRC-005-2 ..... **2**

Frequently Asked Questions **3**

I General FAQs: *3*

II Group by Type of Protection System Component: *5*

1. All Protection System Components *5*

2. Protective Relays *5*

3. Voltage and Current Sensing Device Inputs to Protective Relays *9*

4. Protection System Control Circuitry *11*

5. Station dc Supply *12*

6. Protection System Communications Equipment *17*

7. UVLS and UFLS Relays that Comprise a Protection System Distributed Over the Power System *19*

8. SPS or Relay Sensing for Centralized UFLS or UVLS *20*

III Group by Type of BES Facility: *21*

1. All BES Facilities *21*

2. Generation *21*

3. Transmission *22*

IV Group by Type of Maintenance Program: *23*

1. All Protection System Maintenance Programs *23*

2. Time-Based Protection System Maintenance (TBM) Programs *24*

3. Performance-Based Protection System Maintenance (PBM) Programs *27*

V Group by Monitoring Level: *32*

1. All Monitoring Levels *32*

2. ~~Level 1 Monitored Protection Systems (~~Unmonitored Protection Systems~~)~~ *36*

3. ~~Level 2~~ Monitored Protection Systems ~~(Partially Monitored Protection Systems)~~ *42*

4. ~~Level 3~~ Monitored Protection Systems ~~(Fully Monitored Protection Systems)~~that also monitor alarm path failures *43*

Appendix A — Protection System Maintenance Standard Drafting Team **44**

Index **45**

Introduction

The following is a draft collection of questions and answers that the PSMT SDT believes could be helpful to those implementing NERC Standard PRC-005-2 Protection System Maintenance. As the draft standard proceeds through development, this FAQ document will be revised, including responses to key or frequent comments from the posting process. The FAQ will be organized at a later time during the development of the draft Standard.

This FAQ document will support both the Standard and the associated Technical Reference document.

Executive Summary

- Write later if needed

Terms Used in PRC-005-2

~~**Maintenance Correctable Issue** – As indicated in footnote 2 of the draft standard, a maintenance correctable issue is a failure of a device to operate within design parameters that can not be restored to functional order by repair or calibration while performing the initial on-site maintenance activity, and that requires follow-up corrective action.~~

~~**Segment** – As indicated in *PRC-005-2 Attachment A Criteria for a Performance-Based Protection System Maintenance Program*, a segment is a "A grouping of Protection Systems or components of a particular model or type from a single manufacturer, with other common factors such that consistent performance is expected across the entire population of the segment, and shall only be defined for a population of 60 or more individual components."~~

~~**Component** – This equipment is first mentioned in Requirement 1.1 of this standard. A component is any individual discrete piece of equipment included in a Protection System, such as a protective relay or current sensing device. Types of components are listed in Table 1 ("Maximum Allowable Testing Intervals and Maintenance Activities for Unmonitored Protection Systems"). For components such as dc circuits, the designation of what constitutes a dc control circuit component is somewhat arbitrary and is very dependent upon how an entity performs and tracks the testing of the dc circuitry. Some entities test their dc circuits on a breaker basis whereas others test their circuitry on a local zone of protection basis. Thus, entities are allowed the latitude to designate their own definitions of "dc control circuit components." Another example of where the entity has some discretion on determining what constitutes a single component is the voltage and current sensing devices, where the entity may choose either to designate a full three-phase set of such devices or a single device as a single component.~~

~~**Countable Event** – As indicated in footnote 4 of *PRC-005-2 Attachment A, Criteria for a Performance-based Protection System Maintenance Program*, countable events include any failure of a component requiring repair or replacement, any condition discovered during the verification activities in Table 1a through Table 1c which requires corrective action, or a Misoperation attributed to hardware failure or calibration failure. Misoperations due to product design errors, software errors, relay settings different from specified settings, Protection System component configuration errors, or Protection System application errors are *not* included in Countable Events.~~

Frequently Asked Questions

I General FAQs:

1. The standard seems very complicated, and is difficult to understand. Can it be simplified?

Because the standard is establishing parameters for condition-based Maintenance (R2) and performance-based Maintenance (R3) in addition to simple time-based Maintenance, it does appear to be complicated. At its simplest, an entity needs to ~~follow R1 and R4~~ and perform ONLY time-based maintenance according to ~~Table 1a, eliminating R2 and R3 from consideration altogether.~~the unmonitored rows of the Tables. If an entity then wishes to take advantage of monitoring on its Protection System components~~, R2 comes into play, along with Tables 1b and 1c~~ and its available lengthened time intervals then it may, as long as the component has the listed monitoring attributes. If an entity wishes to use historical performance of its Protection System components to perform performance-based Maintenance, then R3 applies.

Please see the following diagram, which provides a "flow chart" of the standard.

Requirements Flowchart

PRC-005-2

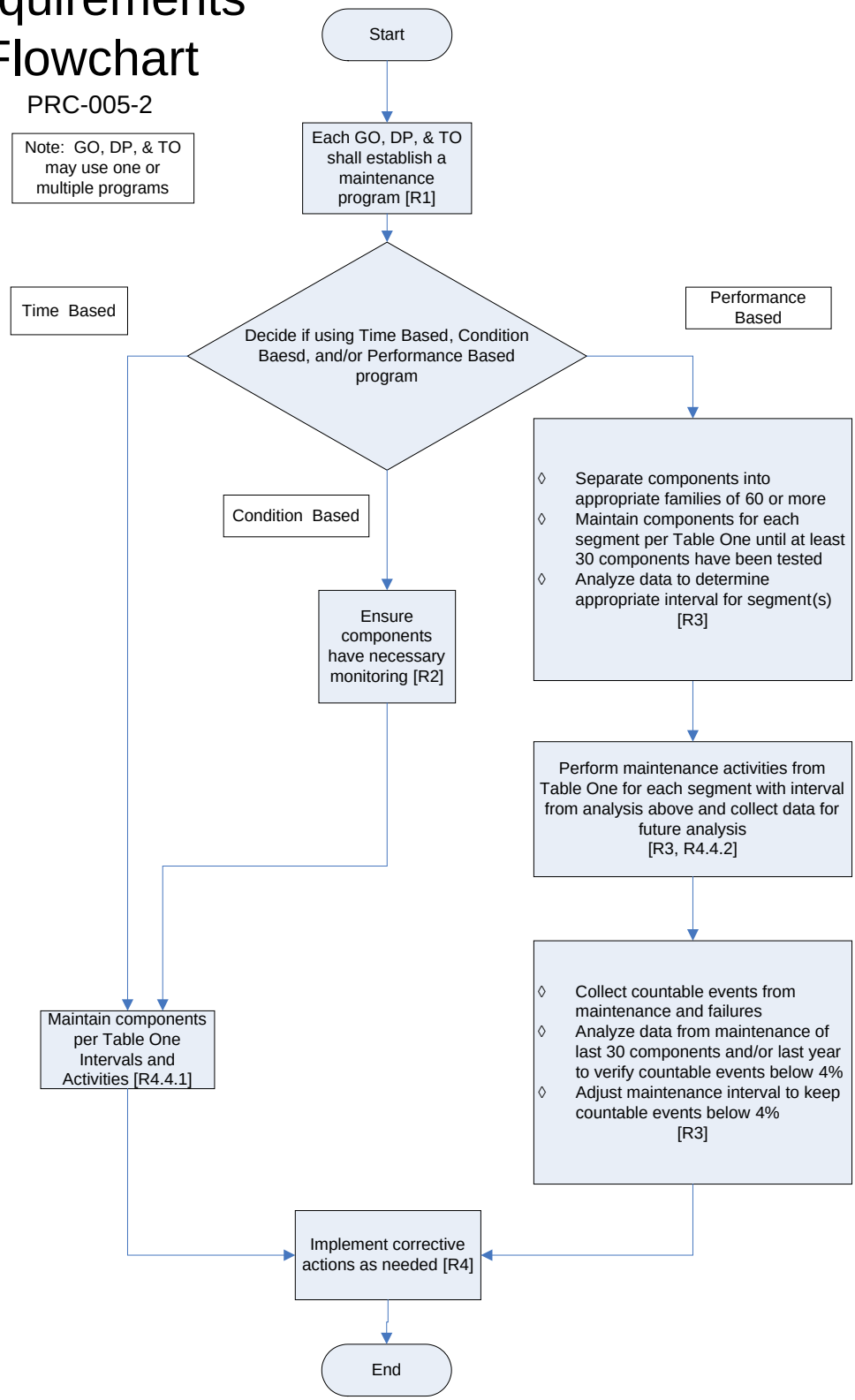

II Group by Type of Protection System Component:

1. All Protection System Components

A. Are power circuit reclosers, reclosing relays, closing circuits and auto-restoration schemes covered in this standard?

No. As stated in Requirement R1, this standard covers protective relays that use measurements of voltage, current and/or phase angle to determine anomalies and to trip a portion of the BES. Reclosers, reclosing relays, closing circuits and auto-restoration schemes are used to cause devices to close as opposed to electrical-measurement relays and their associated circuits that cause circuit interruption from the BES; such closing devices and schemes are more appropriately covered under other NERC Standards. There is one notable exception: if a Special Protection System incorporates automatic closing of breakers, the related closing devices are part of the SPS and must be tested accordingly.

B. Why does PRC-005-2 not specifically require maintenance and testing procedures as reflected in the previous standard, PRC-005-1?

PRC-005-1 does not require detailed maintenance and testing procedures, but instead requires summaries of such procedures, and is not clear on what is actually required. PRC-005-2 requires a documented ~~Maintenance~~maintenance program, and is focused on establishing ~~Requirements~~requirements rather than prescribing methodology to meet those ~~Requirements~~requirements. Between the activities identified in the tables 1-1 through 1-5 and Table 2 (collectively the "Tables~~ 1a, 1b, and 1c,~~"), and the various components of the definition established for a "Protection System Maintenance Program", PRC-005-2 establishes the activities and time-basis for a Protection System Maintenance Program to a level of detail not previously required.

2. Protective Relays

A. How do I approach testing when I have to upgrade firmware of a microprocessor relay?

~~The component "Upkeep" in the definition of a Protection System Maintenance Program, addresses "Routine activities necessary to assure that the component remains in good working order and implementation of any manufacturer's hardware and software service advisories which are relevant to the application of the device." The Maintenance Activities specified in Table 1a, Table 1b, and Table 1c do not present any requirements related to Upkeep for Protective Relays. However, the entity should assure that the relay continues to function properly after implementation of firmware changes.~~

The entity should ensure that the relay continues to function properly after implementation of firmware changes. Some entities may have a R&D department that might routinely run acceptance tests on devices with firmware upgrades before allowing the upgrade to be installed. Other entities may rely upon the vigorous testing of the firmware OEM. An entity has the latitude to install devices and/or programming that they believe will perform to their

satisfaction. If an entity should choose to perform the maintenance activities specified in the Tables following a firmware upgrade then they may, if they choose, reset the time clock on that set of maintenance activities so that they would not have to repeat the maintenance on its regularly scheduled cycle. (However, for simplicity in maintenance schedules, some entities may choose to not reset this time clock; it is merely a suggested option.)

B. Please clarify what is meant by restoration in the definition of maintenance.

The ~~component~~description of "Restoration" in the definition of a Protection System Maintenance Program, addresses corrective activities necessary to assure that the component is returned to working order following the discovery of its failure or malfunction. The Maintenance Activities specified in ~~Table 1a, Table 1b, and Table 1c~~the Tables do not present any requirements related to Restoration; R4.3 of the standard does require that the entity "initiate any necessary activities to correct unresolved maintenance correctable issues". Some examples of restoration (or correction of maintenance-correctable issues) include, but are not limited to, replacement of capacitors in distance relays to bring them to working order; replacement of relays, or other Protection System components, to bring the Protection System to working order; upgrade of electro-mechanical or solid-state protective relays to micro-processor based relays following the discovery of failed components. Restoration, as used in this context is not to be confused with Restoration rules as used in system operations. Maintenance activity necessarily includes both the detection of problems and the repairs needed to eliminate those problems. This standard does not identify all of the Protection System problems that must be detected and eliminated, rather it is the intent of this standard that an entity determines the necessary working order for their various devices and keeps them in working order. If an equipment item is repaired or replaced then the entity can restart the maintenance-time-interval-clock if desired, however the replacement of equipment does not remove any documentation requirements that would have been required to verify compliance with time-interval requirements; in other words do not discard maintenance data that goes to verify your work

C. If I upgrade my old relays then do I have to maintain my previous equipment maintenance documentation?

If an equipment item is repaired or replaced then the entity can restart the maintenance-activity-time-interval-clock if desired, however the replacement of equipment does not remove any documentation requirements. The requirements in the standard are intended to ensure that an entity has a maintenance plan and that the entity adheres to minimum activities and maximum time intervals. The documentation requirements are intended to help an entity demonstrate compliance. For example, saving the dates and records of the last two maintenance ~~cycles~~activities is intended to demonstrate compliance with the interval. Therefore, if you upgrade or replace equipment then you still must maintain the documentation for the previous equipment, thus demonstrating compliance with the time interval requirement prior to the replacement action.

D. What is meant by "Verify that settings are as specified" maintenance activity in ~~tables 1a and 1b~~Table 1-1?

Verification of settings is an activity directed mostly towards microprocessor based relays.

For relay maintenance departments that choose to test microprocessor based relays in the same manner as electro-mechanical relays are tested, the testing process sometimes requires that some specific functions be disabled. Later tests might enable the functions previously disabled but perhaps still other functions or logic statements were then masked out. It is imperative that,

when the relay is placed into service, the settings in the relay be the settings that were intended to be in that relay or as the Standard states "…settings are as specified."

Many of the microprocessor based relays available today have software tools which provide this functionality and generate reports for this purpose.

For evidence or documentation of this requirement a simple recorded acknowledgement that ~~this was done~~the settings were checked to be as specified is sufficient.

The drafting team was careful not to require "…that the relay settings be correct…" because it was believed that this might then place a burden of proof that the specified settings would result in the correct intended operation of the interrupting device. While that is a noble intention, the measurable proof of such a requirement is immense. The intent is simply to check that the settings in the relay match the settings specified to those placed into the relay.

E. Are electromechanical relays included in the "Verify that settings are as specified" maintenance activity in ~~tables 1a and 1b~~Table 1-1?

Verification of settings is an activity directed towards the application of protection related functions of microprocessor based relays. Electromechanical relays require calibration verification by voltage and/or current injection, and thus the settings are verified during calibration activity. In the example of a time-overcurrent relay, a minor deviation in time dial, versus the settings, may be acceptable as long as the relay calibration is within accepted tolerances at the injected current amplitudes. A major deviation may require further investigation, as it could indicate a problem with the relay or an incorrect relay style for the application.

F. I use my protective relays only as sources of metered quantities and breaker status for SCADA and EMS through a substation distributed RTU or data concentrator to the control center. What are the maintenance requirements for the relays?

This standard addresses only devices "that are applied on, or are designed to provide protection for the BES." Protective relays, providing only the functions mentioned in the question, are not included.

G. I use my protective relays for fault and disturbance recording, collecting oscillographic records and event records via communications for fault analysis to meet NERC and DME requirements. What are the maintenance requirements for the relays?

For relays used only as disturbance monitoring equipment, the NERC standard PRC-018-1 R3 & R6 states the maintenance requirements, and is being addressed by a Standards activity that is revising PRC-002-1 and PRC-018-1. For protective relays "that are applied on, or are designed to provide protection for the BES," this standard applies, even if they also perform DME functions.

H. We have a number of installations where we have changed our Protection System components. Some of the changes were upgrades, but others were simply system rating changes that merely required taking relays "out-of-service". What are our responsibilities when it comes to "out-of-service" devices?

Assuming that your system ~~uprates~~up-rates, upgrades and overall changes meet any and all other requirements and standards then the requirements of PRC-005-2 are simple – if the Protection system component performs a Protection system function then it must be maintained. If the component no longer performs Protection System functions than it does not

require maintenance activities under the Tables of PRC-005-2. While many entities might physically remove a component that is no longer needed there is no requirement in PRC-005-2 to remove such component(s). Obviously, prudence would dictate that an "out-of-service" device is truly made inactive. There are no record requirements listed in PRC-005-2 for Protection System components not used.

I. While performing relay testing of a protective device on our Bulk Electric System it was discovered that the protective device being tested was either broken or out of calibration. Does this satisfy the relay testing requirement even though the protective device tested bad, and may be unable to be placed back into service?

Yes, PRC-005-2 requires entities to perform relay testing on protective devices on a given maintenance cycle interval. By performing this testing, the entity has satisfied PRC-005-2 requirement although the protective device may be unable to be returned to service under normal calibration adjustments. R4.3 states (the entity must):
The entity must assure either that the components are within acceptable parameters at the conclusion of the maintenance activities or initiate any necessary activities to correct unresolved maintenance correctable issues.

J. If I show the protective device out of service while it is being repaired then can I add it back as a new protective device when it returns? If not, my relay testing history would show that I was out of compliance for the last maintenance cycle.

The maintenance and testing requirements (R4.3) (in essence) state that the entity assure the components are within the owner's acceptable operating parameters, if not then actions must be initiated to correct the deviance. The type of corrective activity is not stated; however it could include repairs or replacements. Documentation is always a necessity ("*If it is not documented then it wasn't done!*")
Your documentation requirements will increase, of course, to demonstrate that your device tested bad and had corrective actions initiated. Your regional entity could very well ask for documentation showing status of your corrective actions.

K. What calibration tolerance should be applied on electromechanical relays?

Each entity establishes their own acceptable tolerances when applying protective relaying on their system. For some Protection System components, adjustment is required to bring measurement accuracy within the parameters established by the asset owner based on the specific application of the component. A calibration failure is the result if testing finds the specified parameters to be out of tolerance.

L. What is meant by "verify operation of the relay inputs and outputs that are essential to proper functioning of the Protection System?"

Any input or output that "affects the tripping" of the breaker is included in the scope of I/O to be verified. By "affects the tripping" one needs to realize that sometimes there are more Inputs and Outputs than simply the output to the trip coil. Many important protective functions include things like Breaker Fail Initiation, Zone Timer Initiation and sometimes even 52a/b contact inputs are needed for a protective relay to correctly operate.

Each input should be "picked up" or "turned on and off" and verified as changing state by the microprocessor of the relay. Each output should be "operated" or "closed and opened" from

the microprocessor of the relay and the output should be verified to change state on the output terminals of the relay.

Each input detector on a component that is needed for a protective function and each output action from a component that is needed for a protective function needs to be tested.

In short, if an entity designed a scheme into the protective functions then that scheme needs to be tested.

3. Voltage and Current Sensing Device Inputs to Protective Relays

A. What is meant by "…verify the current and voltage circuit inputs from the voltage and current sensing devices to the protective relays …" Do we need to perform ratio, polarity and saturation tests every few years?

No. You must verify that the protective relay is receiving the expected values from the voltage and current sensing devices (typically voltage and current transformers). This can be as difficult as is proposed by the question (with additional testing on the cabling and substation wiring to ensure that the values arrive at the relays); or simplicity can be achieved by other verification methods. While some examples follow, these are not intended to represent an all-inclusive list; technology advances and ingenuity should not be excluded from making comparisons and verifications:

- Compare the secondary values, at the relay, to a metering circuit, fed by different current transformers, monitoring the same line as the questioned relay circuit.
- Compare the individual phase secondary values at the relay panel (with additional testing on the panel wiring to ensure that the values arrive at those relays) with the other phases, and verify that residual currents are within expected bounds
- Observe all three phase currents and the residual current at the relay panel with an oscilloscope, observing comparable magnitudes and proper phase relationship, with additional testing on the panel wiring to ensure that the values arrive at the relays.
- Compare the values, as determined by the questioned relay (such as, but not limited to, a query to the microprocessor relay), to another protective relay monitoring the same line, with currents supplied by different CT's.
- Compare the secondary values, at the relay with values measured by test instruments (such as, but not limited to multi-meters, voltmeter, clamp-on ammeters, etc) and verified by calculations and known ratios to be the values expected. For example a single PT on a 100KV bus will have a specific secondary value that when multiplied by the PT ratio arrives at the expected bus value of 100KV.
- Query SCADA for the power flows at the far end of the line protected by the questioned relay, compare those SCADA values to the values as determined by the questioned relay.
- Totalize the Watts and VARs on the bus and compare the totals to the values as seen by the questioned relay.

The point of the verification procedure is to ensure that all of the individual components are functioning properly; and that, an ongoing proactive procedure is in place to re-check the various components of the protective relay measuring systems.

B. The verification of phase current and voltage measurements by comparison to other quantities seems reasonable. How, though, can I verify residual or neutral currents, or 3V0 voltages, by comparison, when my system is closely balanced?

Since these inputs are verified at commissioning, maintenance verification requires ensuring that phase quantities are as expected and that 3IO and 3VO quantities appear equal to or close to 0.

These quantities also may be ~~also~~ verified by use of oscillographic records for connected microprocessor relays as recorded during system disturbances. Such records may compare to similar values recorded at other locations by other microprocessor relays for the same event, or compared to expected values (from short circuit studies) for known fault locations.

C. Is wiring insulation or hi-pot testing required by this Maintenance Standard?

No, wiring insulation and equipment hi-pot testing are not specifically required by the Maintenance Standard. However, if the method of verifying CT and PT inputs to the relay involves some other method than actual observation of current and voltage transformer secondary inputs to the relay, it might be necessary to perform some sort of cable integrity test to verify that the instrument transformer secondary signals are actually making it to the relay and not being shunted off to ground. For instance, you could use CT excitation tests and PT turns ratio tests and compare to baseline values to verify that the instrument transformer outputs are acceptable. However, to conclude that these acceptable transformer instrument output signals are actually making it to the relay inputs, it also would be necessary to verify the insulation of the wiring between the instrument transformer and the relay.

D. My plant generator and transformer relays are electromechanical and do not have metering functions as do microprocessor based relays. In order for me to compare the instrument transformer inputs to these relays to the secondary values of other metered instrument transformers monitoring the same primary voltage and current signals, it would be necessary to temporarily connect test equipment like voltmeters and clamp on ammeters to measure the input signals to the relays. This practice seems very risky and a plant trip could result if the technician were to make an error while measuring these current and voltage signals. How can I avoid this risk? Also, what if no other instrument transformers are available which monitor the same primary voltage or current signal?

Comparing the input signals to the relays to the outputs of other independent instrument transformers monitoring the same primary current or voltage is just one method of verifying the instrument transformer inputs to the relays but is not required by the standard. Plants can choose how to best manage their risk. If online testing is deemed too risky, offline tests such as, but not limited to, CT excitation test and PT turns ratio tests can be compared to baseline data and be used in conjunction with CT and PT secondary wiring insulation verification tests to adequately "verify the current and voltage circuit inputs from the voltage and current sensing devices to the protective relays …" while eliminating the risk of tripping an in service generator or transformer. Similarly, this same offline test methodology can be used to verify

the relay input voltage and current signals to relays when there are no other instrument transformers monitoring available for purposes of signal comparison.

4. Protection System Control Circuitry

A. Is it permissible to verify circuit breaker tripping at a different time (and interval) than when we verify the protective relays and the instrument transformers?

Yes, provided the entire Protective System is tested within the individual components' maximum allowable testing intervals.

B. The Protection System Maintenance Standard describes requirements for verifying the tripping of circuit breakers. What is this telling me about maintenance of circuit breakers?

Requirements in PRC-005-2 are intended to verify the integrity of tripping circuits, including the breaker trip coil, as well as the presence of auxiliary supply (usually a ~~dc~~ battery) for energizing the trip coil if a protection function operates. Beyond this, PRC-005-2 sets no requirements for verifying circuit breaker performance, or for maintenance of the circuit breaker.

C. How do I test each dc Control Circuit path, as established ~~for level 2 (partially monitored protection systems) monitoring of a~~in Table 1-5 "Protection System Control Circuitry (Trip coils and auxiliary relays)"?

Table ~~1b~~1-5 specifies that each breaker trip coil, auxiliary relay, and lockout relay must be operated within the specified time period. The required operations may be via targeted maintenance activities, or by documented operation of these devices for other purposes such as fault clearing.

D. What does this standard require for testing an Auxiliary Tripping Relay?

Table 1 requires that the trip test must verify that the auxiliary tripping relay(s) and/or lockout relay(s) operate(s) electrically and that their trip output(s) perform as expected. Auxiliary outputs not in a trip path (i.e. ~~alarming~~annunciation or DME input) are not required, by this standard, to be checked.

E. What does a functional (or operational) trip test include?

An operational trip test must be performed on ~~each portion of~~ a trip ~~circuit~~device. Each control circuit path that produces a trip signal must be verified; this includes trip coils, auxiliary tripping relays, lockout relays, and communications-assisted-trip schemes.

A trip test may be an overall test that verifies the operation of the entire trip scheme at once, or it may be several tests of the various portions that make up the entire trip path, provided that testing of the various portions of the trip scheme verifies all of the portions, including parallel paths, and overlaps those portions.

A circuit breaker or other interrupting device needs to be trip tested at least once per trip coil~~.~~.

Discrete-component auxiliary relays and lock-out relays must be verified by trip test. The trip test must verify that the auxiliary or lock-out relay operates electrically and that the relay's trip output(s) change(s) state. Software latches or control algorithms, including trip logic processing implemented as programming component such as a microprocessor relay that take the place of (conventional) discrete component auxiliary relays or lock-out relays do not have to be routinely trip tested.

Normally-closed auxiliary contacts from other devices (for example, switchyard-voltage-level disconnect switches, interlock switches, or pressure switches) which are in the breaker trip path do not need to be tested.

F. Is a Sudden Pressure Relay an Auxiliary Tripping Relay?

No. IEEE C37.2-2008 assigns the device number 94 to auxiliary tripping relays. Sudden pressure relays are assigned device number 63, and is excluded from the Standard ~~by footnote 1~~because it does not utilize voltage and/or current measurements to determine anomalies. Devices that use anything other than electrical detection means are excluded.

G. The standard specifically mentions Auxiliary and Lock-out relays; what is an Auxiliary Tripping Relay?

An auxiliary relay, IEEE Device Number 94, is described in IEEE Standard C37.2-2008 as "A device that functions to trip a circuit breaker, contactor, or equipment; to permit immediate tripping by other devices; or to prevent immediate reclosing of a circuit interrupter if it should open automatically, even though its closing circuit is maintained closed."

H. What is a Lock-out Relay?

A lock-out relay, IEEE Device Number 86, is described in IEEE Standard C37.2 as "A device that trips and maintains the associated equipment or devices inoperative until it is reset by an operator, either locally or remotely."

I. My mechanical device does not operate electrically and does not have calibration settings; what maintenance activities apply?

You must conduct a test(s) to verify the integrity of the trip circuit. This standard does not cover circuit breaker maintenance or transformer maintenance. The standard also does not cover testing of devices such as sudden pressure relays (63), temperature relays (49), and other relays which respond to mechanical parameters rather than electrical parameters.

5. Station dc Supply

A. What constitutes the station dc supply as mentioned in the definition of Protective System?

The station direct current (dc) supply normally consists of two components: the battery charger and the station battery itself. There are also emerging technologies that provide a source of dc supply that does not include either a battery or charger.

Battery Charger - The battery charger is supplied by an available ac source. At a minimum, the battery charger must be sized to charge the battery (after discharge) and supply the constant dc load. In many cases, it may be sized also to provide sufficient dc current to handle the higher energy requirements of tripping breakers and switches when actuated by the protective relays in the Protection System.

Station Battery - Station batteries provide the dc power required for tripping and for supplying normal dc power to the station in the event of loss of the battery charger. There are several technologies of battery that require unique forms of maintenance as established in Table 1.

Emerging Technologies - Station dc supplies are currently being developed that use other energy storage technologies beside the station battery to prevent loss of the station dc supply when ac power is lost. Maintenance of these station dc supplies will require different kinds of tests and inspections. Table 1 presents maintenance activities and maximum allowable testing intervals for these new station dc supply technologies. However, because these technologies are relatively new the maintenance activities for these station dc supplies may change over time.

B. In the Maintenance Activities for station dc supply in Table 1, what do you mean by "continuity"?

Because the Standard pertains to maintenance not only of the station battery, but also the whole station dc supply, continuity checks of the station dc supply are required. "Continuity" as used in Table 1 refers to verifying that there is a continuous current path from the positive terminal of the station battery set to the negative terminal, otherwise there is no way of determining that a station battery is available to supply dc current to the station.

The current path through a station battery from its positive to its negative connection to the dc control circuits is composed of two types of elements. These path elements are the electrochemical path through each of its cells and all of the internal and external metallic connections and terminations of the batteries in the battery set. If there is loss of continuity (an open circuit) in any part of the electrochemical or metallic path the battery set will not be available for service.

C. Why is it necessary to verify the continuity of the dc supply?

In the event of the loss of the ac source or battery charger, the battery must be capable of supplying dc current, both for continuous dc loads and for tripping breakers and switches. Without continuity, the battery cannot perform this function.

If the battery charger is not sized to handle the maximum dc current required to operate the protective systems, it is sized only to handle the constant dc load of the station and the charging current required to bring the battery back to full charge following a discharge. At those stations, the battery charger would not be able to trip breakers and switches if the battery experiences loss of continuity.

At generating stations and large transmission stations where battery chargers are capable of handling the maximum current required by the Protection System, there are still problems that could potentially occur when the continuity through the connected battery is interrupted.

◊ Many battery chargers produce harmonics which can cause failure of dc power supplies in microprocessor based protective relays and other electronic devices connected to station

dc supply. In these cases, the substation battery serves as a filter for these harmonics. With the loss of continuity in the battery, the filter provided by the battery is no longer present.

- ◊ Loss of electrical continuity of the station battery will cause, regardless of the battery charger's output current capability, a delayed response in full output current from the charger. Almost all chargers have an intentional 1 to 2 second delay to switch from a low substation dc load current to the maximum output of the charger. This delay would cause the opening of circuit breakers to be delayed which could violate system performance standards.

D. How do you verify continuity of the dc supply?

Monitoring of the station dc supply voltage will not indicate that there is a problem with the dc current path through the battery unless the battery charger is taken out of service. At that time a break in the continuity of the station battery current path will be revealed because there will be no voltage on the ~~substation~~station dc circuitry.

Although the Standard prescribes what must be done during the maintenance activity it does not prescribe how the maintenance activity should be accomplished. There are several methods that can be used to verify the electrical continuity of the battery. These are not the only possible methods, simply a sampling of some methods:

- ◊ One method is to measure that there is current flowing through the battery itself by a simple clamp on milliamp-range ammeter. A battery is always either charging or discharging. Even when a battery is charged there is still a measurable float charge current that can be detected to verify that there is continuity in the electrical path through the battery.
- ◊ A simple test for continuity is to remove the battery charger from service and verify that the battery provides voltage and current to the dc system. However, the behavior of the various dc-supplied equipment in the station should be considered before using this approach.
- ◊ Manufacturers of microprocessor ~~based~~controlled battery chargers have developed methods for their equipment to periodically (or continuously) test for battery continuity. For example, one manufacturer periodically reduces the float voltage on the battery until current from the battery to the dc load can be measured to confirm continuity.
- ◊ Applying test current (as in an ohmic testing device) will provide a current that when measured elsewhere in the string, will prove that the circuit is continuous.

No matter how the electrical continuity of a battery set is verified it is a necessary maintenance activity that must be performed at the intervals prescribed by Table 1 to insure that the station dc supply ~~will~~has a path that can provide the required current to the Protection System at all times.

E. When should I check the station batteries to see if they have sufficient energy to perform as designed?

The answer to this question depends on the type of battery (valve regulated lead-acid, vented lead acid, or nickel-cadmium), the maintenance activity chosen, and the type of time based monitoring level selected.

For example, if you have a Valve Regulated Lead-Acid (VRLA) station battery, and you have chosen to evaluate the measured cell/unit internal ohmic values to the battery cell's baseline, you will have to perform verification at a maximum maintenance interval of no greater than every three months. While this interval might seem to be quite short, keep in mind that the 3 month interval is consistent with IEEE guidelines for VRLA batteries; this interval provides an accumulation of data that better shows when a VRLA battery is no longer capable of its design capacity.

If, for a VRLA station battery, you choose to conduct a performance capacity test on the entire station battery as the maintenance activity, then you will have to perform verification at a maximum maintenance interval of no greater than every 3 calendar years.

F. Why in Table 1 are there two Maintenance Activities with different Maximum Maintenance Intervals listed to verify that the station battery can perform as designed?

The two acceptable methods for proving that a station battery can perform as designed are based on two different philosophies. The first activity requires a capacity discharge test of the entire battery set to verify that degradation of one or several components (cells) in the set has not deteriorated to a point where the total capacity of the battery system falls below its designed rating. The second maintenance activity requires tests and evaluation of the internal ohmic measurements on each of the individual cells/units of the battery set to determine that each component can perform as designed and therefore the entire battery set can be verified to perform as designed.

The maximum maintenance interval for discharge capacity testing is longer than the interval for testing and evaluation of internal ohmic cell measurements. An individual component of a battery set may degrade to an unacceptable level without causing the total battery set to fall below its designed rating under capacity testing. However, since the philosophy behind internal ohmic measurement evaluation is based on the fact that each battery component must be verified to be able to perform as designed, the interval for verification by this maintenance activity must be shorter to catch individual cell/unit degradation. It should be noted that even if a battery unit is composed of multiple cells the ohmic test can still be accomplished. The data produced becomes trending data on the multi-cell unit instead of trending individual cells.

G. What is the justification for having two different Maintenance Activities listed in Table 1 to verify that the station battery can perform as designed?

IEEE Standards 450, 1188, and 1106 for vented lead-acid, valve-regulated lead-acid (VRLA), and nickel-cadmium batteries, respectively (which together are the most commonly used substation batteries on the BES) go into great detail about capacity testing of the entire battery set to determine that a battery can perform as designed.

The first maintenance activity listed in Table 1 for verifying that a station battery can perform as designed uses maximum maintenance intervals for capacity testing that were designed to align with the IEEE battery standards. This maintenance activity is applicable for vented lead-acid, valve-regulated lead-acid, and nickel-cadmium batteries.

The second maintenance activity listed in Table 1 for verifying that a station battery can perform as designed uses maximum maintenance intervals for evaluating internal ohmic measurements in relation to their baseline measurements that are based on industry experience,

EPRI technical reports and application guides, and the IEEE battery standards. By evaluating the internal ohmic measurements for each cell and comparing that measurement to the cell's baseline ohmic measurement (taken at the time of the battery set's acceptance capacity test), low-capacity cells can be identified and eliminated to keep the battery set capable of performing as designed. This maintenance activity is applicable only for vented lead-acid and VRLA batteries~~.~~; this trending activity has not shown to be effective for NiCd batteries thus the only choices for NiCd batteries are the performance tests (see applicable IEEE guideline for specifics on performance tests). It should be noted that even if a battery unit is composed of multiple cells the ohmic test can still be accomplished. The data produced becomes trending data on the multi-cell unit instead of trending individual cells.

H. Why in Table 1 of PRC-005-2 is there a maintenance activity to inspect the structural intergrity of the battery rack?

The three IEEE standards (1188, 450, and 1106) for VRLA, vented lead-acid, and nickel-cadmium batteries all recommend that as part of any battery inspection the battery rack should be inspected. The purpose of this inspection is to verify that the battery rack is correctly installed and has no deterioration that could weaken its structural integrity. Because the battery rack is specifically designed for the battery that is mounted on it, weakening of its structural members by rust or corrosion can physically jeopardize the battery.

I. What is required to comply with the "Unintentional Grounds" requirement?

In most cases, the first ground that appears on a battery ~~pole~~ is not a problem. It is the unintentional ground that appears on the opposite pole that becomes problematic. Even then many systems are designed to operate favorably under some unintentional DC ground situations. It is up to the owner of the Protection System to determine if corrective actions are needed on detected unintentional DC grounds. The standard merely requires that a check be made for the existence of Unintentional DC Grounds. Obviously a "check-off" of some sort will have to be devised by the inspecting entity to ~~demonstrate~~document that a check is routinely done for Unintentional DC Grounds.

J. Where the standard refers to "all cells" is it sufficient to have a documentation method that refers to "all cells" or do we need to have separate documentation for every cell? For example to I need 60 individual documented check-offs for good electrolyte level or would a single check-off per bank be sufficient~~???~~?

A single check-off per battery bank is sufficient~~.~~ for documentation, as long as the single check-off attests to checking all cells/units.

K. Does this standard refer to Station batteries or all batteries, for example ~~Communication~~Communications Site Batteries?

This standard refers to Station Batteries. The drafting team does not believe that the scope of this standard refers to ~~communication~~communications sites. The batteries covered under PRC-005-2 are the batteries that supply the trip current to the trip coils of the interrupting devices that are a part of the Protection System. The SDT believes that a loss of power to the communications systems at a remote site would cause the communications systems associated with protective relays to alarm at the substation. At this point the corrective actions can be initiated.

L. My VRLA batteries have multiple-cells within an individual battery jar (or unit); how am I expected to comply with the cell-to-cell ohmic measurement requirements on these units that I cannot get to?

The values that are measured at all available terminals will produce results that can be tracked. Thus the trended results become the results of a unit instead of an individual cell. Bad units (regardless of the number of cells per unit) will result in the eventual repair or replacement of multiple cells even if only a single cell actually went bad. Cell-to-cell tests can equate to unit-to-unit tests or jar-to-jar tests. If there is such a thing as a single unit that contains the entire battery for the facility but only brings out the positive and negative posts (as in a car battery) then the testing across these only two available posts will produce usable trending test data.

6. Protection System Communications Equipment

A. What are some examples of mechanisms to check communications equipment functioning?

~~For Level 1~~For unmonitored Protection Systems, various types of communications systems will have different facilities for on-site integrity checking to be performed at least every three months during a substation visit. Some examples are~~:~~, but not limited to:

- ◊ On-off power-line carrier systems can be checked by performing a manual carrier keying test between the line terminals, or carrier ~~checkback~~check-back test from one terminal.
- ◊ Systems which use frequency-shift communications with a continuous guard signal (over a telephone circuit, analog microwave system, etc.) can be checked by observing for a loss-of-guard indication or alarm. For frequency-shift ~~power line~~ power-line carrier systems, the guard signal level meter can also be checked.
- ◊ Hard-wired pilot wire line Protection Systems typically have pilot-wire monitoring relays that give an alarm indication for a pilot wire ground or open pilot wire circuit loop.
- ◊ Digital communications systems typically have ~~some sort of~~a data reception indicator or data error indicator (based on loss of signal, bit error rate, or frame error checking).

~~For Level 2 partially~~For monitored Protection Systems, various types of communications systems will have different facilities for monitoring the presence of the communications channel, and activating alarms that can be monitored remotely. Some examples are, but not limited to:

- ◊ On-off power-line carrier systems can be shown to be operational by automated periodic power-line carrier ~~checkback~~check-back tests, with remote alarming of failures.
- ◊ Systems which use a frequency-shift communications with a continuous guard signal (over a telephone circuit, analog microwave system, etc.) can be remotely monitored with a loss-of-guard alarm or low signal level alarm.
- ◊ Hard-wired pilot wire line Protection Systems can be monitored by remote alarming of pilot-wire monitoring relays.
- ◊ Digital communications systems can activate remotely monitored alarms for data reception loss or data error indications.

◊ ~~For Level 3 fully monitored~~Systems can be queried for the data error rates.

For the highest degree of monitoring of Protection Systems, the communications system must monitor all aspects of the performance and quality of the channel that show it meets the design performance criteria, including monitoring of the channel interface to protective relays.

- ◊ In many communications systems signal quality measurements including signal-to-noise ratio, received signal level, reflected transmitter power or standing wave ratio, propagation delay, and data error rates are compared to alarm limits. These alarms are connected for remote monitoring.
- ◊ Alarms for inadequate performance are remotely monitored at all times, and the alarm communications system to the remote monitoring site must itself be continuously monitored to assure that the actual alarm status at the communications equipment location is continuously being reflected at the remote monitoring site.

B. What is needed for the 3-month inspection of ~~communication~~communications-assisted trip scheme equipment?

The 3-month inspection applies to ~~Level 1 (Unmonitored)~~unmonitored equipment. An example of compliance with this requirement might be, but is not limited to:

With each site visit, check that the equipment is free from alarms, check any metered signal levels, and that power is still applied. While this might be explicit for a particular type of equipment (~~ie~~i.e., FSK equipment), the concept should be that the entity verify that the communications equipment that is used in a Protection System is operable through a cursory inspection and site visit. This site visit can be eliminated on this particular example if the FSK equipment had a monitored alarm on Loss of Guard.

C. Does a fiber optic I/O scheme used for breaker tripping or control within a station, for example - transmitting a trip signal or control logic between the control house and the breaker control cabinet, constitute a ~~communication~~communications system?

This equipment is presently classified as being part of the Protection System Control Circuitry and tested per the portions of Table 1 applicable to Protection System Control Circuitry rather than those portions of the table applicable to ~~communication~~communications equipment.

D. In Table ~~1b~~1-2, the Maintenance Activities section of the Protective System Communications Equipment and Channels refers to the quality of the channel meeting "performance criteria". What is meant by performance criteria?

Protection System communications channels must have a means of determining if the channel and communications equipment is operating normally. If the channel is not operating normally an alarm will be indicated. For ~~Level 1~~unmonitored systems this alarm will probably be on the panel. For ~~Level 2 and Level 3~~monitored systems, the alarm will be transmitted to a remote location.

Each entity will have established a nominal performance level for each protective system communications channel that is consistent with proper functioning of the Protection System. If that level of nominal performance is not being met, the system will go into alarm. Following are some examples of protective system communications channel performance ~~criteria~~measuring:

- ◊ For direct transfer trip using a frequency shift power line carrier channel, a guard level monitor is part of the equipment. A normal receive level is established when the system is calibrated and if the signal level drops below an established level, the system will indicate an alarm.
- ◊ An on-off blocking signal over power line carrier is used for directional comparison blocking schemes on transmission lines. During a fault, block logic is sent to the remote relays by turning on a local transmitter and sending the signal over the power line to a receiver at the remote end. This signal is normally off so continuous levels cannot be checked. These schemes use ~~checkback~~check-back testing to determine channel performance. A predetermined signal sequence is sent to the remote end and the remote end decodes this signal and sends a signal sequence back. If the sending end receives the correct information from the remote terminal, the test passes and no alarm is indicated. Full power and reduced power tests are typically run. Power levels for these tests are determined at the time of calibration.
- ◊ Pilot wire relay systems use a hardwire communications circuit to communicate between the local and remote ends of the protective zone. This circuit is monitored by circulating a dc current between the relay systems. A typical level may be 1 mA. If the level drops below the setting of the alarm monitor, the system will indicate an alarm.
- ◊ Modern digital relay systems use data communications to transmit relay information to the remote end relays. An example of this is a line current differential scheme commonly used on transmission lines. The protective relays communicate current magnitude and phase information over the communications path to determine if the fault is located in the protective zone. Quantities such as digital packet loss, bit error rate and channel delay are monitored to determine the quality of the channel. These limits are determined and set during relay commissioning. Once set, any channel quality problems that fall outside the set levels will indicate an alarm.

The previous examples show how some protective relay communications channels can be monitored and how the channel performance can be compared to performance criteria established by the entity. This standard does not state what the performance criteria will be - it just requires that the entity establish nominal criteria so protective system channel monitoring can be performed.

7. UVLS and UFLS Relays that Comprise a Protection System Distributed Over the Power System

A. We have an Under Voltage Load Shedding (UVLS) system in place that prevents one of our distribution substations from supplying extremely low voltage in the case of a specific transmission line outage. The transmission line is part of the BES. Does this mean that our UVLS system falls within this standard?

The situation as stated indicates that the tripping action was intended to prevent low distribution voltage ~~for~~to a specific load from a transmission system that was intact except for the line that was out of service~~.~~, as opposed to preventing cascading outage or transmission system collapse.

This Standard is not applicable to this UVLS.

B. We have a UFLS scheme that sheds the necessary load through distribution-side circuit breakers and circuit reclosers. Do the trip-test requirements for circuit breakers apply to our situation?

No. Distributed tripping schemes would have to exhibit multiple failures to trip before they would prove to be significant as opposed to a single failure to trip of, for example, a Transmission Protection System Bus Differential Lock-Out Relay. While many failures of these distribution breakers could add up to be significant, it is also believed that distribution breakers are operated often on just fault clearing duty and therefore the distribution circuit breakers are operated at least as frequently as any requirements that might have appeared in this standard.

C. What does "distributed over the power system" mean?

This refers to the common practice of applying UFLS on the distribution system, with each UFLS individually tripping a relatively low value of load. Therefore, the program is implemented via a large number of individual UFLS components performing independently, and the failure of any individual component to perform properly will have a minimal impact on the effectiveness of the overall UFLS program. Some UVLS systems are applied similarly.

8. SPS or Relay Sensing for Centralized UFLS or UVLS

A. Do I have to perform a full end-to-end test of a Special Protection System?

No. All portions of the SPS need to be maintained, and the portions must overlap, but the overall SPS does not need to have a single end-to-end test.

B. What about SPS interfaces between different entities or owners?

All SPS owners should have maintenance agreements that state which owner will perform specific tasks. As in all of the Protection System requirements, SPS segments can be tested individually~~, but must overlap.~~ thus minimizing the need to accommodate complex maintenance schedules.

C. What do I have to do if I am using a phasor measurement unit (PMU) as part of a Protection System or Special Protection System?

Any Phasor Measurement Unit (PMU) function whose output is used in a ~~protection system~~Protection System or Special Protection System (as opposed to a monitoring task) must be verified as a component in a Protection System.

D. How do I maintain a Special Protection System or Relay Sensing for Centralized UFLS or UVLS Systems?

~~Components~~ Since components of the SPS, UFLS, or UVLS are the same types of components as those in Protection Systems then these components should be maintained like similar components used for other Protection System functions. In many cases the devices for SPS, UFLS and UVLS are also used for other protective functions. The same maintenance activities apply with the exception that distributed systems (UFLS and UVLS) have fewer dc supply and control circuitry maintenance activity requirements.

For the testing of the output action, verification may be by breaker tripping, ~~or other control action that must be verified,~~ but may be verified in overlapping segments. ~~A grouped output control action need be verified only once within the specified~~ For example an SPS that trips a remote circuit breaker might be tested by testing the various parts of the scheme in overlapping segments. Another method is to document the real-time ~~interval, but all of the SPS, UFLS, or UVLS components whose operation leads to that control action must each be verified.~~tripping of an SPS scheme should that occur. Forced trip tests of circuit breakers (etc) that are a part of distributed UFLS or UVLS schemes are not required

E. What does "centralized" mean?

This refers to the practice of applying sensing units at many locations over the system, with all these components providing intelligence to an analytical system which then directs action to address a detected condition. In some cases, this action may not take place at the same location as the sensing units. This approach is often applied for complex SPS, and may be used for UVLS (and perhaps even with UFLS) where necessary to address the conditions of concern.

III Group by Type of BES Facility:

1. All BES Facilities

A. What, exactly, is the BES, or Bulk Electric System?

BES is the abbreviation for Bulk Electric System. BES is a term in the Glossary of Terms Used in Reliability Standards, and is not being modified within this draft Standard.

NERC's approved definition of Bulk Electric System is:

> As defined by the Regional Reliability Organization, the electrical generation resources, transmission lines, interconnections with neighboring systems, and associated equipment, generally operated at voltages of 100 kV or higher. Radial transmission facilities serving only load with one transmission source are generally not included in this definition.

Each Regional Entity implements a definition of the Bulk Electric System that is based on this NERC definition, in some cases, supplemented by additional criteria. These regional definitions have been documented and provided to FERC as part of a *June 16, 2007 Informational Filing*.

2. Generation

A. Please provide a sample list of devices or systems that must be verified in a generator, generator step-up transformer, and generator connected station auxiliary transformer to meet the requirements of this Maintenance Standard.

Examples of typical devices and systems that may directly trip the generator, or trip through a lockout relay may include but are not necessarily limited to:

- Fault protective functions, including distance functions, voltage-restrained overcurrent functions, or voltage-controlled overcurrent functions
- Loss-of-field relays

- Volts-per-hertz relays
- Negative sequence overcurrent relays
- Over voltage and under voltage protection relays
- Stator-ground relays
- Communications-based protection systems such as transfer-trip systems
- Generator differential relays
- Reverse power relays
- Frequency relays
- Out-of-step relays
- Inadvertent energization protection
- Breaker failure protection

For generator step up or generator-connected station auxiliary transformers, operation of any the following associated protective relays frequently would result in a trip of the generating unit and, as such, would be included in the program:

- Transformer differential relays
- Neutral overcurrent relay
- Phase overcurrent relays

A loss of a system-connected station auxiliary transformer could result in a loss of the generating plant if the plant was being provided with auxiliary power from that source, and this auxiliary transformer may directly affect the ability to start up the plant and to connect the plant to the system. Thus, operation of any of the following relays associated with system-connected station auxiliary transformers would be included in the program:

- Transformer differential relays
- Neutral overcurrent relay
- Phase overcurrent relays

Relays which trip breakers serving station auxiliary loads such as pumps, fans, or fuel handling equipment, etc., need not be included in the program even if the loss of the those loads could result in a trip of the generating unit. Furthermore, relays which provide protection to secondary unit substation (SUS) or low switchgear transformers and relays protecting other downstream plant electrical distribution system components are not included in the scope of this program even if a trip of these devices might eventually result in a trip of the generating unit. For example, a thermal overcurrent trip on the motor of a coal-conveyor belt could eventually lead to the tripping of the generator, but it does not cause the trip.

3. Transmission

A. Why is Distribution Provider included within the Applicable Entities and as a responsible entity within several of the requirements? Wouldn't anyone having relevant facilities be a Transmission Owner?

Depending on the station configuration of a particular substation, there may be Protection System equipment installed at a non-transmission voltage level (Distribution Provider equipment) that is wholly or partially installed to protect the BES. PRC-005-2 would apply to

this equipment. An example is underfrequency load-shedding, which is frequently applied well down into the distribution system to meet PRC-007-0.

IV Group by Type of Maintenance Program:

1. All Protection System Maintenance Programs

A. I can't figure out how to demonstrate compliance with the requirements for the highest level ~~3 (fully monitored)~~of monitoring of Protection Systems. Why does this Maintenance Standard describe a maintenance program approach I cannot achieve?

Demonstrating compliance with the requirements for ~~level 3 (fully monitored)~~the highest level of monitoring any particular component of Protection Systems is likely to be very involved, and may include detailed manufacturer documentation of complete internal monitoring within a device, comprehensive design drawing reviews, and other detailed documentation. This Standard does not presume to specify what documentation must be developed; only that it must be ~~comprehensive~~documented.

There may actually be some equipment available that is capable of meeting ~~level 3~~these highest levels of monitoring criteria, in which case it may be maintained according to ~~Table 1c~~the highest level of monitoring shown on the Tables. However, even if there is no equipment available today that can meet this level of monitoring~~,~~; the Standard establishes the necessary requirements for when such equipment becomes available.

By creating a roadmap for development, this provision makes the Standard technology-neutral. The standard drafting team wants to avoid the need to revise the Standard in a few years to accommodate technology advances that are certainly coming to the industry.

B. What forms of evidence are acceptable?

Acceptable forms of evidence, as relevant for the Requirement being documented, include but are not limited to:

- Process documents or plans
- Data (such as relay settings sheets, photos, SCADA, and test records)
- Database lists, records and/or screen shots that demonstrate compliance information
- ~~Diagrams, engineering prints,~~Prints, diagrams and/or schematics~~, maintenance and testing~~
- Maintenance records~~, etc.~~
- Logs (operator, substation, and other types of log)
- Inspection forms
- ~~U.S. or Canadian mail~~Mail, memos, or email proving the required information was exchanged, coordinated, submitted or received
- ~~Database lists and records~~
- Check-off forms (paper or electronic)
- Any record that demonstrates that the maintenance activity was known ~~and~~, accounted for, and/or performed.

C. If I replace a failed Protection System component with another component, what testing do I need to perform on the new component?

The replacement component must be tested to a degree that assures that it will perform as intended. If it is desired to reset the Table 1 maintenance interval for the replacement component, all relevant Table 1 activities for the component should be performed.

D. Please use a specific example to demonstrate the data retention requirements.

The data retention requirements are intended to allow the availability of maintenance records to demonstrate that the time intervals in your maintenance plan were upheld. For example: "Company A" has a maintenance plan that requires its electro-mechanical protective relays be tested, for routine scheduled tests, every 3 calendar years with a maximum allowed grace period of an additional 18 months. This entity would be required to maintain its records of maintenance of its last two routine scheduled tests. Thus its test records would have a latest routine test as well as its previous routine test. The interval between tests is therefore provable to an auditor as being within "Company A's" stated maximum time interval of 4.5 years.

The intent is not to ~~have~~require three test results proving two time intervals, but rather have two test results proving the last interval. The drafting team contends that this minimizes storage requirements while still having minimum data available to demonstrate compliance with time intervals.

Realistically, the Standard is providing advanced notice of audit team documentation requests; this type of information has already been requested by auditors.

If an entity prefers to utilize Performance Based Maintenance then statistical data may well be retained for extended periods to assist with future adjustments in time intervals.

2. Time-Based Protection System Maintenance (TBM) Programs

A. What does this Maintenance Standard say about commissioning? Is it necessary to have documentation in your maintenance history of the completion of commission testing?

This standard does not establish requirements for commission testing. Commission testing includes all testing activities necessary to conclude that a facility has been built in accordance with design. While a thorough commission testing program would include, either directly or indirectly, the verification of all those Protection System attributes addressed by the maintenance activities specified ~~on Table 1a~~in the Tables of PRC-005-2, verification of the adequacy of initial installation necessitates the performance of testing and inspections that go well beyond these routine maintenance activities. For example, commission testing might set baselines for future tests; perform acceptance tests and/or warranty tests; utilize testing methods that are not generally done routinely like staged-fault-tests.

However, many of the Protection System attributes which are verified during commission testing are not subject to age related or service related degradation and need not be re-verified within an ongoing maintenance program. Example – it is not necessary to re-verify correct terminal strip wiring on an ongoing basis.

PRC-005-2 assumes that thorough commission testing was performed prior to a protection system being placed in service. PRC-005-2 requires performance of maintenance activities that are deemed necessary to detect and correct plausible age and service related degradation of components such that a properly built and commission tested Protection System will continue to function as designed over its service life.

It should be noted that commission testing frequently is performed by a different organization than that which is responsible for the ongoing maintenance of the Protection System. Furthermore, the commission testing activities will not necessarily correlate directly with the maintenance activities required by the standard. As such, it is very likely that commission testing records will deviate significantly from maintenance records in both form and content and therefore, it is not necessary to maintain commission testing records within the maintenance program documentation.

~~An~~Notwithstanding the differences in records, an entity would be wise to retain commissioning records to show a maintenance start date. (See next FAQ).

B. How do you determine the initial due date for maintenance?

The initial due date for maintenance should be based upon when a facility and its associated Protection System were placed in service. Alternatively, an entity may choose to use the date of completion of the commission testing of the Protection System component as the starting point in determining its first maintenance due dates. Whichever method is chosen, for newly installed Protection Systems the maintenance program should clearly identify when maintenance is first due.

It is conceivable that there can be a (substantial) difference in time between the date of testing as compared to the date placed into service. The use of the "Calendar Year" language can help determine the next due date without too much concern about being non-compliant for missing test dates by a small amount (provided your dates are not already at the end of a year). However, if there is a substantial amount of time difference between testing and in-service dates then the testing date should be followed because it is the degradation of components that is the concern. While accuracy fluctuations may decrease when components are not energized there are cases when degradation can take place even though the device is not energized. Minimizing the time between commissioning tests and in-service dates will help.

C. The established maximum allowable intervals do not align well with the scheduled outages for my power plant. Can I extend the maintenance to the next scheduled outage following the established maximum interval?

No. You must complete your maintenance within the established maximum allowable intervals in order to be compliant. You will need to schedule your maintenance during available outages to complete your maintenance as required, even if it means that you may do protective relay maintenance more frequently than the maximum allowable intervals. The maintenance intervals were selected with typical plant outages, among other things, in mind.

D. If I am unable to complete the maintenance as required due to a major natural disaster (hurricane, earthquake, etc), how will this affect my compliance with this standard.

The ~~NERC~~ Sanction Guidelines of the North American Electric Reliability Corporation effective January 15, 2008 provides that the Compliance Monitor will consider extenuating circumstances when considering any sanctions.[~~1~~]

E. What if my observed testing results show a high incidence of out-of-tolerance relays, or, even worse, I am experiencing numerous relay misoperations due to the relays being out-of-tolerance?

~~1 Sanction Guidelines of the North American Electric Reliability Corporation. Effective January 15, 2008.~~

~~Any~~The established maximum time intervals are mandatory only as a not-to-exceed limitation. The establishment of a maximum is measurable. But, any entity can choose to test some or all of their Protection System components more frequently (or, to express it differently, exceed the minimum requirements of the Standard). Particularly, if you find that the maximum intervals in the Standard do not achieve your expected level of performance, it is understandable that you would maintain the related equipment more frequently. A high incidence of relay Misoperations is in no one's best interest. The BES and an entity's bottom line both suffer.

F. We believe that the 3-month interval between inspections is unneccessary, why can we not perform these inspections twice per year?

The standard drafting team believes that routine monthly inspections are the norm. To align routine station inspections with other important inspections the 3-month interval was chosen. In lieu of station visits many activities can be accomplished with automated monitoring and alarming.

G. Our maintenance plan calls for us to perform routine protective relay tests every 3 years; if we are unable to achieve this schedule but we are able to complete the procedures in less than the Maximum Time Interval then are we in or out of compliance?

You are out of compliance. You must maintain your equipment to your stated intervals within your maintenance plan. The protective relays (and any Protection System component) cannot be tested at intervals that are longer than the maximum allowable interval stated in the Tables~~.~~ and yet you must conform to your own maintenance plan. Therefore you should design your maintenance plan such that it is not in conflict with the Minimum Activities and the Maximum Intervals. You then must maintain your equipment according to your maintenance plan. You will end up being compliant with both the standard and your own plan.

H. How do I achieve a "grace period" without being out of compliance?

For the purposes of this example, concentrating on just unmonitored protective relays, because there are more relays out there than anything else – Table 1-1 specifies a maximum time interval (between the mandated maintenance activities) of 6 calendar years. Your plan must ensure that your unmonitored relays are tested at least once every 6 calendar years. You could, within your PSMP, require that your unmonitored relays be tested every 4 calendar years with a maximum allowable time extension of 18 calendar months. This allows an entity to have deadlines set for the auto-generation of work orders but still have the flexibility in scheduling complex work schedules. This also allows for that 18 calendar months to act as a buffer, a grace period, in the event of unforeseen events. You will note that this example of a maintenance plan interval has a planned time of 4 years; it also has a built-in time extension allowed within the PSMP and yet does not exceed the maximum time interval allowed by the standard. So while there are no time extensions allowed beyond the standard, an entity can still have substantial flexibility to maintain their Protection System components.

I. If I miss two battery inspections four times out of 100 protection system components on my transmission system, does that count as 2 percent or 8 percent when counting Violation Severity Level (VSL) for R4?

The entity failed to complete its scheduled program on two of its one hundred protection system components which would equate to two percent for application to the VSL Table for Requirement R4.

3. Performance-Based Protection System Maintenance (PBM) Programs

A. I'm a small entity and cannot aggregate a population of Protection System components to establish a segment required for a Performance-Based Protection System Maintenance Program. How can I utilize that opportunity?

Multiple asset owning entities may aggregate their individually owned populations of individual Protection System components to create a segment that crosses ownership boundaries. All entities participating in a joint program should have a single documented joint management process, with consistent Protection System Maintenance Programs (practices, maintenance intervals and criteria), for which the multiple owners are individually responsible with respect to the requirements of the Standard. The requirements established for performance-based maintenance must be met for the overall aggregated program on an ongoing basis.

The aggregated population should reflect all factors that affect consistent performance across the population, including any relevant environmental factors such as geography, power-plant vs. substation, and weather conditions.

B. Can an owner go straight to a performance-based maintenance program schedule, if they have previously gathered records?

Yes. An owner can go to a performance-based maintenance program immediately. The owner will need to comply with the requirements of a performance-based maintenance program as listed in the standard. Gaps in the data collected will not be allowed; therefore, if an owner finds that a gap exists such that they ~~can not~~cannot prove that they have collected the data as required for a performance-based maintenance program then they will need to wait until they can prove compliance.

C. When establishing a performance-based maintenance program, can I use test data from the device manufacturer, or industry survey results, as results to help establish a basis for my performance-based intervals?

No. You must use actual in-service test data for the components in the segment.

D. What types of misoperations or events are not considered countable events in the performance-based Protection System Maintenance (PBM) Program?

Countable events are intended to address conditions that are attributed to hardware failure or calibration failure; that is, conditions that reflect deteriorating performance of the component. These conditions include any condition where the device previously worked properly, then, due to changes within the device, malfunctioned.

~~Human~~For this purpose of tracking hardware issues, human errors resulting in Protection System ~~Misoperations~~misoperations during system installation or maintenance activities are not considered countable events. Examples of excluded human errors include relay setting errors, design errors, wiring errors, inadvertent tripping of devices during testing or installation, and misapplication of Protection System components. Examples of misapplication of Protection System components include wrong CT or PT tap position, protective relay function

misapplication, and components not specified correctly for their installation. Obviously, if one is setting up relevant data about hardware failures then human failures should be eliminated from the hardware performance analysis.

One example of human-error is not pertinent data might be in the area of testing "86" Lock-Out Relays (LOR). "Entity A" has two types of LOR's type "X" and type "Y"; they want to move into a performance based maintenance interval. They have 1000 of each type, so the population variables are met. During electrical trip testing of all of their various schemes over the initial six-year interval they find zero type "X" failures, but human error led to tripping a BES element 100 times; they find 100 type "Y" failures and had an additional 100 human-error caused tripping incidents. In this example the human-error caused misoperations should not be used to judge the performance of either type of LOR. Analysis of the data might lead "Entity A" to change time intervals. Type "X" LOR can be placed into extended time interval testing because of its low failure rate (zero failures) while Type "Y" would have to be tested more often than every 6 calendar years (100 failures divided by 1000 units exceeds the 4% tolerance level).

Certain types of Protection System component errors that cause ~~Misoperations~~misoperations are not considered countable events. Examples of excluded component errors include device malfunctions that are correctable by firmware upgrades and design errors that do not impact protection function.

E. What are some examples of methods of correcting segment perfomance for Performance-Based Maintenance?

There are a number of methods that may be useful for correcting segment performance for mal-performing segments in a performance-based maintenance system. Some examples are listed below.

- The maximum allowable interval, as established by the performance-based maintenance system, can be decreased. This may, however, be slow to correct the performance of the segment.
- Identifiable sub-groups of components within the established segment, which have been identified to be the mal-performing portion of the segment, can be broken out as an independent segment for target action. Each resulting segment must satisfy the minimum population requirements for a performance-based maintenance program in order to remain within the program.
- Targeted corrective actions can be taken to correct frequently occurring problems. An example would be replacement of capacitors within electromechanical distance relays if bad capacitors were determined to be the cause of the mal-performance.
- Components within the mal-performing segment can be replaced with other components (electromechanical distance relays with microprocessor relays, for example) to remove the mal-performing segment.

F. If I find (and correct) a maintenance-correctable issue as a result of a misoperation investigation (Re: PRC-004), how does this affect my performance-based maintenance program?

If you perform maintenance on a Protection System component for any reason (including as part of a PRC-004 required misoperation investigation/corrective action), the actions performed can count as a maintenance activity, and "reset the clock" on everything you've done. In a performance-based maintenance program, you also need to record the maintenance-correctable issue with the relevant component group and use it in the analysis to determine your correct performance-based maintenance interval for that component group. Note that "resetting the clock" should not be construed as interfering with an entity's routine testing schedule because the "clock-reset" would actually make for a decreased time interval by the time the next routine test schedule comes around.

For example a relay scheme, consisting of 4 relays, is tested on 1-1-11 and the PSMP has a time interval of 3 calendar years with an allowable extension of 1 calendar year. The relay would be due again for routine testing before the end of the year 2015. This mythical relay scheme has a misoperation on 6-1-12 that points to one of the four relays as bad. Investigation proves a bad relay and a new one is tested and installed in place of the original. This replacement relay actually could be retested before the end of the year 2016 (clock-reset) and not be out of compliance. This requires tracking maintenance by individual relays and is allowed. However, many companies schedule maintenance in other ways like by substation or by circuit breaker or by relay scheme. By these methods of tracking maintenance that "replaced relay" will be retested before the end of the year 2015. This is also acceptable. In no case was a particular relay tested beyond the PSMP of 4 years max, nor was the 6 year max of the standard exceeded. The entity can reset the clock if they desire or the entity can continue with original schedules and, in effect, test even more frequently.

G. Why are batteries excluded from PBM? What about exclusion of batteries from condition based maintenance?

Batteries are the only element of a Protection System that is a perishable item with a shelf life. As a perishable item batteries require not only a constant float charge to maintain their freshness (charge), but periodic inspection to determine if there are problems associated with their aging process and testing to see if they are maintaining a charge or can still deliver their rated output as required.

Besides being perishable, a second unique feature of a battery that is unlike any other Protection System element is that a battery uses chemicals, metal alloys, plastics, welds, and bonds that must interact with each other to produce the constant dc source required for Protection Systems, undisturbed by ac system disturbances.

No type of battery manufactured today for Protection System application is free from problems that can only be detected over time by inspection and test. These problems can arise from variances in the manufacturing process, chemicals and alloys used in the construction of the individual cells, quality of welds and bonds to connect the components, the plastics used to make batteries and the cell forming process for the individual battery cells.

Other problems that require periodic inspection and testing can result from transportation from the factory to the job site, length of time before a charge is put on the battery, the method of installation, the voltage level and duration of equalize charges, the float voltage level used, and the environment that the battery is installed in.

All of the above mentioned factors and several more not discussed here are beyond the control of the Functional Entities that want to use a performance-based Protection System Maintenance

(PBM) program. These inherent variances in the aging process of a battery cell make establishment of a designated segment based on manufacturer and type of battery impossible.

The whole point of PBM is that if all variables are isolated then common aging and performance criteria would be the same. However, there are too many variables in the electro-chemical process to completely isolate all of the performance-changing criteria.

Similarly Functional Entities that want to establish a condition-based maintenance program using ~~Level 3~~ the highest levels of monitoring; resulting in the least amount of hands-on maintenance activity, of the battery used in a station dc supply ~~can not do so~~cannot completely eliminate some periodic maintenance. Inspection of the battery is required on a Maximum Maintenance Interval listed in the tables due to the aging processes of station batteries. However, ~~Level 3~~higher degrees of monitoring of a battery can eliminate the requirement for some periodic testing and some inspections (see ~~Level 3 Monitoring Attributes for Component of table 1c~~Table 1-4).

H. Please provide an example of the calculations involved in extending maintenance time intervals using PBM.

Entity has 1000 GE-HEA lock-out relays; this is greater than the minimum sample requirement of 60

~~.~~ They start out testing all of the relays within the prescribed Table requirements (6 year max) by testing the relays every 5 years. The entity's plan is to test 200 units per year; this is greater than the minimum sample size requirement of 30.

For the sake of example only the following will show 6 failures per year, reality may well have different numbers of failures every year. PBM requires annual assessment of failures found per units tested.

After the first year of tests the entity finds 6 failures in the 200 units tested. 6/200= 3% failure rate.

This entity is now allowed to extend the maintenance interval if they choose.

The entity chooses to extend the maintenance interval of this population segment out to 10 years.

This represents a rate of 100 units tested per year; entity selects 100 units to be tested in the following year.

After that year of testing these 100 units the entity again finds 6 failed units. 6/100= 6% failures.

This entity has now exceeded the acceptable failure rate for these devices and must accelerate testing of all of the units at a higher rate such that the failure rate is found to be less than 4% per year; the entity has three years to get this failure rate down to 4% or less (per year).

In response to the 6% failure rate, the entity decreases the testing interval to 8 years. This means that they will now test 125 units per year (1000/8). The entity has just two years left to get the test rate corrected.

After a year they again find 6 failures out of the 125 units tested. 6/125= 5% failures.

In response to the 5% failure rate, the entity decreases the testing interval to 7 years. This means that they will now test 143 units per year (1000/7). The entity has just one year left to get the test rate corrected.

After a year they again find 6 failures out of the 143 units tested. 6/143= 4.2% failures.

(Note that the entity has tried 5 years and they were under the 4% limit and they tried 7 years and they were over the 4% limit. They must be back at 4% failures or less in the next year so they might simply elect to go back to 5 years.)

Instead, in response to the 5% failure rate, the entity decreases the testing interval to 6 years. This means that they will now test 167 units per year (1000/6).

After a year they again find 6 failures out of the 167 units tested. 6/167= 3.6% failures.

Entity found that they could maintain the failure rate at no more than 4% failures by maintaining the testing interval at 6 years or less. Entity chose 6 year interval and effectively extended their TBM (5 years) program by 20%.

A note of practicality is that an entity will probably be in better shape to lengthen the intervals between tests if the failure rate is less than 2%. But the requirements allow for annual adjustments if the entity desires. As a matter of maintenance management, an ever-changing test rate (units tested / year) may be un-workable.

Note that the "5% of components" requirement effectively sets a practical limit of 20 year maximum PBM interval. Also of note is the "3 years" requirement; this is there to prevent an entity from "gaming the system". An entity might arbitrarily extend time intervals from 6 years to 20 years. In the event that an entity finds a failure rate greater than 4% then the test rate must be accelerated such that within three years the failure rate must be brought back down to 4% or less.

Here is a table that demonstrates the values discussed:

Year #	Total Population (P)	Test Interval (I)	Units to be Tested (U= P/I)	# of Failures Found (F)	Failure Rate (=F/U)	Decision to Change Interval Yes or No	Interval Chosen
1	1000	5 yrs	200	6	3%	Yes	10 yrs
2	1000	10 yrs	100	6	6%	Yes	8 yrs
3	1000	8 yrs	125	6	5%	Yes	7 yrs
4	1000	7 yrs	143	6	4.2%	Yes	6 yrs
5	1000	6 yrs	167	6	3.6%	No	6 yrs

V Group by Monitoring Level:

1. All Monitoring Levels

A. Please provide an example of the ~~level 1 monitored (~~unmonitored~~)~~ versus other levels of monitoring available?

~~A level 1 (Unmonitored)~~An unmonitored Protection System has no monitoring and alarm circuits on the Protection System components. A Protection System component that has monitoring attributes but no alarm output connected is considered to be un-monitored.

A ~~level 2 (Partially)~~ monitored Protection System or an individual monitored component of a ~~level 2 (Partially) monitored~~ Protection System has monitoring and alarm circuits on the Protection System components. The alarm circuits must alert, within 24 hours, a ~~24-hr staffed operations center~~location wherein corrective action can be initiated. This location might be, but not limited to an Operations Center, Dispatch Office, Maintenance Center or even a portable SCADA system.

There can be a combination of monitored and unmonitored Protection Systems within any given scheme, substation or plant; there can also be a combination of monitored and unmonitored components within any given Protection System.

Example #1: A combination of ~~level 2 (Partially)~~ monitored and ~~level 1 (~~unmonitored~~)~~ components within a given Protection System ~~is~~might be:

- ◊ A microprocessor relay with an internal alarm connected to SCADA to alert 24-hr staffed operations center. (~~level 2~~monitored)
- ◊ Instrumentation transformers, with no monitoring, connected as inputs to that relay. (~~level 1~~unmonitored)
- ◊ A vented lead-acid battery with low voltage alarm and unintentional grounds detection alarm connected to SCADA. (monitored except for electrolyte level ~~2~~)
- ◊ A circuit breaker with a trip coil~~, with no monitor circuit. (level 1~~ and the trip circuit is not monitored. (unmonitored)

Given the particular components~~,~~ and conditions, and using the Table 1 ("Maximum Allowable Testing Intervals and Maintenance Activities"), the particular components have maximum activity intervals of:

- ◊ Every 3 calendar months check electrolyte level (cell voltage and unintentional ground detection is being maintained more frequently by the monitoring system).
- ◊ Every 18 calendar months check battery bank ohmic values (if performance tests are not opted), battery float voltage and battery rack integrity.
- ◊ Every 6 calendar years battery performance test (if ohmic tests are not opted), battery charger alarms verified and trip test circuit breakers, electro-mechanical lock-out relays and auxiliary relays.
- ◊ Every 12 calendar years the microprocessor relay, the instrumentation transformers and the control circuitry are verified.

Example #2: A combination of monitored and unmonitored components within a given Protection System might be:

- ◊ A microprocessor relay with integral alarm that is not connected to SCADA. (unmonitored)
- ◊ Instrument transformers, with no monitoring, connected as inputs to that relay. (monitored)
- ◊ A vented lead-acid battery with low voltage and ground-detection alarms connected to SCADA. (monitored except for electrolyte level)
- ◊ A circuit breaker with a trip coil, with no circuits monitored. (unmonitored)

Given the particular components and conditions, and using the Table 1 ("Maximum Allowable Testing Intervals and Maintenance Activities"), the particular components have maximum ~~test~~activity intervals of:

- ◊ ~~The~~ Every 3 calendar months check electrolyte level (cell voltage and unintentional ground detection is being maintained more frequently by the monitoring system).
- ◊ Every 18 calendar months check battery bank ohmic values (if performance tests are not opted), battery float voltage and battery rack integrity.
- ◊ Every 6 calendar years microprocessor relay is verified ~~every 12 calendar years~~, battery performance test (if ohmic tests are not opted), battery charger alarms verified and trip test circuit breakers, electro-mechanical lock-out relays and auxiliary relays.
- ~~◊ The~~ Every 12 calendar years the instrumentation transformers and the control circuitry are verified ~~every 12 calendar years.~~
- ~~◊ The battery is verified every 6 calendar years by performing a performance capacity test of the entire battery bank or by evaluating the measured cell/unit internal ohmic values to station battery baseline every 18 months.~~
- ◊ ~~The circuit breaker trip circuits and auxiliary relays are tested every 6 calendar years~~.

Example #~~2~~3: A combination of ~~level 2 (partially)~~ monitored and ~~level 1 (~~unmonitored~~)~~ components within a given Protection System ~~is:~~

- ~~◊ A microprocessor relay with integral alarm that is not connected to SCADA. (level 1)~~
- ~~◊ Instrument transformers, with no monitoring, connected as inputs to that relay. (level 1)~~
- ~~◊ A vented lead-acid battery with low voltage alarm connected to SCADA. (level 2)~~
- ~~◊ A circuit breaker with a trip coil, with no circuits monitored. (level 1)~~

~~Given the particular components, conditions, and using the Table 1 ("Maximum Allowable Testing Intervals and Maintenance Activities"), the particular components have maximum test intervals of:~~

- ~~◊ The microprocessor relay is verified every 6 calendar years.~~
- ~~◊ The instrumentation transformers are verified every 12 calendar years.~~
- ~~◊ The battery is verified every 6 calendar years by performing a performance capacity test of the entire battery bank or by evaluating the measured cell/unit internal ohmic values to station battery baseline every 18 months.~~
- ~~◊ The circuit breaker trip circuits and auxiliary relays are tested every 6 calendar years.~~

~~**Example #3:** A combination of level 2 (partially) monitored and level 1 (unmonitored) components within a given Protection System is~~might be:

- ◊ A microprocessor relay with alarm connected to SCADA to alert 24-hr staffed operations center. (~~level 2~~monitored)
- ◊ Instrument transformers, with no monitoring, connected as inputs to that relay (~~level 1~~unmonitored)
- ◊ Battery without any alarms connected to SCADA (~~level 1~~unmonitored)
- ◊ Circuit breaker with a trip coil, with no circuits monitored (~~level 1~~unmonitored)

Given the particular components, conditions, and using the Table 1 ("Maximum Allowable Testing Intervals and Maintenance Activities"), the particular components shall have maximum ~~test~~activity intervals of:

- ◊ ~~The~~ Every 3 calendar months check battery bank voltage, check for unintentional grounds and check electrolyte level.
- ◊ Every 18 calendar months check battery bank ohmic values (if performance tests are not opted), battery float voltage and battery rack integrity.
- ◊ Every 6 calendar years battery performance test (if ohmic tests are not opted), battery charger alarms verified and trip test circuit breakers, electro-mechanical lock-out relays and auxiliary relays.
- ~~◊~~ Every 12 calendar years the microprocessor relay ~~is verified every 12 calendar years.~~
- ~~◊~~ ~~The instrument~~, the instrumentation transformers and the control circuitry are verified ~~every 12 calendar years.~~
- ~~◊ The battery is verified every 3 months, every 18 months, plus, depending upon the type of battery used it may be verified at other maximum test intervals, as well.~~
- ◊ ~~The circuit breaker trip circuits and auxiliary relays are tested every 6 calendar years~~.

B. What is the intent behind the different levels of monitoring?

The intent behind different levels of monitoring is to allow less frequent manual intervention when more information is known about the condition of Protection System components. Condition-Based Maintenance is a valuable asset to improve reliability.

C. Do all monitoring levels apply to all components in a protection system?

No. For some components in a protection system, certain levels of monitoring will not be relevant. ~~See table below:~~ For example a battery will always need some kind of inspection.

D. My microprocessor relays and dc circuit alarms are contained on relay panels in a 24-hour attended control room. Does this qualify as an extended time interval condition-based system?

Yes, provided the station attendant (plant operator, etc.) monitors the alarms and other indications (comparable to the monitoring attributes) and reports them within the given time limits that are stated in the criteria of the ~~Table 1b or Table 1c.~~

~~**Monitoring Level Applicability Table**~~Tables.

~~(See related definition and decision tree for various level requirements)~~

~~Protection Component~~	~~Level 1 (Unmonitored)~~	~~Level 2 (Partially Monitored)~~	~~Level 3 (Fully Monitored)~~
~~Protective relays~~	~~Y~~	~~Y~~	~~Y~~
~~Instrument transformer Inputs to Protective Relays~~	~~Y~~	~~N~~	~~Y~~
~~Protection System control circuitry (Other than aux-relays & lock-out relays)~~	~~Y~~	~~Y~~	~~Y~~
~~Aux-relays & lock-out relays~~	~~Y~~	~~N~~	~~N~~
~~DC supply (other than station batteries)~~	~~Y~~	~~Y~~	~~Y~~
~~Station batteries~~	~~Y~~	~~N~~	~~N~~
~~Protection system communications equipment and channels~~	~~Y~~	~~Y~~	~~Y~~
~~UVLS and UFLS relays that comprise a protection scheme distributed over the power system~~	~~Y~~	~~Y~~	~~Y~~
~~SPS, including verification of end-to-end performance, or relay sensing for centralized UFLS or UVLS systems~~	~~Y~~	~~Y~~	~~Y~~

~~Y = Monitoring Level Applies~~
~~N = Monitoring Level Not Applicable~~

E. When documenting the basis for inclusion of components into the appropriate levels of monitoring as per Requirement R2 of the standard, is it necessary to provide this documentation ~~via a~~about the device by ~~device~~ listing of ~~components~~every component and the specific monitoring attributes of each device?

No. While maintaining this documentation on the device level would certainly be permissible, it is not necessary. Global statements can be made to document appropriate levels of monitoring for the entire population of a component type or portion thereof.
For example, it would be permissible to document the conclusion that all BES substation dc ~~systems are Level 2 - Partially~~supply battery chargers are Monitored by stating the following within the program description:

> "All substation dc ~~systems~~supply battery chargers are considered ~~Level 2 - Partially~~ Monitored and subject to the rows for monitored equipment of Table ~~1b~~1-4 requirements as all substation dc ~~systems~~supply battery chargers are equipped with dc

> voltage alarms and ground detection alarms that are sent to the manned control center."

Similarly, it would be acceptable to use a combination of a global statement and a device level list of exclusions. Example:

> "Except as noted below, all substation dc ~~systems~~supply battery chargers are considered ~~Level 2 – Partially~~ Monitored and subject to the rows for monitored equipment of Table ~~1b~~1-4 requirements as all substation dc ~~systems~~supply battery chargers are equipped with dc voltage alarms and ground detection alarms that are sent to the manned control center. The dc ~~systems~~supply battery chargers of Substation X, Substation Y, and Substation Z are considered ~~Level 1 –~~ Unmonitored and subject to the rows for unmonitored equipment in Table ~~1a~~1-4 requirements as they are not equipped with ground detection capability."

Regardless whether this documentation is provided ~~via a device~~ by device listing of monitoring attributes, by global statements of the monitoring attributes of an entire population of component types, or by some combination of these methods, it should be noted that auditors may request supporting drawings or other documentation necessary to validate the inclusion of the device(s) within the appropriate level of monitoring. This supporting background information need not be maintained within the program document structure but should be retrievable if requested by an auditor.

~~F. How do I know what monitoring level I am under? – Include Decision Trees~~

~~Decision Trees are provided below for each of the following categories of equipment to assist in the determination of the level of monitoring.~~

- ~~◊ Protective Relays~~
- ~~◊ Current and Voltage Sensing Devices~~
- ~~◊ Protection System Control Circuitry~~
- ~~◊ Station dc Supply~~
- ~~◊ Protection System Communication Systems~~

RELAY
MONITOR LEVEL
DECISION TREE

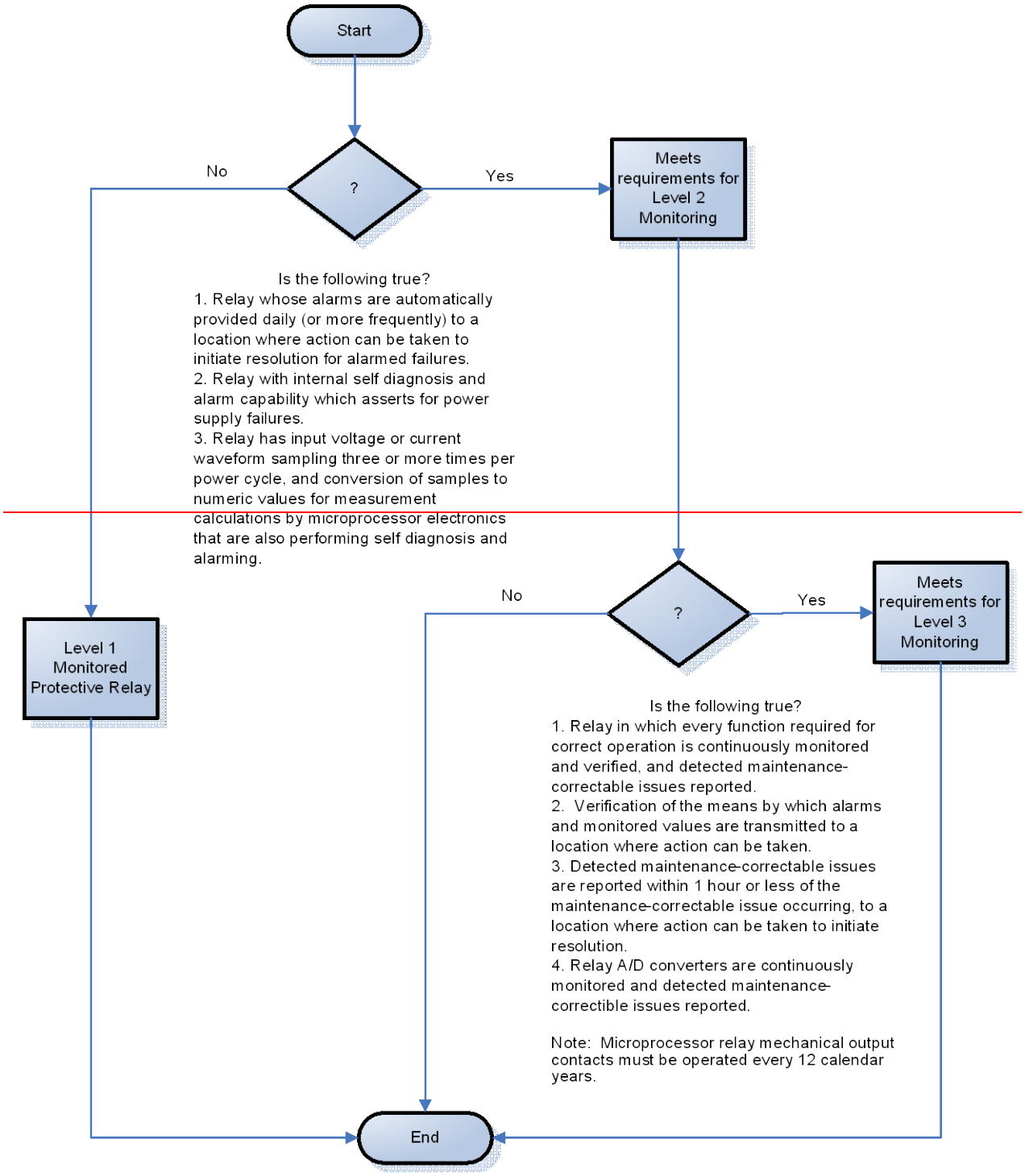

VOLTAGE AND CURRENT SENSING DEVICES

MONITOR LEVEL DECISION TREE

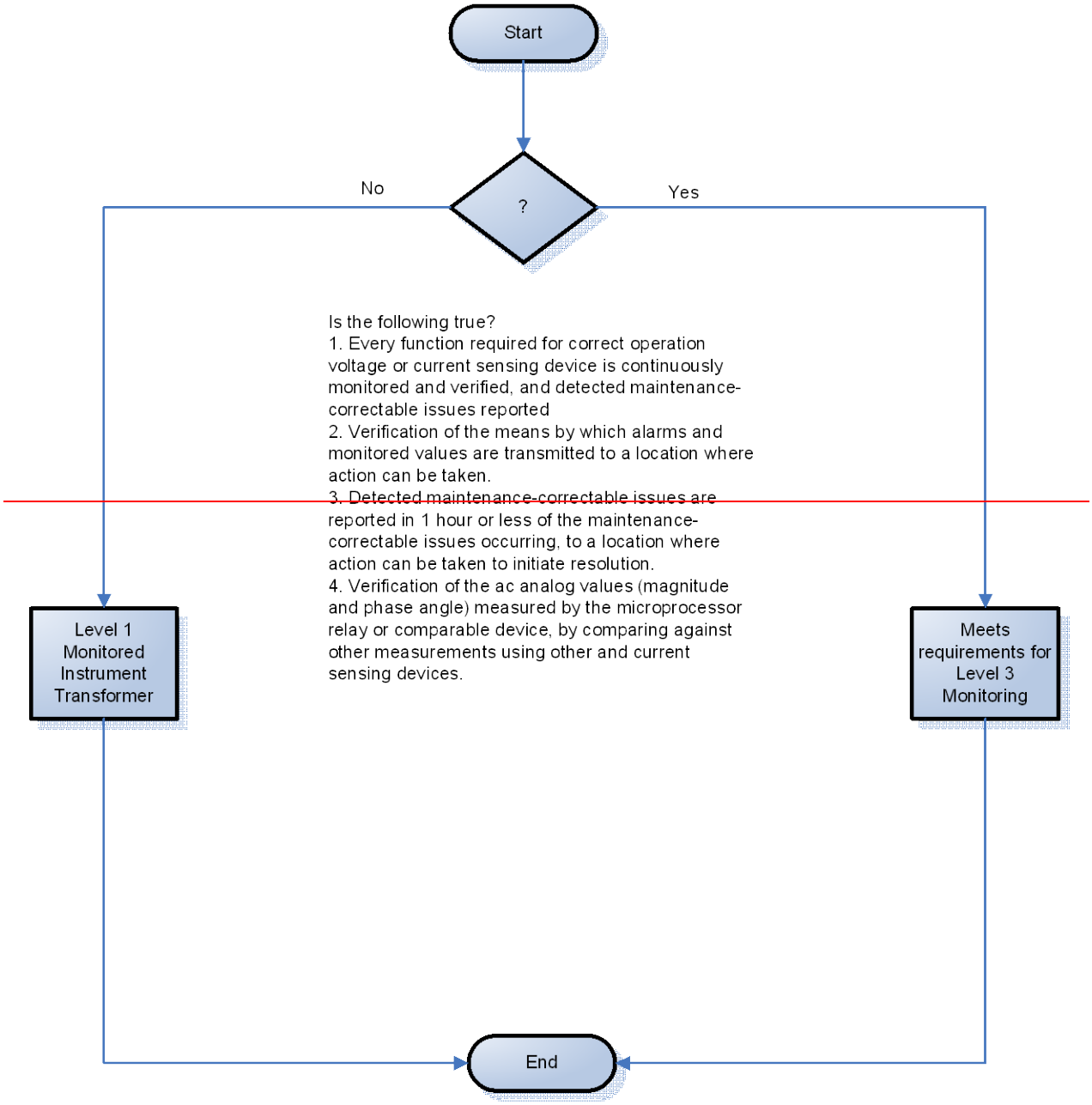

CONTROL CIRCUIT
MONITOR LEVEL
DECISION TREE

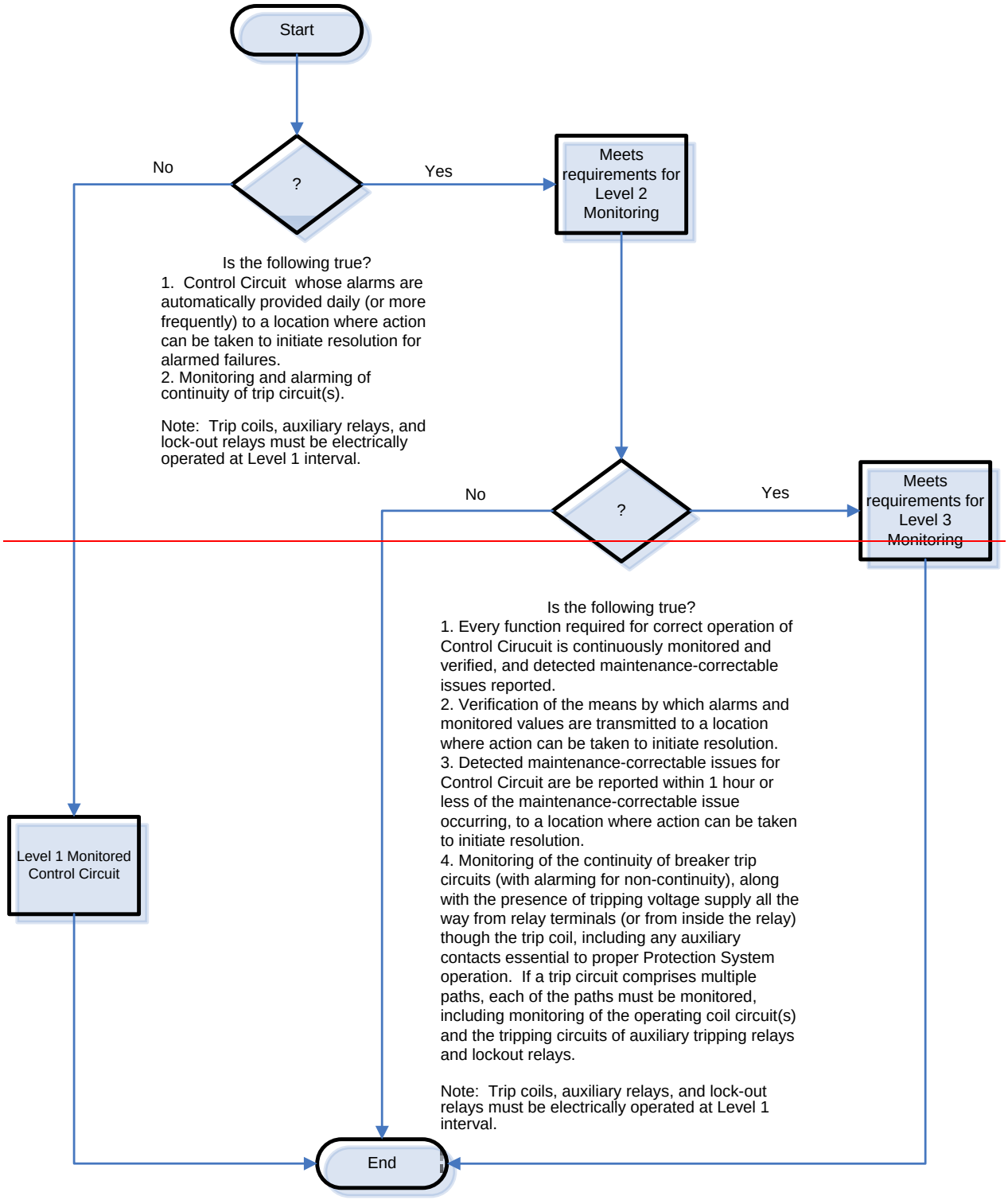

DC SUPPLY
MONITOR LEVEL
DECISION TREE

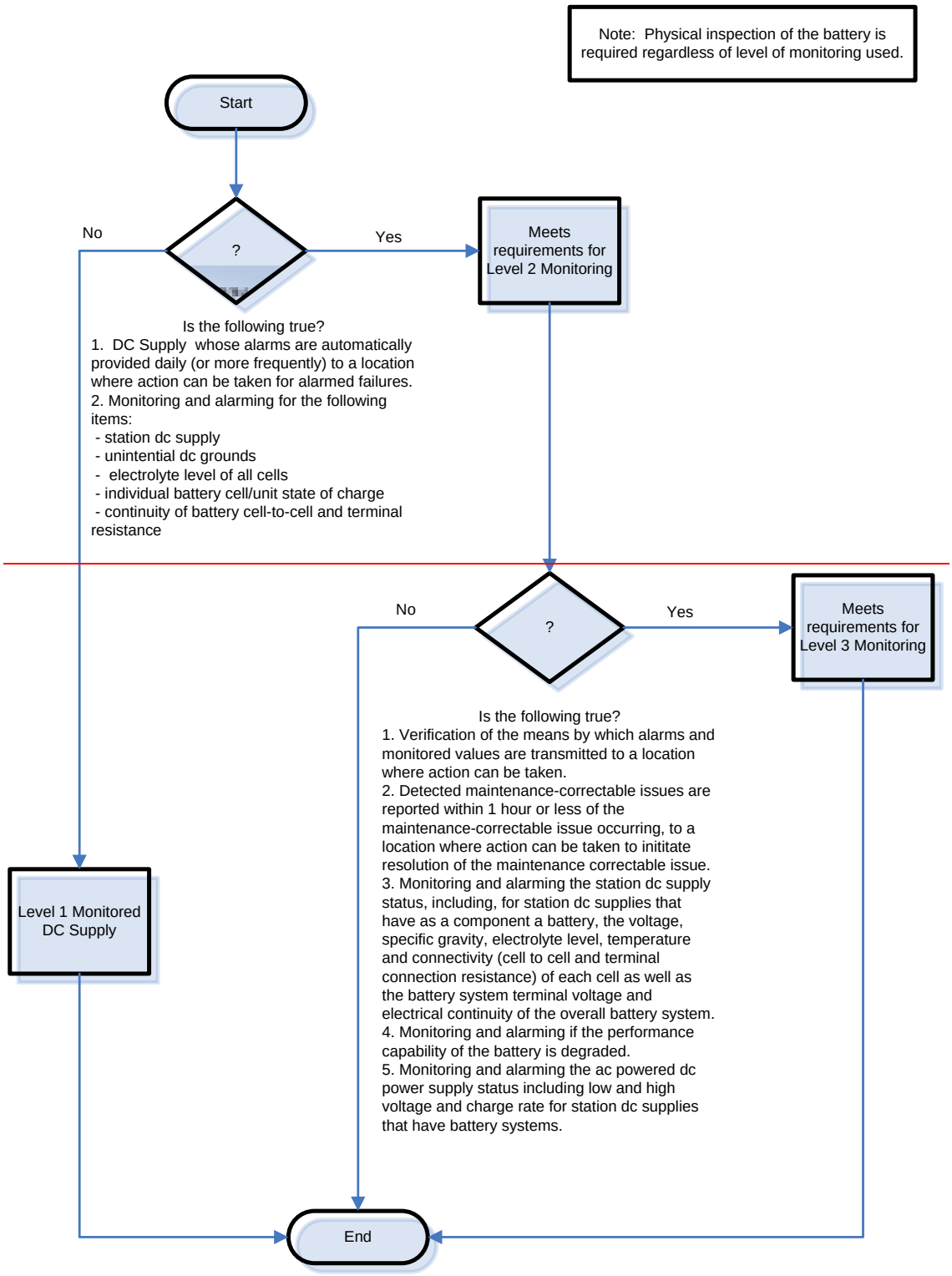

COMMUNICATION SYSTEM
MONITOR LEVEL
DECISION TREE

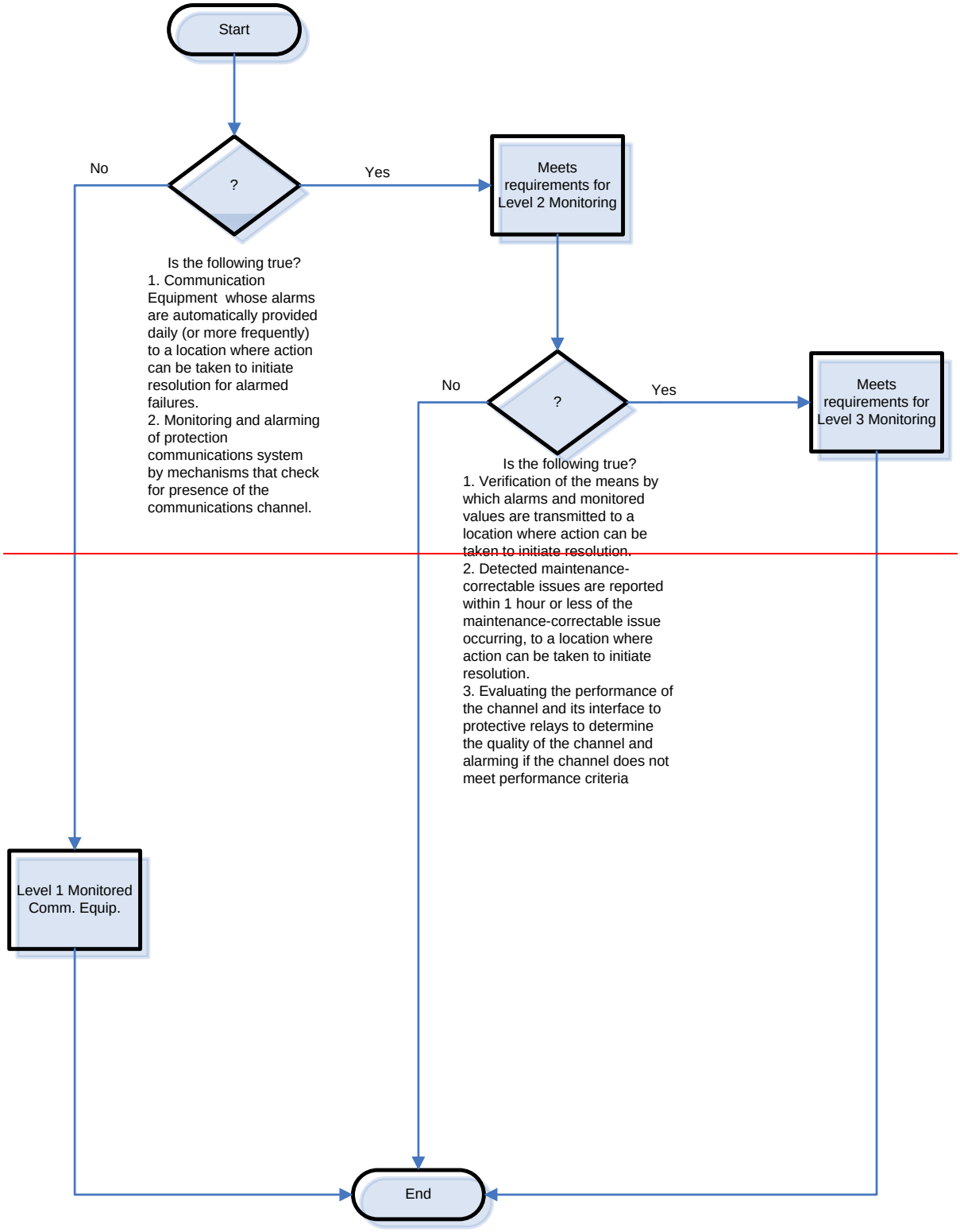

2. ~~Level 1 Monitored Protection Systems (~~Unmonitored Protection Systems ~~)~~

A. We have an electromechanical (unmonitored) relay that has a trip output to a lockout relay (unmonitored) which trips our transformer off-line by tripping the transformer's high-side and low-side circuit breakers. What testing must be done for this system?

This system is made up of components that are ~~level 1 (~~all unmonitored~~).~~. Assuming a time-based protection system maintenance program schedule~~,~~ (as opposed to a performance-based maintenance program), each component must be maintained per ~~Table 1a – Level 1 Monitoring Maximum Allowable Testing Intervals and Maintenance Activities.~~the most frequent hands-on activities listed in the Tables 1-1 through 1-5.

3. ~~Level 2~~ Monitored Protection Systems ~~(Partially Monitored Protection Systems)~~

A. We have a 30 year old oil circuit breaker with a red indicating lamp on the substation relay panel that is illuminated only if there is continuity through the breaker trip coil. There is no SCADA monitor or relay monitor of this trip coil. The line protection relay package that trips this circuit breaker is a microprocessor relay that has an integral alarm relay that will assert on a number of conditions that includes a loss of power to the relay. This alarm contact connects to our SCADA system and alerts our 24-hour operations center of relay trouble when the alarm contact closes. This microprocessor relay trips the circuit breaker only and does not monitor trip coil continuity or other things such as trip current. Is this an unmonitored or a partially-monitored system? How often must I perform maintenance?

The protective relay is ~~a level 2 (partially)~~ monitored ~~component of your protection system~~ and can be maintained every 12 years or when a maintenance correctable issue arises. ~~Assuming a time-based protection system maintenance program schedule, this component must be maintained per Table 1b – Level 2 Monitoring Maximum Allowable Testing Intervals and Maintenance Activities~~ The control circuitry has no electro-mechanical parts and can be maintained every 12 years. The trip coil(s) has to be electrically operated at least once every 6 years.

~~The rest of your protection system contains components that are level 1 (unmonitored) and must be maintained within at least the maximum verification intervals of Table 1a.~~

B. How do I verify the A/D converters of microprocessor-based relays?

There are a variety of ways to do this. ~~Examples include~~ Two examples would be: using values gathered via data communications and automatically comparing these values with values from other sources, ~~and~~or using groupings of other measurements (such as vector summation of bus feeder currents) for comparison ~~if calibration requirements assure acceptable measurement of power system input values. Other~~. Many other methods are possible.

C. ~~For a level 2 monitored Protection System (Partially Monitored Protection System) pertaining to~~How is the performance criteria of Protection System communications equipment ~~and channels, how is the performance criteria~~ involved in the maintenance program?

~~The~~An entity determines the acceptable performance criteria ~~for each installation,~~ depending on the technology implemented. If the ~~communication~~communications channel performance of a Protection System varies from the pre-determined performance criteria for that system~~,~~ then these results should be investigated and resolved.

D. My system has alarms that are gathered once daily through an auto-polling system; this is not really a conventional SCADA system but does it meet the Table ~~1b~~1 requirements for inclusion as ~~Level 2~~a monitored system?

Yes, provided the auto-polling that gathers the alarms reports those alarms to a location where the action can be initiated to correct the maintenance-correctable issue. This location does not have to be the location of the engineer or the technician that will eventually repair the problem, but rather a location where the action can be initiated.

4. ~~Level 3~~ Monitored Protection Systems ~~(Fully Monitored Protection Systems)~~that also monitor alarm path failures

A. Why are there activities defined for levels of monitoring a ~~level 3 monitored~~ Protection System~~? The~~ component when that level of technology ~~does~~may not ~~seem to exist at this time to implement this monitoring level.~~yet be available?

There may ~~actually~~already be some equipment available that is capable of meeting ~~level 3~~the highest levels of monitoring criteria~~,~~ listed in ~~which case it may be maintained according to Table 1c~~the Tables. However, even if there is no equipment available today that can meet this level of monitoring~~;~~ the Standard establishes the necessary requirements for when such equipment becomes available. By creating a roadmap for development, this provision makes the Standard technology-neutral. The standard drafting team wants to avoid the need to revise the Standard in a few years to accommodate technology advances that ~~are certainly~~may be coming to the industry.

Appendix A — Protection System Maintenance Standard Drafting Team

Charles W. Rogers
Chairman
Consumers Energy Co.

John B. Anderson
Xcel Energy

Merle E. Ashton
Tri-State G&T

Bob Bentert
Florida Power & Light Company

John Ciufo
Hydro One Inc

Sam Francis
Oncor

Carol A Gerou
Midwest Reliability Organization

William Shultz
Southern Company Generation

Russell C Hardison
Tennessee Valley Authority

David Harper
NRG Texas Maintenance Services

Mark Lukas
ComEd

Al McMeekin
NERC Staff
North American Electric Reliability Corporation

Mark Peterson
Great River Energy

~~William Shultz~~
~~Southern Company Generation~~

Leonard Swanson, Jr
National Grid USA

Eric A Udren
Quanta Technology

Philip B Winston
~~Georgia Power~~Southern Company Transmission

John A Zipp
ITC Holdings

Index

3-month interval, ~~24~~25

aggregate, ~~24, 25~~26

alarm, ~~16,~~ 17, 18, ~~29, 30, 38~~19, 31, 32, 34

automated monitoring and alarming, ~~24~~25, 26

auto-restoration, 5

auxiliary relay, 11, 12

batteries, 12, 13, 14, 15, ~~26, 27, 31~~28, 29

battery, ~~10~~11, 12, 13, 14, 15, ~~26, 27~~16, 28, 29, ~~30~~31

broken, 7

capacity, 14, 15~~, 29, 30~~

channel performance, 18, ~~38~~19, 34

charger, 12, 13, 14

check-off, ~~15~~16

closing circuits, 5

commission, 23, 24

~~Communication Site Batteries, 15~~

communications, 7, 11, 16, 17, 18, ~~31, 38~~19, 34

communications channel, 17, 18

Communications Site Batteries, 16~~, 17~~

communications-assisted-trip, 11

component, 2, ~~5,~~ 11, ~~14, 19, 22~~15, 20, 23, ~~25~~24, 26, ~~29~~27, 28, 31, ~~32, 38~~33

continuity, ~~12,~~ 13, 14, ~~38~~33

corrective, 2, ~~5, 26~~6, 27, 28

countable events, 2, ~~25~~26, 27

current and voltage measurements, 9

data retention, ~~22~~23

DC ground, ~~15~~16

documentation, 6, ~~21~~22, 23, ~~31, 32~~24, 33

documentation method, ~~15~~16

electromechanical, 7, 10, ~~26, 38~~27, 33

electro-mechanical relays, 6

evidence, 6, 22, 23

fiber optic I/O scheme, ~~17~~18

firmware, 5, ~~25~~27

frequency-shift, ~~16~~17

~~fully monitored, 16, 21~~

guard, ~~16,~~ 17, 18

~~Level 1, 16, 17, 31, 32, 38~~

~~Level 2, 16, 17, 31, 32, 38~~

~~Level 3, 16, 17, 27, 31, 39~~

lockout relay, 11, ~~20, 38~~21, 33

maintenance correctable issue, 2, ~~38~~34

maintenance plan, 6, ~~22, 24~~23, 25

maximum allowable interval, ~~24, 26~~25, 27

microprocessor, 5, 6, 7, 9, 10, 11, 13, 14, ~~26, 29, 30, 38~~27, 31, 32, 34

Misoperations, 2, ~~25~~27

nickel-cadmium, 14, 15

ohmic, 14, 15~~, 29, 30~~

out-of-service, 7

partially monitored, ~~11, 16~~17

PBM, ~~24, 25,~~ 26, ~~27~~28, 29

performance-based maintenance, ~~25,~~ 26, 27, 28

pilot wire, ~~16~~17

PMU, ~~19~~20

power-line carrier, ~~16~~17

pressure relays, ~~11,~~ 12

protective relays, 5, 6, 7, ~~8~~9, 10, 12, 13, ~~16~~17, 18, ~~20~~21

reclosing relays, 5

Restoration, ~~5~~6

sample list of devices, ~~20~~21

segment, 2, ~~24, 25,~~ 26, 27, 29

settings, 2, 6, 7, 12, ~~22~~23

SPS, 5, 19, ~~31~~20

Table 1a, ~~2,~~ 3, ~~5, 23, 32, 38~~33

Table 1b, ~~5,~~ 11, ~~17, 32, 38~~18, 33

Table 1c, ~~2, 5, 21, 39~~22, 34

TBM, ~~22~~23

trip coil, ~~10,~~ 11, ~~29, 30, 38~~31, 32, 33

trip signal, 11, ~~17~~18

trip test, 11

tripping circuits, ~~10~~11

UFLS, ~~18,~~ 19, ~~31~~20

unintentional ground, ~~15~~16

unmonitored, ~~16, 29~~17, 30, ~~38~~31, 32, 33, 34

UVLS, ~~18,~~ 19, ~~31~~20

valve-regulated lead-acid, 15

vented lead-acid, 15, ~~29~~31

voltage and current sensing devices, 2, ~~8~~9, 10

VRLA, 14, 15

PRC-005-2

Protection System Maintenance

Draft Supplementary Reference

November 17, 2010

Prepared by the

Protection System Maintenance and Testing Standard Drafting Team

PRC-005-2

Project 2007-17

Table of Contents

1. Introduction and Summary 3
2. Need for Verifying Protection System Performance 3
2.1 Existing NERC Standards for Protection System Maintenance and Testing 3
2.2 Proposed Modification to NERC Glossary Definition 4
2.3 Applicability of New Protection System Maintenance Standards 4
2.4 Applicable Relays 4
3. Relay Product Generations 5
4. Definitions.....5
5. Time-Based Maintenance (TBM) Programs.....6
Maintenance Practices 6
5.1 Extending Time-Based Maintenance 7
6. Condition-Based Maintenance (CBM) Programs 8
7. Time-Based versus Condition-Based Maintenance 9
8. Maximum Allowable Verification Intervals 9
Maintenance Tests 9
8.1 Table of Maximum Allowable Verification Intervals 10
8.2 Retention of Records.....12
8.3 Basis for Table 1 Intervals 12
8.4 Basis for Extended Maintenance Intervals for Microprocessor Relays 13
9. Performance-Based Maintenance Process 15
9.1 Minimum Sample Size.....15
10. Overlapping the Verification of Sections of the Protection System 18
11. Monitoring by Analysis of Fault Records.....18
12. Importance of Relay Settings in Maintenance Programs.....19
13. Self-Monitoring Capabilities and Limitations 20
14. Notification of Protection System Failures.....20
15. Maintenance Activities 21
15.1 Protective Relays (Table 1-1) 21
15.3 Control circuitry associated with protective functions (Table 1-5) 22
15.4 Batteries and DC Supplies (Table 1-4) 24
15.5 Associated communications equipment (Table 1-2).....24
15.6 Alarms (Table2) 25
15.7 Examples of Evidence of Compliance 25
16. References.....27
Figures.....28
Figure 1: Typical Transmission System 28
Figure 2: Typical Generation System 29
Figure 3: Requirements Flowchart.....31
Appendix A 32
Appendix B — Protection System Maintenance Standard Drafting Team 35

This supplementary reference to PRC-005-2 borrows heavily from the technical reference by the System Protection and Control Task Force (SPCTF) Protection System Maintenance Technical Reference paper approved by the Planning Committee in September 2007. Additionally, data available from IEEE, EPRI, and maintenance programs from various generation and transmission utilities across the NERC boundaries was utilized by the Protection System Maintenance and Testing Standard Drafting Team (PSMT SDT) for PRC-005-2 (Project 2007-17) to develop this reference document..

1. Introduction and Summary

NERC currently has four reliability standards that are mandatory and enforceable in the United States and address various aspects of maintenance and testing of Protection and Control systems. These standards are:

PRC-005-1 — *Transmission and Generation Protection System Maintenance and Testing*

PRC-008-0 — *Underfrequency Load Shedding Equipment Maintenance Programs*

PRC-011-0 — *UVLS System Maintenance and Testing*

PRC-017-0 — *Special Protection System Maintenance and Testing*

While these standards require that applicable entities have a maintenance program for Protection Systems, and that these entities must be able to demonstrate they are carrying out such a program, there are no specifics regarding the technical requirements for Protection System maintenance programs. Furthermore, FERC Order 693 directed additional modifications respective to Protection System maintenance programs. This revision of PRC-005-1 combines and replaces PRC-005, PRC-008, PRC-011 and PRC-017.

2. Need for Verifying Protection System Performance

Protective relays have been described as silent sentinels, and do not generally demonstrate their performance until a fault or other power system problem requires that they operate to protect power system elements, or even the entire Bulk Electric System (BES). Lacking faults or system problems, the protection systems may not operate for extended periods. A Misoperation - a false operation of a protection system or a failure of the protection system to operate, as designed, when needed - can result in equipment damage, personnel hazards, and wide area disturbances or unnecessary customer outages. Maintenance or testing programs are used to determine the performance and availability of protection systems.

Typically, utilities have tested protection systems at fixed time intervals, unless they had some incidental evidence that a particular protection system was not behaving as expected. Testing practices vary widely across the industry. Testing has included system functionality, calibration of measuring relays, and correctness of settings. Typically, a protection system must be visited at its installation site and removed from service for this testing.

Fundamentally, a reliability standard for Protection System Maintenance and Testing requires the performance of the maintenance activities that are necessary to detect and correct plausible age and service related degradation of components such that a properly built and commissioned Protection System will continue to function as designed over its service life.

2.1 Existing NERC Standards for Protection System Maintenance and Testing

For critical BES protection functions, NERC standards have required that each utility or asset owner define a testing program. The starting point is the existing Standard PRC-005, briefly restated as follows:

Purpose: To ensure all transmission and generation Protection Systems affecting the reliability of the Bulk Electric System (BES) are maintained and tested.

PRC-005-1 is not specific on where the boundaries of the Protection Systems lie. However, the definition of Protection System in the NERC Glossary of Terms used in Reliability Standards indicates what must be included as a minimum.

Definition of *Protection System* (excerpted from the NERC Standards Glossary of Terms):

Protective relays, associated communications systems, voltage and current sensing devices, station batteries and dc control circuitry.

Applicability: Owners of generation and transmission Protection Systems.

Requirements: The owner shall have a documented maintenance program with test intervals. The owner must keep records showing that the maintenance was performed at the specified intervals.

2.2 Proposed Modification to NERC Glossary Definition

The Protection Systems Maintenance and Testing Standard Drafting Team (PSM SDT), proposes changes to the NERC glossary definition of *Protection Systems* as follows:

Protection System (modification)

- Protective relays which respond to electrical quantities,
- communications systems necessary for correct operation of protective functions,
- voltage and current sensing devices providing inputs to protective relays,
- station dc supply associated with protective functions (including station batteries, battery chargers, and non-battery-based dc supply), and
- control circuitry associated with protective functions through the trip coil(s) of the circuit breakers or other interrupting devices.

2.3 Applicability of New Protection System Maintenance Standards

The BES purpose is to transfer bulk power. The applicability language has been changed from the original PRC-005:
"*...affecting the reliability of the Bulk Electric System (BES)…*"

To the present language:
"*… and that are applied on, or are designed to provide protection for the BES."*

The drafting team intends that this Standard will not apply to "merely possible" parallel paths, (sub-transmission and distribution circuits), but rather the standard applies to any Protection System that is designed to detect a fault on the BES and take action in response to that fault. The Standard Drafting Team does not feel that Protection Systems designed to protect distribution substation equipment are included in the scope of this standard; however, this will be impacted by the Regional definitions of the BES.

2.4 Applicable Relays

The NERC Glossary definition has a Protection System including relays, dc supply, current and voltage sensing devices, dc control circuitry and associated communications circuits. The relays to which this standard applies are those relays that use measurements of voltage, current, frequency and/or phase angle and provide a trip output to trip coils, dc control circuitry or associated communications equipment. This definition extends to IEEE device # 86 (lockout relay) and IEEE device # 94 (tripping or trip-free relay) as these devices are tripping relays that respond to the trip signal of the protective relay that processed the signals from the current and voltage sensing devices.

Relays that respond to non-electrical inputs or impulses (such as, but not limited to, vibration, pressure, seismic, thermal or gas accumulation) are not included.

3. Relay Product Generations

The likelihood of failure and the ability to observe the operational state of a critical protection system, both depends on the technological generation of the relays as well as how long they have been in service. Unlike many other transmission asset groups, protection and control systems have seen dramatic technological changes spanning several generations. During the past 20 years, major functional advances are primarily due to the introduction of microprocessor technology for power system devices such as primary measuring relays, monitoring devices, control systems, and telecommunications equipment.

Modern microprocessor based relays have six significant traits that impact a maintenance strategy:

- Self monitoring capability - the processors can check themselves, peripheral circuits, and some connected substation inputs and outputs such as trip coil continuity. Most relay users are aware that these relays have self monitoring, but are not focusing on exactly what internal functions are actually being monitored. As explained further below, every element critical to the protection system must be monitored, or else verified periodically.
- Ability to capture fault records showing how the protection system responded to a fault in its zone of protection, or to a nearby fault for which it is required not to operate.
- Ability to meter currents and voltages, as well as status of connected circuit breakers, continuously during non-fault times. The relays can compute values such as MW and MVAR line flows that are sometimes used for operational purposes such as SCADA.
- Data communications via ports that provide remote access to all of the results of protection system monitoring, recording, and measurement.
- Ability to trip or close circuit breakers and switches through the protection system outputs, on command from remote data communications messages or from relay front panel button requests.
- Construction from electronic components some of which have shorter technical life or service life than electromechanical components of prior protection system generations.

4. Definitions

Protection System Maintenance Program (PSMP) — An ongoing program by which Protection System components are kept in working order and proper operation of malfunctioning components is restored. A maintenance program for a specific component includes one or more of the following activities:

- Verify — Determine that the component is functioning correctly.
- Monitor — Observe the routine in-service operation of the component.
- Test — Apply signals to a component to observe functional performance or output behavior, or to diagnose problems.
- Inspect — Detect visible signs of component failure, reduced performance and degradation.
- Calibrate — Adjust the operating threshold or measurement accuracy of a measuring element to meet the intended performance requirement.
- Restore — Return malfunctioning components to proper operation.

5. Time-Based Maintenance (TBM) Programs

Time-based maintenance is the process in which protection systems are maintained or verified according to a time schedule. The scheduled program often calls for technicians to travel to the physical site and perform a functional test on protection system components. However, some components of a TBM program may be conducted from a remote location - for example, tripping a circuit breaker by communicating a trip command to a microprocessor relay to determine if the entire protection system tripping chain is able to operate the breaker.

Maintenance Practices

Maintenance and testing programs often incorporate the following types of maintenance practices:

- TBM – time-based maintenance – externally prescribed maximum maintenance or testing intervals are applied for components or groups of components. The intervals may have been developed from prior experience or manufacturers' recommendations. The TBM verification interval is based on a variety of factors, including experience of the particular asset owner, collective experiences of several asset owners who are members of a country or regional council, etc. The maintenance intervals are fixed, and may range in number of months or in years.

  TBM can include review of recent power system events near the particular terminal. Operating records may verify that some portion of the protection system has operated correctly since the last test occurred. If specific protection scheme components have demonstrated correct performance within specifications, the maintenance test time clock can be reset for those components.

- PBM – performance-based maintenance - intervals are established based on analytical or historical results of TBM failure rates on a statistically significant population of similar components. Some level of TBM is generally followed. Statistical analyses accompanied by adjustments to maintenance intervals are used to justify continued use of PBM-developed extended intervals when test failures or in-service failures occur infrequently.

- CBM – condition-based maintenance – continuously or frequently reported results from non-disruptive self monitoring of components demonstrate operational status as those components remain in service. Whatever is verified by CBM does not require manual testing, but taking advantage of this requires precise technical focus on exactly what parts are included as part of the self diagnostics.

  Microprocessor based protective relays that perform continuous self-monitoring verify correct operation of most components within the device. Self-monitoring capabilities may include the ac signal inputs, analog measuring circuits, processors and memory for measurement, protection, and data communications, trip circuit monitoring, and protection or data communications signals. For those conditions, failure of a self-monitoring routine generates an alarm and may inhibit operation to avoid false trips. When internal components, such as critical output relay contacts, are not equipped with self-monitoring, they can be manually tested. The method of testing may be local or remote, or through inherent performance of the scheme during a system event.

The TBM is the overarching maintenance process of which the other types are subsets. Unlike TBM, PBM intervals are adjusted based on good or bad experiences. The CBM verification intervals can be hours or even milliseconds between non-disruptive self monitoring checks within or around components as they remain in service.

TBM, PBM, and CBM can be combined for individual components, or within a complete Protection System. The following diagram illustrates the relationship between various types of maintenance practices described in this section. In the Venn diagram the overlapping regions show the relationship of TBM with PBM historical information and the inherent continuous monitoring offered through CBM. This figure shows:

- Region 1: The TBM intervals that are increased based on known reported operational condition of individual components that are monitoring themselves.
- Region 2: The TBM intervals that are adjusted up or down based on results of analysis of maintenance history of statistically significant population of similar products that have been subject to TBM.
- Region 3: Optimal TBM intervals based on regions 1 and 2.

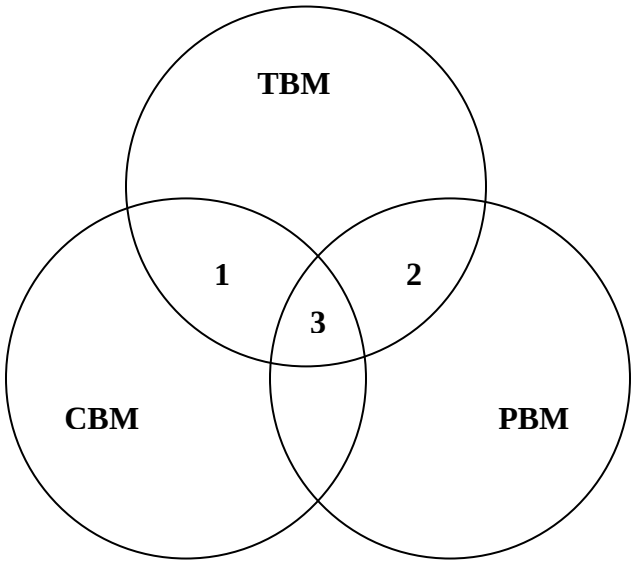

Relationship of time-based maintenance types

5.1 Extending Time-Based Maintenance

All maintenance is fundamentally time-based. Default time-based intervals are commonly established to assure proper functioning of each component of the protection system, when data on the reliability of the components is not available other than observations from time-based maintenance. The following factors may influence the established default intervals:

- If continuous indication of the functional condition of a component is available (from relay self monitoring, for example), the intervals may be extended or manual testing may be eliminated. This is referred to as condition-based maintenance or CBM. CBM is valid only for precisely the components subject to monitoring. In the case of microprocessor-based relays, self-monitoring may not include automated diagnostics of every component within a microprocessor.

- Previous maintenance history for a group of components of a common type may indicate that the maintenance intervals can be extended while still achieving the desired level of performance. This

is referred to as performance-based maintenance or PBM. It is also sometimes referred to as reliability-centered maintenance or RCM, but PBM is used in this document.

- Observed proper operation of a component may be regarded as a maintenance verification of the respective component or element in a microprocessor-based device. For such an observation, the maintenance interval may be reset only to the degree that can be verified by data available on the operation. For example, the trip of an electromechanical relay for a fault verifies the trip contact and trip path, but only through the relays in series that actually operated; one operation of this relay cannot verify correct calibration.

Excessive maintenance can actually decrease the reliability of the component or system. It is not unusual to cause failure of a component by removing it from service and restoring it. The improper application of test signals may cause failure of a component. For example, in electromechanical overcurrent relays, test currents have been known to destroy convolution springs.

In addition, maintenance usually takes the component out of service, during which time it is not able to perform its function. Cutout switch failures, or failure to restore switch position, commonly lead to protection failures.

6. Condition-Based Maintenance (CBM) Programs

Condition-based maintenance is the process of gathering and monitoring the information available from modern microprocessor-based relays and other intelligent electronic devices (IEDs) that monitor protection system elements. These relays and IEDs generate monitoring information during normal operation, and the information can be assessed at a convenient location remote from the substation. The information from these relays and IEDs is divided into two basic types:

1. Information can come from background self-monitoring processes, programmed by the manufacturer, or by the user in relay logic settings. The results are presented by alarm contacts or points, front panel indications, and by data communications messages.
2. Information can come from event logs, captured files, and/or oscillograph records for faults and disturbances, metered values, and binary input status reports. Some of these are available on the relay front panel display, but may be available via data communications ports. Large files of fault information can only be retrieved via data communications. These results comprise a mass of data that must be further analyzed for evidence of the operational condition of the protection system.

Using these two types of information, the user can develop an effective maintenance program carried out mostly from a central location remote from the substation. This approach offers the following advantages:

1. Non-invasive Maintenance: The system is kept in its normal operating state, without human intervention for checking. This reduces risk of damage, or risk of leaving the system in an inoperable state after a manual test. Experience has shown that keeping human hands away from equipment known to be working correctly enhances reliability.
2. Virtually Continuous Monitoring: CBM will report many hardware failure problems for repair within seconds or minutes of when they happen. This reduces the percentage of problems that are discovered through incorrect relaying performance. By contrast, a hardware failure discovered by TBM may have been there for much of the time interval between tests, and there is a good chance that some relays will show health problems by incorrect relaying before being caught in the next test round. The frequent or continuous nature of CBM makes the effective verification interval far shorter than any required TBM maximum interval.

7. Time-Based versus Condition-Based Maintenance

Time-based and condition-based maintenance programs are both acceptable, if implemented according to technically sound requirements. Practical programs can employ a *combination of time-based and condition-based maintenance.* The standard requirements introduce the concept of optionally using condition monitoring as a documented element of a maintenance program.

The Federal Energy Regulatory Commission (FERC), in its Order Number 693 Final Rule dated March 16, 2007 (18 CFR Part 40, Docket No. RM06-16-000) on Mandatory Reliability Standards for the Bulk-Power System, directed NERC to submit a modification to PRC-005-1 that includes a requirement that maintenance and testing of a protection system must be carried out within a maximum allowable interval that is appropriate to the type of the protection system and its impact on the reliability of the Bulk Power System. Accordingly, this Supplementary Reference Paper refers to the specific maximum allowable intervals in PRC-005-2. The defined time limits allow for longer time intervals if the maintained component is monitored.

A key feature of condition-based monitoring is that it effectively reduces the time delay between the moment of a protection failure and time the protection system owner knows about it, for the monitored segments of the protection system. In some cases, the verification is practically continuous - the time interval between verifications is minutes or seconds. Thus, technically sound, condition-based verification, meets the verification requirements of the FERC order even more effectively than the strictly time-based tests of the same system components.

The result is that:

This NERC standard permits utilities to use a technically sound approach and to take advantage of remote monitoring, data analysis, and control capabilities of modern protection systems to reduce the need for periodic site visits and invasive testing of components by on-site technicians. This periodic testing must be conducted within the maximum time intervals specified in Tables 1-1 through Tables 1-5 of PRC-005-2.

8. Maximum Allowable Verification Intervals

The Maximum Allowable Testing Intervals and Maintenance Activities show how CBM with newer relay types can reduce the need for many of the tests and site visits that older protection systems require. As explained below, there are some sections of the protection system that monitoring or data analysis may not verify. Verifying these sections of the Protection Systems requires some persistent TBM activity in the maintenance program. However, some of this TBM can be carried out remotely - for example, exercising a circuit breaker through the relay tripping circuits using the relay remote control capabilities can be used to verify function of one tripping path and proper trip coil operation, if there has been no fault or routine operation to demonstrate performance of relay tripping circuits.

Maintenance Tests

Periodic maintenance testing is performed to ensure that the protection and control system is operating correctly after a time period of field installation. These tests may be used to ensure that individual components are still operating within acceptable performance parameters - this type of test is needed for components susceptible to degraded or changing characteristics due to aging and wear. Full system performance tests may be used to confirm that the total protection system functions from measurement of power system values, to properly identifying fault characteristics, to the operation of the interrupting devices.

8.1 Table of Maximum Allowable Verification Intervals

Table 1 (collectively known as Table 1, individually called out as Tables 1-1 through 1-5), in the standard, specifies maximum allowable verification intervals for various generations of protection systems and categories of equipment that comprise protection systems. The right column indicates maintenance activities required for each category.

The types of components are illustrated in Figures 1 and 2 at the end of this paper. Figure 1 shows an example of telecommunications-assisted line protection system comprising substation equipment at each terminal and a telecommunications channel for relaying between the two substations. Figure 2 shows a typical Generation station layout. The various subsystems of a Protection System that need to be verified are shown. UFLS, UVLS, and SPS are additional categories of Table 1 that are not illustrated in these Figures. UFLS, UVLS and SPS all use identical equipment as Protection Systems in the performance of their functions and therefore have the same maintenance needs.

While it is easy to associate protective relays to multiple levels of monitoring, it is also true that most of the components that can make up a Protection System can also have technological advancements that place them into higher levels of monitoring.

To use the Maintenance Activities and Intervals Tables from PRC-005-2:

- First find the Table associated with your component. The tables are arranged in the order of mention in the definition of Protection System; Table 1-1 is for protective relays, Table 1-2 is for the associated communications systems, Table 1-3 is for current and voltage sensing devices, Table 1-4 is for station dc supply and Table 1-5 is for control circuits. There is an additional table, Table 2, which brings alarms into the maintenance arena; this was broken out to simplify the other tables.
- Next look within that table for your device and its degree of monitoring. The tables have different hands-on maintenance activities prescribed depending upon the degree to which you monitor your equipment. Find the maintenance activity that applies to the monitoring level that you have on your piece of equipment.
- This Maintenance Activity is the minimum maintenance activity that must be documented.
- If your PSMP (plan) requires <u>more activities</u> then you must perform and document to this higher standard.
- After the maintenance activity is known, check the Maximum Maintenance Interval; this time is the maximum time allowed between hands-on maintenance activity cycles of this component.
- If your PSMP (plan) requires activities <u>more often</u> than the Tables maximum then you must perform and document those activities to this higher standard.
- Any given component of a Protection System can be determined to have a degree of monitoring that may be different from another component within that same Protection System. For example, in a given Protection System it is possible for an entity to have a monitored protective relay and an unmonitored associated communications system; this combination would require hands-on maintenance activity on the relay at least once every 12 years and attention paid to the communications system as often as every 3 months.
- An entity does not have to utilize the extended time intervals made available by this use of condition-based monitoring. An easy choice to make is to simply utilize the unmonitored level of maintenance made available on each of the 5 Tables. While the maintenance activities resulting from this choice would require more maintenance man-hours, the maintenance requirements may be simpler to document and the resulting maintenance plans may be easier to create.

For each Protection System component, Table 1 shows maximum allowable testing intervals for the various degrees of monitoring. These degrees of monitoring, or levels, range from the legacy unmonitored through a system that is more comprehensively monitored.

It has been noted here that an entity may have a PSMP that is more stringent than PRC-005-2. There may be any number of reasons that an entity chooses a more stringent plan than the minimums prescribed within PRC-005-2, most notable of which is an entity using performance based maintenance methodology. (Another reason for having a more stringent plan than is required could be a regional entity could have more stringent requirements.) Regardless of the rationale behind an entity's more stringent plan, it is incumbent upon them to perform the activities, and perform them at the stated intervals, of the entity's PSMP. A quality PSMP will help assure system reliability and adhering to any given PSMP should be the goal.

Additional Notes for Tables 1-1 through 1-5

1. For electro-mechanical relays, adjustment is required to bring measurement accuracy within the tolerance needed by the asset owner. Microprocessor-relays with no remote monitoring of alarm contacts, etc, are un-monitored relays and need to be verified within the Table interval as other un-monitored relays but may be verified as functional by means other than testing by simulated inputs.
2. Microprocessor relays typically are specified by manufacturers as not requiring calibration, but acceptable measurement of power system input values must be verified (verification of the Analog to Digital [A/D] converters) within the Table intervals. The integrity of the digital inputs and outputs that are used as protective functions must be verified within the Table intervals.
3. Any Phasor Measurement Unit (PMU) function whose output is used in a protection system or SPS (as opposed to a monitoring task) must be verified as a component in a protection system.
4. In addition to verifying the circuitry that supplies dc to the protection system, the owner must maintain the station dc supply. The most widespread station dc supply is the station battery and charger. Unlike most Protection System components physical inspection of station batteries for signs of component failure, reduced performance, and degradation are required to ensure that the station battery is reliable enough to deliver dc power when required. IEEE Standards 450, 1188, and 1106 for Vented Lead-Acid, Valve-Regulated Lead-Acid, and Nickel-Cadmium batteries, respectively (which are the most commonly used substation batteries on the NERC BES) have been developed as an important reference source of maintenance recommendations. The Protection System owner might use the applicable IEEE recommended practice which contains information and recommendations concerning the maintenance, testing and replacement of its substation battery. However, the methods prescribed in these IEEE recommendations cannot be specifically required because they do not apply to all battery applications.
5. Aggregated small entities might distribute the testing of the population of UFLS/UVLS systems, and large entities will usually maintain a portion of these systems in any given year. Additionally, if relatively small quantities of such systems do not perform properly, it will not affect the integrity of the overall program. Thus these distributed systems have decreased requirements as compared to other Protection Systems.
6. Voltage & Current Sensing Device circuit input connections to the protection system relays can be verified by (but not limited to) comparison of measured values on live circuits or by using test currents and voltages on equipment out of service for maintenance. The verification process can be automated or manual. The values should be verified to be as expected, (phase value and phase relationships are both equally important to verify).

7. Verify the protection system tripping function by performing an operational trip test on all components contained in the trip circuit. This includes circuit breaker or circuit switcher trip coils, auxiliary tripping relays (94), lock-out relays (86), and communications-assisted trip scheme elements. Each control circuit path that carries trip signal must be verified, although each path must be checked only once. A maintenance program may include performing an overall test for the entire system at one time, or several split system tests with overlapping trip verification. A documented real-time trip of any given trip path is acceptable in lieu of a functional trip test.
8. "End-to-end test" as used in this supplementary reference is any testing procedure that creates a remote input to the local communications-assisted trip scheme. While this can be interpreted as a GPS-type functional test it is not limited to testing via GPS. Any remote scheme manipulation that can cause action at the local trip path can be used to functionally-test the dc Control Circuitry. A documented real-time trip of any given trip path is acceptable in lieu of a functional trip test. It is possible, with sufficient monitoring, to be able to verify each and every parallel trip path that participated in any given dc Control Circuit trip. Or, another possible solution is that a single trip path from a single monitored relay can be verified to be the trip path that successfully tripped during a real-time operation. The variations are only limited by the degree of engineering and monitoring that an entity desires to pursue.
9. A/D verification may use relay front panel value displays, or values gathered via data communications. Groupings of other measurements (such as vector summation of bus feeder currents) can be used for comparison if calibration requirements assure acceptable measurement of power system input values.
10. Notes 1-9 attempt to describe the testing activities they do not represent the only methods to achieve these activities but rather some possible methods. Technological advances, ingenuity and/or industry accepted techniques can all be used to satisfy maintenance activity requirements; the standard is technology and method neutral in most cases.

8.2 Retention of Records

PRC-005-1 describes a reporting or auditing cycle of one year and retention of records for three years. However, with a three year retention cycle, the records of verification for a protection system will typically be discarded before the next verification, leaving no record of what was done if a misoperation or failure is to be analyzed.

PRC-005-2 corrects this by requiring:

The Transmission Owner, Generator Owner, and Distribution Provider shall each retain documentation of the two most recent performances of each distinct maintenance activity for the Protection System components, or to the previous on-site audit date, whichever is longer

This requirement assures that the documentation shows that the interval between maintenance cycles correctly meets the maintenance interval limits. The requirement is actually alerting the industry to documentation requirements already implemented by audit teams. Evidence of compliance bookending the interval shows interval accomplished instead of proving only your planned interval.

8.3 Basis for Table 1 Intervals

SPCTF authors collected all available data from Regional Entities (REs) on time intervals recommended for maintenance and test programs. The recommendations vary widely in categorization of relays, defined maintenance actions, and time intervals, precluding development of intervals by averaging. SPCTF also reviewed the 2005 Report [2] of the IEEE Power System Relaying Committee Working Group I-17 (Transmission Relay System Performance Comparison). Review of the I-17 report shows data from a

small number of utilities, with no company identification or means of investigating the significance of particular results.

To develop a solid current base of practice, SPCTF surveyed its members regarding their maintenance intervals for electromechanical and microprocessor relays, and asked the members to also provide definitively-known data for other entities. The survey represented 470 GW of peak load, or 64% of the NERC peak load. Maintenance interval averages were compiled by weighting reported intervals according to the size (based on peak load) of the reporting utility. Thus, the averages more accurately represent practices for the large populations of protection systems used across the NERC regions.

The results of this survey with weighted averaging indicate maintenance intervals of 5 years for electromechanical or solid state relays, and 7 years for un-monitored microprocessor relays.

A number of utilities have extended maintenance intervals for microprocessor relays beyond 7 years, based on favorable experience with the particular products they have installed. To provide a technical basis for such extension, SPCTF authors developed a recommendation of 10 years using the Markov modeling approach from [1] as summarized in Section 8.4. The results of this modeling depend on the completeness of self-testing or monitoring. Accordingly, this extended interval is allowed by Table 1 only when such relays are monitored as specified in the attributes of monitoring contained in Tables 1-1 through 1-5 and Table 2. Monitoring is capable of reporting protection system health issues that are likely to affect performance within the 10 year time interval between verifications.

It is important to note that, according to modeling results, protection system availability barely changes as the maintenance interval is varied below the 10-year mark. Thus, reducing the maintenance interval does not improve protection system availability. With the assumptions of the model regarding how maintenance is carried out, reducing the maintenance interval actually degrades protection system availability.

8.4 Basis for Extended Maintenance Intervals for Microprocessor Relays

Table 1 allows maximum verification intervals that are extended based on monitoring level. The industry has experience with self-monitoring microprocessor relays that leads to the Table 1 value for a monitored relay as explained in Section 8.3. To develop a basis for the maximum interval for monitored relays in their *Protection System Maintenance – A Technical Reference*, the SPCTF used the methodology of Reference [1], which specifically addresses optimum routine maintenance intervals. The Markov modeling approach of [1] is judged to be valid for the design and typical failure modes of microprocessor relays.

The SPCTF authors ran test cases of the Markov model to calculate two key probability measures:

- Relay Unavailability - the probability that the relay is out of service due to failure or maintenance activity while the power system element to be protected is in service.
- Abnormal Unavailability - the probability that the relay is out of service due to failure or maintenance activity when a fault occurs, leading to failure to operate for the fault.

The parameter in the Markov model that defines self-monitoring capability is ST (for self test). ST = 0 if there is no self-monitoring; ST = 1 for full monitoring. Practical ST values are estimated to range from .75 to .95. The SPCTF simulation runs used constants in the Markov model that were the same as those used in [1] with the following exceptions:

Sn, Normal tripping operations per hour = 21600 (reciprocal of normal fault clearing time of 10 cycles)

Sb, Backup tripping operations per hour = 4320 (reciprocal of backup fault clearing time of 50 cycles)

Rc, Protected component repairs per hour = 0.125 (8 hours to restore the power system)

Rt, Relay routine tests per hour = 0.125 (8 hours to test a protection system)

Rr, Relay repairs per hour = 0.08333 (12 hours to complete a protection system repair after failure)

Experimental runs of the model showed low sensitivity of optimum maintenance interval to these parameter adjustments.

The resulting curves for Relay Unavailability and Abnormal Unavailability versus maintenance interval showed a broad minimum (optimum maintenance interval) in the vicinity of 10 years – the curve is flat, with no significant change in either unavailability value over the range of 9, 10, or 11 years. This was true even for a relay Mean Time between Failures (MTBF) of 50 years, much lower than MTBF values typically published for these relays. Also, the Markov modeling indicates that both the relay unavailability and abnormal unavailability actually become higher with more frequent testing. This shows that the time spent on these more frequent tests yields no failure discoveries that approach the negative impact of removing the relays from service and running the tests.

PSMT SDT further notes that the SPCTF also allowed 25% extensions to the "maximum time intervals". With a 5 year time interval established between manual maintenance activities and a 25% time extension then this equates to a 6.25 year maximum time interval. It is the belief of the PSMT SDT that the SPCTF understood that 6.25 years was thereby an adequate maximum time interval between manual maintenance activities. The PSMT SDT has followed the FERC directive for a *maximum* time interval and has determined that no extensions will be allowed. Six years has been set for the maximum time interval between manual maintenance activities. This maximum time interval also works well for maintenance cycles that have been in use in generator plants for decades.

For monitored relays, the PSMT SDT notes that the SPCTF called for 10 years as the interval between maintenance activities. A 10 year interval with a 25% allowed extension equates to a maximum allowed interval of 12.5 years between manual maintenance activities. The Standard does not allow extensions on any component of the protection system; thus the maximum allowed interval for these components has been set to12 years. Twelve years also fits well into the traditional maintenance cycles of both substations and generator plants.

Also of note is the Table's use of the term "Calendar" in the column for "Maximum Maintenance Interval". The PSMT SDT deemed it necessary to include the term "Calendar" to facilitate annual maintenance planning, scheduling and implementation. This need is the result of known occurrences of system requirements that could cause maintenance schedules to be missed by a few days or weeks. The PSMT SDT chose the term "Calendar" to preclude the need to have schedules be met to the day. An electro-mechanical protective relay that is maintained in year #1 need not be revisited until 6 years later (year #7). For example: a relay was maintained April 10, 2008; maintenance would need to be completed no later than December 31, 2014.
Section 9 describes a performance-based maintenance process which can be used to justify maintenance intervals other than those described in Table 1.

Section 10 describes sections of the protection system, and overlapping considerations for full verification of the protection system by segments. Segments refer to pieces of the protection system, which can range from a single device to a panel to an entire substation.

Section 11 describes how relay operating records can (but not required to) serve as a basis for verification, reducing the frequency of manual testing.

Section 13 describes how a cooperative effort of relay manufacturers and protection system users can improve the coverage of self-monitoring functions, leading to full monitoring of the bulk of the protection system, and eventual elimination of manual verification or testing.

9. Performance-Based Maintenance Process

In lieu of using the Table 1 intervals, a performance-based maintenance process may be used to establish maintenance intervals (*PRC-005 Attachment A Criteria for a Performance-Based Protection System Maintenance Program*). A performance-based maintenance process may justify longer maintenance intervals, or require shorter intervals relative to Table 1. In order to use a performance-based maintenance process, the documented maintenance program must include records of repairs, adjustments, and corrections to covered protection systems in order to provide historical justification for intervals other than those established in Table 1. Furthermore, the asset owner must regularly analyze these records of corrective actions to develop a ranking of causes. Recurrent problems are to be highlighted, and remedial action plans are to be documented to mitigate or eliminate recurrent problems.

Utilities with performance-based maintenance track performance of protection systems, demonstrate how they analyze findings of performance failures and aberrations, and implement continuous improvement actions. Since no maintenance program can ever guarantee that no malfunction can possibly occur, documentation of a performance-based maintenance program would serve the utility well in explaining to regulators and the public a misoperation leading to a major system outage event.

A performance-based maintenance program requires auditing processes like those included in widely used industrial quality systems (such as ***ISO 9001-2000, Quality management systems — Requirements;*** or applicable parts of the NIST Baldridge National Quality Program). The audits periodically evaluate:

- The completeness of the documented maintenance process
- Organizational knowledge of and adherence to the process
- Performance metrics and documentation of results
- Remediation of issues
- Demonstration of continuous improvement.

In order to opt into a Performance-based Maintenance (PBM) program the asset owner must first sort the various Protection System components into population segments. Any population segment must be comprised of at least 60 individual units; if any asset owner opts for PBM but does not own 60 units to comprise a population then that asset owner may combine data from other asset owners until the needed 60 units is aggregated. Each population segment must be composed of a grouping of Protection Systems or components of a consistent design standard or particular model or type from a single manufacturer and subjected to similar environmental factors. For example: One segment cannot be comprised of both GE & Westinghouse electro-mechanical lock-out relays; likewise, one segment cannot be comprised of 60 GE lock-out relays, 30 of which are in a dirty environment and the remaining 30 from a clean environment. This PBM process cannot be applied to batteries but can be applied to all other components of a Protection System including (but not limited to) specific battery chargers, instrument transformers, trip coils and/or control circuitry (etc.).

9.1 Minimum Sample Size

Large Sample Size

An assumption that needs to be made when choosing a sample size is “the sampling distribution of the sample mean can be approximated by a normal probability distribution.” The Central Limit Theorem

states: "In selecting simple random samples of size *n* from a population, the sampling distribution of the sample mean *x* can be approximated by a normal probability distribution as the sample size becomes large." (Essentials of Statistics for Business and Economics, Anderson, Sweeney, Williams, 2003)

To use the Central Limit Theorem in statistics, the population size should be large. The references below are supplied to help define what is large.

> "… whenever we are using a large simple random sample (rule of thumb: n>=30), the central limit theorem enables us to conclude that the sampling distribution of the sample mean can be approximated by a normal distribution." (Essentials of Statistics for Business and Economics, Anderson, Sweeney, Williams, 2003)
>
> "If samples of size n, when n>=30, are drawn from any population with a mean *u* and a standard deviation σ, the sampling distribution of sample means approximates a normal distribution. The greater the sample size, the better the approximation." (Elementary Statistics - Picturing the World, Larson, Farber, 2003)
>
> "The sample size is large (generally n>=30)… (Introduction to Statistics and Data Analysis - Second Edition, Peck, Olson, Devore, 2005)
>
> "… the normal is often used as an approximation to the *t* distribution in a test of a null hypothesis about the mean of a normally distributed population when the population variance is estimated from a relatively large sample. A sample size exceeding 30 is often given as a minimal size in this connection." (Statistical Analysis for Business Decisions, Peters, Summers, 1968)

Error of Distribution Formula

Beyond the large sample size discussion above, a sample size requirement can be estimated using the bound on the Error of Distribution Formula when the expected result is of a "Pass/Fail" format and will be between 0 and 1.0.

The Error of Distribution Formula is:

$$B = z\sqrt{\frac{\pi(1-\pi)}{n}}$$

Where:
B = bound on the error of distribution (allowable error)
z = standard error
π = expected failure rate
n = sample size required

Solving for n provides:

$$n = \pi(1-\pi)\left(\frac{z}{B}\right)^2$$

Minimum Population Size to use Performance-based Program

One entity's population of components should be large enough to represent a sizeable sample of a vendor's overall population of manufactured devices. For this reason the following assumptions are made:

B = 5%
z = 1.96 (This equates to a 95% confidence level)
π = 4%

Using the equation above, n=59.0.

Minimum Sample Size to evaluate Performance-based Program

The number of components that should be included in a sample size for evaluation of the appropriate testing interval can be smaller because a lower confidence level is acceptable since the sample testing is repeated or updated annually. For this reason, the following assumptions are made:

B = 5%
z = 1.44 (85% confidence level)
π = 4%

Using the equation above, n=31.8.

Recommendation

Based on the above discussion, a sample size should be at least 30 to allow use of the equation mentioned. Using this and the results of the equation, the following numbers are recommended (and required within the standard):

Minimum Population Size to use Performance-based Maintenance Program = 60

Minimum Sample Size to evaluate Performance-based Program = 30.

Once the population segment is defined then maintenance must begin within the intervals as outlined for the device described in the Tables (Table 1-1 through Table 1-5). Time intervals can be lengthened provided the last year's worth of components tested (or the last 30 units maintained, whichever is more) had fewer than 4% countable events. It is notable that 4% is specifically chosen because an entity with a small population (60 units) would have to adjust its time intervals between maintenance if more than 1 countable event was found to have occurred during the last analysis period. A smaller percentage would require that entity to adjust the time interval between maintenance activities if even one unit is found out of tolerance or causes a Misoperation.

The minimum number of units that can be tested in any given year is 5% of the population. Note that this 5% threshold sets a practical limitation on total length of time between intervals at 20 years.

If at any time the number of countable events equals or exceeds 4% of the last year's tested components (or the last 30 units maintained, whichever is more) then the time period between manual maintenance activities must be decreased. There is a time limit on reaching the decreased time at which the countable events is less than 4%; this must be attained within three years.

This additional time period of three years to restore segment performance to <4% countable events is mandated to keep entities from "gaming the PBM system". It is believed that this requirement provides the economic disincentives to discourage asset owners from arbitrarily pushing the PBM time intervals out to up to 20 years without proper statistical data.

10. Overlapping the Verification of Sections of the Protection System

Tables 1-1 through 1-5 require that every protection system component be periodically verified. One approach is to test the entire protection scheme as a unit, from the secondary windings of voltage and current sources to breaker tripping. For practical ongoing verification, sections of the protection system may be tested or monitored individually. The boundaries of the verified sections must overlap to ensure that there are no gaps in the verification. See Appendix A of this Supplementary Reference for additional discussion on this topic.

All of the methodologies expressed within this report may be combined by an entity, as appropriate, to establish and operate a maintenance program. For example, a protection system may be divided into multiple overlapping sections with a different maintenance methodology for each section:

- Time-based maintenance with appropriate maximum verification intervals for categories of equipment as given in the Tables 1-1 through 1-5;
- Full monitoring as described in Tables 1-1 through 1-5;
- A performance-based maintenance program as described in Section 9 above or Attachment A of the Standard;
- Opportunistic verification using analysis of fault records as described in Section 11

11. Monitoring by Analysis of Fault Records

Many users of microprocessor relays retrieve fault event records and oscillographic records by data communications after a fault. They analyze the data closely if there has been an apparent misoperation, as NERC standards require. Some advanced users have commissioned automatic fault record processing systems that gather and archive the data. They search for evidence of component failures or setting problems hidden behind an operation whose overall outcome seems to be correct. The relay data may be augmented with independently captured digital fault recorder (DFR) data retrieved for the same event.

Fault data analysis comprises a legitimate CBM program that is capable of reducing the need for a manual time-interval based check on protection systems whose operations are analyzed. Even electromechanical protection systems instrumented with DFR channels may achieve some CBM benefit. The completeness of the verification then depends on the number and variety of faults in the vicinity of the relay that produce relay response records, and the specific data captured.

A typical fault record will verify particular parts of certain protection systems in the vicinity of the fault. For a given protection system installation, it may or may not be possible to gather within a reasonable amount of time an ensemble of internal and external fault records that completely verify the protection system.

For example, fault records may verify that the particular relays that tripped are able to trip via the control circuit path that was specifically used to clear that fault. A relay or DFR record may indicate correct operation of the protection communications channel. Furthermore, other nearby protection systems may verify that they restrain from tripping for a fault just outside their respective zones of protection. The ensemble of internal fault and nearby external fault event data can verify major portions of the protection system, and reset the time clock for the Table 1 testing intervals for the verified components only.

What can be shown from the records of one operation is very specific and limited. In a panel with multiple relays, only the specific relay(s) whose operation can be observed without ambiguity in the record and the associated wiring paths are verified. Be careful about using fault response data to verify that settings or calibration are correct. Unless records have been captured for multiple faults close to either side of a setting boundary, setting or calibration could still be incorrect.
If fault record data is used to show that portions or all of a protection system have been verified to meet Table 1 requirements, the owner must retain the fault records used, and the maintenance related conclusions drawn from this data and used to defer Table 1 tests, for at least the retention time interval given in Section 8.2.

12. Importance of Relay Settings in Maintenance Programs

In manual testing programs, many utilities depend on pickup value or zone boundary tests to show that the relays have correct settings and calibration. Microprocessor relays, by contrast, provide the means for continuously monitoring measurement accuracy. Furthermore, the relay digitizes inputs from one set of signals to perform all measurement functions in a single self-monitoring microprocessor system. These relays do not require testing or calibration of each setting.

However, incorrect settings may be a bigger risk with microprocessor relays than with older relays. Some microprocessor relays have hundreds or thousands of settings, many of which are critical to protection system performance.

Monitoring does not check measuring element settings. Analysis of fault records may or may not reveal setting problems. To minimize risk of setting errors after commissioning, the user should enforce strict settings data base management, with reconfirmation (manual or automatic) that the installed settings are correct whenever maintenance activity might have changed them. For background and guidance, see [5].

Table 1 requires that settings must be verified to be as specified. The reason for this requirement is simple. With legacy relays (non-microprocessor protective relays) it is necessary to know the value of the intended setting in order to test, adjust and calibrate the relay. Proving that the relay works per specified setting was the de facto procedure. However, with the advanced microprocessor relays it is possible to change relay settings for the purpose of verifying specific functions and then neglect to return the settings to the specified values. While there is no specific requirement to maintain a settings management process there remains a need to verify that the settings left in the relay are the intended, specified settings. This need may manifest itself after any of the following:

- One or more settings are changed for any reason.
- A relay fails and is repaired or replaced with another unit.
- A relay is upgraded with a new firmware version.

13. Self-Monitoring Capabilities and Limitations

Microprocessor relay proponents have cited the self-monitoring capabilities of these products for nearly 20 years. Theoretically, any element that is monitored does not need a periodic manual test. A problem today is that the community of manufacturers and users has not created clear documentation of exactly what is and is not monitored. Some unmonitored but critical elements are buried in installed systems that are described as self-monitoring.

Until users are able to document how all parts of a system which are required for the protective functions are monitored or verified (with help from manufacturers), they must continue with the unmonitored or partially monitored intervals established in Table 1.

Going forward, manufacturers and users can develop mappings of the monitoring within relays, and monitoring coverage by the relay of user circuits connected to the relay terminals.

To enable the use of full monitoring, the manufacturers of the microprocessor-based self-monitoring components in the protection system should publish for the user a document or map that shows:

- How all internal elements of the product are monitored for any failure that could impact protection system performance.
- Which connected circuits are monitored by checks implemented within the product; how to connect and set the product to assure monitoring of these connected circuits; and what circuits or potential problems are not monitored.

With this information in hand, the user can document full monitoring for some or all sections by:

- Presenting or referencing the product manufacturer's documents.
- Explaining in a system design document the mapping of how every component and circuit that is critical to protection is monitored by the microprocessor product(s) or by other design features.
- Extending the monitoring to include the alarm transmission facilities through which failures are reported within a given time frame to allocate where action can be taken to initiate resolution of the alarm attributed to a maintenance correctable issue, so that failures of monitoring or alarming systems also lead to alarms and action.
- Documenting the plans for verification of any unmonitored components according to the requirements of Table 1.

14. Notification of Protection System Failures

When a failure occurs in a protection system, power system security may be compromised, and notification of the failure must be conducted in accordance with relevant NERC standard(s). Knowledge of the failure may impact the system operator's decisions on acceptable loading conditions.

This formal reporting of the failure and repair status to the system operator by the protection system owner also encourages the system owner to execute repairs as rapidly as possible. In some cases, a microprocessor relay or carrier set can be replaced in hours; wiring termination failures may be repaired in a similar time frame. On the other hand, a component in an electromechanical or early-generation electronic relay may be difficult to find and may hold up repair for weeks. In some situations, the owner may have to resort to a temporary protection panel, or complete panel replacement.

15. Maintenance Activities

Some specific maintenance activities are a requirement to ensure reliability. An example would be that a BES entity could be prudent in its protective relay maintenance but if its battery maintenance program is lacking then reliability could still suffer. The NERC glossary outlines a Protection System as containing specific components. PRC-005-02 requires specific maintenance activities be accomplished within a specific time interval. As noted previously, higher technology equipment can contain integral monitoring capability that actually performs maintenance verification activities routinely and often; therefore *manual intervention* to perform certain activities on these type components may not be needed.

15.1 Protective Relays (Table 1-1)

These relays are defined as the devices that receive the input signal from the current and voltage sensing devices and are used to isolate a faulted portion of the BES. Devices that sense thermal, vibration, seismic, pressure, gas or any other non-electrical inputs are excluded.

Non-microprocessor based equipment is treated differently than microprocessor based equipment in the following ways, the relays should meet the asset owners' tolerances.

- Non-microprocessor devices must be tested with voltage and/or current applied to the device.
- Microprocessor devices may be tested through the integral testing of the device.
    - There is no specific protective relay commissioning test or relay routine test mandated.
    - There is no specific documentation mandated.

15.2 Voltage & Current Sensing Devices (Table 1-3)

These are the current and voltage sensing devices, usually known as instrument transformers. There is presently a technology available (fiber-optic Hall-effect) that does not utilize conventional transformer technology; these devices and other technologies that produce quantities that represent the primary values of voltage and current are considered to be a type of voltage and current sensing devices included in this standard.

The intent of the maintenance activity is to verify the input to the protective relay from the device that produces the current or voltage signal sample.

There is no specific test mandated for these components. The important thing about these signals is to know that the expected output from these components actually reaches the protective relay. Therefore, the proof of the proper operation of these components also demonstrates the integrity of the wiring (or other medium used to convey the signal) from the current and voltage sensing device all the way to the protective relay. The following observations apply.

- There is no specific ratio test, routine test or commissioning test mandated.
- There is no specific documentation mandated.
- It is required that the signal be present at the relay.
- This expectation can be arrived at from any of a number of means; by calculation, by comparison to other circuits, by commissioning tests, by thorough inspection, or by any means needed to verify the circuit meets the asset owner's protection system maintenance program.
- An example of testing might be a saturation test of a CT with the test values applied at the relay panel; this therefore tests the CT as well as the wiring from the relay all the back to the CT.
- Another possible test is to measure the signal from the voltage and/or current sensing devices, during load conditions, at the input to the relay.

- Another example of testing the various voltage and/or current sensing devices is to query the microprocessor relay for the real-time loading; this can then be compared to other devices to verify the quantities applied to this relay. Since the input devices have supplied the proper values to the protective relay then the verification activity has been satisfied. Thus event reports (and oscillographs) can be used to verify that the voltage and current sensing devices are performing satisfactorily.
- Still another method is to measure total watts and vars around the entire bus; this should add up to zero watts and zero vars thus proving the voltage and/or current sensing devices system throughout the bus.
- Another method for proving the voltage and/or current sensing devices is to complete commissioning tests on all of the transformers, cabling, fuses and wiring.
- Any other methods that provide documentation that the expected transformer values as applied to the inputs to the protective relays are acceptable.

15.3 Control circuitry associated with protective functions (Table 1-5)

This component of Protection Systems includes the trip coil(s) of the circuit breaker, circuit switcher or any other interrupting device. It includes the wiring from the batteries to the relays. It includes the wiring (or other signal conveyance) from every trip output to every trip coil. It includes any device needed for the correct processing of the needed trip signal to the trip coil of the interrupting device; this requirement is meant to capture inputs and outputs to and from a protective relay that are necessary for the correct operation of the protective functions. In short, every trip path must be verified and every I/O path must be verified; the method of verification is optional to the asset owner. An example of testing methods to accomplish this might be to verify, with a volt-meter, the existence of the proper voltage at the open contacts, the open circuited input circuit and at the trip coil(s). As every parallel trip path has similar failure modes, each trip path from relay to trip coil must be verified. Each trip coil must be tested to trip the circuit breaker (or other interrupting device) at least once. There is a requirement to operate the circuit breaker (or other interrupting device) at least once every six years as part of the complete functional test. If a suitable monitoring system is installed that verifies every parallel trip path then the manual-intervention testing of those parallel trip paths can be extended beyond twelve years, however the actual operation of the circuit breaker must still occur at least once every six years. This 6-year tripping requirement can be completed as easily as tracking the real-time fault-clearing operations on the circuit breaker or tracking the trip coil(s) operation(s) during circuit breaker routine maintenance actions

The circuit-interrupting device should not be confused with a motor-operated disconnect. The intent of this standard is to require maintenance intervals and activities on Protection Systems equipment and not just all equipment.

It is necessary, however, to classify a device that actuates a high-speed auto-closing ground switch as an interrupting device if this ground switch is utilized in a Protection System and forces a ground fault to occur that then results in an expected Protection System operation to clear the forced ground fault. The SDT believes that this is essentially a transferred-tripping device without the use of communications equipment. If this high-speed ground switch is "…applied on, or designed to provide protection for the BES…" then this device needs to be treated as any other Protection System component. The control circuitry would have to be tested within 12 years and any electromechanically operated device will have to be tested every 6 years. If the spring-operated ground switch can be disconnected from the solenoid triggering unit then the solenoid triggering unit can easily be tested without the actual closing of the ground blade.

Circuit breakers that participate in a distributed UFLS or UVLS scheme are excluded from the tripping requirement, but not from the circuit test requirements; since the circuitry must be tested at least once every 12 years and the circuit interrupting device need not be tested then this effectively makes this a 12

year requirement. There are many circuit interrupting devices in the distribution system that will be operating for any given under-frequency event that requires tripping for that event. A failure in the tripping-action of a single distributed system circuit breaker will be far less significant than, for example, any single Transmission Protection System failure such as a failure of a Bus Differential Lock-Out Relay. While many failures of these distributed system circuit breakers could add up to be significant, it is also believed that many circuit breakers are operated often on just fault clearing duty and therefore these circuit breakers are operated at least as frequently as any requirements that appear in this standard.

The dc control circuitry also includes each auxiliary tripping relay (94) and each lock-out relay (86) that may exist in any particular trip scheme. If these devices are electro-mechanical components then they must be trip tested. The PSMT SDT considers these components to share some similarities in failure modes as electro-mechanical protective relays; as such there is a six year maximum interval between mandated maintenance tasks unless PBM is applied.

When verifying the operation of the 94 and 86 relays each normally-open contact that closes to pass a trip signal must be verified as operating correctly. Normally-open contacts that are not used to pass a trip signal and normally-closed contacts do not have to be verified. Verification of the tripping paths is the requirement.
New technology is also accommodated here; there are some tripping systems that have replaced the traditional hard-wired trip circuitry with other methods of trip-signal conveyance such as fiber-optics. It is the intent of the PSMT SDT to include this, and any other, technology that is used to convey a trip signal from a protective relay to a circuit breaker (or other interrupting device) within this category of equipment.

15.4 Batteries and DC Supplies (Table 1-4)

IEEE guidelines were consulted to arrive at the maintenance activities for batteries. The following guidelines were used: IEEE 450 (for Vented Lead-Acid batteries), IEEE 1188 (for Valve-Regulated Lead-Acid batteries) and IEEE 1106 (for Nickel-Cadmium batteries).

The currently proposed NERC definition of a Protection System is

- Protective relays which respond to electrical quantities,
- communications systems necessary for correct operation of protective functions,
- voltage and current sensing devices providing inputs to protective relays,
- station dc supply associated with protective functions (including station batteries, battery chargers, and non-battery-based dc supply), and
- control circuitry associated with protective functions through the trip coil(s) of the circuit breakers or other interrupting devices." The station battery is not the only component that provides dc power to a Protection System. In the new definition for Protection System "station batteries" are replaced with "station dc supply" to make the battery charger and dc producing stored energy devices (that are not a battery) part of the Protection System that must be maintained.

The PSMT SDT recognizes that there are several technological advances in equipment and testing procedures that allow the owner to choose how to verify that a battery string is free of open circuits. The term "continuity" was introduced into the standard to allow the owner to choose how to verify continuity of a battery set by various methods, and not to limit the owner to the two methods recommended in the IEEE standards. Continuity as used in Table 1-4 of the standard refers to verifying that there is a continuous current path from the positive terminal of the station battery set to the negative terminal. Without verifying continuity of a station battery, there is no way to determine that the station battery is available to supply dc power to the station. An open battery string will be an unavailable power source in the event of loss of the battery charger.

Batteries cannot be a unique population segment of a Performance-based Maintenance Program (PBM) because there are too many variables in the electro-chemical process to completely isolate all of the performance-changing criteria necessary for using PBM on battery systems. However, nothing precludes the use of a PBM process for any other part of a dc supply besides the batteries themselves.

15.5 Associated communications equipment (Table 1-2)

The equipment used for tripping in a communications assisted trip scheme is a vital piece of the trip circuit. Remote action causing a local trip can be thought of as another parallel trip path to the trip coil that must be tested.

Besides the trip output and wiring to the trip coil(s) there is also a communications medium that must be maintained.

Newer technologies now exist that achieve communications-assisted tripping without the conventional wiring practices of older technology.

For example: older technologies may have included *Frequency Shift Key* methods. This technology requires that guard and trip levels be maintained.

The actual tripping path(s) to the trip coil(s) may be tested as a parallel trip path within the dc control circuitry tests.

Emerging technologies transfer digital information over a variety of carrier mediums that are then interpreted locally as trip signals.

The requirements apply to the communicated signal needed for the proper operation of the protective relay trip logic or scheme. Therefore this standard is applied to equipment used to convey both trip signals (permissive or direct) and block signals.

It was the intent of this standard to require that a test be made of any communications-assisted trip scheme regardless of the vintage of the technology. The essential element is that the tripping (or blocking) occurs locally when the remote action has been asserted; or that the tripping (or blocking) occurs remotely when the local action is asserted.

Any evidence of operational test or documentation of measurement of signal level, reflected power or data-error rates can fulfill the requirements.

Some newer installations utilize digital signals over fiber-optics from the protective relays in the control house to the circuit interrupting device in the yard. This method of tripping the circuit breaker, even though it might be considered communications, must be maintained per the dc control circuitry maintenance requirements.

15.6 Alarms (Table 2)

In addition to the tables of maintenance for the components of a Protection System, there is an additional table added for alarms. This additional table was added for clarity. This enabled the common alarm attributes to be consolidated into a single spot and thus make it easier to read the Tables 1-1 through 1-5. The alarms need to arrive at a site wherein a corrective action can be initiated. This could be a control room, operations center, etc. The alarming mechanism can be a standard alarming system or an auto-polling system, the only requirement is that the alarm be brought to the action-site within 24 hours. This effectively makes manned-stations equivalent to monitored stations. The alarm of a monitored point (for example a monitored trip path with a lamp) in a manned-station now makes that monitored point eligible for monitored status. Obviously, these same rules apply to a non-manned-station, which is that if the monitored point has an alarm that is auto-reported to the operations center (for example) within 24 hours then it too is considered monitored.

15.7 Examples of Evidence of Compliance

To comply with the requirements of this Standard an entity will have to document and save evidence. The evidence can be of many different forms. The Standard Drafting Team recognizes that there are concurrent evidence requirements of other standards that could, at times fulfill evidence requirements of this standard.

For example: maintaining evidence for operation of Special Protection Systems could concurrently be utilized as proof of the operation of the associated trip coil (provided one can be certain of the trip coil involved). Thus the reporting requirements that one may have to do for the mis-operation of a Special Protection Scheme under PRC-016 could work for the activity tracking requirements under this PRC-005-2.

Another example might be:

Some entities maintain records of all interruptions. These records can be concurrently utilized, if the entity desires, as DC Trip Path verifications.

Analysis of Event Recordings can provide details that can eliminate some hands-on maintenance activities; merely printing out the event report provides limited benefit of verification of specific maintenance items.

Standardized-forms, hard or soft copy, can be created, filled out and archived. These forms can be of the entities' design and can be aimed at answering the specific requirements of the Standard as well as additional requirements as needed by the entity.

Fill-in blanks, check-boxes, drop-down lists, auto-date formats, etc. can all be used as the primary action is the maintenance activity time interval; other techniques can be used to verify that the maintenance activity was performed, such as test reports.

Other evidence of compliance might be, but is not limited to:

Prints, maintenance plans, training materials, policies, procedures, data print-outs or exhibits, correspondence, reports, data-base records, etc.

There is the legacy method of paper trail for everything, this is acceptable. There are also paperless systems existing and evolving that are also acceptable.

Proof of compliance should simply be the entities' records of maintenance completed.

16. References

NERC/SPCTF/Relay_Maintenance_Tech_Ref_approved_by_PC.pdf

1. "Predicating The Optimum Routine test Interval For Protection Relays," by J. J. Kumm, M.S. Weber, D. Hou, and E. O. Schweitzer, III, IEEE Transactions on Power Delivery, Vol. 10, No. 2, April 1995.
2. "Transmission Relay System Performance Comparison For 2000, 2001, 2002, 2003, 2004 and 2005," Working Group I17 of Power System Relaying Committee of IEEE Power Engineering Society, May 2006.
3. "A Survey of Relaying Test Practices," Special Report by WG I11 of Power System Relaying Committee of IEEE Power Engineering Society, September 16, 1999.
4. "Transmission Protective Relay System Performance Measuring Methodology," Working Group I3 of Power System Relaying Committee of IEEE Power Engineering Society, January 2002.
5. "Processes, Issues, Trends and Quality Control of Relay Settings," Working Group C3 of Power System Relaying Committee of IEEE Power Engineering Society, December 2006.
6. "Proposed Statistical Performance Measures for Microprocessor-Based Transmission-Line Protective Relays, Part I - Explanation of the Statistics, and Part II - Collection and Uses of Data," Working Group D5 of Power System Relaying Committee of IEEE Power Engineering Society, May 1995; Papers 96WM 016-6 PWRD and 96WM 127-1 PWRD, 1996 IEEE Power Engineering Society Winter Meeting.
7. "Analysis And Guidelines For Testing Numerical Protection Schemes," Final Report of CIGRE WG 34.10, August 2000.
8. "Use of Preventative Maintenance and System Performance Data to Optimize Scheduled Maintenance Intervals," H. Anderson, R. Loughlin, and J. Zipp, Georgia Tech Protective Relay Conference, May 1996.

PSMT SDT References

9. "Essentials of Statistics for Business and Economics" Anderson, Sweeney, Williams, 2003
10. "Introduction to Statistics and Data Analysis" - Second Edition, Peck, Olson, Devore, 2005
11. "Statistical Analysis for Business Decisions" Peters, Summers, 1968

Figures

Figure 1: Typical Transmission System

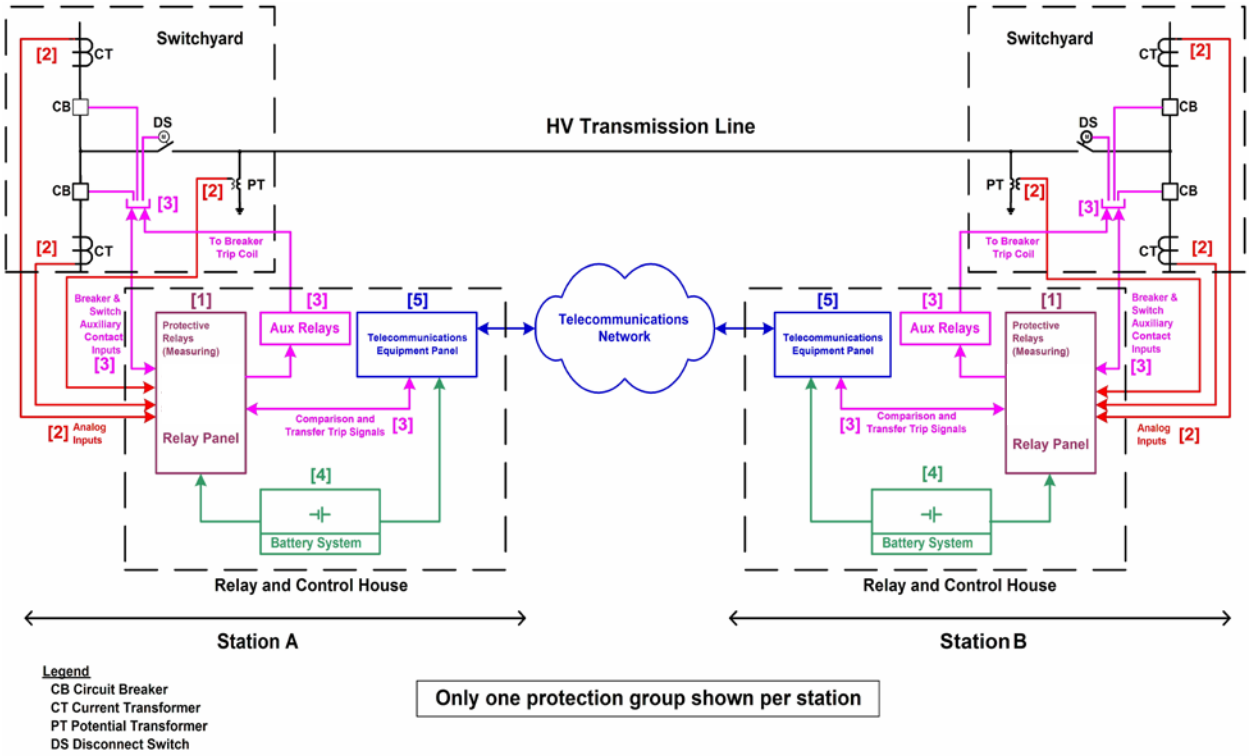

For information on components, see ***Figure 1 & 2 Legend – Components of Protection Systems***

(Return)

Figure 2: Typical Generation System

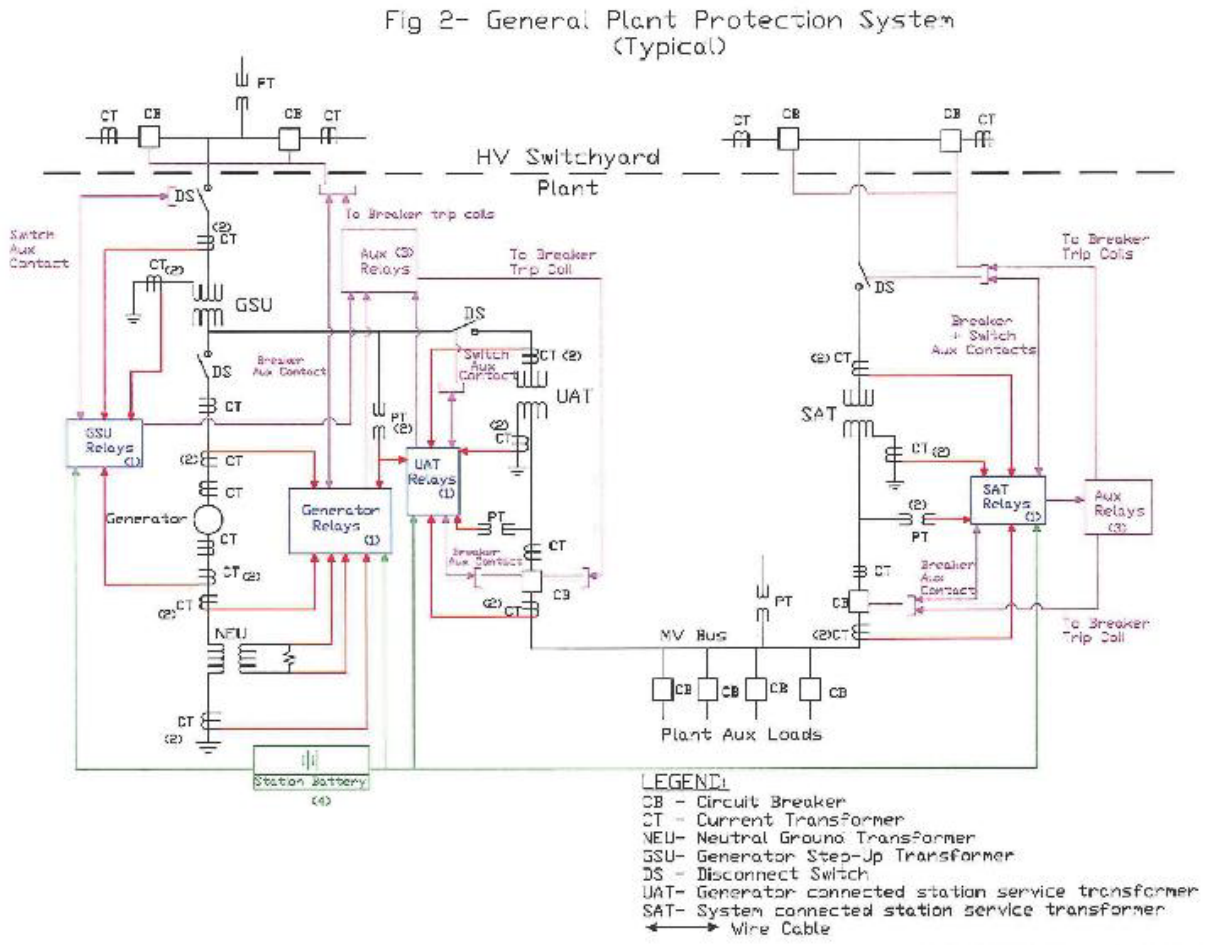

For information on components, see ***Figure 1 & 2 Legend – Components of Protection Systems***

(Return)

Figure 1 & 2 Legend – Components of Protection Systems

Number in Figure	Component of Protection System	Includes	Excludes
1	Protective relays which respond to electrical quantities	All protective relays that use current and/or voltage inputs from current & voltage sensors and that trip the 86, 94 or trip coil.	Devices that use non-electrical methods of operation including thermal, pressure, gas accumulation, and vibration. Any ancillary equipment not specified in the definition of Protection systems. Control and/or monitoring equipment that is not a part of the automatic tripping action of the Protection System
2	Voltage and current sensing devices providing inputs to protective relays	The signals from the voltage & current sensing devices to the protective relay input.	Voltage & current sensing devices that are not a part of the Protection System, including sync-check systems, metering systems and data acquisition systems.
3	control circuitry associated with protective functions	All control wiring (or other medium for conveying trip signals) associated with the tripping action of 86 devices, 94 devices or trip coils (from all parallel trip paths). This would include fiber-optic systems that carry a trip signal as well as hard-wired systems that carry trip current.	Closing circuits, SCADA circuits
4	Station dc supply	Batteries and battery chargers and any control power system which has the function of supplying power to the protective relays, associated trip circuits and trip coils.	Any power supplies that are not used to power protective relays or their associated trip circuits and trip coils.
5	Communications systems necessary for correct operation of protective functions	Tele-protection equipment used to convey specific information, in the form of analog or digital signals, necessary for the correct operation of protective functions.	Any communications equipment that is not used to convey information necessary for the correct operation of protective functions.

(Return)

Figure 3: Requirements Flowchart

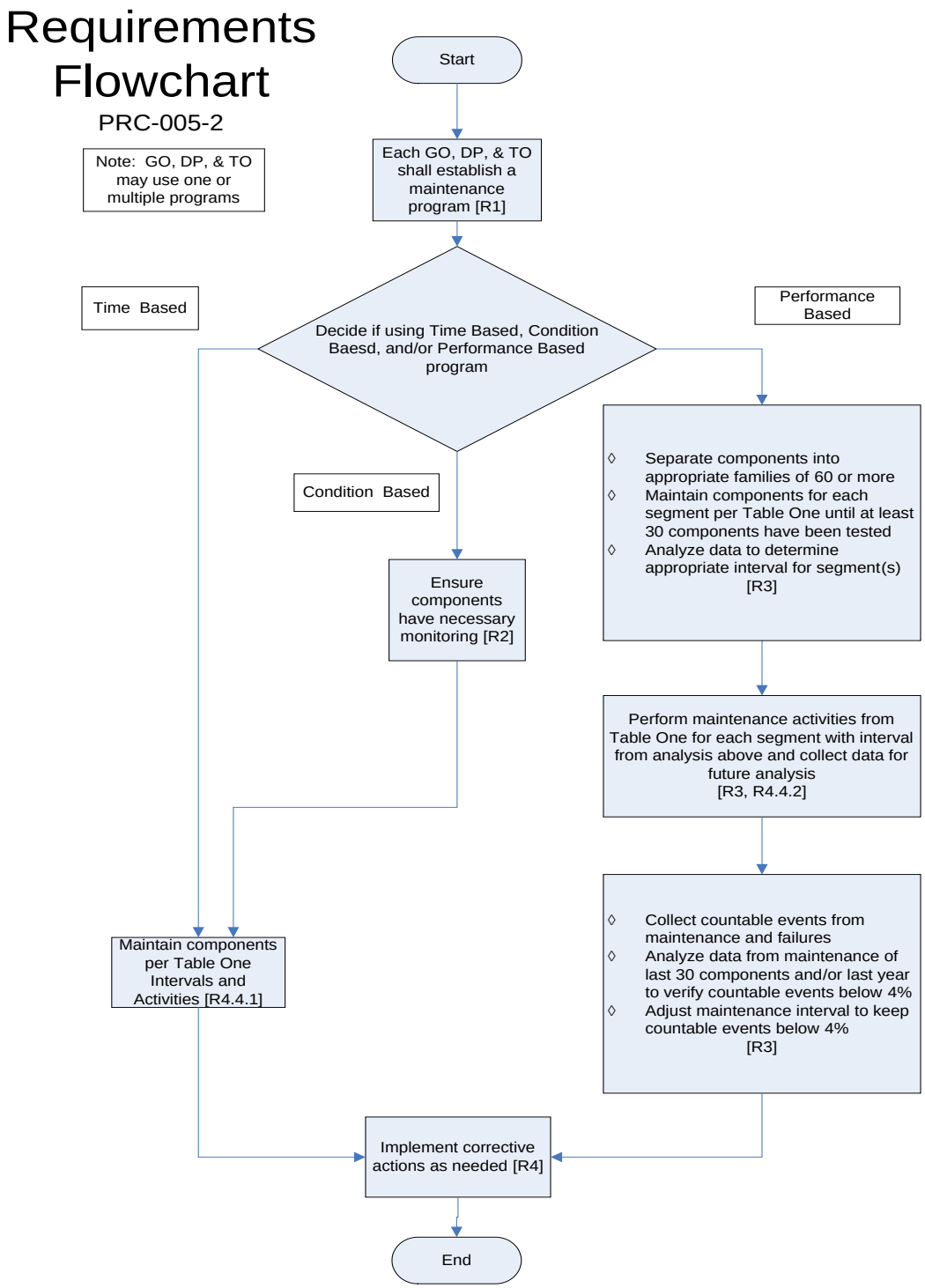

Appendix A

The following illustrates the concept of overlapping verifications and tests as summarized in Section 10 of the paper. As an example, Figure A-1 shows protection for a critical transmission line by carrier blocking directional comparison pilot relaying. The goal is to verify the ability of the entire two-terminal pilot protection scheme to protect for line faults, and to avoid over-tripping for faults external to the transmission line zone of protection bounded by the current transformer locations.

Figure A-1

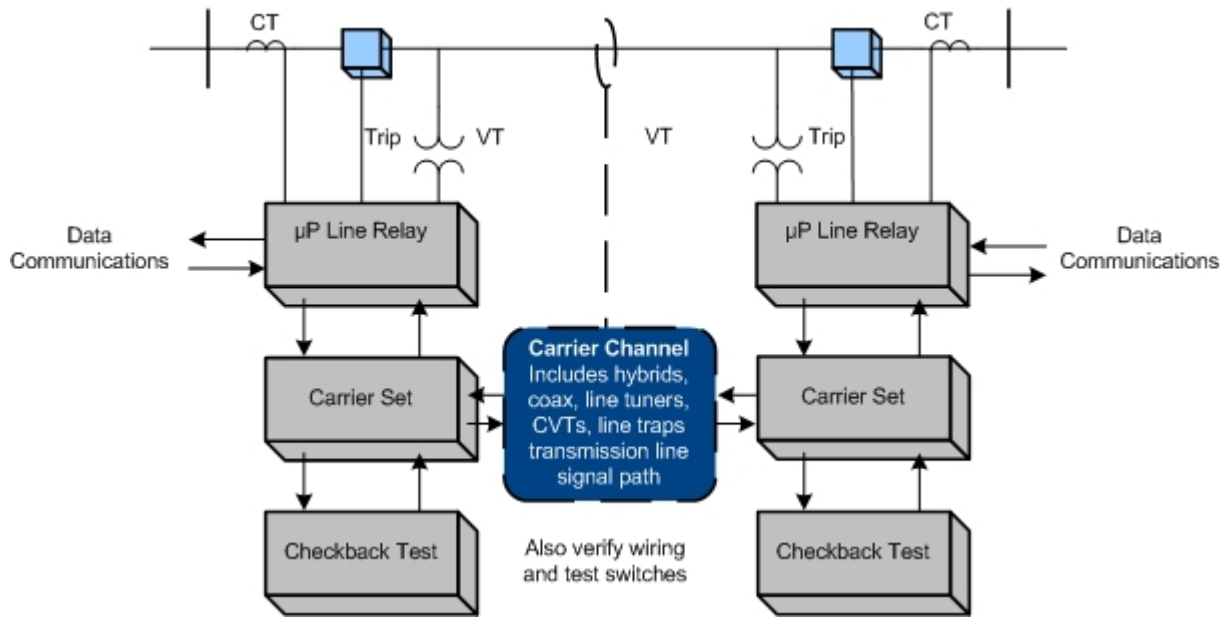

In this example (Figure A1), verification takes advantage of the self-monitoring features of microprocessor multifunction line relays at each end of the line. For each of the line relays themselves, the example assumes that the user has the following arrangements in place:

1. The relay has a data communications port that can be accessed from remote locations.
2. The relay has internal self-monitoring programs and functions that report failures of internal electronics, via communications messages or alarm contacts to SCADA.
3. The relays report loss of dc power, and the relays themselves or external monitors report the state of the dc battery supply.
4. The CT and PT inputs to the relays are used for continuous calculation of metered values of volts, amperes, plus Watts and VARs on the line. These metered values are reported by data communications. For maintenance, the user elects to compare these readings to those of other relays, meters, or DFRs. The other readings may be from redundant relaying or measurement systems or they may be derived from values in other protection zones. Comparison with other such readings to within required relaying accuracy verifies Voltage & Current Sensing

Devices, wiring, and analog signal input processing of the relays. One effective way to do this is to utilize the relay metered values directly in SCADA, where they can be compared with other references or state estimator values.

5. Breaker status indication from auxiliary contacts is verified in the same way as in (2). Status indications must be consistent with the flow or absence of current.
6. Continuity of the breaker trip circuit from dc bus through the trip coil is monitored by the relay and reported via communications.
7. Correct operation of the on-off carrier channel is also critical to security of the protection system, so each carrier set has a connected or integrated automatic checkback test unit. The automatic checkback test runs several times a day. Newer carrier sets with integrated checkback testing check for received signal level and report abnormal channel attenuation or noise, even if the problem is not severe enough to completely disable the channel.

These monitoring activities plus the check-back test comprise automatic verification of all the protection system elements that experience tells us are the most prone to fail. But, does this comprise a complete verification?

Figure A-2

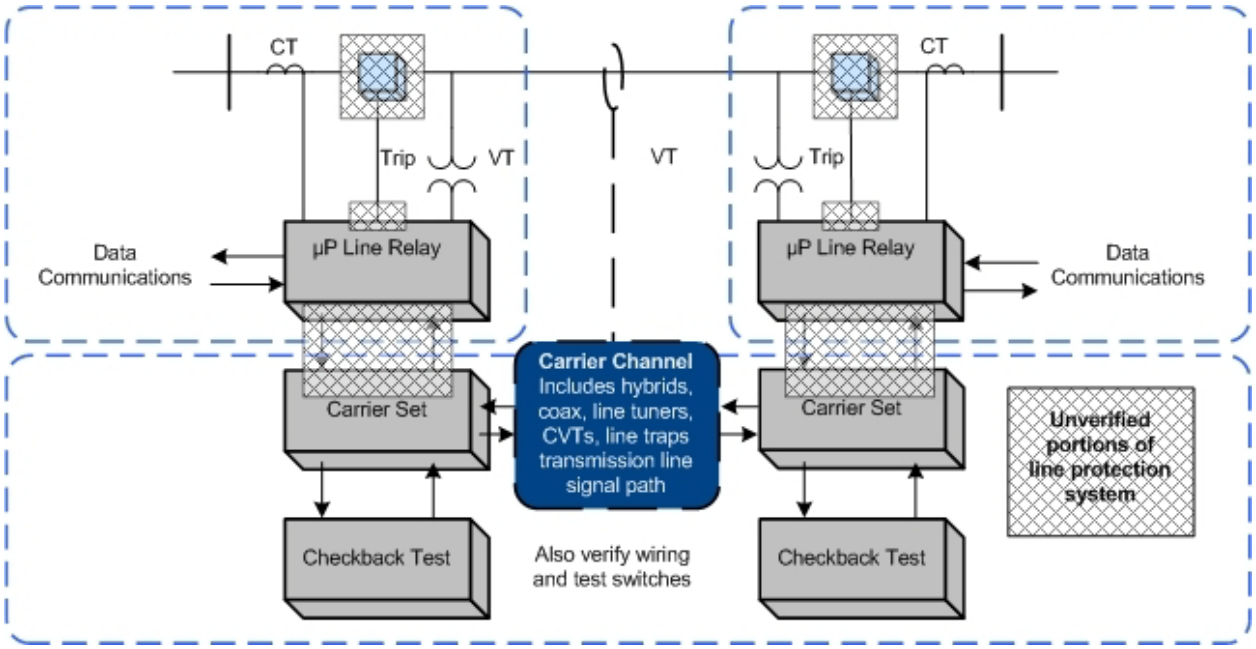

The dotted boxes of Figure A-2 show the sections of verification defined by the monitoring and verification practices just listed. These sections are not completely overlapping, and the shaded regions show elements that are not verified:

1. The continuity of trip coils is verified, but no means is provided for validating the ability of the circuit breaker to trip if the trip coil should be energized.

2. Within each line relay, all the microprocessors that participate in the trip decision have been verified by internal monitoring. However, the trip circuit is actually energized by the contacts of a small telephone-type "ice cube" relay within the line protective relay. The microprocessor energizes the coil of this ice cube relay through its output data port and a transistor driver circuit. There is no monitoring of the output port, driver circuit, ice cube relay, or contacts of that relay. These components are critical for tripping the circuit breaker for a fault.
3. The check-back test of the carrier channel does not verify the connections between the relaying microprocessor internal decision programs and the carrier transmitter keying circuit or the carrier receiver output state. These connections include microprocessor I/O ports, electronic driver circuits, wiring, and sometimes telephone-type auxiliary relays.
4. The correct states of breaker and disconnect switch auxiliary contacts are monitored, but this does not confirm that the state change indication is correct when the breaker or switch opens.

A practical solution for (1) and (2) is to observe actual breaker tripping, with a specified maximum time interval between trip tests. Clearing of naturally-occurring faults are demonstrations of operation that reset the time interval clock for testing of each breaker tripped in this way. If faults do not occur, manual tripping of the breaker through the relay trip output via data communications to the relay microprocessor meets the requirement for periodic testing.

PRC-005 does not address breaker maintenance, and its protection system test requirements can be met by energizing the trip circuit in a test mode (breaker disconnected) through the relay microprocessor. This can be done via a front-panel button command to the relay logic, or application of a simulated fault with a relay test set. However, utilities have found that breakers often show problems during protection system tests. It is recommended that protection system verification include periodic testing of the actual tripping of connected circuit breakers.

Testing of the relay-carrier set interface in (3) requires that each relay key its transmitter, and that the other relay demonstrate reception of that blocking carrier. This can be observed from relay or DFR records during naturally occurring faults, or by a manual test. If the checkback test sequence were incorporated in the relay logic, the carrier sets and carrier channel are then included in the overlapping segments monitored by the two relays, and the monitoring gap is completely eliminated.

Appendix B — Protection System Maintenance Standard Drafting Team

Charles W. Rogers
Chairman
Consumers Energy Co.

John B. Anderson
Xcel Energy

Merle E. Ashton
Tri-State G&T

Bob Bentert
Florida Power & Light Company

John Ciufo
Hydro One Inc

Sam Francis
Oncor

Carol A Gerou
Midwest Reliability Organization

William Shultz
Southern Company Generation

Russell C Hardison
Tennessee Valley Authority

David Harper
NRG Texas Maintenance Services

Mark Lukas
ComEd

Al McMeekin
NERC Staff
North American Electric Reliability Corporation

Mark Peterson
Great River Energy

Leonard Swanson, Jr
National Grid USA

Eric A Udren
Quanta Technology

Philip B Winston
Southern Company Transmission

John A Zipp
ITC Holdings

PRC-005-2

Protection System Maintenance

Draft Supplementary Reference

~~May 27~~November 17, 2010

Prepared by the

Protection System Maintenance and Testing Standard Drafting Team

PRC-005-2

Project 2007-17

Table of Contents

1. Introduction and Summary 3
2. Need for Verifying Protection System Performance 3
2.1 Existing NERC Standards for Protection System Maintenance and Testing 3
2.2 Proposed Modification to NERC Glossary Definition 4
2.3 Applicability of New Protection System Maintenance Standards 4
2.4 Applicable Relays 4
3. Relay Product Generations 5
4. Definitions.....5
5. Time-Based Maintenance (TBM) Programs.....6
Maintenance Practices 6
5.1 Extending Time-Based Maintenance 8
6. Condition-Based Maintenance (CBM) Programs 8
7. Time-Based versus Condition-Based Maintenance 9
8. Maximum Allowable Verification Intervals 9
Maintenance Tests 10
8.1 Table of Maximum Allowable Verification Intervals 10
~~Level 1 Monitoring (Unmonitored) Table 1a~~ .....8.2 Retention of Records 13
~~Level 2 Monitoring (Partially Monitored)~~8.3 Basis for Table ~~1b~~1 Intervals.....14
~~Level 3 Monitoring (Fully Monitored) Table 1c~~8.4 Basis for Extended Maintenance Intervals for Microprocesso
~~8.2 Retention of Records~~.....9. Performance-Based Maintenance Process 16
~~8.3 Basis for Table 1 Intervals~~ .....9.1 Minimum Sample Size 17
~~8.4 Basis for Extended Maintenance Intervals for Microprocessor Relays~~10. Overlapping the Verification of Sec
~~9. Performance-Based Maintenance Process~~ .....11. Monitoring by Analysis of Fault Records 19
~~9.1 Minimum Sample Size~~.....12. Importance of Relay Settings in Maintenance Programs 20
~~10. Overlapping the Verification of Sections of the Protection System~~13. Self-Monitoring Capabilities and Limi
~~11. Monitoring by Analysis of Fault Records~~.....14. Notification of Protection System Failures 21
~~12. Importance of Relay Settings in~~15. Maintenance ~~Programs~~Activities 22
~~13. Self-Monitoring Capabilities and Limitations~~ .....15.1 Protective Relays (Table 1-1) 22
~~14. Notification of Protection System Failures~~15.3 Control circuitry associated with protective functions (Table
~~15. Maintenance Activities~~ .....15.4 Batteries and DC Supplies (Table 1-4) 25
~~15.1 Protective Relays~~ .....15.5 Associated communications equipment (Table 1-2) 25
~~15.2 Voltage & Current Sensing Devices~~.....15.6 Alarms (Table2) 26
~~15.3 DC Control Circuitry~~ .....15.7 Examples of Evidence of Compliance 26
~~15.4 Batteries and DC Supplies~~ .....16. References 28
~~15.5 Tele-protection equipment~~ .....Figures 29
~~15.6 Examples of Evidence of Compliance~~.....Figure 1: Typical Transmission System 29
~~16. References~~.....Figure 2: Typical Generation System 30
~~Figures~~.....Figure 3: Requirements Flowchart 32
~~Figure 1: Typical Transmission System~~ .....Appendix A 33
~~Figure 2: Typical Generation System~~Appendix B — Protection System Maintenance Standard Drafting Team
~~Figure 3: Requirements Flowchart~~.....32
~~Appendix A~~.....33
~~Appendix B — Protection System Maintenance Standard Drafting Team~~ 36

This supplementary reference to PRC-005-2 borrows heavily from the technical reference by the System Protection and Control Task Force (SPCTF) (Protection System Maintenance Technical Reference paper approved by the Planning Committee in September 2007). Additionally, data available from IEEE, EPRI, and maintenance programs from various generation and transmission utilities across the NERC boundaries was utilized by the Protection System Maintenance and Testing Standard Drafting Team (PSMTSDTPSMT SDT) for PRC-005-2 (Project 2007-17) utilized maintenance program data from various generation and transmission utilities across the NERC boundaries; as well as data from IEEE and EPRI.to develop this reference document..

1. Introduction and Summary

NERC currently has four reliability standards that are mandatory and enforceable in the United States and address various aspects of maintenance and testing of Protection and Control systems. These standards are:

PRC-005-1 — *Transmission and Generation Protection System Maintenance and Testing*

PRC-008-0 — *Underfrequency Load Shedding Equipment Maintenance Programs*

PRC-011-0 — *UVLS System Maintenance and Testing*

PRC-017-0 — *Special Protection System Maintenance and Testing*

While these standards require that applicable entities have a maintenance program for Protection Systems, and that these entities must be able to demonstrate they are carrying out such a program, there are no specifics regarding the technical requirements for Protection System maintenance programs. Furthermore, FERC Order 693 directed additional modifications respective to Protection System maintenance programs. This revision of PRC-005-1 combines and replaces PRC-005, PRC-008, PRC-011 and PRC-017.

2. Need for Verifying Protection System Performance

Protective relays have been described as silent sentinels, and do not generally demonstrate their performance until a fault or other power system problem requires that they operate to protect power system elements, or even the entire Bulk Electric System (BES). Lacking faults or system problems, the protection systems may not operate for extended periods. A Misoperation - a false operation of a protection system or a failure of the protection system to operate, as designed, when needed - can result in equipment damage, personnel hazards, and wide area disturbances or unnecessary customer outages. A maintenance Maintenance or testing program isprograms are used to determine the performance and availability of protection systems.

Typically, utilities have tested protection systems at fixed time intervals, unless they had some incidental evidence that a particular protection system was not behaving as expected. Testing practices vary widely across the industry. Testing has included system functionality, calibration of measuring relays, and correctness of settings. Typically, a protection system must be visited at its installation site and removed from service for this testing.

Fundamentally, a reliability standard for Protection System Maintenance and Testing requires the performance of the maintenance activities that are necessary to detect and correct plausible age and service related degradation of components such that a properly built and commissioned Protection System will continue to function as designed over its service life.

2.1 Existing NERC Standards for Protection System Maintenance and Testing

For critical BES protection functions, NERC standards have required that each utility or asset owner define a testing program. The starting point is the existing Standard PRC-005, briefly restated as follows:

Purpose: To ensure all transmission and generation Protection Systems affecting the reliability of the Bulk Electric System (BES) are maintained and tested.

PRC-005-1 is not specific on where the boundaries of the Protection Systems lie. However, the definition of Protection System in the NERC Glossary of Terms used in Reliability Standards indicates what must be included as a minimum.

Definition of *Protection System* (excerpted from the NERC Standards Glossary of Terms):

Protective relays, associated ~~communication~~communications systems, voltage and current sensing devices, station batteries and dc control circuitry.

Applicability: Owners of generation and transmission Protection Systems.

Requirements: The owner shall have a documented maintenance program with test intervals. The owner must keep records showing that the maintenance was performed at the specified intervals.

2.2 Proposed Modification to NERC Glossary Definition

The Protection Systems Maintenance and Testing Standard Drafting Team (PSM SDT), proposes changes to the NERC glossary definition of *Protection Systems* as follows:

Protection System (modification)

- ~~–~~Protective relays~~, communication~~ which respond to electrical quantities,
- communications systems necessary for correct operation of protective functions,
- voltage and current sensing devices providing inputs to protective relays~~ and associated circuitry from the voltage and current sensing devices,~~ ,
- station ~~DC~~dc supply~~, and control circuitry,~~ associated with protective functions ~~from the~~(including station ~~DC~~batteries, battery chargers, and non-battery-based dc supply), and
- control circuitry associated with protective functions through the trip coil(s) of the circuit breakers or other interrupting devices.

2.3 Applicability of New Protection System Maintenance Standards

The BES purpose is to transfer bulk power. The applicability language has been changed from the original PRC-005:
"...affecting the reliability of the Bulk Electric System (BES)…"

To the present language:
"… and that are applied on, or are designed to provide protection for the BES."

The drafting team intends that this Standard will not apply to "merely possible" parallel paths, (sub-transmission and distribution circuits), but rather the standard applies to any Protection System that is designed to detect a fault on the BES and take action in response to that fault. The Standard Drafting Team does not feel that Protection Systems designed to protect distribution substation equipment are included in the scope of this standard; however, this will be impacted by the Regional definitions of the BES.

2.4 Applicable Relays

The NERC Glossary definition has a Protection System including relays, dc supply, current and voltage sensing devices, dc control circuitry and associated communications circuits. The relays to which this standard applies are those relays that use measurements of voltage, current, frequency and/or phase angle and provide a trip output to trip coils, dc control circuitry or associated communications equipment. This

definition extends to IEEE device # 86 (lockout relay) and IEEE device # 94 (tripping or trip-free relay) as these devices are tripping relays that respond to the trip signal of the protective relay that processed the signals from the current and voltage sensing devices.

Relays that respond to non-electrical inputs or impulses (such as, but not limited to, vibration, pressure, seismic, thermal or gas accumulation) are not included.

3. Relay Product Generations

The likelihood of failure and the ability to observe the operational state of a critical protection system, both depends on the technological generation of the relays as well as how long they have been in service. Unlike many other transmission asset groups, protection and control systems have seen dramatic technological changes spanning several generations. During the past 20 years, major functional advances are primarily due to the introduction of microprocessor technology for power system devices such as primary measuring relays, monitoring devices, control systems, and telecommunications equipment.

Modern microprocessor based relays have six significant traits that impact a maintenance strategy:

- Self monitoring capability - the processors can check themselves, peripheral circuits, and some connected substation inputs and outputs such as trip coil continuity. Most relay users are aware that these relays have self monitoring, but are not focusing on exactly what internal functions are actually being monitored. As explained further below, every element critical to the protection system must be monitored, or else verified periodically.
- Ability to capture fault records showing how the protection system responded to a fault in its zone of protection, or to a nearby fault for which it is required not to operate.
- Ability to meter currents and voltages, as well as status of connected circuit breakers, continuously during non-fault times. The relays can compute values such as MW and MVAR line flows that are sometimes used for operational purposes such as SCADA.
- Data communications via ports that provide remote access to all of the results of protection system monitoring, recording, and measurement.
- Ability to trip or close circuit breakers and switches through the protection system outputs, on command from remote data communications messages or from relay front panel button requests.
- Construction from electronic components some of which have shorter technical life or service life than electromechanical components of prior protection system generations.

4. Definitions

Protection System Maintenance Program (PSMP) ~~—~~ An ongoing program by which Protection System components are kept in working order and proper operation of malfunctioning components is restored. A maintenance program for a specific component includes one or more of the following activities:

~~An ongoing program by which Protection System components are kept in working order and where malfunction components are restored to working order~~

- ~~**Verification** – A means of determining~~Verify — Determine that the component is functioning correctly.
- ~~**Monitoring** – Observation of~~Monitor — Observe the routine in-service operation of the component.

- ~~**Testing** – Application of~~Test — Apply signals to a component to observe functional performance or output behavior, or to diagnose problems.
- ~~**Inspection** – To detect~~Inspect — Detect visible signs of component failure, reduced performance and degradation.
- ~~**Calibration** – Adjustment of~~Calibrate — Adjust the operating threshold or measurement accuracy of a measuring element to meet the intended performance requirement.

- ~~**Upkeep** – Routine activities necessary to assure that the component remains in good working order and implementation of any manufacturer's hardware and software service advisories which are relevant to the application of the device.~~

  - ~~**Restoration** – The actions to restore proper operation of~~Restore — Return malfunctioning components~~.~~ to proper operation.

5. Time-Based Maintenance (TBM) Programs

Time-based maintenance is the process in which protection systems are maintained or verified according to a time schedule. The scheduled program often calls for technicians to travel to the physical site and perform a functional test on protection system components. However, some components of a TBM program may be conducted from a remote location - for example, tripping a circuit breaker by communicating a trip command to a microprocessor relay to determine if the entire protection system tripping chain is able to operate the breaker.

Maintenance Practices

Maintenance and testing programs often incorporate the following types of maintenance practices:

- TBM – time-based maintenance – externally prescribed maximum maintenance or testing intervals are applied for components or groups of components. The intervals may have been developed from prior experience or manufacturers' recommendations. The TBM verification interval is based on a variety of factors, including experience of the particular asset owner, collective experiences of several asset owners who are members of a country or regional council, etc. The maintenance intervals are fixed, and may range in number of months or in years.

  TBM can include review of recent power system events near the particular terminal. Operating records may verify that some portion of the protection system has operated correctly since the last test occurred. If specific protection scheme components have demonstrated correct performance within specifications, the maintenance test time clock ~~is~~can be reset for those components.

- PBM – performance-based maintenance - intervals are established based on analytical or historical results of TBM failure rates on a statistically significant population of similar components. Some level of TBM is generally followed. Statistical analyses accompanied by adjustments to maintenance intervals are used to justify continued use of PBM-developed extended intervals when test failures or in-service failures occur infrequently.

- CBM – condition-based maintenance – continuously or frequently reported results from non-disruptive self monitoring of components demonstrate operational status as those components remain in service. Whatever is verified by CBM does not require manual testing, but taking advantage of this requires precise technical focus on exactly what parts are included as part of the self diagnostics.

Microprocessor based protective relays that perform continuous self-monitoring verify correct operation of most components within the device. Self-monitoring capabilities may include the ac signal inputs, analog measuring circuits, processors and memory for measurement, protection, and data communications, trip circuit monitoring, and protection or data communications signals. For those conditions, failure of a self-monitoring routine generates an alarm and may inhibit operation to avoid false trips. When internal components, such as critical output relay contacts, are not equipped with self-monitoring, they can be manually tested. The method of testing may be local or remote, or through inherent performance of the scheme during a system event.

The TBM is the overarching maintenance process of which the other types are subsets. Unlike TBM, PBM intervals are adjusted based on good or bad experiences. The CBM verification intervals can be hours or even milliseconds between non-disruptive self monitoring checks within or around components as they remain in service.

TBM, PBM, and CBM can be combined for individual components, or within a complete Protection System. The following diagram illustrates the relationship between various types of maintenance practices described in this section. In the Venn diagram the overlapping regions show the relationship of TBM with PBM historical information and the inherent continuous monitoring offered through CBM. This figure shows:

- Region 1: The TBM intervals that are increased based on known reported operational condition of individual components that are monitoring themselves.
- Region 2: The TBM intervals that are adjusted up or down based on results of analysis of maintenance history of statistically significant population of similar products that have been subject to TBM.
- Region 3: Optimal TBM intervals based on regions 1 and 2.

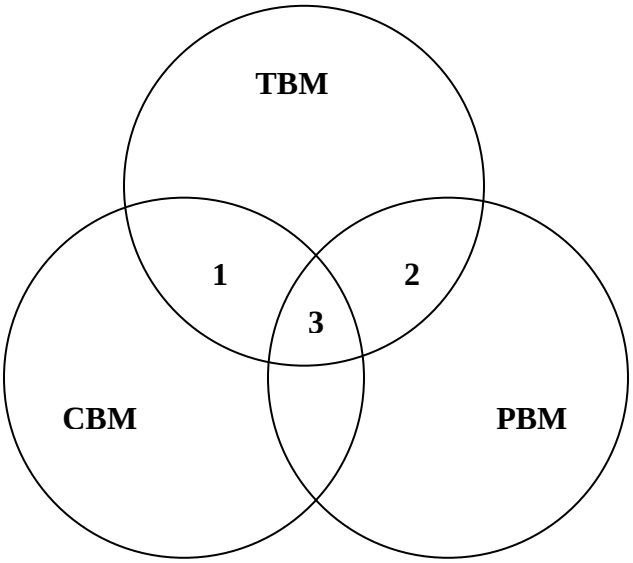

Relationship of time-based maintenance types

5.1 Extending Time-Based Maintenance

All maintenance is fundamentally time-based. Default time-based intervals are commonly established to assure proper functioning of each component of the protection system, when data on the reliability of the components is not available other than observations from time-based maintenance. The following factors may influence the established default intervals:

- If continuous indication of the functional condition of a component is available (from relay self monitoring, for example), the intervals may be extended or manual testing may be eliminated. This is referred to as condition-based maintenance or CBM. CBM is valid only for precisely the components subject to monitoring. In the case of microprocessor-based relays, self-monitoring may not include automated diagnostics of every component within a microprocessor.
- Previous maintenance history for a group of components of a common type may indicate that the maintenance intervals can be extended while still achieving the desired level of performance. This is referred to as performance-based maintenance or PBM. It is also sometimes referred to as reliability-centered maintenance or RCM, but PBM is used in this document.
- Observed proper operation of a component may be regarded as a maintenance verification of the respective component or element in a microprocessor-based device. For such an observation, the maintenance interval may be reset only to the degree that can be verified by data available on the operation. For example, the trip of an electromechanical relay for a fault verifies the trip contact and trip path, but only through the relays in series that actually operated; one operation of this relay cannot verify correct calibration.

Excessive maintenance can actually decrease the reliability of the component or system. It is not unusual to cause failure of a component by removing it from service and restoring it. The improper application of test signals may cause failure of a component. For example, in electromechanical overcurrent relays, test currents have been known to destroy convolution springs.

In addition, maintenance usually takes the component out of service, during which time it is not able to perform its function. Cutout switch failures, or failure to restore switch position, commonly lead to protection failures.

6. Condition-Based Maintenance (CBM) Programs

Condition-based maintenance is the process of gathering and monitoring the information available from modern microprocessor-based relays and other intelligent electronic devices (IEDs) that monitor protection system elements. These relays and IEDs generate monitoring information during normal operation, and the information can be assessed at a convenient location remote from the substation. The information from these relays and IEDs is divided into two basic types:

1. Information can come from background self-monitoring processes, programmed by the manufacturer, or by the user in relay logic settings. The results are presented by alarm contacts or points, front panel indications, and by data communications messages.
2. Information can come from event logs, captured files, and/or oscillograph records for faults and disturbances, metered values, and binary input status reports. Some of these are available on the relay front panel display, but may be available via data communications ports. Large files of fault information can only be retrieved via data communications. These results comprise a mass of data that must be further analyzed for evidence of the operational condition of the protection system.

Using these two types of information, the user can develop an effective maintenance program carried out mostly from a central location remote from the substation. This approach offers the following advantages:

1. Non-invasive Maintenance: The system is kept in its normal operating state, without human intervention for checking. This reduces risk of damage, or risk of leaving the system in an inoperable state after a manual test. Experience has shown that keeping human hands away from equipment known to be working correctly enhances reliability.
2. Virtually Continuous Monitoring: CBM will report many hardware failure problems for repair within seconds or minutes of when they happen. This reduces the percentage of problems that are discovered through incorrect relaying performance. By contrast, a hardware failure discovered by TBM may have been there for much of the time interval between tests, and there is a good chance that some relays will show health problems by incorrect relaying before being caught in the next test round. The frequent or continuous nature of CBM makes the effective verification interval far shorter than any required TBM maximum interval.

7. Time-Based versus Condition-Based Maintenance

Time-based and condition-based maintenance programs are both acceptable, if implemented according to technically sound requirements. Practical programs can employ a *combination of time-based and condition-based maintenance.* The standard requirements introduce the concept of optionally using condition monitoring as a documented element of a maintenance program.

The Federal Energy Regulatory Commission (FERC), in its Order Number 693 Final Rule dated March 16, 2007 (18 CFR Part 40, Docket No. RM06-16-000) on Mandatory Reliability Standards for the Bulk-Power System, directed NERC to submit a modification to PRC-005-1 that includes a requirement that maintenance and testing of a protection system must be carried out within a maximum allowable interval that is appropriate to the type of the protection system and its impact on the reliability of the Bulk Power System. Accordingly, this Supplementary Reference Paper refers to the specific maximum allowable intervals in PRC-005-2. The defined time limits allow for longer time intervals if the maintained ~~device~~component is monitored.

A key feature of condition-based monitoring is that it effectively reduces the time delay between the moment of a protection failure and time the protection system owner knows about it, for the monitored segments of the protection system. In some cases, the verification is practically continuous - the time interval between verifications is minutes or seconds. Thus, technically sound, condition-based verification ~~(as specified in the header and the "Monitoring Attributes" column of Tables 1b and 1c of PRC-005-2),~~, meets the verification requirements of the FERC order even more effectively than the strictly time-based tests of the same system ~~elements as contained in Table 1a~~components.

The result is that:

This NERC ~~standards~~standard permits utilities to use a technically sound approach and to take advantage of remote monitoring, data analysis, and control capabilities of modern protection systems to reduce the need for periodic site visits and invasive testing of components by on-site technicians. This periodic testing must be conducted within the maximum time intervals specified in Tables ~~1a, 1b and 1c~~1-1 through Tables 1-5 of PRC-005-2.

8. Maximum Allowable Verification Intervals

The Maximum Allowable Testing Intervals and Maintenance Activities ~~requirements~~ show how CBM with newer relay types can reduce the need for many of the tests and site visits that older protection systems require. As explained below, there are some sections of the protection system that monitoring or data analysis may not verify. Verifying these sections of the Protection Systems requires some persistent

TBM activity in the maintenance program. However, some of this TBM can be carried out remotely - for example, exercising a circuit breaker through the relay tripping circuits using the relay remote control capabilities can be used to verify function of one tripping path and proper trip coil operation, if there has been no fault or routine operation to demonstrate performance of relay tripping circuits.

Maintenance Tests

Periodic maintenance testing is performed to ensure that the protection and control system is operating correctly after a time period of field installation. These tests may be used to ensure that individual components are still operating within acceptable performance parameters - this type of test is needed for components susceptible to degraded or changing characteristics due to aging and wear. Full system performance tests may be used to confirm that the total protection system functions from measurement of power system values, to properly identifying fault characteristics, to the operation of the interrupting devices.

8.1 Table of Maximum Allowable Verification Intervals

Table 1~~,~~ (collectively known as Table 1, individually called out as Tables 1-1 through 1-5), in the standard, specifies maximum allowable verification intervals for various generations of protection systems and categories of equipment that comprise protection systems. The right column indicates maintenance activities required for each category.

The types of components are illustrated in Figures 1 and 2 at the end of this paper. Figure 1 shows an example of telecommunications-assisted line protection system comprising substation equipment at each terminal and a telecommunications channel for relaying between the two substations. Figure 2 shows a typical Generation station layout. The various subsystems of a Protection System that need to be verified are shown. UFLS, UVLS, and SPS are additional categories of Table 1 that are not illustrated in these Figures. UFLS, UVLS and SPS all use identical equipment as Protection Systems in the performance of their functions and therefore have the same maintenance needs.

While it is easy to associate protective relays to ~~the three~~multiple levels of monitoring, it is also true that most of the components that can make up a Protection System can also have technological advancements that place them into higher levels of monitoring.

To use the Maintenance Activities and Intervals Tables ~~(Tables 1a, 1b and 1c collectively *Tables*)~~ from PRC-005-2:

- ~~First check the table header description to verify that your equipment meets the monitoring requirements. If your equipment does not meet the monitoring requirements of Table 1c then check Table 1b. If your equipment does not meet the requirements of Table 1b then use Table 1a.~~
- ~~If you find a piece of equipment that meets the monitoring requirements of Table 1b or 1c then you can take advantage of the extended time intervals allowed by Table 1b and 1c. Your maintenance plan must document that this component can be maintained by the requirements of Table 1b or 1c because it has the necessary attributes required within that Table.~~
- ~~Once you determine which table applies to your equipment's monitoring requirements then check the Maintenance Activity that is required for that particular component.~~ First find the Table associated with your component. The tables are arranged in the order of mention in the definition of Protection System; Table 1-1 is for protective relays, Table 1-2 is for the associated communications systems, Table 1-3 is for current and voltage sensing devices, Table 1-4 is for station dc supply and Table 1-5 is for control circuits. There is an additional table, Table 2, which brings alarms into the maintenance arena; this was broken out to simplify the other tables.
- Next look within that table for your device and its degree of monitoring. The tables have different hands-on maintenance activities prescribed depending upon the degree to which you monitor your

equipment. Find the maintenance activity that applies to the monitoring level that you have on your piece of equipment.

- This Maintenance Activity is the minimum maintenance activity that must be documented.
- If your PSMP (plan) requires more activities then you must perform and document ~~more~~to this higher standard.
- After the maintenance activity is known, check the Maximum Maintenance Interval; this time is the maximum time allowed between hands-on maintenance activity cycles of this component.
- If your PSMP (plan) requires activities more often than the Tables maximum then you must perform and document those activities ~~more often~~to this higher standard.
- Any given ~~set~~component of a Protection System ~~equipment~~ can be ~~maintained with any combination of Tables 1a, 1b and 1c. An entity does not~~ determined to have ~~to stick to Table 1a just because some of its equipment~~a degree of monitoring that may be different from another component within that same Protection System. For example, in a given Protection System it is ~~un-~~possible for an entity to have a monitored protective relay and an unmonitored associated communications system; this combination would require hands-on maintenance activity on the relay at least once every 12 years and attention paid to the communications system as often as every 3 months.
- An entity does not have to utilize the extended time intervals ~~in Tables 1b or 1c~~made available by this use of condition-based monitoring. An easy choice to make is to simply utilize ~~Table 1a.~~the unmonitored level of maintenance made available on each of the 5 Tables. While the maintenance activities resulting from ~~choosing to use only Table 1a~~this choice would require more maintenance man-hours, the maintenance requirements may be simpler to document and the resulting maintenance plans may be easier to create.

For each Protection System component, Table 1 shows maximum allowable testing intervals for ~~unmonitored, partially monitored and fully monitored protection systems:~~the various degrees of monitoring. These degrees of monitoring, or levels, range from the legacy unmonitored through a system that is more comprehensively monitored.

~~Table 1 Maximum Allowable Testing Intervals and Maintenance Activities~~

~~Level 1 Monitoring (Unmonitored) Table 1a~~

~~This table applies to electromechanical, analog solid state and other un-monitored Protection Systems components. This table represents the starting point for all required maintenance activities. The object of this group of requirements is to have specific activities accomplished at maximum set time intervals. From this group of activities it follows that CBM or PBM can increase the time intervals between the hands-on maintenance actions.~~

~~Level 2 Monitoring (Partially Monitored) Table 1b~~

~~This table applies to microprocessor relays and other associated Protection System components whose self-monitoring alarms are transmitted to a location (at least daily) where action can be taken for alarmed failures. The attributes of the monitoring system must meet the requirements specified in the header of the Table 1b. Given these advanced monitoring capabilities, it is known that there are specific and routine testing functions occurring within the device. Because of this ongoing monitoring hands-on action is required less often because routine testing is automated. However, there is now an additional task that must be accomplished during the hands-on process – the monitoring and alarming functions must be shown to work.~~

~~Level 3 Monitoring (Fully Monitored) Table 1c~~

~~This table applies to microprocessor relays and other associated Protection System components in which every element or function required for correct operation of the Protection System component is monitored continuously and verified, including verification of the means by which failure alarms or indicators are transmitted to a location within 1 hour or less of the maintenance-correctable issue occurring. This is the highest level of monitoring and if it is available then this gives an entity the ability to have continuous testing of their (Level 3 Monitored) Protection System Component and thus does not have to manually intervene to accomplish routine testing chores. Level 3 Fully Monitored yields continuous monitoring advantages but has substantial technical hurdles that must be overcome; namely that monitoring also verifies the failure of the monitoring and alarming equipment. Without this important ingredient a device that is thought to be continuously monitored could be in an alarm state without the asset owner being aware of this alarm state.~~

It has been noted here that an entity may have a PSMP that is more stringent than PRC-005-2. There may be any number of reasons that an entity chooses a more stringent plan than the minimums prescribed within PRC-005-2, most notable of which is an entity using performance based maintenance methodology. (Another reason for having a more stringent plan than is required could be a regional entity could have more stringent requirements.) Regardless of the rationale behind an entity's more stringent plan, it is incumbent upon them to perform the activities, and perform them at the stated intervals, of the entity's PSMP. A quality PSMP will help assure system reliability and adhering to any given PSMP should be the goal.

Additional Notes for ~~Table 1a, Table 1b, and Table 1c~~Tables 1-1 through 1-5

1. For electro-mechanical relays, adjustment is required to bring measurement accuracy within the tolerance needed by the asset owner. Microprocessor-relays with no remote monitoring of alarm contacts, etc, are un-monitored relays and need to be verified within the Table interval as other un-monitored relays but may be verified as functional by means other than testing by simulated inputs.
2. Microprocessor relays typically are specified by manufacturers as not requiring calibration, but acceptable measurement of power system input values must be verified (verification of the Analog to Digital [A/D] converters) within the Table intervals. The integrity of the digital inputs and outputs that are used as protective functions must be verified within the Table intervals.
3. Any Phasor Measurement Unit (PMU) function whose output is used in a protection system or SPS (as opposed to a monitoring task) must be verified as a component in a protection system.
4. In addition to verifying the circuitry that supplies dc to the protection system, the owner must maintain the station dc supply. The most widespread station dc supply is the station battery and charger. Unlike most Protection System ~~elements~~components physical inspection of station batteries for signs of component failure, reduced performance, and degradation are required to ensure that the station battery is reliable enough to deliver dc power when required. IEEE Standards 450, 1188, and 1106 for Vented Lead-Acid, Valve-Regulated Lead-Acid, and Nickel-Cadmium batteries, respectively (which are the most commonly used substation batteries on the NERC BES) have been developed as an important reference source of maintenance recommendations. The Protection System owner might use the applicable IEEE recommended practice which contains information and recommendations concerning the maintenance, testing and replacement of its substation battery. However, the methods prescribed in these IEEE recommendations cannot be specifically required because they do not apply to all battery applications.

5. Aggregated small entities might distribute the testing of the population of UFLS/UVLS systems, and large entities will usually maintain a portion of these systems in any given year. Additionally, if relatively small quantities of such systems do not perform properly, it will not affect the integrity of the overall program. Thus these distributed systems have decreased requirements as compared to other Protection Systems.

6. Voltage & Current Sensing Device circuit input connections to the protection system relays can be verified by (but not limited to) comparison of measured values on live circuits or by using test currents and voltages on equipment out of service for maintenance. The verification process can be automated or manual. The values should be verified to be as expected, (phase value and phase relationships are both equally important to verify).

7. Verify the protection system tripping function by performing an operational trip test on all components contained in the trip circuit. This includes circuit breaker or circuit switcher trip coils, auxiliary tripping relays (94), lock-out relays (86), and communications-assisted trip scheme elements. Each control circuit path that carries trip signal must be verified, although each path must be checked only once. A maintenance program may include performing an overall test for the entire system at one time, or several split system tests with overlapping trip verification. A documented real-time trip of any given trip path is acceptable in lieu of a functional trip test.

8. "End-to-end test" as used in this supplementary reference is any testing procedure that creates a remote input to the local communications-assisted trip scheme. While this can be interpreted as a GPS-type functional test it is not limited to testing via GPS. Any remote scheme manipulation that can cause action at the local trip path can be used to functionally-test the dc Control Circuitry. A documented real-time trip of any given trip path is acceptable in lieu of a functional trip test. It is possible, with sufficient monitoring, to be able to verify each and every parallel trip path that participated in any given dc Control Circuit trip. Or, another possible solution is that a single trip path from a single monitored relay can be verified to be the trip path that successfully tripped during a real-time operation. The variations are only limited by the degree of engineering and monitoring that an entity desires to pursue.

9. A/D verification may use relay front panel value displays, or values gathered via data communications. Groupings of other measurements (such as vector summation of bus feeder currents) can be used for comparison if calibration requirements assure acceptable measurement of power system input values.

10. Notes 1-9 attempt to describe the testing activities they do not represent the only methods to achieve these activities but rather some possible methods. Technological advances, ingenuity and/or industry accepted techniques can all be used to satisfy maintenance activity requirements; the standard is technology and method neutral in most cases.

8.2 Retention of Records

PRC-005-1 describes a reporting or auditing cycle of one year and retention of records for three years. However, with a three year retention cycle, the records of verification for a protection system will typically be discarded before the next verification, leaving no record of what was done if a ~~Misoperation~~misoperation or failure is to be analyzed.

PRC-005-2 corrects this by requiring:

The Transmission Owner, Generator Owner, and Distribution Provider shall each retain documentation of the two most recent performances of each distinct maintenance activity for the Protection System components, or to the previous on-site audit date, whichever is longer~~.~~

This requirement assures that the documentation shows that the interval between maintenance cycles correctly meets the maintenance interval limits. The requirement is actually alerting the industry to

documentation requirements already implemented by audit teams. Evidence of compliance bookending the interval shows interval accomplished instead of proving only your planned interval.

8.3 Basis for Table 1 Intervals

SPCTF authors collected all available data from Regional Entities (REs) on time intervals recommended for maintenance and test programs. The recommendations vary widely in categorization of relays, defined maintenance actions, and time intervals, precluding development of intervals by averaging. SPCTF also reviewed the 2005 Report [2] of the IEEE Power System Relaying Committee Working Group I-17 (Transmission Relay System Performance Comparison). Review of the I-17 report shows data from a small number of utilities, with no company identification or means of investigating the significance of particular results.

To develop a solid current base of practice, SPCTF surveyed its members regarding their maintenance intervals for electromechanical and microprocessor relays, and asked the members to also provide definitively-known data for other entities. The survey represented 470 GW of peak load, or 64% of the NERC peak load. Maintenance interval averages were compiled by weighting reported intervals according to the size (based on peak load) of the reporting utility. Thus, the averages more accurately represent practices for the large populations of protection systems used across the NERC regions.

The results of this survey with weighted averaging indicate maintenance intervals of 5 years for electromechanical or solid state relays, and 7 years for un-monitored microprocessor relays.

A number of utilities have extended maintenance intervals for microprocessor relays beyond 7 years, based on favorable experience with the particular products they have installed. To provide a technical basis for such extension, SPCTF authors developed a recommendation of 10 years using the Markov modeling approach from [1] as summarized in Section 8.4. The results of this modeling depend on the completeness of self-testing or monitoring. Accordingly, this extended interval is allowed by Table 1 only when such relays are monitored as specified in the ~~header~~attributes of monitoring contained in Tables 1-1 through 1-5 and Table ~~1b~~2. Monitoring is capable of reporting protection system health issues that are likely to affect performance within the 10 year time interval between verifications.

It is important to note that, according to modeling results, protection system availability barely changes as the maintenance interval is varied below the 10-year mark. Thus, reducing the maintenance interval does not improve protection system availability. With the assumptions of the model regarding how maintenance is carried out, reducing the maintenance interval actually degrades protection system availability.

8.4 Basis for Extended Maintenance Intervals for Microprocessor Relays

Table 1 allows maximum verification intervals that are extended based on monitoring level. The industry has experience with self-monitoring microprocessor relays that leads to the Table 1 value for ~~partial monitoring~~a monitored relay as explained in Section 8.3. To develop a basis for the maximum interval for monitored relays in their *Protection System Maintenance – A Technical Reference*, the SPCTF used the methodology of Reference [1], which specifically addresses optimum routine maintenance intervals. The Markov modeling approach of [1] is judged to be valid for the design and typical failure modes of microprocessor relays.

The SPCTF authors ran test cases of the Markov model to calculate two key probability measures:

- Relay Unavailability - the probability that the relay is out of service due to failure or maintenance activity while the power system element to be protected is in service.
- Abnormal Unavailability - the probability that the relay is out of service due to failure or maintenance activity when a fault occurs, leading to failure to operate for the fault.

The parameter in the Markov model that defines self-monitoring capability is ST (for self test). ST = 0 if there is no self-monitoring; ST = 1 for full monitoring. Practical ST values are estimated to range from .75 to .95. The SPCTF simulation runs used constants in the Markov model that were the same as those used in [1] with the following exceptions:

Sn, Normal tripping operations per hour = 21600 (reciprocal of normal fault clearing time of 10 cycles)

Sb, Backup tripping operations per hour = 4320 (reciprocal of backup fault clearing time of 50 cycles)

Rc, Protected component repairs per hour = 0.125 (8 hours to restore the power system)

Rt, Relay routine tests per hour = 0.125 (8 hours to test a protection system)

Rr, Relay repairs per hour = 0.08333 (12 hours to complete a protection system repair after failure)

Experimental runs of the model showed low sensitivity of optimum maintenance interval to these parameter adjustments.

The resulting curves for Relay Unavailability and Abnormal Unavailability versus maintenance interval showed a broad minimum (optimum maintenance interval) in the vicinity of 10 years – the curve is flat, with no significant change in either unavailability value over the range of 9, 10, or 11 years. This was true even for a relay Mean Time between Failures (MTBF) of 50 years, much lower than MTBF values typically published for these relays. Also, the Markov modeling indicates that both the relay unavailability and abnormal unavailability actually become higher with more frequent testing. This shows that the time spent on these more frequent tests yields no failure discoveries that approach the negative impact of removing the relays from service and running the tests.

PSMT SDT further notes that the SPCTF also allowed 25% extensions to the "maximum time intervals". With a 5 year time interval established between manual maintenance activities and a 25% time extension then this equates to a 6.25 year maximum time interval. It is the belief of the PSMT SDT that the SPCTF understood that 6.25 years was thereby an adequate maximum time interval between manual maintenance activities. The PSMT SDT has followed the FERC directive for a *maximum* time interval and has determined that no extensions will be allowed. Six years has been set for the maximum time interval between manual maintenance activities. This maximum time interval also works well for maintenance cycles that have been in use in generator plants for decades.

For monitored relays, the PSMT SDT notes that the SPCTF called for 10 years as the interval between maintenance activities. A 10 year interval with a 25% allowed extension equates to a maximum allowed interval of 12.5 years between manual maintenance activities. The Standard does not allow extensions on any component of the protection system; thus the maximum allowed interval for these ~~devices~~components has been set to12 years. Twelve years also fits well into the traditional maintenance cycles of both substations and generator plants.

Also of note is the Table's use of the term "Calendar" in the column for "Maximum Maintenance Interval". The PSMT SDT deemed it necessary to include the term "Calendar" to facilitate annual maintenance planning, scheduling and implementation. This need is the result of known occurrences of system requirements that could cause maintenance schedules to be missed by a few days or weeks. The PSMT SDT chose the term "Calendar" to preclude the need to have schedules be met to the day. An electro-mechanical protective relay that is maintained in year #1 need not be revisited until 6 years later (year #7). For example: a relay was maintained April 10, 2008; maintenance would need to be completed no later than December 31, 2014.

Section 9 describes a performance-based maintenance process which can be used to justify maintenance intervals other than those described in Table 1.

Section 10 describes sections of the protection system, and overlapping considerations for full verification of the protection system by segments. Segments refer to pieces of the protection system, which can range from a single device to a panel to an entire substation.

Section 11 describes how relay operating records can (but not required to) serve as a basis for verification, reducing the frequency of manual testing.

Section 13 describes how a cooperative effort of relay manufacturers and protection system users can improve the coverage of self-monitoring functions, leading to full monitoring of the bulk of the protection system, and eventual elimination of manual verification or testing.

9. Performance-Based Maintenance Process

In lieu of using the Table 1 intervals, a performance-based maintenance process may be used to establish maintenance intervals (*PRC-005 Attachment A Criteria for a Performance-Based Protection System Maintenance Program*). A performance-based maintenance process may justify longer maintenance intervals, or require shorter intervals relative to Table 1. In order to use a performance-based maintenance process, the documented maintenance program must include records of repairs, adjustments, and corrections to covered protection systems in order to provide historical justification for intervals other than those established in Table 1. Furthermore, the asset owner must regularly analyze these records of corrective actions to develop a ranking of causes. Recurrent problems are to be highlighted, and remedial action plans are to be documented to mitigate or eliminate recurrent problems.

Utilities with performance-based maintenance track performance of protection systems, demonstrate how they analyze findings of performance failures and aberrations, and implement continuous improvement actions. Since no maintenance program can ever guarantee that no malfunction can possibly occur, documentation of a performance-based maintenance program would serve the utility well in explaining to regulators and the public a ~~Misoperation~~misoperation leading to a major system outage event.

A performance-based maintenance program requires auditing processes like those included in widely used industrial quality systems (such as ***ISO 9001-2000, Quality management systems — Requirements;*** or applicable parts of the NIST Baldridge National Quality Program). The audits periodically evaluate:

- The completeness of the documented maintenance process
- Organizational knowledge of and adherence to the process
- Performance metrics and documentation of results
- Remediation of issues
- Demonstration of continuous improvement.

In order to opt into a Performance-based Maintenance (PBM) program the asset owner must first sort the various Protection System components into population segments. Any population segment must be comprised of at least 60 individual units; if any asset owner opts for PBM but does not own 60 units to comprise a population then that asset owner may combine data from other asset owners until the needed 60 units is aggregated. Each population segment must be composed of ~~like devices~~a grouping of Protection Systems or components of a consistent design standard or particular model or type from ~~the same~~a single manufacturer and subjected to similar environmental factors. For example: One segment cannot be comprised of both GE & Westinghouse electro-mechanical lock-out relays; likewise, one segment cannot be comprised of 60 GE lock-out relays, 30 of which are in a dirty environment and the remaining 30 from a clean environment. This PBM process cannot be applied to batteries but can be

applied to all other components of a Protection System including (but not limited to) specific battery chargers, instrument transformers, trip coils and/or control circuitry (etc.).

9.1 Minimum Sample Size

Large Sample Size

An assumption that needs to be made when choosing a sample size is "the sampling distribution of the sample mean can be approximated by a normal probability distribution." The Central Limit Theorem states: "In selecting simple random samples of size *n* from a population, the sampling distribution of the sample mean *x* can be approximated by a normal probability distribution as the sample size becomes large." (Essentials of Statistics for Business and Economics, Anderson, Sweeney, Williams, 2003)

To use the Central Limit Theorem in statistics, the population size should be large. The references below are supplied to help define what is large.

> "… whenever we are using a large simple random sample (rule of thumb: n>=30), the central limit theorem enables us to conclude that the sampling distribution of the sample mean can be approximated by a normal distribution." (Essentials of Statistics for Business and Economics, Anderson, Sweeney, Williams, 2003)
>
> "If samples of size n, when n>=30, are drawn from any population with a mean *u* and a standard deviation σ, the sampling distribution of sample means approximates a normal distribution. The greater the sample size, the better the approximation." (Elementary Statistics - Picturing the World, Larson, Farber, 2003)
>
> "The sample size is large (generally n>=30)… (Introduction to Statistics and Data Analysis - Second Edition, Peck, Olson, Devore, 2005)
>
> "… the normal is often used as an approximation to the *t* distribution in a test of a null hypothesis about the mean of a normally distributed population when the population variance is estimated from a relatively large sample. A sample size exceeding 30 is often given as a minimal size in this connection." (Statistical Analysis for Business Decisions, Peters, Summers, 1968)

Error of Distribution Formula

Beyond the large sample size discussion above, a sample size requirement can be estimated using the bound on the Error of Distribution Formula when the expected result is of a "Pass/Fail" format and will be between 0 and 1.0.

The Error of Distribution Formula is:

$$B = z\sqrt{\frac{\pi(1-\pi)}{n}}$$

Where:

B = bound on the error of distribution (allowable error)

z = standard error
π = expected failure rate
n = sample size required

Solving for n provides:

$$n = \pi(1-\pi)\left(\frac{z}{B}\right)^2$$

Minimum Population Size to use Performance-based Program

One entity's population of components should be large enough to represent a sizeable sample of a vendor's overall population of manufactured devices. For this reason the following assumptions are made:

B = 5%
z = 1.96 (This equates to a 95% confidence level)
π = 4%

Using the equation above, n=59.0.

Minimum Sample Size to evaluate Performance-based Program

The number of components that should be included in a sample size for evaluation of the appropriate testing interval can be smaller because a lower confidence level is acceptable since the sample testing is repeated or updated annually. For this reason, the following assumptions are made:

B = 5%
z = 1.44 (85% confidence level)
π = 4%

Using the equation above, n=31.8.

Recommendation

Based on the above discussion, a sample size should be at least 30 to allow use of the equation mentioned. Using this and the results of the equation, the following numbers are recommended~~:~~ (and required within the standard):

Minimum Population Size to use Performance-based Maintenance Program = 60

Minimum Sample Size to evaluate Performance-based Program = 30.

Once the population segment is defined then maintenance must begin within the intervals as outlined for ~~Level 1 monitoring,~~the device described in the Tables (Table ~~1a).~~1-1 through Table 1-5). Time intervals can be lengthened provided the last year's worth of ~~devices~~components tested (or the last 30 units maintained, whichever is more) had fewer than 4% countable events. It is notable that 4% is specifically chosen because an entity with a small population (60 units) would have to adjust its time intervals between maintenance if more than 1 countable event was found to have occurred during the last analysis

period. A smaller percentage would require that entity to adjust the time interval between maintenance activities if even one unit is found out of tolerance or causes a ~~mis-operation~~Misoperation.

The minimum number of units that can be tested in any given year is 5% of the population. Note that this 5% threshold sets a practical limitation on total length of time between intervals at 20 years.

If at any time the number of countable events equals or exceeds 4% of the last year's tested~~ devices~~ components (or the last 30 units maintained, whichever is more) then the time period between manual maintenance activities must be decreased. There is a time limit on reaching the decreased time at which the countable events is less than 4%; this must be attained within three years.

This additional time period of three years to restore segment performance to <4% countable events is mandated to keep entities from "gaming the PBM system". It is believed that this requirement provides the economic disincentives to discourage asset owners from arbitrarily pushing the PBM time intervals out to up to 20 years without proper statistical data.

10. Overlapping the Verification of Sections of the Protection System

~~Table~~Tables 1~~ requires~~-1 through 1-5 require that every protection system ~~element~~component be periodically verified. One approach is to test the entire protection scheme as a unit, from the secondary windings of voltage and current sources to breaker tripping. For practical ongoing verification, sections of the protection system may be tested or monitored individually. The boundaries of the verified sections must overlap to ensure that there are no gaps in the verification. See Appendix A of this Supplementary Reference for additional discussion on this topic.

All of the methodologies expressed within this report may be combined by an entity, as appropriate, to establish and operate a maintenance program. For example, a protection system may be divided into multiple overlapping sections with a different maintenance methodology for each section:

- Time-based maintenance with appropriate maximum verification intervals for categories of equipment as given in the ~~Unmonitored, Partially Monitored, or Fully Monitored Tables~~Tables 1-1 through 1-5;
- Full monitoring as described in ~~header of Table 1c~~Tables 1-1 through 1-5;
- A performance-based maintenance program as described in Section 9 above or Attachment A of the Standard;
- Opportunistic verification using analysis of fault records as described in Section 11

11. Monitoring by Analysis of Fault Records

Many users of microprocessor relays retrieve fault event records and oscillographic records by data communications after a fault. They analyze the data closely if there has been an apparent ~~Misoperation~~misoperation, as NERC standards require. Some advanced users have commissioned automatic fault record processing systems that gather and archive the data. They search for evidence of component failures or setting problems hidden behind an operation whose overall outcome seems to be correct. The relay data may be augmented with independently captured digital fault recorder (DFR) data retrieved for the same event.

Fault data analysis comprises a legitimate CBM program that is capable of reducing the need for a manual time-interval based check on protection systems whose operations are analyzed. Even electromechanical protection systems instrumented with DFR channels may achieve some CBM benefit. The completeness

of the verification then depends on the number and variety of faults in the vicinity of the relay that produce relay response records, and the specific data captured.

A typical fault record will verify particular parts of certain protection systems in the vicinity of the fault. For a given protection system installation, it may or may not be possible to gather within a reasonable amount of time an ensemble of internal and external fault records that completely verify the protection system.

For example, fault records may verify that the particular relays that tripped are able to trip via the control circuit path that was specifically used to clear that fault. A relay or DFR record may indicate correct operation of the protection communications channel. Furthermore, other nearby protection systems may verify that they restrain from tripping for a fault just outside their respective zones of protection. The ensemble of internal fault and nearby external fault event data can verify major portions of the protection system, and reset the time clock for the Table 1 testing intervals for the verified components only.

What can be shown from the records of one operation is very specific and limited. In a panel with multiple relays, only the specific relay(s) whose operation can be observed without ambiguity in the record and the associated wiring paths are verified. Be careful about using fault response data to verify that settings or calibration are correct. Unless records have been captured for multiple faults close to either side of a setting boundary, setting or calibration could still be incorrect.
If fault record data is used to show that portions or all of a protection system have been verified to meet Table 1 requirements, the owner must retain the fault records used, and the maintenance related conclusions drawn from this data and used to defer Table 1 tests, for at least the retention time interval given in Section 8.2.

12. Importance of Relay Settings in Maintenance Programs

In manual testing programs, many utilities depend on pickup value or zone boundary tests to show that the relays have correct settings and calibration. Microprocessor relays, by contrast, provide the means for continuously monitoring measurement accuracy. Furthermore, the relay digitizes inputs from one set of signals to perform all measurement functions in a single self-monitoring microprocessor system. These relays do not require testing or calibration of each setting.

However, incorrect settings may be a bigger risk with microprocessor relays than with older relays. Some microprocessor relays have hundreds or thousands of settings, many of which are critical to protection system performance.

Monitoring does not check measuring element settings. Analysis of fault records may or may not reveal setting problems. To minimize risk of setting errors after commissioning, the user should enforce strict settings data base management, with reconfirmation (manual or automatic) that the installed settings are correct whenever maintenance activity might have changed them. For background and guidance, see [5].

Table 1 requires that settings must be verified to be as specified. The reason for this requirement is simple. With legacy relays (non-microprocessor protective relays) it is necessary to know the value of the intended setting in order to test, adjust and calibrate the relay. Proving that the relay works per specified setting was the de facto procedure. However, with the advanced microprocessor relays it is possible to change relay settings for the purpose of verifying specific functions and then neglect to return the settings to the specified values. While there is no specific requirement to maintain a settings management process there remains a need to verify that the settings left in the relay are the intended, specified settings. This need may manifest itself after any of the following:

- One or more settings are changed for any reason.
- A relay fails and is repaired or replaced with another unit.

- A relay is upgraded with a new firmware version.

13. Self-Monitoring Capabilities and Limitations

Microprocessor relay proponents have cited the self-monitoring capabilities of these products for nearly 20 years. Theoretically, any element that is monitored does not need a periodic manual test. A problem today is that the community of manufacturers and users has not created clear documentation of exactly what is and is not monitored. Some unmonitored but critical elements are buried in installed systems that are described as self-monitoring.

Until users are able to document how all parts of a system which are required for the protective functions are monitored or verified (with help from manufacturers), they must continue with the unmonitored or partially monitored intervals established in Table 1.

Going forward, manufacturers and users can develop mappings of the monitoring within relays, and monitoring coverage by the relay of user circuits connected to the relay terminals.

To enable the use of full monitoring, the manufacturers of the microprocessor-based self-monitoring components in the protection system should publish for the user a document or map that shows:

- How all internal elements of the product are monitored for any failure that could impact protection system performance.
- Which connected circuits are monitored by checks implemented within the product; how to connect and set the product to assure monitoring of these connected circuits; and what circuits or potential problems are not monitored.

With this information in hand, the user can document full monitoring for some or all sections by:

- Presenting or referencing the product manufacturer's documents.
- Explaining in a system design document the mapping of how every component and circuit that is critical to protection is monitored by the microprocessor product(s) or by other design features.
- Extending the monitoring to include the alarm transmission facilities through which failures are reported within a given time frame to allocate where action can be taken to initiate resolution of the alarm attributed to a maintenance correctable issue, so that failures of monitoring or alarming systems also lead to alarms and action.
- Documenting the plans for verification of any unmonitored ~~elements~~components according to the requirements of Table 1.

14. Notification of Protection System Failures

When a failure occurs in a protection system, power system security may be compromised, and notification of the failure must be conducted in accordance with relevant NERC standard(s). Knowledge of the failure may impact the system operator's decisions on acceptable loading conditions.

This formal reporting of the failure and repair status to the system operator by the protection system owner also encourages the system owner to execute repairs as rapidly as possible. In some cases, a microprocessor relay or carrier set can be replaced in hours; wiring termination failures may be repaired in a similar time frame. On the other hand, a component in an electromechanical or early-generation

electronic relay may be difficult to find and may hold up repair for weeks. In some situations, the owner may have to resort to a temporary protection panel, or complete panel replacement.

15. Maintenance Activities

Some specific maintenance activities are a requirement to ensure reliability. An example would be that a BES entity could be prudent in its protective relay maintenance but if its battery maintenance program is lacking then reliability could still suffer. The NERC glossary outlines a Protection System as containing specific components. PRC-005-02 requires specific maintenance activities be accomplished within a specific time interval. As noted previously, higher technology equipment can contain integral monitoring capability that actually performs maintenance verification activities routinely and often; therefore *manual intervention* to perform certain activities on these type ~~devices~~components may not be needed.

15.1 Protective Relays (Table 1-1)

These relays are defined as the devices that receive the input signal from the current and voltage sensing devices and are used to isolate a faulted portion of the BES. Devices that sense thermal, vibration, seismic, pressure, gas or any other non-electrical inputs are excluded.

Non-microprocessor based equipment is treated differently than microprocessor based equipment in the following ways, the relays should meet the asset owners' tolerances.

- Non-microprocessor devices must be tested with voltage and/or current applied to the device.
- Microprocessor devices may be tested through the integral testing of the device.
    - There is no specific protective relay commissioning test or relay routine test mandated.
    - There is no specific documentation mandated.

15.2 Voltage & Current Sensing Devices (Table 1-3)

These are the current and voltage sensing devices, usually known as instrument transformers. There is presently a technology available (fiber-optic Hall-effect) that does not utilize conventional transformer technology; these devices and other technologies that produce quantities that represent the primary values of voltage and current are considered to be a type of voltage and current sensing devices included in this standard.

The intent of the maintenance activity is to verify the input to the protective relay from the device that produces the current or voltage signal sample.

There is no specific test mandated for these ~~devices~~components. The important thing about these signals is to know that the expected output from these ~~devices~~components actually reaches the protective relay. Therefore, the proof of the proper operation of these ~~devices~~components also demonstrates the integrity of the wiring (or other medium used to convey the signal) from the current and voltage sensing device all the way to the protective relay. The following observations apply.

- There is no specific ratio test, routine test or commissioning test mandated.
- There is no specific documentation mandated.
- It is required that the signal be present at the relay.
- This expectation can be arrived at from any of a number of means; by calculation, by comparison to other circuits, by commissioning tests, by thorough inspection, or by any means needed to verify the circuit meets the asset owner's protection system maintenance program.

- An example of testing might be a saturation test of a CT with the test values applied at the relay panel; this therefore tests the CT as well as the wiring from the relay all the back to the CT.
- Another possible test is to measure the signal from the voltage and/or current sensing devices, during load conditions, at the input to the relay.
- Another example of testing the various voltage and/or current sensing devices is to query the microprocessor relay for the real-time loading; this can then be compared to other devices to verify the quantities applied to this relay. Since the input devices have supplied the proper values to the protective relay then the verification activity has been satisfied. Thus event reports (and oscillographs) can be used to verify that the voltage and current sensing devices are performing satisfactorily.
- Still another method is to measure total watts and vars around the entire bus; this should add up to zero watts and zero vars thus proving the voltage and/or current sensing devices system throughout the bus.
- Another method for proving the voltage and/or current sensing devices is to complete commissioning tests on all of the transformers, cabling, fuses and wiring.
- ~~Other~~Any other methods that provide documentation that the expected transformer values as applied to the inputs to the protective relays are acceptable.

15.3 ~~DC~~ Control ~~Circuitry~~circuitry associated with protective functions (Table 1-5)

This component of Protection Systems includes the trip coil(s) of the circuit breaker, circuit switcher or any other interrupting device. It includes the wiring from the batteries to the relays. It includes the wiring (or other signal conveyance) from every trip output to every trip coil. It includes any device needed for the correct processing of the needed trip signal to the trip coil of the interrupting device~~. In short, every trip~~; this requirement is meant to capture inputs and outputs to and from a protective relay that are necessary for the correct operation of the protective functions. In short, every trip path must be verified and every I/O path must be verified; the method of verification is optional to the asset owner. An example of testing methods to accomplish this might be to verify, with a volt-meter, the existence of the proper voltage at the open contacts, the open circuited input circuit and at the trip coil(s). As every parallel trip path has similar failure modes, each trip path from relay to trip coil must be verified. Each trip coil must be tested to trip the circuit breaker (or other interrupting device) at least once. There is a requirement to operate the circuit breaker (or other interrupting device) at least once every six years as part of the complete functional test. If a suitable monitoring system is installed that verifies every parallel trip path then the manual-intervention testing of those parallel trip paths can be extended ~~to~~beyond twelve years, however the actual operation of the circuit breaker must still occur at least once every six years. This 6-year tripping requirement can be completed as easily as tracking the real-time fault-clearing operations on the circuit breaker~~.~~ or tracking the trip coil(s) operation(s) during circuit breaker routine maintenance actions

The circuit-interrupting device should not be confused with a motor-operated disconnect. The intent of this standard is to require maintenance intervals and activities on Protection Systems equipment and not just all equipment.

It is necessary, however, to classify a device that actuates a high-speed auto-closing ground switch as an interrupting device if this ground switch is utilized in a Protection System and forces a ground fault to occur that then results in an expected Protection System operation to clear the forced ground fault. The SDT believes that this is essentially a transferred-tripping device without the use of communications equipment. If this high-speed ground switch is "…applied on, or designed to provide protection for the BES…" then this device needs to be treated as any other Protection System component. The control circuitry would have to be tested within 12 years and any electromechanically operated device will have to be tested every 6 years. If the spring-operated ground switch can be disconnected from the solenoid

triggering unit then the solenoid triggering unit can easily be tested without the actual closing of the ground blade.

~~Distribution circuit~~ Circuit breakers that participate in ~~the~~a distributed UFLS or UVLS scheme are excluded from the ~~trip-testing~~tripping requirement, but not from the circuit test requirements; since the circuitry must be tested at least once every 12 years and the circuit interrupting device need not be tested then this effectively makes this a 12 year requirement. There are many circuit interrupting devices in the distribution system that will be operating for any given under-frequency event that requires tripping for that event. A failure in the tripping-action of a single ~~distribution~~distributed system circuit breaker will be far less significant than, for example, any single Transmission Protection System failure such as a failure of a Bus Differential Lock-Out Relay. While many failures of these ~~distribution~~distributed system circuit breakers could add up to be significant, it is also believed that ~~distribution~~many circuit breakers are operated often on just fault clearing duty and therefore ~~the distribution~~these circuit breakers are operated at least as frequently as any requirements that ~~might have appeared~~appear in this standard.

The dc control circuitry also includes each auxiliary tripping relay (94) and each lock-out relay (86) that may exist in any ~~given~~particular trip scheme. ~~These~~ If these devices are electro-mechanical ~~devices~~components then they must be trip tested. The PSMT SDT considers these ~~devices~~components to share some similarities in failure modes as electro-mechanical protective relays; as such there is a six year maximum interval between mandated maintenance tasks unless PBM is applied.

When verifying the operation of the 94 and 86 relays each normally-open contact that closes to pass a trip signal must be verified as operating correctly. Normally-open contacts that are not used to pass a trip signal and normally-closed contacts do not have to be verified. Verification of the tripping paths is the requirement.

New technology is also accommodated here; there are some tripping systems that have replaced the traditional hard-wired trip circuitry with other methods of trip-signal conveyance such as fiber-optics. It is the intent of the PSMT SDT to include this, and any other, technology that is used to convey a trip signal from a protective relay to a circuit breaker (or other interrupting device) within this category of equipment.

15.4 Batteries and DC Supplies (Table 1-4)

IEEE guidelines were consulted to arrive at the maintenance activities for batteries. The following guidelines were used: IEEE 450 (for Vented Lead-Acid batteries), IEEE 1188 (for Valve-Regulated Lead-Acid batteries) and IEEE 1106 (for Nickel-Cadmium batteries).

The ~~present~~currently proposed NERC definition of a Protection System is ~~*"protective*~~

- Protective relays~~, *associated communication*~~ which respond to electrical quantities,
- communications systems~~,~~ necessary for correct operation of protective functions,
- voltage and current sensing devices~~,~~ providing inputs to protective relays,
- station dc supply associated with protective functions (including station batteries, battery chargers, and ~~*dc*~~ non-battery-based dc supply), and
- control circuitry associated with protective functions through the trip coil(s) of the circuit breakers or other interrupting devices." The station battery is not the only component that provides dc power to a Protection System. In the new definition for Protection System "station batteries" are replaced with "station dc supply" to make the battery charger and dc producing stored energy devices (that are not a battery) part of the Protection System that must be maintained.

The PSMT SDT recognizes that there are several technological advances in equipment and testing procedures that allow the owner to choose how to verify that a battery string is free of open circuits. The term "continuity" was introduced into the standard to allow the owner to choose how to verify continuity of a battery set by various methods, and not to limit the owner to the two methods recommended in the IEEE standards. Continuity as used in Table 1-4 of the standard refers to verifying that there is a continuous current path from the positive terminal of the station battery set to the negative terminal. Without verifying continuity of a station battery, there is no way to determine that the station battery is available to supply dc power to the station. An open battery string will be an unavailable power source in the event of loss of the battery charger.

Batteries cannot be a unique population segment of a Performance-based Maintenance Program (PBM) because there are too many variables in the electro-chemical process to completely isolate all of the performance-changing criteria necessary for using PBM on battery systems. However, nothing precludes the use of a PBM process for any other part of a dc supply besides the batteries themselves.

15.5 ~~Tele-protection~~Associated communications equipment (Table 1-2)

~~This is also known as associated telecommunications equipment.~~ The equipment used for tripping in a communications assisted trip scheme is a vital piece of the trip circuit. Remote action causing a local trip can be thought of as another parallel trip path to the trip coil that must be tested.

Besides the trip output and wiring to the trip coil(s) there is also a communications medium that must be maintained.

Newer technologies now exist that achieve communications-assisted tripping without the conventional wiring practices of older technology.

For example: older technologies may have included *Frequency Shift Key* methods. This technology requires that guard and trip levels be maintained.

The actual tripping path(s) to the trip coil(s) may be tested as a parallel trip path within the dc control circuitry tests.

Emerging technologies transfer digital information over a variety of carrier mediums that are then interpreted locally as trip signals.

The requirements apply to the communicated signal needed for the proper operation of the protective relay trip logic or scheme. Therefore this standard is applied to equipment used to convey both trip signals (permissive or direct) and block signals.

It was the intent of this standard to require that a test be made of any communications-assisted trip scheme regardless of the vintage of the technology. The essential element is that the tripping (or blocking) occurs locally when the remote action has been asserted; or that the tripping (or blocking) occurs remotely when the local action is asserted.

~~Evidence~~Any evidence of operational test or documentation of measurement of signal level, reflected power or data-error rates ~~is needed~~can fulfill the requirements.

Some newer installations utilize digital signals over fiber-optics from the protective relays in the control house to the circuit interrupting device in the yard. This method of tripping the circuit breaker, even though it might be considered communications, must be maintained per the dc control circuitry maintenance requirements.

15.6 Alarms (Table 2)

In addition to the tables of maintenance for the components of a Protection System, there is an additional table added for alarms. This additional table was added for clarity. This enabled the common alarm attributes to be consolidated into a single spot and thus make it easier to read the Tables 1-1 through 1-5. The alarms need to arrive at a site wherein a corrective action can be initiated. This could be a control room, operations center, etc. The alarming mechanism can be a standard alarming system or an auto-polling system, the only requirement is that the alarm be brought to the action-site within 24 hours. This effectively makes manned-stations equivalent to monitored stations. The alarm of a monitored point (for example a monitored trip path with a lamp) in a manned-station now makes that monitored point eligible for monitored status. Obviously, these same rules apply to a non-manned-station, which is that if the monitored point has an alarm that is auto-reported to the operations center (for example) within 24 hours then it too is considered monitored.

15.7 Examples of Evidence of Compliance

To comply with the requirements of this Standard an entity will have to document and save evidence. The evidence can be of many different forms. The Standard Drafting Team recognizes that there are concurrent evidence requirements of other standards that could, at times fulfill evidence requirements of this standard.

For example: maintaining evidence for operation of Special Protection Systems could concurrently be utilized as proof of the operation of the associated trip coil (provided one can be certain of the trip coil involved). Thus the reporting requirements that one may have to do for the ~~misoperation~~mis-operation of a Special Protection Scheme under PRC-016 could work for the activity tracking requirements under this PRC-005-2.

Another example might be:

Some entities maintain records of all interruptions. These records can be concurrently utilized, if the entity desires, as DC Trip Path verifications.

Analysis of Event Recordings can provide details that can eliminate some hands-on maintenance activities; ~~however,~~ merely printing out the event report provides limited benefit of verification of specific maintenance items.

Standardized-forms, hard or soft copy, can be created, filled out and archived. These forms can be of the entities' design and can be aimed at answering the specific requirements of the Standard as well as additional requirements as needed by the entity.

Fill-in blanks, check-boxes, drop-down lists, auto-date formats, etc. can all be used as the primary action is the maintenance activity~~; the secondary action is~~ time interval; other techniques can be used to verify that the maintenance activity was performed, such as test reports.

Other evidence of compliance might be, but is not limited to:

Prints, maintenance plans, training materials, policies, procedures, data print-outs or exhibits, correspondence, reports, data-base records, etc.

There is the legacy method of paper trail for everything, this is acceptable. There are also paperless systems existing and evolving that are also acceptable.

Proof of compliance should simply be the entities' records of maintenance completed.

16. References

NERC/SPCTF/Relay_Maintenance_Tech_Ref_approved_by_PC.pdf

1. "Predicating The Optimum Routine test Interval For Protection Relays," by J. J. Kumm, M.S. Weber, D. Hou, and E. O. Schweitzer, III, IEEE Transactions on Power Delivery, Vol. 10, No. 2, April 1995.
2. "Transmission Relay System Performance Comparison For 2000, 2001, 2002, 2003, 2004 and 2005," Working Group I17 of Power System Relaying Committee of IEEE Power Engineering Society, May 2006.
3. "A Survey of Relaying Test Practices," Special Report by WG I11 of Power System Relaying Committee of IEEE Power Engineering Society, September 16, 1999.
4. "Transmission Protective Relay System Performance Measuring Methodology," Working Group I3 of Power System Relaying Committee of IEEE Power Engineering Society, January 2002.
5. "Processes, Issues, Trends and Quality Control of Relay Settings," Working Group C3 of Power System Relaying Committee of IEEE Power Engineering Society, December 2006.
6. "Proposed Statistical Performance Measures for Microprocessor-Based Transmission-Line Protective Relays, Part I - Explanation of the Statistics, and Part II - Collection and Uses of Data," Working Group D5 of Power System Relaying Committee of IEEE Power Engineering Society, May 1995; Papers 96WM 016-6 PWRD and 96WM 127-1 PWRD, 1996 IEEE Power Engineering Society Winter Meeting.
7. "Analysis And Guidelines For Testing Numerical Protection Schemes," Final Report of CIGRE WG 34.10, August 2000.
8. "Use of Preventative Maintenance and System Performance Data to Optimize Scheduled Maintenance Intervals," H. Anderson, R. Loughlin, and J. Zipp, Georgia Tech Protective Relay Conference, May 1996.

PSMT SDT References

9. "Essentials of Statistics for Business and Economics" Anderson, Sweeney, Williams, 2003
10. "Introduction to Statistics and Data Analysis" - Second Edition, Peck, Olson, Devore, 2005
11. "Statistical Analysis for Business Decisions" Peters, Summers, 1968

Figures

Figure 1: Typical Transmission System

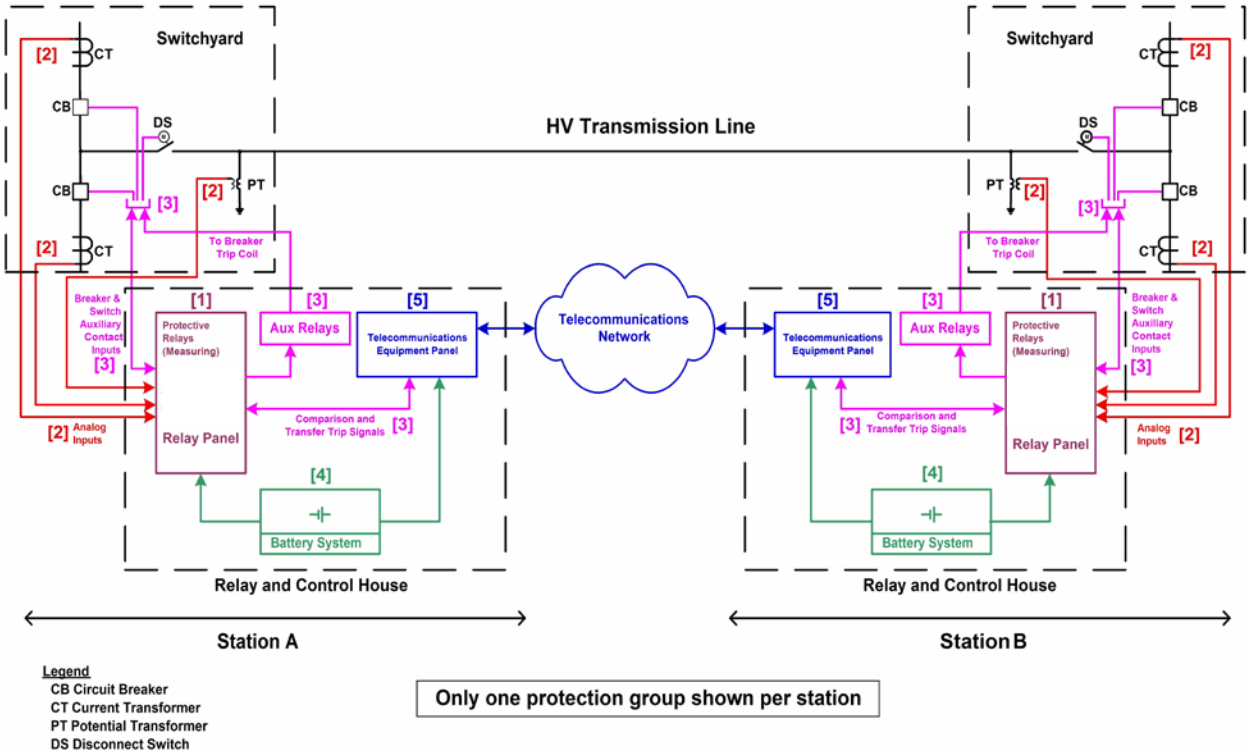

For information on ~~numbered~~ components, see ***Figure 1 & 2 Legend – Components of Protection Systems***

(Return)

Figure 2: Typical Generation System

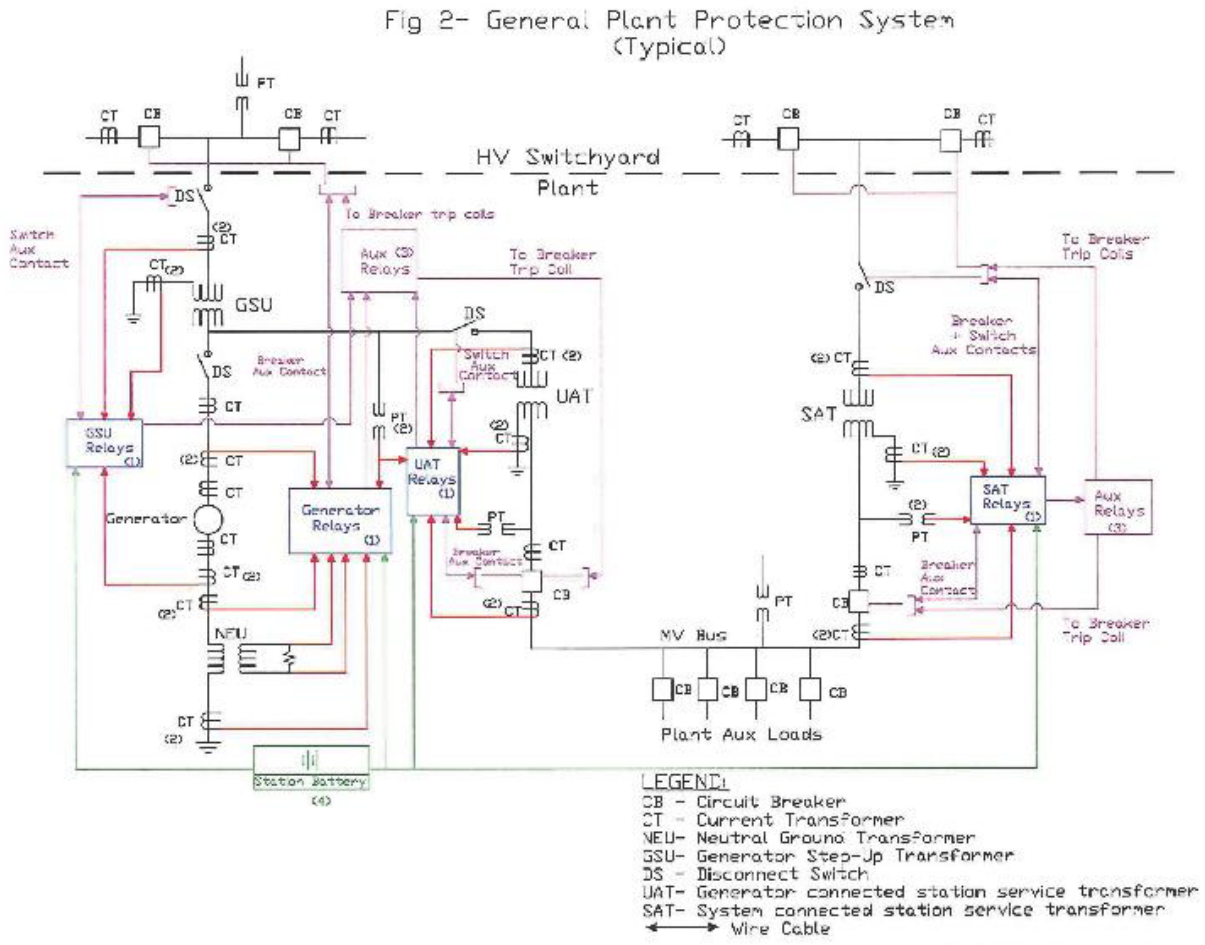

For information on ~~numbered~~ components, see ***Figure 1 & 2 Legend – Components of Protection Systems***

(Return)

Figure 1 & 2 Legend – Components of Protection Systems

Number ~~In~~in Figure	Component of Protection System	Includes	Excludes
1	Protective relays which respond to electrical quantities	All protective relays that use current and/or voltage inputs from current & voltage sensors and that trip the 86, 94 or trip coil.	Devices that use non-electrical methods of operation including thermal, pressure, gas accumulation, and vibration. Any ancillary equipment not specified in the definition of Protection systems. Control and/or monitoring equipment that is not a part of the automatic tripping action of the Protection System
2	Voltage ~~& Current Sensing Devices~~ and ~~associated circuitry~~current sensing devices providing inputs to protective relays	The signals from the voltage & current sensing devices ~~for protective relays as well as the wiring (or other medium) used to convey signal output from the sensor~~ to the protective relay input.	Voltage & current sensing devices that are not a part of the Protection System, including sync-check systems, metering systems and data acquisition systems.
3	~~DC Circuitry~~control circuitry associated with protective functions	All control wiring (or other medium for conveying trip signals) associated with the tripping action of 86 devices, 94 devices or trip coils (from all parallel trip paths). This would include fiber-optic systems that carry a trip signal as well as hard-wired systems that carry trip current.	Closing circuits, SCADA circuits
4	Station dc supply	Batteries and battery chargers and any control power system which has the function of supplying power to the protective relays, associated trip circuits and trip coils.	Any power supplies that are not used to power protective relays or their associated trip circuits and trip coils.
5	~~Associated communications systems~~Communications systems necessary for correct operation of protective functions	Tele-protection equipment used to convey ~~remote tripping action to a local trip coil or blocking signal to~~specific information, in the ~~trip logic (if applicable).~~form of analog or digital signals, necessary for the correct operation of protective functions.	Any communications equipment that is not used to convey information necessary for ~~remote tripping action to a local trip coil or blocking signal to~~ the ~~trip logic (if applicable).~~correct operation of protective functions.

(Return)

Figure 3: Requirements Flowchart

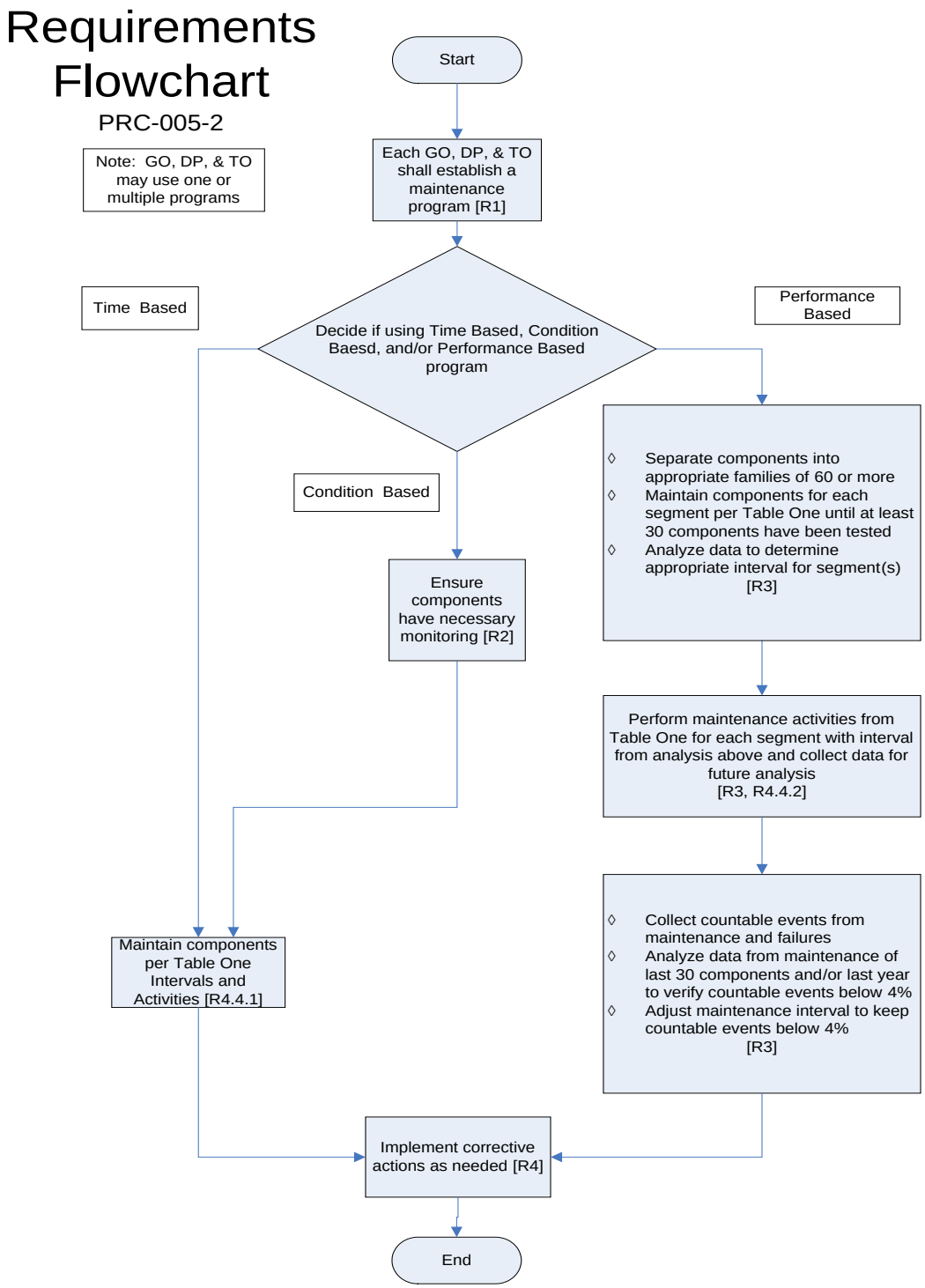

Appendix A

The following illustrates the concept of overlapping verifications and tests as summarized in Section 10 of the paper. As an example, Figure A-1 shows protection for a critical transmission line by carrier blocking directional comparison pilot relaying. The goal is to verify the ability of the entire two-terminal pilot protection scheme to protect for line faults, and to avoid over-tripping for faults external to the transmission line zone of protection bounded by the current transformer locations.

Figure A-1

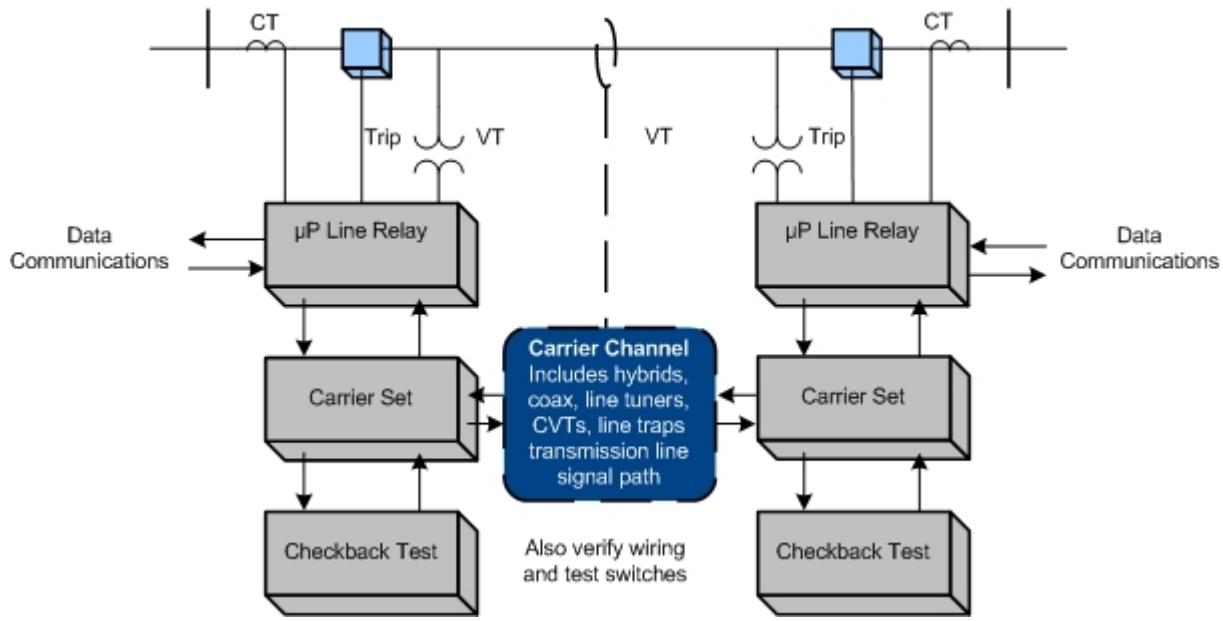

In this example (Figure A1), verification takes advantage of the self-monitoring features of microprocessor multifunction line relays at each end of the line. For each of the line relays themselves, the example assumes that the user has the following arrangements in place:

1. The relay has a data communications port that can be accessed from remote locations.
2. The relay has internal self-monitoring programs and functions that report failures of internal electronics, via communications messages or alarm contacts to SCADA.
3. The relays report loss of dc power, and the relays themselves or external monitors report the state of the dc battery supply.
4. The CT and PT inputs to the relays are used for continuous calculation of metered values of volts, amperes, plus Watts and VARs on the line. These metered values are reported by data communications. For maintenance, the user elects to compare these readings to those of other relays, meters, or DFRs. The other readings may be from redundant relaying or measurement systems or they may be derived from values in other protection zones. Comparison with other such readings to within required relaying accuracy verifies Voltage & Current Sensing

Devices, wiring, and analog signal input processing of the relays. One effective way to do this is to utilize the relay metered values directly in SCADA, where they can be compared with other references or state estimator values.

5. Breaker status indication from auxiliary contacts is verified in the same way as in (2). Status indications must be consistent with the flow or absence of current.

6. Continuity of the breaker trip circuit from dc bus through the trip coil is monitored by the relay and reported via communications.

7. Correct operation of the on-off carrier channel is also critical to security of the protection system, so each carrier set has a connected or integrated automatic checkback test unit. The automatic checkback test runs several times a day. Newer carrier sets with integrated checkback testing check for received signal level and report abnormal channel attenuation or noise, even if the problem is not severe enough to completely disable the channel.

These monitoring activities plus the check-back test comprise automatic verification of all the protection system elements that experience tells us are the most prone to fail. But, does this comprise a complete verification?

Figure A-2

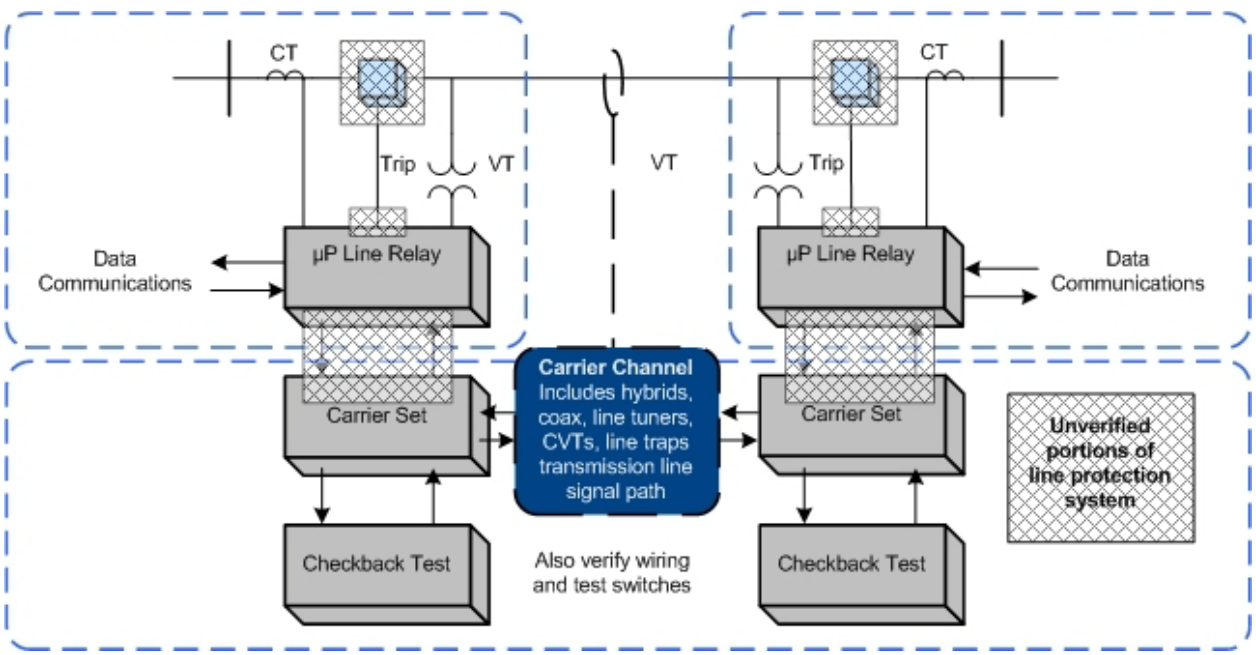

The dotted boxes of Figure A-2 show the sections of verification defined by the monitoring and verification practices just listed. These sections are not completely overlapping, and the shaded regions show elements that are not verified:

1. The continuity of trip coils is verified, but no means is provided for validating the ability of the circuit breaker to trip if the trip coil should be energized.

2. Within each line relay, all the microprocessors that participate in the trip decision have been verified by internal monitoring. However, the trip circuit is actually energized by the contacts of a small telephone-type "ice cube" relay within the line protective relay. The microprocessor energizes the coil of this ice cube relay through its output data port and a transistor driver circuit. There is no monitoring of the output port, driver circuit, ice cube relay, or contacts of that relay. These components are critical for tripping the circuit breaker for a fault.
3. The check-back test of the carrier channel does not verify the connections between the relaying microprocessor internal decision programs and the carrier transmitter keying circuit or the carrier receiver output state. These connections include microprocessor I/O ports, electronic driver circuits, wiring, and sometimes telephone-type auxiliary relays.
4. The correct states of breaker and disconnect switch auxiliary contacts are monitored, but this does not confirm that the state change indication is correct when the breaker or switch opens.

A practical solution for (1) and (2) is to observe actual breaker tripping, with a specified maximum time interval between trip tests. Clearing of naturally-occurring faults are demonstrations of operation that reset the time interval clock for testing of each breaker tripped in this way. If faults do not occur, manual tripping of the breaker through the relay trip output via data communications to the relay microprocessor meets the requirement for periodic testing.

PRC-005 does not address breaker maintenance, and its protection system test requirements can be met by energizing the trip circuit in a test mode (breaker disconnected) through the relay microprocessor. This can be done via a front-panel button command to the relay logic, or application of a simulated fault with a relay test set. However, utilities have found that breakers often show problems during protection system tests. It is recommended that protection system verification include periodic testing of the actual tripping of connected circuit breakers.

Testing of the relay-carrier set interface in (3) requires that each relay key its transmitter, and that the other relay demonstrate reception of that blocking carrier. This can be observed from relay or DFR records during naturally occurring faults, or by a manual test. If the checkback test sequence were incorporated in the relay logic, the carrier sets and carrier channel are then included in the overlapping segments monitored by the two relays, and the monitoring gap is completely eliminated.

Appendix B — Protection System Maintenance Standard Drafting Team

Charles W. Rogers
Chairman
Consumers Energy Co.

John B. Anderson
Xcel Energy

Merle E. Ashton
Tri-State G&T

Bob Bentert
Florida Power & Light Company

John Ciufo
Hydro One Inc

Sam Francis
Oncor

Carol A Gerou
Midwest Reliability Organization

William Shultz
Southern Company Generation

Russell C Hardison
Tennessee Valley Authority

David Harper
NRG Texas Maintenance Services

Mark Lukas
ComEd

Al McMeekin
NERC Staff
North American Electric Reliability Corporation

Mark Peterson
Great River Energy

~~William Shultz~~
~~Southern Company Generation~~

Leonard Swanson, Jr
National Grid USA

Eric A Udren
Quanta Technology

Philip B Winston
~~Georgia Power~~Southern Company Transmission

John A Zipp
ITC Holdings

A. Introduction

1. Title: **Transmission and Generation Protection System Maintenance and Testing**

2. Number: PRC-005-1

3. Purpose: To ensure all transmission and generation Protection Systems affecting the reliability of the Bulk Electric System (BES) are maintained and tested.

4. Applicability

4.1. Transmission Owner.

4.2. Generator Owner.

4.3. Distribution Provider that owns a transmission Protection System.

5. Effective Date: May 1, 2006

B. Requirements

R1. Each Transmission Owner and any Distribution Provider that owns a transmission Protection System and each Generator Owner that owns a generation Protection System shall have a Protection System maintenance and testing program for Protection Systems that affect the reliability of the BES. The program shall include:

R1.1. Maintenance and testing intervals and their basis.

R1.2. Summary of maintenance and testing procedures.

R2. Each Transmission Owner and any Distribution Provider that owns a transmission Protection System and each Generator Owner that owns a generation Protection System shall provide documentation of its Protection System maintenance and testing program and the implementation of that program to its Regional Reliability Organization on request (within 30 calendar days). The documentation of the program implementation shall include:

R2.1. Evidence Protection System devices were maintained and tested within the defined intervals.

R2.2. Date each Protection System device was last tested/maintained.

C. Measures

M1. Each Transmission Owner and any Distribution Provider that owns a transmission Protection System and each Generator Owner that owns a generation Protection System that affects the reliability of the BES, shall have an associated Protection System maintenance and testing program as defined in Requirement 1.

M2. Each Transmission Owner and any Distribution Provider that owns a transmission Protection System and each Generator Owner that owns a generation Protection System that affects the reliability of the BES, shall have evidence it provided documentation of its associated Protection System maintenance and testing program and the implementation of its program as defined in Requirement 2.

D. Compliance

1. Compliance Monitoring Process

1.1. Compliance Monitoring Responsibility

Regional Reliability Organization.

1.2. Compliance Monitoring Period and Reset Time Frame

One calendar year.

1.3. Data Retention

The Transmission Owner and any Distribution Provider that owns a transmission Protection System and each Generator Owner that owns a generation Protection System, shall retain evidence of the implementation of its Protection System maintenance and testing program for three years.

The Compliance Monitor shall retain any audit data for three years.

1.4. Additional Compliance Information

The Transmission Owner and any Distribution Provider that owns a transmission Protection System and the Generator Owner that owns a generation Protection System, shall each demonstrate compliance through self-certification or audit (periodic, as part of targeted monitoring or initiated by complaint or event), as determined by the Compliance Monitor.

2. Levels of Non-Compliance

2.1. Level 1: Documentation of the maintenance and testing program provided was incomplete as required in R1, but records indicate maintenance and testing did occur within the identified intervals for the portions of the program that were documented.

2.2. Level 2: Documentation of the maintenance and testing program provided was complete as required in R1, but records indicate that maintenance and testing did not occur within the defined intervals.

2.3. Level 3: Documentation of the maintenance and testing program provided was incomplete, and records indicate implementation of the documented portions of the maintenance and testing program did not occur within the identified intervals.

2.4. Level 4: Documentation of the maintenance and testing program, or its implementation, was not provided.

E. Regional Differences

None identified.

Version History

Version	Date	Action	Change Tracking
0	April 1, 2005	Effective Date	New
1	December 1, 2005	1. Changed incorrect use of certain hyphens (-) to “en dash” (–) and “em dash (—).” 2. Added “periods” to items where appropriate. 3. Changed “Timeframe” to “Time Frame” in item D, 1.2.	01/20/05

A. Introduction

1. Title: **Implementation and Documentation of Underfrequency Load Shedding Equipment Maintenance Program**

2. Number: PRC-008-0

3. Purpose: Provide last resort system preservation measures by implementing an Under Frequency Load Shedding (UFLS) program.

4. Applicability:

4.1. Transmission Owner required by its Regional Reliability Organization to have a UFLS program

4.2. Distribution Provider required by its Regional Reliability Organization to have a UFLS program

5. Effective Date: April 1, 2005

B. Requirements

R1. The Transmission Owner and Distribution Provider with a UFLS program (as required by its Regional Reliability Organization) shall have a UFLS equipment maintenance and testing program in place. This UFLS equipment maintenance and testing program shall include UFLS equipment identification, the schedule for UFLS equipment testing, and the schedule for UFLS equipment maintenance.

R2. The Transmission Owner and Distribution Provider with a UFLS program (as required by its Regional Reliability Organization) shall implement its UFLS equipment maintenance and testing program and shall provide UFLS maintenance and testing program results to its Regional Reliability Organization and NERC on request (within 30 calendar days).

C. Measures

M1. Each Transmission Owner's and Distribution Provider's UFLS equipment maintenance and testing program contains the elements specified in Reliability Standard PRC-007-0_R1.

M2. Each Transmission Owner and Distribution Provider shall have evidence that it provided the results of its UFLS equipment maintenance and testing program's implementation to its Regional Reliability Organization and NERC on request (within 30 calendar days).

D. Compliance

1. Compliance Monitoring Process

1.1. Compliance Monitoring Responsibility

Compliance Monitor: Regional Reliability Organization.

1.2. Compliance Monitoring Period and Reset Timeframe

On request (within 30 calendar days).

1.3. Data Retention

None specified.

1.4. Additional Compliance Information

None.

2. Levels of Non-Compliance

2.1. Level 1: Documentation of the maintenance and testing program was incomplete, but records indicate implementation was on schedule.

2.2. Level 2: Complete documentation of the maintenance and testing program was provided, but records indicate that implementation was not on schedule.

2.3. Level 3: Documentation of the maintenance and testing program was incomplete, and records indicate implementation was not on schedule.

2.4. Level 4: Documentation of the maintenance and testing program, or its implementation was not provided.

E. Regional Differences

1. None identified.

Version History

Version	Date	Action	Change Tracking
0	April 1, 2005	Effective Date	New

A. Introduction

1. Title: **Undervoltage Load Shedding System Maintenance and Testing**

2. Number: PRC-011-0

3. Purpose: Provide system preservation measures in an attempt to prevent system voltage collapse or voltage instability by implementing an Undervoltage Load Shedding (UVLS) program.

4. Applicability:

4.1. Transmission Owner that owns a UVLS system

4.2. Distribution Provider that owns a UVLS system

5. Effective Date: April 1, 2005

B. Requirements

R1. The Transmission Owner and Distribution Provider that owns a UVLS system shall have a UVLS equipment maintenance and testing program in place. This program shall include:

R1.1. The UVLS system identification which shall include but is not limited to:

R1.1.1. Relays.

R1.1.2. Instrument transformers.

R1.1.3. Communications systems, where appropriate.

R1.1.4. Batteries.

R1.2. Documentation of maintenance and testing intervals and their basis.

R1.3. Summary of testing procedure.

R1.4. Schedule for system testing.

R1.5. Schedule for system maintenance.

R1.6. Date last tested/maintained.

R2. The Transmission Owner and Distribution Provider that owns a UVLS system shall provide documentation of its UVLS equipment maintenance and testing program and the implementation of that UVLS equipment maintenance and testing program to its Regional Reliability Organization and NERC on request (within 30 calendar days).

C. Measures

M1. Each Transmission Owner and Distribution Provider that owns a UVLS system shall have documentation that its UVLS equipment maintenance and testing program conforms with Reliability Standard PRC-011-0_R1.

M2. Each Transmission Owner and Distribution Provider that owns a UVLS system shall have evidence it provided documentation of its UVLS equipment maintenance and testing program and the implementation of that UVLS equipment maintenance and testing program as specified in Reliability Standard PRC-011-0_R2.

D. Compliance

1. Compliance Monitoring Process

1.1. Compliance Monitoring Responsibility

Compliance Monitor: Regional Reliability Organization.

1.2. Compliance Monitoring Period and Reset Timeframe

On request (30 calendar days).

1.3. Data Retention

None specified.

1.4. Additional Compliance Information

None.

2. Levels of Non-Compliance

2.1. Level 1: Documentation of the maintenance and testing program was incomplete, but records indicate implementation was on schedule.

2.2. Level 2: Documentation of the maintenance and testing program was incomplete, but records indicate implementation was on schedule.

2.3. Level 3: Documentation of the maintenance and testing program was incomplete, and records indicate implementation was not on schedule.

2.4. Level 4: Documentation of the maintenance and testing program, or its implementation, was not provided.

E. Regional Differences

1. None identified.

Version History

Version	Date	Action	Change Tracking
0	April 1, 2005	Effective Date	New

A. Introduction

1. Title: **Special Protection System Maintenance and Testing**

2. Number: PRC-017-0

3. Purpose: To ensure that all Special Protection Systems (SPS) are properly designed, meet performance requirements, and are coordinated with other protection systems. To ensure that maintenance and testing programs are developed and misoperations are analyzed and corrected.

4. Applicability:

4.1. Transmission Owner that owns an SPS

4.2. Generator Owner that owns an SPS

4.3. Distribution Provider that owns an SPS

5. Effective Date: April 1, 2005

B. Requirements

R1. The Transmission Owner, Generator Owner, and Distribution Provider that owns an SPS shall have a system maintenance and testing program(s) in place. The program(s) shall include:

R1.1. SPS identification shall include but is not limited to:

R1.1.1. Relays.

R1.1.2. Instrument transformers.

R1.1.3. Communications systems, where appropriate.

R1.1.4. Batteries.

R1.2. Documentation of maintenance and testing intervals and their basis.

R1.3. Summary of testing procedure.

R1.4. Schedule for system testing.

R1.5. Schedule for system maintenance.

R1.6. Date last tested/maintained.

R2. The Transmission Owner, Generator Owner, and Distribution Provider that owns an SPS shall provide documentation of the program and its implementation to the appropriate Regional Reliability Organizations and NERC on request (within 30 calendar days).

C. Measures

M1. The Transmission Owner, Generator Owner, and Distribution Provider that owns an SPS shall have a system maintenance and testing program(s) in place that includes all items in Reliability Standard PRC-017-0_R1.

M2. The Transmission Owner, Generator Owner, and Distribution Provider that owns an SPS shall have evidence it provided documentation of the program and its implementation to the appropriate Regional Reliability Organizations and NERC on request (within 30 calendar days).

D. Compliance

1. Compliance Monitoring Process

1.1. Compliance Monitoring Responsibility

Compliance Monitor: Regional Reliability Organization. Each Region shall report compliance and violations to NERC via the NERC Compliance Reporting process.

Timeframe:
On request (30 calendar days.)

1.2. Compliance Monitoring Period and Reset Timeframe

Compliance Monitor: Regional Reliability Organization.

1.3. Data Retention

None specified.

1.4. Additional Compliance Information

None.

2. Levels of Non-Compliance

2.1. Level 1: Documentation of the maintenance and testing program was incomplete, but records indicate implementation was on schedule.

2.2. Level 2: Complete documentation of the maintenance and testing program was provided, but records indicate that implementation was not on schedule.

2.3. Level 3: Documentation of the maintenance and testing program was incomplete, and records indicate implementation was not on schedule.

2.4. Level 4: Documentation of the maintenance and testing program, or its implementation, was not provided.

E. Regional Differences

1. None identified.

Version History

Version	Date	Action	Change Tracking
0	April 1, 2005	Effective Date	New

NERC
NORTH AMERICAN ELECTRIC RELIABILITY CORPORATION

Standards Announcement

Existing Ballot Window Re-opened

Now available at: https://standards.nerc.net/CurrentBallots.aspx

Project 2007-17: Protection System Maintenance and Testing
A successive ballot for the proposed standard, PRC-005-2 — Protection System Maintenance, and a concurrent, non-binding poll on revised VRFs and VSLs are being reopened until a quorum is reached.

Instructions

For those members who have not cast a ballot during this voting window, your vote is needed to achieve quorum since the votes and comments from the last ballot will not be carried over. In addition, members of the ballot pool will need to cast a new opinion on the revised VRFs and VSLs. The drafting team will consider all comments (those submitted with a comment form, and those submitted with a ballot or with the non-binding poll) and will determine whether to make additional changes to the standard and its implementation plan.

During the successive ballot window, members of the ballot pool associated with this project may log in and submit their votes from the following page: https://standards.nerc.net/CurrentBallots.aspx

Documents for this project, including an off-line unofficial copy of the questions listed in the comment forms are posted at the following site:
http://www.nerc.com/filez/standards/Protection_System_Maintenance_Project_2007-17.html

Note that PRC-005-2 reflects the merging of the following standards into a single standard, making it impractical to post a "redline" of proposed PRC-005-2 that shows the changes to the last balloted version of the standard.

- PRC-005-1 — Transmission and Generation Protection System Maintenance and Testing
- PRC-008-0 — Underfrequency Load Shedding Equipment Maintenance Program
- PRC-011-0 — UVLS System Maintenance and Testing
- PRC-017-0 — Special Protection System Maintenance and Testing

The last approved versions of PRC-005-1, PRC-008-0, PRC-011-0, and PRC-017-0 have been posted on the project's Web page for easy reference at:
http://www.nerc.com/filez/standards/Protection_System_Maintenance_Project_2007-17.html

Next Steps

The drafting team will consider all comments (those submitted with a comment form, and those submitted with a ballot or with the non-binding poll) and will determine whether to make additional changes to the standard and its implementation plan.

Project Background

The proposed PRC-005-2 – Protection System Maintenance standard addresses FERC directives from FERC Order 693, as well as issues identified by stakeholders. In accordance with the FERC directives, this draft standard establishes requirements for a time-based maintenance program, where all relevant devices are maintained according to prescribed maximum intervals. It further establishes requirements for a condition-based maintenance program, where the hands-on maintenance intervals are adjusted to reflect the known and reported condition of the relevant devices. For a performance-based maintenance program, it ascertains where the hands-on maintenance intervals are adjusted to reflect the historical performance of the relevant devices.

Applicability of Standards in Project

Transmission Owners
Generator Owners
Distribution Providers

Standards Development Process

The Standard Processes Manual contains all the procedures governing the standards development process. The success of the NERC standards development process depends on stakeholder participation. We extend our thanks to all those who participate.

For more information or assistance, please contact Monica Benson, Standards Process Administrator, at monica.benson@nerc.net or at 609.452.8060.

North American Electric Reliability Corporation
116-390 Village Blvd.
Princeton, NJ 08540
609.452.8060 | www.nerc.com

NERC
NORTH AMERICAN ELECTRIC RELIABILITY CORPORATION

Standards Announcement

Successive Ballot Window Open
December 10 – December 19, 2010

Now available at: https://standards.nerc.net/CurrentBallots.aspx

Project 2007-17: Protection System Maintenance and Testing

A successive ballot for the proposed standard, PRC-005-2 — Protection System Maintenance, and a concurrent, non-binding poll on revised VRFs and VSLs are being conducted through **8:00 pm Eastern on Sunday, December 19**.

Instructions

All members of the ballot pool must cast a new ballot since the votes and comments from the last ballot will not be carried over. In addition, members of the ballot pool will need to cast a new opinion on the revised VRFs and VSLs. The drafting team will consider all comments (those submitted with a comment form, and those submitted with a ballot or with the non-binding poll) and will determine whether to make additional changes to the standard and its implementation plan.

During the successive ballot window, members of the ballot pool associated with this project may log in and submit their votes from the following page: https://standards.nerc.net/CurrentBallots.aspx

Documents for this project, including an off-line unofficial copy of the questions listed in the comment forms are posted at the following site:
http://www.nerc.com/filez/standards/Protection_System_Maintenance_Project_2007-17.html

Note that PRC-005-2 reflects the merging of the following standards into a single standard, making it impractical to post a "redline" of proposed PRC-005-2 that shows the changes to the last balloted version of the standard.

- PRC-005-1 — Transmission and Generation Protection System Maintenance and Testing
- PRC-008-0 — Underfrequency Load Shedding Equipment Maintenance Program
- PRC-011-0 — UVLS System Maintenance and Testing
- PRC-017-0 — Special Protection System Maintenance and Testing

The last approved versions of PRC-005-1, PRC-008-0, PRC-011-0, and PRC-017-0 have been posted on the project's Web page for easy reference at:
http://www.nerc.com/filez/standards/Protection_System_Maintenance_Project_2007-17.html

Next Steps – Successive Ballot and New, Non-binding Poll of VRFs and VSLs

The drafting team will consider all comments (those submitted with a comment form, and those submitted with a ballot or with the non-binding poll) and will determine whether to make additional changes to the standard and its implementation plan.

Project Background

The proposed PRC-005-2 – Protection System Maintenance standard addresses FERC directives from FERC Order 693, as well as issues identified by stakeholders. In accordance with the FERC directives, this draft standard establishes requirements for a time-based maintenance program, where all relevant devices are maintained according to prescribed maximum intervals. It further establishes requirements for a condition-based maintenance program, where the hands-on maintenance intervals are adjusted to reflect the known and reported condition of the relevant devices. For a performance-based maintenance program, it ascertains where the hands-on maintenance intervals are adjusted to reflect the historical performance of the relevant devices.

Applicability of Standards in Project

Transmission Owners
Generator Owners
Distribution Providers

Standards Development Process

The Standard Processes Manual contains all the procedures governing the standards development process. The success of the NERC standards development process depends on stakeholder participation. We extend our thanks to all those who participate. For more information or assistance, please contact Monica Benson at monica.benson@nerc.net.

For more information or assistance, please contact Monica Benson, Standards Process Administrator, at monica.benson@nerc.net or at 609.452.8060.

North American Electric Reliability Corporation
116-390 Village Blvd.
Princeton, NJ 08540
609.452.8060 | www.nerc.com

NERC
NORTH AMERICAN ELECTRIC RELIABILITY CORPORATION

Standards Announcement

Successive Formal Comment Period Open
November 17-December 17, 2010

Now available at: http://www.nerc.com/filez/standards/Protection_System_Maintenance_Project_2007-17.html

Project 2007-17: Protection System Maintenance and Testing

A 30-day formal comment period for the proposed standard, PRC-005-2 — Protection System Maintenance, and its associated implementation plan and reference documents is now open **until 8 p.m. Eastern on December17, 2010**.

Instructions

Please use this electronic form to submit comments on PRC-005-2 and its associated implementation plan and reference documents. If you experience any difficulties in using the electronic form, please contact Monica Benson at Monica.Benson@nerc.net.

Documents for this project, including an off-line unofficial copy of the questions listed in the comment forms are posted at the following site:
http://www.nerc.com/filez/standards/Protection_System_Maintenance_Project_2007-17.html

Note that PRC-005-2 reflects the merging of the following standards into a single standard, making it impractical to post a "redline" of proposed PRC-005-2 that shows the changes to the last balloted version of the standard.

- PRC-005-1 — Transmission and Generation Protection System Maintenance and Testing
- PRC-008-0 — Underfrequency Load Shedding Equipment Maintenance Program
- PRC-011-0 — UVLS System Maintenance and Testing
- PRC-017-0 — Special Protection System Maintenance and Testing

The last approved versions of PRC-005-1, PRC-008-0, PRC-011-0, and PRC-017-0 have been posted on the project's web page for easy reference at:

http://www.nerc.com/filez/standards/Protection_System_Maintenance_Project_2007-17.html

Next Steps – Successive Ballot and New, Non-binding Poll of VRFs and VSLs

During the last 10 days of the 30-day formal comment period, a successive ballot will be conducted for 10 days. All members of the ballot pool must cast a new ballot since the votes and comments from the last ballot will not be carried over. In addition, members of the ballot pool will need to cast a new opinion on the revised VRFs and VSLs. The drafting team will consider all comments (those submitted with a comment form, and those submitted with a ballot or with the non-binding poll) and will determine whether to make additional changes to

the standard and its implementation plan.

Project Background

The proposed PRC-005-2 – Protection System Maintenance standard addresses FERC directives from FERC Order 693, as well as issues identified by stakeholders. In accordance with the FERC directives, this draft standard establishes requirements for a time-based maintenance program, where all relevant devices are maintained according to prescribed maximum intervals. It further establishes requirements for a condition-based maintenance program, where the hands-on maintenance intervals are adjusted to reflect the known and reported condition of the relevant devices. For a performance-based maintenance program, it ascertains where the hands-on maintenance intervals are adjusted to reflect the historical performance of the relevant devices.

Applicability of Standards in Project

Transmission Owners
Generator Owners
Distribution Providers

Standards Development Process

The Standard Processes Manual contains all the procedures governing the standards development process. The success of the NERC standards development process depends on stakeholder participation. We extend our thanks to all those who participate. For more information or assistance, please contact Monica Benson at monica.benson@nerc.net.

For more information or assistance, please contact Monica Benson, Standards Process Administrator, at monica.benson@nerc.net or at 609.452.8060.

North American Electric Reliability Corporation
116-390 Village Blvd.
Princeton, NJ 08540
609.452.8060 | www.nerc.com

NERC
NORTH AMERICAN ELECTRIC RELIABILITY CORPORATION

Standards Announcement

Successive Ballot Results

Project 2007-17 – Protection System Maintenance and Testing

Now available at: https://standards.nerc.net/Ballots.aspx

Successive Ballot and Non-binding Poll Results for PRC-005-2 – Protection System Maintenance
A successive ballot for the proposed standard, PRC-005-2 — Protection System Maintenance, ended on December 20, 2010. A non-binding poll of the proposed Violation Risk Factors (VRFs) and Violation Severity Levels (VSLs) also ended on December 20, 2010. Voting and poll statistics are listed below, and the Ballot Results Web page provides a link to the detailed results.

Ballot for Standard:

- Quorum: 79.88 %
- Approval: 44.65%

Non-binding Poll for VRFs and VSLs:

- Quorum: 78.06 %
- Supportive Opinion: 52.73%

Next Steps – Successive Ballot and Non-binding Poll of VRFs and VSLs
The drafting team will consider all comments (those submitted with a comment form, and those submitted with a ballot or with the non-binding poll) and will determine whether to make additional changes to the standard and its implementation plan.

Project Background
The proposed PRC-005-2 – Protection System Maintenance standard addresses FERC directives from FERC Order 693, as well as issues identified by stakeholders. In accordance with the FERC directives, this draft standard establishes requirements for a time-based maintenance program, where all relevant devices are maintained according to prescribed maximum intervals. It further establishes requirements for a condition-based maintenance program, where the hands-on maintenance intervals are adjusted to reflect the known and reported condition of the relevant devices. For a performance-based maintenance program, it ascertains where the hands-on maintenance intervals are adjusted to reflect the historical performance of the relevant devices.

More information can be found on the project page:

http://www.nerc.com/filez/standards/Protection_System_Maintenance_Project_2007-17.html

Ballot Criteria
Approval requires both (1) a quorum, which is established by at least 75% of the members of the ballot pool submitting either an affirmative vote, a negative vote, or an abstention, and (2) a two-thirds majority of the

weighted segment votes cast must be affirmative; the number of votes cast is the sum of affirmative and negative votes, excluding abstentions and non-responses.

Non-Binding Polls

Non-binding polls of VRFs and VSLs are conducted to provide the drafting team with constructive feedback on proposed VRFs and VSLs and also to provide information to assist in developing a recommendation for Board of Trustees approval.

Standards Development Process

The Standard Processes Manual contains all the procedures governing the standards development process. The success of the NERC standards development process depends on stakeholder participation. We extend our thanks to all those who participate. For more information or assistance, please contact Monica Benson at monica.benson@nerc.net.

For more information or assistance, please contact Monica Benson, Standards Process Administrator, at monica.benson@nerc.net or at 609.452.8060.

North American Electric Reliability Corporation
116-390 Village Blvd.
Princeton, NJ 08540
609.452.8060 | www.nerc.com

User Name

Password

Log in

Register

-Ballot Pools
-Current Ballots
-Ballot Results
-Registered Ballot Body
-Proxy Voters

Home Page

Ballot Results

Ballot Name:	Project 2007-17 Protection System Maintenance and Testing (PRC-005-2)_sb_in
Ballot Period:	12/10/2010 - 12/20/2010
Ballot Type:	Initial
Total # Votes:	258
Total Ballot Pool:	323
Quorum:	**79.88 % The Quorum has been reached**
Weighted Segment Vote:	44.65 %
Ballot Results:	**The standard will proceed to recirculation ballot.**

Summary of Ballot Results

Segment	Ballot Pool	Segment Weight	Affirmative # Votes	Affirmative Fraction	Negative # Votes	Negative Fraction	Abstain # Votes	No Vote
1 - Segment 1.	89	1	30	0.429	40	0.571	6	13
2 - Segment 2.	9	0.2	1	0.1	1	0.1	2	5
3 - Segment 3.	71	1	23	0.404	34	0.596	4	10
4 - Segment 4.	24	1	9	0.409	13	0.591	0	2
5 - Segment 5.	68	1	19	0.404	28	0.596	5	16
6 - Segment 6.	38	1	5	0.167	25	0.833	0	8
7 - Segment 7.	0	0	0	0	0	0	0	0
8 - Segment 8.	11	0.5	3	0.3	2	0.2	1	5
9 - Segment 9.	6	0.3	3	0.3	0	0	1	2
10 - Segment 10.	7	0.3	3	0.3	0	0	0	4
Totals	**323**	**6.3**	**96**	**2.813**	**143**	**3.487**	**19**	**65**

Individual Ballot Pool Results

Segment	Organization	Member	Ballot	Comments
1	Allegheny Power	Rodney Phillips	Negative	View
1	Ameren Services	Kirit S. Shah	Negative	View
1	American Electric Power	Paul B. Johnson	Negative	View
1	American Transmission Company, LLC	Jason Shaver	Negative	View
1	Arizona Public Service Co.	Robert D Smith	Affirmative	
1	Associated Electric Cooperative, Inc.	John Bussman	Negative	View
1	Avista Corp.	Scott Kinney	Affirmative	

1	Baltimore Gas & Electric Company	John J. Moraski		
1	BC Transmission Corporation	Gordon Rawlings	Affirmative	
1	Beaches Energy Services	Joseph S. Stonecipher	Negative	View
1	Black Hills Corp	Eric Egge		
1	Bonneville Power Administration	Donald S. Watkins	Negative	View
1	CenterPoint Energy	Paul Rocha	Negative	View
1	Central Maine Power Company	Brian Conroy		
1	City of Vero Beach	Randall McCamish		
1	City Utilities of Springfield, Missouri	Jeff Knottek	Affirmative	
1	Clark Public Utilities	Jack Stamper	Negative	View
1	Cleco Power LLC	Danny McDaniel	Negative	View
1	Colorado Springs Utilities	Paul Morland	Negative	View
1	Commonwealth Edison Co.	Daniel Brotzman		
1	Consolidated Edison Co. of New York	Christopher L de Graffenried	Negative	View
1	Dairyland Power Coop.	Robert W. Roddy	Negative	View
1	Dayton Power & Light Co.	Hertzel Shamash	Affirmative	
1	Deseret Power	James Tucker		
1	Dominion Virginia Power	John K Loftis	Negative	View
1	Duke Energy Carolina	Douglas E. Hils	Negative	
1	East Kentucky Power Coop.	George S. Carruba	Affirmative	
1	Empire District Electric Co.	Ralph Frederick Meyer	Affirmative	
1	Entergy Corporation	George R. Bartlett	Negative	View
1	FirstEnergy Energy Delivery	Robert Martinko	Negative	View
1	Florida Keys Electric Cooperative Assoc.	Dennis Minton	Negative	
1	Gainesville Regional Utilities	Luther E. Fair	Affirmative	
1	GDS Associates, Inc.	Claudiu Cadar	Abstain	
1	Georgia Transmission Corporation	Harold Taylor, II	Affirmative	
1	Great River Energy	Gordon Pietsch	Negative	View
1	Hydro One Networks, Inc.	Ajay Garg	Negative	View
1	Idaho Power Company	Ronald D. Schellberg	Affirmative	
1	International Transmission Company Holdings Corp	Michael Moltane	Negative	View
1	Kansas City Power & Light Co.	Michael Gammon	Affirmative	
1	Keys Energy Services	Stan T. Rzad	Negative	View
1	Lake Worth Utilities	Walt Gill	Negative	View
1	Lakeland Electric	Larry E Watt	Negative	View
1	Lincoln Electric System	Doug Bantam	Affirmative	
1	Long Island Power Authority	Robert Ganley		
1	Lower Colorado River Authority	Martyn Turner	Affirmative	
1	Manitoba Hydro	Joe D Petaski	Negative	View
1	Metropolitan Water District of Southern California	Ernest Hahn	Abstain	
1	MidAmerican Energy Co.	Terry Harbour	Negative	View
1	Minnesota Power, Inc.	Randi Woodward	Abstain	
1	National Grid	Saurabh Saksena	Negative	View
1	Nebraska Public Power District	Richard L. Koch	Negative	View
1	New York Power Authority	Arnold J. Schuff		
1	Northeast Utilities	David H. Boguslawski	Negative	View
1	NorthWestern Energy	John Canavan	Abstain	
1	Ohio Valley Electric Corp.	Robert Mattey	Affirmative	
1	Oklahoma Gas and Electric Co.	Marvin E VanBebber	Affirmative	
1	Omaha Public Power District	Douglas G Peterchuck	Negative	View
1	Orlando Utilities Commission	Brad Chase	Affirmative	
1	Otter Tail Power Company	Lawrence R. Larson		
1	Pacific Gas and Electric Company	Chifong L. Thomas	Negative	View
1	PacifiCorp	Mark Sampson		
1	PECO Energy	Ronald Schloendorn	Negative	
1	Platte River Power Authority	John C. Collins	Affirmative	
1	Potomac Electric Power Co.	David Thorne	Affirmative	
1	PowerSouth Energy Cooperative	Larry D. Avery	Affirmative	
1	PPL Electric Utilities Corp.	Brenda L Truhe	Negative	View
1	Public Service Company of New Mexico	Laurie Williams	Abstain	
1	Public Service Electric and Gas Co.	Kenneth D. Brown	Negative	View
1	Public Utility District No. 1 of Chelan County	Chad Bowman	Affirmative	
1	Puget Sound Energy, Inc.	Catherine Koch	Abstain	
1	Sacramento Municipal Utility District	Tim Kelley	Affirmative	
1	Salt River Project	Robert Kondziolka	Affirmative	

1	Santee Cooper	Terry L. Blackwell	Negative	
1	SCE&G	Henry Delk, Jr.	Affirmative	
1	Seattle City Light	Pawel Krupa	Negative	View
1	South Texas Electric Cooperative	Richard McLeon	Affirmative	
1	Southern California Edison Co.	Dana Cabbell	Affirmative	
1	Southern Company Services, Inc.	Horace Stephen Williamson	Negative	View
1	Southern Illinois Power Coop.	William G. Hutchison		
1	Southwest Transmission Cooperative, Inc.	James L. Jones	Affirmative	
1	Southwestern Power Administration	Gary W Cox	Affirmative	
1	Sunflower Electric Power Corporation	Noman Lee Williams		
1	Tennessee Valley Authority	Larry Akens	Negative	View
1	Tri-State G & T Association, Inc.	Keith V. Carman	Affirmative	
1	Tucson Electric Power Co.	John Tolo		
1	United Illuminating Co.	Jonathan Appelbaum	Affirmative	
1	Westar Energy	Allen Klassen	Affirmative	
1	Western Area Power Administration	Brandy A Dunn	Negative	View
1	Xcel Energy, Inc.	Gregory L Pieper	Negative	View
2	Alberta Electric System Operator	Mark B Thompson	Abstain	
2	BC Transmission Corporation	Faramarz Amjadi		
2	Electric Reliability Council of Texas, Inc.	Chuck B Manning		
2	Independent Electricity System Operator	Kim Warren	Negative	View
2	ISO New England, Inc.	Kathleen Goodman	Affirmative	
2	Midwest ISO, Inc.	Jason L Marshall		
2	New York Independent System Operator	Gregory Campoli		
2	PJM Interconnection, L.L.C.	Tom Bowe	Abstain	
2	Southwest Power Pool	Charles H Yeung		
3	Alabama Power Company	Richard J. Mandes	Negative	View
3	Allegheny Power	Bob Reeping	Negative	View
3	Ameren Services	Mark Peters		
3	American Electric Power	Raj Rana	Negative	View
3	Arizona Public Service Co.	Thomas R. Glock		
3	Atlantic City Electric Company	James V. Petrella	Affirmative	
3	BC Hydro and Power Authority	Pat G. Harrington	Affirmative	
3	Bonneville Power Administration	Rebecca Berdahl	Negative	View
3	Central Lincoln PUD	Steve Alexanderson	Affirmative	View
3	City of Bartow, Florida	Matt Culverhouse	Abstain	
3	City of Clewiston	Lynne Mila	Negative	
3	City of Farmington	Linda R. Jacobson	Affirmative	
3	City of Green Cove Springs	Gregg R Griffin	Negative	View
3	City of Leesburg	Phil Janik		
3	ComEd	Bruce Krawczyk	Negative	View
3	Consolidated Edison Co. of New York	Peter T Yost	Negative	View
3	Consumers Energy	David A. Lapinski	Negative	View
3	Cowlitz County PUD	Russell A Noble	Affirmative	
3	Delmarva Power & Light Co.	Michael R. Mayer	Affirmative	
3	Detroit Edison Company	Kent Kujala	Affirmative	
3	Dominion Resources Services	Michael F Gildea	Negative	View
3	Duke Energy Carolina	Henry Ernst-Jr	Negative	View
3	East Kentucky Power Coop.	Sally Witt	Affirmative	
3	Entergy	Joel T Plessinger	Negative	View
3	FirstEnergy Solutions	Kevin Querry	Negative	View
3	Florida Power Corporation	Lee Schuster	Negative	View
3	Gainesville Regional Utilities	Kenneth Simmons	Negative	
3	Georgia Power Company	Anthony L Wilson	Negative	View
3	Georgia System Operations Corporation	R Scott S. Barfield-McGinnis	Affirmative	
3	Great River Energy	Sam Kokkinen		
3	Gulf Power Company	Gwen S Frazier		
3	Hydro One Networks, Inc.	Michael D. Penstone	Negative	View
3	JEA	Garry Baker	Negative	View
3	Kansas City Power & Light Co.	Charles Locke	Affirmative	
3	Kissimmee Utility Authority	Gregory David Woessner	Negative	
3	Lakeland Electric	Mace Hunter	Negative	View
3	Lincoln Electric System	Bruce Merrill	Affirmative	View
3	Los Angeles Department of Water & Power	Kenneth Silver		
3	Louisville Gas and Electric Co.	Charles A. Freibert	Negative	View
3	Manitoba Hydro	Greg C. Parent	Negative	View
3	MEAG Power	Steven Grego	Affirmative	

3	MidAmerican Energy Co.	Thomas C. Mielnik	Negative	
3	Mississippi Power	Don Horsley	Negative	View
3	Municipal Electric Authority of Georgia	Steven M. Jackson	Affirmative	
3	Muscatine Power & Water	John S Bos	Affirmative	
3	New York Power Authority	Marilyn Brown	Affirmative	
3	Niagara Mohawk (National Grid Company)	Michael Schiavone	Negative	View
3	Northern Indiana Public Service Co.	William SeDoris	Negative	
3	Ocala Electric Utility	David T. Anderson	Negative	
3	Orlando Utilities Commission	Ballard Keith Mutters	Affirmative	
3	PacifiCorp	John Apperson	Affirmative	
3	PECO Energy an Exelon Co.	Vincent J. Catania		
3	Platte River Power Authority	Terry L Baker	Affirmative	
3	Potomac Electric Power Co.	Robert Reuter		
3	Progress Energy Carolinas	Sam Waters	Negative	View
3	Public Service Electric and Gas Co.	Jeffrey Mueller	Negative	View
3	Public Utility District No. 1 of Chelan County	Kenneth R. Johnson	Abstain	
3	Public Utility District No. 2 of Grant County	Greg Lange	Affirmative	
3	Sacramento Municipal Utility District	James Leigh-Kendall	Affirmative	
3	Salem Electric	Anthony Schacher	Negative	View
3	Salt River Project	John T. Underhill	Affirmative	
3	San Diego Gas & Electric	Scott Peterson		
3	Santee Cooper	Zack Dusenbury	Negative	
3	Seattle City Light	Dana Wheelock	Negative	View
3	Southern California Edison Co.	David Schiada	Affirmative	
3	Springfield Utility Board	Jeff Nelson	Abstain	
3	Tampa Electric Co.	Ronald L Donahey		
3	Tri-State G & T Association, Inc.	Janelle Marriott	Affirmative	
3	Wisconsin Electric Power Marketing	James R. Keller	Negative	View
3	Wisconsin Public Service Corp.	Gregory J Le Grave	Abstain	
3	Xcel Energy, Inc.	Michael Ibold	Negative	View
4	Alliant Energy Corp. Services, Inc.	Kenneth Goldsmith	Negative	View
4	American Municipal Power - Ohio	Kevin Koloini	Negative	
4	American Public Power Association	Allen Mosher	Affirmative	
4	City of Clewiston	Kevin McCarthy	Negative	
4	City of New Smyrna Beach Utilities Commission	Timothy Beyrle		
4	Consumers Energy	David Frank Ronk	Negative	View
4	Cowlitz County PUD	Rick Syring	Affirmative	
4	Detroit Edison Company	Daniel Herring	Affirmative	
4	Florida Municipal Power Agency	Frank Gaffney	Negative	View
4	Fort Pierce Utilities Authority	Thomas W. Richards	Negative	View
4	Georgia System Operations Corporation	Guy Andrews	Affirmative	
4	Illinois Municipal Electric Agency	Bob C. Thomas	Negative	View
4	Integrys Energy Group, Inc.	Christopher Plante	Negative	View
4	Madison Gas and Electric Co.	Joseph G. DePoorter	Negative	View
4	Ohio Edison Company	Douglas Hohlbaugh	Negative	View
4	Old Dominion Electric Coop.	Mark Ringhausen	Affirmative	
4	Public Utility District No. 1 of Douglas County	Henry E. LuBean	Affirmative	
4	Public Utility District No. 1 of Snohomish County	John D. Martinsen	Affirmative	View
4	Sacramento Municipal Utility District	Mike Ramirez	Affirmative	
4	Seattle City Light	Hao Li	Negative	View
4	Seminole Electric Cooperative, Inc.	Steven R Wallace	Affirmative	
4	South Mississippi Electric Power Association	Steve McElhaney		
4	Wisconsin Energy Corp.	Anthony Jankowski	Negative	
4	Y-W Electric Association, Inc.	James A Ziebarth	Negative	View
5	AEP Service Corp.	Brock Ondayko		
5	Amerenue	Sam Dwyer	Negative	
5	APS	Mel Jensen	Affirmative	
5	Avista Corp.	Edward F. Groce	Affirmative	
5	Black Hills Corp	George Tatar	Affirmative	
5	Bonneville Power Administration	Francis J. Halpin	Negative	View
5	Chelan County Public Utility District #1	John Yale		
5	City of Grand Island	Jeff Mead	Negative	
5	City of Tallahassee	Alan Gale	Abstain	
5	City Water, Light & Power of Springfield	Karl E. Kohlrus		
5	Consolidated Edison Co. of New York	Wilket (Jack) Ng	Negative	View

5	Constellation Power Source Generation, Inc.	Amir Y Hammad	Negative	View
5	Consumers Energy	James B Lewis	Negative	View
5	Cowlitz County PUD	Bob Essex	Affirmative	
5	Dominion Resources, Inc.	Mike Garton	Negative	View
5	Duke Energy	Robert Smith		
5	Dynegy Inc.	Dan Roethemeyer	Negative	
5	East Kentucky Power Coop.	Stephen Ricker	Affirmative	
5	Energy Northwest - Columbia Generating Station	Doug Ramey	Affirmative	
5	Entegra Power Group, LLC	Kenneth Parker	Abstain	
5	Entergy Corporation	Stanley M Jaskot	Negative	View
5	FirstEnergy Solutions	Kenneth Dresner	Negative	View
5	Florida Municipal Power Agency	David Schumann	Negative	View
5	Green Country Energy	Greg Froehling	Affirmative	
5	Horizon Wind Energy	Brent Hebert	Affirmative	
5	Indeck Energy Services, Inc.	Rex A Roehl	Negative	View
5	JEA	Donald Gilbert	Abstain	
5	Kansas City Power & Light Co.	Scott Heidtbrink		
5	Kissimmee Utility Authority	Mike Blough	Affirmative	
5	Lakeland Electric	Thomas J Trickey	Negative	
5	Liberty Electric Power LLC	Daniel Duff		
5	Lincoln Electric System	Dennis Florom	Affirmative	View
5	Louisville Gas and Electric Co.	Charlie Martin		
5	Luminant Generation Company LLC	Mike Laney	Negative	View
5	Manitoba Hydro	Mark Aikens		
5	Massachusetts Municipal Wholesale Electric Company	David Gordon	Abstain	
5	New Harquahala Generating Co. LLC	Nicholas Q Hayes		
5	New York Power Authority	Gerald Mannarino		
5	Northern Indiana Public Service Co.	Michael K Wilkerson	Negative	
5	Otter Tail Power Company	Stacie Hebert		
5	PacifiCorp	Sandra L. Shaffer	Affirmative	
5	Portland General Electric Co.	Gary L Tingley	Affirmative	
5	PowerSouth Energy Cooperative	Tim Hattaway		
5	PPL Generation LLC	Mark A Heimbach		
5	Progress Energy Carolinas	Wayne Lewis	Negative	View
5	PSEG Power LLC	Jerzy A Slusarz	Negative	View
5	Public Utility District No. 1 of Lewis County	Steven Grega	Negative	View
5	Reedy Creek Energy Services	Bernie Budnik		
5	RRI Energy	Thomas J. Bradish	Abstain	
5	Sacramento Municipal Utility District	Bethany Hunter	Affirmative	
5	Salt River Project	Glen Reeves	Affirmative	
5	San Diego Gas & Electric	Daniel Baerman		
5	Santee Cooper	Lewis P Pierce	Negative	
5	Seattle City Light	Michael J. Haynes	Negative	View
5	Seminole Electric Cooperative, Inc.	Brenda K. Atkins	Affirmative	
5	South Carolina Electric & Gas Co.	Richard Jones	Affirmative	
5	South Mississippi Electric Power Association	Jerry W Johnson		
5	Southern Company Generation	William D Shultz	Negative	View
5	Tampa Electric Co.	RJames Rocha	Affirmative	
5	Tenaska, Inc.	Scott M. Helyer	Negative	
5	Tennessee Valley Authority	George T. Ballew	Negative	View
5	TransAlta Centralia Generation, LLC	Joanna Luong-Tran	Affirmative	
5	Tri-State G & T Association, Inc.	Barry Ingold	Affirmative	
5	U.S. Army Corps of Engineers	Melissa Kurtz	Negative	View
5	U.S. Bureau of Reclamation	Martin Bauer P.E.	Negative	View
5	Wisconsin Electric Power Co.	Linda Horn	Negative	View
5	Wisconsin Public Service Corp.	Leonard Rentmeester	Negative	View
5	Xcel Energy, Inc.	Liam Noailles	Negative	View
6	AEP Marketing	Edward P. Cox	Negative	View
6	Ameren Energy Marketing Co.	Jennifer Richardson	Negative	
6	Bonneville Power Administration	Brenda S. Anderson	Negative	View
6	Cleco Power LLC	Matthew D Cripps	Negative	View
6	Consolidated Edison Co. of New York	Nickesha P Carrol	Negative	View
6	Constellation Energy Commodities Group	Brenda Powell	Negative	View
6	Dominion Resources, Inc.	Louis S Slade	Negative	View
6	Duke Energy Carolina	Walter Yeager	Negative	

6	Entergy Services, Inc.	Terri F Benoit	Negative	View
6	Eugene Water & Electric Board	Daniel Mark Bedbury	Affirmative	
6	Exelon Power Team	Pulin Shah	Negative	
6	FirstEnergy Solutions	Mark S Travaglianti	Negative	View
6	Florida Municipal Power Agency	Richard L. Montgomery	Negative	View
6	Florida Municipal Power Pool	Thomas E Washburn	Negative	View
6	Florida Power & Light Co.	Silvia P Mitchell	Negative	View
6	Great River Energy	Donna Stephenson		
6	Kansas City Power & Light Co.	Jessica L Klinghoffer	Affirmative	
6	Lakeland Electric	Paul Shipps	Negative	View
6	Lincoln Electric System	Eric Ruskamp	Affirmative	View
6	Louisville Gas and Electric Co.	Daryn Barker		
6	Luminant Energy	Brad Jones	Negative	View
6	Manitoba Hydro	Daniel Prowse	Negative	View
6	New York Power Authority	Thomas Papadopoulos		
6	Northern Indiana Public Service Co.	Joseph O'Brien	Negative	View
6	Omaha Public Power District	David Ried	Negative	
6	OTP Wholesale Marketing	Bruce Glorvigen		
6	Platte River Power Authority	Carol Ballantine	Affirmative	
6	Progress Energy	John T Sturgeon	Negative	
6	PSEG Energy Resources & Trade LLC	James D. Hebson	Negative	View
6	Public Utility District No. 1 of Chelan County	Hugh A. Owen		
6	RRI Energy	Trent Carlson		
6	Santee Cooper	Suzanne Ritter	Negative	
6	Seattle City Light	Dennis Sismaet	Negative	View
6	Seminole Electric Cooperative, Inc.	Trudy S. Novak	Affirmative	
6	South Carolina Electric & Gas Co.	Matt H Bullard		
6	Tennessee Valley Authority	Marjorie S. Parsons	Negative	
6	Western Area Power Administration - UGP Marketing	John Stonebarger		
6	Xcel Energy, Inc.	David F. Lemmons	Negative	View
8		James A Maenner		
8		Merle Ashton	Negative	
8		Roger C Zaklukiewicz	Affirmative	
8		Kristina M. Loudermilk		
8	Ascendant Energy Services, LLC	Raymond Tran		
8	JDRJC Associates	Jim D. Cyrulewski	Affirmative	
8	Pacific Northwest Generating Cooperative	Margaret Ryan	Abstain	
8	Power Energy Group LLC	Peggy Abbadini		
8	SPS Consulting Group Inc.	Jim R Stanton	Negative	View
8	Utility Services, Inc.	Brian Evans-Mongeon	Affirmative	
8	Volkmann Consulting, Inc.	Terry Volkmann		
9	California Energy Commission	William Mitchell Chamberlain		
9	Commonwealth of Massachusetts Department of Public Utilities	Donald E. Nelson	Affirmative	
9	National Association of Regulatory Utility Commissioners	Diane J. Barney		
9	Oregon Public Utility Commission	Jerome Murray	Abstain	
9	Public Service Commission of South Carolina	Philip Riley	Affirmative	
9	Utah Public Service Commission	Ric Campbell	Affirmative	
10	Florida Reliability Coordinating Council	Linda Campbell		
10	Midwest Reliability Organization	Dan R. Schoenecker		
10	New York State Reliability Council	Alan Adamson	Affirmative	
10	Northeast Power Coordinating Council, Inc.	Guy V. Zito		
10	ReliabilityFirst Corporation	Jacquie Smith		
10	SERC Reliability Corporation	Carter B Edge	Affirmative	
10	Western Electricity Coordinating Council	Louise McCarren	Affirmative	View

Account Log-In/Register

Copyright © 2010 by the North American Electric Reliability Corporation. : All rights reserved.
A New Jersey Nonprofit Corporation

NERC
NORTH AMERICAN ELECTRIC RELIABILITY CORPORATION

Non-binding Poll Results	
Non-binding Poll Name:	Project 2007-17 Protection System Maintenance - Non-binding Poll for VRFs and VSLs_nb2 _in
Poll Period:	12/10/2010 - 12/20/2010
Total # Opinions:	274
Total Ballot Pool:	351
Summary:	78% of those who registered to participate provided an opinion; 53% of those who provided an opinion indicated support for the VRFs and VSLs that were proposed.

Individual Ballot Pool Results

Segment	Organization	Member	Opinions	Comments
1	Allegheny Power	Rodney Phillips	Affirmative	
1	Ameren Services	Kirit S. Shah	Negative	View
1	American Electric Power	Paul B. Johnson	Negative	View
1	American Transmission Company, LLC	Jason Shaver		
1	Arizona Public Service Co.	Robert D Smith	Abstain	
1	Associated Electric Cooperative, Inc.	John Bussman	Abstain	
1	Avista Corp.	Scott Kinney	Affirmative	
1	Baltimore Gas & Electric Company	John J. Moraski		
1	BC Transmission Corporation	Gordon Rawlings	Affirmative	
1	Beaches Energy Services	Joseph S. Stonecipher	Abstain	View
1	Black Hills Corp	Eric Egge	Affirmative	
1	Bonneville Power Administration	Donald S. Watkins	Abstain	
1	CenterPoint Energy	Paul Rocha	Negative	
1	Central Maine Power Company	Brian Conroy		

1	City of Vero Beach	Randall McCamish		
1	City Utilities of Springfield, Missouri	Jeff Knottek	Affirmative	
1	Clark Public Utilities	Jack Stamper	Affirmative	
1	Cleco Power LLC	Danny McDaniel	Negative	
1	Colorado Springs Utilities	Paul Morland	Negative	
1	Commonwealth Edison Co.	Daniel Brotzman		
1	Consolidated Edison Co. of New York	Christopher L de Graffenried	Negative	View
1	Dairyland Power Coop.	Robert W. Roddy	Abstain	
1	Dayton Power & Light Co.	Hertzel Shamash	Affirmative	
1	Deseret Power	James Tucker		
1	Dominion Virginia Power	John K Loftis	Negative	View
1	Duke Energy Carolina	Douglas E. Hils	Negative	
1	East Kentucky Power Coop.	George S. Carruba	Affirmative	
1	Empire District Electric Co.	Ralph Frederick Meyer	Affirmative	
1	Entergy Corporation	George R. Bartlett	Abstain	
1	FirstEnergy Energy Delivery	Robert Martinko	Negative	View
1	Florida Keys Electric Cooperative Assoc.	Dennis Minton	Negative	
1	Gainesville Regional Utilities	Luther E. Fair	Affirmative	
1	GDS Associates, Inc.	Claudiu Cadar	Abstain	
1	Georgia Transmission Corporation	Harold Taylor, II	Affirmative	
1	Great River Energy	Gordon Pietsch		
1	Hydro One Networks, Inc.	Ajay Garg	Negative	View
1	Idaho Power Company	Ronald D. Schellberg	Affirmative	

1	International Transmission Company Holdings Corp	Michael Moltane	Abstain	
1	Kansas City Power & Light Co.	Michael Gammon	Affirmative	
1	Keys Energy Services	Stan T. Rzad	Negative	
1	Lake Worth Utilities	Walt Gill	Negative	View
1	Lakeland Electric	Larry E Watt	Negative	View
1	Lee County Electric Cooperative	John W Delucca	Abstain	
1	Lincoln Electric System	Doug Bantam	Affirmative	
1	Long Island Power Authority	Robert Ganley	Negative	
1	Lower Colorado River Authority	Martyn Turner	Affirmative	
1	Manitoba Hydro	Joe D Petaski	Negative	View
1	Metropolitan Water District of Southern California	Ernest Hahn	Abstain	
1	MidAmerican Energy Co.	Terry Harbour	Negative	
1	National Grid	Saurabh Saksena		
1	Nebraska Public Power District	Richard L. Koch	Negative	View
1	New York Power Authority	Arnold J. Schuff		
1	Northeast Utilities	David H. Boguslawski	Affirmative	
1	NorthWestern Energy	John Canavan	Abstain	
1	Ohio Valley Electric Corp.	Robert Mattey	Negative	
1	Oklahoma Gas and Electric Co.	Marvin E VanBebber	Abstain	
1	Omaha Public Power District	Douglas G Peterchuck	Abstain	
1	Oncor Electric Delivery	Michael T. Quinn	Negative	View
1	Orlando Utilities Commission	Brad Chase	Affirmative	
1	Otter Tail Power Company	Lawrence R. Larson		
1	Pacific Gas and Electric Company	Chifong L. Thomas	Negative	

1	PacifiCorp	Mark Sampson		
1	PECO Energy	Ronald Schloendorn	Negative	
1	Platte River Power Authority	John C. Collins	Affirmative	
1	Portland General Electric Co.	Frank F. Afranji	Affirmative	
1	Potomac Electric Power Co.	David Thorne	Affirmative	
1	PowerSouth Energy Cooperative	Larry D. Avery	Negative	
1	PPL Electric Utilities Corp.	Brenda L Truhe	Abstain	
1	Public Service Company of New Mexico	Laurie Williams	Abstain	
1	Public Service Electric and Gas Co.	Kenneth D. Brown	Abstain	
1	Public Utility District No. 1 of Chelan County	Chad Bowman		
1	Puget Sound Energy, Inc.	Catherine Koch	Abstain	
1	Sacramento Municipal Utility District	Tim Kelley	Abstain	
1	Salt River Project	Robert Kondziolka	Affirmative	
1	Santee Cooper	Terry L. Blackwell	Negative	
1	SCE&G	Henry Delk, Jr.	Abstain	
1	Seattle City Light	Pawel Krupa	Negative	
1	South Texas Electric Cooperative	Richard McLeon	Affirmative	
1	Southern California Edison Co.	Dana Cabbell	Affirmative	
1	Southern Company Services, Inc.	Horace Stephen Williamson	Negative	View
1	Southern Illinois Power Coop.	William G. Hutchison		
1	Southwest Transmission Cooperative, Inc.	James L. Jones	Affirmative	
1	Southwestern Power Administration	Gary W Cox	Affirmative	

1	Sunflower Electric Power Corporation	Noman Lee Williams	Negative	
1	Tennessee Valley Authority	Larry Akens	Abstain	
1	Tri-State G & T Association, Inc.	Keith V. Carman	Affirmative	
1	Tucson Electric Power Co.	John Tolo		
1	United Illuminating Co.	Jonathan Appelbaum	Affirmative	
1	Westar Energy	Allen Klassen	Abstain	
1	Western Area Power Administration	Brandy A Dunn	Negative	
1	Xcel Energy, Inc.	Gregory L Pieper		
2	Alberta Electric System Operator	Jason L. Murray		
2	BC Transmission Corporation	Faramarz Amjadi		
2	Electric Reliability Council of Texas, Inc.	Chuck B Manning		
2	Independent Electricity System Operator	Kim Warren	Negative	View
2	ISO New England, Inc.	Kathleen Goodman		
2	Midwest ISO, Inc.	Jason L Marshall	Negative	View
2	New York Independent System Operator	Gregory Campoli		
2	PJM Interconnection, L.L.C.	Tom Bowe	Abstain	
2	Southwest Power Pool	Charles H Yeung	Abstain	
3	Alabama Power Company	Richard J. Mandes	Negative	View
3	Allegheny Power	Bob Reeping	Affirmative	
3	Ameren Services	Mark Peters		
3	American Electric Power	Raj Rana	Negative	View
3	Arizona Public Service Co.	Thomas R. Glock		
3	Atlantic City Electric Company	James V. Petrella	Affirmative	

3	BC Hydro and Power Authority	Pat G. Harrington	Abstain	
3	Blachly-Lane Electric Co-op	Bud Tracy	Affirmative	
3	Bonneville Power Administration	Rebecca Berdahl	Abstain	
3	Central Electric Cooperative, Inc. (Redmond, Oregon)	Dave Markham	Affirmative	
3	Central Lincoln PUD	Steve Alexanderson	Affirmative	
3	City of Bartow, Florida	Matt Culverhouse	Abstain	
3	City of Clewiston	Lynne Mila	Negative	
3	City of Farmington	Linda R. Jacobson	Affirmative	
3	City of Green Cove Springs	Gregg R Griffin	Negative	View
3	City of Leesburg	Phil Janik		
3	Clearwater Power Co.	Dave Hagen	Affirmative	
3	Cleco Utility Group	Bryan Y Harper	Negative	
3	ComEd	Bruce Krawczyk	Negative	
3	Consolidated Edison Co. of New York	Peter T Yost	Abstain	
3	Consumers Energy	David A. Lapinski	Negative	
3	Consumers Power Inc.	Roman Gillen	Affirmative	
3	Coos-Curry Electric Cooperative, Inc	Roger Meader	Affirmative	
3	Cowlitz County PUD	Russell A Noble	Affirmative	
3	Delmarva Power & Light Co.	Michael R. Mayer	Affirmative	
3	Detroit Edison Company	Kent Kujala	Affirmative	
3	Dominion Resources Services	Michael F Gildea	Negative	View
3	Douglas Electric Cooperative	Dave Sabala	Affirmative	
3	Duke Energy Carolina	Henry Ernst-Jr	Negative	
3	East Kentucky Power Coop.	Sally Witt	Affirmative	

3	Entergy	Joel T Plessinger	Abstain	
3	Fall River Rural Electric Cooperative	Bryan Case	Affirmative	
3	FirstEnergy Solutions	Kevin Querry	Negative	View
3	Florida Power Corporation	Lee Schuster	Affirmative	
3	Gainesville Regional Utilities	Kenneth Simmons	Negative	
3	Georgia Power Company	Anthony L Wilson	Negative	View
3	Georgia System Operations Corporation	R Scott S. Barfield-McGinnis	Affirmative	
3	Great River Energy	Sam Kokkinen		
3	Gulf Power Company	Gwen S Frazier		
3	Hydro One Networks, Inc.	Michael D. Penstone	Negative	View
3	JEA	Garry Baker	Abstain	
3	Kansas City Power & Light Co.	Charles Locke	Affirmative	
3	Kissimmee Utility Authority	Gregory David Woessner	Negative	
3	Lakeland Electric	Mace Hunter		
3	Lane Electric Cooperative, Inc.	Rick Crinklaw	Affirmative	
3	Lincoln Electric Cooperative, Inc.	Michael Henry	Affirmative	
3	Lincoln Electric System	Bruce Merrill	Affirmative	
3	Los Angeles Department of Water & Power	Kenneth Silver		
3	Lost River Electric Cooperative	Richard Reynolds	Affirmative	
3	Louisville Gas and Electric Co.	Charles A. Freibert		
3	Manitoba Hydro	Greg C. Parent	Negative	View
3	MEAG Power	Steven Grego	Affirmative	
3	MidAmerican Energy Co.	Thomas C. Mielnik	Negative	

3	Mississippi Power	Don Horsley	Negative	View
3	Municipal Electric Authority of Georgia	Steven M. Jackson	Affirmative	
3	Muscatine Power & Water	John S Bos	Affirmative	
3	New York Power Authority	Marilyn Brown	Affirmative	
3	Niagara Mohawk (National Grid Company)	Michael Schiavone	Abstain	
3	North Carolina Municipal Power Agency #1	Denise Roeder	Abstain	
3	Northern Indiana Public Service Co.	William SeDoris	Negative	
3	Northern Lights Inc.	Jon Shelby	Affirmative	
3	Ocala Electric Utility	David T. Anderson	Negative	
3	Okanogan County Electric Cooperative, Inc.	Ray Ellis	Affirmative	
3	Orlando Utilities Commission	Ballard Keith Mutters	Abstain	
3	OTP Wholesale Marketing	Bradley Tollerson		
3	PacifiCorp	John Apperson		
3	PECO Energy an Exelon Co.	Vincent J. Catania		
3	Platte River Power Authority	Terry L Baker	Affirmative	
3	Potomac Electric Power Co.	Robert Reuter	Affirmative	
3	Progress Energy Carolinas	Sam Waters	Affirmative	
3	Public Service Electric and Gas Co.	Jeffrey Mueller	Abstain	
3	Public Utility District No. 1 of Chelan County	Kenneth R. Johnson	Abstain	
3	Public Utility District No. 2 of Grant County	Greg Lange	Affirmative	
3	Raft River Rural Electric Cooperative	Heber Carpenter	Affirmative	

3	Sacramento Municipal Utility District	James Leigh-Kendall	Abstain	
3	Salem Electric	Anthony Schacher	Affirmative	
3	Salmon River Electric Cooperative	Ken Dizes	Affirmative	
3	Salt River Project	John T. Underhill	Affirmative	
3	San Diego Gas & Electric	Scott Peterson		
3	Santee Cooper	Zack Dusenbury	Negative	
3	Seattle City Light	Dana Wheelock	Negative	
3	South Mississippi Electric Power Association	Gary Hutson	Abstain	
3	Southern California Edison Co.	David Schiada	Affirmative	
3	Springfield Utility Board	Jeff Nelson	Abstain	
3	Tampa Electric Co.	Ronald L Donahey		
3	Tri-State G & T Association, Inc.	Janelle Marriott	Affirmative	
3	Umatilla Electric Cooperative	Steve Eldrige	Affirmative	
3	West Oregon Electric Cooperative, Inc.	Marc Farmer	Affirmative	
3	Wisconsin Electric Power Marketing	James R. Keller	Abstain	
3	Wisconsin Public Service Corp.	Gregory J Le Grave	Abstain	
3	Xcel Energy, Inc.	Michael Ibold		
4	Alliant Energy Corp. Services, Inc.	Kenneth Goldsmith	Affirmative	
4	American Municipal Power - Ohio	Kevin Koloini	Negative	
4	American Public Power Association	Allen Mosher	Abstain	
4	City of Clewiston	Kevin McCarthy	Negative	
4	City of New Smyrna Beach Utilities Commission	Timothy Beyrle		
4	Consumers Energy	David Frank Ronk	Negative	View

4	Cowlitz County PUD	Rick Syring	Affirmative	
4	Detroit Edison Company	Daniel Herring	Affirmative	
4	Florida Municipal Power Agency	Frank Gaffney	Negative	View
4	Fort Pierce Utilities Authority	Thomas W. Richards	Negative	View
4	Georgia System Operations Corporation	Guy Andrews	Affirmative	
4	Illinois Municipal Electric Agency	Bob C. Thomas	Abstain	
4	Integrys Energy Group, Inc.	Christopher Plante	Abstain	
4	Madison Gas and Electric Co.	Joseph G. DePoorter	Abstain	
4	Ohio Edison Company	Douglas Hohlbaugh	Negative	View
4	Old Dominion Electric Coop.	Mark Ringhausen	Affirmative	
4	Public Utility District No. 1 of Douglas County	Henry E. LuBean	Affirmative	
4	Public Utility District No. 1 of Snohomish County	John D. Martinsen	Abstain	
4	Sacramento Municipal Utility District	Mike Ramirez	Abstain	
4	Seattle City Light	Hao Li	Negative	
4	Seminole Electric Cooperative, Inc.	Steven R Wallace	Affirmative	
4	South Mississippi Electric Power Association	Steve McElhaney		
4	Wisconsin Energy Corp.	Anthony Jankowski	Abstain	
4	Y-W Electric Association, Inc.	James A Ziebarth	Abstain	
5	AEP Service Corp.	Brock Ondayko		
5	Amerenue	Sam Dwyer	Negative	
5	APS	Mel Jensen	Abstain	
5	Avista Corp.	Edward F. Groce	Affirmative	
5	BC Hydro and Power Authority	Clement Ma	Affirmative	

5	Black Hills Corp	George Tatar	Affirmative	
5	Bonneville Power Administration	Francis J. Halpin	Negative	
5	Chelan County Public Utility District #1	John Yale		
5	City of Grand Island	Jeff Mead	Abstain	
5	City of Tallahassee	Alan Gale	Abstain	
5	City Water, Light & Power of Springfield	Karl E. Kohlrus		
5	Consolidated Edison Co. of New York	Wilket (Jack) Ng	Negative	View
5	Constellation Power Source Generation, Inc.	Amir Y Hammad	Negative	View
5	Consumers Energy	James B Lewis	Negative	View
5	Cowlitz County PUD	Bob Essex	Affirmative	
5	Dominion Resources, Inc.	Mike Garton	Negative	View
5	Duke Energy	Robert Smith		
5	Dynegy Inc.	Dan Roethemeyer	Affirmative	
5	East Kentucky Power Coop.	Stephen Ricker	Affirmative	
5	Energy Northwest - Columbia Generating Station	Doug Ramey	Affirmative	
5	Entegra Power Group, LLC	Kenneth Parker	Abstain	
5	Entergy Corporation	Stanley M Jaskot	Abstain	
5	Exelon Nuclear	Michael Korchynsky	Negative	
5	ExxonMobil Research and Engineering	Martin Kaufman	Abstain	
5	FirstEnergy Solutions	Kenneth Dresner	Negative	View
5	Florida Municipal Power Agency	David Schumann	Negative	View
5	Great River Energy	Cynthia E Sulzer	Negative	

5	Green Country Energy	Greg Froehling	Affirmative	
5	Horizon Wind Energy	Brent Hebert		
5	Indeck Energy Services, Inc.	Rex A Roehl	Negative	View
5	JEA	Donald Gilbert	Affirmative	
5	Kansas City Power & Light Co.	Scott Heidtbrink		
5	Kissimmee Utility Authority	Mike Blough	Affirmative	
5	Lakeland Electric	Thomas J Trickey	Negative	
5	Liberty Electric Power LLC	Daniel Duff		
5	Lincoln Electric System	Dennis Florom	Affirmative	
5	Louisville Gas and Electric Co.	Charlie Martin		
5	Luminant Generation Company LLC	Mike Laney	Negative	View
5	Manitoba Hydro	Mark Aikens		
5	Massachusetts Municipal Wholesale Electric Company	David Gordon	Abstain	
5	New Harquahala Generating Co. LLC	Nicholas Q Hayes		
5	New York Power Authority	Gerald Mannarino		
5	Northern Indiana Public Service Co.	Michael K Wilkerson	Negative	
5	Otter Tail Power Company	Stacie Hebert		
5	Pacific Gas and Electric Company	Richard J. Padilla		
5	PacifiCorp	Sandra L. Shaffer	Abstain	
5	Portland General Electric Co.	Gary L Tingley	Affirmative	
5	PowerSouth Energy Cooperative	Tim Hattaway		
5	PPL Generation LLC	Mark A Heimbach		
5	Progress Energy Carolinas	Wayne Lewis	Affirmative	
5	PSEG Power LLC	Jerzy A Slusarz	Abstain	

5	Public Utility District No. 1 of Lewis County	Steven Grega		
5	Reedy Creek Energy Services	Bernie Budnik		
5	RRI Energy	Thomas J. Bradish	Abstain	
5	Sacramento Municipal Utility District	Bethany Hunter	Abstain	
5	Salt River Project	Glen Reeves	Affirmative	
5	San Diego Gas & Electric	Daniel Baerman		
5	Santee Cooper	Lewis P Pierce	Negative	
5	Seattle City Light	Michael J. Haynes	Abstain	
5	Seminole Electric Cooperative, Inc.	Brenda K. Atkins	Negative	
5	South Carolina Electric & Gas Co.	Richard Jones	Affirmative	
5	South Mississippi Electric Power Association	Jerry W Johnson		
5	Southern Company Generation	William D Shultz	Affirmative	
5	SRW Cogeneration Limited Partnership	Michael Albosta		
5	Tampa Electric Co.	RJames Rocha	Affirmative	
5	Tenaska, Inc.	Scott M. Helyer	Abstain	
5	Tennessee Valley Authority	George T. Ballew	Abstain	
5	TransAlta Centralia Generation, LLC	Joanna Luong-Tran	Abstain	
5	Tri-State G & T Association, Inc.	Barry Ingold	Affirmative	
5	U.S. Army Corps of Engineers	Melissa Kurtz	Affirmative	
5	U.S. Bureau of Reclamation	Martin Bauer P.E.	Negative	View
5	Wisconsin Electric Power Co.	Linda Horn	Abstain	
5	Wisconsin Public Service Corp.	Leonard Rentmeester	Abstain	
5	Xcel Energy, Inc.	Liam Noailles		

6	AEP Marketing	Edward P. Cox	Negative	View
6	Ameren Energy Marketing Co.	Jennifer Richardson	Negative	
6	Bonneville Power Administration	Brenda S. Anderson	Abstain	
6	Cleco Power LLC	Matthew D Cripps	Negative	
6	Consolidated Edison Co. of New York	Nickesha P Carrol	Negative	View
6	Constellation Energy Commodities Group	Brenda Powell	Negative	
6	Dominion Resources, Inc.	Louis S Slade	Negative	View
6	Duke Energy Carolina	Walter Yeager	Negative	
6	Entergy Services, Inc.	Terri F Benoit	Abstain	
6	Eugene Water & Electric Board	Daniel Mark Bedbury		
6	Exelon Power Team	Pulin Shah	Negative	
6	FirstEnergy Solutions	Mark S Travaglianti	Negative	View
6	Florida Municipal Power Pool	Thomas E Washburn	Negative	View
6	Florida Power & Light Co.	Silvia P Mitchell	Affirmative	
6	Great River Energy	Donna Stephenson		
6	Kansas City Power & Light Co.	Thomas Saitta		
6	Lakeland Electric	Paul Shipps	Negative	View
6	Lincoln Electric System	Eric Ruskamp	Affirmative	
6	Louisville Gas and Electric Co.	Daryn Barker		
6	Luminant Energy	Brad Jones	Negative	View
6	Manitoba Hydro	Daniel Prowse	Negative	View
6	New York Power Authority	Thomas Papadopoulos		
6	Northern Indiana Public Service Co.	Joseph O'Brien	Negative	

6	Omaha Public Power District	David Ried	Negative	
6	OTP Wholesale Marketing	Bruce Glorvigen		
6	Platte River Power Authority	Carol Ballantine	Negative	
6	Progress Energy	John T Sturgeon	Affirmative	
6	PSEG Energy Resources & Trade LLC	James D. Hebson	Abstain	
6	Public Utility District No. 1 of Chelan County	Hugh A. Owen	Abstain	
6	RRI Energy	Trent Carlson		
6	Santee Cooper	Suzanne Ritter	Negative	
6	Seattle City Light	Dennis Sismaet	Negative	View
6	Seminole Electric Cooperative, Inc.	Trudy S. Novak	Affirmative	
6	South Carolina Electric & Gas Co.	Matt H Bullard		
6	Tennessee Valley Authority	Marjorie S. Parsons	Negative	
6	Western Area Power Administration - UGP Marketing	John Stonebarger		
6	Xcel Energy, Inc.	David F. Lemmons		
8		Roger C Zaklukiewicz	Affirmative	
8		James A Maenner		
8		Merle Ashton	Negative	
8		Kristina M. Loudermilk		
8	Ascendant Energy Services, LLC	Raymond Tran		
8	JDRJC Associates	Jim D. Cyrulewski	Affirmative	
8	Pacific Northwest Generating Cooperative	Margaret Ryan	Affirmative	
8	Power Energy Group LLC	Peggy Abbadini		
8	SPS Consulting Group Inc.	Jim R Stanton	Abstain	

8	Utility Services, Inc.	Brian Evans-Mongeon	Abstain	
8	Volkmann Consulting, Inc.	Terry Volkmann	Affirmative	
9	California Energy Commission	William Mitchell Chamberlain		
9	Commonwealth of Massachusetts Department of Public Utilities	Donald E. Nelson	Affirmative	
9	National Association of Regulatory Utility Commissioners	Diane J. Barney		
9	North Carolina Utilities Commission	Kimberly J. Jones		
9	Oregon Public Utility Commission	Jerome Murray	Abstain	
9	Public Service Commission of South Carolina	Philip Riley	Affirmative	
9	Utah Public Service Commission	Ric Campbell	Affirmative	
10	Florida Reliability Coordinating Council	Linda Campbell		
10	Midwest Reliability Organization	Dan R. Schoenecker		
10	New York State Reliability Council	Alan Adamson	Affirmative	
10	Northeast Power Coordinating Council, Inc.	Guy V. Zito	Affirmative	
10	ReliabilityFirst Corporation	Jacquie Smith		
10	SERC Reliability Corporation	Carter B Edge	Abstain	
10	Western Electricity Coordinating Council	Louise McCarren	Abstain	

Individual or group. (44 Responses)
Name (25 Responses)
Organization (25 Responses)
Group Name (19 Responses)
Lead Contact (19 Responses)
Question 1 (40 Responses)
Question 1 Comments (44 Responses)
Question 2 (36 Responses)
Question 2 Comments (44 Responses)
Question 3 (39 Responses)
Question 3 Comments (44 Responses)
Question 4 (39 Responses)
Question 4 Comments (44 Responses)
Question 5 (38 Responses)
Question 5 Comments (44 Responses)

Group
Pepco Holding Inc & Affilates
David K Thorne
Yes
Yes
Yes
Yes
Yes
What "specific statistical data" was used to validate that unmonitored communication systems are 24 times more prone to failure than unmonitored protective relays? Comments were previously submitted that the 3 month interval for verifying unmonitored communication systems was much too short. The SDT declined to change the interval and in their response stated: "The 3 month intervals are for unmonitored equipment and are based on experience of the relaying industry represented by the SDT, the SPCTF and review of IEEE PSRC work. Relay communications using power line carrier or leased audio tone circuits are prone to channel failures and are proven to be less reliable than protective relays." The 3 month interval is very burdensome and our experience does not appear to justify. A longer interval should be reconsidered.
Group
Pacific Northwest Small Public Power Utility Comment Group
Steve Alexanderson
Yes
Yes
No
Yes
WECC does not use the definition of the BES that NERC supplied to FERC via http://www.nerc.com/docs/docs/ferc/RM06-16-6-14-07CompFilingPar77ofOrder693FINAL.pdf, so the answer to III.1.3 (page 19-20) is not accurate.
No

Group
Tennessee Valley Authority
Dave Davidson
Yes
No
There is no allowance for deferral of maintenance because of factors beyond the control of the TO, GO, or DP. These include the unavailability of customer outages, generation outages, system configuration, high risk of loss of generation or customer load or impact to power quality. Proposed Change: Provide a process for acceptable deferral of maintenance activities. Table 1-4 Table 1-4 The requirement to perform cell internal ohmic resistance measurements every 18 months for vented lead-acid batteries is excessive. Our normal battery life is 20+ years. A 3-year internal resistance test frequency is adequate to prove battery integrity. IEEE 1188 recommends verification of internal ohmic resistance to be on a quarterly bases. It appears other intervals take into account recommended inspection interval plus some grace period. Proposed Change: Change maintenance interval from 3 months to 6 months. Section: R1.5 This new requirement will require significant documentation with no known improvement to the reliability of the BES. What data is being used to determine the need for this requirement? How far does this requirement go? Table 1-4 requires the inspection of “physical condition of battery rack” What are “identify calibration tolerance or other equivalent parameters” for this task? You already have verify, test, inspect, and calibrate defined. Leave out R1.5 which requires more than meeting the definitions.
No
No
Yes
R4 - “Identification of the resolution” and “Initiation of the resolution” are very distinct activities. In other places in this standard the requirement is for the resolution to be initiated, that is identified in a corrective maintenance work order, “identification of a resolution” requires technical expertise and can be difficult to track and might change over time for a particular problem. Proposed Change: Change “identification” to “initiation” in phrase “including identification of the resolution…”. Overall: NERC is making significant changes to this sizeable standard and only allowing minimum comment period. While this is a good standard that has clearly taken many hours to develop, we are primarily voting “NO” because of the hurried fashion it is being commented, voted, and reviewed.
Individual
Jack Stamper
Clark Public Utilities
No
The SDT has greatly improved the clarity of this document in the areas of relays, communication systems, voltage and current sensing devices, control circuitry, and alarming paths. The recommendations on station dc supply are still confusing. First, there are five different attribute categories for unmonitored dc supply. Are these five categories mutually exclusive? Are we supposed to follow just the category applicable to the type of battery? Are we supposed to follow the first category and any of the subsequent four battery type categories as they apply? I suspect some of the 3 month and 18 month items in the first category are considered to be necessary by the SDT regardless of battery type. The current categorization is confusing. If we are required to perform the 3 month and 18 month activities listed in the first category regardless of battery type AS WELL AS the other applicable battery type activities, please indicate this in Table 1-4. As a different option, just eliminate the first category entirely and place the appropriate 3 month and 18 month verification and inspection requirements in the four battery type specific categories. It may be repetitive but clarity is paramount in this standard. Second, the FAQ examples seem to indicate that the SDT views the performance of an internal ohmic battery test or a battery performance test as valid forms for verifying the individual battery cell states (i.e. state of charge of the individual battery cells/units, battery continuity, battery terminal connection resistance, and battery internal cell-to-cell or unit-to-unit connection resistance). It would be helpful if this were more obviously stated in table 1-4.

Currently it could be interpreted that we need to do all of the individual cell-cell verification in addition to the ohm test or the full performance test. I don't believe this is the intent of the SDT (based on the FAQ examples) but we need to see the intent in Table 1-4. Third, does a monitored dc supply have to monitor some or all of each of the different line items listed? The FAQ examples indicate that if only some are monitored, the dc supply can still be treated as monitored as long as the unmonitored items are verified. This means that for a VLA battery with a low voltage alarm and unintentional ground alarm, all that is needed is to check electrolyte level every 3 months, check float voltage and battery rack every 18 months and perform either an internal ohm check at 18 months or a battery performance test at 6 years. Also battery alarms need to be verified at 6 years. This is not clear in Table 1-4 and it could be interpreted by some that a monitored station dc supply monitors ALL of the listed items not just SOME. The FAQs imply that partial monitoring is acceptable but Table 1-4 does not indicate this very clearly. I do wish to say once again that this proposed standard is much easier to understand and that with a little more clarification in the dc supply section I would vote in the affirmative.
Yes
No
Yes
Provide answers to the following questions. Does the completion of a battery ohm test or a battery performance test satisfy the verification requirements for state of charge of the individual battery cells/units, battery continuity, battery terminal connection resistance, and battery internal cell-to-cell or unit-to-unit connection resistance (where available to measure)?
No
Individual
John Bee
Exelon
Yes
• Clarify what kind of testing is required on lockout relays/86 devices. Specifically, whether functional testing is adequate or if simple calibration, similar to protective relays, is all that is are required. • Clarify if protective relays that trip equipment (e.g., a condensate pump that would in turn cause a main generator trip) are also included in the scope of this Standard. • Clarify if relays which result in generator run back, but do not trip the generator, are included in the scope of this Standard.
Yes
In response to Exelon's comments provided to drafts 1 and 2 of PRC-005, the SDT did not explain why a conflict with an existing regulatory requirement is acceptable. The SDT responded that a conflict does not exist and that the removal of grace periods simply is there to comply with FERC Order directive 693. This response does not answer or address dual regulation by the NRC and by the FERC. Specifically, the request has not been adequately considered for an allowance for NRC-licensed generating units to default to existing Operating License Technical Specification Surveillance Requirements if there is a maintenance interval that would force shutting down a unit prematurely or become non-compliant with PRC-005. Therefore, Exelon requests that the SDT communicate with the NRC and with the FERC to ensure a conflict of dual regulation is not imposed on a nuclear generating unit without the necessary evaluation. In addition, although Exelon Nuclear agrees with the SDT that the maximum allowed battery capacity testing intervals of not to exceed 6 calendar years for vented lead acid or NiCad batteries (not to exceed 3 calendar years for VRLA batteries) could be integrated within the plant's routine 18 month to 2 year interval refueling outage schedule, the SDT has not considered that nuclear refueling outages may be extended past the 18 month to 2 year "normal" periodicity. There are some unique factors related to nuclear generating units that the SDT has not taken into consideration in that these units are typically online continuously between refueling

outages without shutting down for any other required maintenance. Historically, generating units have at times extended planned refueling outage shutdown dates days and even weeks due to requests from transmission operations, fuel issues and electrical demand. Without the grace period exclusion currently allowed by existing maintenance programs, a nuclear plant will be forced to either extend outage duration to include testing on an every other refueling outage (i.e., every four years to ensure compliance for a typical boiling water reactor) or leave the testing on a six year periodicity with the vulnerability of a forced shut down simply to perform maintenance to meet the six year periodicity or a self report of non-compliance. To ensure compliance, the nuclear industry will be forced to schedule battery testing on a four year periodicity to ensure the six year periodicity is met, thus imposing a requirement on nuclear generating units that would not apply to other types of generating units. In addition, Exelon has the following technical comments • Sections 4.2.5.4 and 4.2.5.5 need to clearly state that only protection which affects the BES is within the scope of the PRC-005. • There is not enough clarity in the statement “each protection system component type” for one to stay at the component level vs. dropping to sub-component level. If sub-components reviews are required, the effort becomes unmanageable. Therefore the Standard should identify calibration tolerances or other equivalent parameters. Suggest rewording to "each protection system major component type”
Group
Northeast Power Coordinating Council
Guy Zito
No
The wording “Component Type” is not necessary in each title. Just the equipment category should be listed--what is now shown as “Component Type - Protective Relay”, should be Protective Relay. However, Protective Relay is too general a category. Electromechanical relays, solid state relays, and microprocessor based relays should have their own separate tables. So instead of reading Protective Relay in the title, it should read Electromechanical Relays, etc. This will lengthen the standard, but will simplify reading and referring to the tables, and eliminate confusion when looking for information. The “Note” included in the heading is also not necessary. “Attributes” is also not necessary in the column heading, “Component” suffices.
No
Because all the requirements deal with protective system maintenance and testing, violations could directly cause or contribute to bulk electric system instability, etc., the VRFs should all be “High”. The Time Horizons should all be “Operations Planning” because of the immediacy of a failure to meet the requirements. For the R1 Lower VSL, include a second part to read: Failed to identify calibration tolerances or other equivalent parameters for one Protection System component type that establish acceptable parameters for the conclusion of maintenance activities. For the R1 Moderate VSL, suggest similar wording as for the Lower VSL but specifying two Protection System component types. For the R1 High VSL, suggest changing the wording of the 3rd part to be similar to the Lower VSL to match the requirement and to cater for more than two Protection System component types. For the R3 Severe VSL, in part 3, replace “less” with fewer.
No
Yes
See response to Question 5 below.
Yes
In general, the standard is overly prescriptive and complex. It should not be necessary for a standard at this level to be as detailed and complex as this standard is. Entities working with manufacturers, and knowledge gained from experience can develop adequate maintenance and testing programs. Why are “Relays that respond to non-electrical inputs or impulses (such as, but not limited to, vibration, pressure, seismic, thermal or gas accumulation)…” not included? The output contacts from these devices are oftentimes connected in tripping or control circuits to isolate problem equipment. Due to the critical nature of the trip coil, it must be maintained more frequently if it is not monitored. Trip coils are also considered in the standard as being part of the control circuitry. Table 1-5 has a row labeled “Unmonitored Control circuitry associated with protective functions”, which would include trip coils, has a “Maximum Maintenance Interval” of “12 Calendar Years”. Any control circuit could fail

at any time, but an unmonitored control circuit could fail, and remain undetected for years with the times specified in the Table (it might only be 6 years if I understand that as being the trip test interval specified in the table). Regardless, if a breaker is unable to trip because of control circuit failure, then the system must be operated in real time assuming that that breaker will not trip for a fault or an event, and backup facilities would be called upon to operate. Thus, for a line fault with a "stuck" breaker (a breaker unable to trip), instead of one line tripping, you might have many more lines deloaded or tripped because of a bus having to be cleared because of a breaker failure initiation. The bulk electric system would have to be operated to handle this contingency. In reference to the FAQ document, Section 5 on Station dc Supply, Question K, clarification is needed with respect to dc supplies for communication within the substation. For example, if the communication systems were run off a separate battery in separate area in a substation, would the standard apply to these batteries or not? To define terms only as they are used in PRC-005-2 is inviting confusion. Although they may be unique to PRC-005-2, some or all of them may be used in future standards, some already may be used in existing standards, and may or may not be deliberately defined. Consistency must be maintained, not only for administrative purposes, but for effective technical communications as well. What is the definition of "Maintenance" as used in the table column "Maximum Maintenance Interval"? Maintenance can range from cleaning a relay cover to a full calibration of a relay. A control circuit is not a component, it is made up of components. Sub-requirement 1.5 needs to be clarified. It is not clear what "Identify calibration tolerances or other equivalent parameters…" means, and may be subject to different interpretations by entities and compliance enforcement personnel. In the Implementation plan for Requirement R1, recommend changing "six" to fifteen. This change would restore the 3-month time difference that existed in the previous draft, between the durations of the implementation periods for jurisdictions that do and do not require regulatory approval. It will ensure equity for those entities located in jurisdictions that do not require regulatory approval, as is the case in Ontario. The 'box' for "Monitored Station dc supply…" in Table 1-4 is not clear. It seems to continue to the next page to a new box. There are multiple activities without clear delineation. Regarding station service transformers, Item 4.2.5.5 under Applicability should be deleted. The purpose of this standard is to protect the BES by clearing generator, generator bus faults (or other electrical anomalies associated with the generator) from the BES. Having this standard apply to generator station service transformers, that have no direct connection to the BES, does meet this criteria. The FAQs (III.2.A) discuss how the loss of a station service transformer could cause the loss of a generating unit, but this is not the purpose of PRC-005. Using this logic than any system or device in the power plant that could cause a loss of generation should also be included. This is beyond the scope of the NERC standards. The Drafting Team must respond to the following concerns raised in the FERC NOPR, Docket No. RM10-5-000, Interpretation of Protection System Reliability Standard, December 16, 2010) to "prevent a gap in reliability". • Any component that detects any quantity needed to take an action, or that initiates any control action (initial tripping, reclosing, lockout, etc.) affecting the reliability of the Bulk-Power System should be included as a component of a Protection System, as well as any component or device that is designed to detect defective lines or apparatuses or other power system conditions of an abnormal or dangerous nature and to initiate appropriate control circuit actions. • The exclusion of auxiliary relays will result in a gap in the maintenance and testing of Protection Systems affecting the reliability of the Bulk-Power System. • Excluding the maintenance and testing of reclosing relays will result in a gap in the maintenance and testing of relays affecting the reliability of the Bulk-Power System. • Not establishing the specific requirements relative to the scope and/or methods for a maintenance and testing program for the DC control circuitry that is necessary to ensure proper operation of the Protection System, including voltage and continuity.
Individual
Joe Petaski
Manitoba Hydro
No
The maintenance requirements for batteries listed in Table 1-4 do not appear to be consistent with example 1 in Section V, 1A of the FAQ. Specifically the FAQ does not mention the state of charge of the individual battery cells/units, the battery continuity, the battery terminal connection resistance, the battery internal cell-to-cell or unit-to-unit connection resistance, or the cell condition, which are indicated as 18 month interval tasks in table 1-4.
No

The high VSL for R1 “Failed to include all maintenance activities relevant for the identified monitoring attributes specified in Tables 1-1 through 1-5” may be interpreted in different ways and should be further clarified.
No
Yes
As previously stated, the maintenance requirements for batteries listed in Table 1-4 do not appear to be consistent with example 1 in Section V, 1A of the FAQ. Specifically the FAQ does not mention the state of charge of the individual battery cells/units, the battery continuity, the battery terminal connection resistance, the battery internal cell-to-cell or unit-to-unit connection resistance, or the cell condition which are indicated as 18 month interval tasks in table 1-4.
Yes
1) We disagree with the requirements for battery maintenance outlined in table 1-4. In particular the requirement for a 3 month check on electrolyte level seems too frequent based on our experience. We would like to point out that although IEEE std 450 (which seems to be the basis for table 1-4) does recommend intervals it also states that users should evaluate these recommendations against their own operating experience. 2) Also, the Implementation Plan is not consistent for areas requiring regulatory approval and areas requiring regulatory approval. The 6 month time frame proposed for R1 for areas not requiring regulatory approval is not achievable and is not consistent with areas requiring regulatory approval. To be consistent, the effective date for R1 in jurisdictions where no regulatory approval is required should be the first day of the first calendar quarter 12 months after BOT approval.
Group
Platte River Power Authority System Maintenance
Deborah Schaneman
Yes
No
The 5%, 10%, and 15% levels for R2 & R4 exaggerate the severity levels for small companies. A small DP with only 9 relays in a protection system would only have to be missing 1 record for a severe VSL.
No
No
Yes
Please clarify what is required by R1.5: Identify calibration tolerances or other equivalent parameters for each Protection System component type that establish acceptable parameters for the conclusion of maintenance activities required. Is the intent a brief summary for each component type in the PSMP that would cover all equipment within that component type, or is it a detailed list of each piece of equipment within each component type? The inclusion of dated check-off lists in M4 provides much needed clarity to the list of evidence.
Individual
Dan Roethemeyer
Dynegy Inc.
Yes
No
For R4, the VRF has been changed to high. We question the need to change to high since there are numerous elements that will still protect the system while repairs are being made.
No

No
Yes
For R1.5, we feel to much is being asked for since this information is not easilly controlled and the tolerances vary over time.
Individual
Darryl Curtis
Oncor Electric Delivery Company LLC
Yes
No
Oncor strongly disagrees with the modification to the Violation Severity Levers (VSL) table under the High VSL column where it states that it is a high VSL for “Failed to establish calibration tolerance or equivalent parameters to determine if components are within acceptable parameters.” Oncor feels modifying the standard by adding a requirement that requires a Transmission Owner, Generation Owner or Distribution Provider to “identify calibration tolerances or other equivalent parameters for each Protection System component type that establish acceptable parameters for the conclusion of maintenance activities” is too intrusive and divisive for what it brings to the reliability of the BES. The requirement (Requirement R1 part 1.5) and its associated High VSL should be removed from PRC-005-2.
No
Yes
There is still confusion in Table 1-4 concerning the “Monitored Station dc supply.” The uncertainty is over whither an Owner must have all seven (7) monitoring activities (Station dc supply voltage, State of charge of the individual battery cell/units, Battery continuity of station battery, Cell-to-cell and battery terminal resistance, Electrolyte level of all cells in station battery, Unintentional dc grounds, and Cell/unit internal ohmic values of station battery) listed in the table or just one of them to take advantage of forgoing the maximum maintenance interval for an activity and going to the 6 year maximum maintenance interval to verify that the monitoring device is calibrated. A FAQ concerning this question would be beneficial to those who are concerned that they must monitor all seven activities in order to take advantage of condition based maintenance for the station dc supply. Also an explanation of how each of the 7 monitoring activities relates to a specific station dc supply maintenance activity might be beneficial.
Yes
Comment A: Oncor believes that Requirement R1 Part 1.5 of this Standard should be removed. It is too vague, intrusive, and divisive for what it brings to the reliability of the BES. Specifically it burdens all Transmission Owners, Generation Owners or Distribution Providers with the impossible task of having to “identify calibration tolerances or other equivalent parameters for each Protection System component type that establish acceptable parameters for the conclusion of maintenance activities.” By definition a Protection System component type is “any one of the five specific elements of the Protection System definition” and “a component is any individual discrete piece of equipment included in a Protection System, such as a protective relay or current sensing device.” What Requirement R1 part 1.5 with its associated High VSL in the Standard would decree is that all Transmission Owners, Generation Owners and Distribution Providers who “failed to establish calibration tolerance or equivalent parameters to determine if every individual discrete piece of equipment in a Protection System is within acceptable parameters” would be in violation of the Standard – with a High VSL. Oncor with over 98 years of Protection System maintenance experience feels that most Owners including itself would be non-compliant with this unclear, meddling and disruptive requirement no matter how long the implementation plan for the Standard is. Comment B: Oncor believes that in light of Comment “A” above Requirement R4 Part 4.2 must be modified to remove all references to Requirement R1 Part 1.5 of the Standard. The new requirement should be modified to read “Either verify that the components are within acceptable parameters at the conclusion of the maintenance activities or initiate any necessary activities to correct maintenance correctable issues.” Also in order to assist both the owners and the compliance authorities who may question how one verifies that the

components are within acceptable parameters the FAQ document should be modified to discuss how many utilities are doing this with results that indicate either a pass or fail certified by the qualified persons performing maintenance. Comment C: Oncor feels that the wording “no less frequently than” found in Requirement R4 Parts 4.1.1 and 4.1.2 should be chanced back to the wording in the previous version of the Standard “not to exceed.” Comment D: Oncor recommends that in light of Comment “A” above Measure M1 be modified to remove all reference to Requirement R1 Part 1.5. Comment E: Oncor, as stated in Comment “B” above, recommends that the FAQ document be modified to provide more information on what could be used for evidence that the Transmission Owner, Generation Owner or Distribution Provider has “initiated resolution of identified maintenance correctable issues.” This will assist both the owners and the compliance authorities in answering the question of what constitutes proof that a maintenance correctable issue was identified. Comment F: The second and third paragraphs added under Compliance 1.3 Data Retention provide more information as to what data is required to be retained. Oncor feels that these two paragraphs will help the compliance authorities, the Transmission Owners, Generation Owners and Distribution Providers needed guidance of what is required for data retention.
Individual
Michelle D'Antuono
Ingleside Cogeneration LP
Yes
The tables clearly tie to each component type in a Protection System. This is consistent with the required PSMP format, making it straight forward to incorporate the intervals and to demonstrate compliance.
Yes
Ingleside Cogeneration, LP, believes that the Section 15.5 of the Supplementary Reference “Associated communications equipment (Table 1-2)” properly reflects the intent of the validation of relay-to-relay communications. It states that any “evidence of operational test or documentation of measurement of signal level, reflected power or data-error rates can fulfill the requirements.” However, Table 1-2 – which will be the ultimate reference used by audit teams – only clearly allows for the measurement of channel parameters. Although the newer technology relays provide read-outs of signal level or data-error rates that do not require intrusive testing, older relays do not. The tools required to perform such testing are not easily available – and may leave the communications channel in worse shape after testing than it was prior to testing. We believe that Table 1-2 should be updated to clearly state that an operational test is sufficient for the testing of relay-to-relay communication – consistent with the Supplementary Reference.
The latest version of PRC-005-2 includes a new requirement (R1.5) to identify calibration tolerances or equivalent parameters that must be verified before a maintenance activity is considered complete. Although we understand the project team’s intent, Ingleside Cogeneration LP is concerned that this requirement will lead to multiple interpretations of which tolerances or parameters are the most important. In addition, audit teams may expect to see certain values based upon their own sense of reliability. This is exactly the ambiguity that PRC-005-2 is trying to eliminate. In addition, calibration tolerances and reliability parameters may vary by equipment manufacturer or by configuration. It is not clear that documenting every scenario to demonstrate regulatory compliance is a benefit to BES reliability.
Individual
Scott Berry
Indiana Municipal Power Agency
Yes
No
IMPA does not agree with the percentage in the VSL table for R4. For smaller entities that have six or less of any one type of Protection System Component and they fail, for whatever reason (even if it's a matter of incomplete documentation), to complete scheduled program maintenance on that component they will be subjected to the severe VSL penalty Matrix. Consideration should be given to

entities having less than say, 100 of a component. There should be some type of tiered sub table within the VSL matrix for this consideration - registered entities having a certain component in quantities greater than or equal to 100 and registered entities having quantities of that certain component of less than 100.
No
No
Yes
Standard PRC-005-2 Draft 3 contains a section of "Definitions of Terms Used in Standard" that includes newly defined or revised terms uses in this proposed standard. There are a number of references made to these Terms in the Standard that are not capitalized. IMPA would propose that anywhere that the terms included in the "Definition of Terms Used" are used in the standard that they be capitalized. When any word is not capitalized in a standard then the common practice is to use the Webster Dictionary meaning. IMPA does not know why the SDT is reluctant to put these terms in the NERC Glossary of Terms, but by putting the terms in the glossary it would eliminate any confusion. When these terms are capitalized all registered entities will know that these are defined terms and will be able to consistently apply the definition without confusion. For example: 1.1 Address all Protection System component types. would become 1.1 Address all Protection System Component Types. If these terms are not capitalized in the standard (meaning they are not referring to the defined term) then the meaning of these terms could vary not only from utility to utility but also from Region to Region.
Individual
RoLynda Shumpert
South Carolina Electric and Gas
Yes
Yes
No
No
Individual
Ed Davis
Entergy Services
No
The tables are generally much clearer and the SDT is to be commended on their efforts. However, we believe the Alarming Point Table needs additional clarification with regard to the Maximum Maintenance Interval. If an “alarm producing device” is considered to be a device such as an SCADA RTU, individual entity intervals for such a device would differ, and there isn’t necessarily a maximum interval established as there is for Protection System components. Also, if an entity’s alarm producing device maintenance is performed in sections and triggered by segment or component maintenance, there would essentially be multiple maximum intervals for the alarm producing device of that entity. On that basis, we suggest the interval verbiage be revised to “When alarm producing device or system is verified, or by sections as per the monitored component/protection system specified maximum interval as applicable”. Alternately, if the intention is to establish maximum intervals as simply being no longer than the individual component maintenance intervals as we suggest for inclusion above, then the verbiage should be revised to “When alarm producing component/protection system segment is verified”. In either case are we to interpret monitored components with attributes which allow for no periodic maintenance specified as not requiring periodic alarm verification?
No

R1.5 calls for “identification of calibration tolerances or equivalent parameters…” whereas the associated VSL references “failure to establish calibration criteria….” and is listed as high. If R1.5 is to be included in this standard, then we suggest the severity level of a failure to simply “identify” or document such calibration tolerances would be analogous to the severity level(s) of a “failure to specify one (or Cthe severity level should be consistent with the other elements of R1. Both cases appear to be more of a documentation issue as opposed to a failure to implement. Shouldn’t a failure to implement any necessary calibration tolerance be accounted for in R4?
Yes
R1.5 calls for “identification of calibration tolerances or equivalent parameters for each Protection System Component Type….”. We believe the Supplementary Reference document should provide additional information and examples of calibration tolerances or equivalent parameters which would be expected for the various component types. Especially for any “equivalent” parameters which would be required for compliance for a component type besides protective relays.
Yes
Section II.2.B references R4.3 which has been revised to R4.2.
Yes
Adding Requirement 1.5 is a significant revision and raises questions as to how broadly an accuracy or equivalent parameter requirement and associated documentation would need to be addressed by entities and/or will be measured for compliance. Discussion on this new requirement does not seem to be addressed anywhere in the FAQ or Supplementary Reference documents. Additionally, to the best of our knowledge, the need for such a requirement was not brought up as a concern or comment on the prior draft version of this standard, and in the context of a requirement need, we don’t believe it has been attributed to or actually poses any significant reliability risk. We do not believe this requirement is justified.
Individual
Greg Rowland
Duke Energy
Yes
No
• R1.3 appears to be missing from the VSL for R1. • Also, it’s unclear to us what the expectation is for compliance documentation for “monitoring attributes and related maintenance activities” in R1.4 and “calibration tolerances or other equivalent parameters” in R1.5. This is fairly straightforward for relays, but not for other component types. • R4 – More clarity must be provided on the expectation for compliance documentation. This is a High VRF requirement, and there may only be a small number of maintenance-correctable items, hence a significant exposure to an extreme penalty.
No
Yes
There are typographical errors on the FAQ Requirements Flowchart (should be R4.1.1 and R4.1.2 instead of R4.4.1 and R4.4.2).
Yes
• We have previously commented that the FAQ and Supplementary Reference documents should be made part of this standard. If that cannot be done, then more of the information in those documents needs to be included in the requirements in the standard to provide clarity. Compliance will only be measured against what is in the standard, and we need more clarity. • R1.4 and R1.5 need more information to provide clarity for compliance. It’s unclear to us what the expectation is for compliance documentation for “monitoring attributes and related maintenance activities” in R1.4 and “calibration tolerances or other equivalent parameters” in R1.5. This is fairly straightforward for relays, but not for other component types. Either provide clarity or delete these requirements. • R4.2 – it is critical that more clarity be provided for R1.5 so that we can also understand what the compliance expectation is for R4.2 • M4 – Need to clarify that these pieces of evidence are all “or”, not “and” (i.e. any of the listed examples are sufficient for compliance). We reiterate the need for additional clarity on R1.5 and R4.2 such that compliance can be demonstrated for all component types. • Table 2 – We are fairly

clear on the expectation for relays, but need more clarity on the expectation for other component types. Also, need to change the phrase “corrective action can be taken” to “corrective action can be initiated”, consistent with the Supplementary Reference document.
Group
Electric Market Policy
Mike Garton
Yes
Dominion does not feel that clarity has been added to the tables. A numbering structure should be added to the table for referencing each task prescribed. The tables should more clearly designate and separate time based versus performance based tasks. Additionally, Table 1-4 contains, in several places, an activity to “Verify that the station battery can perform as designed by evaluating the measured cell/unit internal ohmic values to station battery baseline.” This seems to suggest that each time the batteries are checked, the measured cell/unit internal ohmic value should agree with some baseline value. This appears to be overly prescriptive as the values reading-to-reading should fall within the tolerances established per Requirement R1.5, not equal a baseline. The activities for other component types are not this prescriptive.
No
VSL R3. How do you measure a percentage of countable events over a period of time? How are you to determine what the total population to be considered? An entity should not be penalized if they are following their program, correcting issues, and documenting all actions, even if there is a high failure rate in an instance.
Yes
The document on page 3 states that data available from EPRI (et.al) was utilized by the Standard Drafting Team; however, there are no references to EPRI documents in Section 16. Suggest including EPRI references for completeness.
Yes
The FAQ’s do not appear to have kept up with the current draft Standard. For example, Question B under Section 2 for Protective Relays, refers to the use of the word “Restoration” in the definition of a Protection System Maintenance Program. The current definition uses the word “Restore.” Additionally, Answers B, I, and J under Section 2 for Protective Relays each refer to Requirement R4.3, which in not in the current Standard. Suggest a final edit of the FAQ’s to clean-up these type of issues.
Yes
1. The draft to PRC-005-2 contains defined terms that upon approval will remain with the standard rather than being moved to the Glossary of Terms. These terms when used in the Requirements are not designated in any way (e.g., capitalization, bold, etc.) to point the reader back to the in-standard definition. Need to explicitly state the intent of the SDT to either (1) use the newly defined term “Protection System (modification)” only in this standard (PRC-005-2) or (2) replace the existing definition of the existing term in the “Glossary of Terms Used in NERC Reliability Standards” with the proposed definition for the existing term. 2. The language used in Footnote 1 on Attachment A does not agree with the definition of Countable events provided elsewhere in the draft standard. Suggest footnote be removed. 3. Requirement R1.5 uses the phrase “or other equivalent parameters” which is confusing. Suggest replacing with “or acceptance criteria.” 4. Requirement R1.5 should read as follows: “Identify calibration program.” The currently proposed language focuses on specific calibration tolerances and acceptance parameters. These tolerances are developed on a per device, per location basis and would be captured at a procedural level, not a program level. To add this at a program level would only complicate the program and would not lend any improvement to the reliability of the bulk electric system. We recommend maintaining a general calibration requirement, similar to what is stated above, for an entity to develop their calibration program. 5. Requirement 2 Component should be replaced with Component Type. Creating a program to monitor the equipment at this level of equipment would not add any value to the bulk electric system as all components should already be included in component type maintenance tasks. Recommend removing the definition of Component. 6. The requirement to address “monitoring attributes” in Requirement 2 for time based maintenance program is unclear, onerous and unnecessary for a reliable protection system program. 7. Requirement (R4) should identify correctible maintenance issues not the resolution of these issues. The language in R4.2 should strike correcting maintenance issues related

to R1.5 and instead state: Any maintenance correctible issues found during the maintenance activity should be identified" 8. Table 1.2 change time frame from 3 months to 3 years.
Individual
Dale Fredrickson
Wisconsin Electric Power Company
Yes
No
Yes
Table 1-4 requires an activity to verify the state of charge of battery cells. There are no possible options for meeting this requirement listed in the FAQ document. Unlike other terms used in the standard, this term is not mentioned or defined in the FAQ. To comply with this standard, the SDT needs to provide more guidance. For example, for VLA batteries the measured specific gravity could indicate state of charge. For VRLA batteries, it is not as clear how to determine state of charge, but possibly this can be determined by monitoring the float current.
Individual
Dan Rochester
Independent Electricity System Operator
No
R1 Lower - We suggest including a second part as follows: "Failed to identify calibration tolerances or other equivalent parameters for one Protection System component type that establish acceptable parameters for the conclusion of maintenance activities. " R1 Moderate – We suggest similar to the Lower VSL but catering for two Protection System component types. R1 High - We suggest changing the wording of the 3rd part to match the requirement and to cater for more than two Protection System component types. Editorial Comment to Severe VSL for R3: In part 3, replace "less" with "fewer".
No
No
Yes
Requirement R1, Part 1.5 is vague and needs clarification. It is not clear what "Identify calibration tolerances or other equivalent parameters" means and this may be subject to different interpretations by entities and compliance enforcement personnel. Additionally, in the Implementation plan for Requirement R1, we recommend changing "six" to "fifteen" to restore the 3-month time difference between the durations of the implementation periods for jurisdictions that do and don't require regulatory approval, which existed in the previous draft. This change will ensure equity for those entities located in jurisdictions that do not require regulatory approval as is the case here in Ontario. More importantly it supports the IESO's strong belief in the principle that reliability standards should be implemented in an orderly and coordinated fashion across regions to ensure system reliability is not compromised.
Individual
Thad Ness
American Electric Power
No
Table 1.5 (Control Circuitry), row 4, indicates a maximum interval of 12 years for unmonitored control circuitry, yet other portions of control circuitry have a maximum interval of 6 years. AEP does not understand the rationale for the difference in intervals, when in most cases, one verifies the other.

Also, unmonitored control circuitry is capitalized in row 4 such that it infers a defined term. In the first row of table 1-4 on page 16, it is difficult to determine if it is a cell that wraps from the previous page or is a unique row. This is important because the Maximum Maintenance Intervals are different (i.e. 18 months vs 6 years). It is difficult to determine to which elements the 6 year Maximum Maintenance Interval applies. AEP suggests repeating the heading "Monitored Station dc supply (excluding UFLS and UVLS) with: Monitor and alarm for variations from defined levels (See Table 2):" for the bullet points on this page.
No
The VSL table should be revised to remove the reference to the Standard Requirement 1.5 in the R1 "High" VSL. All four levels of the VSL for R2 make reference to a "condition-based PSMP." However, no where in the standard is the term "condition-based" used in reference to defining ones PSMP. The VSL for R2 should be revised to remove reference to a condition-based PSMP; alternatively the Standard could be revised to include the term "condition-based" within the Standard Requirements and Table 1. In multiple instances, Table 1 uses the phrase "No periodic maintenance specified" for the Maximum Maintenance Interval. Is this intended to imply that a component with the designated attributes is not required to have any periodic maintenance? If so, the wording should more clearly state "No periodic maintenance required" or perhaps "Maintain per manufacturers recommendations." Failure to clearly state the maintenance requirement for these components leaves room for interpretation on whether a Registered Entity has a maintenance and testing program for devices where the Standard has not specified a periodic maintenance interval and the manufacturer states that no maintenance is required.
Yes
With such a complex standard as this, the FAQ and Supplementary Reference documents do aid the Protection System owner in demystifying the requirements. But AEP holds strong doubt on how much weight the documents carry during audits. It would be better to include them as an appendix in the actual standard, but in a more compact version with the following modifications: Section 5 of the Supplementary Reference, refers to "condition-based" maintenance programs. However, no where in the standard is the term "condition-based" used in reference to defining ones PSMP. The Supplementary Reference should be revised to remove reference to a condition-based PSMP; alternatively the Standard could be revised to include the term "condition-based" within the Standard Requirements and Table 1. Section 15.7, page 26, appears to have a typographical error "...can all be used as the primary action is the maintenance activity..." Figure 2 is difficult to read. The figure is grainy and the colors representing the groups are similar enough that it is hard to distinguish between groups.
Yes
With such a complex standard as this, the FAQ and Supplementary Reference documents do aid the Protection System owner in demystifying the requirements. But AEP holds strong doubt on how much weight the documents carry during audits. It would be better to include them as an appendix in the actual standard, but in a more compact version with the following modifications: The section "Terms Used in PRC-005-2" is blank and should be removed as it adds no value. Section I.1 and Section IV.3.G reference "condition-based" maintenance programs. However, no where in the standard is the term "condition-based" used in reference to defining ones PSMP. The FAQ should be revised to remove reference to a condition-based PSMP; alternatively the Standard could be revised to include the term "condition-based" within the Standard Requirements and Table 1. The second sentence to the response in Section I.1 appears to have a typographical error "... an entity needs to and perform ONLY time-based...".
Standards Requirement 1.5 and the reference to R1.5 in Requirement 4.2 should be removed. Specifying calibration tolerances for every protection system component type, while a seemingly good idea, represents a substantial change in the direction of the standard. It would be very onerous for companies to maintain a list of calibration tolerances for every protection system component type and show evidence of such at an audit. AEP believes entities need the flexibility to determine what acceptance criteria is warranted and need discretion to apply real-time engineering/technician judgment where appropriate. Three different types of maintenance programs (time-based, performance-based and condition-based) are referenced in the standard or VSLs, yet the time-based and condition-based programs are neither defined nor described. Certain terms defined within the definition section (such as Countable Event or Segment) only make sense knowing what those three programs entail. These programs should be described within the standard itself and not assume a

knowledge of material in the Supplementary Reference or FAQ. “Protective relay” should be a defined term that lists relay function for applicability. There are numerous ‘relays’ used in protection and control schemes that could be lumped in and be erroneously included as part of a Protection System. For example, reclosing or synchronizing relays respond to voltage and hence could be viewed by an auditor as protective relays, but they in fact perform traditional control functions versus traditional protective functions. The Data Retention requirement of keeping maintenance records for the two most recent maintenance performances is a significant hurdle for any owners to abide by during the initial implementation period. The implementation plan needs to account for this such that Registered Entities do not have to provide retroactive testing information that was not explicitly required in the past.
Group
Western Area Power Administration
Brandy A. Dunn
Yes
Yes
No
No
No
Individual
Michael Moltane
ITC
Yes
The following question concerns Table 1-3. Our testing program includes “impedance testing” of the current transformers (CTs) along with insulation testing of the wiring and CT secondary. Impedance testing involves impressing an increasing voltage on the secondary of the CT (with primary open circuited) until 1 (one) ampere flows. This method determines the “knee” of the saturation curve that is used as a benchmark for comparison to previous testing and other CTs. This procedure has successfully identified CT problems over the past several decades. We believe this procedure to be adequate. Does the SDT agree that this method is sufficient to meet the testing requirements of Table 1-3 and that a current comparison is not needed in addition to this testing? Another variation of this is for voltage device compliance. Table 1-3 indicates that we should verify the correct voltages are received by the relay. This means that the VT would need to be energized and we would measure the secondary voltages to compare with others. Power plant relay testing is normally performed during plant outages when this measurement cannot be done. Some plants do not allow any testing while the unit is on line. It would seem that the standard would be written to allow some other type of testing to be performed other than the measurement test. For Table 1-1 Row 1, we believe the intent is to verify that settings are as specified for non-microprocessor relays and microprocessor relays alike. If this is the case, consider adding “Verify that settings are as specified” as a bullet under the headings for non-microprocessor relays and microprocessor relays. Splitting the tables into separate sections for Protective Relays, Communication Systems, VT and CTs, and Station D.C. Supply helped the clarity.
Yes
Yes
Auxiliary Relay Testing: We repeat our objection to the 6 year requirement for testing of auxiliary relays. The STD response to our previous objection was: Please see new Table 1-5. The SDT believes that mechanical solenoid-operated devices share performance attributes (and failure modes) with electromechanical relays and need to be tested at similar intervals. Performance-based maintenance is an option to increase the intervals if the performance of these devices supports those intervals.

Auxiliary relays are, of course, electromechanical relays, but much less complicated than impedance, differential or even time-overcurrent electromechanical relays. It has been our experience that trip failures are rare and that our present 10 year control, trip tests, and other related testing are sufficient in verifying the integrity of the scheme. Section 8.3 of the Supplemental Reference notes statistical surveys were done to determine the maintenance intervals. Were auxiliary relays included in these surveys in a such a way to verify that they indeed require a 6 year maintenance interval? We recommend they be considered part of the control circuitry, with a 12 year test cycle. High Speed Ground Switch Testing We repeat our recommendation that the standard state that a high speed ground switch is an interrupting device. We also recommend that testing requirements for High-Speed ground switches be clearly stated in the standard. Section 15.3 of the Supplemental Reference contains the following: It is necessary, however, to classify a device that actuates a high-speed auto-closing ground switch as an interrupting device if this ground switch is utilized in a Protection System and forces a ground fault to occur that then results in an expected Protection System operation to clear the forced ground fault. The SDT believes that this is essentially a transferred-tripping device without the use of communications equipment. If this high-speed ground switch is "…applied on, or designed to provide protection for the BES…" then this device needs to be treated as any other Protection System component. The control circuitry would have to be tested within 12 years and any electromechanically operated device will have to be tested every 6 years. If the spring-operated ground switch can be disconnected from the solenoid triggering unit then the solenoid triggering unit can easily be tested without the actual closing of the ground blade. We disagree that a high-speed ground switch can be adequately tested by disconnecting the solenoid triggering unit. The ability of the trip coil to "operate the circuit breaker" must be verified per Table 1-5 Row 1. The ability of the "solenoid triggering unit" to operate the ground switch should be required also. A high-speed ground switch is a unique device. Its maintenance requirements should be specifically included in the standard itself. Based on Draft 3 of the standard, this is a electromechanically operated device and would have to be tested every 6 years. A logical location would be in Table 1-5. Is there test data to support the test method of disconnecting the solenoid triggering unit?

No

Yes

5.1 We would like some further clarification on PRC-005-2 Draft 3, specifically on the statement in Table 1-4 for unmonitored station DC supply with VLA batteries. In the table it is mentioned that we are to perform either a capacity test every six years or verify that the station battery can perform as designed by evaluating the measured cell/unit internal ohmic values to station battery baseline, the latter statement is a little vague and needs further clarification with regards to the expectations from the standard. Please describe an acceptable method of establishing a baseline "measured cell/unit internal ohmic value" We would like to know what exactly is required. We measure the cell internal ohmic value on an annual basis every 12 months, is that enough? What are the comparison parameters with regards to battery baseline? At what percent should we look to replace the cell? 5.2 Is a battery system that only supplies the SCADA RTU considered part of the protective system if alarms for the monitored protective systems utilize that SCADA RTU?

Individual

Kathleen Goodman

ISO New England Inc.

No

The wording "Component Type" is not necessary in each title. Just the equipment category should be listed--what is now shown as "Component Type - Protective Relay", should be Protective Relay. However, Protective Relay is too general a category. Electromechanical relays, solid state relays, and microprocessor based relays should have their own separate tables. So instead of reading Protective Relay in the title, it should read Electromechanical Relays, etc. This will lengthen the standard, but will simplify reading and referring to the tables, and eliminate confusion when looking for information. The "Note" included in the heading is also not necessary. "Attributes" is also not necessary in the column heading, "Component" suffices.

No

Because all the requirements deal with protective system maintenance and testing, violations could directly cause or contribute to bulk electric system instability, etc., the VRFs should all be "High". The

Time Horizons should all be “Operations Planning” because of the immediacy of a failure to meet the requirements. For the R1 Lower VSL, include a second part to read: Failed to identify calibration tolerances or other equivalent parameters for one Protection System component type that establish acceptable parameters for the conclusion of maintenance activities. For the R1 Moderate VSL, suggest similar wording as for the Lower VSL but specifying two Protection System component types. For the R1 High VSL, suggest changing the wording of the 3rd part to be similar to the Lower VSL to match the requirement and to cater for more than two Protection System component types. For the R3 Severe VSL, in part 3, replace “less” with fewer.

No

Yes

See response to Question 5 below.

In general, the standard is overly prescriptive and complex. It should not be necessary for a standard at this level to be as detailed and complex as this standard is. Entities working with manufacturers, and knowledge gained from experience can develop adequate maintenance and testing programs. Why are “Relays that respond to non-electrical inputs or impulses (such as, but not limited to, vibration, pressure, seismic, thermal or gas accumulation)…” not included? The output contacts from these devices are oftentimes connected in tripping or control circuits to isolate problem equipment. Due to the critical nature of the trip coil, it must be maintained more frequently if it is not monitored. Trip coils are also considered in the standard as being part of the control circuitry. Table 1-5 has a row labeled “Unmonitored Control circuitry associated with protective functions”, which would include trip coils, has a “Maximum Maintenance Interval” of “12 Calendar Years”. Any control circuit could fail at any time, but an unmonitored control circuit could fail, and remain undetected for years with the times specified in the Table (it might only be 6 years if I understand that as being the trip test interval specified in the table). Regardless, if a breaker is unable to trip because of control circuit failure, then the system must be operated in real time assuming that that breaker will not trip for a fault or an event, and backup facilities would be called upon to operate. Thus, for a line fault with a “stuck” breaker (a breaker unable to trip), instead of one line tripping, you might have many more lines deloaded or tripped because of a bus having to be cleared because of a breaker failure initiation. The bulk electric system would have to be operated to handle this contingency. In reference to the FAQ document, Section 5 on Station dc Supply, Question K, clarification is needed with respect to dc supplies for communication within the substation. For example, if the communication systems were run off a separate battery in separate area in a substation, would the standard apply to these batteries or not? To define terms only as they are used in PRC-005-2 is inviting confusion. Although they may be unique to PRC-005-2, some or all of them may be used in future standards, some already may be used in existing standards, and may or may not be deliberately defined. Consistency must be maintained, not only for administrative purposes, but for effective technical communications as well. What is the definition of “Maintenance” as used in the table column “Maximum Maintenance Interval”? Maintenance can range from cleaning a relay cover to a full calibration of a relay. A control circuit is not a component, it is made up of components. Sub-requirement 1.5 needs to be clarified. It is not clear what “Identify calibration tolerances or other equivalent parameters…” means, and may be subject to different interpretations by entities and compliance enforcement personnel. In the Implementation plan for Requirement R1, recommend changing “six” to fifteen. This change would restore the 3-month time difference that existed in the previous draft, between the durations of the implementation periods for jurisdictions that do and do not require regulatory approval. It will ensure equity for those entities located in jurisdictions that do not require regulatory approval, as is the case in Ontario. The ‘box’ for “Monitored Station dc supply…” in Table 1-4 is not clear. It seems to continue to the next page to a new box. There are multiple activities without clear delineation.

Group

TransAlta Centralia Generation Partnership

Joanna Luong-Tran

Yes

No

Please provide acronyms list and its explanations in the standard.

No
No
No
Individual
Rick Koch
Nebraska Public Power District
Yes
No
VRF's: The definition of a Medium Risk Requirement included on page 8 of the SAR states: "A requirement that, if violated, could directly affect the electrical state or the capability of the bulk electric system, or the ability to effectively monitor and control the bulk electric system." The PSMP does not "directly" affect the electrical state or the capability of the bulk electric system. A failure of a Protection System component is required to "directly" affect the BES. Therefore, the PSMP has only an "indirect" affect on the electrical state or the capability of the BES. Requirements R1 through R3 and their subparts are administrative in nature in that they are comprised entirely of documentation. Therefore, I recommend changing the Violation Risk Factor of Requirements R1, R2, and R3 to Lower to be consistent with the Violation Risk Factors defined in the SAR. VSL's: R2: Tables 1-1 through 1-5 refers to time-based maintenance programs. I recommend changing "condition-based" to "time-based" in all four severity levels. SAR Attachment B - Reliability Standard Review Guidelines states that violation severity levels should be based on the following equivalent scores: Lower: More than 95% but less than 100% compliant Moderate: More than 85% but less than or equal to 95% compliant High: More than 70% but less than equal to 85% compliant Severe: 70% or less compliant I recommend revising the percentages of the violation severity levels to be consistent with the SAR. R3: The performance-based maintenance program identified in PRC-005 Attachment A provides the requirements to establish the technical justification for the initial use of a performance-based PSMP and the requirements to maintain the technical justification for the ongoing use of a performance-based PSMP. However, it appears the VSLs for Requirement R3 only addresses the ongoing use of the technical justification. I recommend revising the VSLs for R3 to include the initial use of the technical justification. Item 2) of R3 Severe VSL is a duplicate of Item 2) of R3 Lower VSL. This item is administrative in nature therefore I recommend deleting Item 2) from R3 Severe VSL. The first and third bullets of item 4) of R3 Severe VSL are administrative in nature and should be moved to the Lower VSL R4: SAR Attachment B - Reliability Standard Review Guidelines states that violation severity levels should be based on the following equivalent scores: Lower: More than 95% but less than 100% compliant Moderate: More than 85% but less than or equal to 95% compliant High: More than 70% but less than equal to 85% compliant Severe: 70% or less compliant I recommend revising the percentages of the violation severity levels to be consistent with the SAR.
Yes
The Supplemental Reference Documents identified are unapproved and in draft form. I believe that only approved documents should be referenced in the Standard. Therefore, I recommend updating the Supplemental Reference Documents section with approved versions of the documents.
No
Yes
Definitions: The PSMP definition inappropriately extends the maintenance program to include corrective maintenance. The first bullet of the Detailed Description section of the SAR specifically states: "Analysis of correct operations or misoperations may be an integral part of condition-based maintenance processes, but need not be mandated in a maintenance standard." The comment in the SAR was directed toward the Purpose of PRC-017 since it is the only one of the applicable PRC standards that included corrective measures in its Purpose. However, the concept of not including corrective maintenance in a maintenance standard should apply to all of the applicable PRC

standards. The same statement from the SAR identified above was also included in the NERC SPCTF Assessment of Standards referenced in the SAR. Neither the SAR nor the NERC SPCTF Assessment of the Standards identified the need to expand the maintenance and testing program to include corrective maintenance. I recommend deleting the words "and proper operation of malfunctioning components is restored." from the first sentence of the PSMP definition. I believe that failure to do so exceeds the scope of the SAR. The definition of a Countable Event should clearly state whether or not multiple conditions on a single component will count as a single Countable Event or as multiple Countable Events. For example, a single relay fails its undervoltage setting and its under frequency setting. Is this one Countable Event or two Countable Events? Applicability Part 4.2.2: The ERO does not establish underfrequency load-shedding requirements. Those requirements will be established by Reliability Standard PRC-006-1 when it is approved by FERC. I recommend changing Accountability Part 4.2.2. to "...installed to provide last resort system preservation measures." (Note this wording is consistent with the Purpose of PRC-006-0.) Applicability Part 4.2.5.4 and 4.2.5.5: Station Service transformers provide energy to plant loads and not the BES. If these plant transformers are included, why not include the rest of the plant systems? I recommend deleting Applicability Part 4.2.5.4 and 4.2.5.5. Requirement R1 Part 1.2: The wording of the first sentence is unclear about what information is required. For example, I could state in my PSMP that: "All Protection System component types are addressed through time-based, performance-based, or a combination of these maintenance methods" and be compliant with the Requirement. I recommend re-wording the first sentence to state: "Identify which maintenance method is used to address each Protection System component type. Options include time-based, performance-based (per PRC-005 Attachment A), or a combination of time-based and performance-based (per PRC-005 Attachment A)." Note that PRC-005 Attachment A does not address a combination of maintenance methods and therefore the second reference in the first sentence should be removed if the original wording is retained. Requirement R1 Part 1.4: The column titles in Tables 1-1 through 1-5 have been revised to “Component Attributes” and “Activities”. I recommend changing "monitoring attributes" to "component attributes" and "maintenance activities" to "activities" to be consistent with the Tables. Requirement R1 Part 1.5: Maintenance acceptance criteria for a given Protection System component type may very depending on the manufacturer, model, etc.. Including all acceptance criteria in the PSMP document will over-complicate the program document. I recommend clarifying Part 1.5 to allow the incorporation of device-specific acceptance criteria in the applicable evidentiary documentation. One possible option is to add a second sentence as follows: "The calibration tolerances or other equivalent parameters may be included with the maintenance records." Note that a personal preference would be to use the phrase “acceptance criteria” instead of “calibration tolerances or other equivalent parameters”. Requirement R4: The PSMP definition inappropriately extends the maintenance program to include corrective maintenance. The first bullet of the Detailed Description section of the SAR specifically states: "Analysis of correct operations or misoperations may be an integral part of condition-based maintenance processes, but need not be mandated in a maintenance standard." The comment in the SAR was directed toward the Purpose of PRC-017 since it is the only one of the applicable PRC standards that included corrective measures in its Purpose. However, the concept of not including corrective maintenance in a maintenance standard should apply to all of the applicable PRC standards. The same statement from the SAR identified above was also included in the NERC SPCTF Assessment of Standards referenced in the SAR. Neither the SAR nor the NERC SPCTF Assessment of the Standards identified the need to expand the maintenance and testing program to include corrective maintenance. I recommend deleting the words "including identification of the resolution of all maintenance correctable issues" from the first sentence of the Requirement. I believe that failure to do so exceeds the scope of the SAR. Requirement R4 Part 4.2: What is considered sufficient verification of parameters? Does this require an engineer or technician signature or simply an indication of pass/fail? The PSMP definition inappropriately extends the maintenance program to include corrective maintenance. The first bullet of the Detailed Description section of the SAR specifically states: "Analysis of correct operations or misoperations may be an integral part of condition-based maintenance processes, but need not be mandated in a maintenance standard." The comment in the SAR was directed toward the Purpose of PRC-017 since it is the only one of the applicable PRC standards that included corrective measures in its Purpose. However, the concept of not including corrective maintenance in a maintenance standard should apply to all of the applicable PRC standards. The same statement from the SAR identified above was also included in the NERC SPCTF Assessment of Standards referenced in the SAR. Neither the SAR nor the NERC SPCTF Assessment of the Standards identified the need to expand the maintenance and testing program to include corrective maintenance. I recommend re-wording

Requirement 4, Part 4.2 to state: "Verify that the components are within the acceptable parameters established in accordance with Requirement R1, Part 1.5 at the conclusion of the maintenance activities." I believe that failure to do so exceeds the scope of the SAR. Measurement M2: Can a single specification document suffice for similar relay types such as one document for SEL relays? For trip circuit monitoring can a standard document be used for a group of similar schemes ? Measurement M4: I assume this is not an all inclusive list of potential forms of evidence. Please clarify what is meant by "such as". Does this mean that: 1) Any one item is sufficient?; 2) Certain combinations of evidence are necessary? If so, what combinations?; 3) Are other items that are not identified here acceptable? Measurement M4 repeatedly refers to "dated" evidence. However, current audit expectations include either performer signatures or initials on the evidence in addition to the dates. Please revise Measurement M4 to clearly state the expectations regarding performer signatures or initials on the evidence documents. The PSMP definition inappropriately extends the maintenance program to include corrective maintenance. The first bullet of the Detailed Description section of the SAR specifically states: "Analysis of correct operations or misoperations may be an integral part of condition-based maintenance processes, but need not be mandated in a maintenance standard." The comment in the SAR was directed toward the Purpose of PRC-017 since it is the only one of the applicable PRC standards that included corrective measures in its Purpose. However, the concept of not including corrective maintenance in a maintenance standard should apply to all of the applicable PRC standards. The same statement from the SAR identified above was also included in the NERC SPCTF Assessment of Standards referenced in the SAR. Neither the SAR nor the NERC SPCTF Assessment of the Standards identified the need to expand the maintenance and testing program to include corrective maintenance. I recommend deleting the words: "and initiated resolution of identified maintenance correctable issues" from the last sentence of Measurement M4. I believe that failure to do so exceeds the scope of the SAR. Compliance Part 1.3: Tables 1-1 through 1-5 refers to time-based maintenance programs. I recommend changing "performance-based" to "time-based" in the last sentence of the third paragraph. The last paragraph of Part 1.3 of the Compliance Section states: "The Compliance Enforcement Authority shall keep the last periodic audit report and all requested and submitted subsequent compliance records." This appears to be a requirement of the Compliance Enforcement Authority however they are not identified in Section 4 Applicability of the Standard. It is also in conflict with the SAR Attachment B - Reliability Standard Review Guidelines which states on page SAR-10: "Do not write any requirements for the Regional Reliability Organization. Any requirements currently assigned to the RRO should be re-assigned to the applicable functional entity." I recommend deleting the last paragraph of Part 1.3 of the Compliance Section to avoid conflict with the SAR. Table 1-1: The Activity of row 1 states: “Verify operation of the relay inputs and outputs that are essential to …”. Please clarify what is meant by “operation of” the relay inputs and outputs. What is the criteria to determine if something is “essential”? The first line of row 2 has a double colon. Please delete one of them. For the second bullet of row 2 column 1, please clarify what is meant by the last part of this sentence "that are also performing self monitoring and alarming" and how it relates to the voltage and current sampling required. It appears the self monitoring is required in the first bullet. For the first bullet of row 2 column 3, many relay settings may not be essential to the protective function of the relay. I recommend revising the first bullet to: “Settings that are essential to the proper function of the protection system are as specified.” The format of the Activities column for all three rows are different. Please reformat them to be consistent. My preference is the second row. Table 1-2: Row 1 Column 2, verifying the functionality of communications systems on a 3 calendar months basis is excessive and unnecessary. Suggest changing the Maximum Maintenance Interval to either 6 calendar months or semi-annual. Row 2 Column 1, please provide examples of typical communications systems that fit into this category, e.g.,Mirror Bit or Guard systems? The words “such as” are used repeatedly. Please clarify what is meant by "such as". Is this left up to the Utility to define in their PSMP? Table 1-5: The Activity for row 1 requires verification that each trip coil is able to operate the device. If a control circuitry contains multiple trip coils, it is not always possible to determine which trip coil energized to trip the device. I recommend changing "each trip coil" to "at least one trip coil". Please clarify what is meant by an "Electromechanical trip" device in row 3. Row 3 column 3, does this mean verify the trip contact on the device operates properly but not verify the trip circuit wiring from this contact to the trip coil since the trip circuit is tested in the row below? It is difficult to separate the meaning in these two rows. Row 4 column 3 requires verification of all paths of the control and trip circuits. Please clarify if this includes the control circuitry of Protection Systems located at the other end of a line if the device utilizes a remote trip scheme?

Group
Bonneville Power Administration
Denise Koehn
Yes
Yes
Yes
Some of the maintenance tasks need to be defined: - The state of charge of each individual cell may need to be better defined. There are means to verify the state of charge of the entire bank, but not each individual cell. - Battery continuity needs to be defined. - There is no mention to what the limits are for the "other equivalent parameters" when performing maintenance activities, just that they need to be identified. There are a large number of battery models which creates a large contrast of parameters, which cannot be grouped together. It is also difficult to get baseline values for older battery models which could result in moving baselines until they become more accurate as the database is populated. - If corrective actions are required, is there a maximum allowable duration for when they need to be resolved? The maximum allowable maintenance for station batteries (impedance testing and performance/service testing) is too frequent and suggest an extension or alternative testing methods to stay in compliance. The frequency with which BPA performs the 18 month maintenance tasks as prescribed in the standard are on a 24 month interval along with visual inspections and voltage measurements monthly. BPA has seen success with this maintenance program with the ability to identify suspect cells or entire banks with adequate time to perform corrective actions such as repairs or replacements. BPA also does not perform routine capacity testing, this is an as required maintenance task to confirm/validate our other test results if needed. BPA would like to see clarification for these issues before we can fully support this standard.
Individual
Armin Klusman
CenterPoint Energy
Yes
Yes
The need for an FAQ document, in addition to an extensive Supplementary Reference document, illustrates the complexity and impracticality of the proposed Standard. CenterPoint Energy does not support the development of an additional type of document, that is, the FAQ document. CenterPoint Energy recommends eliminating the FAQ document and using only a Supplementary Reference" document. This would also provide the benefit of not having contradictory information in the two documents.
Yes
(a) CenterPoint Energy cannot support this proposed Standard. Any standard that requires a 35 page Supplementary Reference document and a 37 page FAQ – Practical Compliance and Implementation document, in addition to extensive tables in the Standard, is much too prescriptive and complex to be practically implemented. (b) CenterPoint Energy is opposed to approving a standard that imposes unnecessary burden and reliability risk by imposing an overly prescriptive approach that in many cases would "fix" non-existent problems. To clarify this last point, CenterPoint Energy is not asserting that maintenance problems do not exist. However, requiring all entities to modify their practices to conform to the inflexible approach embodied in this proposal, regardless of how existing practices are working, is not an appropriate solution. Among other things, requiring entities to modify practices that are working well to conform to the rigid requirements proposed herein carries the downside risk that the revised practices, made solely to comply with the rigid requirements, degrade reliability performance. (c) CenterPoint Energy is very concerned that a large increase in the amount of

documentation will be required in order to demonstrate compliance - with no resulting reliability benefit. CenterPoint Energy believes this Standard could actually result in decreasing system reliability, as the Standard proposes excessive maintenance requirements. The following is included in the Supplementary Reference document (page 8): “Excessive maintenance can actually decrease the reliability of the component or system. It is not unusual to cause failure of a component by removing it from service and restoring it.” System reliability can be even further reduced by the number of transmission line and autotransformer outages required to perform maintenance. (d) The following is included in the FAQ – Practical Compliance and Implementation document: “PRC-005-2 assumes that thorough commission testing was performed prior to a protection system being placed in service. PRC-005-2 requires performance of maintenance activities that are deemed necessary to detect and correct plausible age and service related degradation of components such that a properly built and commission tested Protection System will continue to function as designed over its service life.” CenterPoint Energy believes some proposed requirements, such as wire checking a relay panel, do not conform to this statement. CenterPoint Energy’s experience has been that panel wiring does not degrade with age and service and that problems with panel wiring, after thorough commissioning, is not a systemic issue.
Individual
Andrew Pusztai
American Transmission Company
Yes
Yes
No
Yes
FAQ Protective Relays 2.D: The last sentence is not consistent with the discussions at the “March 2010, Standard Drafting Team Meeting, Project 2007-17”. The understanding from that meeting was that the relay settings would be verified that the “as left” settings were the same as the “as found” settings and that the intent was not to verify the settings against a Master Record. Therefore the intent is that the tester will verify that no setting changes were made as part of the testing process. Please include this clarification with the language in the standard. FAQ Group by Type of Maintenance Program 2.B: We agree with the use of either the in-service date or the commissioning date to start the initial due date calculation for maintenance. Please include this clarification with the language in the standard.
Yes
ATC recognizes the substantial efforts that the SDT has made on PRC-005 and appreciate the SDT’s modifications to this Standard based on previous comments made. ATC looks forward to continuing to have a positive influence on this process via the comment process, ballots and interaction with the SDT. ATC was very close to an affirmative vote on this Standard prior to the unanticipated changes that appeared in this most recent posting. These changes introduce a significant negative impact from ATC’s perspective. Therefore, ATC is recommending a negative ballot in the hope that our concerns regarding R 1.5 and R 4.2 and other clarifications will be included with the standard The two items within the proposed Standard that we take exception to are not directly related to implementing FERC Order 693. Rather, it is the overly prescriptive nature with respect to the “how” as outlined in the proposed Standard that ATC takes exception... To improve and find the proposed Standard acceptable, ATC would like to see the following modifications: 1. Change the text to require the actuation of a single trip coil (row 1 of table 1.5). This would satisfy the intent to exercise the mechanism on a regular schedule, given that the mechanism binding is a much more likely source of a coil failure. The balance of trip coils could then be tested as part of routine breaker maintenance. 2. Eliminate the additional requirements introduced by the addition of R1.5 and the associated modifications to R4.2. The additional documentation required for the range of each element is typically incorporated into the pass/fail mechanism of the existing test equipment (which is reflective of the manufacturer recommendations) used to conduct these tests. Therefore, requiring the assembly of this additional documentation from each entity would: a. Be duplicative and voluminous

as it would require us to track thousands of additional data points due to the variability in element ranges by relay manufacturer, model number and vintage. b. Not add to the reliability of the system as this function is already being performed on a collective basis.
Group
Santee Cooper
Terry L. Blackwell
Yes
No
No
No
We do not agree with the addition of Requirements 1.5 and 4.2 without work on or review by the Power System Maintenance and Testing Drafting Team. While some maintenance activities on some component types (such as calibration testing of electromechanical relays) translate inherently well into these requirements,the requirements of tolerances and documentation do not fit as well to all maintenance activities on other types of equipment considered part of the protective system. These requirements need to be worked on through the drafting team to make them viable and effective for all protective system component types.
Individual
Eric Salsbury
Consumers Energy
Yes
Yes
No
No
Yes
1. Table 1-3 states, “are received by the protective relays”. Does this require that the inputs to each individual relay must be checked, or is it sufficient to verify that acceptable signals are received at the relay panel, etc? 2. Relative to Table 1-5, the activities will likely require that system components be removed from service to complete those activities. If the changes to the BES definition (per the FERC Order) causes system elements such as 138 kV connected distribution transformers to be considered as BES, these components can not be removed from service for maintenance without outaging customers. The standard must exempt these components from the activities of Table 1-5 if the activity would result in deenergizing customers. 3. For the component types addressed in Tables 1-3 and 1-5, the requirements may cause entities to identify components very differently than they are currently doing, and doing so may take several years to complete. The Implementation Plan for R1 and R4 is too aggressive in that it may not permit entities to complete the identification of discrete components and the associated maintenance and implement their program as currently proposed. We propose that the Implementation Plan specifically address the components in Table 1-3 and 1-5 with a minimum of 3 calendar years for R1 and 12 calendar years after that for R4. 4. As for the interval in Table 1-4 regarding the battery terminal connection resistance, we believe that an 18-month interval is excessively frequent for this activity, and suggest that it be moved to the 6-calendar-year interval. 5. In Table 1-4, we currently re-torque all of the battery terminal connections every 4-years, rather than measuring the terminal connection resistance to determine if the connections are sound. Disregarding the interval, would this activity satisfy the “verify the battery terminal connection resistance” activity?

Group
NextEra Energy
Silvia Parada Mitchell
Yes
Yes
No
No
Yes
The draft standard is too perscriptive. Requirement R1, Part 1.5 would be overwhelming if approved. Requirement R1, Part 1.5 should be deleted. Requirement R4, Part 4.2 phrase "established in accordance with Requirement R1, Part 1.5" should be deleted. The standard without these additional requirements would be sufficient to establish that the Protection System is maintained and protects the BES. Table 1-2 Component Type Communications Systems Maximum Maintenance Interval of 3 Calendar Months to verify that the communications system is functional for any unmonitored communications system is unyielding. Most communication failures are caused by power supply failures which Next Era does monitor. Based on experience and monitoring of communication power supplies, 12 calendar months would be adequate. The maximum maintenance interval should be changed from 3 calendar months to 12 calendar months. Table 1-4, Component Type Station dc Supply Maximum Maintenance Interval of 3 Calendar Months to inspect electrolyte levels on “Any unmonitored station dc supply not having the monitoring attributes of a category below. (excluding UFLS and UVLS)” is too stringent. Verifying battery charger float voltage every 18 calendar months is sufficient to prevent excessive gassing and water loss of battery cells. The maximum maintenance interval should be changed from 3 calendar months to 6 calendar months. Table 1-4, Component Type Station dc Supply Maximum Maintenance Interval of 3 Calendar Months to measure the internal ohmic values on “Unmonitored Station dc supply with Valve Regulated Lead-Acid (VRLA) batteries that does not have the monitoring attributes of a category below. (excluding UFLS and UVLS)” is too stringent. With the standard’s requirement to verify the float voltage every 18 calendar months, measuring the internal ohmic values every 6 calendar months would be adequate. The maximum maintenance interval should be changed from 3 calendar months to 6 calendar months.
Individual
Bill Shultz
Southern Company Generation
Yes
Yes
Yes
--- On Page 4, Paragraph 2.2 is no longer proposed – the paragraphs just before 2.2 need to be revised. --- On Page 12, item 7, the phrase “operational trip test” is not used in the standard. Please consider using this phrase in the standard. --- On Pages 14-15, several paragraphs describing the contents of Sections 9, 10, 11, & 13 are given – these appear to be out of place and don’t seem to belong here (just before “9. Performance-Based Maintenance Process). --- On Page 24, correct the bulleted Protection System Definition to match the most recent definition. --- On Page 29, please improve the clarity of Figure 2. --- On Page 31, please revise the flowchart references to R4.4.1 and R4.4.2. --- Please correct the following formatting: Page 2, Table of Contents; Page 18, the bulleted item list; Page 23, add a space before the last paragraph.
Yes
--- On Page 3, please revise the flow chart references to R4.4.1 and R4.4.2. Also, add (Attachment A) to the “Performance Based” label. --- On Page 7, Section I, correct the reference of R4.3 to R4.2.

Also, revise the last paragraph in Section I to the following: The entity should assure that the component performance is acceptable at the conclusion of the maintenance activities or initiate resolution of any indentified maintenance correctable issues. --- On Page 7, Section J, correct the reference of R4.3 to R4.2. --- On Page 10, Section D, a reference is made to “trip test” Table 1. Should this be Table 1-5? The exact phrase “trip test” is not used in the standard. Should it be? --- On Page 10, Section e, the phrase “functional (or operational) trip test” is not used in the standard – should it be? --- On Page 11, Section 5A, correct the reference of Table 1 to Table 1-4 in the Station Battery and Emerging Technologies paragraph. --- On Page 12, Section B, correct the reference of Table 1 to Table 1-4. (2X) --- On Page 13, Section F, correct the reference of Table 1 to Table 1-4. (1X) --- On Page 14, Section G, correct the reference of Table 1 to Table 1-4. (3X) --- On Page 14, Section G, change the text “The first maintenance activity” to The capacity testing activity”. --- On Page 14, Section G, change the text “The second maintenance activity”, to The internal ohmic measurement activity”. --- On Page 14, Section H, correct the reference of Table 1 to Table 1-4. (1X) --- On Page 17, Section C, correct the reference of Table 1 to Table 1-5. (1X) --- Please address what is meant by “Battery terminal connection resistance” on Page 14, Table 1-4 of the standard.
Yes
• Please consider retaining the definitions stated to be moved to the NERC Glossary – they would be valuable to entities in the standard. • On Page 5, Section 1.2, please consider changing “or a combination of these maintenance methods (per PRC-005-Attachment A).” to “or a combination of these two maintenance methods.” • On Page 5, Section 1.5: recommend deleting this section - the subjectivity of what is an acceptable value for component testing makes this requirement un-valuable. • On Page 5, Section 4.2, it is recommended that the requirement be the following: Either verify that the component performance is acceptable at the conclusion of the maintenance activities or initiate resolution of any identified maintenance correctable issue. • On Page 5, Measure M1, replace 1.5 with 1.4 (after eliminating Requirement 1.5) • On Page 6, Section 1.3, replace the existing Data Retention text with the following: The TO, GO, and DP shall each retain documentation for the longer of the these time periods: 1) the two most recent performances of each distinct maintenance activity for the Protection System component, or (2) all performances of each distinct maintenance activity for the Protection System component since the previous scheduled audit date. The Compliance Enforcement Authority shall keep the last periodic audit report and all requested and submitted subsequent compliance records. • On Page 10, Section F, please correct the revision information for the documents listed. • On Pages 14 & 15, Table 1-4, move the bottom row to the next page so that it is easier to see that the maintenance activities are an “either/or” option. • On Page 17, Table 1-5, it seems that the 12 calendar year interval activities would automatically be included in the 6 calendar year activity for verifying the electrical operation of electromechanical trip and auxiliary devices. Is the 12 year requirement superfluous? • On Page 19, Attachment A, it is recommended to delete the footnote #1 since the definition is given already on Page 2.
Group
NERC Staff
Mallory Huggins
Yes
Yes
In section 2.3, NERC staff recommends noting that the present NERC Glossary definition of Bulk Electric System will be revised in response to FERC Order No. 743. In Section 2.4, NERC staff recommends changing the phrase “relays that use measurements of voltage, current, frequency and/or phase angle” with “protective relays that respond to electrical quantities” for consistency with recent changes to the proposed definition of Protection System.
Yes
At a minimum, the response to Question II.1.A should be revised to reflect the present revision of Requirement R1. In the current proposed response to the FAQ, the answer refers to text that was deleted from Requirement R1 in the current posting of the standard; i.e., this standard covers protective relays “that use measurements of voltage, current and/or phase angle to determine anomalies and to trip a portion of the BES.” The removal of this text from Requirement R1 makes it less clear whether the standard applies to reclosing functions and protective functions used to

supervise automatic or manual closing of a circuit breaker to ensure the voltage magnitude and phase angle difference are within specified tolerances. The drafting team also should consider whether additional specificity is required to ensure applicability is clearly defined within the standard. In the response to Question II.2.H, NERC staff notes that the word “than” should be changed to “then” in the phrase “If the component no longer performs Protection System functions than...” In the response to Question II.2.I, NERC staff recommends noting that “When a failure occurs in a protection system, power system security may be compromised, and notification of the failure must be conducted in accordance with relevant NERC standard(s).” The recommended text is included in the Supplementary Reference Document and inclusion in the FAQ response provides consistency and highlights obligations in other standards necessary for BES reliability. In the response to Question III.1.A, NERC staff recommends noting that the present NERC Glossary definition of Bulk Electric System will be revised in response to FERC Order No. 743. In the response to Question III.3.A, NERC staff recommends a more generic reference to NERC UFLS requirements in place of the reference to PRC-007-0, as PRC-007 will be retired pending FERC approval of PRC-006-1. In the response to Question IV.1.A (third paragraph), NERC staff recommends changing the phrase “that are certainly coming to the industry” to “may be coming to the industry” for consistency with the change to the response to Question V.4.A. Both questions appear to address the same or similar concerns.
Yes
Commissioning (Initial) Testing: During development of PRC-005-2, NERC staff has observed a trend in system disturbances involving Protection System problems that should have been identified and corrected during commissioning (initial) testing. While NERC staff recognizes that the addition of commissioning testing may be unrealistic at this stage in the standard drafting process, we want to emphasize its importance. If the SDT chooses to leave commissioning testing out at this juncture, we plan to pursue other avenues to ensure its eventual inclusion through a separate standards project. NERC staff agrees with the SDT’s opinion that without commissioning testing, a registered entity responsible for compliance with this standard cannot provide proof of its interval testing period as required by the standard. As soon as the entity puts the protective scheme into service, time “0” for interval testing begins. The next testing interval would be some specific number of years in the future from time “0.” An entity’s failure to properly commission new protection system equipment has caused or exacerbated several recent events, greatly impacting BPS reliability. The following are examples of errors that were not detected during commissioning. These undetected errors were observed by NERC staff during event analysis and investigation activities: •Failure to apply correct relay settings. This has occurred repeatedly and has been due to improper procedures, poor document control, misapplication or miscalibration of the relay, or a combination of the above. •Failure to install the proper CT or PT ratio occurred due to poor document control practices and resulted in an undesired protection system response after the equipment was placed in service. •Failure to conduct a functional test of new control circuits to the schematic diagram resulted in an undesired protection system response after equipment was placed in service. •An incorrect CT ratio was not detected during commissioning, and the equipment was subsequently placed in service. Because in-service testing was not performed, the error remained undetected until the relay misoperated during a fault. Many of the above conditions can remain undetected for extended periods, until they are revealed by a relay misoperation during fault or heavy load conditions. The affects resulting from these cases could have been prevented with proper commissioning testing. We believe that by requiring commissioning testing for new protection system equipment, the reliability of BPS would be improved. --- Requirement 2: In Requirement 2, it is unclear what is meant by “shall verify those components possess the monitoring attributes identified in Tables 1-1 through 1-5 in its PSMP” because the use of terms in the Requirement is not consistent with the column headings used in Tables 1-1 through 1-5. It also is not clear that components need not possess all attributes; rather, they must possess all attributes consistent with the Maximum Maintenance Interval specified in an entity’s PSMP. NERC staff recommends revising R2 to provide additional clarity as follows: “Each Transmission Owner, Generator Owner, and Distribution Provider that uses maintenance intervals for monitored Protection Systems described in Tables 1-1 through 1-5, shall verify those components possess the monitoring attributes Component Attributes identified in the first column of Tables 1-1 through 1-5 consistent with the Maximum Maintenance Interval specified in its PSMP.”
Group
FirstEnergy
Sam Ciccone

Yes
While we agree that the clarity of the tables has improved, there are still items that warrant further clarity. In Table 1-1, references to "Verify acceptable measurement of power system input values" is made for microprocessor relays on 6 and 12 calendar year intervals. Wouldn't this also be prudent on non-microprocessor based relays as well on the 6 year interval? Also, in Table 1-3, "Verify that acceptable measurement of the current and voltage signals are received by the protective relays" is shown on a 12 calendar year interval. What is the difference between this activity and the similar activity performed in Table 1-1? In Table 1-4, this table is complex and the detailed maintenance activities in this particular table is puzzling when compared to the more generic detail in the other tables within this section. For example, an incorrect operation due to a deteriorated signal from a CT or VT has a higher probability than a failure of a battery bank to perform when called upon. In Table 1-5, Please provide clarity on the "Unmonitored Control circuitry associated with protective functions" component attribute. This would most likely be an FAQ item.
No
The VSL for R2 need to be adjusted since "Condition Based Maintenance" has been removed from the standard.
Yes
1. The discussions surrounding implementing the PSMP on pages 10 and 11 of the clean copy are troublesome for the following reasons. On Pg. 10, under Sec. 8.1, the 4th bullet item states "If your PSMP (plan) requires more activities then you must perform and document to this higher standard". This statement's use of the word "must" implies that an entity will be audited to their documented maintenance practices, even if those practices exceed the requirements of the PRC-005 standard. The PRC-005 standard, and any standard, details the minimum requirements that must be met to achieve a certain reliability goal. For example, if an entity's program states that it will do maintenance on a relay every 4 years, but the standard only requires maintenance every 6 years, the entity shall be held compliant to the standard's 6 year interval. If the entity in this example decides that in year 4 it must delay its maintenance to year six, that should be allowable since the standard PRC-005-2 requires maintenance every 6 years. 2. Since the standard no longer discusses Condition Based Maintenance, it should be removed from the reference document for consistency.
No
Yes
REQUIREMENTS Requirement R1 – Subpart 1.5 – We do not support this subpart for the following reasons and offer the following suggestions: To satisfy R1.5, a calibration tolerance or other equivalent parameter would have to be established for each item included in the definition. Many devices which may have similar functionality may also have different performance criteria that would preclude the use of a "one size fits all" calibration tolerance. Many of these criteria are provided by the manufacturer and often vary by manufacturer for a similar device. It would be very difficult to specify in your program all of the calibration tolerances or other equivalent parameters associated with the protection system components Therefore, we suggest the team delete Subpart 1.5 of Req. R1, and revise Subpart 4.2 of Req. R4 to read: "Initiate resolution of any identified maintenance correctable issues at the conclusion of maintenance activities for Protection System components." IMPLEMENTATION PLAN On pg. 2 of the implementation plan, under "Retirement of Existing Standards", the statement "The existing standards PRC-005-1, PRC-008-0, PRC-011-0, and PRC-017-0 shall be retired upon regulatory approval of PRC-005-2" is not accurate. Since the new PRC-005-2 standard allows for at least 12 months to become compliant with Requirement R1 – establish a Protection System Maintenance Program (PSMP) -the existing standards are still effective during this time. Additionally, we have concerns with the "General Considerations" describing protocols for compliance audits conducted during the allowed 12 month development period of the PSMP and that entities could specify for "each component type" whether maintenance of that component is being performed according to its maintenance program under the "retired" PRC maintenance standards or the new PRC-005-2 standard. In our view, this creates a level of compliance complexity for both the Registered Entity and Regional Entity that should be avoided in the transition to PRC-005-2. FirstEnergy proposes that the Implementation Plan state that the existing standards remain in effect for one year past applicable approval (NERC Board or Regulatory) and that they are retired coincident with the one-year transition to Requirement R1 of PRC-005-2 which would establish all Registered

Entities having a new PSMP per the expectations of PRC-005-2. At that time all entities would be required to be under the new PRC-005-2 standard and begin implementing their PSMP per the phased-in Implementation Plan for the remaining requirements. To summarize, per our above discussion we propose the team perform the following: 1. Revise the Implementation Plan section titled "Retirement of Existing Standards" section to read as follows: "The existing Standards PRC-005-1, PRC-008-0, PRC-011-0 and PRC-017-0 shall be retired on the first day of the first calendar quarter twelve months following applicable regulatory approvals, or in those jurisdictions where no regulatory approval is required, on the first day of the first calendar quarter 12 months following the Board of Trustees adoption" 2. Remove the entire "General Considerations" section from the Implementation Plan. The bulleted item under the section titled "Implementation plan for R1" has a discrepancy in the time allowed to implement R1 between entities applicable to regulatory approval of the standard versus those in jurisdictions where no regulatory approval is needed and base their adherence per the Board of Trustee adoption. Please revise to reflect a 12 month transition period for each. DEFINITIONS Maintenance Correctable Issue - This is a maintenance standard and this concept gets into the long term repair activities. Is this really appropriate in this standard? If NERC feels repairing is critical to BES reliability, then they should probably initiate a standard in that area. Component – Regarding the phrase "local zone of protection", why is this in quotes? Is there a narrow definition for this? If so, this term should be defined also. DATA RETENTION SECTION 1.3 Regarding the data retention for Req. R3 and R4, it is not practical to keep potentially 24 years of data for components that are maintained every 12 years. We suggest rewording this to "For R3 and R4, Transmission Owner, Generator Owner, and Distribution Provider shall each keep documentation of the most recent performances of each distinct maintenance activity for the Protection System components, or to the previous scheduled audit date, whichever is longer". ATTACHMENT A – FOOTNOTE 1 This footnote regarding countable events needs to be revised to match the definition of countable events found at the beginning of the standard.

Individual

Martin Bauer

US Bureau of Reclamation

No Comment

Yes

The tables rely on a reference document which is not a part of the standard and as such may be altered without due process. Either the relevant text from the reference needs to be inserted into the standard or the reference itself incorporated into the standard. Specific References such as

Yes

The supplemental reference provides significant clarity to the intent and application of standard; however, in doing so, it reveals conflicts and ambiguity in the text of the standard. It is suggested that some of the clarifying language be inserted into the text of the standard.

No Comment

Yes

The concept of including definitions in this standard that are not a part of the Glossary of Terms will create a conflict with other standards that choose to use the term with a different meaning. This practice should be disallowed. If a definition is be introduced it should be added to the Glossary of Terms. This concept was not provided to industry for comment when the modificatios to the Definition of Protection System was introduced. Additional related to this practice are included later on. The Term "Protective Relays" is overly broad as it is not limited to those devices which are used to protect the BES. In the reference provided to the standard, the SDT definied "Protective Relays" as "These relays are defined as the devices that receive the input signal from the current and voltage sensing devices and are used to isolate a faulted portion of the BES. " The Definition for "Protective Relays" as well as the components associated with the them should be associated with the protection of the BES in the definition. The Section 2.4 of the attached reference and the recent FERC NOPR are in conflict with the definition of "Protective Relays" which include lockout relays and transfer trip relays "The relays to which this standard applies are those relays that use measurements of voltage, current, frequency and/or phase angle and provide a trip output to trip coils, dc control circuitry or associated communications equipment. This Draft 2: April3: November 17, 2010 Page 5 definition extends to IEEE device # 86 (lockout relay) and IEEE device # 94 (tripping or trip-free relay) as these devices are tripping relays that respond to the trip signal of the protective relay that processed the signals

from the current and voltage sensing devices." The definition should be revised to relfect that is really intended. The SDT as created an implied definition by specifically defining DC circuits associated with the trip function of a "Protective Relay" but failing to specifically define voltage and current sensing circuits providing inputs to "Protective Relays". The team clearly intended the circuits to be included but the definition does not since it only refers the the "voltage and current sensing devices". Starting with the Definitions and continuing through the end of the document, terms that have been defined are not capitalized. This leaves it ambiguous as to whether the defined term is to be applied or it is a generic reference. Only defined terms "Protection System Maintenance Program" and "Protection System" are consistently capitalized. Protection System Maintenance Program (PSMP) definition: The Restore bullet should be revised to read as follows: "Return malfunctioning components to proper operation by repair or calibration during performance of the initial on-site activity." Add the following at the end of the PSMP definition: “NOTE: Repair or replacement of malfunctioning Components that require follow-up action fall outside of the PSMP, and are considered Maintenance Correctable Issues.” Protection System (modification) definition: The term "protective functions" that is used herein should be changed to "protective relay functions" or what is meant by the phrase should become a defined term, as it is being used as if it is a well known well defined, and agreed upon term. The first bullet text should be revised to read as follows: "Protective relays that monitor BES electrical quantities and respond when those quantities exceed established parameters," the last two bullets should be reversed in order and modified to read as follows: • control circuitry associated with protective relay functions through the trip coil(s) of the circuit breakers or other interrupting devices, and • station dc supply (including station batteries, battery chargers, and non-battery-based dc supply) associated with the preceding four bullets. Statement between the Protection System (modification) definition and the Maintenance Correctable Issue definition; Is this a NERC accepted practice? There does not appear to be a location in the standard for defining terms. Having terms that are not contained in the "Glossary of Terms used in NERC Reliability Standards," and are outside of the terms of the standards, and yet are necessary to understand the terms of the Requirements is not acceptable. They would become similar to the reference documents, and could be changed without notice. Maintenance Correctable Issue definition: The last sentence should be modified to read as follows: "Therefore this issue requires follow-up corrective action which is outside the scope of the Protection System Maintenance Program and the Standard PRC-005-2 defined Maximum Maintenance Intervals." The definition could also be easily clarified to read "Maintenance Correctable Issue – Failure of a component to operate within design parameters such that it cannot be restored to functional order by repair or calibration; therefore requires replacement." This ensures that any action to restore the equipment, short of replacement, is still considered maintenance. Otherwise ambiguity is introduced as what "maintenance" is. Countable Event definition: An explanation should be made that this is a part of the technical justification for the ongoing use of a performance-based Protection System Maintenance Program for PRC-005. Insert the phrase "Standard PRC-005-2" before the term "Tables 1-1…" 4. Applicability: 4.2. Facilities: 4.2.5.4 and 4.2.5.5: Delete these two parts of the applicability. Station service transformer protection systems are not designed to provide protection for the BES. Per PRC-005-2 Protection System Maintenance Draft Supplementary Reference, Nov. 17 2010, Section 2.3 - Applicability of New Protection System Maintenance Standards: “The BES purpose is to transfer bulk power. The applicability language has been changed from the original PRC-005: “...affecting the reliability of the Bulk Electric System (BES)…” To the present language: “… and that are applied on, or are designed to provide protection for the BES.” The drafting team intends that this Standard will not apply to “merely possible” parallel paths, (sub-transmission and distribution circuits), but rather the standard applies to any Protection System that is designed to detect a fault on the BES and take action in response to that fault.” Station Service transformer protection is designed to detect a fault on equipment internal to a powerplant and not directly related to the BES. In addition, many Station Service protection ensures fail over to a second source in case of a problem. Thus station service transformer protection system is a powerplant reliability issue and not a BES reliability issue. As such station service transformer protection should not be included in PRC 005 2. In addition, the SDT appears to have targeted generation station service without regard to transmission systems. If generating station service transformers are that important, then why are substation/switchyard station service transformers not also important? B. Requirements Should the sub requirements have the "R" prefix? R4. Change the phrase "… PSMP, including identification of the resolution of all …" to read "…PSMP including identification, but not the resolution, of all …". General comment PRC005-2 is very specific in listing the maximum maintenance interval but is still very vague in listing the specific components to test. Suggest adding the following to the standard. A

sample list of devices or systems that must be verified in a generator to meet the requirements of this Maintenance Standard: Examples of typical devices and relay systems that respond to electrical quantities and may directly trip the generator, or trip through a lockout relay may include but are not necessarily limited to: • Fault protective functions, including distance functions, voltage-restrained overcurrent functions, or voltage-controlled overcurrent functions • Loss-of-field relays • Volts-per-hertz relays • Negative sequence overcurrent relays • Over voltage and under voltage protection relays • Stator-ground relays • Communications-based protection systems such as transfer-trip systems • Generator differential relays • Reverse power relays • Frequency relays • Out-of-step relays • Inadvertent energization protection • Breaker failure protection • lockout or tripping relays For generator step up transformers, operation of any the following associated protective relays frequently would result in a trip of the generating unit and, as such, would be included in the program: • Transformer differential relays • Neutral overcurrent relay • Phase overcurrent relays In the Lower, Moderate and Severe VSL descriptions, in addition to not being capitalized, the defined term Maintenance Correctable Issues should not be hyphenated. In Attachment A Section 2 Page 51 should be modified as follows: 2. Maintain the components in each segment according to the time-based maximum allowable intervals established in Tables 1-1 through 1-5 until results of maintenance activities for the segment are available for a minimum of either 30 individual components of the segment or a significant statistical population of the individual components of a segment." Without the modifiction the requirement unfairly target smaller entities. This will allow smaller entities to determine adjust its time based intervals if its experience with an appropriate number components supports it. In Attachment A Section 5 Page 51 should be modified as follows: 5. Determine the maximum allowable maintenance interval for each segment such that the segment experiences countable events on no more than 4% of the components within the segment, for the greater of either the last 30 components maintained or a significant statistical population of the individual components of a segment maintained in the previous year. Without the modifiction the requirement unfairly target smaller entities. This will allow smaller entities to determine adjust its time based intervals if its experience with an appropriate number components supports it. In Attachment A Section 5 Page 52 should be modified as follows: 5. Using the prior year's data, determine the maximum allowable maintenance interval for each segment such that the segment experiences countable events on no more than 4% of the components within the segment, for the greater of either the last 30 components maintained or a significant statistical population of the individual components of a segment components maintained in the previous year. Without the modifiction the requirement unfairly target smaller entities. This will allow smaller entities to determine adjust its time based intervals if its experience with an appropriate number components supports it.
Group
City of Austin DBA Austin Energy
Reza Ebrahimian
Yes
The Requirement R1.5. is vague and the intent is not well understood. We recommend it be rewritten to clarify the intent. In the Requirement R2. the phrase "… shall verify those components possess the monitoring attributes …" is too vague and not easily understandable. We recommend this requirement be rewritten.
Individual
Kenneth A. Goldsmith
Alliant Energy
Yes
Yes
No

No
Yes
In the Purpose statement delete “affecting” and replace it with “protecting”. The purpose of the standard deals with systems that protect the BES. In sections R1 and R4.2.1 delete “applied on” as unneeded and potentially confusing. The goal is to cover Protection Systems designed to protect the BES. Alliant Energy believes that Article 1.4 needs to be deleted from the standard. It is redundant and serves no purpose. Alliant Energy believes that Article 1.5 needs to be deleted from the standard. There is a major concern on what an “acceptable parameter” is and how it would be interpreted by the Regional Entities. Section 4.2 Applicable Facilities: We are concerned with this paragraph being interpreted differently by the various regions and thereby causing a large increase in scope for Distribution Provider protection systems beyond the reach of UFLS or UVLS. 4.2.1 Protection Systems applied on, or designed to provide protection for, the BES. The description is vague and open for different interpretations for what is “applied on” or “designed to provide protection”. According to the November 17, 2010 Draft Supplementary Reference page 4, the Standard will not apply to sub-transmission and distribution circuits, but will apply to any Protection System that is designed to detect a fault on the BES and take action in response to the fault. The Standard Drafting Team does not feel that Protection Systems designed to protect distribution substation equipment are included in the scope of this standard; however, this will be impacted by the Regional Entity interpretations of ‘protecting” the BES. Most distribution protection systems will not react to a fault on the BES, but are caught up in the interpretation due to tripping a breaker(s) on the BES. We request clarification that the examples listed below do not constitute components of a BES Protection System: 1. Older distribution substations that lack a transformer high side interrupting device and therefore trip a transmission breaker or a portion of the transmission system or bus, or 2. Newer distribution substations that contain a transformer high side interrupting device but also incorporate breaker failure protection that will trip a transmission breaker or a portion of the transmission system or bus. Since distribution provider systems are typically radial and do not contain the level of redundancy of transmission or generation protection systems, it is not cheap, safe, maintaining BES reliability, or easy to coordinate companies to test these protection systems to the level of PRC-005-2 draft recommendations. Section F Supplemental Reference Documents: The references listed in this section refer to 2009 dates and do not match with the 2010 reference documents supplied for comment. Table 1-4 Component Type Station dc Supply: • “Any dc supply for a UFLS or UVLS system” - This should not have the same testing interval as control circuits, but should have a maximum maintenance period as other dc supplies do. • Replace the words “perform as designed” on page 14 of Table 1-4 with “operate within defined tolerances.” Table 1-5 Component Type Control Circuitry: • This table allows for unmonitored trip coils for UFLS or UVLS breakers to have “no periodic maintenance”. The PRC-005-2 Supplemental Frequently Asked Question #7B and #7C give excellent reasoning for not requiring maintenance on the trip coil component due to the larger number of failures that would be required to have any substantial impact to the BES as well as the statement that distribution breakers are operated often on just fault clearing duty already. We believe that the unmonitored control circuitry has the same level of minimal BES impact and is also being tested each time the distribution breaker undergoes fault clearing duty. With this logic, we do not see why there would be different maintenance requirements for these two components. • Alliant Energy is concerned that the addition of mandatory 86 and 94 auxiliary lockout relays (Electromechanical trip or Auxiliary devices) will force entire bus outages that will compromise the BES reliability more by forcing utilities across the US to unnecessarily take multiple non-faulted BES elements out of service. Such testing is also likely to introduce human error that will cause outages such as items outlined in the NERC lessons learned” and therefore such testing will result in more outages than actual failures. An equivalent non-destructive test needs to be identified to allow entities to sufficiently trace and test trip paths without taking multiple substation line outages to physically test a lockout or breaker failure scheme.
Group
PacifiCorp
Sandra Shaffer
Yes

Yes
Group
Florida Municipal Power Agency
Frank Gaffney
Yes
No
The VRF of R1 should be Low since the attached tables are essentially the PSMP.
Yes
Yes
Yes
UFLS and UVLS maintenance and testing is greatly expanded, e.g., we interpreted PRC-008/011 as being only the UFLS/UVLS equipment. The new PRC-005 sweeps in other protection system components, e.g., communications (probably not applicable), voltage and current sensing devices (e.g., instrument transformers), Station DC supply, control circuitry. What's key about this is that these components are all part of distribution system protection, so, these activities would not be covered by other BES protection system maintenance and testing. I'm sure we are testing batteries and the like, but, we are probably not testing battery chargers and control circuitry, and, in many cases distribution circuits are such that it is very difficult, if not impossible, to test control circuitry to the trip coil of the breaker without causing an outage of the customers on that distribution circuit. There is no real reliability need for this either. Unlike Transmission and Generation Protection Systems which are needed to clear a fault and may only have one or two back-up systems, there are thousands and thousands of UFLS relays and if one fails to operate, it will not be noticeable to the event. It does make sense to test the relays themselves in part to ensure that the regio0nsl UFLS program is being met, but, to test the other protection system components is not worthwhile. Note that DC Supplies and most of the control circuitry of distribution lines are "tested" frequently by distribution circuits clearing faults such as animals, vegetation blow-ins, lightning, etc., on distribution circuits, reducing the value of testing to just about null. However, this version is better than prior versions because it essentially requires the entity to determine it's own period of maintenance and testing for UFLS/UVLS for DC Supply and control circuitry. Applicability, 4.2.1, should reflect the Y&W and Tri-State interpretation (Project 2009-17) of "transmission Protection System" and should state: "Protection Systems applied on, or designed to provide protection for a BES Facility and that trips a BES Facility" Applicability, 4.2. - does not reflect the interpretation of Project 20009-10 that excludes non-electrical protection (e.g., sudden pressure relays) and auxiliary relays. Because the definition of Protection System (recently approved) does not clearly exclude "non-electrical" protection, the Applicability section should. For instance, a vibration monitor, steam pressure, etc. protection of generators, sudden pressure protection of transformers, etc. should not be included in the standard. An alternative is to change the definition of Protection System to make sure it only includes electrical Table 1-4 requires a comparison of measured battery internal ohmic value to battery baseline. Battery manufacturers typically do not provide this value and one manufacturer states that the baseline test are to be performed after the battery has been in regular float service for 90 days. It is unclear how to comply with the requirement for the initial 90 days. Additionally, we would recommend that this requirement be modified to permit an entity to establish a “baseline” value based on statistical analysis of multiple test results specific to a given battery manufacturer/model. Several commenters previously expressed their concerns with performing capacity tests. While this may just be an entity’s preference, allowing an entity to establish a baseline at some point beyond the initial installation period would give entities the option of using the internal resistance test in lieu of a capacity test.

Small entities with only one or two BES substations may not have enough components to take advantage of the expanded maintenance intervals afforded by a performance-based maintenance program. Aggregating these components across different entities doesn't seem too logical considering the variations at the sub-component level (wire gauge, installation conditions, etc.) Trip circuits are interconnected to perform various functions. Testing a trip path may involve disabling other features (i.e. breaker failure or reclosing) not directly a part of the test being performed. Temporary modifications made for testing introduce a chance to accidentally leave functions disabled, contacts shorted, jumpers lifted, etc. after testing has been completed. Trip coils and cable runs from panels to breaker can be made to meet the requirements for monitored components. The only portions of the circuitry where this may not be the case is in the inter- and intra-panel wiring. Because such portions of the circuitry have no moving parts and are located inside a control house, the exposure is negligible and should not be covered by the requirements. Entities will be at increased compliance risk as they struggle to properly document the testing of all parallel tripping paths. The interconnected nature of tripping circuits will make it difficult to count the number of circuits consistently for the purpose of calculating a VSL.
Individual
Martyn Turner
LCRA Transmission Services Corporation
No
It would help to add a column to the left labeled Category. I.E. a relay could be classified under Category 1 attributes unmonitored or Cat 2, Cat 3. Table 1-4, Station DC is very difficult to follow.
Yes
Yes
Well written and helpful document. In Section 8.1, the document states that if your PSMP requires activities more often than the Tables maximum, then you must perform to that higher standard. While it is understandable that an entity may desire to maintain their PRS at a higher level, they should not be fined or penalized for achieving less than their standard but within the intervals stated in the Tables. This point should be clarified, preferably within the standard itself.
Yes
No
Group
PSEG Companies ("Public Service Enterprise Group Companies")
Kenneth D. Brown
Yes
No comment
Yes
Figure 2 "typical generation system" shows a typical auxiliary medium voltage bus, in addition to the color coded elements suggest that a very distinct line of demarcation (dark dotted line) be added to the figure that defines the elements associated with the MV bus protection served by the station Aux Transformer and unit aux transformer are not part of the BES- PSMP PRC5 requirements. Also see comment 5 below; we suggest that the station service transformer must be connected to BES for inclusion in standard requirements. Suggest adding an explanation note to figure 2 to clarify this.
Yes
Suggest that the section 5 – station DC supply have some specific examples added that would be acceptable methods for verifying the "state of charge" as required by standard table 1-4.
Yes
The facilities listed in 4.2.5.5 include protection systems for "system connected" station service transformers associated with generators that are part of the BES. If a station service transformer is connected to a non BES bus then it would still fall under the PRC5 applicability requirements as

written. The FAQs discuss relays associated with station auxiliary loads as not included in the program requirements. The non BES connected transformers should be included in that same category of equipment. From the FAQ's - "Relays which trip breakers serving station auxiliary loads such as pumps, fans, or fuel handling equipment, etc., need not be included in the program even if the loss of the those loads could result in a trip of the generating unit. Furthermore, relays which provide protection to secondary unit substation (SUS) or low switchgear transformers and relays protecting other downstream plant electrical distribution system components are not included in the scope of this program even if a trip of these devices might eventually result in a trip of the generating unit." Suggest the following added details be considered to be consistent with intent of BES connected facilities. Revise Description 4.2.5.5 as follows: "Protection systems for BES system connected station service transformers connected for generators that are part of the BES". With respect to DC supply systems (batteries, chargers),the implementation plan is too aggressive. Some battery checks will have to be done on a 3 month interval, and entities will be required to be compliant with this new frequency in 1 Calendar year. This timeframe is unreasonable and needs to be pushed back to at least 2 years. PSEG is also asking for clarification to the supplemental reference document: On page 4, section 2.3 it states that the standard is designed to ONLY include "relays that detect a fault on the BES and take action in response to that fault". If PSEG is interpreting this correctly, this is a massive shift from the existing PRC-005-1 standard. The existing PRC-005-1 includes all distribution relays that trip a BES breaker to be part of the scope. In this revision, PRC-005-2 would exclude those distribution relays if they are designed to act for faults on the distribution system. PSEG would fully support this interpretation. PSEG would like this clarified and confirmed. This is very important.
Group
Southern Company Transmission
JT Wood
Yes
The Standard Drafting Team should be commended for making the tables much easier to understand
No
We disagree with the inclusion of the VSLs, VRFs, and time Horizons associated with the new Requirements 1.5 and 4.2
Yes
Page 11 and 12, (Additional Notes for Table 1-1 through 1-5) Comment ->> The standard does not reference these notes. Should these notes be referenced and included in the Standard? Page 12, Additional Notes for Table 1, item #7 ("performing an operational trip test") Comment ->> Standard does not state that an operational/full functional test is required. Please clarify. Page 22, 15.3, Control Circuitry Functions, paragraph 1 ("verify, with a volt-meter, the existence of proper voltage at the open contacts") Comment ->> The example of measuring the proper voltage with a volt-meter at the open contacts to verify the circuit indicates that the 12-year "full functional" trip test of control circuits is not required. Please clarify. Page 22, 15.3, Control Circuitry Functions, paragraph 3 ("UVLS or UFLS scheme are excluded from the tripping requirement, but not from the circuit test requirements") Comment ->> This indicates to me that measuring the proper voltage with a volt-meter at the open contacts will verify the circuit. Please confirm. Please clarify – If a suitable monitoring system is installed that verifies every parallel trip path then the manual-intervention testing of those parallel trip paths can be "extended beyond 12 years". Standard indicates that no periodic maintenance is required. Consider changing "extended beyond 12 years" to "eliminated". Page 23, 15.3, Control Circuitry Functions, paragraph 5 ("When verifying the operation of the 94 and 86 relays each normally-open contact that closes to pass a trip signal must be verified as operating correctly.") Comment ->> This indicates that we must verify that trip and auxiliary device contacts change state. Please confirm. The standard does not state that the contacts must be verified to change states. If this is required, please add to the standard.
Yes
Page 7, L. ("verify operation of the relay inputs …") Comment ->> Clarification needed. Standard states that each input should be "picked up" or "turned on and off". Do you have to change states of the input contact(s) or can you just jumper positive to the input(s) to verify that the microprocessor relay verifies this change of state? Page 10, 4.E ("What does functional (or operational) trip test include?") Comment ->> The words "functional (or operational) trip test" are not in the Standard. Is this required? If so, please clarify this in Standard. If not, please remove. (Reference comment

regarding “verify all paths of the control and trip circuits” on page 17 of standard.) Page 18, 7. (Distributed UVLS and UFLS system.) and Page 19 8. (Centralized UVLS and UFLS system.) Comment ->> Standard does not specify “distributed” or “centralized” UVLS and UFLS systems. Please consider combining section 7 & 8, omitting items 7.C., 8.E., and omitting “distributed” and “centralized” references on pages 18 and 19.
Yes
Page 5, 4.2. (“or initiate resolution”) Comment ->> Standard does not specify to “follow through” to completion. Is record of completion required? Page 5, 1.5. (1.5. Identify calibration tolerances or other equivalent parameters for each Protection System component type that establish acceptable parameters for the conclusion of maintenance activities.) Comment ->> This is too vague, broad, general and all encompassing. For example, what is the calibration tolerance for “control circuitry” which is made up of many things such as wiring, auxiliary relays, trip coils, etc. We currently have calibration tolerances on electromechanical relays but not on all components of a protection system (communications systems, voltage and current sensing devices, station dc supply, control circuitry). To try to identify calibration tolerances or other equivalent parameters for each of these components would be extremely difficult and time consuming. Clarification is needed on what components or parts of components require calibration tolerances. Another option is to remove this requirement. Page 5, 4.5. (4.2. Either verify that the components are within the acceptable parameters established in accordance with Requirement R1, Part 1.5 at the conclusion of the maintenance activities, or initiate resolution of any identified maintenance correctable issues.) Comment ->> See comments above on 1.5. Clarification is needed on what is required to verify that the components are within acceptable parameters. We feel it should be adequate to provide a simple way to verify this requirement such as to include this in our maintenance procedure (equipment is to be left within tolerance), provide closed work order, show “checked” check box, provide a simple statement that this was completed, or etc. We feel that having to provide detailed data such as “as found” / “as left” values is too complicated and time consuming. Please clarify or consider removing this requirement. Page 6, M.4. (“and initiated resolution”) Comment ->> Standard does not specify to “follow through” to completion. Is record of completion required? Page 10, F.1 (July 2009) & F.2 (DRAFT 1.0 - June 2009) Comment ->> Need new dates and draft number. Page 11 (For microprocessor relays, verify operation of the relay inputs and outputs that are essential …) Comment ->> Does this require changing the state of the input contacts or can you just jumper voltage to the inputs and verify that the microprocessor relays acknowledged the change? Page 17 (“Verify electrical operation(1)of EM trip and auxiliary devices(2).”) Comment ->> (1) Is it required to verify that trip and auxiliary device contacts change state? If so, please state as a requirement. (2) We recommend that this requirement only includes EM aux LO / tripping relays that trip interrupting devices directly. Other EM aux relays such as BFI aux. relays should be excluded. Please state this clearly in the Standard. Note that these aux relays such as BFI aux relays are included in the “unmonitored control circuitry associated with protective functions” requirement and will be verified on a 12 year interval. (3) Please consider including an elementary diagram to show what is included. Page 17 (Verify all paths of the control and trip circuits.) Comment ->> Clarification needed. Is it required to perform a full functional test, i.e. trip breakers? Or is reading DC across trip contacts all that is required? Page 14 (Table 1.4) Change the maintenance interval for unmonitored station dc supply from “3 Calendar Months” to “4 times Annually”. This facilitate compliance to the standard by creating completion milestones for batteries at the end of each quarter of the year. Page 15 (Table 1.4 The standard requires the establishment of a battery baseline for cell/unit internal ohmic values and the comparison of impedance readings every 18 calendar months to that baseline. Due to the lack of original impedance readings at the time of installation of the battery. Since in many cases no such data is available; it needs to be made clear that establishing a baseline from , from manufacturer’s data, the most recent impedance test, or the first impedance test completed after the adoption of the new standard is acceptable
Individual
Terry Harbour
MidAmerican Energy
Yes
Yes

Yes
The Supplementary Reference should have clear disclaimers indicating that nothing in the reference is mandatory and enforceable.
Yes
The Frequently Asked Questions should have clear disclaimers indicating that nothing in the reference is mandatory and enforceable.
Yes
MidAmerican remains concerned that including requirements for testing of electromechanical trip or auxiliary devices (Table 1-5 Row 3) will in some cases require entire bus outages that will compromise the BES reliability due to the need for entities across the US to take multiple BES elements out of service during the testing. If this requirement is retained additional time should be included in the implementation plan to allow for system modifications, such as the installation of relay test switches, to potentially allow for this testing while minimizing testing outages. Clarify that in the definition of Component Type that Transmission Owners are allowed the latitude to designate their own definitions for each of the Component Types, not just control circuits. In the implementation schedule time periods are provided within which compliance deadlines and percentages of compliance are given. The following clarifications are recommended: 1. In calculating percentage of compliance for purposes of demonstrating progress on the implementation plan the percentages are calculated based on the total population of the protection system components that an entity has that fit the component category and allowable interval. 2. To obtain compliance with the percentage completion requirements of the implementation schedule an entity needs to have completed at least one prescribed maintenance activity of that component type and interval. In the purpose statement delete “affecting” and replace it with “protecting”. The purpose of the standard deals with systems that protect the BES. In sections R1 and R4.2.1 delete “applied on or” as unneeded and potentially confusing. The goal is to cover protection systems designed to protect. Clarify the meaning of “state of charge” on page 14 in Table 1-4. In Table 1-4 Component Type Station dc Supply, “Any dc supply for a UFLS or UVLS system” should have the same maximum maintenance period as other dc supplies. Table 1-5 Component Type Control Circuitry, the table allows for unmonitored trip coils for UFLS or UVLS breakers to have “no periodic maintenance”. The PRC-005-2 Supplemental Frequently Asked Question #7B and #7C give excellent reasoning for not requiring maintenance on the trip coil component due to the larger number of failures that would be required to have any substantial impact to the BES as well as the statement that distribution breakers are operated often on just fault clearing duty already. We believe that the unmonitored control circuitry has the same level of minimal BES impact and is also being tested each time the distribution breaker undergoes fault clearing duty. With this logic, we do not see why there would be different maintenance requirements for these two components.
Individual
Kirit Shah
Ameren
Yes
No
(1)The Lower VSL for all Requirements should begin above 1% of the components. For example for R4: “Entity has failed to complete scheduled program on 1% to 5% of total Protection System components.” PRC-005-2 unrealistically mandates perfection without providing technical justification. A basic premise of engineering is to allow for reasonable tolerances, even Six Sigma allows for defects. Requiring perfection may well harm reliability in that valuable resources will be distracted from other duties.
No
No
This document is helpful.
Yes
(1)We believe that R1.5 and R4.2 “Calibration tolerances or other equivalent parameters”

requirements should be removed. Neither the Supplement nor the FAQ address the expectation for them. While we agree that tolerances are needed and used, they need not be specified as part of this standard. (2) The Data retention is too onerous (a) For those components with numerous cycles between on-site audits, retaining and providing evidence of the two most recent distinct maintenance performances and the date of the others should be sufficient. Additionally, we are subject to self-certification, spot audits and/or inquiries at any time between on-site audits as well. (b) For those components with cycles exceeding on-site audit interval, retaining and providing evidence of the most recent distinct maintenance performance and the date of the preceding one should be sufficient. Auditors will have reviewed the preceding maintenance record. Retaining these additional records consumes resources with no reliability gain. (3) Definition of the BES perimeter should be included in accordance with Project 2009-17 Interpretation. (a)Facilities Section 4.2.1 “or designed to provide protection for the BES” needs to be clarified so that it incorporates the latest Project 2009-17 interpretation. The industry has deliberated and reached a conclusion that provides a meaningful and appropriate border for the transmission Protection System; this needs to be acknowledged in PRC-005-2 and carried forward. (4)System-cnnected station service transformers (4.2.5.5)should be ommited, because (a) Generating Plant system-connected Station Service transformers should not be included as a Facility because they are serving load. Omit 4.2.5.5 from the standard. There is no difference between a station service transformer and a transformer serving load on the distribution system. This has no impact on the BES, which is defined as the system greater than 100 kV. (b) system-connected station service transformers in the same table as well as from table-to-table can be overwhelming. This would help keep Regional Entities and System Owners from making errors. (5) Retention of maintenance records for replaced equipment should be ommitted. FAQ II 2B final sentence states that documentation for replaced equipment must be retained to prove the interval of its maintenance. We disagree with this because the replaced equipment is gone and has no impact on BES reliability; and such retention clutters the data base and could cause confusion. For example, it could result in saving lead acid battery load test data beyond the life of its replacement. (6) Battery inspection every 4 months is sufficient. IEEE battery maintenance standards call for quarterly inspections. These are targets, though, not maximums. An entity wishing to avoid non-compliance for an interval that might extend past three calendar months due to storms and outages must set a target interval of two months thereby increasing the number of inspections each year by half again. This is unnecessarily frequent. We suggest changing the maximum interval for battery inspections to 4 calendar months. For consistency, we also suggest that all intervals expressed as 3 calendar months be changed to 4 calendar months. (7) PSMP Implement Date should commence at the beginning of a Calendar year. This is the most practical way to transition assets from our existing PRC-005-1 plans. (8) Please clarify the meaning of “state of charge” for batteries. Does this mean specific gravity testing or what? (9) Please clarify that instrument transformer itself is excluded. Please clarify that the instrument transformer itself is excluded. The standard indicates that only voltage and current signals need to be verified in Table 1-3, but the recently approved Protection System definition wording can be mis-interpreted to mean they are included. FAQ 11.3.A is helpful.
Group
MRO's NERC Standards Review Subcommittee
Carol Gerou
Yes
Yes
No
No
Yes
In the Purpose statement delete “affecting” and replace it with “protecting”. The purpose of the standard deals with systems that protect the BES. In sections R1 and R4.2.1 delete “applied on” as unneeded and potentially confusing. The goal is to cover Protection Systems designed to protect the BES. The NSRS believes that Article 1.4 needs to be deleted from the standard. It is redundant and

serves not purpose. The NSRS believes that Article 1.5 needs to be deleted from the standard. There is a major concern on what an “acceptable parameter” is and how it would be interpreted by the Regional Entities. The NSRS believes that Article 4.2 needs to be deleted from the standard. There is no need for this article if Article 1.5 is deleted. Section 4.2 Applicable Facilities: We are concerned with this paragraph being interpreted differently by the various regions and thereby causing a large increase in scope for Distribution Provider protection systems beyond the reach of UFLS or UVLS. 4.2.1 Protection Systems applied on, or designed to provide protection for, the BES. The description is vague and open for different interpretations for what is “applied on” or “designed to provide protection”. According to the November 17, 2010 Draft Supplementary Reference page 4, the Standard will not apply to sub-transmission and distribution circuits, but will apply to any Protection System that is designed to detect a fault on the BES and take action in response to the fault. The Standard Drafting Team does not feel that Protection Systems designed to protect distribution substation equipment are included in the scope of this standard; however, this will be impacted by the Regional Entity interpretations of ‘protecting” the BES. Most distribution protection systems will not react to a fault on the BES, but are caught up in the interpretation due to tripping a breaker(s) on the BES. Section F Supplemental Reference Documents: The references listed in this section refer to 2009 dates and do not match with the 2010 reference documents supplied for comment. Table 1-4 Component Type Station dc Supply: • “Any dc supply for a UFLS or UVLS system” - This should not tied to the same testing interval as control circuits. The dc supply system is significantly different from control circuits and should have a maximum maintenance period as other dc supplies do. • Replace the words “perform as designed” on page 14 of Table 1-4 with “operate within defined tolerances.” Table 1-5 Component Type Control Circuitry: • This table allows for unmonitored trip coils for UFLS or UVLS breakers to have “no periodic maintenance”. “Unmonitored control circuitry associated with protective functions” should also have an exclusion for UFLS and UVLS circuitry that would allow for “no periodic maintenance”. • There is a concern that requiring the electrical testing and maintenance of Electromechanical trip or Auxiliary devices will force entire bus outages to be scheduled, which will compromise the BES reliability more by forcing utilities across the US to unnecessarily take multiple non-faulted BES elements out of service. Such testing is also likely to introduce human error that will cause outages such as items outlined in the NERC lessons learned” and therefore such testing will result in more outages than actual failures.

NERC
NORTH AMERICAN ELECTRIC RELIABILITY CORPORATION

Consideration of Comments on Initial Ballot — Protection System Maintenance and Testing (Project 2007-17)
Date of Initial Ballot: December 10 – 20, 2010

Summary Consideration: Many commenters opposed R1 part 1.5 and the associated text, and the SDT responded by removing this text. Most of these comments were duplicates of those submitted in response to the formal comment period; the SDT responses are duplicated as well. Please see the Summary Consideration for each of the posted questions within the Consideration of Comments.

If you feel that the drafting team overlooked your comments, please let us know immediately. Our goal is to give every comment serious consideration in this process. If you feel there has been an error or omission, you can contact the Vice President and Director of Standards, Gerry Adamski, at 609-452-8060 or at gerry.adamski@nerc.net. In addition, there is a NERC Reliability Standards Appeals Process.[1]

Voter	Entity	Segment	Vote	Comment
Rodney Phillips	Allegheny Power	1	Negative	Allegheny Power applauds the hard work that the Standards Draft Team has exhibited in producing a clear and enforceable standard that will increase the reliability of the Bulk Electric System. However, the addition of requirement 1.5 is such a significant change in scope from the last draft that a further review of the potential impact and any implementation concerns is required by AP and the industry in general before we can consider voting in-favor of this standard.
Response: **Thank you for your comments. The SDT has determined that the fundamental concerns of Requirement R1, Part 1.5 and the associated changes are addressed within the PSMP definition, and that Requirement R1, Part 1.5 is not necessary; therefore, it has been removed. Requirement R4 has also been re-drafted to address various related concerns noted within comments. The associated VSL has also been revised. Please see Supplementary Reference Document, Section 8 for a discussion of this.**				
Kirit S. Shah	Ameren Services	1	Negative	(1)We believe that R1.5 and R4.2 "Calibration tolerances or other equivalent parameters" requirements should be removed. Neither the Supplement nor the FAQ address the expectation for them. While we agree that tolerances are needed and used, they need not be specified as part of this standard. (2)
Response: **Thank you for your comments. The SDT has determined that the fundamental concerns of Requirement R1, Part 1.5 and the associated changes are addressed within the PSMP definition, and that Requirement R1, Part 1.5 is not necessary; therefore, it has been removed. Requirement R4 has also been re-drafted to address various related concerns noted within comments. The associated VSL has also been revised. Please see Supplementary Reference Document, Section 8 for a discussion of this.**				
Paul B. Johnson	American Electric Power	1	Negative	Restructured Tables: 1) Table 1.5 (Control Circuitry), row 4, indicates a maximum interval of 12 years for unmonitored control circuitry, yet other portions of control circuitry have a maximum interval of 6 years. AEP does not understand the rationale for the difference in intervals, when in most cases, one verifies the other. Also, unmonitored control circuitry is capitalized in row 4 such that it infers a defined term. 2) In the first row of table 1-4 on page 16, it is difficult to determine if it is a cell that wraps from the previous page or is a unique row. This is important

[1] The appeals process is in the Reliability Standards Development Procedure: http://www.nerc.com/files/RSDP_V6_1_12Mar07.pdf.

Voter	Entity	Segment	Vote	Comment
				because the Maximum Maintenance Intervals are different (i.e. 18 months vs 6 years). It is difficult to determine to which elements the 6 year Maximum Maintenance Interval applies. AEP suggests repeating the heading "Monitored Station dc supply (excluding UFLS and UVLS) with: Monitor and alarm for variations from defined levels (See Table 2):" for the bullet points on this page. VSLs, VRFs and Time Horizons: 3) The VSL table should be revised to remove the reference to the Standard Requirement 1.5 in the R1 "High" VSL. 4) All four levels of the VSL for R2 make reference to a "condition-based PSMP." However, nowhere in the standard is the term "condition-based" used in reference to defining ones PSMP. The VSL for R2 should be revised to remove reference to a condition-based PSMP; alternatively the Standard could be revised to include the term "condition-based" within the Standard Requirements and Table 1. 5) In multiple instances, Table 1 uses the phrase "No periodic maintenance specified" for the Maximum Maintenance Interval. Is this intended to imply that a component with the designated attributes is not required to have any periodic maintenance? If so, the wording should more clearly state "No periodic maintenance required" or perhaps "Maintain per manufacturers recommendations." Failure to clearly state the maintenance requirement for these components leaves room for interpretation on whether a Registered Entity has a maintenance and testing program for devices where the Standard has not specified a periodic maintenance interval and the manufacturer states that no maintenance is required. FAQ and Supplementary Reference: 6) With such a complex standard as this, the FAQ and Supplementary Reference documents do aid the Protection System owner in demystifying the requirements. But AEP holds strong doubt on how much weight the documents carry during audits. It would be better to include them as an appendix in the actual standard, but in a more compact version with the following modifications: a) Section 5 of the Supplementary Reference, refers to "condition-based" maintenance programs. However, nowhere in the standard is the term "condition-based" used in reference to defining ones PSMP. The Supplementary Reference should be revised to remove reference to a condition-based PSMP; alternatively the Standard could be revised to include the term "condition-based" within the Standard Requirements and Table 1.

Voter	Entity	Segment	Vote	Comment
				b) Section 15.7, page 26, appears to have a typographical error "...can all be used as the primary action is the maintenance activity..." c) Figure 2 is difficult to read. The figure is grainy and the colors representing the groups are similar enough that it is hard to distinguish between groups. 7) "Frequently-Asked Questions": With such a complex standard as this, the FAQ and Supplementary Reference documents do aid the Protection System owner in demystifying the requirements. But AEP holds strong doubt on how much weight the documents carry during audits. It would be better to include them as an appendix in the actual standard, but in a more compact version with the following modifications: a) The section "Terms Used in PRC-005-2" is blank and should be removed as it adds no value. b) Section I.1 and Section IV.3.G reference "condition-based" maintenance programs. However, nowhere in the standard is the term "condition-based" used in reference to defining ones PSMP. The FAQ should be revised to remove reference to a condition-based PSMP; alternatively the Standard could be revised to include the term "condition-based" within the Standard Requirements and Table 1. c) The second sentence to the response in Section I.1 appears to have a typographical error "... an entity needs to and perform ONLY time-based...". 8) General: a) Standards Requirement 1.5 and the reference to R1.5 in Requirement 4.2 should be removed. Specifying calibration tolerances for every protection system component type, while a seemingly good idea, represents a substantial change in the direction of the standard. It would be very onerous for companies to maintain a list of calibration tolerances for every protection system component type and show evidence of such at an audit. AEP believes entities need the flexibility to determine what acceptance criteria is warranted and need discretion to apply real-time engineering/technician judgment where appropriate. b) Three different types of maintenance programs (time-based, performance-based and condition-based) are referenced in the standard or VSLs, yet the time-based and condition-based programs are neither defined nor described. Certain terms defined within the definition section (such as Countable Event or Segment) only make sense knowing what those three programs entail. These programs should be described within the standard itself and not assume a knowledge of material in the Supplementary

Voter	Entity	Segment	Vote	Comment
				Reference or FAQ. c) "Protective relay" should be a defined term that lists relay function for applicability. There are numerous 'relays' used in protection and control schemes that could be lumped in and be erroneously included as part of a Protection System. For example, reclosing or synchronizing relays respond to voltage and hence could be viewed by an auditor as protective relays, but they in fact perform traditional control functions versus traditional protective functions.

Response: **Thank you for your comments.**

1. **The 6-year activities are all related to components with "moving parts", and the 12-year activities are related to the other portions of the control circuitry. The capitalized term has been corrected.**
2. **Table 1-4 has been modified in consideration of your comments.**
3. **The SDT has determined that the fundamental concerns of Requirement R1, Part 1.5 and the associated changes are addressed within the PSMP definition, and that Requirement R1, Part 1.5 is not necessary; therefore, it has been removed. Requirement R4 has also been re-drafted to address various related concerns noted within comments. The associated VSL has also been revised.**
4. **The SDT concluded that Requirement R2 is redundant with R1, Part 1.4, and has deleted R2 (together with the associated Measure and VSL).**
5. **If the indicated monitoring attributes are present, no "hands-on" periodic maintenance is required, as the monitoring of the component is providing a continuing indication of its functionality.**
6. **The discussion within the Supplementary Reference and FAQ are informative, not normative, and thus do not belong as part of the standard.**
   - **A. The Supplemental Reference Document discusses condition-based maintenance in a conceptual manner, as a generally-recognized term. The SDT did make some changes within the Supplemental Reference document to clarify the manner in which condition-based maintenance is discussed.**
   - **B. This clause has been corrected.**
   - **C. A higher-quality version of Figure 2 has been substituted.**
7. **The discussion within the Supplementary Reference and FAQ are informative, not normative, and thus do not belong as part of the standard.**

a) The SDT decided to eliminate the FAQ document and incorporate the FAQ's contents into the Supplementary Reference Document as appropriate. The SDT considered your comments during this activity.
b) The SDT decided to eliminate the FAQ document and incorporate the FAQ's contents into the Supplementary Reference Document as appropriate. The SDT considered your comments during this activity.
c) The SDT decided to eliminate the FAQ document and incorporate the FAQ's contents into the Supplementary Reference

Voter	Entity	Segment	Vote	Comment
Document as appropriate. The SDT considered your comments during this activity. **8. A) The SDT has determined that the fundamental concerns of Requirement R1, Part 1.5 and the associated changes are addressed within the PSMP definition, and that Requirement R1, Part 1.5 is not necessary; therefore, it has been removed. Requirement R4 has also been re-drafted to address various related concerns noted within comments. The associated VSL has also been revised. Please see Supplementary Reference Document, Section 8 for a discussion of this.** **B) The term, "condition-based" has been removed from the draft standard. The other terms are used, but are clear in the context in which they are used.** **C) "Protective relay" is defined by IEEE, and the SDT sees no need to either change the definition or to repeat the definition with PRC-005. Further, the applicability of generically-described protective relays is defined by the Applicability clause of PRC-005-2.**				
Jason Shaver	American Transmission Company, LLC	1	Negative	ATC recognizes the substantial efforts that the SDT has made on PRC-005 and appreciate the SDT's modifications to this Standard based on previous comments made. ATC looks forward to continuing to have a positive influence on this process via the comment process, ballots and interaction with the SDT. ATC was very close to an affirmative vote on this Standard prior to the unanticipated changes that appeared in this most recent posting. These changes introduce a significant negative impact from ATC's perspective. Therefore, ATC is recommending a negative ballot in the hope that our concerns regarding R 1.5 and R 4.2 and other clarifications will be included with the standard.
1. Response: Thank you for your comments. The SDT has determined that the fundamental concerns of Requirement R1, Part 1.5 and the associated changes are addressed within the PSMP definition, and that Requirement R1, Part 1.5 is not necessary; therefore, it has been removed. Requirement R4 has also been re-drafted to address various related concerns noted within comments. The associated VSL has also been revised. Please see Supplementary Reference Document, Section 8 for a discussion of this.				
John Bussman	Associated Electric Cooperative, Inc.	1	Negative	AECI want to thanks the team for the efforts being put forth by the drafting team. The table is much easier to follow and less confusing. AECI is voting negative because of the battery inspection intervals. 1. We have commented before about the 3 months being excessive and think it should be annually. However, with that being stated if you are going to use three months as the interval then that means inspections will have to be scheduled every 2 months to ensure the inspections happen every 3 months. Therefore AECI request that the battery inspection schedule be extended to every 4 months and then entities can schedule inspections to be performed every 3 months to ensure that the inspections are completed every 4 months.

Voter	Entity	Segment	Vote	Comment
				2. The same comment applies the the unmonitored communication circuits. Change the time interval to 4 months. Then scheduling can be every 3 months instead of every 2 months. 3. When you go to Table 1-4 there is confusion with the the DC for a UFLS or UVLS system. For the interval it states "When control circuits are verified" Then I go to Table 1-5 the second line that discusses trip coils for UFLS and UVLS the interval states "No periodic maintenance specified" Is this what was intended?
Response: **Thank you for your comments.** **1. The SDT believes that the 3-month interval is proper.** **2. The SDT believes that the 3-month interval is proper for unmonitored communications systems.** **3. The SDT intends that tripping of the interrupting device for UFLS/UVLS is not required, but that the other portions of the dc control circuitry still shall be maintained. See Section 15.3 of the Supplementary Reference Document**				
Joseph S. Stonecipher	Beaches Energy Services	1	Negative	1. UFLS and UVLS maintenance and testing is greatly expanded, e.g., we interpreted PRC-008/011 as being only the UFLS/UVLS equipment. The new PRC-005 sweeps in other protection system components, e.g., communications (probably not applicable), voltage and current sensing devices (e.g., instrument transformers), Station DC supply, control circuitry. What we see as a problem is that these components are all part of distribution system protection, so, these activities would not be covered by other BES protection system maintenance and testing. I'm sure we are testing batteries and the like, but, in many cases distribution circuits are such that it is very difficult, if not impossible, to test control circuitry to the trip coil of the breaker without causing an outage of the customers on that distribution circuit. There is no real reliability need for this either. Unlike Transmission and Generation Protection Systems which are needed to clear a fault and may only have one or two back-up systems, there are thousands and thousands of UFLS relays and if one fails to operate, it will not be noticeable to the event. It does make sense to test the relays themselves, in part, to ensure that the regionsl UFLS program is being met; but, to test the other protection system components is not worthwhile. Note that DC Supplies and most of the control circuitry of distribution line breakers are "tested" frequently by distribution circuits clearing faults such as animals, vegetation blow-ins, lightning, etc., on distribution circuits, reducing the value of testing to just about nill. However, this version is better than prior versions because it essentially requires the entity to determine it's own period of maintenance and testing for UFLS/UVLS for DC Supply and control circuitry. 2. Applicability, 4.2.1, should reflect the Y&W and Tri-State interpretation (Project 2009-17) of "transmission Protection System" and should state: "Protection Systems applied on, or designed to provide protection for a BES Facility and that

Voter	Entity	Segment	Vote	Comment
				trips a BES Facility." 3. Applicability, 4.2. - does not reflect the interpretation of Project 2009-10 that excludes non-electrical protection (e.g., sudden pressure relays) and auxiliary relays. Because the definition of Protection System (recently approved) does not clearly exclude "non-electrical" protection,the Applicability section should. For instance,, a vibration monitor, steam pressure, etc. protection of generators, sudden pressure protection of transformers, etc. should not be included in the standard. An alternative is to change the definition of Protection System to make sure it only includes electrical.
Response: **Thank you for your comments.** **1. For UFLS and UVLS, the maintenance activities related to station dc supply and control circuitry are somewhat constrained relative to similar activities for Protection Systems in general. Regardless, without proper functioning of these component types, UFLS and UVLS will not respond as expected, and will therefore degrade BES system reliability, particularly during the stressed system conditions for which UFLS and UVLS are installed. Relative to control circuitry, Table 1-5 specifically excludes UFLS and UVLS from maintenance activities related to the interrupting device trip coil.** **2. This interpretation is not yet approved by FERC. When this interpretation is approved, the SDT will incorporate it within PRC-005-2. However, the SDT has made changes to Applicability 4.2.1. in consideration of your comment.** **3. The recently-balloted revision of the definition of Protection System, which has been approved by the NERC Board of Trustees and will soon be filed with FERC for approval, clearly includes only protective relays that respond to electrical quantities. As for auxiliary relays, the interpretation to which you refer states that they are not explicitly included, but are included to the degree that an entity's Protection System control circuitry addresses them(which has been identified as a reliability gap), and are being added to PRC-005-2 to resolve the gap.**				
Donald S. Watkins	Bonneville Power Administration	1	Negative	Please see BPA's formal comments submitted on 12/16/10. Our concerns have not been adequately addressed.
Response: **Thank you for your comments. Please see our responses to your comments from the formal comment period.**				
Paul Rocha	CenterPoint Energy	1	Negative	1) CenterPoint Energy cannot support this proposed Standard. Any standard that requires a 35 page Supplementary Reference document and a 37 page FAQ - Practical Compliance and Implementation document is much too prescriptive and complex. 2) CenterPoint Energy is very concerned that a large increase in the amount of documentation will be required in order to demonstrate compliance - with no resulting reliability benefit. CenterPoint Energy believes this Standard could actually result in decreasing system reliability, as the Standard proposes excessive maintenance requirements. The following is included in the

Voter	Entity	Segment	Vote	Comment
				Supplementary Reference document (page 8): "Excessive maintenance can actually decrease the reliability of the component or system. It is not unusual to cause failure of a component by removing it from service and restoring it." System reliability can be even further reduced by the number of transmission line and autotransformer outages required to perform maintenance. 3) In addition, the following is included in the FAQ - Practical Compliance and Implementation document: "PRC-005-2 assumes that thorough commission testing was performed prior to a protection system being placed in service. PRC-005-2 requires performance of maintenance activities that are deemed necessary to detect and correct plausible age and service related degradation of components such that a properly built and commission tested Protection System will continue to function as designed over its service life." CenterPoint Energy believes some proposed requirements, such as wire checking a relay panel, do not conform to this statement. CenterPoint Energy's experience has been that panel wiring does not degrade with age and service and that problems with panel wiring, after thorough commissioning, is not a systemic issue.
Response: **Thank you for your comments.** **1. The SDT decided to eliminate the FAQ document and incorporate the FAQ's contents into the Supplementary Reference Document as appropriate.** **2. FERC Order 693 directed that NERC establish maximum maintenance intervals. The documentation required should not expand dramatically from the documentation currently required to demonstrate compliance. An entity may minimize hands-on maintenance by utilizing monitoring to extend the intervals.** **3. The standard does not require "wire-checking," but instead generically specifies "verification" – however an entity chooses to do so.**				
Jack Stamper	Clark Public Utilities	1	Negative	My no vote reflects my concern regarding the testing of Station DC Supply (Table 1-4) and Alarming Paths (Table 2). The SDT has provided much clarity to this standard in the testing requirements for relays, communication systems, voltage and current sensing devices, and control circuitry. 1. Table 1-4 is still confusing. There are five separate categories of unmonitored Station DC Supply testing requirements. It is unclear whether these categories are to be combined or if they are mutually exclusive. The first category applies to "Any unmonitored station dc supply not having the monitoring attributes of a category below" and appears to be a set of inspection and verification

Voter	Entity	Segment	Vote	Comment
				requirements that are generally applicable to all unmonitored Station DC Supplies. The next four categories are applicable to Station DC Supply with specified types of batteries. If a station has unmonitored vented lead-acid batteries, are the batteries ONLY subject to the testing requirements for VLA batteries? OR would these batteries ALSO be subject to the requirements of the first category? It appears that the intent is for all Station DC Supply not having any monitoring attributes to be tested and maintained in accordance with the first category as well as the second through fifth category that is applicable. If this is the case, the SDT should consider revising the Component Attributes in Table 1-4 for the first category of Unmonitored Station DC Supplies to the following: Any unmonitored station dc supply not having the monitoring attributes of a category below. (excluding UFLS and UVLS). Station DC Supply devices applicable under these Table 1-4 general requirements will have additional testing requirements as described below for non-battery systems, VRLA battery systems, VLA battery systems, and Ni-Cad battery systems. 2. Do monitored batteries need to have all of the monitoring attributes listed or does having some of the monitoring attributes qualify a device as "Monitored?" The frequently asked questions examples on pages 30 - 32 seem to indicate that if only some of the items are monitored, the Station DC Supply is considered “Monitored” as long as other items are tested or verified. If this is the case, the SDT should consider revising the Component Attributes in Table 1-4 for the first category of Monitored Station DC Supplies to the following: Monitored Station dc supply (excluding UFLS and UVLS) with: Monitor and alarm for variations from defined levels (See Table 2): o Station dc supply voltage (voltage of battery charger) o State of charge of the individual battery cell/units o Battery continuity of station battery o Cell-to-cell (if available) and battery terminal resistance. Monitored Station dc supply will have one or more of the above listed conditions monitored or alarmed with the remainder of the conditions subject to inspection and verification activities. 3. In Table 2, the first Component Attribute for Alarm Paths contains the requirement that “Alarms are automatically reported within 24 hours of DETECTION to a location where corrective action can be taken.” I believe the term “automatically” should be removed. This term implies an automated process without human intervention. However, many facilities (i.e. generator

Voter	Entity	Segment	Vote	Comment
				protection devices or manned substations) have protective devices that while not being subject to continuous monitoring, are visually inspected in daily or twice daily inspections. If protection devices have internal self-diagnostics that provide an alarm (i.e. failure indication on faceplate, relay interrogation, or LED failure indicator) and these devices are inspected one or more times per day, failures or malfunctions would be reported within the 24 hour DETECTION time. This appears to be within the intent of the standard which is to make sure that failed protective devices do not remain in failure longer than 24 hours without notification to a location where corrective action can be taken.
Response: **Thank you for your comments.** **1. Table 1-4 has been modified in consideration of your comments.** **2. Table 1-4 has been modified in consideration of your comments, and has been revised to remove "state of charge".** **3. "Automatically" has been removed from Table 2 in consideration of your comment.**				
Danny McDaniel	Cleco Power LLC	1	Negative	Cleco applies its' UFLS on the distribution grid with each UF relay individually tripping a relatively low value of load thru breakers and reclosers. Since our program is implemented via a large number of individual components, breakers, reclosers, and individual batteries, the failure of any one component will have a minimal impact on the effectiveness of the overall UFLS program within our region. Therefore, the verification of sensing devices, dc supply voltages, and the paths of the control circuit and trip circuits on the UFLS systems implemented on the distribution grid is unnecessary.
Response: **Thank you for your comments. The SDT disagrees; the sensing devices, control circuitry and dc supply related to UFLS has an effect on the performance of the UFLS. The SDT has, however, respected the overall impact on the control circuitry of individual UFLS on BES reliability by requiring that UFLS be subjected to a subset of the overall sensing devices, control circuitry and dc supply maintenance activities.**				
Paul Morland	Colorado Springs Utilities	1	Negative	CSU offers the following comments: 1. The document refers to the "BES" or "Bulk Electrical System" yet we have been unable to get a clear definition as to what that is. 2. 1.5 Because some calibration tolerances, such as communications schemes, change with the weather conditions, establishing tolerances could be difficult if the weather conditions are not factored into the tables. 3. 4.2.5.4 There needs to be a clear definition for "Station Service Transformers". 4. The reference to testing tolerances implies that test equipment must be calibrated to some standard, which this document does not discuss, and leaves a very wide interpretation for what this standard is, or the required calibration is required. 5. Table 1-3 Voltage and current devices may be connected to a meter and compared to a reference source to verify proper operation of the CT or PT. This seems to be at error in thinking that only microprocessor relays can be

Voter	Entity	Segment	Vote	Comment
				used to verify CT or PT's. Also in many PT's there is more than one winding and tap, or which this standard seems to imply that only one needs to be monitored to verify the correct function of all of the windings and taps. If I were to follow this logic, I only need to monitor one winding of a dual core CT.
Response: **Thank you for your comments.** **1. Bulk Electric System is defined by NERC, and further defined by the Regional Entities. Please refer to these definitions.** **2. The SDT has determined that the fundamental concerns of Requirement R1, Part 1.5 and the associated changes are addressed within the PSMP definition, and that Requirement R1, Part 1.5 is not necessary; therefore, it has been removed. Requirement R4 has also been re-drafted to address various related concerns noted within comments. The associated VSL has also been revised. Please see Supplementary Reference Document, Section 8 for a discussion of this.** **3. Station Service transformer provide power to the auxiliary busses of generating plants. Some alternative names for these devices are "unit auxiliary transformers", "station auxiliary transformers", The SDT believes that these devices are commonly understood throughout industry and therefore require no definition.** **4. The SDT has determined that the fundamental concerns of Requirement R1, Part 1.5 and the associated changes are addressed within the PSMP definition, and that Requirement R1, Part 1.5 is not necessary; therefore, it has been removed. Requirement R4 has also been re-drafted to address various related concerns noted within comments. The associated VSL has also been revised. Please see Supplementary Reference Document, Section 8 for a discussion of this.** **5. Table 1-3 does not prescribe how the voltage and current sensing device inputs to the protective relays shall be verified, just that they be verified according to the established intervals. Please see Section 15.2 of the Supplementary Reference Document for a discussion on this topic.**				
Christopher L de Graffenried	Consolidated Edison Co. of New York	1	Negative	PRC-005 Initial Ballot Comments: 1. The Tables - The wording "Component Type" is not necessary in each title. Just the equipment category should be listed--what is now shown as "Component Type - Protective Relay", should be Protective Relay. However, Protective Relay is too general a category. Electromechanical relays, solid state relays, and microprocessor based relays should have their own separate tables. So instead of reading Protective Relay in the title, it should read Electromechanical Relays, etc. This will lengthen the standard, but will simplify reading and referring to the tables, and eliminate confusion when looking for information. The "Note" included in the heading is also not necessary. "Attributes" is also not necessary in the column heading, "Component" suffices. 2. Other Comments - In general, the standard is overly prescriptive and complex. It should not be necessary for a standard at this level to be as detailed and complex as this standard is. Entities working with manufacturers, and knowledge gained from experience can develop adequate maintenance and testing programs. 3. Why are "Relays that respond to non-electrical inputs or impulses (such

Voter	Entity	Segment	Vote	Comment
				as, but not limited to, vibration, pressure, seismic, thermal or gas accumulation)…" not included? The output contacts from these devices are oftentimes connected in tripping or control circuits to isolate problem equipment. 4. Due to the critical nature of the trip coil, it must be maintained more frequently if it is not monitored. Trip coils are also considered in the standard as being part of the control circuitry. Table 1-5 has a row labeled "Unmonitored Control circuitry associated with protective functions", which would include trip coils, has a "Maximum Maintenance Interval" of "12 Calendar Years". Any control circuit could fail at any time, but an unmonitored control circuit could fail, and remain undetected for years with the times specified in the Table (it might only be 6 years if I understand that as being the trip test interval specified in the table). Regardless, if a breaker is unable to trip because of control circuit failure, then the system must be operated in real time assuming that that breaker will not trip for a fault or an event, and backup facilities would be called upon to operate. Thus, for a line fault with a "stuck" breaker (a breaker unable to trip), instead of one line tripping, you might have many more lines deloaded or tripped because of a bus having to be cleared because of a breaker failure initiation. The bulk electric system would have to be operated to handle this contingency. 5. In reference to the FAQ document, Section 5 on Station dc Supply, Question K, clarification is needed with respect to dc supplies for communication within the substation. For example, if the communication systems were run off a separate battery in separate area in a substation, would the standard apply to these batteries or not? 6. To define terms only as they are used in PRC-005-2 is inviting confusion. Although they may be unique to PRC-005-2, some or all of them may be used in future standards, some already may be used in existing standards, and may or may not be deliberately defined. Consistency must be maintained, not only for administrative purposes, but for effective technical communications as well. 7. What is the definition of "Maintenance" as used in the table column "Maximum Maintenance Interval"? Maintenance can range from cleaning a relay cover to a full calibration of a relay. 8. A control circuit is not a component, it is made up of components. 9. Sub-requirement 1.5 needs to be clarified. It is not clear what "Identify calibration tolerances or other equivalent parameters…" means, and may be subject to different interpretations by entities and compliance

Voter	Entity	Segment	Vote	Comment
				enforcement personnel. 10. In the Implementation plan for Requirement R1, recommend changing "six" to fifteen. This change would restore the 3-month time difference that existed in the previous draft, between the durations of the implementation periods for jurisdictions that do and do not require regulatory approval. It will ensure equity for those entities located in jurisdictions that do not require regulatory approval, as is the case in Ontario. 11. The 'box' for "Monitored Station dc supply..." in Table 1-4 is not clear. It seems to continue to the next page to a new box. There are multiple activities without clear delineation. 12. Regarding station service transformers, Item 4.2.5.5 under Applicability should be deleted. The purpose of this standard is to protect the BES by clearing generator, generator bus faults (or other electrical anomalies associated with the generator) from the BES. Having this standard apply to generator station service transformers, that have no direct connection to the BES, does meet this criteria. The FAQs (III.2.A) discuss how the loss of a station service transformer could cause the loss of a generating unit, but this is not the purpose of PRC-005. Using this logic than any system or device in the power plant that could cause a loss of generation should also be included. This is beyond the scope of the NERC standards.

Response: **Thank you for your comments.**

1. The SDT believes that the table headings are appropriate as reflected in the draft standard.

2. The intervals and activities specified are believed by the SDT to be technically effective, in a fashion that may be consistently monitored for compliance. Further, FERC Order 693 directs NERC to establish maximum allowable intervals, which implies that minimum activities also need to be prescribed. If an entities' experience is that components require less-frequent maintenance, a performance-based program in accordance with Requirement R3 and Attachment A is an option.

3. The SDT concentrated their efforts on protective relays which use the entire group of component types within the Protection System definition. Also, there is currently no technical basis for the maintenance of the devices which respond to non-electrical quantities on which to base mandatory standards related either to activities or intervals. Absent such a technical basis, we are currently unable to establish mandatory requirements, but may do so in the future if such a technical basis becomes available.

4. According to Table 1-5, trip coils of interrupting devices must be verified to operate every 6 years, rather than the 12-year interval. You can maintain these devices more frequently if you desire.

5. With respect to dc supply associated only with communication systems, we prescribe, within Table 1-2, that the communications system must be verified as functional every 3 months, unless the functionality is verified by monitoring. The specific station dc supply requirements (Table 1-4) do not apply to the dc supply associated only with communications systems. The SDT decided to

Voter	Entity	Segment	Vote	Comment
eliminate the FAQ document and incorporate the FAQ's contents into the Supplementary Reference Document as appropriate. The SDT considered your comments during this activity. **6. The SDT has proposed these terms for use only within PRC-005-2 because we are concerned that other uses of these terms, either now or in the future, may not be consistent with the terms used here. They are defined only for clarify within this standard. The SDT will confirm with NERC staff that this approach is acceptable.** **7. As used in the "Maximum Maintenance Interval" column title of the table, maintenance refers to whatever activities are specified in the Activities column. The term is capitalized in the column title in conformance with normal editorial practice as a title, rather than as a definition.** **8. For purposes of this standard, the control circuit IS defined as one component type..** **9. The SDT has determined that the fundamental concerns of Requirement R1, Part 1.5 and the associated changes are addressed within the PSMP definition, and that Requirement R1, Part 1.5 is not necessary; therefore, it has been removed. Requirement R4 has also been re-drafted to address various related concerns noted within comments. The associated VSL has also been revised. Please see Supplementary Reference Document, Section 8 for a discussion of this.** **10. In consideration of your comment, "six" has been modified to "twelve" in the Implementation Plan for Requirement R1, making it consistent with the remainder of the Implementation Plan.** **11. Table 1-4 has been further modified for clarity.** **12. In response to many comments, including yours, the SDT has removed 4.2.5.5 from the Applicability of the standard.**				
Robert W. Roddy	Dairyland Power Coop.	1	Negative	In Table 1-5 it is unclear which devices the Maximum Maintenance Intervals would be held to, such as trip coils of circuit breakers and coils of electromechanical trip or auxiliary relays whose continuity and energization are monitored and alarmed.
Response: **Thank you for your comments. Trip coils of circuit breakers have a 6-year interval for physical operation. Coils of lockout and auxiliary relays also have a 6-year interval for physical operation. Control circuitry whose continuity and energization or ability to operate are monitored and alarmed require no hands-on maintenance.**				
John K Loftis	Dominion Virginia Power	1	Negative	Dominion is opposed to this version because Requirement R1.5 is overly prescriptive, requiring an extraordinary level of documentation, with little anticipated improvement in reliability.
Response: **Thank you for your comments. The SDT has determined that the fundamental concerns of Requirement R1, Part 1.5 and the associated changes are addressed within the PSMP definition, and that Requirement R1, Part 1.5 is not necessary; therefore, it has been removed. Requirement R4 has also been re-drafted to address various related concerns noted within comments. The associated VSL has also been revised. Please see Supplementary Reference Document, Section 8 for a discussion of this.**				

Voter	Entity	Segment	Vote	Comment
George R. Bartlett	Entergy Corporation	1	Negative	The restructured tables are generally much clearer and the SDT is to be commended on their efforts. 1. However, we believe the Alarming Point Table needs additional clarification with regard to the Maximum Maintenance Interval. If an "alarm producing device" is considered to be a device such as an SCADA RTU, individual entity intervals for such a device would differ, and there isn't necessarily a maximum interval established as there is for Protection System components. Also, if an entity's alarm producing device maintenance is performed in sections and triggered by segment or component maintenance, there would essentially be multiple maximum intervals for the alarm producing device of that entity. On that basis, we suggest the interval verbiage be revised to "When alarm producing device or system is verified, or by sections as per the monitored component/protection system specified maximum interval as applicable". Alternately, if the intention is to establish maximum intervals as simply being no longer than the individual component maintenance intervals as we suggest for inclusion above, then the verbiage should be revised to "When alarm producing component/protection system segment is verified". In either case, are we to interpret monitored components with attributes which allow for no periodic maintenance specified as not requiring periodic alarm verification? 2. R1.5 calls for "identification of calibration tolerances or equivalent parameters..." whereas the associated VSL references "failure to establish calibration criteria...." and is listed as high. If R1.5 is to be included in this standard, then we suggest the severity level of a failure to simply "identify" or document such calibration tolerances would be analogous to the severity level(s) of a "failure to specify one" or the severity level should be consistent with the other elements of R1. Both cases appear to be more of a documentation issue as opposed to a failure to implement. Shouldn't a failure to implement any necessary calibration tolerance be accounted for in R4? R1.5 calls for "identification of calibration tolerances or equivalent parameters for each Protection System Component Type....". We believe the Supplementary Reference document should provide additional information and examples of calibration tolerances or equivalent parameters which would be expected for the various component types. Especially for any "equivalent" parameters which would be required for compliance for a component type besides protective relays. Adding Requirement 1.5 is a significant revision and raises questions as to how broadly an accuracy or equivalent parameter requirement and associated

Voter	Entity	Segment	Vote	Comment
				documentation would need to be addressed by entities and/or will be measured for compliance. Discussion on this new requirement does not seem to be addressed anywhere in the FAQ or Supplementary Reference documents. Additionally, to the best of our knowledge, the need for such a requirement was not brought up as a concern or comment on the prior draft version of this standard, and in the context of a requirement need, we don't believe it has been attributed to or actually poses any significant reliability risk. We do not believe this requirement is justified.
Response: **Thank you for your comments.** **1. The Maximum Maintenance Interval column entry in Table 2 has been revised to state, "When alarm producing Protection System component is verified" to clarify this.** **2. The SDT has determined that the fundamental concerns of Requirement R1, Part 1.5 and the associated changes are addressed within the PSMP definition, and that Requirement R1, Part 1.5 is not necessary; therefore, it has been removed. Requirement R4 has also been re-drafted to address various related concerns noted within comments. The associated VSL has also been revised. Please see Supplementary Reference Document, Section 8 for a discussion of this.**				
Robert Martinko	FirstEnergy Energy Delivery	1	Negative	Please see FirstEnergy's comments submitted separately through the comment period posting.
Response: **Thank you for your comments.** **Please see our responses to your comments from the formal comment period.**				
Gordon Pietsch	Great River Energy	1	Negative	1. We believe that requiring an entity to identify calibration tolerances in their PSMP does not add a material benefit and does not contribute to increased reliability. In addition we believe that R1.5 should be rewritten to state that a Relay test report should show when a Relay fell out of tolerance. R4.2 should be rewritten to state that if a test report does show that a Relay was out of tolerance it should be required to show that resolution was initiated. 2. The Activities section of Table 1.3 should be revised to include that the signals do not have to come from energized voltage or current sensing devices. The current or voltage signals can come from a test set. Note: It may be difficult to energize CTs or VTs for large capacitor banks, reactors, or generating units.
Response: **Thank you for your comments.** **1. The SDT has determined that the fundamental concerns of Requirement R1, Part 1.5 and the associated changes are addressed within the PSMP definition, and that Requirement R1, Part 1.5 is not necessary; therefore, it has been removed. Requirement R4 has also been re-drafted to address various related concerns noted within comments. The associated VSL has also been revised. Please see Supplementary Reference Document, Section 8 for a discussion of this.**				

Voter	Entity	Segment	Vote	Comment
2. Table 1-3 has been modified in consideration of your comments.				
Ajay Garg	Hydro One Networks, Inc.	1	Negative	Hydro One is casting a negative vote with the following comments: 1. The added requirement R1, Part 1.5 is vague and needs clarification. It is not clear what "Identify calibration tolerances or other equivalent parameters" means and as written will be subject to different interpretations by entities and compliance enforcement personnel. The addition of this new part of Requirement R1 that requires the Owners to "identify calibration tolerances or other equivalent parameters for each Protection System component type" is onerous and contributes little to the reliability of the BES. 2. Changes introduced to the Implementation Plan since the last posting are not consistent with respect to jurisdictions where no regulatory approval is required. The previously posted implementation for Requirement R1 required entities to be 100% compliant on the first day of the first calendar quarter three months following applicable regulatory approvals, or in those jurisdictions where no regulatory approval is required, on the first day of the first calendar quarter six months following Board of Trustees adoption. The amended implementation plan changed the three-month time to twelve months in jurisdictions with regulatory approval required but left the same six-month time for the others. For consistency, the six months timeframe should be changed to fifteen months.
Response: **Thank you for your comments.** **1. The SDT has determined that the fundamental concerns of Requirement R1, Part 1.5 and the associated changes are addressed within the PSMP definition, and that Requirement R1, Part 1.5 is not necessary; therefore, it has been removed. Requirement R4 has also been re-drafted to address various related concerns noted within comments. The associated VSL has also been revised. Please see Supplementary Reference Document, Section 8 for a discussion of this.** **2. In consideration of your comment, "six" has been modified to "twelve" in the Implementation Plan for Requirement R1, making it consistent with the remainder of the Implementation Plan.**				
Michael Moltane	International Transmission Company Holdings Corp	1	Negative	1. ITC votes "Negative" for the following reasons: Our negative ballot is based on our objection to the 6 year test interval for auxiliary relays. We believe our present maintenance period for auxiliary relays of 10 years is adequate. 2. We also object to the requirement to verify acceptable levels of current values are received by the protective relays. We believe our present current transformer testing practice adequately insures acceptable levels of current are received by the relays and have requested that this procedure be approved. Detailed comments are included with our

Voter	Entity	Segment	Vote	Comment
				responses to the 5 questions in the Comment Form associated with this proposed Standard revision.
Response: **Thank you for your comments.** **1. The SDT believes that the appropriate interval for devices such as aux or lockout relays remains at 6 years, as these devices contain "moving parts" which must be periodically exercised to remain reliable.** **2. Please see our response in the Comment Form.**				
Stan T. Rzad	Keys Energy Services	1	Negative	1. UFLS and UVLS maintenance and testing is greatly expanded, e.g., we interpreted PRC-008/011 as being only the UFLS/UVLS equipment. The new PRC-005 sweeps in other protection system components, e.g., communications (probably not applicable), voltage and current sensing devices (e.g., instrument transformers), Station DC supply, control circuitry. What's key about this is that these components are all part of distribution system protection, so, these activities would not be covered by other BES protection system maintenance and testing. I'm sure we are testing batteries and the like, but, we are probably not testing battery chargers and control circuity, and, in many cases distribution circuits are such that it is very difficult, if not impossible, to test control circuitry to the trip coil of the breaker without causing an outage of the customers on that distribution circuit. There is no real reliability need for this either. Unlike Transmission and Generation Protection Systems which are needed to clear a fault and may only have one or two back-up systems, there are thousands and thousands of UFLS relays and if one fails to operate, it will not be noticeable to the event. It does make sense to test the relays themselves in part to ensure that the regio0nsl UFLS program is being met, but, to test the other protection system components is not worthwhile. Note that DC Supplies and most of the control circuitry of distribution lines are "tested" frequently by distribution circuits clearing faults such as animals, vegetation blow-ins, lightning, etc., on distribution circuits, reducing the value of testing to just about null. However, this version is better than prior versions because it essentially requires the entity to determine it's own period of maintenance and testing for UFLS/UVLS for DC Supply and control circuitry. 2. Applicability, 4.2.1, should reflect the Y&W and Tri-State interpretation (Project 2009-17) of "transmission Protection System" and should state: "Protection Systems applied on, or designed to provide protection for a BES Facility and that trips a BES Facility" 3. Applicability, 4.2. - does not reflect the interpretation of Project 20009-10

Voter	Entity	Segment	Vote	Comment
				that excludes non-electrical protection (e.g., sudden pressure relays) and auxiliary relays. Because the definition of Protection System (recently approved) does not clearly exclude "non-electrical" protection,the Applicability section should. For instance,, a vibration monitor, steam pressure, etc. protection of generators, sudden pressure protection of transformers, etc. should not be included in the standard. An alternative is to change the definition of Protection System to make sure it only includes electrical 4. The VRF of R1 should be Low since the attached tables are essentially the PSMP.
Response: **Thank you for your comments.** **1. For UFLS and UVLS, the maintenance activities related to station dc supply and control circuitry are somewhat constrained relative to similar activities for Protection Systems in general. Regardless, without proper functioning of these component types, UFLS and UVLS will not respond as expected, and will therefore degrade BES system reliability, particularly during the stressed system conditions for which UFLS and UVLS are installed. Relative to control circuitry, Table 1-5 specifically excludes UFLS and UVLS from maintenance activities related to the interrupting device trip coil.** **2. This interpretation is not yet approved by FERC. When this interpretation is approved, the SDT will incorporate it within PRC-005-2. However, the SDT has made changes to 4.2.1 in consideration of your comment.** **3. The recently-balloted revision of the definition of Protection System, which has been approved by the NERC Board of Trustees and will soon be filed with FERC for approval, clearly includes only protective relays that respond to electrical quantities. As for auxiliary relays, the interpretation to which you refer states that they are not explicitly included, but are included to the degree that an entity's Protection System control circuitry addresses them(which has been identified as a reliability gap), and are being added to PRC-005-2 to resolve the gap.** **4. The SDT disagrees; the Tables establish the intervals and activities, and Requirement R1 addresses the establishment of an entity's individual PSMP.**				
Walt Gill	Lake Worth Utilities	1	Negative	1. UFLS and UVLS maintenance and testing is greatly expanded, e.g., we interpreted PRC-008/011 as being only the UFLS/UVLS equipment. The new PRC-005 sweeps in other protection system components, e.g., communications (probably not applicable), voltage and current sensing devices (e.g., instrument transformers), Station DC supply, control circuitry. What's key about this is that these components are all part of distribution system protection, so, these activities would not be covered by other BES protection system maintenance and testing. I'm sure we are testing batteries and the like, but, we are probably not testing battery chargers and control circuity, and, in many cases distribution circuits are such that it is very difficult, if not impossible, to test control circuitry to the trip coil of the breaker without causing an outage of the customers on

Voter	Entity	Segment	Vote	Comment
				that distribution circuit. There is no real reliability need for this either. Unlike Transmission and Generation Protection Systems which are needed to clear a fault and may only have one or two back-up systems, there are thousands and thousands of UFLS relays and if one fails to operate, it will not be noticeable to the event. It does make sense to test the relays themselves in part to ensure that the regionsl UFLS program is being met, but, to test the other protection system components is not worthwhile. Note that DC Supplies and most of the control circuitry of distribution lines are "tested" frequently by distribution circuits clearing faults such as animals, vegetation blow-ins, lightning, etc., on distribution circuits, reducing the value of testing to just about null. However, this version is better than prior versions because it essentially requires the entity to determine it's own period of maintenance and testing for UFLS/UVLS for DC Supply and control circuitry. 2. Applicability, 4.2.1, should reflect the Y&W and Tri-State interpretation (Project 2009-17) of "transmission Protection System" and should state: "Protection Systems applied on, or designed to provide protection for a BES Facility and that trips a BES Facility" 3. Applicability, 4.2. - does not reflect the interpretation of Project 20009-10 that excludes non-electrical protection (e.g., sudden pressure relays) and auxiliary relays. Because the definition of Protection System (recently approved) does not clearly exclude "non-electrical" protection,the Applicability section should. For instance,, a vibration monitor, steam pressure, etc. protection of generators, sudden pressure protection of transformers, etc. should not be included in the standard. An alternative is to change the definition of Protection System to make sure it only includes electrical 4. The VRF of R1 should be Low since the attached tables are essentially the PSMP. 5. Table 1-4 requires a comparison of measured battery internal ohmic value to battery baseline. Since battery manufacturers do not provide this value, it is unclear what the “baseline” values ought to be if an entity recently began performing this test (assuming it’s several years after the commissioning of the battery.) Would it be acceptable for an entity to establish baseline values based on statistical analysis of multiple test results specific to a given battery manufacturer and design? o Small entities with only one or two BES substations may not have enough components to take advantage of the expanded maintenance intervals afforded by a performance-based maintenance program. Aggregating

Voter	Entity	Segment	Vote	Comment
				these components across different entities doesn't seem too logical considering the variations at the sub-component level (wire gauge, installation conditions, etc.) 6. Trip circuits are interconnected to perform various functions. Testing a trip path may involve disabling other features (i.e. breaker failure or reclosing) not directly a part of the test being performed. Temporary modifications made for testing introduce a chance to unknowingly leave functions disabled, contacts shorted, jumpers lifted, etc. after testing has been completed. Trip coils and cable runs from panels to breaker can be made to meet the requirements for monitored components. The only portions of the circuitry where this may not be the case is in the inter and intra-panel wiring. Because such portions of the circuitry have no moving parts and are located inside a control house, the exposure is negligible and should not be covered by the requirements. Entities will be at increased compliance risk as they struggle to properly document the testing of all parallel tripping paths.

Response: **Thank you for your comments.**

1. **For UFLS and UVLS, the maintenance activities related to station dc supply and control circuitry are somewhat constrained relative to similar activities for Protection Systems in general. Regardless, without proper functioning of these component types, UFLS and UVLS will not respond as expected, and will therefore degrade BES system reliability, particularly during the stressed system conditions for which UFLS and UVLS are installed. Relative to control circuitry, Table 1-5 specifically excludes UFLS and UVLS from maintenance activities related to the interrupting device trip coil.**
2. **This interpretation is not yet approved by FERC. When this interpretation is approved, the SDT will incorporate it within PRC-005-2. However, the SDT has made changes to Applicability 4.2.1 in consideration to your comment.**
3. **The recently-balloted revision of the definition of Protection System, which has been approved by the NERC Board of Trustees and will soon be filed with FERC for approval, clearly includes only protective relays that respond to electrical quantities. As for auxiliary relays, the interpretation to which you refer states that they are not explicitly included, but are included to the degree that an entity's Protection System control circuitry addresses them(which has been identified as a reliability gap), and are being added to PRC-005-2 to resolve the gap.**
4. **The SDT disagrees; the Tables establish the intervals and activities, and Requirement R1 addresses the establishment of an entity's individual PSMP.**
5. **Typical baseline values for various types of lead-acid batteries can be obtained from the test equipment manufacturer, perhaps the battery vendor, and perhaps other sources for batteries that are already in service. For new batteries, the initial battery baseline ohmic values should be measured upon installation and used for trending.**
6. **The requirement relative to control circuitry does not explicitly require trip or functional testing of the entire path; it requires that entities verify all paths without specifying the method of doing so. Please see Section 15.5 of the Supplementary Reference Document for detailed discussion.**

Voter	Entity	Segment	Vote	Comment
Larry E Watt	Lakeland Electric	1	Negative	The major reasons are that: 1. UFLS and UVLS maintenance and testing is greatly expanded, e.g., we interpreted PRC-008/011 as being only the UFLS/UVLS equipment. The new PRC-005 sweeps in other protection system components, e.g., communications (probably not applicable), voltage and current sensing devices (e.g., instrument transformers), Station DC supply, control circuitry. What's key about this is that these components are all part of distribution system protection, so, these activities would not be covered by other BES protection system maintenance and testing. I'm sure we are testing batteries and the like, but, we are probably not testing battery chargers and control circuity, and, in many cases distribution circuits are such that it is very difficult, if not impossible, to test control circuitry to the trip coil of the breaker without causing an outage of the customers on that distribution circuit. There is no real reliability need for this either. Unlike Transmission and Generation Protection Systems which are needed to clear a fault and may only have one or two back-up systems, there are thousands and thousands of UFLS relays and if one fails to operate, it will not be noticeable to the event. It does make sense to test the relays themselves in part to ensure that the regio0nsl UFLS program is being met, but, to test the other protection system components is not worthwhile. Note that DC Supplies and most of the control circuitry of distribution lines are "tested" frequently by distribution circuits clearing faults such as animals, vegetation blow-ins, lightning, etc., on distribution circuits, reducing the value of testing to just about null. However, this version is better than prior versions because it essentially requires the entity to determine it's own period of maintenance and testing for UFLS/UVLS for DC Supply and control circuitry. 2. Applicability, 4.2.1, should reflect the Y&W and Tri-State interpretation (Project 2009-17) of "transmission Protection System" and should state: "Protection Systems applied on, or designed to provide protection for a BES Facility and that trips a BES Facility" 3. Applicability, 4.2. - does not reflect the interpretation of Project 20009-10 that excludes non-electrical protection (e.g., sudden pressure relays) and auxiliary relays. Because the definition of Protection System (recently approved) does not clearly exclude "non-electrical" protection,the Applicability section should. For instance,, a vibration monitor, steam pressure, etc. protection of generators, sudden pressure protection of transformers, etc. should not be included in the standard. An alternative is to change the definition of Protection System to make sure it only includes

Voter	Entity	Segment	Vote	Comment
				electrical 4. the VRF of R1 should be Low since the attached tables are essentially the PSMP.
Response: **Thank you for your comments.** **1. For UFLS and UVLS, the maintenance activities related to station dc supply and control circuitry are somewhat constrained relative to similar activities for Protection Systems in general. Regardless, without proper functioning of these component types, UFLS and UVLS will not respond as expected, and will therefore degrade BES system reliability, particularly during the stressed system conditions for which UFLS and UVLS are installed. Relative to control circuitry, Table 1-5 specifically excludes UFLS and UVLS from maintenance activities related to the interrupting device trip coil.** **2. This interpretation is not yet approved by FERC. When this interpretation is approved, the SDT will incorporate it within PRC-005-2. However, the SDT has made changes to Applicability 4.2.1 in consideration of your comment.** **3. The recently-balloted revision of the definition of Protection System, which has been approved by the NERC Board of Trustees and will soon be filed with FERC for approval, clearly includes only protective relays that respond to electrical quantities. As for auxiliary relays, the interpretation to which you refer states that they are not explicitly included, but are included to the degree that an entity's Protection System control circuitry addresses them(which has been identified as a reliability gap), and are being added to PRC-005-2 to resolve the gap.** **4. The SDT disagrees; the Tables establish the intervals and activities, and Requirement R1 addresses the establishment of an entity's individual PSMP.**				
Joe D Petaski	Manitoba Hydro	1	Negative	1. Implementation Plan (Timeline) for R1: In areas not requiring regulatory approval, the 6 month time frame proposed for R1 is not achievable and is not consistent with areas requiring regulatory approval. To be consistent, the effective date for R1 in jurisdictions where no regulatory approval is required should be the first day of the first calendar quarter 12 months after BOT approval. 2. VSLs: The high VSL for R1 "Failed to include all maintenance activities relevant for the identified monitoring attributes specified in Tables 1-1 through 1-5" may be interpreted in different ways and should be further clarified. 3. Table 1-4: The requirements for batteries listed in Table 1-4 do not appear to be consistent with the comments in the FAQ Section (V 1A Example 1). Please see comments submitted during formal comment period for further detail. 4. Table 1-4: The requirement for a 3 month check on electrolyte level seems too frequent based on our experience. We would like to point out that although IEEE std 450 (which seems to be the basis for table 1-4) does recommend intervals it also states that users should evaluate these recommendations against their own operating experience.

Voter	Entity	Segment	Vote	Comment
Response: **Thank you for your comments.** **1. In consideration of your comment, "six" has been modified to "twelve" in the Implementation Plan for Requirement R1, making it consistent with the remainder of the Implementation Plan.** **2. The SDT does not understand your concern; further details are needed.** **3. The SDT decided to eliminate the FAQ document and incorporate the FAQ's contents into the Supplementary Reference Document as appropriate. The SDT considered your comments during this activity.** **4. The SDT believes that the 3-month interval specified in the Standard is appropriate.**				
Terry Harbour	MidAmerican Energy Co.	1	Negative	MidAmerican remains concerned that including requirements for testing of electromechanical trip or auxiliary devices (Table 1-5 Row 3) will in some cases require entire bus outages that will compromise the BES reliability due to the need for entities across the US to take multiple BES elements out of service during the testing. If this requirement is retained additional time should be included in the implementation plan to allow for system modifications, such as the installation of relay test switches, to potentially allow for this testing while minimizing testing outages.
Response: **Thank you for your comments. The SDT has determined that the fundamental concerns of Requirement R1, Part 1.5 and the associated changes are addressed within the PSMP definition, and that Requirement R1, Part 1.5 is not necessary; therefore, it has been removed. Requirement R4 has also been re-drafted to address various related concerns noted within comments. The associated VSL has also been revised. Please see Supplementary Reference Document, Section 8 for a discussion of this.**				
Saurabh Saksena	National Grid	1	Negative	National Grid believes that this new Requirement as written subjects the Transmission Owner, Generation Owner or Distribution Provider to vague interpretations of what the requirement means by compliance officials. The addition of the new part of Requirement R1 that requires the Owners to "identify calibration tolerances or other equivalent parameters for each Protection System component type" is too intrusive and divisive for what it brings to the reliability of the BES.
Response: **Thank you for your comments. The SDT has determined that the fundamental concerns of Requirement R1, Part 1.5 and the associated changes are addressed within the PSMP definition, and that Requirement R1, Part 1.5 is not necessary; therefore, it has been removed. Requirement R4 has also been re-drafted to address various related concerns noted within comments. The associated VSL has also been revised. Please see Supplementary Reference Document, Section 8 for a discussion of this.**				
Richard L. Koch	Nebraska Public Power District	1	Negative	1. The PSMP definition inappropriately extends the maintenance program to include corrective maintenance. The first bullet of the Detailed Description section of the SAR specifically states: "Analysis of correct operations or misoperations may be an integral part of condition-based maintenance processes, but need not be mandated in a maintenance standard." The comment in the SAR was directed toward the Purpose of PRC-017 since it is the only one of the applicable PRC standards that included corrective measures in its Purpose. However, the concept of not including corrective maintenance in a maintenance standard should apply to all of the

Voter	Entity	Segment	Vote	Comment
				applicable PRC standards. The same statement from the SAR identified above was also included in the NERC SPCTF Assessment of Standards referenced in the SAR. Neither the SAR nor the NERC SPCTF Assessment of the Standards identified the need to expand the maintenance and testing program to include corrective maintenance. I recommend deleting the words "and proper operation of malfunctioning components is restored." from the first sentence of the PSMP definition. I believe that failure to do so exceeds the scope of the SAR. 2. Applicability Part 4.2.2: The ERO does not establish underfrequency load-shedding requirements. Those requirements will be established by Reliability Standard PRC-006-1 when it is approved by FERC. I recommend changing Accountability Part 4.2.2. to "...installed to provide last resort system preservation measures." (Note this wording is consistent with the Purpose of PRC-006-0.) 3. Applicability Part 4.2.5.4 and 4.2.5.5: Station Service transformers provide energy to plant loads and not the BES. If these plant transformers are included, why not include the rest of the plant systems? I recommend deleting Applicability Part 4.2.5.4 and 4.2.5.5. 4. Requirement R4: The PSMP definition inappropriately extends the maintenance program to include corrective maintenance. The first bullet of the Detailed Description section of the SAR specifically states: "Analysis of correct operations or misoperations may be an integral part of condition-based maintenance processes, but need not be mandated in a maintenance standard." The comment in the SAR was directed toward the Purpose of PRC-017 since it is the only one of the applicable PRC standards that included corrective measures in its Purpose. However, the concept of not including corrective maintenance in a maintenance standard should apply to all of the applicable PRC standards. The same statement from the SAR identified above was also included in the NERC SPCTF Assessment of Standards referenced in the SAR. Neither the SAR nor the NERC SPCTF Assessment of the Standards identified the need to expand the maintenance and testing program to include corrective maintenance. I recommend deleting the words "including identification of the resolution of all maintenance correctable issues" from the first sentence of the Requirement. I believe that failure to do so exceeds the scope of the SAR. 5. Requirement R4 Part 4.2: The PSMP definition inappropriately extends the maintenance program to include corrective maintenance. The first bullet of the Detailed Description section of the SAR specifically states: "Analysis

Voter	Entity	Segment	Vote	Comment
				of correct operations or misoperations may be an integral part of condition-based maintenance processes, but need not be mandated in a maintenance standard." The comment in the SAR was directed toward the Purpose of PRC-017 since it is the only one of the applicable PRC standards that included corrective measures in its Purpose. However, the concept of not including corrective maintenance in a maintenance standard should apply to all of the applicable PRC standards. The same statement from the SAR identified above was also included in the NERC SPCTF Assessment of Standards referenced in the SAR. Neither the SAR nor the NERC SPCTF Assessment of the Standards identified the need to expand the maintenance and testing program to include corrective maintenance. I recommend re-wording Requirement 4, Part 4.2 to state: "Verify that the components are within the acceptable parameters established in accordance with Requirement R1, Part 1.5 at the conclusion of the maintenance activities." I believe that failure to do so exceeds the scope of the SAR. 6. Measurement M4: The PSMP definition inappropriately extends the maintenance program to include corrective maintenance. The first bullet of the Detailed Description section of the SAR specifically states: "Analysis of correct operations or misoperations may be an integral part of condition-based maintenance processes, but need not be mandated in a maintenance standard." The comment in the SAR was directed toward the Purpose of PRC-017 since it is the only one of the applicable PRC standards that included corrective measures in its Purpose. However, the concept of not including corrective maintenance in a maintenance standard should apply to all of the applicable PRC standards. The same statement from the SAR identified above was also included in the NERC SPCTF Assessment of Standards referenced in the SAR. Neither the SAR nor the NERC SPCTF Assessment of the Standards identified the need to expand the maintenance and testing program to include corrective maintenance. I recommend deleting the words: "and initiated resolution of identified maintenance correctable issues" from the last sentence of Measurement M4. I believe that failure to do so exceeds the scope of the SAR.
Response: **Thank you for your comments.** **1. Corrective maintenance is included within PRC-005-2 only in that the initiation of resolution of maintenance-correctable issues (discovered during maintenance activities) is included. The SDT considers this inclusion to be appropriate and necessary as part of the maintenance program.**				

Voter	Entity	Segment	Vote	Comment
2. Under frequency load shedding requirements, whether established by regional Entities (current practice) or by EC, are ERO requirements. **3. Clause 4.2.5.5 has been removed. Generator-connected station service transformers are essential to the continuing operation of the generation plant; therefore, protection on these system components is included within PRC-005-2 if the generation plant is a BES facility.** **4. Corrective maintenance is included within PRC-005-2 only in that the initiation of resolution of maintenance-correctable issues (discovered during maintenance activities) in included. The SDT considers the inclusion to be appropriate and necessary as part of the maintenance program.** **5. The SDT has determined that the fundamental concerns of Requirement R1, Part 1.5 and the associated changes are addressed within the PSMP definition, and that Requirement R1, Part 1.5 is not necessary; therefore, it has been removed. Requirement R4 has also been re-drafted to address various related concerns noted within comments. The associated VSL has also been revised. Please see Supplementary Reference Document, Section 8 for a discussion of this.** **6. Corrective maintenance is included within PRC-005-2 only in that the initiation of resolution of maintenance-correctable issues (discovered during maintenance activities) in included. The SDT considers the inclusion to be appropriate and necessary as part of the maintenance program.**				
David H. Boguslawski	Northeast Utilities	1	Negative	1) Requirement 1.5 states “Identify calibration tolerances or other equivalent parameters for each Protection System component type that establish acceptable parameters for the conclusion of maintenance activities”. This requirement is too vague and requires that the owner develop his own acceptable calibration tolerances for “each” protection system component type. The Owners internally generated calibration tolerances would then be subjected to the personal interpretation of what this requirement means by compliance officials and auditors. The confusion and divisiveness that this requirement will create far outweigh its potential benefits. 2) Due to the critical nature of the trip coil, it should be maintained more frequently if it is not monitored. Hence, it would be prudent to increase the test frequency of unmonitored trip coil so that it is more frequent than monitored trip coil. 3) In reference to the FAQ document, Section 5 on Station dc Supply, Question K, clarification is needed with respect to dc supplies for communication within the substation. For example, if the communication systems were run off a separate battery in separate area in a substation, would the standard apply to these batteries or not? 4) In section D.1.3., the statement regarding data retention for R2 needs to be reworded. The words “performance based maintenance program” should be changed to “time based maintenance program”, since R2 refers to a time based maintenance program.

Voter	Entity	Segment	Vote	Comment
Response: Thank you for your comments. 1. The SDT has determined that the fundamental concerns of Requirement R1, Part 1.5 and the associated changes are addressed within the PSMP definition, and that Requirement R1, Part 1.5 is not necessary; therefore, it has been removed. Requirement R4 has also been re-drafted to address various related concerns noted within comments. The associated VSL has also been revised. Please see Supplementary Reference Document, Section 8 for a discussion of this. 2. According to Table 1-5, trip coils of interrupting devices must be verified to operate every 6 years, rather than the 12-year interval. You can maintain these devices more frequently if you desire. 3. With respect to dc supply associated only with communication systems, we prescribe, within Table 1-2, that the communications system must be verified as functional every 3 months, unless the functionality is verified by monitoring. The specific station dc supply requirements (Table 1-4) do not apply to the dc supply associated only with communications systems. The SDT has decided to eliminate the FAQ and incorporate topics and discussion from the FAQ within the Supplementary Reference Document. Your comments have been considered within that activity. 4. The SDT concluded that R2 is redundant with R1, Part 1.4, and has deleted R2 (together with the associated Measure and VSL), and data retention that reflects the previous R2.				
Douglas G Peterchuck	Omaha Public Power District	1	Negative	The three newly added requirements not approved by the drafting team are confusing. 1. OPPD believes that Article 1.4 needs to be deleted from the standard. It is redundant and serves no purpose. 2. OPPD believes that Article 1.5 needs to be deleted from the standard. There is a major concern on what an “acceptable parameter” is and how it would be interpreted by the Regional Entities. 3. OPPD believes that Article 4.2 needs to be deleted from the standard. There is no need for this article if Article 1.5 is deleted.
Response: Thank you for your comments. 1. The SDT disagrees; Requirement R1, Part 1.4 supports Requirement R1, Part 1.2, and seems necessary to assure that entities have appropriately applied the longer intervals associated with monitored components. However, in consideration to your comment the SDT has revised R1.4 and has also removed R2 because of redundancy to Requirement R1, Part 1.4. 2. The SDT has determined that the fundamental concerns of Requirement R1, Part 1.5 and the associated changes are addressed within the PSMP definition, and that Requirement R1, Part 1.5 is not necessary; therefore, it has been removed. 3. Requirement R4 has also been re-drafted to address various related concerns noted within comments. The associated VSL has also been revised. Please see Supplementary Reference Document, Section 8 for a discussion of this..				
Chifong L. Thomas	Pacific Gas and Electric Company	1	Negative	1. PG&E submits a Negative vote on Draft 3 of PRC-005-2 due to the addition of Requirement R1, Part 1.5. We do not agree with the addition of Requirement R1, Part 1.5 to the standard, which requires the Owners to "identify calibration tolerances or other equivalent parameters for each Protection System component type". We feel this is too prescriptive and does not belong in the PSMP which should remain at a higher level of detail. This new requirement, as written, can subject the Transmission Owner, Generation Owner or Distribution Provider to vague interpretations

Voter	Entity	Segment	Vote	Comment
				of what the requirement means by compliance officials. Additionally, the new requirement could require documenting thousands of calibration tolerances or other equivalent parameters for companies such as PG&E that use many different types of relays. This level of detail does not belong in the PSMP and would make it nearly impossible to manage. Rather, the calibration tolerances used to test the protection system components should reside in the Transmission Owner, Generation Owner and Distribution Provider's test procedure documents, test macros, or relay instruction manuals. PG&E also has comments on the Implementation Plan document. 2. PG&E does not agree with the time frames listed for implementation of Requirements R1, R2, R3 and R4, as explained below: a. Implementation plan for Requirement R1: Time was extended from three months to twelve months following regulatory approval which we agree with. For those jurisdictions where no regulatory approval is required it would seem that the time frame should also be extended to at least twelve months following NERC Board approval. However, it is still listed as six months following NERC Board approval. b. Implementation plan for Requirements R2, R3 and R4: For Protection System Components with maximum allowable intervals less than 1 year, it does not make sense to require 100% compliance after twelve months following regulatory approval, when this is the same time frame for compliance with Requirement R1 for establishment of the new PSMP. The implementation time window for Requirements R2, R3 and R4 should follow the implementation of Requirement R1 which establishes the new PSMP. So the dates listed for 100% compliance with Requirements R2, R3 and R4 should all be pushed out by 12 months each. c. Following is a summary time line for suggested implementation requirements. o Months 1-12 Establish PSMP per R1 i. Month 12+ Begin performing maintenance under new PSMP ii. Month 24 100% compliance date for R2, R3, R4, for components with max allowable intervals less than 1 year. iii. 3 Calendar Years 100% compliance date for R2, R3, R4, for components with max allowable intervals 1 year or more, but 2 years or less.

Voter	Entity	Segment	Vote	Comment
				iv. 3 Calendar Years 30% compliance date for R2, R3, R4, for components with max allowable intervals of 6 years. v. 5 Calendar Years 60% compliance date for R2, R3, R4, for components with max allowable intervals of 6 years. vi. 7 Calendar Years 100% compliance date for R2, R3, R4, for components with max allowable intervals of 6 years. 3. Overall the updated standard is a huge improvement over Draft 2 in terms of structure of the tables and presentation, which simplifies the standard quite a bit. PG&E would have been in support of Draft 3 if the requirement R1.5 had not been added.
Response: **Thank you for your comments.** **1. The SDT has determined that the fundamental concerns of Requirement R1, Part 1.5 and the associated changes are addressed within the PSMP definition, and that Requirement R1, Part 1.5 is not necessary; therefore, it has been removed. Requirement R4 has also been re-drafted to address various related concerns noted within comments. The associated VSL has also been revised. Please see Supplementary Reference Document, Section 8 for a discussion of this.** **2. The Implementation Plan for R1 has been changed from six months to twelve months, and the Implementation Plan for Protection System Components with maximum allowable intervals less than 1 year has been changed from 12 months to 15 months in consideration of your comment. The Implementation Plan for R4 has been revised to add one year to all established dates.** **3. The SDT has determined that the fundamental concerns of Requirement R1, Part 1.5 and the associated changes are addressed within the PSMP definition and that Requirement R1, Part 1.5 is not necessary. Therefore, it has been removed. The associated VSL has also been revised.**				
Brenda L Truhe	PPL Electric Utilities Corp.	1	Negative	PPL Electric Utilities ("PPL EU") appreciate the hard work and efforts of the Standards Drafting Team in reaching this point in the standards development process. The basis for the negative vote is the addition of Requirement R1.5 (calibration tolerances) and R4.2 to the standard. This requirement will provide the opportunity for auditors to decide if the testing criteria for whether a relay passes a test or not is acceptable. PPL EU recommends that Requirement R1.5 be deleted from the standard.
Response: **Thank you for your comments. The SDT has determined that the fundamental concerns of Requirement R1, Part 1.5 and the associated changes are addressed within the PSMP definition, and that Requirement R1, Part 1.5 is not necessary; therefore, it has been removed. Requirement R4 has also been re-drafted to address various related concerns noted within comments. The associated VSL has also been revised. Please see Supplementary Reference Document, Section 8 for a discussion of this.**				
Kenneth D. Brown	Public Service Electric and Gas Co.	1	Negative	The PSEG Companies do not agree with the Facilities as currently described in section 4.2.5.5. Please refer to detailed comments provided in the formal Comment Form.
Response: **Thank you for your comments. Please see our responses to your comments from the formal comment period.**				

Voter	Entity	Segment	Vote	Comment
Pawel Krupa	Seattle City Light	1	Negative	Comment: The proposed Standard PRC-005-2 is an improvement over the previous draft in that it provides more consistency in maintenance and testing duration internals. Notwithstanding, two issues are of concern to Seattle City Light such that it is compelled to vote no: 1) the establishment of bookends for standard verification and 2) the implementation timelines for entities with systems where electro-mechanical relays still compose a significant number of components in their protection systems. 1. Bookends: Proposed Standard PRC-005-2 specifies long inspection and maintenance intervals, up to 12 years, which correspondingly exacerbates the so-called “bookend” issue. To demonstrate that interval-based requirements have been met, two dates are needed - bookends. Evidencing an initial date can be problematic for cases where the initial date would occur prior to the effective date of a standard. NERC has provided no guidance on this issue, and the Regions approach it differently. Some, such as Texas Regional Entity, require initial dates beginning on or after the effective date of a Standard. Compliance with intervals is assessed only once two dates are available that occur on or after a standard took effect. Other regions, such as Western Electricity Coordinating Council (WECC), require that entities evidence an initial date prior to the effective date of a standard. For WECC, compliance with intervals is assessed as soon as a standard takes effect. Such variation makes application of standards involving bookends uncertain, arbitrary, capricious, and in the case of WECC, possibly illegal. Proposed Standard PRC-005-2 will be another such standard. Indeed this Standard will involve by far the largest number of bookends of any NERC standard - many thousands for a typical entity. Furthermore, the long inspection and maintenance intervals introduced in the draft will require entities in WECC, for instance, to evidence initial bookend dates prior to the date original PRC-005-1 took effect. For the 12-year intervals for CTs and VTs in proposed Standard PRC-005-2, many initial dates will occur prior to the 2005 Federal Power Act that authorized Mandatory Reliability Standards and even reach back before the 2003 blackout that catalyzed the effort to pass the Federal Power Act. As a result, many entities in WECC maybe at risk of being found in violation of proposed Standard PRC-005-2 immediately upon its implementation. Seattle City Light requests that NERC address the bookends issue, either within proposed Standard PRC-005-2 or in a

Voter	Entity	Segment	Vote	Comment
				separate, concurrent document. 2. Legacy Systems: Many entities still have legacy protection systems that rely upon electro-mechanical relays. Effective testing approaches differ between electro-mechanical and digital relay systems. Thus, although the proposed standard rightly looks to the future of digital relays by specifying testing and maintenance focused on protection systems as a whole, the proposed implementation timelines create a level of hardship for those utilities with legacy systems. In example, auxiliary relay and trip coil testing may be essential to prove the correct operation of complex, multi-function digital protection systems. However, for legacy systems with single-function electro-mechanical components, the considerable documentation and operational testing needed to implement and track such testing is not necessarily proportional to the relative risk posed by the equipment to the bulk electric system. Performance testing of electro-mechanical systems, particularly regarding control circuits, will require extensive disconnection and reconnection of portions of the circuits. Such activities will likely cause far more problems on restoration-to-service than they will locate and correct. As such, to assist entities in their implementation efforts, we believe provision of alternatives are necessary, such as additional implementation time through phasing and/or through technical feasability exceptions.
Response: **Thank you for your comments.** **1. This issue has been addressed by NERC in Compliance Application Notice CAN-008 "PRC-005 R2 Pre-June 18 Evidence".** **2. Please see Sections 8 and 15.3 of the Supplementary Reference Document for a discussion on this topic. FERC Order 693 directs that NERC establish requirements for the maintenance of the Protection System and control circuitry is a portion thereof. Therefore, requirements for the maintenance of the control circuitry are necessary and the SDT has developed those requirements in a fashion that affords entities with the opportunity to best meet those requirements.**				
Horace Stephen Williamson	Southern Company Services, Inc.	1	Negative	Reference the new Requirements R.1.5 and R.4.2 which are new to this posting: R.1.5 requires the Owners to "identify calibration tolerances or other equivalent parameters for each Protection System component type" is too intrusive and divisive for what it brings to the reliability of the BES. The entire SDT needs to thoroughly discuss these new requirements and modify or delete them. Note: We have also made various requests for clarification to the FAQ and Supplemental Reference document in our Response to Comments which we are not including here.
Response: **Thank you for your comments. The SDT has determined that the fundamental concerns of Requirement R1, Part 1.5 and the associated changes are addressed within the PSMP definition, and that Requirement R1, Part 1.5 is not necessary; therefore, it has been removed. Requirement R4 has also been re-drafted to address various related concerns noted within comments. The associated VSL has also been revised. Please see Supplementary Reference Document, Section 8 for a discussion of this.**				

Voter	Entity	Segment	Vote	Comment
Larry Akens	Tennessee Valley Authority	1	Negative	NERC is making significant changes to this sizeable standard and only allowing minimum comment period. While this is a good standard that has clearly taken many hours to develop, we are primarily voting "NO" because of the hurried fashion it is being commented, voted, and reviewed.
Response: **Thank you for your comments. Because of the urgent priority placed on this Standard by NERC, this Standard was posted for a 30-day formal comment period with a concurrent 10-day ballot period at the conclusion of that comment period, even though the Standard Development Process allows for a maximum 45-day formal comment period.**				
Brandy A Dunn	Western Area Power Administration	1	Negative	1) Western disagrees with the requirement R1, Part 1.5 that requires identifying "calibration tolerances or equivalent parameters for each Protection System component~" This requirement will add a burdensome, manual documentation of thousands of tolerances and parameters that are now part of multiple automated software programs and routines. These programs were purchased and developed over numerous years of testing experience by Western and testing equipment manufacturers. The fact that these tolerance and parameters are automated to Pass/Fail program notifications, gives our Maintenance Divisions repeatable testing programs that are not dependent on personnel interpretations. Extracting all these tolerances and parameters from these programs provides no benefit for our PSMP. 2) Western disagrees with the wording of the R4.2 requirement referencing the Part 1.5 of R1. The requirements of R4 are that you are to perform the appropriate maintenance activity and the associated testing. The fact that the testing was done and the equipment passed the testing meets the compliance for R4. If the equipment fails the testing, it then becomes a maintenance correctable issue, that requires adjustment or replacing, with further testing until the equipment passes the required testing. Documenting thousands of tolerances and parameters, for possibly thousands of components, serves no useful purpose for our PSMP or compliance documentation.
Response: **Thank you for your comments. The SDT has determined that the fundamental concerns of Requirement R1, Part 1.5 and the associated changes are addressed within the PSMP definition, and that Requirement R1, Part 1.5 is not necessary; therefore, it has been removed. Requirement R4 has also been re-drafted to address various related concerns noted within comments. The associated VSL has also been revised. Please see Supplementary Reference Document, Section 8 for a discussion of this.**				
Gregory L Pieper	Xcel Energy, Inc.	1	Negative	"We feel that several improvements were made since the last draft. However, we feel that some gaps exist that should be addressed before moving this project forward. We have detailed our issues in our formal comments."
Response: **Thank you for your comments. Please see our responses to your comments from the formal comment period.**				

Voter	Entity	Segment	Vote	Comment
Kim Warren	Independent Electricity System Operator	2	Negative	1. Requirement R1, Part 1.5 is vague and needs clarification. It is not clear what "Identify calibration tolerances or other equivalent parameters" means and this may be subject to different interpretations by entities and compliance enforcement personnel. 2. Additionally, in the Implementation plan for Requirement R1, we recommend changing "six" to "fifteen" to restore the 3-month time difference between the durations of the implementation periods for jurisdictions that do and don't require regulatory approval, which existed in the previous draft. This change will ensure equity for those entities located in jurisdictions that do not require regulatory approval as is the case here in Ontario. More importantly it supports the IESO's strong belief in the principle that reliability standards should be implemented in an orderly and coordinated fashion across regions to ensure system reliability is not compromised.
Response: **Thank you for your comments.** **1. The SDT has determined that the fundamental concerns of Requirement R1, Part 1.5 and the associated changes are addressed within the PSMP definition, and that Requirement R1, Part 1.5 is not necessary; therefore, it has been removed. Requirement R4 has also been re-drafted to address various related concerns noted within comments. The associated VSL has also been revised. Please see Supplementary Reference Document, Section 8 for a discussion of this.** **2. In consideration of your comment, "six" has been modified to "twelve" in the Implementation Plan for Requirement R1, making it consistent with the remainder of the Implementation Plan**				
Richard J. Mandes	Alabama Power Company	3	Negative	Reference the new Requirements R.1.5 and R.4.2 which are new to this posting: R.1.5 requires the Owners to "identify calibration tolerances or other equivalent parameters for each Protection System component type" is too intrusive and divisive for what it brings to the reliability of the BES. The entire SDT needs to thoroughly discuss these new requirements and modify or delete them. Note: We have also made various requests for clarification to the FAQ and Supplemental Reference document in our Response to Comments which we are not including here.
Response: **Thank you for your comments. The SDT has determined that the fundamental concerns of Requirement R1, Part 1.5 and the associated changes are addressed within the PSMP definition, and that Requirement R1, Part 1.5 is not necessary; therefore, it has been removed. Requirement R4 has also been re-drafted to address various related concerns noted within comments. The associated VSL has also been revised. Please see Supplementary Reference Document, Section 8 for a discussion of this.**				
Bob Reeping	Allegheny Power	3	Negative	Allegheny Power applauds the hard work that the Standards Draft Team has exhibited in producing a clear and enforceable standard that will increase the reliability of the Bulk Electric System. However, the addition of requirement 1.5 is such a significant change in scope from the last draft that a further review of the potential impact and any implementation concerns is required by AP and the industry in general before we can consider voting in-favor of this standard.

Voter	Entity	Segment	Vote	Comment
Response: **Thank you for your comments. The SDT has determined that the fundamental concerns of Requirement R1, Part 1.5 and the associated changes are addressed within the PSMP definition, and that Requirement R1, Part 1.5 is not necessary; therefore, it has been removed. Requirement R4 has also been re-drafted to address various related concerns noted within comments. The associated VSL has also been revised. Please see Supplementary Reference Document, Section 8 for a discussion of this.**				
Raj Rana	American Electric Power	3	Negative	Restructured Tables: 1. Table 1.5 (Control Circuitry), row 4, indicates a maximum interval of 12 years for unmonitored control circuitry, yet other portions of control circuitry have a maximum interval of 6 years. AEP does not understand the rationale for the difference in intervals, when in most cases, one verifies the other. Also, unmonitored control circuitry is capitalized in row 4 such that it infers a defined term. 2. In the first row of table 1-4 on page 16, it is difficult to determine if it is a cell that wraps from the previous page or is a unique row. This is important because the Maximum Maintenance Intervals are different (i.e. 18 months vs 6 years). It is difficult to determine to which elements the 6 year Maximum Maintenance Interval applies. AEP suggests repeating the heading "Monitored Station dc supply (excluding UFLS and UVLS) with: Monitor and alarm for variations from defined levels (See Table 2):" for the bullet points on this page. VSLs, VRFs and Time Horizons: 3. The VSL table should be revised to remove the reference to the Standard Requirement 1.5 in the R1 "High" VSL. 4. All four levels of the VSL for R2 make reference to a "condition-based PSMP." However, nowhere in the standard is the term "condition-based" used in reference to defining ones PSMP. The VSL for R2 should be revised to remove reference to a condition-based PSMP; alternatively the Standard could be revised to include the term "condition-based" within the Standard Requirements and Table 1. 5. In multiple instances, Table 1 uses the phrase "No periodic maintenance specified" for the Maximum Maintenance Interval. Is this intended to imply that a component with the designated attributes is not required to have any periodic maintenance? If so, the wording should more clearly state "No periodic maintenance required" or perhaps "Maintain per manufacturers recommendations." Failure to clearly state the maintenance requirement for these components leaves room for interpretation on whether a Registered Entity has a maintenance and testing program for devices where the Standard has not specified a periodic maintenance interval and the manufacturer states that no maintenance is required. FAQ and Supplementary Reference:

Voter	Entity	Segment	Vote	Comment
				6. With such a complex standard as this, the FAQ and Supplementary Reference documents do aid the Protection System owner in demystifying the requirements. But AEP holds strong doubt on how much weight the documents carry during audits. It would be better to include them as an appendix in the actual standard, but in a more compact version with the following modifications: a. Section 5 of the Supplementary Reference, refers to "condition-based" maintenance programs. However, nowhere in the standard is the term "condition-based" used in reference to defining ones PSMP. The Supplementary Reference should be revised to remove reference to a condition-based PSMP; alternatively the Standard could be revised to include the term "condition-based" within the Standard Requirements and Table 1. b. Section 15.7, page 26, appears to have a typographical error "...can all be used as the primary action is the maintenance activity..." c. Figure 2 is difficult to read. The figure is grainy and the colors representing the groups are similar enough that it is hard to distinguish between groups. "Frequently-Asked Questions": 7. With such a complex standard as this, the FAQ and Supplementary Reference documents do aid the Protection System owner in demystifying the requirements. But AEP holds strong doubt on how much weight the documents carry during audits. It would be better to include them as an appendix in the actual standard, but in a more compact version with the following modifications: a. The section "Terms Used in PRC-005-2" is blank and should be removed as it adds no value. b. Section I.1 and Section IV.3.G reference "condition-based" maintenance programs. However, nowhere in the standard is the term "condition-based" used in reference to defining ones PSMP. The FAQ should be revised to remove reference to a condition-based PSMP; alternatively the Standard could be revised to include the term "condition-based" within the Standard Requirements and Table 1. c. The second sentence to the response in Section I.1 appears to have a typographical error "... an entity needs to and perform ONLY time-based...". General:

Voter	Entity	Segment	Vote	Comment
				8. Standards Requirement 1.5 and the reference to R1.5 in Requirement 4.2 should be removed. Specifying calibration tolerances for every protection system component type, while a seemingly good idea, represents a substantial change in the direction of the standard. It would be very onerous for companies to maintain a list of calibration tolerances for every protection system component type and show evidence of such at an audit. AEP believes entities need the flexibility to determine what acceptance criteria is warranted and need discretion to apply real-time engineering/technician judgment where appropriate. 9. Three different types of maintenance programs (time-based, performance-based and condition-based) are referenced in the standard or VSLs, yet the time-based and condition-based programs are neither defined nor described. Certain terms defined within the definition section (such as Countable Event or Segment) only make sense knowing what those three programs entail. These programs should be described within the standard itself and not assume a knowledge of material in the Supplementary Reference or FAQ. 10. "Protective relay" should be a defined term that lists relay function for applicability. There are numerous 'relays' used in protection and control schemes that could be lumped in and be erroneously included as part of a Protection System. For example, reclosing or synchronizing relays respond to voltage and hence could be viewed by an auditor as protective relays, but they in fact perform traditional control functions versus traditional protective functions. 11. The Data Retention requirement of keeping maintenance records for the two most recent maintenance performances is a significant hurdle for any owners to abide by during the initial implementation period. The implementation plan needs to account for this such that Registered Entities do not have to provide retroactive testing information that was not explicitly required in the past.

Response: **Thank you for your comments.**

1. **The 6-year activities are all related to components with "moving parts", and the 12-year activities are related to the other portions of the control circuitry. The capitalized term has been corrected and additional changes have been made.**
2. **Table 1-4 has been modified in consideration of your comments.**
3. **The SDT has determined that the fundamental concerns of Requirement R1, Part 1.5 and the associated changes are addressed within the PSMP definition, and that Requirement R1, Part 1.5 is not necessary; therefore, it has been removed. The associated VSL has also been revised.**

Voter	Entity	Segment	Vote	Comment
				4. The SDT concluded that Requirement R2 is redundant to Requirement R1, Part 1.4 and has deleted Requirement R2 (together with the Measures and & VSL). 5. If the indicated monitoring attributes are present, no "hands-on" periodic maintenance is required, as the monitoring of the component is providing a continuing indication of its functionality. 6. The discussion within the Supplementary Reference and FAQ are informative, not normative, and thus do not belong as part of the standard. D. The Supplementary Reference Document discusses condition-based maintenance in a conceptual manner, as a generally-recognized term. The SDT did make some changes within the Supplementary Reference document to clarify the manner in which condition-based maintenance is discussed. The SDT decided to eliminate the FAQ document and incorporate the FAQ's contents into the Supplementary Reference Document as appropriate. The SDT considered your comments during this activity. E. This clause has been corrected. 7. The discussion within the Supplementary Reference and FAQ are informative, not normative, and thus do not belong as part of the standard. b) The SDT decided to eliminate the FAQ document and incorporate the FAQ's contents into the Supplementary Reference Document as appropriate. The SDT considered your comments during this activity. c) The SDT decided to eliminate the FAQ document and incorporate the FAQ's contents into the Supplementary Reference Document as appropriate. The SDT considered your comments during this activity. d) The SDT decided to eliminate the FAQ document and incorporate the FAQ's contents into the Supplementary Reference Document as appropriate. The SDT considered your comments during this activity. 8. The SDT has determined that the fundamental concerns of Requirement R1, Part 1.5 and the associated changes are addressed within the PSMP definition, and that Requirement R1, Part 1.5 is not necessary; therefore, it has been removed. Requirement R4 has also been re-drafted to address various related concerns noted within comments. The associated VSL has also been revised. Please see Supplementary Reference Document, Section 8 for a discussion of this. 9. The term, "condition-based" has been removed from the draft standard. The other terms are used, but are clear in the context in which they are used. 10. "Protective relay" is defined by IEEE, and the SDT sees no need to either change the definition or to repeat the definition with PRC-005. Further, the applicability of generically-described protective relays is defined by the Applicability clause of PRC-005-2. 11. In order that a Compliance Monitor can be assured of compliance, the SDT believes that the Compliance Monitor will need the data of the most recent performance of the maintenance, as well as the data of the preceding one to validate that entities have been in compliance since the last audit (or currently, since the beginning of mandatory compliance). The SDT has specified the data retention in the posted standard to establish this level of documentation. This seems to be consistent with the current practices of several Regional Entities.

Voter	Entity	Segment	Vote	Comment
Rebecca Berdahl	Bonneville Power Administration	3	Negative	Please refer to BPA's submitted comments on 12/16/10.
Response: **Thank you for your comments. Please see our responses to your comments from the formal comment period.**				
Steve Alexanderson	Central Lincoln PUD	3	Affirmative	WECC does not use the definition of the BES that NERC supplied to FERC via http://www.nerc.com/docs/docs/ferc/RM06-16-6-14-07CompFilingPar77ofOrder693FINAL.pdf, so the answer to FAQ III.1.3 (page 19-20) is not accurate.
Response: **Thank you for your comments. The SDT decided to eliminate the FAQ document and incorporate the FAQ's contents into the Supplementary Reference Document as appropriate. The SDT considered your comments during this activity.**				
Gregg R Griffin	City of Green Cove Springs	3	Negative	1. UFLS and UVLS maintenance and testing is greatly expanded, e.g., we interpreted PRC-008/011 as being only the UFLS/UVLS equipment. The new PRC-005 sweeps in other protection system components, e.g., communications (probably not applicable), voltage and current sensing devices (e.g., instrument transformers), Station DC supply, control circuitry. What's key about this is that these components are all part of distribution system protection, so, these activities would not be covered by other BES protection system maintenance and testing. I'm sure we are testing batteries and the like, but, we are probably not testing battery chargers and control circuitry, and, in many cases distribution circuits are such that it is very difficult, if not impossible, to test control circuitry to the trip coil of the breaker without causing an outage of the customers on that distribution circuit. There is no real reliability need for this either. Unlike Transmission and Generation Protection Systems which are needed to clear a fault and may only have one or two back-up systems, there are thousands and thousands of UFLS relays and if one fails to operate, it will not be noticeable to the event. It does make sense to test the relays themselves in part to ensure that the regio0nsl UFLS program is being met, but, to test the other protection system components is not worthwhile. Note that DC Supplies and most of the control circuitry of distribution lines are "tested" frequently by distribution circuits clearing faults such as animals, vegetation blow-ins, lightning, etc., on distribution circuits, reducing the value of testing to just about null. However, this version is better than prior versions because it essentially requires the entity to determine it's own period of maintenance and testing for UFLS/UVLS for DC Supply and control circuitry.

Voter	Entity	Segment	Vote	Comment
				2. Applicability, 4.2.1, should reflect the Y&W and Tri-State interpretation (Project 2009-17) of "transmission Protection System" and should state: "Protection Systems applied on, or designed to provide protection for a BES Facility and that trips a BES Facility" 3. Applicability, 4.2. - does not reflect the interpretation of Project 20009-10 that excludes non-electrical protection (e.g., sudden pressure relays) and auxiliary relays. Because the definition of Protection System (recently approved) does not clearly exclude "non-electrical" protection,the Applicability section should. For instance,, a vibration monitor, steam pressure, etc. protection of generators, sudden pressure protection of transformers, etc. should not be included in the standard. An alternative is to change the definition of Protection System to make sure it only includes electrical 4. the VRF of R1 should be Low since the attached tables are essentially the PSMP.
Response: **Thank you for your comments.** **1. For UFLS and UVLS, the maintenance activities related to station dc supply and control circuitry are somewhat constrained relative to similar activities for Protection Systems in general. Regardless, without proper functioning of these component types, UFLS and UVLS will not respond as expected, and will therefore degrade BES system reliability, particularly during the stressed system conditions for which UFLS and UVLS are installed. Relative to control circuitry, Table 1-5 specifically excludes UFLS and UVLS from maintenance activities related to the interrupting device trip coil.** **2. This interpretation is not yet approved by FERC. When this interpretation is approved, the SDT will incorporate it within PRC-005-2. However, the SDT has made changes to Applicability 4.2.1 in consideration of your comments.** **3. The recently-balloted revision of the definition of Protection System, which has been approved by the NERC Board of Trustees and will soon be filed with FERC for approval, clearly includes only protective relays that respond to electrical quantities. As for auxiliary relays, the interpretation to which you refer states that they are not explicitly included, but are included to the degree that an entity's Protection System control circuitry addresses them(which has been identified as a reliability gap), and are being added to PRC-005-2 to resolve the gap.** **4. The SDT disagrees; the Tables establish the intervals and activities, and Requirement R1 addresses the establishment of an entity's individual PSMP.**				
Bruce Krawczyk	ComEd	3	Negative	The addition of the requirement R1.5 and associated wording has resulted in Exelon to vote No on the standard. While Exelon does specify Protection System tolerances and parameters in many maintenance documents; attempting to establish documented requirements for each component type is not practical. Additionally, this can leave much to the discretion of an auditor as to how in-depth tolerances need to be. There are many equipment and applications variations, many of which can utilize generic values while others require very specific value

Voter	Entity	Segment	Vote	Comment
				ranges. There are many instances where a very specific component tolerance is required for one application, but the same component doesn't require a tolerance in a different application. This could lead to entities having to justify why one application with a common component requires a narrow range versus the same component in another application can use a generic value or no tolerance. The last part of the requirement is also not clear. If a parameter is established, the R1.5 requirement is inferring component must meet an acceptable parameter to conclude the maintenance activity. There are many instances when a component is found out of a tolerance, but the level does not require immediate action and can even be scheduled for remediation at the next maintenance cycle. The wording in R1.5 appears to conflict with the R4.2 which indicates maintenance activities can be conclude as long as corrective maintenance is initiated as a result of identifying the condition.
Response: **Thank you for your comments. The SDT has determined that the fundamental concerns of Requirement R1, Part 1.5 and the associated changes are addressed within the PSMP definition, and that Requirement R1, Part 1.5 is not necessary; therefore, it has been removed. Requirement R4 has also been re-drafted to address various related concerns noted within comments. The associated VSL has also been revised. Please see Supplementary Reference Document, Section 8 for a discussion of this.**				
Peter T Yost	Consolidated Edison Co. of New York	3	Negative	The Tables - 1. The wording "Component Type" is not necessary in each title. Just the equipment category should be listed--what is now shown as "Component Type - Protective Relay", should be Protective Relay. However, Protective Relay is too general a category. Electromechanical relays, solid state relays, and microprocessor based relays should have their own separate tables. So instead of reading Protective Relay in the title, it should read Electromechanical Relays, etc. This will lengthen the standard, but will simplify reading and referring to the tables, and eliminate confusion when looking for information. 2. The "Note" included in the heading is also not necessary. "Attributes" is also not necessary in the column heading, "Component" suffices. Other Comments – 3. In general, the standard is overly prescriptive and complex. It should not be necessary for a standard at this level to be as detailed and complex as this standard is. Entities working with manufacturers, and knowledge gained from experience can develop adequate maintenance and testing programs. 4. Why are "Relays that respond to non-electrical inputs or impulses (such as, but not limited to, vibration, pressure, seismic, thermal or gas accumulation)…" not included? The output contacts from these devices

Voter	Entity	Segment	Vote	Comment
				are oftentimes connected in tripping or control circuits to isolate problem equipment. 5. Due to the critical nature of the trip coil, it must be maintained more frequently if it is not monitored. Trip coils are also considered in the standard as being part of the control circuitry. Table 1-5 has a row labeled "Unmonitored Control circuitry associated with protective functions", which would include trip coils, has a "Maximum Maintenance Interval" of "12 Calendar Years". Any control circuit could fail at any time, but an unmonitored control circuit could fail, and remain undetected for years with the times specified in the Table (it might only be 6 years if I understand that as being the trip test interval specified in the table). Regardless, if a breaker is unable to trip because of control circuit failure, then the system must be operated in real time assuming that that breaker will not trip for a fault or an event, and backup facilities would be called upon to operate. Thus, for a line fault with a "stuck" breaker (a breaker unable to trip), instead of one line tripping, you might have many more lines deloaded or tripped because of a bus having to be cleared because of a breaker failure initiation. The bulk electric system would have to be operated to handle this contingency. 6. In reference to the FAQ document, Section 5 on Station dc Supply, Question K, clarification is needed with respect to dc supplies for communication within the substation. For example, if the communication systems were run off a separate battery in separate area in a substation, would the standard apply to these batteries or not? 7. To define terms only as they are used in PRC-005-2 is inviting confusion. Although they may be unique to PRC-005-2, some or all of them may be used in future standards, some already may be used in existing standards, and may or may not be deliberately defined. Consistency must be maintained, not only for administrative purposes, but for effective technical communications as well. 8. What is the definition of "Maintenance" as used in the table column "Maximum Maintenance Interval"? Maintenance can range from cleaning a relay cover to a full calibration of a relay. 9. A control circuit is not a component, it is made up of components. 10. Sub-requirement 1.5 needs to be clarified. It is not clear what "Identify calibration tolerances or other equivalent parameters…" means, and may be subject to different interpretations by entities and compliance enforcement personnel. 11. In the Implementation plan for Requirement R1, recommend changing

Voter	Entity	Segment	Vote	Comment
				"six" to fifteen. This change would restore the 3-month time difference that existed in the previous draft, between the durations of the implementation periods for jurisdictions that do and do not require regulatory approval. It will ensure equity for those entities located in jurisdictions that do not require regulatory approval, as is the case in Ontario. 12. The 'box' for "Monitored Station dc supply..." in Table 1-4 is not clear. It seems to continue to the next page to a new box. There are multiple activities without clear delineation. 13. Regarding station service transformers, Item 4.2.5.5 under Applicability should be deleted. The purpose of this standard is to protect the BES by clearing generator, generator bus faults (or other electrical anomalies associated with the generator) from the BES. Having this standard apply to generator station service transformers, that have no direct connection to the BES, does meet this criteria. The FAQs (III.2.A) discuss how the loss of a station service transformer could cause the loss of a generating unit, but this is not the purpose of PRC-005. Using this logic than any system or device in the power plant that could cause a loss of generation should also be included. This is beyond the scope of the NERC standards.

Response: **Thank you for your comments.**

1. The SDT believes that the table headings are appropriate as reflected in the draft standard.

2. The SDT believes that the table headings are appropriate as reflected in the draft standard.

3. The intervals and activities specified are believed by the SDT to be technically effective, in a fashion that may be consistently monitored for compliance. Further, FERC Order 693 directs NERC to establish maximum allowable intervals, which implies that minimum activities also need to be prescribed. If an entities' experience is that components require less-frequent maintenance, a performance-based program in accordance with R3 and Attachment A is an option.

4. The SDT concentrated their efforts on protective relays which use the entire group of component types within the Protection System definition. Also, there is currently no technical basis for the maintenance of the devices which respond to non-electrical quantities on which to base mandatory standards related either to activities or intervals. Absent such a technical basis, we are currently unable to establish mandatory requirements, but may do so in the future if such a technical basis becomes available.

5. According to Table 1-5, trip coils of interrupting devices must be verified to operate every 6 years, rather than the 12-year interval. You can maintain these devices more frequently if you desire

6. With respect to dc supply associated only with communication systems, we prescribe, within Table 1-2, that the communications system must be verified as functional every 3 months, unless the functionality is verified by monitoring. The

Voter	Entity	Segment	Vote	Comment
				specific station dc supply requirements (Table 1-4) do not apply to the dc supply associated only with communications systems. The SDT decided to eliminate the FAQ document and incorporate the FAQ's contents into the Supplementary Reference Document as appropriate. The SDT considered your comments during this activity. **7. The SDT has proposed these terms for use only within PRC-005-2 because we are concerned that other uses of these terms, either now or in the future, may not be consistent with the terms used here. They are defined only for clarify within this standard.** **8. As used in the "Maximum Maintenance Interval" column title of the table, maintenance refers to whatever activities are specified in the Activities column. The term is capitalized in the column title in conformance with normal editorial practice as a title, rather than as a definition.** **9. For purposes of this standard, the control circuit IS defined as one component type.** **10. The SDT has determined that the fundamental concerns of Requirement R1, Part 1.5 and the associated changes are addressed within the PSMP definition, and that Requirement R1, Part 1.5 is not necessary; therefore, it has been removed. Requirement R4 has also been re-drafted to address various related concerns noted within comments. The associated VSL has also been revised. Please see Supplementary Reference Document, Section 8 for a discussion of this.** **11. In consideration of your comment, "six" has been modified to "twelve" in the Implementation Plan for R1, making it consistent with the remainder of the Implementation Plan.** **12. Table 1-4 has been further modified for clarity.** **13. In response to many comments, including yours, the SDT has removed 4.2.5.5 from the Applicability of the standard.**
David A. Lapinski	Consumers Energy	3	Negative	We have the following comment on the revisions, specifically sub-requirement R1.12a, which states, "Set the maximum torque angle (MTA) to 90 degrees or the highest supported by the manufacturer.". We have no issue with this requirement on transmission lines that are 200 kV or greater. However, we do have a concern with applying requirement R1.12a on lower voltage lines now that the Transmission Relay Loadability Standard is being revised to included selected equipment 200 kV and below. The positive-sequence line angle on lower voltage lines, such as 69 kV or 46 kV, is significantly lower than 90 degrees. The positive-sequence line angle for 3/0 ACSR, for example, is only 55 degrees. Setting a 90 degree MTA on these lines would require a much larger reach setting to provide adequate line protection. In some cases, especially for lines with long spurs and poor line conductor, the increased reach setting may actually provide less loadability than a reach setting based on an MTA set at the positive-sequence line angle. A 90 degree MTA also dramatically reduces the resistive fault coverage for these lines. For these reasons, we would propose a modification to sub-

Voter	Entity	Segment	Vote	Comment
				requirement R1.12a as follows: Set the maximum torque angle (MTA) to 90 degrees or the highest supported by the manufacturer on 200 kV or greater transmission lines. Set the maximum torque angle (MTA) to the positive-sequence line angle on transmission lines less than 200 kV.
Response: **Thank you for your comments. This comment appears to apply to PRC-023-2 (Project 2010-17), which is a separate activity, and is not apparently relevant to PRC-005-2.**				
Michael F Gildea	Dominion Resources Services	3	Negative	Dominion is opposed to this version because Requirement R1.5 is overly prescriptive, requiring an extraordinary level of documentation, with little anticipated improvement in reliability.
Response: **Thank you for your comments. The SDT has determined that the fundamental concerns of Requirement R1, Part 1.5 and the associated changes are addressed within the PSMP definition, and that Requirement R1, Part 1.5 is not necessary; therefore, it has been removed. Requirement R4 has also been re-drafted to address various related concerns noted within comments. The associated VSL has also been revised. Please see Supplementary Reference Document, Section 8 for a discussion of this.**				
Henry Ernst-Jr	Duke Energy Carolina	3	Negative	1. R1.4 and R1.5 need more information to provide clarity for compliance. It's unclear to us what the expectation is for compliance documentation for "monitoring attributes and related maintenance activities" in R1.4 and "calibration tolerances or other equivalent parameters" in R1.5. This is fairly straightforward for relays, but not for other component types. Either provide clarity or delete these requirements. 2. R4.2 - it is critical that more clarity be provided for R1.5 so that we can also understand what the compliance expectation is for R4.2 3. M4 - Need to clarify that these pieces of evidence are all "or", not "and" (i.e. any of the listed examples are sufficient for compliance). We reiterate the need for additional clarity on R1.5 and R4.2 such that compliance can be demonstrated for all component types. 4. Table 2 - We are fairly clear on the expectation for relays, but need more clarity on the expectation for other component types. Also, need to change the phrase "corrective action can be taken" to "corrective action can be initiated", consistent with the Supplementary Reference document. 5. VSL for R1 - Sub-requirement R1.3 appears to be missing. 6. Also, it's unclear to us what the expectation is for compliance documentation for "monitoring attributes and related maintenance activities" in R1.4 and "calibration tolerances or other equivalent parameters" in R1.5. This is fairly straightforward for relays, but not for other component types. 7. VSL for R4 - More clarity must be provided on the expectation for compliance documentation. This is a High VRF requirement, and there may only be a small number of maintenance-correctable items, hence a significant exposure to an extreme penalty. 8. There are typographical errors on the FAQ Requirements Flowchart (should

Voter	Entity	Segment	Vote	Comment
				be R4.1.1 and R4.1.2 instead of R4.4.1 and R4.4.2). 9. We have previously commented that the FAQ and Supplementary Reference documents should be made part of this standard. If that cannot be done, then more of the information in those documents needs to be included in the requirements in the standard to provide clarity. Compliance will only be measured against what is in the standard, and we need more clarity.

Response: **Thank you for your comments.**

1. **The SDT has determined that the fundamental concerns of Requirement R1, Part 1.5 and the associated changes are addressed within the PSMP definition, and that Requirement R1, Part 1.5 is not necessary; therefore, it has been removed. Requirement R4 has also been re-drafted to address various related concerns noted within comments. The associated VSL has also been revised. Please see Supplementary Reference Document, Section 8 for a discussion of this.**

2. **Requirement R4 has also been re-drafted to address various related concerns noted within comments. The associated VSL has also been revised. Please see Supplementary Reference Document, Section 8 for a discussion of this.**

3. **The SDT has provided examples of the sort of evidence that may serve to demonstrate compliance. The degree to which any single evidence type is sufficient is dependent on the completeness of the evidence itself. The Measure has been modified to clarify this point.**

4. **Table 2 has been modified to be clearer. "Taken" has been replaced with "Initiation" in consideration of your comment.**

5. **The High VSL for Requirement R1 has been revised in consideration of your comment.**

6. **The issues of "monitoring attributes" are discussed within Section 15.7 of the Supplementary Reference Document. As for Requirement R1, Part 1.5, the SDT has determined that the fundamental concerns of Requirement R1, Part 1.5 and the associated changes are addressed within the PSMP definition, and that Requirement R1, Part 1.5 is not necessary; therefore, it has been removed. Requirement R4 has also been re-drafted to address various related concerns noted within comments. The associated VSL has also been revised. Please see Supplementary Reference Document, Section 8 for a discussion of this.**

7. **Examples of compliance documentation are included within Measure M4 and discussed within various clauses of the FAQ and within Section 15.7 of the Supplementary Reference Document.**

8. **The SDT decided to eliminate the FAQ document and incorporate the FAQ's contents into the Supplementary Reference Document as appropriate. The SDT considered your comments during this activity.**

9. **The SDT decided to eliminate the FAQ document and incorporate the FAQ's contents into the Supplementary Reference Document as appropriate. The SDT believes the entities should be able to implement the standard without the Supplementary Reference. However, the SDT is also convinced that many entities may find the supporting discussion rationale etc useful particularly to assist them in implementing the standard in an efficient manner.**

Voter	Entity	Segment	Vote	Comment
Joel T Plessinger	Entergy	3	Negative	The restructured tables are generally much clearer and the SDT is to be commended on their efforts. 1. However, we believe the Alarming Point Table needs additional clarification with regard to the Maximum Maintenance Interval. If an "alarm producing device" is considered to be a device such as an SCADA RTU, individual entity intervals for such a device would differ, and there isn't necessarily a maximum interval established as there is for Protection System components. Also, if an entity's alarm producing device maintenance is performed in sections and triggered by segment or component maintenance, there would essentially be multiple maximum intervals for the alarm producing device of that entity. On that basis, we suggest the interval verbiage be revised to "When alarm producing device or system is verified, or by sections as per the monitored component/protection system specified maximum interval as applicable". Alternately, if the intention is to establish maximum intervals as simply being no longer than the individual component maintenance intervals as we suggest for inclusion above, then the verbiage should be revised to "When alarm producing component/protection system segment is verified". In either case are we to interpret monitored components with attributes which allow for no periodic maintenance specified as not requiring periodic alarm verification? 2. R1.5 calls for "identification of calibration tolerances or equivalent parameters..." whereas the associated VSL references "failure to establish calibration criteria...." and is listed as high. If R1.5 is to be included in this standard, then we suggest the severity level of a failure to simply "identify" or document such calibration tolerances would be analogous to the severity level(s) of a "failure to specify one (or the severity level should be consistent with the other elements of R1. Both cases appear to be more of a documentation issue as opposed to a failure to implement. Shouldn't a failure to implement any necessary calibration tolerance be accounted for in R4? R1.5 calls for "identification of calibration tolerances or equivalent parameters for each Protection System Component Type....". 3. We believe the Supplementary Reference document should provide additional information and examples of calibration tolerances or equivalent parameters which would be expected for the various component types. Especially for any "equivalent" parameters which would be required for compliance for a component type besides protective relays. Adding Requirement 1.5 is a significant revision and raises questions as to how broadly an accuracy or equivalent parameter requirement and associated

Voter	Entity	Segment	Vote	Comment
				documentation would need to be addressed by entities and/or will be measured for compliance. Discussion on this new requirement does not seem to be addressed anywhere in the FAQ or Supplementary Reference documents. Additionally, to the best of our knowledge, the need for such a requirement was not brought up as a concern or comment on the prior draft version of this standard, and in the context of a requirement need, we don't believe it has been attributed to or actually poses any significant reliability risk. We do not believe this requirement is justified.
Response: **Thank you for your comments.** **1. The Maximum Maintenance Interval column entry in Table 2 has been revised to state, "When alarm producing Protection System component is verified" to clarify this.** **2. The SDT has determined that the fundamental concerns of Requirement R1, Part 1.5 and the associated changes are addressed within the PSMP definition, and that Requirement R1, Part 1.5 is not necessary; therefore, it has been removed. Requirement R4 has also been re-drafted to address various related concerns noted within comments. The associated VSL has also been revised. Please see Supplementary Reference Document, Section 8 for a discussion of this.** **3. The SDT has determined that the fundamental concerns of Requirement R1, Part 1.5 and the associated changes are addressed within the PSMP definition, and that Requirement R1, Part 1.5 is not necessary; therefore, it has been removed. Requirement R4 has also been re-drafted to address various related concerns noted within comments. The associated VSL has also been revised. Please see Supplementary Reference Document, Section 8 for a discussion of this.**				
Kevin Querry	FirstEnergy Solutions	3	Negative	Please see FirstEnergy's comments submitted separately through the comment period posting.
Response: **Thank you for your comments. Please see our responses to your comments from the formal comment period.**				
Lee Schuster	Florida Power Corporation	3	Negative	Implementation Plan for PRC-005-2 1. Since R2, R3, and R4 requirements would be performed after establishment of the program documentation, an additional year should be added to all implementation dates for Requirements R2, R3, and R4 as shown below: • Maintenance on components with intervals less than one year must be completed within two years after applicable regulatory approval (within one year of completion of R1 Program Documentation). • Maintenance on components with intervals between one year and two years must be completed within three years after applicable regulatory approval (within two years of completion of R1 Program Documentation). • Maintenance on components with intervals of six years must be completed within three-, five-, and seven-year milestones after

Voter	Entity	Segment	Vote	Comment
				applicable regulatory approval (within two, four, and six years of completion of R1 Program Documentation). • Maintenance on components with intervals of twelve years must be completed within five-, nine-, and thirteen-year milestones after applicable regulatory approval (within four, eight, and twelve years of completion of R1 Program Documentation). Standard PRC-005-02 1. 2. Table 1-2: Rows 1 and 2 require different intervals for the activity "Verify essential signals to and from Protection System components." Unless these inputs and outputs are monitored for Row 2, it would seem that they should be performed at the same interval for both Rows 1 and 2. Therefore, EITHER: • Row 1 should be broken into the following three activities: • 3 months - Verify communications system is functional • 6 years - Verify channel meets performance criteria • 12 years - Verify essential signals to and from other Protection System components OR: • Row 2 should be broken into the following two activities: • 12 years - Verify channel meets performance criteria • 6 years - Verify essential signals to and from other Protection System components 3. Table 1-4: Only Row 1 addresses dc supplies associated with UFLS or UVLS systems. All other rows state that UFLS or UVLS systems are excluded. What is required to "Verify dc supply voltage" for the UFLS/UVLS systems? Does it require that the overall station battery voltage be checked or just the dc voltage available to the UFLS/UVLS circuit of interest? If a voltage measurement is taken at the UFLS/UVLS circuit (e.g., in distribution breaker cabinet), can the batteries/chargers at these facilities be excluded from the PRC-005-2 scope as long as they do not also supply transmission-related protection? 4. PRC-005-2 FAQ's Document Section V.1.A, Example #2: The instrument transformer should be classified as "unmonitored" not "monitored."

Response: **Thank you for your comments.**

1. **The Implementation Plan for Requirement R1 has been changed from 12 months to 15 months in consideration of your comment. The Implementation Plan for Requirement R4 has been revised to add one year to all established dates.**
2. **The first and second rows differ in that the first row is for unmonitored communications systems, and the second row is for monitored communications systems. The activities in both rows are appropriate and correct.**
3. **Table 1-4 has been completely re-structured. For station dc supply for only UFLS/UVLS, the only activity is to verify the dc**

Voter	Entity	Segment	Vote	Comment
voltage. 4. **The SDT decided to eliminate the FAQ document and incorporate the FAQ's contents into the Supplementary Reference Document as appropriate. The SDT considered your comments during this activity.**				
Anthony L Wilson	Georgia Power Company	3	Negative	Reference the new Requirements R.1.5 and R.4.2 which are new to this posting: R.1.5 requires the Owners to "identify calibration tolerances or other equivalent parameters for each Protection System component type" is too intrusive and divisive for what it brings to the reliability of the BES. The entire SDT needs to thoroughly discuss these new requirements and modify or delete them. Note: We have also made various requests for clarification to the FAQ and Supplemental Reference document in our Response to Comments which we are not including here.
Response: **Thank you for your comments. The SDT has determined that the fundamental concerns of Requirement R1, Part 1.5 and the associated changes are addressed within the PSMP definition, and that Requirement R1, Part 1.5 is not necessary; therefore, it has been removed. Requirement R4 has also been re-drafted to address various related concerns noted within comments. The associated VSL has also been revised. Please see Supplementary Reference Document, Section 8 for a discussion of this.**				
Michael D. Penstone	Hydro One Networks, Inc.	3	Negative	1. The added requirement R1, Part 1.5 is vague and needs clarification. It is not clear what "Identify calibration tolerances or other equivalent parameters" means and as written will be subject to different interpretations by entities and compliance enforcement personnel. The addition of this new part of Requirement R1 that requires the Owners to "identify calibration tolerances or other equivalent parameters for each Protection System component type" is onerous and contributes little to the reliability of the BES. 2. Changes introduced to the Implementation Plan since the last posting are not consistent with respect to jurisdictions where no regulatory approval is required. The previously posted implementation for Requirement R1 required entities to be 100% compliant on the first day of the first calendar quarter three months following applicable regulatory approvals, or in those jurisdictions where no regulatory approval is required, on the first day of the first calendar quarter six months following Board of Trustees adoption. The amended implementation plan changed the three-month time to twelve months in jurisdictions with regulatory approval required but left the same six-month time for the others. For consistency, the six months timeframe should be changed to fifteen months.
Response: **Thank you for your comments.** 1. **The SDT has determined that the fundamental concerns of Requirement R1, Part 1.5 and the associated changes are addressed within the PSMP definition, and that Requirement R1, Part 1.5 is not necessary; therefore, it has been removed. Requirement R4 has also been re-drafted to address various related concerns noted within comments. The associated VSL has also been revised. Please see Supplementary Reference Document, Section 8 for a discussion of this.**				

Voter	Entity	Segment	Vote	Comment
2. In consideration of your comment, "six" has been modified to "twelve" in the Implementation Plan for Requirement R1, making it consistent with the remainder of the Implementation Plan.				
Garry Baker	JEA	3	Negative	JEA will be voting no on PRC-005-2 because of the following: 1. In Table 1-1 for electromechanical trip or auxiliary devices requires verification of operation as opposed to verify ability to operate that was specified on trip coils. I believe it should be ability to operate in each case. 2. Between Table 1-1 and Tables 1-5 essentially would require full functional test of each station every 12 years.
Response: **Thank you for your comments.** **1. The distinction in Table 1-5 is correct and as intended by the SDT.** **2. A full functional test is one means of completing the required activities, but other methods are also acceptable. See Sections 8 and 15.3 of the Supplementary Reference Document for additional discussion.**				
Mace Hunter	Lakeland Electric	3	Negative	1. Table 1-4 requires a comparison of measured battery internal ohmic value to battery baseline. Since battery manufacturers do not provide this value, it is unclear what the "baseline" values ought to be if an entity recently began performing this test (assuming it's several years after the commissioning of the battery.) Would it be acceptable for an entity to establish baseline values based on statistical analysis of multiple test results specific to a given battery manufacturer and design? 2. Lakeland feels that the SDT should have taken into consideration numerous comments previously made regarding general concerns with testing Control Circuitry in energized substations. We agree that this can negatively impact reliability and would like to emphasize the following: • Small entities with only one or two BES substations may not have enough components to take advantage of the expanded maintenance intervals afforded by a performance-based maintenance program. Aggregating these components across different entities doesn't seem too logical considering the variations at the sub-component level (wire gauge, installation conditions, etc.) • Trip circuits are interconnected to perform various functions. Testing a trip path may involve disabling other features (i.e. breaker failure or reclosing) not directly a part of the test being performed. Temporary modifications made for testing introduce a chance to unknowingly leave functions disabled, contacts shorted, jumpers lifted, etc. after testing has been completed. Trip coils and cable runs from panels to breaker can be made to meet the requirements for monitored components. The only portions of the circuitry where this may not be the case is in the inter and intra-panel

Voter	Entity	Segment	Vote	Comment
				wiring. Because such portions of the circuitry have no moving parts and are located inside a control house, the exposure is negligible and should not be covered by the requirements. Entities will be at increased compliance risk as they struggle to properly document the testing of all parallel tripping paths. 3. Applicability, 4.2.1, should reflect the Y&W and Tri-State interpretation (Project 2009-17) of "transmission Protection System" and should state: "Protection Systems applied on, or designed to provide protection for a BES Facility and that trips a BES Facility" 4. Applicability, 4.2. - does not reflect the interpretation of Project 20009-10 that excludes non-electrical protection (e.g., sudden pressure relays) and auxiliary relays. Because the definition of Protection System (recently approved) does not clearly exclude "non-electrical" protection,the Applicability section should. For instance,, a vibration monitor, steam pressure, etc. protection of generators, sudden pressure protection of transformers, etc. should not be included in the standard. An alternative is to change the definition of Protection System to make sure it only includes electrical 5. the VRF of R1 should be Low since the attached tables are essentially the PSMP.

Response: **Thank you for your comments.**

1. **Typical baseline values for various types of lead-acid batteries can be obtained from the test equipment manufacturer, perhaps the battery vendor, and perhaps other sources for batteries that are already in service. For new batteries, the initial battery baseline ohmic values should be measured upon installation and used for trending.**
2. **A) Entities are not required to use performance-based maintenance programs. Requirement R3 and Attachment A are provided for the use of entities that can (and desire to) avail themselves of this approach.**

   B) The requirement relative to control circuitry does not explicitly require trip or functional testing of the entire path; it requires that entities verify all paths without specifying the method of doing so. Please see Section 15.5 of the Supplementary Reference Document for detailed discussion.
3. **This interpretation is not yet approved by FERC. When this interpretation is approved, the SDT will incorporate it within PRC-005-2. However, the SDT has made changes to Applicability 4.2.1 in consideration of your comments.**
4. **The recently-balloted revision of the definition of Protection System, which has been approved by the NERC Board of Trustees and will soon be filed with FERC for approval, clearly includes only protective relays that respond to electrical quantities. As for auxiliary relays, the interpretation to which you refer states that they are not explicitly included, but are included to the degree that an entity's Protection System control circuitry addresses them(which has been identified as a reliability gap), and are being added to PRC-005-2 to resolve the gap.**

Voter	Entity	Segment	Vote	Comment
5. The SDT disagrees; the Tables establish the intervals and activities, and R1 addresses the establishment of an entities' individual PSMP.				
Bruce Merrill	Lincoln Electric System	3	Affirmative	While the proposed draft of the standard is acceptable as currently written, LES would like the drafting team to consider the following comments. (1) Table 1-1 should state "Test and calibrate (if necessary)" in the first section under activities. If a relay passes the test, there is no need to calibrate it. Therefore, not all relays will require calibration. (2) Please explain the drafting team's reason for not checking the trip coils of breakers in the UFLS/UVLS schemes but ensuring that all others are operated every six years. It would appear that they can all be lumped into the same group one way or another. (3) In regards to Specific Gravity Testing, many people do not perform the specific gravity test routinely if they perform the individual cell internal ohmic test routinely. LES asks the drafting team to consider allowing the internal cell ohmic test as a substitute for the specific gravity test.
Response: **Thank you for your comments.** **1. Table 1-1 has been modified as you suggest.** **2. This is an intentional difference between UFLS/UVLS and the remainder of the Protection Systems addressed within the Standard, because of the distributed nature of UFLS/UVLS and because these devices are usually tripping distribution system elements.** **3. Table 1-4 does not specify specific gravity testing.**				
Charles A. Freibert	Louisville Gas and Electric Co.	3	Negative	LG&E and KU Energy LLC appreciate the hard work and efforts of the Standards Drafting Team in reaching this point in the standards development process. The basis for the negative vote is the addition of Requirement R1.5 (calibration tolerances) and R4.2 to the standard. This requirement will provide the opportunity for auditors to decide if the testing criteria for whether a relay passes a test or not is acceptable. LG&E and KU Energy recommend that Requirement R1.5 be deleted from the standard.
Response: **Thank you for your comments. The SDT has determined that the fundamental concerns of Requirement R1, Part 1.5 and the associated changes are addressed within the PSMP definition, and that Requirement R1, Part 1.5 is not necessary; therefore, it has been removed. Requirement R4 has also been re-drafted to address various related concerns noted within comments. The associated VSL has also been revised. Please see Supplementary Reference Document, Section 8 for a discussion of this.**				
Greg C. Parent	Manitoba Hydro	3	Negative	1. -Implementation Plan (Timeline) for R1: In areas not requiring regulatory approval, the 6 month time frame proposed for R1 is not achievable and is not consistent with areas requiring regulatory approval. To be consistent, the effective date for R1 in jurisdictions where no regulatory approval is required should be the first day of the first calendar quarter 12 months after BOT approval.

Voter	Entity	Segment	Vote	Comment
				2. - VSLs: The high VSL for R1 "Failed to include all maintenance activities relevant for the identified monitoring attributes specified in Tables 1-1 through 1-5" may be interpreted in different ways and should be further clarified. 3. -Table 1-4: The requirements for batteries listed in Table 1-4 do not appear to be consistent with the comments in the FAQ Section (V 1A Example 1). Please see comments submitted during the formal comment period for further detail. 4. -Table 1-4: The requirement for a 3 month check on electrolyte level seems too frequent based on our experience. We would like to point out that although IEEE std 450 (which seems to be the basis for table 1-4) does recommend intervals it also states that users should evaluate these recommendations against their own operating experience.
Response: **Thank you for your comments.** **1. In consideration of your comment, "six" has been modified to "twelve" in the Implementation Plan for Requirement R1, making it consistent with the remainder of the Implementation Plan.** **2. The SDT does not understand your concern; further details are needed.** **3. The SDT decided to eliminate the FAQ document and incorporate the FAQ's contents into the Supplementary Reference Document as appropriate. The SDT considered your comments during this activity.** **4. The SDT believes that the 3-month interval specified in the Standard is appropriate.**				
Don Horsley	Mississippi Power	3	Negative	Reference the new Requirements R.1.5 and R.4.2 which are new to this posting: R.1.5 requires the Owners to "identify calibration tolerances or other equivalent parameters for each Protection System component type" is too intrusive and divisive for what it brings to the reliability of the BES. The entire SDT needs to thoroughly discuss these new requirements and modify or delete them. Note: We have also made various requests for clarification to the FAQ and Supplemental Reference document in our Response to Comments which we are not including here.
Response: **Thank you for your comments. The SDT has determined that the fundamental concerns of Requirement R1, Part 1.5 and the associated changes are addressed within the PSMP definition, and that Requirement R1, Part 1.5 is not necessary; therefore, it has been removed. Requirement R4 has also been re-drafted to address various related concerns noted within comments. The associated VSL has also been revised. Please see Supplementary Reference Document, Section 8 for a discussion of this.**				
Michael Schiavone	Niagara Mohawk (National Grid Company)	3	Negative	This new Requirement as written subjects the Transmission Owner, Generation Owner or Distribution Provider to vague interpretations of what the requirement means by compliance officials. The addition of the new part of Requirement R1 that requires the Owners to "identify calibration tolerances or other equivalent parameters for each Protection System component type" is too intrusive and divisive for what it brings to the reliability of the BES.

Voter	Entity	Segment	Vote	Comment
Response: **Thank you for your comments. The SDT has determined that the fundamental concerns of Requirement R1, Part 1.5 and the associated changes are addressed within the PSMP definition, and that Requirement R1, Part 1.5 is not necessary; therefore, it has been removed. Requirement R4 has also been re-drafted to address various related concerns noted within comments. The associated VSL has also been revised. Please see Supplementary Reference Document, Section 8 for a discussion of this.**				
Sam Waters	Progress Energy Carolinas	3	Negative	4. Implementation Plan for PRC-005-2 Since R2, R3, and R4 requirements would be performed after establishment of the program documentation, an additional year should be added to all implementation dates for Requirements R2, R3, and R4 as shown below: • Maintenance on components with intervals less than one year must be completed within two years after applicable regulatory approval (within one year of completion of R1 Program Documentation). • Maintenance on components with intervals between one year and two years must be completed within three years after applicable regulatory approval (within two years of completion of R1 Program Documentation). • Maintenance on components with intervals of six years must be completed within three-, five-, and seven-year milestones after applicable regulatory approval (within two, four, and six years of completion of R1 Program Documentation). o Maintenance on components with intervals of twelve years must be completed within five-, nine-, and thirteen-year milestones after applicable regulatory approval (within four, eight, and twelve years of completion of R1 Program Documentation). Standard PRC-005-02 1. 5. Table 1-2: 1. Rows 1 and 2 require different intervals for the activity "Verify essential signals to and from Protection System components." Unless these inputs and outputs are monitored for Row 2, it would seem that they should be performed at the same interval for both Rows 1 and 2. Therefore, EITHER: • Row 1 should be broken into the following three activities: • 3 months - Verify communications system is functional • 6 years - Verify channel meets performance criteria • 12 years - Verify essential signals to and from other Protection System components OR: • Row 2 should be broken into the following two activities: • 12 years - Verify channel meets performance criteria • 6 years - Verify essential signals to and from other Protection System components. 6. Table 1-4: Only Row 1 addresses dc supplies associated with UFLS or UVLS systems. All other rows state that UFLS or UVLS systems are excluded. What

Voter	Entity	Segment	Vote	Comment
				is required to "Verify dc supply voltage" for the UFLS/UVLS systems? Does it require that the overall station battery voltage be checked or just the dc voltage available to the UFLS/UVLS circuit of interest? If a voltage measurement is taken at the UFLS/UVLS circuit (e.g., in distribution breaker cabinet), can the batteries/chargers at these facilities be excluded from the PRC-005-2 scope as long as they do not also supply transmission-related protection? 7. PRC-005-2 FAQ's Document Section V.1.A, Example #2: The instrument transformer should be classified as "unmonitored" not "monitored."
Response: **Thank you for your comments.** **4. The Implementation Plan for Requirement R1 has been changed from 12 months to 15 months in consideration of your comment. The Implementation Plan for Requirement R4 has been revised to add one year to all established dates.** **5. The first and second rows differ in that the first row is for unmonitored communications systems, and the second row is for monitored communications systems. The activities in both rows are appropriate and correct.** **6. Table 1-4 has been completely re-structured. For station dc supply for only UFLS/UVLS, the only activity is to verify the dc voltage.** **7. The SDT decided to eliminate the FAQ document and incorporate the FAQ's contents into the Supplementary Reference Document as appropriate. The SDT considered your comments during this activity.**				
Jeffrey Mueller	Public Service Electric and Gas Co.	3	Negative	The PSEG Companies do not agree with the Facilities as currently described in section 4.2.5.5. Please refer to detailed comments provided in our formal Comment Form.
Response: **Thank you for your comments. In response to many comments, including yours, the SDT has removed 4.2.5.5 from the Applicability of the standard.**				
Anthony Schacher	Salem Electric	3	Negative	Battery testing methodologies are too specific and don't allow for different substation battery configurations.
Response: **Thank you for your comments. The SDT disagrees; the requirements within Table 1-4 establish the minimum maintenance activities required to assure that station dc supply of various technologies and configurations will perform as intended without unnecessarily prescribing specific methodologies.**				
Dana Wheelock	Seattle City Light	3	Negative	Comment: The proposed Standard PRC-005-2 is an improvement over the previous draft in that it provides more consistency in maintenance and testing duration internals. Notwithstanding, two issues are of concern to Seattle City Light such that it is compelled to vote no: 1) the establishment of bookends for standard verification and 2) the implementation timelines for entities with systems where electro-mechanical

Voter	Entity	Segment	Vote	Comment
				relays still compose a significant number of components in their protection systems. Bookends: Proposed Standard PRC-005-2 specifies long inspection and maintenance intervals, up to 12 years, which correspondingly exacerbates the so-called "bookend" issue. To demonstrate that interval-based requirements have been met, two dates are needed - bookends. Evidencing an initial date can be problematic for cases where the initial date would occur prior to the effective date of a standard. NERC has provided no guidance on this issue, and the Regions approach it differently. Some, such as Texas Regional Entity, require initial dates beginning on or after the effective date of a Standard. Compliance with intervals is assessed only once two dates are available that occur on or after a standard took effect. Other regions, such as Western Electricity Coordinating Council (WECC), require that entities evidence an initial date prior to the effective date of a standard. For WECC, compliance with intervals is assessed as soon as a standard takes effect. Such variation makes application of standards involving bookends uncertain, arbitrary, capricious, and in the case of WECC, possibly illegal. Proposed Standard PRC-005-2 will be another such standard. Indeed this Standard will involve by far the largest number of bookends of any NERC standard - many thousands for a typical entity. Furthermore, the long inspection and maintenance intervals introduced in the draft will require entities in WECC, for instance, to evidence initial bookend dates prior to the date original PRC-005-1 took effect. For the 12-year intervals for CTs and VTs in proposed Standard PRC-005-2, many initial dates will occur prior to the 2005 Federal Power Act that authorized Mandatory Reliability Standards and even reach back before the 2003 blackout that catalyzed the effort to pass the Federal Power Act. As a result, many entities in WECC maybe at risk of being found in violation of proposed Standard PRC-005-2 immediately upon its implementation. Seattle City Light requests that NERC address the bookends issue, either within proposed Standard PRC-005-2 or in a separate, concurrent document. 2) Legacy Systems: Many entities still have legacy protection systems that rely upon electro-mechanical relays. Effective testing approaches differ between electro-mechanical and digital relay systems. Thus, although the proposed standard rightly looks to the future of digital relays by specifying testing and maintenance focused on protection systems as a whole, the proposed implementation timelines create a level of hardship for those utilities with legacy systems. In example, auxiliary relay and trip coil testing may be essential to prove the correct operation of complex, multi-function digital protection systems. However, for legacy systems with single-function

Voter	Entity	Segment	Vote	Comment
				electro-mechanical components, the considerable documentation and operational testing needed to implement and track such testing is not necessarily proportional to the relative risk posed by the equipment to the bulk electric system. Performance testing of electro-mechanical systems, particularly regarding control circuits, will require extensive disconnection and reconnection of portions of the circuits. Such activities will likely cause far more problems on restoration-to-service than they will locate and correct. As such, to assist entities in their implementation efforts, we believe provision of alternatives are necessary, such as additional implementation time through phasing and/or through technical feasibility exceptions.
Response: **Thank you for your comments.** **1. This issue has been addressed by NERC in Compliance Application Notice CAN-008 "PRC-005 R2 Pre-June 18 Evidence". Please see Sections 8 and 15.3 of the Supplementary Reference Document for a discussion on this topic.** **2. FERC Order 693 directs that NERC establish requirements for the maintenance of the Protection System and control circuitry is a portion thereof. Therefore, requirements for the maintenance of the control circuitry are necessary and the SDT has developed those requirements in a fashion that affords entities with the opportunity to best meet those requirements.**				
James R. Keller	Wisconsin Electric Power Marketing	3	Negative	Q4: Table 1-4 requires an activity to verify the state of charge of battery cells. There are no possible options for meeting this requirement listed in the FAQ document. Unlike other terms used in the standard, this term is not mentioned or defined in the FAQ. To comply with this standard, the SDT needs to provide more guidance. For example, for VLA batteries the measured specific gravity could indicate state of charge. For VRLA batteries, it is not as clear how to determine state of charge, but possibly this can be determined by monitoring the float current.
Response: **Thank you for your comments. The SDT decided to eliminate the FAQ document and incorporate the FAQ's contents into the Supplementary Reference Document as appropriate. The SDT considered your comments during this activity. Table 1-4 has been revised to remove "state of charge" from the activities.**				
Michael Ibold	Xcel Energy, Inc.	3	Negative	See comments under the Transmission segment.
Response: **Thank you for your comments. Please see our responses to your comments from the Transmission segment.**				
Kenneth Goldsmith	Alliant Energy Corp. Services, Inc.	4	Negative	We are concerned with this paragraph being interpreted differently by the various regions and thereby causing a large increase in scope for Distribution Provider protection systems beyond the reach of UFLS or UVLS. i. Protection Systems applied on, or designed to provide protection for, the BES. The description is vague and open for different interpretations for what is "applied

Voter	Entity	Segment	Vote	Comment
				on" or "designed to provide protection". According to the November 17, 2010 Draft Supplementary Reference page 4, the Standard will not apply to sub-transmission and distribution circuits, but will apply to any Protection System that is designed to detect a fault on the BES and take action in response to the fault. The Standard Drafting Team does not feel that Protection Systems designed to protect distribution substation equipment are included in the scope of this standard; however, this will be impacted by the Regional Entity interpretations of 'protecting" the BES. Most distribution protection systems will not react to a fault on the BES, but are caught up in the interpretation due to tripping a breaker(s) on the BES.
Response: **Thank you for your comments. Applicability 4.2.1 has been revised to remove "applied on". The SDT believes that this addresses your concern. Applicability 4.2.2 and 4.2.3, respectively, address UFLS and UVLS specifically, and are not related to 4.2.1. The Supplementary Reference Documentation has been revised to clarify.**				
David Frank Ronk	Consumers Energy	4	Negative	1. Table 1-3 states, "are received by the protective relays". Does this require that the inputs to each individual relay must be checked, or is it sufficient to verify that acceptable signals are received at the relay panel, etc? 2. Relative to Table 1-5, the activities will likely require that system components be removed from service to complete those activities. If the changes to the BES definition (per the FERC Order) causes system elements such as 138 kV connected distribution transformers to be considered as BES, these components can not be removed from service for maintenance without outaging customers. The standard must exempt these components from the activities of Table 1-5 if the activity would result in deenergizing customers. 3. For the component types addressed in Tables 1-3 and 1-5, the requirements may cause entities to identify components very differently than they are currently doing, and doing so may take several years to complete. The Implementation Plan for R1 and R4 is too aggressive in that it may not permit entities to complete the identification of discrete components and the associated maintenance and implement their program as currently proposed. We propose that the Implementation Plan specifically address the components in Table 1-3 and 1-5 with a minimum of 3 calendar years for R1 and 12 calendar years after that for R4. 4. As for the interval in Table 1-4 regarding the battery terminal connection resistance, we believe that an 18-month interval is excessively frequent for this

Voter	Entity	Segment	Vote	Comment
				activity, and suggest that it be moved to the 6-calendar-year interval. 5. In Table 1-4, we currently re-torque all of the battery terminal connections every 4-years, rather than measuring the terminal connection resistance to determine if the connections are sound. Disregarding the interval, would this activity satisfy the "verify the battery terminal connection resistance" activity?
Response: **Thank you for your comments.** 1. **The SDT intends that the voltage and current signals properly reach each individual relay, but there may be several methods of accomplishing this activity.** 2. **This concern seems more properly to be one to be addressed during the activities to develop the new BES definition, rather than within PRC-005-2.** 3. **The Implementation Plan for Requirement R1 has been modified from "six" months to "twelve" months. The standard has also been modified (Requirement R1, Part 1.1) to not specifically require identification of all Individual Protection System components. The Implementation Plan for Requirement R4 has been revised to add one year to all established dates.** 4. **IEEE 450, 1188, and 1106 all recommend this activity at a 12-month interval. Please see Clause 15.4.1 of the Supplementary Reference Document for a discussion of this activity.** 5. **Re-torqueing the battery terminals would not meeting this requirement.**				
Frank Gaffney	Florida Municipal Power Agency	4	Negative	1. UFLS and UVLS maintenance and testing is greatly expanded, e.g., we interpreted PRC-008/011 as being only the UFLS/UVLS equipment. The new PRC-005 sweeps in other protection system components, e.g., communications (probably not applicable), voltage and current sensing devices (e.g., instrument transformers), Station DC supply, control circuitry. What's key about this is that these components are all part of distribution system protection, so, these activities would not be covered by other BES protection system maintenance and testing. I'm sure we are testing batteries and the like, but, we are probably not testing battery chargers and control circuity, and, in many cases distribution circuits are such that it is very difficult, if not impossible, to test control circuitry to the trip coil of the breaker without causing an outage of the customers on that distribution circuit. There is no real reliability need for this either. Unlike Transmission and Generation Protection Systems which are needed to clear a fault and may only have one or two back-up systems, there are thousands and thousands of UFLS relays and if one fails to operate, it will not be noticeable to the event. It does make sense to test the relays themselves in part to

Voter	Entity	Segment	Vote	Comment
				ensure that the regionsl UFLS program is being met, but, to test the other protection system components is not worthwhile. Note that DC Supplies and most of the control circuitry of distribution lines are "tested" frequently by distribution circuits clearing faults such as animals, vegetation blow-ins, lightning, etc., on distribution circuits, reducing the value of testing to just about null. However, this version is better than prior versions because it essentially requires the entity to determine it's own period of maintenance and testing for UFLS/UVLS for DC Supply and control circuitry. 2. Applicability, 4.2.1, should reflect the Y&W and Tri-State interpretation (Project 2009-17) of "transmission Protection System" and should state: "Protection Systems applied on, or designed to provide protection for a BES Facility and that trips a BES Facility" 3. Applicability, 4.2. - does not reflect the interpretation of Project 20009-10 that excludes non-electrical protection (e.g., sudden pressure relays) and auxiliary relays. Because the definition of Protection System (recently approved) does not clearly exclude "non-electrical" protection,the Applicability section should. For instance,, a vibration monitor, steam pressure, etc. protection of generators, sudden pressure protection of transformers, etc. should not be included in the standard. An alternative is to change the definition of Protection System to make sure it only includes electrical the VRF of R1 should be Low since the attached tables are essentially the PSMP.

Response: **Thank you for your comments.**

1. **For UFLS and UVLS, the maintenance activities related to station dc supply and control circuitry are somewhat constrained relative to similar activities for Protection Systems in general. Regardless, without proper functioning of these component types, UFLS and UVLS will not respond as expected, and will therefore degrade BES system reliability, particularly during the stressed system conditions for which UFLS and UVLS are installed. Relative to control circuitry, Table 1-5 specifically excludes UFLS and UVLS from maintenance activities related to the interrupting device trip coil.**
2. **This interpretation is not yet approved by FERC. When this interpretation is approved, the SDT will incorporate it within PRC-005-2. However, the SDT has made changes to Applicability 4.2.1 in consideration of your comments.**
3. **The recently-balloted revision of the definition of Protection System, which has been approved by the NERC Board of Trustees and will soon be filed with FERC for approval, clearly includes only protective relays that respond to electrical quantities. As for auxiliary relays, the interpretation to which you refer states that they are not explicitly included, but are included to the degree that an entity's Protection System control circuitry addresses them(which has been identified as a reliability gap), and are being added to PRC-005-2 to resolve the gap.**

Voter	Entity	Segment	Vote	Comment
Thomas W. Richards	Fort Pierce Utilities Authority	4	Negative	1. UFLS and UVLS maintenance and testing is greatly expanded, e.g., we interpreted PRC-008/011 as being only the UFLS/UVLS equipment. The new PRC-005 sweeps in other protection system components, e.g., communications (probably not applicable), voltage and current sensing devices (e.g., instrument transformers), Station DC supply, control circuitry. What's key about this is that these components are all part of distribution system protection, so, these activities would not be covered by other BES protection system maintenance and testing. I'm sure we are testing batteries and the like, but, we are probably not testing battery chargers and control circuitry, and, in many cases distribution circuits are such that it is very difficult, if not impossible, to test control circuitry to the trip coil of the breaker without causing an outage of the customers on that distribution circuit. There is no real reliability need for this either. Unlike Transmission and Generation Protection Systems which are needed to clear a fault and may only have one or two back-up systems, there are thousands and thousands of UFLS relays and if one fails to operate, it will not be noticeable to the event. It does make sense to test the relays themselves in part to ensure that the regio0nsl UFLS program is being met, but, to test the other protection system components is not worthwhile. Note that DC Supplies and most of the control circuitry of distribution lines are "tested" frequently by distribution circuits clearing faults such as animals, vegetation blow-ins, lightning, etc., on distribution circuits, reducing the value of testing to just about null. However, this version is better than prior versions because it essentially requires the entity to determine it's own period of maintenance and testing for UFLS/UVLS for DC Supply and control circuitry. 2. Applicability, 4.2.1, should reflect the Y&W and Tri-State interpretation (Project 2009-17) of "transmission Protection System" and should state: "Protection Systems applied on, or designed to provide protection for a BES Facility and that trips a BES Facility" 3. Applicability, 4.2. - does not reflect the interpretation of Project 2009-10 that excludes non-electrical protection (e.g., sudden pressure relays) and auxiliary relays. Because the definition of Protection System (recently approved) does not clearly exclude "non-electrical" protection, the Applicability section should. For instance, a vibration monitor, steam pressure, etc. protection of generators, sudden pressure protection of transformers, etc. should not be included in the standard. An alternative is to change the definition of Protection System to make sure it only includes electrical 4. Table 1-4 requires a comparison of measured battery internal ohmic value to battery baseline. Battery manufacturers typically do not provide this value

Voter	Entity	Segment	Vote	Comment
				and one manufacturer states that the baseline test are to be performed after the battery has been in regular float service for 90 days. It is unclear how to comply with the requirement for the initial 90 days. Additionally, we would recommend that this requirement be modified to permit an entity to establish a "baseline" value based on statistical analysis of multiple test results specific to a given battery manufacturer/model. Several commenters previously expressed their concerns with performing capacity tests. While this may just be an entity's preference, allowing an entity to establish a baseline at some point beyond the initial installation period would give entities the option of using the internal resistance test in lieu of a capacity test. 5. Small entities with only one or two BES substations may not have enough components to take advantage of the expanded maintenance intervals afforded by a performance-based maintenance program. Aggregating these components across different entities doesn't seem too logical considering the variations at the sub-component level (wire gauge, installation conditions, etc.) 6. Trip circuits are interconnected to perform various functions. Testing a trip path may involve disabling other features (i.e. breaker failure or reclosing) not directly a part of the test being performed. Temporary modifications made for testing introduce a chance to accidentally leave functions disabled, contacts shorted, jumpers lifted, etc. after testing has been completed. Trip coils and cable runs from panels to breaker can be made to meet the requirements for monitored components. The only portions of the circuitry where this may not be the case is in the inter- and intra-panel wiring. Because such portions of the circuitry have no moving parts and are located inside a control house, the exposure is negligible and should not be covered by the requirements. Entities will be at increased compliance risk as they struggle to properly document the testing of all parallel tripping paths. The interconnected nature of tripping circuits will make it difficult to count the number of circuits consistently for the purpose of calculating a VSL.

Response: **Thank you for your comments.**

1. **For UFLS and UVLS, the maintenance activities related to station dc supply and control circuitry are somewhat constrained relative to similar activities for Protection Systems in general. Regardless, without proper functioning of these component types, UFLS and UVLS will not respond as expected, and will therefore degrade BES system reliability, particularly during the stressed system conditions for which UFLS and UVLS are installed. Relative to control circuitry, Table 1-5 specifically excludes UFLS and UVLS from maintenance activities related to the interrupting device trip coil.**
2. **This interpretation is not yet approved by FERC. When this interpretation is approved, the SDT will incorporate it within PRC-005-2. However, the SDT has made changes to Applicability 4.2.1 in consideration of your comments.**

Voter	Entity	Segment	Vote	Comment
3. The recently-balloted revision of the definition of Protection System, which has been approved by the NERC Board of Trustees and will soon be filed with FERC for approval, clearly includes only protective relays that respond to electrical quantities. As for auxiliary relays, the interpretation to which you refer states that they are not explicitly included, but are included to the degree that an entity's Protection System control circuitry addresses them(which has been identified as a reliability gap), and are being added to PRC-005-2 to resolve the gap. **4. Typical baseline values for various types of lead-acid batteries can be obtained from the test equipment manufacturer, perhaps the battery vendor, and perhaps other sources for batteries that are already in service. For new batteries, the initial battery baseline ohmic values should be measured upon installation and used for trending.** **5. Entities are not required to use performance-based maintenance programs. Requirement R3 and Attachment A are provided for the use of entities that can (and desire to) avail themselves of this approach.** **6. The requirement relative to control circuitry does not explicitly require trip or functional testing of the entire path; it requires that entities verify all paths without specifying the method of doing so. Please see Section 15.5 of the Supplementary Reference Document for detailed discussion.**				
Bob C. Thomas	Illinois Municipal Electric Agency	4	Negative	It is IMEA's understanding from interaction with other entities that Draft 3 provides significant improvement, but that key concerns raised by many entities on Draft 2 were not addressed. IMEA supports comments submitted by Florida Municipal Power Agency.
Response: **Thank you for your comments. Please see our responses to your comments submitted during the Formal Comment period..**				
Christopher Plante	Integrys Energy Group, Inc.	4	Negative	Reason for No Vote: 1. Implementation plan is too aggressive given the drastic changes from PRC-005-1 to PRC-005-2 2. The drastic changes don't appear to provide an incremental increase in the reliability of the BES 3. We support the MRO NSRS comments
Response: **Thank you for your comments.** **1. The SDT has carefully considered the changes that entities will be expected to make to their program in response to PRC-005-2 and provided an Implementation Plan that should be sufficient and provided a phase-in approach to permit entities to systemically implement the revised standard. The Implementation Plan for Requirement R4 has been revised to add one year to all established dates.** **2. FERC Order 693 and the approved SAR assign the SDT to develop a standard with maximum allowable intervals and minimum maintenance activities. The intervals and activities specified are believed by the SDT to be technically effective, in a fashion that benefits reliability and that may be consistently monitored for compliance.** **3. Please see our responses to MRO's NSRS comments on the Standard Comments.**				
Joseph G. DePoorter	Madison Gas and Electric Co.	4	Negative	The SDT has made great improvements with this Standard but please consider the following items. 1. Replace "affecting" with "protecting" in the purpose statement.

Voter	Entity	Segment	Vote	Comment
				2. 4.2.1 under Facilities, The description is vague and open for different interpretations for what is “applied on” or “designed to provide protection”. According to the November 17, 2010 Draft Supplementary Reference page 4, the Standard will not apply to sub-transmission and distribution circuits, but will apply to any Protection System that is designed to detect a fault on the BES and take action in response to the fault. The Standard Drafting Team does not feel that Protection Systems designed to protect distribution substation equipment are included in the scope of this standard; however, this will be impacted by the Regional Entity interpretations of ‘protecting” the BES. Most distribution protection systems will not react to a fault on the BES, but are caught up in the interpretation due to tripping a breaker(s) on the BES. Clarification is needed by the SDT that this does not include distribution assets (notwithstanding UFLS and UVLS). 3. Upon review, R1.4, R1.5, and R4.2 were added since the last posting. These are not needed and must of been added to the Standard from an outside sorce. The SDT was on the proper track to finalize this Standard. These requirements need to be left to the individual entities to determine the depth and breath of thier PMSP.
Response: **Thank you for your comments.** **1. The “Purpose” is defined by the SAR.** **2. Applicability 4.2.1 has been revised to remove “applied on”. The SDT believes that this addresses your concern. Applicability 4.2.2 and 4.2.3, respectively, address UFLS and UVLS specifically, and are not related to Applicability 4.2.1. The Supplementary Reference Documentation has been revised to clarify.** **3. The SDT has determined that the fundamental concerns of Requirement R1, Part 1.5 and the associated changes are addressed within the PSMP definition, and that Requirement R1, Part 1.5 is not necessary; therefore, it has been removed. Requirement R4 has also been re-drafted to address various related concerns noted within comments. The associated VSL has also been revised. Please see Supplementary Reference Document, Section 8 for a discussion of this.**				
Douglas Hohlbaugh	Ohio Edison Company	4	Negative	Please see FirstEnergy's comments submitted separately through the comment period posting.
Response: **Thank you for your comments. Please see our responses to your comments submitted during the Formal Comment period.**				
John D. Martinsen	Public Utility District No. 1 of Snohomish	4	Affirmative	The overly prescriptive nature of the PRC-005-2 provides greater implementation clarity. However it may be too onerous for Local Network that have demonstrated through studies that delayed clearing (that could be attributed to protection

Voter	Entity	Segment	Vote	Comment
	County			system maintenance and testing) events do not create reliability or cascading concerns.
Response: **Thank you for your comments. PRC-005-2 is applicable to Protection Systems that are designed to provide protection for BES elements, and uses the Compliance Registry to determine applicable entities. Contributions of BES elements to cascading, etc, are immaterial in this Applicability.**				
Hao Li	Seattle City Light	4	Negative	Comment: The proposed Standard PRC-005-2 is an improvement over the previous draft in that it provides more consistency in maintenance and testing duration internals. Notwithstanding, two issues are of concern to Seattle City Light such that it is compelled to vote no: 1) the establishment of bookends for standard verification and 2) the implementation timelines for entities with systems where electro-mechanical relays still compose a significant number of components in their protection systems. Bookends: Proposed Standard PRC-005-2 specifies long inspection and maintenance intervals, up to 12 years, which correspondingly exacerbates the so-called "bookend" issue. To demonstrate that interval-based requirements have been met, two dates are needed - bookends. Evidencing an initial date can be problematic for cases where the initial date would occur prior to the effective date of a standard. NERC has provided no guidance on this issue, and the Regions approach it differently. Some, such as Texas Regional Entity, require initial dates beginning on or after the effective date of a Standard. Compliance with intervals is assessed only once two dates are available that occur on or after a standard took effect. Other regions, such as Western Electricity Coordinating Council (WECC), require that entities evidence an initial date prior to the effective date of a standard. For WECC, compliance with intervals is assessed as soon as a standard takes effect. Such variation makes application of standards involving bookends uncertain, arbitrary, capricious, and in the case of WECC, possibly illegal. Proposed Standard PRC-005-2 will be another such standard. Indeed this Standard will involve by far the largest number of bookends of any NERC standard - many thousands for a typical entity. Furthermore, the long inspection and maintenance intervals introduced in the draft will require entities in WECC, for instance, to evidence initial bookend dates prior to the date original PRC-005-1 took effect. For the 12-year intervals for CTs and VTs in proposed Standard PRC-005-2, many initial dates will occur prior to the 2005 Federal Power Act that authorized Mandatory Reliability Standards and even reach back before the 2003 blackout that catalyzed the effort to pass the Federal Power Act. As a result, many entities in WECC maybe at

Voter	Entity	Segment	Vote	Comment
				risk of being found in violation of proposed Standard PRC-005-2 immediately upon its implementation. Seattle City Light requests that NERC address the bookends issue, either within proposed Standard PRC-005-2 or in a separate, concurrent document. 2) Legacy Systems: Many entities still have legacy protection systems that rely upon electro-mechanical relays. Effective testing approaches differ between electro-mechanical and digital relay systems. Thus, although the proposed standard rightly looks to the future of digital relays by specifying testing and maintenance focused on protection systems as a whole, the proposed implementation timelines create a level of hardship for those utilities with legacy systems. In example, auxiliary relay and trip coil testing may be essential to prove the correct operation of complex, multi-function digital protection systems. However, for legacy systems with single-function electro-mechanical components, the considerable documentation and operational testing needed to implement and track such testing is not necessarily proportional to the relative risk posed by the equipment to the bulk electric system. Performance testing of electro-mechanical systems, particularly regarding control circuits, will require extensive disconnection and reconnection of portions of the circuits. Such activities will likely cause far more problems on restoration-to-service than they will locate and correct. As such, to assist entities in their implementation efforts, we believe provision of alternatives are necessary, such as additional implementation time through phasing and/or through technical feasibility exceptions.
Response: **Thank you for your comments.** **1. This issue has been addressed by NERC in Compliance Application Notice CAN-008 "PRC-005 R2 Pre-June 18 Evidence". Please see Sections 8 and 15.3 of the Supplementary Reference Document for a discussion on this topic.** **2. FERC Order 693 directs that NERC establish requirements for the maintenance of the Protection System and control circuitry is a portion thereof. Therefore, requirements for the maintenance of the control circuitry are necessary and the SDT has developed those requirements in a fashion that affords entities with the opportunity to best meet those requirements.**				
James A Ziebarth	Y-W Electric Association, Inc.	4	Negative	Y-WEA appreciates the significant amount of work that the SDT has put into this revision of the standard. It is clear that the SDT is making a sincere effort to address comments and concerns from previous revisions of this standard, and that is a good thing. While Y-WEA thanks the SDT for the straightforward honesty of disagreeing with our previous comments on the battery testing interval of 3 months for VRLA batteries, we still feel that this mandatory maximum testing interval is unreasonably short, based on IEEE 1188-2005.

Voter	Entity	Segment	Vote	Comment
				The recommended testing intervals contained in that IEEE standard should be targeted as reasonable testing intervals, with some degree of leeway allowed before any mandatory maximum interval is defined. A mandatory maximum interval of four calendar months would be much more appropriate here. This would allow a reasonable testing and maintenance program to define a standard testing interval of three months (in line with the IEEE standard) and still be able to allow a one month buffer or grace period to account for unexpected delays in testing due to extreme storms or other unanticipated heavy workloads. With the draft standard as written, a company must use an unreasonably short preferred maintenance interval if any grace period is to be built in and still remain under the mandatory maximum interval of the NERC standard. In particular, this could have a substantial impact on small companies that are distributed over a large area but have limited resources to deal with such stringent testing requirements. Because this standard will ultimately have to comply with the Regulatory Flexibility Act, it would be worthwhile for the SDT to consider the potential impacts of essentially forcing entities into much more stringent testing programs than recommended by current technically-derived and peer reviewed and approved standards such as IEEE 1188-2005. Other than that, Y-WEA sincerely appreciates the clarity that has been added to this standard over that contained in previous versions of the testing and maintenance standards. This will give registered entities much more guidance as to what NERC's and the regional entities' expectations are when it comes to protection system testing and maintenance programs.
Response: **Thank you for your comments. The SDT has revised the 3-month interval specified for VRLA batteries for some activities to 6 months.**				
Francis J. Halpin	Bonneville Power Administration	5	Negative	Please see BPA's comments submitted seperately
Response: **Thank you for your comments. Please see our responses to your comments submitted during the Formal Comment period.**				
Wilket (Jack) Ng	Consolidated Edison Co. of New York	5	Negative	The Tables – 1. The wording “Component Type” is not necessary in each title. Just the equipment category should be listed--what is now shown as “Component Type - Protective Relay”, should be Protective Relay. However, Protective Relay is too general a category. Electromechanical relays, solid state relays, and microprocessor based relays should have their own separate tables. So instead of reading Protective Relay in the title, it should read

Voter	Entity	Segment	Vote	Comment
				Electromechanical Relays, etc. This will lengthen the standard, but will simplify reading and referring to the tables, and eliminate confusion when looking for information. 2. The “Note” included in the heading is also not necessary. “Attributes” is also not necessary in the column heading, “Component” suffices. Other Comments - In general, the standard is overly prescriptive and complex. It should not be necessary for a standard at this level to be as detailed and complex as this standard is. Entities working with manufacturers, and knowledge gained from experience can develop adequate maintenance and testing programs. 3. Why are “Relays that respond to non-electrical inputs or impulses (such as, but not limited to, vibration, pressure, seismic, thermal or gas accumulation)…” not included? The output contacts from these devices are oftentimes connected in tripping or control circuits to isolate problem equipment. 4. Due to the critical nature of the trip coil, it must be maintained more frequently if it is not monitored. Trip coils are also considered in the standard as being part of the control circuitry. Table 1-5 has a row labeled “Unmonitored Control circuitry associated with protective functions”, which would include trip coils, has a “Maximum Maintenance Interval” of “12 Calendar Years”. Any control circuit could fail at any time, but an unmonitored control circuit could fail, and remain undetected for years with the times specified in the Table (it might only be 6 years if I understand that as being the trip test interval specified in the table). Regardless, if a breaker is unable to trip because of control circuit failure, then the system must be operated in real time assuming that that breaker will not trip for a fault or an event, and backup facilities would be called upon to operate. Thus, for a line fault with a “stuck” breaker (a breaker unable to trip), instead of one line tripping, you might have many more lines deloaded or tripped because of a bus having to be cleared because of a breaker failure initiation. The bulk electric system would have to be operated to handle this contingency. 5. In reference to the FAQ document, Section 5 on Station dc Supply, Question K, clarification is needed with respect to dc supplies for communication within the substation. For example, if the communication systems were run off a separate battery in separate area in a substation, would the standard apply to these batteries or not? 6. To define terms only as they are used in PRC-005-2 is inviting confusion. Although they may be unique to PRC-005-2, some or all of them may be

Voter	Entity	Segment	Vote	Comment
				used in future standards, some already may be used in existing standards, and may or may not be deliberately defined. Consistency must be maintained, not only for administrative purposes, but for effective technical communications as well. 7. What is the definition of "Maintenance" as used in the table column "Maximum Maintenance Interval"? Maintenance can range from cleaning a relay cover to a full calibration of a relay. 8. A control circuit is not a component, it is made up of components. 9. Sub-requirement 1.5 needs to be clarified. It is not clear what "Identify calibration tolerances or other equivalent parameters…" means, and may be subject to different interpretations by entities and compliance enforcement personnel. 10. In the Implementation plan for Requirement R1, recommend changing "six" to fifteen. This change would restore the 3-month time difference that existed in the previous draft, between the durations of the implementation periods for jurisdictions that do and do not require regulatory approval. It will ensure equity for those entities located in jurisdictions that do not require regulatory approval, as is the case in Ontario. 11. The 'box' for "Monitored Station dc supply…" in Table 1-4 is not clear. It seems to continue to the next page to a new box. There are multiple activities without clear delineation. 12. Regarding station service transformers, Item 4.2.5.5 under Applicability should be deleted. The purpose of this standard is to protect the BES by clearing generator, generator bus faults (or other electrical anomalies associated with the generator) from the BES. Having this standard apply to generator station service transformers, that have no direct connection to the BES, does meet this criteria. The FAQs (III.2.A) discuss how the loss of a station service transformer could cause the loss of a generating unit, but this is not the purpose of PRC-005. Using this logic than any system or device in the power plant that could cause a loss of generation should also be included. This is beyond the scope of the NERC standards.

Response: **Thank you for your comments.**

1. **The SDT believes that the table headings are appropriate as reflected in the draft standard.**

2. **The intervals and activities specified are believed by the SDT to be technically effective, in a fashion that may be consistently monitored for compliance. Further, FERC Order 693 directs NERC to establish maximum allowable intervals, which implies that minimum activities also need to be prescribed. If an entities' experience is that components require less-frequent maintenance, a performance-based program in accordance with R3 and Attachment A is an option.**

Voter	Entity	Segment	Vote	Comment
				3. The SDT concentrated their efforts on protective relays which use the entire group of component types within the Protection System definition. Also, there is currently no technical basis for the maintenance of the devices which respond to non-electrical quantities on which to base mandatory standards related either to activities or intervals. Absent such a technical basis, we are currently unable to establish mandatory requirements, but may do so in the future if such a technical basis becomes available. **4. According to Table 1-5, trip coils of interrupting devices must be verified to operate every 6 years, rather than the 12-year interval. You can maintain these devices more frequently if you desire.** **5. With respect to dc supply associated only with communication systems, we prescribe, within Table 1-2, that the communications system must be verified as functional every 3 months, unless the functionality is verified by monitoring. The specific station dc supply requirements (Table 1-4) do not apply to the dc supply associated only with communications systems. The SDT has decided to eliminate the FAQ and incorporate topics and discussion from the FAQ within the Supplementary Reference document. Your comments have been considered within that activity.** **6. The SDT has proposed these terms for use only within PRC-005-2 because we are concerned that other uses of these terms, either now or in the future, may not be consistent with the terms used here. They are defined only for clarify within this standard.** **7. As used in the "Maximum Maintenance Interval" column title of the table, maintenance refers to whatever activities are specified in the Activities column. The term is capitalized in the column title in conformance with normal editorial practice as a title, rather than as a definition.** **8. For purposes of this standard, the control circuit is defined as one component type.** **9. The SDT has determined that the fundamental concerns of Requirement R1, Part 1.5 and the associated changes are addressed within the PSMP definition, and that Requirement R1, Part 1.5 is not necessary; therefore, it has been removed. Requirement R4 has also been re-drafted to address various related concerns noted within comments. The associated VSL has also been revised. Please see Supplementary Reference Document, Section 8 for a discussion of this.** **10. In consideration of your comment, "six" has been modified to "twelve" in the Implementation Plan for Requirement R1,making it consistent with the remainder of the Implementation Plan.** **11. Table 1-4 has been further modified for clarity.** **12. In response to many comments, including yours, the SDT has removed 4.2.5.5 from the Applicability of the standard.**
Amir Y Hammad	Constellation Power Source Generation, Inc.	5	Negative	Constellation Power Generation is voting against this standard for the following reasons: 1. The applicability has included more generation protective components. The current PRC-005 guidance states that only Station Service transformers for plants 75 MVA and up should be included. The proposed

Voter	Entity	Segment	Vote	Comment
				standard includes all station service transformers, regardless of plant size or connection (via generator or system). Constellation Power Generation does not see the reliability benefits of this increased scope. 2. R1.4 states that all monitoring attributes of all components must be listed and identified. For most generation facilities, it is more efficient to calibrate/check the entire protective system while the plant is in an outage, regardless of a component's monitoring capabilities. This requirement would require those facilities to maintain a list of attributes that won't ever be used, and would not alter their testing frequency. What if an entity were found non-compliant in the situation that was just described? It does not affect the reliability of the BES and therefore R1.4 should be removed. 3. M1 doesn't include a measure for R1.4. It just implies that a facility must maintain a list. 4. The battery listing in the attached table is still too prescriptive. If unmonitored, there should be a quarterly and yearly check, which is implied, but it is then broken out by battery type to be more prescriptive. 5. PTs and CTs are mentioned, but it seems as though the drafting team wants a facility to only test the outputs to ensure they are working properly. To clarify this, Constellation Power Generation suggests rewording the testing verbiage for PTs and CTs.
Response: **1. Section 4.2.5 of "Applicability" specifies that only Generation Facilities that are part of the BES are included.** **2. The SDT disagrees; Requirement R1, Part 1.4 supports Requirement R1, Part 1.2, and seems necessary to assure that entities have appropriately applied the longer intervals associated with monitored components. However, in consideration to your comment the SDT has revised Requirement R1, Part 1.4 and has also removed Requirement R2 because of redundancy to Requirement R1, Part 1.4.** **3. Measure M1 has been revised in consideration of your comment.** **4. The activities for different battery types are addressed separately because the relevant activities differ.** **5. The SDT intends that the instrument transformer and associated circuitry be verified to be functional, but believes that customary apparatus maintenance (dielectric, infrared, etc) are not relevant to PRC-005-2.**				
James B Lewis	Consumers Energy	5	Negative	1. Table 1-3 states, "are received by the protective relays". Does this require that the inputs to each individual relay must be checked, or is it sufficient to verify that acceptable signals are received at the relay panel, etc? 2. Relative to Table 1-5, the activities will likely require that system components be removed from service to complete those activities. If the changes to the BES definition (per the FERC Order) causes system elements such as 138 kV connected distribution transformers to be considered as BES, these components can not be removed from service for maintenance without tripping customers. The standard

Voter	Entity	Segment	Vote	Comment
				must exempt these components from the activities of Table 1-5 if the activity would result in deenergizing customers. 3. For the component types addressed in Tables 1-3 and 1-5, the requirements may cause entities to identify components very differently than they are currently doing, and doing so may take several years to complete. The Implementation Plan for R1 and R4 is too aggressive in that it may not permit entities to complete the identification of discrete components and the associated maintenance and implement their program as currently proposed. We propose that the Implementation Plan specifically address the components in Table 1-3 and 1-5 with a minimum of 3 calendar years for R1 and 12 calendar years after that for R4. 4. As for the interval in Table 1-4 regarding the battery terminal connection resistance, we believe that an 18-month interval is excessively frequent for this activity, and suggest that it be moved to the 6-calendar-year interval. 5. In Table 1-4, we currently re-torque all of the battery terminal connections every 4-years, rather than measuring the terminal connection resistance to determine if the connections are sound. Disregarding the interval, would this activity satisfy the "verify the battery terminal connection resistance" activity?
Response: **Thank you for your comments.** **1. The SDT intends that the voltage and current signals properly reach each individual relay, but there may be several methods of accomplishing this activity.** **2. This concern seems more properly to be one to be addressed during the activities to develop the new BES definition, rather than within PRC-005-2.** **3. The Implementation Plan for Requirement R1 has been modified from 6 months to 12 months. The Standard has also been modified (Requirement R1, Part 1.1) to not specifically require identification of all individual Protection System components. The Implementation Plan for Requirement R4 has been revised to add one year to all established dates.** **4. IEEE 450, 1188, 1106 all recommend this activity at a 12-month interval. Please see Clause 15.4.1 of the Supplementary Reference Document for a discussion of this activity.** **5. Re-torqueing the battery terminals would not meet this requirement.**				
Mike Garton	Dominion Resources, Inc.	5	Negative	Dominion is opposed to this version because Requirement R1.5 is overly prescriptive, requiring an extraordinary level of documentation, with little anticipated improvement in reliability.
Response: **Thank you for your comments. The SDT has determined that the fundamental concerns of Requirement R1, Part 1.5 and the associated changes are addressed within the PSMP definition, and that Requirement R1, Part 1.5 is not necessary; therefore, it has been removed. Requirement R4 has also been re-drafted to address various related concerns noted within comments. The associated VSL has also been revised. Please see Supplementary Reference Document, Section 8 for a discussion of this.**				

Voter	Entity	Segment	Vote	Comment
Stanley M Jaskot	Entergy Corporation	5	Negative	The restructured tables are generally much clearer and the SDT is to be commended on their efforts. 1. However, we believe the Alarming Point Table needs additional clarification with regard to the Maximum Maintenance Interval. If an "alarm producing device" is considered to be a device such as an SCADA RTU, individual entity intervals for such a device would differ, and there isn't necessarily a maximum interval established as there is for Protection System components. Also, if an entity's alarm producing device maintenance is performed in sections and triggered by segment or component maintenance, there would essentially be multiple maximum intervals for the alarm producing device of that entity. On that basis, we suggest the interval verbiage be revised to "When alarm producing device or system is verified, or by sections as per the monitored component/protection system specified maximum interval as applicable". Alternately, if the intention is to establish maximum intervals as simply being no longer than the individual component maintenance intervals as we suggest for inclusion above, then the verbiage should be revised to "When alarm producing component/protection system segment is verified". In either case are we to interpret monitored components with attributes which allow for no periodic maintenance specified as not requiring periodic alarm verification? 2. R1.5 calls for "identification of calibration tolerances or equivalent parameters..." whereas the associated VSL references "failure to establish calibration criteria...." and is listed as high. If R1.5 is to be included in this standard, then we suggest the severity level of a failure to simply "identify" or document such calibration tolerances would be analogous to the severity level(s) of a "failure to specify one (or the severity level should be consistent with the other elements of R1. Both cases appear to be more of a documentation issue as opposed to a failure to implement. Shouldn't a failure to implement any necessary calibration tolerance be accounted for in R4? 3. R1.5 calls for "identification of calibration tolerances or equivalent parameters for each Protection System Component Type....". We believe the Supplementary Reference document should provide additional information and examples of calibration tolerances or equivalent parameters which would be expected for the various component types. Especially for any "equivalent" parameters which would be required for compliance for a component type besides protective relays. Adding Requirement 1.5 is a significant revision and raises questions as to how

Voter	Entity	Segment	Vote	Comment
				broadly an accuracy or equivalent parameter requirement and associated documentation would need to be addressed by entities and/or will be measured for compliance. Discussion on this new requirement does not seem to be addressed anywhere in the FAQ or Supplementary Reference documents. Additionally, to the best of our knowledge, the need for such a requirement was not brought up as a concern or comment on the prior draft version of this standard, and in the context of a requirement need, we don't believe it has been attributed to or actually poses any significant reliability risk. We do not believe this requirement is justified.
Response: **Thank you for your comments.** **1. The Maximum Maintenance Interval column entry in Table 2 has been revised to state, "When alarm producing Protection System component is verified" to clarify this.** **2. The SDT has determined that the fundamental concerns of Requirement R1, Part 1.5 and the associated changes are addressed within the PSMP definition, and that Requirement R1, Part 1.5 is not necessary; therefore, it has been removed. Requirement R4 has also been re-drafted to address various related concerns noted within comments. The associated VSL has also been revised. Please see Supplementary Reference Document, Section 8 for a discussion of this.** **3. The SDT has determined that the fundamental concerns of Requirement R1, Part 1.5 and the associated changes are addressed within the PSMP definition, and that Requirement R1, Part 1.5 is not necessary; therefore, it has been removed. Requirement R4 has also been re-drafted to address various related concerns noted within comments. The associated VSL has also been revised. Please see Supplementary Reference Document, Section 8 for a discussion of this.**				
Kenneth Dresner	FirstEnergy Solutions	5	Negative	Please see FirstEnergy's comments submitted separately through the comment period posting
Response: **Thank you for your comments. Please see our responses to your comments submitted during the formal comment period.**				
David Schumann	Florida Municipal Power Agency	5	Negative	1. UFLS and UVLS maintenance and testing is greatly expanded, e.g., we interpreted PRC-008/011 as being only the UFLS/UVLS equipment. The new PRC-005 sweeps in other protection system components, e.g., communications (probably not applicable), voltage and current sensing devices (e.g., instrument transformers), Station DC supply, control circuitry. What's key about this is that these components are all part of distribution system protection, so, these activities would not be covered by other BES protection system maintenance and testing. I'm sure we are testing batteries and the like, but, we are probably not testing battery chargers and control circuity, and, in many cases distribution circuits are such that it is very difficult, if not impossible, to test control circuitry to the trip coil of the breaker without causing an outage of the customers on that distribution circuit. There is no real reliability need for this either.

Voter	Entity	Segment	Vote	Comment
				Unlike Transmission and Generation Protection Systems which are needed to clear a fault and may only have one or two back-up systems, there are thousands and thousands of UFLS relays and if one fails to operate, it will not be noticeable to the event. It does make sense to test the relays themselves in part to ensure that the regio0nsl UFLS program is being met, but, to test the other protection system components is not worthwhile. Note that DC Supplies and most of the control circuitry of distribution lines are "tested" frequently by distribution circuits clearing faults such as animals, vegetation blow-ins, lightning, etc., on distribution circuits, reducing the value of testing to just about null. However, this version is better than prior versions because it essentially requires the entity to determine it's own period of maintenance and testing for UFLS/UVLS for DC Supply and control circuitry. 2. Applicability, 4.2.1, should reflect the Y&W and Tri-State interpretation (Project 2009-17) of "transmission Protection System" and should state: "Protection Systems applied on, or designed to provide protection for a BES Facility and that trips a BES Facility" 3. Applicability, 4.2. - does not reflect the interpretation of Project 20009-10 that excludes non-electrical protection (e.g., sudden pressure relays) and auxiliary relays. Because the definition of Protection System (recently approved) does not clearly exclude "non-electrical" protection,the Applicability section should. For instance,, a vibration monitor, steam pressure, etc. protection of generators, sudden pressure protection of transformers, etc. should not be included in the standard. An alternative is to change the definition of Protection System to make sure it only includes electrical the VRF of R1 should be Low since the attached tables are essentially the PSMP.

Response: **Thank you for your comments.**

1. **For UFLS and UVLS, the maintenance activities related to station dc supply and control circuitry are somewhat constrained relative to similar activities for Protection Systems in general. Regardless, without proper functioning of these component types, UFLS and UVLS will not respond as expected, and will therefore degrade BES system reliability, particularly during the stressed system conditions for which UFLS and UVLS are installed. Relative to control circuitry, Table 1-5 specifically excludes UFLS and UVLS from maintenance activities related to the interrupting device trip coil.**
2. **This interpretation is not yet approved by FERC. When this interpretation is approved, the SDT will incorporate it within PRC-005-2. However, the SDT has made modifications to Applicability 4.2.1.**
3. **The recently-balloted revision of the definition of Protection System, which has been approved by the NERC Board of Trustees and will soon be filed with FERC for approval, clearly includes only protective relays that respond to electrical quantities. As for auxiliary relays, the interpretation to which you refer states that they are not explicitly included, but are included to the**

Voter	Entity	Segment	Vote	Comment
degree that an entity's Protection System control circuitry addresses them(which has been identified as a reliability gap), and are being added to PRC-005-2 to resolve the gap.				
Rex A Roehl	Indeck Energy Services, Inc.	5	Negative	The level of detail for every conceivable component of every conceivable protective system does not relate to improving reliability. For some protective systems on some equipment, following these requirements, which is undoubtedly already done, will result in good reliability, but probably not improve reliability. Applying those same requirements to the thousands, if not millions, of other protective systems with generate significant costs, generate significant numbers of violations and not have any significant impact on reliability. The costs of this type of program cannot be justified unless there is an NRC mandate or a pass through to ratepayers. Most of the industry will take the cost of this program directly from the bottom line. For minimal reliability improvement, that is not appropriate under the FPA Section 215.
Response: **Thank you for your comments. FERC Order 693 and the approved SAR assign the SDT to develop a standard with maximum allowable intervals and minimum maintenance activities. The intervals and activities specified are believed by the SDT to be technically effective, in a fashion that benefits reliability and that may be consistently monitored for compliance.**				
Dennis Florom	Lincoln Electric System	5	Affirmative	While the proposed draft of the standard is acceptable as currently written, LES would like the drafting team to consider the following comments. (1) Table 1-1 should state "Test and calibrate (if necessary)" in the first section under activities. If a relay passes the test, there is no need to calibrate it. Therefore, not all relays will require calibration. (2) Please explain the drafting team's reason for not checking the trip coils of breakers in the UFLS/UVLS schemes but ensuring that all others are operated every six years. It would appear that they can all be lumped into the same group one way or another. (3) In regards to Specific Gravity Testing, many people do not perform the specific gravity test routinely if they perform the individual cell internal ohmic test routinely. LES asks the drafting team to consider allowing the internal cell ohmic test as a substitute for the specific gravity test.
Response: **Thank you for your comments.** 1. **Table 1-1 has been modified as you suggest.** 2. **This is an intentional difference between UFLS/UVLS and the remainder of the Protection Systems addressed within the Standard, because of the distributed nature of UFLS/UVLS and because these devices are usually tripping distribution system elements.** 3. **Table 1-4 does not specify specific gravity testing.**				
Mike Laney	Luminant Generation	5	Negative	Luminant commends the PRC-005-2 Standard Drafting Team for its quality efforts in producing this version of the Standard however; Luminant must cast a negative

Voter	Entity	Segment	Vote	Comment
	Company LLC			ballot vote for this present version of the Standard. The negative vote against the present version of PRC-005-2 is solely based on the addition of Requirement R1 Part 1.5 with its associated reference to it in Requirement R4 Part 4.2 and the VSL table. It is Luminant's opinion that this new Requirement as written subjects all Transmission Owners, Generation Owners and Distribution Providers to vague interpretations of a requirement that cannot be complied with because it is impossible for any of them to draft the necessary documentation to be compliant with the Standard. As stated in the High VSL associated with Part 1.5 of Requirement R1 all owners will fail "to establish calibration tolerance or equivalent parameters to determine if every individual discrete piece of equipment in a Protection System is within acceptable parameters." It is Luminant's opinion that the measurement of acceptable performance during maintenance and testing activities can be accomplished with a Pass/Fail type of documentation on a test form. No company can effectively establish calibration tolerance parameters for an entire "component type" of the Protection System. Doing so could be detrimental to the reliability of the grid. Parameters are dependent on the location, application and situation specific to each Protection System device. The inclusion of Part 1.5 of Requirement R1 is a significant addition to the standard, and by NERC Rules of Procedure requires the input and consideration of the full Standard Drafting Team.
Response: **Thank you for your comments. The SDT has determined that the fundamental concerns of Requirement R1, Part 1.5 and the associated changes are addressed within the PSMP definition, and that Requirement R1, Part 1.5 is not necessary; therefore, it has been removed. Requirement R4 has also been re-drafted to address various related concerns noted within comments. The associated VSL has also been revised. Please see Supplementary Reference Document, Section 8 for a discussion of this.**				
Wayne Lewis	Progress Energy Carolinas	5	Negative	1. Implementation Plan for PRC-005-2 Since R2, R3, and R4 requirements would be performed after establishment of the program documentation, an additional year should be added to all implementation dates for Requirements R2, R3, and R4 as shown below: • Maintenance on components with intervals less than one year must be completed within two years after applicable regulatory approval (within one year of completion of R1 Program Documentation). • Maintenance on components with intervals between one year and two years must be completed within three years after applicable regulatory approval (within two years of completion of R1 Program

Voter	Entity	Segment	Vote	Comment
				Documentation). • Maintenance on components with intervals of six years must be completed within three-, five-, and seven-year milestones after applicable regulatory approval (within two, four, and six years of completion of R1 Program Documentation). • Maintenance on components with intervals of twelve years must be completed within five-, nine-, and thirteen-year milestones after applicable regulatory approval (within four, eight, and twelve years of completion of R1 Program Documentation). 2. Standard PRC-005-02 1. Table 1-2: Rows 1 and 2 require different intervals for the activity "Verify essential signals to and from Protection System components." Unless these inputs and outputs are monitored for Row 2, it would seem that they should be performed at the same interval for both Rows 1 and 2. Therefore, EITHER: 1. Row 1 should be broken into the following three activities: • 3 months - Verify communications system is functional • 6 years - Verify channel meets performance criteria • 12 years - Verify essential signals to and from other Protection System components OR: 2. Row 2 should be broken into the following two activities: 1. 12 years - Verify channel meets performance criteria 2. 6 years - Verify essential signals to and from other Protection System components 2. 3. Table 1-4: Only Row 1 addresses dc supplies associated with UFLS or UVLS systems. All other rows state that UFLS or UVLS systems are excluded. What is required to "Verify dc supply voltage" for the UFLS/UVLS systems? Does it require that the overall station battery voltage be checked or just the dc voltage available to the UFLS/UVLS circuit of interest? If a voltage measurement is taken at the UFLS/UVLS circuit (e.g., in distribution breaker cabinet), can the batteries/chargers at these facilities be excluded from the PRC-005-2 scope as long as they do not also supply transmission-related protection? 4. PRC-005-2 FAQ's Document Section V.1.A, Example #2: The instrument transformer should be classified as "unmonitored" not "monitored."
Response: **Thank you for your comments.** **1. The Implementation Plan for Requirement R1 has been changed from 12 months to 15 months in consideration of your comment. The Implementation Plan for Requirement R4 has been revised to add one year to all established dates.** **2. The first and second rows differ in that the first row is for unmonitored communications systems, and the second row is for monitored communications systems. The activities in both rows are appropriate and correct.**				

Voter	Entity	Segment	Vote	Comment
3. Table 1-4 has been completely re-structured. For station dc supply for only UFLS/UVLS, the only activity is to verify the dc voltage. **4. The SDT decided to eliminate the FAQ document and incorporate the FAQ's contents into the Supplementary Reference Document as appropriate. The SDT considered your comments during this activity.**				
Jerzy A Slusarz	PSEG Power LLC	5	Negative	The PSEG Companies do not agree with the Facilities as currently described in section 4.2.5.5. Please refer to detailed comments provided in the formal Comment Form.
Response: **Thank you for your comments. Please see our response to your detailed comments from the formal comment period.**				
Steven Grega	Public Utility District No. 1 of Lewis County	5	Negative	Do not like the word "all" in the proposed standard. Does all components mean each piece of wire is included? Engineers are conservative in their protection system designs and have redundant relays and protection paths. Even with half the relays out of service, protection is normally retained. Would want to have 80% a compliance level with a year to test & maintenance any component testing founded to be non-compliant. This proposed standard will ensure many more violations.
Response: **Thank you for your comments. The approved PRC-005-1 already requires that entities have a program to maintain their Protection System and implement that program. This already implies, "all", therefore PRC-005-2 should not have the impact suggested by your comment.**				
Michael J. Haynes	Seattle City Light	5	Negative	The proposed Standard PRC-005-2 is an improvement over the previous draft in that it provides more consistency in maintenance and testing duration internals. Notwithstanding, two issues are of concern to Seattle City Light such that it is compelled to vote no: 1. the establishment of bookends for standard verification and 2) the implementation timelines for entities with systems where electro-mechanical relays still compose a significant number of components in their protection systems. Bookends: Proposed Standard PRC-005-2 specifies long inspection and maintenance intervals, up to 12 years, which correspondingly exacerbates the so-called "bookend" issue. To demonstrate that interval-based requirements have been met, two dates are needed - bookends. Evidencing an initial date can be problematic for cases where the initial date would occur prior to the effective date of a standard. NERC has provided no guidance on this issue, and the Regions approach it differently. Some, such as Texas Regional Entity, require initial dates beginning on or after the effective date of a Standard. Compliance with intervals is assessed only once two dates are available that occur on or after a standard took effect. Other regions, such as Western Electricity Coordinating Council (WECC), require

Voter	Entity	Segment	Vote	Comment
				that entities evidence an initial date prior to the effective date of a standard. For WECC, compliance with intervals is assessed as soon as a standard takes effect. Such variation makes application of standards involving bookends uncertain, arbitrary, capricious, and in the case of WECC, possibly illegal. Proposed Standard PRC-005-2 will be another such standard. Indeed this Standard will involve by far the largest number of bookends of any NERC standard - many thousands for a typical entity. Furthermore, the long inspection and maintenance intervals introduced in the draft will require entities in WECC, for instance, to evidence initial bookend dates prior to the date original PRC-005-1 took effect. For the 12-year intervals for CTs and VTs in proposed Standard PRC-005-2, many initial dates will occur prior to the 2005 Federal Power Act that authorized Mandatory Reliability Standards and even reach back before the 2003 blackout that catalyzed the effort to pass the Federal Power Act. As a result, many entities in WECC maybe at risk of being found in violation of proposed Standard PRC-005-2 immediately upon its implementation. Seattle City Light requests that NERC address the bookends issue, either within proposed Standard PRC-005-2 or in a separate, concurrent document. 2. Legacy Systems: Many entities still have legacy protection systems that rely upon electro-mechanical relays. Effective testing approaches differ between electro-mechanical and digital relay systems. Thus, although the proposed standard rightly looks to the future of digital relays by specifying testing and maintenance focused on protection systems as a whole, the proposed implementation timelines create a level of hardship for those utilities with legacy systems. In example, auxilary relay and trip coil testing may be essential to prove the correct operation of complex, multi-function digital protection systems. However, for legacy systems with single-function electro-mechnical compenents, the considerable documentation and operational testing needed to implement and track such testing is not necessarily proporational to the relative risk posed by the equipment to the bulk electric system. Performance testing of electro-mechanical systems, particularly regarding control circuits, will require extensive disconnection and reconnection of portions of the circuits. Such activities will likely cause far more problems on restoration-to-service than they will locate and correct. As such, to assist entities in their implementation efforts, we believe provision of alternatives are necessary, such as additional implementation time through phasing and/or through technical feasability exceptions.

Voter	Entity	Segment	Vote	Comment
Response: **Thank you for your comments.** **1. This issue has been addressed by NERC in Compliance Application Notice CAN-008 "PRC-005 R2 Pre-June 18 Evidence".** **2. Please see Sections 8 and 15.3 of the Supplementary Reference Document for a discussion on this topic. FERC Order 693 directs that NERC establish requirements for the maintenance of the Protection System and control circuitry is a portion thereof. Therefore, requirements for the maintenance of the control circuitry are necessary and the SDT has developed those requirements in a fashion that affords entities with the opportunity to best meet those requirements.**				
William D Shultz	Southern Company Generation	5	Negative	Please see comments submitted via the electronic comment form.
Response: **Thank you for your comments. Please see our responses to your comments from the formal comment period.**				
George T. Ballew	Tennessee Valley Authority	5	Negative	Project 2007-17 Protection System Maintenance for Standard PRC-005-2 Draft - NERC is recommending significant changes to this sizeable standard and only allowing minimum comment period. While this is a good standard that has clearly taken many hours to develop, we are primarily voting NO because of the hurried fashion it is being commented, voted, and reviewed. Official comments to the document were entered on the NERC Portal.
Response: **Thank you for your comments. Please see our responses to your comments from the formal comment period.**				
Melissa Kurtz	U.S. Army Corps of Engineers	5	Negative	Paragraph 4.2.5.4 - The standard should be changed to require station service transformers only if they will cause a loss of the generator tied to the BES. Also recommend a definition of station service - we have station service that if lost would not negatively effect the BES.
Response: **Thank you for your comments. Clause 4.2.5.5 has been removed. Generator-connected station service transformers are essential to the continuing operation of the generation plant; therefore, protection on these system components is included within PRC-005-2 if the generation plant is a BES facility.**				
Martin Bauer P.E.	U.S. Bureau of Reclamation	5	Negative	1.The tables rely on a reference document which is not a part of the standard and as such may be altered without due process. Either the relevant text from the reference needs to be inserted into the standard or the reference itself incorporated into the standard. 2.The supplemental reference provides significant clarity to the intent of standard; however, in doing so, it reveals conflicts and ambiguity in the text of the standard. It is suggested that some of the clarifying language be inserted

Voter	Entity	Segment	Vote	Comment
				into the text of the standard. 3.The concept of including definitions in this standard that are not a part of the Glossary of Terms will create a conflict with other standards that choose to use the term with a different meaning. This practice should be disallowed. If a definition is be introduced it should be added to the Glossary of Terms. This concept was not provided to industry for comment when the modifications to the Definition of Protection System was introduced. Additional related to this practice are included later on. 4. The Term "Protective Relays" is overly broad as it is not limited to those devices which are used to protect the BES. In the reference provided to the standard, the SDT defined "Protective Relays" as "These relays are defined as the devices that receive the input signal from the current and voltage sensing devices and are used to isolate a faulted portion of the BES. " The Definition for "Protective Relays' as well as the components associated with the them should be associated with the protection of the BES in the definition. 5. The Section 2.4 of the attached reference and the recent FERC NOPR are in conflict with the definition of "Protective Relays" which include lockout relays and transfer trip relays "The relays to which this standard applies are those relays that use measurements of voltage, current, frequency and/or phase angle and provide a trip output to trip coils, dc control circuitry or associated communications equipment. 6. This Draft 2: April3: November 17, 2010 Page 5 definition extends to IEEE device # 86 (lockout relay) and IEEE device # 94 (tripping or trip-free relay) as these devices are tripping relays that respond to the trip signal of the protective relay that processed the signals from the current and voltage sensing devices." The definition should be revised to reflect that is really intended. The SDT as created an implied definition by specifically defining DC circuits associated with the trip function of a "Protective Relay" but failing to specifically define voltage and current sensing circuits providing inputs to "Protective Relays". The team clearly intended the circuits to be included but the definition does not since it only refers the the "voltage and current sensing devices". 7.Starting with the Definitions and continuing through the end of the document, terms that have been defined are not capitalized. This leaves it ambiguous as to whether the defined term is to be applied or it is a generic reference. Only defined terms "Protection System Maintenance Program" and "Protection System" are consistently capitalized. 8. Protection System Maintenance Program (PSMP) definition: The Restore bullet should be revised to read as follows: "Return malfunctioning components to

Voter	Entity	Segment	Vote	Comment
				proper operation by repair or calibration during performance of the initial on-site activity." Add the following at the end of the PSMP definition: “NOTE: Repair or replacement of malfunctioning Components that require follow-up action fall outside of the PSMP, and are considered Maintenance Correctable Issues.” 9.Protection System (modification) definition: The term "protective functions" that is used herein should be changed to "protective relay functions" or what is meant by the phrase should become a defined term, as it is being used as if it is a well known well defined, and agreed upon term. a. The first bullet text should be revised to read as follows: "Protective relays that monitor BES electrical quantities and respond when those quantities exceed established parameters," the last two bullets should be reversed in order and modified to read as follows: o control circuitry associated with protective relay functions through the trip coil(s) of the circuit breakers or other interrupting devices, and o station dc supply (including station batteries, battery chargers, and non-battery-based dc supply) associated with the preceding four bullets. 10. Statement between the Protection System (modification) definition and the Maintenance Correctable Issue definition; Is this a NERC accepted practice? There does not appear to be a location in the standard for defining terms. Having terms that are not contained in the "Glossary of Terms used in NERC Reliability Standards," and are outside of the terms of the standards, and yet are necessary to understand the terms of the Requirements is not acceptable. They would become similar to the reference documents, and could be changed without notice. 11. Maintenance Correctable Issue definition: The last sentence should be modified to read as follows: "Therefore this issue requires follow-up corrective action which is outside the scope of the Protection System Maintenance Program and the Standard PRC-005-2 defined Maximum Maintenance Intervals." The definition could also be easily clarified to read "Maintenance Correctable Issue - Failure of a component to operate within design parameters such that it cannot be restored to functional order by repair or calibration; therefore requires replacement." This ensures that any action to restore the equipment, short of replacement, is still considered maintenance. Otherwise ambiguity is introduced as what "maintenance" is. 12. Countable Event definition: An explanation should be made that this is a part of the technical justification for the ongoing use of a performance-based Protection System Maintenance Program for PRC-005. 13. Insert the phrase "Standard PRC-005-2" before the term "Tables 1-1..."

Voter	Entity	Segment	Vote	Comment
				14. Applicability: 4.2. Facilities: 4.2.5.4 and 4.2.5.5: Delete these two parts of the applicability. Station service transformer protection systems are not designed to provide protection for the BES. Per PRC-005-2 Protection System Maintenance Draft Supplementary Reference, Nov. 17 2010, Section 2.3 - Applicability of New Protection System Maintenance Standards: "The BES purpose is to transfer bulk power. The applicability language has been changed from the original PRC-005: "...affecting the reliability of the Bulk Electric System (BES)..." To the present language: "... and that are applied on, or are designed to provide protection for the BES." The drafting team intends that this Standard will not apply to "merely possible" parallel paths, (sub-transmission and distribution circuits), but rather the standard applies to any Protection System that is designed to detect a fault on the BES and take action in response to that fault." Station Service transformer protection is designed to detect a fault on equipment internal to a powerplant and not directly related to the BES. In addition, many Station Service protection ensures fail over to a second source in case of a problem. Thus station service transformer protection system is a powerplant reliability issue and not a BES reliability issue. As such station service transformer protection should not be included in PRC 005 2. In addition, the SDT appears to have targeted generation station service without regard to transmission systems. If generating station service transformers are that important, then why are substation/switchyard station service transformers not also important? 15. Requirements Should the sub requirements have the "R" prefix? 16. R4. Change the phrase "... PSMP, including identification of the resolution of all ..." to read "...PSMP including identification, but not the resolution, of all ...". 17.General comment PRC005-2 is very specific in listing the

Response: **Thank you for your comments.**

1. **The Tables do not provide a reference to either the Supplementary Reference Document or the FAQ. An entity must comply with the standard when approved. The reference documents provide additional explanation, discussion, and rationale, but are not part of the mandatory standard. Since the reference documents are developed in accordance with the standard and will be posted with the standard, the NERC Standard Development Procedure does require that they undergo industry review before being initially posted, and upon any revision.**

2. **The clarifying language is exactly that – clarifying language, and is not essential to application of the Standard. He NERC Standards Development Procedure establishes that the standard shall not include explanatory text.**

3. **If the terms were placed in the Glossary of Terms, the SDT is concerned that some future SDT, in order to utilize these terms, may change them in a fashion inconsistent with the intended usage within PRC-005-2.**

Voter	Entity	Segment	Vote	Comment
				4. "Protective relay" is defined by IEEE, and the SDT sees no need to either change the definition or to repeat the definition with PRC-005. Further, the applicability of generically-described protective relays is defined by the Applicability clause of PRC-005-2. 5. The issues raised by the FERC NOPR will be addressed as part of the response to the NOPR (and, ultimately, the Order). The extension of auxiliary and lockout relays is not part of the protective relay (addressed within Table 1-1), but instead as part of the control circuitry (Table 1-5). 6. The extension of auxiliary and lockout relays is not part of the protective relay (addressed within Table 1-1), but instead as part of the control circuitry (Table 1-5). 7. Definition from the NERC Glossary of Terms (or those intended for the Glossary) are consistently capitalized (Protection System and Protection System Maintenance Program fall within this category). As for terms defined only for use within this standard, these terms are NOT capitalized, since they are not in the Glossary of Terms. 8. The "restore" portion of PSMP specifically addresses returning malfunctioning components to your proper operation. The requirements regarding maintenance correctable issues are further addressed within that definition (for use only within PRC-005-2). 9. The SDT is currently not planning on further modifying the most recent NERC BOT-approved definition of Protection System. 10. If the terms were placed in the Glossary of Terms, the SDT is concerned that some future SDT, in order to utilize these terms, may change them in a fashion inconsistent with the intended usage within PRC-005-2. 11. Identifying problems, but not fixing them, does not constitute an effective program. In deference to the time that may be necessary to repair / replace defective components, the SDT has decided to require only initiation of resolution of maintenance correctable issues, not to demonstration completion of them. 12. Since this term is used only in Attachment A, it seems unnecessary to provide the explanation requested. 13. The SDT has elected not to change the reference to the Tables throughout the Standard. 14. Thank you for your comments. Clause 4.2.5.5 has been removed. Generator-connected station service transformers are essential to the continuing operation of the generation plant; therefore, protection on these system components is included within PRC-005-2 if the generation plant is a BES facility. 15. The current style guide for NERC Standards does not preface the Parts with an "R". 16. Identifying problems, but not fixing them, does not constitute an effective program. In deference to the time that may be

Voter	Entity	Segment	Vote	Comment
necessary to repair / replace defective components, the SDT has decided to require only initiation of resolution of maintenance correctable issues, not to demonstration completion of them. **17. It appears the remainder of your comment was truncated and cannot be ascertained.**				
Linda Horn	Wisconsin Electric Power Co.	5	Negative	Q4: Table 1-4 requires an activity to verify the state of charge of battery cells. There are no possible options for meeting this requirement listed in the FAQ document. Unlike other terms used in the standard, this term is not mentioned or defined in the FAQ. To comply with this standard, the SDT needs to provide more guidance. For example, for VLA batteries the measured specific gravity could indicate state of charge. For VRLA batteries, it is not as clear how to determine state of charge, but possibly this can be determined by monitoring the float current.
Response: **Thank you for your comments. The SDT decided to eliminate the FAQ document and incorporate the FAQ's contents into the Supplementary Reference Document as appropriate. The SDT considered your comments during this activity. Table 1-4 has been revised to remove "state of charge" from the activities.**				
Leonard Rentmeester	Wisconsin Public Service Corp.	5	Negative	1. Implementation plan is too aggressive given the drastic changes from PRC-005-1 to PRC-005-2 2. The drastic changes don't appear to provide an incremental increase in the reliability of the BES 3. We support the MRO NSRS comments
Response: **Thank you for your comments.** **1. The SDT has carefully considered the changes that entities will be expected to make to their program in response to PRC-005-2 and provided an Implementation Plan that should be sufficient and provided a phase-in approach to permit entities to systemically implement the revised standard. The Implementation Plan for Requirement R4 has been revised to add one year to all established dates.** **2. FERC Order 693 and the approved SAR assign the SDT to develop a standard with maximum allowable intervals and minimum maintenance activities. The intervals and activities specified are believed by the SDT to be technically effective, in a fashion that benefits reliability and that may be consistently monitored for compliance.** **3. Please see our responses to MRO's NSRS formal comments in the Consideration of Comments document.**				
Liam Noailles	Xcel Energy, Inc.	5	Negative	We feel that several improvements were made since the last draft. However, we feel that some gaps exist that should be addressed before moving this project forward. We have detailed our issues in our formal comments
Response: **Thank you for your comments. Please see our response to your formal comments.**				
Edward P. Cox	AEP Marketing	6	Negative	Restructured Tables: 1. Table 1.5 (Control Circuitry), row 4, indicates a maximum interval of 12 years for unmonitored control circuitry, yet other portions of control circuitry have a

Voter	Entity	Segment	Vote	Comment
				maximum interval of 6 years. AEP does not understand the rationale for the difference in intervals, when in most cases, one verifies the other. Also, unmonitored control circuitry is capitalized in row 4 such that it infers a defined term. 2. In the first row of table 1-4 on page 16, it is difficult to determine if it is a cell that wraps from the previous page or is a unique row. This is important because the Maximum Maintenance Intervals are different (i.e. 18 months vs 6 years). It is difficult to determine to which elements the 6 year Maximum Maintenance Interval applies. AEP suggests repeating the heading "Monitored Station dc supply (excluding UFLS and UVLS) with: Monitor and alarm for variations from defined levels (See Table 2):" for the bullet points on this page. VSLs, VRFs and Time Horizons: 3. The VSL table should be revised to remove the reference to the Standard Requirement 1.5 in the R1 "High" VSL. 4. All four levels of the VSL for R2 make reference to a "condition-based PSMP." However, nowhere in the standard is the term "condition-based" used in reference to defining ones PSMP. The VSL for R2 should be revised to remove reference to a condition-based PSMP; alternatively the Standard could be revised to include the term "condition-based" within the Standard Requirements and Table 1. 5. In multiple instances, Table 1 uses the phrase "No periodic maintenance specified" for the Maximum Maintenance Interval. Is this intended to imply that a component with the designated attributes is not required to have any periodic maintenance? If so, the wording should more clearly state "No periodic maintenance required" or perhaps "Maintain per manufacturers recommendations." Failure to clearly state the maintenance requirement for these components leaves room for interpretation on whether a Registered Entity has a maintenance and testing program for devices where the Standard has not specified a periodic maintenance interval and the manufacturer states that no maintenance is required. FAQ and Supplementary Reference: 6. With such a complex standard as this, the FAQ and Supplementary Reference documents do aid the Protection System owner in demystifying the requirements. But AEP holds strong doubt on how much weight the documents carry during audits. It would be better to include them as an appendix in the actual standard, but in a more compact version with the following modifications: a. Section 5 of the Supplementary Reference, refers to "condition-based"

Voter	Entity	Segment	Vote	Comment
				maintenance programs. However, nowhere in the standard is the term "condition-based" used in reference to defining ones PSMP. The Supplementary Reference should be revised to remove reference to a condition-based PSMP; alternatively the Standard could be revised to include the term "condition-based" within the Standard Requirements and Table 1. b. Section 15.7, page 26, appears to have a typographical error "...can all be used as the primary action is the maintenance activity..." c. Figure 2 is difficult to read. The figure is grainy and the colors representing the groups are similar enough that it is hard to distinguish between groups. "Frequently-Asked Questions": 7. With such a complex standard as this, the FAQ and Supplementary Reference documents do aid the Protection System owner in demystifying the requirements. But AEP holds strong doubt on how much weight the documents carry during audits. It would be better to include them as an appendix in the actual standard, but in a more compact version with the following modifications: a. The section "Terms Used in PRC-005-2" is blank and should be removed as it adds no value. Section I.1 and Section IV.3.G reference "condition-based" maintenance programs. However, nowhere in the standard is the term "condition-based" used in reference to defining ones PSMP. b. The FAQ should be revised to remove reference to a condition-based PSMP; alternatively the Standard could be revised to include the term "condition-based" within the Standard Requirements and Table 1. c. The second sentence to the response in Section I.1 appears to have a typographical error "... an entity needs to and perform ONLY time-based...". General: 8. Standards Requirement 1.5 and the reference to R1.5 in Requirement 4.2 should be removed. Specifying calibration tolerances for every protection system component type, while a seemingly good idea, represents a substantial change in the direction of the standard. It would be very onerous for companies to maintain a list of calibration tolerances for every protection system component type and show evidence of such at an audit. AEP believes entities need the flexibility to determine what acceptance criteria is warranted and need discretion to apply real-time engineering/technician judgment where appropriate.

Voter	Entity	Segment	Vote	Comment
				9. Three different types of maintenance programs (time-based, performance-based and condition-based) are referenced in the standard or VSLs, yet the time-based and condition-based programs are neither defined nor described. Certain terms defined within the definition section (such as Countable Event or Segment) only make sense knowing what those three programs entail. These programs should be described within the standard itself and not assume a knowledge of material in the Supplementary Reference or FAQ. 10. "Protective relay" should be a defined term that lists relay function for applicability. There are numerous 'relays' used in protection and control schemes that could be lumped in and be erroneously included as part of a Protection System. For example, reclosing or synchronizing relays respond to voltage and hence could be viewed by an auditor as protective relays, but they in fact perform traditional control functions versus traditional protective functions. 11. The Data Retention requirement of keeping maintenance records for the two most recent maintenance performances is a significant hurdle for any owners to abide by during the initial implementation period. The implementation plan needs to account for this such that Registered Entities do not have to provide retroactive testing information that was not explicitly required in the past.

Response: **Thank you for your comments.**

1. **The 6-year activities are all related to components with "moving parts", and the 12-year activities are related to the other portions of the control circuitry. The capitalized term has been corrected.**
2. **Table 1-4 has been modified in consideration of your comments.**
3. **The SDT has determined that the fundamental concerns of Requirement R1, Part 1.5 and the associated changes are addressed within the PSMP definition, and that Requirement R1, Part 1.5 is not necessary; therefore, it has been removed. The associated VSL has also been revised.**
4. **The SDT concluded that Requirement R2 is redundant to Requirement R1, Part 1.4 and has deleted Requirement R2 (together with the Measures and & VSL).**
5. **If the indicated monitoring attributes are present, no "hands-on" periodic maintenance is required, as the monitoring of the component is providing a continuing indication of its functionality.**
6. **The discussion within the Supplementary Reference Document and FAQ are informative, not normative, and thus do not belong as part of the standard.**
   a) **The Supplementary Reference Document discusses condition-based maintenance in a conceptual manner, as a generally-recognized term. The SDT did make some changes within the Supplementary Reference document to clarify the manner in which condition-based maintenance is discussed.**

Voter	Entity	Segment	Vote	Comment
b) This clause has been corrected. **c) A higher-quality version of Figure 2 has been substituted.** **7. The discussion within the Supplementary Reference Document and FAQ are informative, not normative, and thus do not belong as part of the standard.** **a) The SDT decided to eliminate the FAQ document and incorporate the FAQ's contents into the Supplementary Reference Document as appropriate. The SDT considered your comments during this activity.** **b) The SDT decided to eliminate the FAQ document and incorporate the FAQ's contents into the Supplementary Reference Document as appropriate. The SDT considered your comments during this activity.** **c) The SDT decided to eliminate the FAQ document and incorporate the FAQ's contents into the Supplementary Reference Document as appropriate. The SDT considered your comments during this activity.** **8. The SDT has determined that the fundamental concerns of Requirement R1, Part 1.5 and the associated changes are addressed within the PSMP definition, and that Requirement R1, Part 1.5 is not necessary; therefore, it has been removed. Requirement R4 has also been re-drafted to address various related concerns noted within comments. The associated VSL has also been revised. Please see Supplementary Reference Document, Section 8 for a discussion of this.** **9. The term, "condition-based" has been removed from the draft standard. The other terms are used, but are clear in the context in which they are used.** **10. "Protective relay" is defined by IEEE, and the SDT sees no need to either change the definition or to repeat the definition with PRC-005. Further, the applicability of generically-described protective relays is defined by the Applicability clause of PRC-005-2.** **11. In order that a Compliance Monitor can be assured of compliance, the SDT believes that the Compliance Monitor will need the data of the most recent performance of the maintenance, as well as the data of the preceding one to validate that entities have been in compliance since the last audit (or currently, since the beginning of mandatory compliance). The SDT has specified the data retention in the posted standard to establish this level of documentation. This seems to be consistent with the current practices of several Regional Entities.**				
Brenda S. Anderson	Bonneville Power Administration	6	Negative	Refer to BPA comments
Response: **Thank you for your comments. Please see our response to the BPA comments.**				
Matthew D Cripps	Cleco Power LLC	6	Negative	Cleco applies its' UFLS on the distribution grid with each UF relay individually tripping a relatively low value of load thru breakers and reclosers. Since our program is implemented via a large number of individual components, breakers, reclosers, and individual batteries, the failure of any one component will have a minimal impact on the effectiveness of the overall UFLS program within our region. Therefore, the verification of sensing devices, dc supply voltages, and the

Voter	Entity	Segment	Vote	Comment
				paths of the control circuit and trip circuits on the UFLS systems implemented on the distribution grid is unnecessary.
Response: **Thank you for your comments. The SDT disagrees; the sensing devices, control circuitry and dc supply related to UFLS has an effect on the performance of the UFLS. The SDT has, however, respected the overall impact on the control circuitry of individual UFLS on BES reliability by requiring that UFLS be subjected to a subset of the overall sensing devices, control circuitry and dc supply maintenance activities.**				
Nickesha P Carrol	Consolidated Edison Co. of New York	6	Negative	The Tables 1. The wording "Component Type" is not necessary in each title. Just the equipment category should be listed--what is now shown as "Component Type - Protective Relay", should be Protective Relay. However, Protective Relay is too general a category. Electromechanical relays, solid state relays, and microprocessor based relays should have their own separate tables. So instead of reading Protective Relay in the title, it should read Electromechanical Relays, etc. This will lengthen the standard, but will simplify reading and referring to the tables, and eliminate confusion when looking for information. The "Note" included in the heading is also not necessary. 2. "Attributes" is also not necessary in the column heading, "Component" suffices. Other Comments – 3. In general, the standard is overly prescriptive and complex. It should not be necessary for a standard at this level to be as detailed and complex as this standard is. Entities working with manufacturers, and knowledge gained from experience can develop adequate maintenance and testing programs. 4. Why are "Relays that respond to non-electrical inputs or impulses (such as, but not limited to, vibration, pressure, seismic, thermal or gas accumulation)..." not included? The output contacts from these devices are oftentimes connected in tripping or control circuits to isolate problem equipment. 5. Due to the critical nature of the trip coil, it must be maintained more frequently if it is not monitored. Trip coils are also considered in the standard as being part of the control circuitry. Table 1-5 has a row labeled "Unmonitored Control circuitry associated with protective functions", which would include trip coils, has a "Maximum Maintenance Interval" of "12 Calendar Years". Any control circuit could fail at any time, but an unmonitored control circuit could fail, and remain undetected for years with the times specified in the Table (it might only be 6 years if I understand that as being the trip test interval specified in the table). Regardless, if a breaker is unable to trip because of control circuit failure, then the system must be operated in

Voter	Entity	Segment	Vote	Comment
				real time assuming that that breaker will not trip for a fault or an event, and backup facilities would be called upon to operate. Thus, for a line fault with a "stuck" breaker (a breaker unable to trip), instead of one line tripping, you might have many more lines deloaded or tripped because of a bus having to be cleared because of a breaker failure initiation. The bulk electric system would have to be operated to handle this contingency. 6. In reference to the FAQ document, Section 5 on Station dc Supply, Question K, clarification is needed with respect to dc supplies for communication within the substation. For example, if the communication systems were run off a separate battery in separate area in a substation, would the standard apply to these batteries or not? 7. To define terms only as they are used in PRC-005-2 is inviting confusion. Although they may be unique to PRC-005-2, some or all of them may be used in future standards, some already may be used in existing standards, and may or may not be deliberately defined. Consistency must be maintained, not only for administrative purposes, but for effective technical communications as well. 8. What is the definition of "Maintenance" as used in the table column "Maximum Maintenance Interval"? Maintenance can range from cleaning a relay cover to a full calibration of a relay. 9. A control circuit is not a component, it is made up of components. 10. Sub-requirement 1.5 needs to be clarified. It is not clear what "Identify calibration tolerances or other equivalent parameters..." means, and may be subject to different interpretations by entities and compliance enforcement personnel. 11. In the Implementation plan for Requirement R1, recommend changing "six" to fifteen. This change would restore the 3-month time difference that existed in the previous draft, between the durations of the implementation periods for jurisdictions that do and do not require regulatory approval. It will ensure equity for those entities located in jurisdictions that do not require regulatory approval, as is the case in Ontario. 12. The 'box' for "Monitored Station dc supply..." in Table 1-4 is not clear. It seems to continue to the next page to a new box. There are multiple activities without clear delineation. Regarding station service transformers, 13. Item 4.2.5.5 under Applicability should be deleted. The purpose of this standard is to protect the BES by clearing generator, generator bus faults (or other electrical anomalies associated with the generator) from the BES. Having this standard apply to generator station service transformers, that have no direct connection to the BES, does meet this criteria. The FAQs

Voter	Entity	Segment	Vote	Comment
				(III.2.A) discuss how the loss of a station service transformer could cause the loss of a generating unit, but this is not the purpose of PRC-005. Using this logic than any system or device in the power plant that could cause a loss of generation should also be included. This is beyond the scope of the NERC standards.

Response: **Thank you for your comments.**

1. The SDT believes that the table headings are appropriate as reflected in the draft standard.

2. Please see the SDT's response to ISO New England Inc. in the formal Standard Comments

3. The intervals and activities specified are believed by the SDT to be technically effective, in a fashion that may be consistently monitored for compliance. Further, FERC Order 693 directs NERC to establish maximum allowable intervals, which implies that minimum activities also need to be prescribed. If an entities' experience is that components require less-frequent maintenance, a performance-based program in accordance with R3 and Attachment A is an option.

4. The SDT concentrated their efforts on protective relays which use the entire group of component types within the Protection System definition. Also, there is currently no technical basis for the maintenance of the devices which respond to non-electrical quantities on which to base mandatory standards related either to activities or intervals. Absent such a technical basis, we are currently unable to establish mandatory requirements, but may do so in the future if such a technical basis becomes available.

5. According to Table 1-5, trip coils of interrupting devices must be verified to operate every 6 years, rather than the 12-year interval. You can maintain these devices more frequently if you desire

6. With respect to dc supply associated only with communication systems, we prescribe, within Table 1-2, that the communications system must be verified as functional every 3 months, unless the functionality is verified by monitoring. The specific station dc supply requirements (Table 1-4) do not apply to the dc supply associated only with communications systems. The SDT decided to eliminate the FAQ document and incorporate the FAQ's contents into the Supplementary Reference Document as appropriate. The SDT considered your comments during this activity.

7. The SDT has proposed these terms for use only within PRC-005-2 because we are concerned that other uses of these terms, either now or in the future, may not be consistent with the terms used here. They are defined only for clarify within this standard. The SDT will confirm with NERC staff that this approach is acceptable.

8. As used in the "Maximum Maintenance Interval" column title of the table, maintenance refers to whatever activities are specified in the Activities column. The term is capitalized in the column title in conformance with normal editorial practice as a title, rather than as a definition.

9. For purposes of this standard, the control circuit is defined as one component type.

Voter	Entity	Segment	Vote	Comment
10. The SDT has determined that the fundamental concerns of Requirement R1, Part 1.5 and the associated changes are addressed within the PSMP definition, and that Requirement R1, Part 1.5 is not necessary; therefore, it has been removed. Requirement R4 has also been re-drafted to address various related concerns noted within comments. The associated VSL has also been revised. Please see Supplementary Reference Document, Section 8 for a discussion of this. **11. In consideration of your comment, "six" has been modified to "twelve" in the Implementation Plan for Requirement R1, making it consistent with the remainder of the Implementation Plan Please see the SDT's response to NPPC in the formal Standard Comments.** **12. Table 1-4 has been further modified for clarity.** **13. In response to many comments, including yours, the SDT has removed 4.2.5.5 from the Applicability of the standard.**				
Brenda Powell	Constellation Energy Commodities Group	6	Negative	1. The applicability has included more generation protective components. The current PRC-005 guidance states that only Station Service transformers for plants 75 MVA and up should be included. The proposed standard includes all station service transformers, regardless of plant size or connection (via generator or system). Constellation Energy Commodities Group does not see the reliability benefits of this increased scope. 2. R1.4 states that all monitoring attributes of all components must be listed and identified. For most generation facilities, it is more efficient to calibrate/check the entire protective system while the plant is in an outage, regardless of a component's monitoring capabilities. This requirement would require those facilities to maintain a list of attributes that won't ever be used, and would not alter their testing frequency. What if an entity were found non-compliant in the situation that was just described? It does not affect the reliability of the BES and therefore R1.4 should be removed. 3. M1 doesn't include a measure for R1.4. It just implies that a facility must maintain a list. 4. The battery listing in the attached table is still too prescriptive. If unmonitored, there should be a quarterly and yearly check, which is implied, but it is then broken out by battery type to be more prescriptive. 5. PTs and CTs are mentioned, but it seems as though the drafting team wants a facility to only test the outputs to ensure they are working properly. To clarify this, Constellation Energy Commodities Group suggests rewording the testing verbiage for PTs and CTs.
Response: **Thank you for your comments.** **1. Section 4.2.5 of "Applicability" specifies that only Generation Facilities that are part of the BES are included.** **2. The SDT disagrees; Requirement R1, Part 1.4 supports Requirement R1, Part 1.2, and seems necessary to assure that entities have appropriately applied the longer intervals associated with monitored components. However, in consideration to your comment the**				

Voter	Entity	Segment	Vote	Comment
SDT has revised Requirement R1, Part 1.4 and has also removed Requirement R2 because of redundancy to Requirement R1, Part 1.4. 3. Measure M1 has been revised in consideration of your comment. 4. The activities for different battery types are addressed separately because the relevant activities differ. 5. The SDT intends that the instrument transformer and associated circuitry be verified to be functional, but believes that customary apparatus maintenance (dielectric, infrared, etc) are not relevant to PRC-005-2.				
Louis S Slade	Dominion Resources, Inc.	6	Negative	Dominion is opposed to this version because Requirement R1.5 is overly prescriptive, requiring an extraordinary level of documentation, with little anticipated improvement in reliability.
Response: Thank you for your comments. The SDT has determined that the fundamental concerns of Requirement R1, Part 1.5 and the associated changes are addressed within the PSMP definition, and that Requirement R1, Part 1.5 is not necessary; therefore, it has been removed. Requirement R4 has also been re-drafted to address various related concerns noted within comments. The associated VSL has also been revised. Please see Supplementary Reference Document, Section 8 for a discussion of this.				
Terri F Benoit	Entergy Services, Inc.	6	Negative	The restructured tables are generally much clearer and the SDT is to be commended on their efforts. 1. However, we believe the Alarming Point Table needs additional clarification with regard to the Maximum Maintenance Interval. If an "alarm producing device" is considered to be a device such as an SCADA RTU, individual entity intervals for such a device would differ, and there isn't necessarily a maximum interval established as there is for Protection System components. Also, if an entity's alarm producing device maintenance is performed in sections and triggered by segment or component maintenance, there would essentially be multiple maximum intervals for the alarm producing device of that entity. On that basis, we suggest the interval verbiage be revised to "When alarm producing device or system is verified, or by sections as per the monitored component/protection system specified maximum interval as applicable". Alternately, if the intention is to establish maximum intervals as simply being no longer than the individual component maintenance intervals as we suggest for inclusion above, then the verbiage should be revised to "When alarm producing component/protection system segment is verified". In either case are we to interpret monitored components with attributes which allow for no periodic maintenance specified as not requiring periodic alarm verification? 2. R1.5 calls for "identification of calibration tolerances or equivalent parameters..." whereas the associated VSL references "failure to establish calibration criteria...." and is listed as high. If R1.5 is to be included in this standard, then we suggest the severity level of a failure to simply "identify" or document such calibration tolerances would be analogous to

Voter	Entity	Segment	Vote	Comment
				the severity level(s) of a "failure to specify one (or Cthe severity level should be consistent with the other elements of R1. Both cases appear to be more of a documentation issue as opposed to a failure to implement. Shouldn't a failure to implement any necessary calibration tolerance be accounted for in R4? R1.5 calls for "identification of calibration tolerances or equivalent parameters for each Protection System Component Type....". We believe the Supplementary Reference document should provide additional information and examples of calibration tolerances or equivalent parameters which would be expected for the various component types. Especially for any "equivalent" parameters which would be required for compliance for a component type besides protective relays. Adding Requirement 1.5 is a significant revision and raises questions as to how broadly an accuracy or equivalent parameter requirement and associated documentation would need to be addressed by entities and/or will be measured for compliance. Discussion on this new requirement does not seem to be addressed anywhere in the FAQ or Supplementary Reference documents. Additionally, to the best of our knowledge, the need for such a requirement was not brought up as a concern or comment on the prior draft version of this standard, and in the context of a requirement need, we don't believe it has been attributed to or actually poses any significant reliability risk. We do not believe this requirement is justified.
Response: **Thank you for your comments.** **1. The Maximum Maintenance Interval column entry in Table 2 has been revised to state, "When alarm producing Protection System component is verified" to clarify this.** **2. The SDT has determined that the fundamental concerns of Requirement R1, Part 1.5 and the associated changes are addressed within the PSMP definition, and that Requirement R1, Part 1.5 is not necessary; therefore, it has been removed. Requirement R4 has also been re-drafted to address various related concerns noted within comments. The associated VSL has also been revised. Please see Supplementary Reference Document, Section 8 for a discussion of this.**				
Mark S Travaglianti	FirstEnergy Solutions	6	Negative	Please see FirstEnergy's comments submitted separately through the comment period posting.
Response: **Thank you for your comments. Please see our response to your comments submitted separately through the formal comment period.**				
Richard L. Montgomery	Florida Municipal Power Agency	6	Negative	1. UFLS and UVLS maintenance and testing is greatly expanded, e.g., we interpreted PRC-008/011 as being only the UFLS/UVLS equipment. The new PRC-005 sweeps in other protection system components, e.g., communications (probably not applicable), voltage and current sensing devices (e.g., instrument transformers), Station DC supply, control circuitry.

Voter	Entity	Segment	Vote	Comment
				What's key about this is that these components are all part of distribution system protection, so, these activities would not be covered by other BES protection system maintenance and testing. I'm sure we are testing batteries and the like, but, we are probably not testing battery chargers and control circuity, and, in many cases distribution circuits are such that it is very difficult, if not impossible, to test control circuitry to the trip coil of the breaker without causing an outage of the customers on that distribution circuit. There is no real reliability need for this either. Unlike Transmission and Generation Protection Systems which are needed to clear a fault and may only have one or two back-up systems, there are thousands and thousands of UFLS relays and if one fails to operate, it will not be noticeable to the event. It does make sense to test the relays themselves in part to ensure that the regio0nsl UFLS program is being met, but, to test the other protection system components is not worthwhile. Note that DC Supplies and most of the control circuitry of distribution lines are "tested" frequently by distribution circuits clearing faults such as animals, vegetation blow-ins, lightning, etc., on distribution circuits, reducing the value of testing to just about null. However, this version is better than prior versions because it essentially requires the entity to determine it's own period of maintenance and testing for UFLS/UVLS for DC Supply and control circuitry. 2. Applicability, 4.2.1, should reflect the Y&W and Tri-State interpretation (Project 2009-17) of "transmission Protection System" and should state: "Protection Systems applied on, or designed to provide protection for a BES Facility and that trips a BES Facility" 3. Applicability, 4.2. - does not reflect the interpretation of Project 20009-10 that excludes non-electrical protection (e.g., sudden pressure relays) and auxiliary relays. Because the definition of Protection System (recently approved) does not clearly exclude "non-electrical" protection, the Applicability section should. For instance,, a vibration monitor, steam pressure, etc. protection of generators, sudden pressure protection of transformers, etc. should not be included in the standard. An alternative is to change the definition of Protection System to make sure it only includes electrical the VRF of R1 should be Low since the attached tables are essentially the PSMP.

Response: **Thank you for your comments.**

1. **For UFLS and UVLS, the maintenance activities related to station dc supply and control circuitry are somewhat constrained relative to similar activities for Protection Systems in general. Regardless, without proper functioning of these component types, UFLS and UVLS will not respond as expected, and will therefore degrade BES system reliability, particularly during the stressed system conditions for which UFLS and UVLS are installed. Relative to control circuitry, Table 1-5 specifically**

Voter	Entity	Segment	Vote	Comment
				excludes UFLS and UVLS from maintenance activities related to the interrupting device trip coil. **2. This interpretation is not yet approved by FERC. When this interpretation is approved, the SDT will incorporate it within PRC-005-2. However, the SDT has made changes to Applicability 4.2.1.** **3. The recently-balloted revision of the definition of Protection System, which has been approved by the NERC Board of Trustees and will soon be filed with FERC for approval, clearly includes only protective relays that respond to electrical quantities. As for auxiliary relays, the interpretation to which you refer states that they are not explicitly included, but are included to the degree that an entity's Protection System control circuitry addresses them(which has been identified as a reliability gap), and are being added to PRC-005-2 to resolve the gap.**
Thomas E Washburn	Florida Municipal Power Pool	6	Negative	1. UFLS and UVLS maintenance and testing is greatly expanded, e.g., we interpreted PRC-008/011 as being only the UFLS/UVLS equipment. The new PRC-005 sweeps in other protection system components, e.g., communications (probably not applicable), voltage and current sensing devices (e.g., instrument transformers), Station DC supply, control circuitry. What's key about this is that these components are all part of distribution system protection, so, these activities would not be covered by other BES protection system maintenance and testing. I'm sure we are testing batteries and the like, but, we are probably not testing battery chargers and control circuity, and, in many cases distribution circuits are such that it is very difficult, if not impossible, to test control circuitry to the trip coil of the breaker without causing an outage of the customers on that distribution circuit. There is no real reliability need for this either. Unlike Transmission and Generation Protection Systems which are needed to clear a fault and may only have one or two back-up systems, there are thousands and thousands of UFLS relays and if one fails to operate, it will not be noticeable to the event. It does make sense to test the relays themselves in part to ensure that the regio0nsl UFLS program is being met, but, to test the other protection system components is not worthwhile. Note that DC Supplies and most of the control circuitry of distribution lines are "tested" frequently by distribution circuits clearing faults such as animals, vegetation blow-ins, lightning, etc., on distribution circuits, reducing the value of testing to just about null. However, this version is better than prior versions because it essentially requires the entity to determine it's own period of maintenance and testing for UFLS/UVLS for DC Supply and control circuitry. 2. Applicability, should reflect the Y&W and Tri-State interpretation (Project 2009-17) of "transmission Protection System" and should state: "Protection Systems applied on, or designed to provide protection for a BES Facility and that trips a BES Facility" 3. Applicability, 4.2. - does not reflect the interpretation of Project 20009-10 that

Voter	Entity	Segment	Vote	Comment
				excludes non-electrical protection (e.g., sudden pressure relays) and auxiliary relays. Because the definition of Protection System (recently approved) does not clearly exclude "non-electrical" protection,the Applicability section should. For instance,, a vibration monitor, steam pressure, etc. protection of generators, sudden pressure protection of transformers, etc. should not be included in the standard. An alternative is to change the definition of Protection System to make sure it only includes electrical the VRF of R1 should be Low since the attached tables are essentially the PSMP.
Response: **Thank you for your comments.** **1. For UFLS and UVLS, the maintenance activities related to station dc supply and control circuitry are somewhat constrained relative to similar activities for Protection Systems in general. Regardless, without proper functioning of these component types, UFLS and UVLS will not respond as expected, and will therefore degrade BES system reliability, particularly during the stressed system conditions for which UFLS and UVLS are installed. Relative to control circuitry, Table 1-5 specifically excludes UFLS and UVLS from maintenance activities related to the interrupting device trip coil.** **2. This interpretation is not yet approved by FERC. When this interpretation is approved, the SDT will incorporate it within PRC-005-2. However, the SDT has made changes to Applicability 4.2.1.** **3. The recently-balloted revision of the definition of Protection System, which has been approved by the NERC Board of Trustees and will soon be filed with FERC for approval, clearly includes only protective relays that respond to electrical quantities. As for auxiliary relays, the interpretation to which you refer states that they are not explicitly included, but are included to the degree that an entity's Protection System control circuitry addresses them(which has been identified as a reliability gap), and are being added to PRC-005-2 to resolve the gap.**				
Silvia P Mitchell	Florida Power & Light Co.	6	Negative	This draft standard is too perscriptive. 1. Requirement R1, Part 1.5 would be overwhelming if approved. Requirement R1, Part 1.5 should be deleted. 2. Requirement R4, Part 4.2 phrase "established in accordance with Requirement R1, Part 1.5" should be deleted. The standard without these additional requirements would be sufficient to establish that the Protection System is maintained and protects the BES. 3. Table 1-2 Component Type Communications Systems Maximum Maintenance Interval of 3 Calendar Months to verify that the communications system is functional for any unmonitored communications system is unyielding. Most communication failures are caused by power supply failures which Next Era does monitor. Based on experience and monitoring of communication power supplies, 12 calendar months would be adequate. The maximum maintenance interval should be changed from 3 calendar months to 12 calendar months. 4. Table 1-4, Component Type Station dc Supply Maximum Maintenance Interval of 3 Calendar Months to inspect electrolyte levels on "Any unmonitored station

Voter	Entity	Segment	Vote	Comment
				dc supply not having the monitoring attributes of a category below. (Excluding UFLS and UVLS)" is too stringent. Verifying battery charger float voltage every 18 calendar months is sufficient to prevent excessive gassing and water loss of battery cells. The maximum maintenance interval should be changed from 3 calendar months to 6 calendar months. 5. Table 1-4, Component Type Station dc Supply Maximum Maintenance Interval of 3 Calendar Months to measure the internal ohmic values on "Unmonitored Station dc supply with Valve Regulated Lead-Acid (VRLA) batteries that does not have the monitoring attributes of a category below. (excluding UFLS and UVLS)" is too stringent. With the standard's requirement to verify the float voltage every 18 calendar months, measuring the internal ohmic values every 6 calendar months would be adequate. The maximum maintenance interval should be changed from 3 calendar months to 6 calendar months.
Response: **Thank you for your comments.** **1. The SDT has determined that the fundamental concerns of Requirement R1, Part 1.5 and the associated changes are addressed within the PSMP definition and that Requirement R1, Part 1.5 is not necessary; therefore, it has been removed.** **2. Requirement R4 has also been re-drafted to address various related concerns noted within comments. Please see Supplementary Reference Document, Section 8 for a discussion of this. The associated VSL has also been revised.** **3. The activity to which you refer is an inspection-based activity based on overall functionality, and addresses functionality of various communications technologies. If an entity monitors the power supply (as suggested), doing so addresses one portion of the functionality, but does not address channel integrity, etc.** **4. The SDT disagrees, and believes that the specified activities, at the specified intervals, are appropriate.** **5. The standard has been revised as you suggested.**				
Paul Shipps	Lakeland Electric	6	Negative	Small entities with only one or two BES substations may not have enough components to take advantage of the expanded maintenance intervals afforded by a performance-based maintenance program. Aggregating these components across different entities doesn't seem too logical considering the variations at the sub-component level (wire gauge, installation conditions, etc.)
Response: **Thank you for your comments. Entities are not required to use performance-based maintenance programs. Requirement R3 and Attachment A are provided for the use of entities that can (and desire to) avail themselves of this approach.**				
Eric Ruskamp	Lincoln Electric System	6	Affirmative	While the proposed draft of the standard is acceptable as currently written, LES would like the drafting team to consider the following comments. (1) Table 1-1 should state "Test and calibrate (if necessary)" in the first section under activities. If a relay passes the test, there is no need to calibrate it.

Voter	Entity	Segment	Vote	Comment
				Therefore, not all relays will require calibration. (2) Please explain the drafting team's reason for not checking the trip coils of breakers in the UFLS/UVLS schemes but ensuring that all others are operated every six years. It would appear that they can all be lumped into the same group one way or another. (3) In regards to Specific Gravity Testing, many people do not perform the specific gravity test routinely if they perform the individual cell internal ohmic test routinely. LES asks the drafting team to consider allowing the internal cell ohmic test as a substitute for the specific gravity test.
Response: **Thank you for your comments.** **1. Table 1-1 has been modified as you suggest.** **2. This is an intentional difference between UFLS/UVLS and the remainder of the Protection Systems addressed within the Standard, because of the distributed nature of UFLS/UVLS and because these devices are usually tripping distribution system elements.** **3. Table 1-4 does not specify specific gravity testing.**				
Brad Jones	Luminant Energy	6	Negative	Luminant commends the PRC-005-2 Standard Drafting Team for its quality efforts in producing this version of the Standard however; Luminant must cast a negative ballot vote for this present version of the Standard. The negative vote against the present version of PRC-005-2 is solely based on the addition of Requirement R1 Part 1.5 with its associated reference to it in Requirement R4 Part 4.2 and the VSL table. It is Luminant's opinion that this new Requirement as written subjects all Transmission Owners, Generation Owners and Distribution Providers to vague interpretations of a requirement that cannot be complied with because it is impossible for any of them to draft the necessary documentation to be compliant with the Standard. As stated in the High VSL associated with Part 1.5 of Requirement R1 all owners will fail "to establish calibration tolerance or equivalent parameters to determine if every individual discrete piece of equipment in a Protection System is within acceptable parameters." It is Luminant's opinion that the measurement of acceptable performance during maintenance and testing activities can be accomplished with a Pass/Fail type of documentation on a test form. No company can effectively establish calibration tolerance parameters for an entire "component type" of the Protection System. Doing so could be detrimental to the reliability of the grid. Parameters are dependent on the location, application and situation specific to each Protection System device.

Voter	Entity	Segment	Vote	Comment
				The inclusion of Part 1.5 of Requirement R1 is a significant addition to the standard, and by NERC Rules of Procedure requires the input and consideration of the full Standard Drafting Team.
Response: **Thank you for your comments. The SDT has determined that the fundamental concerns of Requirement R1, Part 1.5 and the associated changes are addressed within the PSMP definition, and that Requirement R1, Part 1.5 is not necessary; therefore, it has been removed. Requirement R4 has also been re-drafted to address various related concerns noted within comments. The associated VSL has also been revised. Please see Supplementary Reference Document, Section 8 for a discussion of this.**				
Daniel Prowse	Manitoba Hydro	6	Negative	1. Implementation Plan (Timeline) for R1: In areas not requiring regulatory approval, the 6 month time frame proposed for R1 is not achievable and is not consistent with areas requiring regulatory approval. To be consistent, the effective date for R1 in jurisdictions where no regulatory approval is required should be the first day of the first calendar quarter 12 months after BOT approval. 2. VSLs: The high VSL for R1 "Failed to include all maintenance activities relevant for the identified monitoring attributes specified in Tables 1-1 through 1-5" may be interpreted in different ways and should be further clarified. 3. Table 1-4: The requirements for batteries listed in Table 1-4 do not appear to be consistent with the comments in the FAQ Section (V 1A Example 1). Please see comments submitted during the formal comment period for further detail. 4. Table 1-4: The requirement for a 3 month check on electrolyte level seems too frequent based on our experience. We would like to point out that although IEEE std 450 (which seems to be the basis for table 1-4) does recommend intervals it also states that users should evaluate these recommendations against their own operating experience.
Response: **Thank you for your comments.** **1. In consideration of your comment, "six" has been modified to "twelve" in the Implementation Plan for R1, making it consistent with the remainder of the Implementation Plan.** **2. The SDT does not understand your concern; further details are needed.** **3. The SDT decided to eliminate the FAQ document and incorporate the FAQ's contents into the Supplementary Reference Document as appropriate. The SDT considered your comments during this activity.** **4. The SDT believes that the 3-month interval specified in the Standard is appropriate.**				
Joseph O'Brien	Northern Indiana Public Service Co.	6	Negative	We disagree with the practice of performing calibration checks on non microprocessor relays every 6 years.
Response: **Thank you for your comments. The SDT considers it important that calibration checks be performed on non microprocessor relays no less frequently than every 6 years.**				

Voter	Entity	Segment	Vote	Comment
James D. Hebson	PSEG Energy Resources & Trade LLC	6	Negative	The PSEG Companies do not agree with the Facilities as currently described in section 4.2.5.5. Please refer to detailed comments provided in the formal Comment Form.
Response: **Thank you for your comments. Please see our response to your comments from the formal comment period.**				
Dennis Sismaet	Seattle City Light	6	Negative	The proposed Standard PRC-005-2 is an improvement over the previous draft in that it provides more consistency in maintenance and testing duration internals. Notwithstanding, two issues are of concern to Seattle City Light such that it is compelled to vote no: 1) the establishment of bookends for standard verification and 2) the implementation timelines for entities with systems where electro-mechanical relays still compose a significant number of components in their protection systems. 1. Bookends: Proposed Standard PRC-005-2 specifies long inspection and maintenance intervals, up to 12 years, which correspondingly exacerbates the so-called “bookend” issue. To demonstrate that interval-based requirements have been met, two dates are needed - bookends. Evidencing an initial date can be problematic for cases where the initial date would occur prior to the effective date of a standard. NERC has provided no guidance on this issue, and the Regions approach it differently. Some, such as Texas Regional Entity, require initial dates beginning on or after the effective date of a Standard. Compliance with intervals is assessed only once two dates are available that occur on or after a standard took effect. Other regions, such as Western Electricity Coordinating Council (WECC), require that entities evidence an initial date prior to the effective date of a standard. For WECC, compliance with intervals is assessed as soon as a standard takes effect. Such variation makes application of standards involving bookends uncertain, arbitrary, capricious, and in the case of WECC, possibly illegal. Proposed Standard PRC-005-2 will be another such standard. Indeed this Standard will involve by far the largest number of bookends of any NERC standard - many thousands for a typical entity. Furthermore, the long inspection and maintenance intervals introduced in the draft will require entities in WECC, for instance, to evidence initial bookend dates prior to the date original PRC-005-1 took effect. For the 12-year intervals for CTs and VTs in proposed Standard PRC-005-2, many initial dates will occur prior to the 2005 Federal Power Act that authorized Mandatory Reliability Standards and even reach back before the 2003 blackout that catalyzed the effort to pass the Federal Power Act. As a result, many entities

Voter	Entity	Segment	Vote	Comment
				in WECC maybe at risk of being found in violation of proposed Standard PRC-005-2 immediately upon its implementation. Seattle City Light requests that NERC address the bookends issue, either within proposed Standard PRC-005-2 or in a separate, concurrent document. 2. Legacy Systems: Many entities still have legacy protection systems that rely upon electro-mechanical relays. Effective testing approaches differ between electro-mechanical and digital relay systems. Thus, although the proposed standard rightly looks to the future of digital relays by specifying testing and maintenance focused on protection systems as a whole, the proposed implementation timelines create a level of hardship for those utilities with legacy systems. In example, auxilary relay and trip coil testing may be essential to prove the correct operation of complex, multi-function digital protection systems. However, for legacy systems with single-function electro-mechanical components, the considerable documentation and operational testing needed to implement and track such testing is not necessarily proportional to the relative risk posed by the equipment to the bulk electric system. Performance testing of electro-mechanical systems, particularly regarding control circuits, will require extensive disconnection and reconnection of portions of the circuits. Such activities will likely cause far more problems on restoration-to-service than they will locate and correct. As such, to assist entities in their implementation efforts, we believe provision of alternatives are necessary, such as additional implementation time through phasing and/or through technical feasibility exceptions.
Response: Thank you for your comments. 1. This issue has been addressed by NERC in Compliance Application Notice CAN-008 "PRC-005 R2 Pre-June 18 Evidence". 2. Please see Sections 8 and 15.3 of the Supplementary Reference Document for a discussion on this topic. FERC Order 693 directs that NERC establish requirements for the maintenance of the Protection System and control circuitry is a portion thereof. Therefore, requirements for the maintenance of the control circuitry are necessary and the SDT has developed those requirements in a fashion that affords entities with the opportunity to best meet those requirements.				
David F. Lemmons	Xcel Energy, Inc.	6	Negative	We feel that several improvements were made since the last draft. However, we feel that some gaps exist that should be addressed before moving this project forward. We have detailed our issues in our formal comments.
Response: Thank you for your comments. Please see our responses to your formal comments.				
Jim R Stanton	SPS Consulting Group Inc.	8	Negative	1. The standard as written is wildly prescriptive and violates the concept of "what and not how." The standard and its Tables seek to prescribe in detail maintenance and testing processes which should be left up to the owners and operators of the protection systems.

Voter	Entity	Segment	Vote	Comment
				2. References to Tables 1-5 should be deleted from the standard itself and moved to a reference section.
Response: **Thank you for your comments.** **1. The intervals and activities specified are believed by the SDT to be technically effective, in a fashion that may be consistently monitored for compliance. Further, FERC Order 693 directs NERC to establish maximum allowable intervals, which implies that minimum activities also need to be prescribed. If an entities' experience is that components require less-frequent maintenance, a performance-based program in accordance with Requirement R3 and Attachment A is an option.** 2. **Tables 1-1 through 1-5 are considered by the SDT to be an integral part of the requirements of the standard and thus belong within the Standard.**				
Louise McCarren	Western Electricity Coordinating Council	10	Affirmative	Our affirmative vote reflects our belief that the proposed PRC-005-2 is an overall improvement to the four standards that it would replace. We also believe that it is appropriate to address maintenance and testing of all protection systems in one standard rather than in four individual standards.
Response: **Thank you for your comments and support.**				

END OF REPORT

NERC
NORTH AMERICAN ELECTRIC RELIABILITY CORPORATION

Consideration of Comments on Non-binding Poll of VRFs and VSLs associated with PRC-005-2 – Protection System Maintenance (Project 2007-17)

The Project 2007-17 Drafting Team thanks all commenters who submitted comments on the non-binding poll of VRFs and VSLs associated with the proposed revisions to PRC-005-2. The standard and associated VRFs and VSLs were posted for a 30-day public comment period from November 17, 2010 through December 17, 2010, with a 10-day ballot beginning on December 10, 2010 through December 21, 2010. The stakeholders were asked to provide feedback on the VRFs and VSLs. There were 28 sets of comments, including comments from more than 46 different people from approximately 26 companies representing 6 of the 10 Industry Segments as shown in the table on the following pages.

http://www.nerc.com/filez/standards/Protection_System_Maintenance_Project_2007-17.html

If you feel that your comment has been overlooked, please let us know immediately. Our goal is to give every comment serious consideration in this process! If you feel there has been an error or omission, you can contact the Vice President and Director of Standards, Herb Schrayshuen, at 609-452-8060 or at herb.schrayshuen@nerc.net. In addition, there is a NERC Reliability Standards Appeals Process.[1]

[1] The appeals process is in the Reliability Standards Development Procedures: http://www.nerc.com/standards/newstandardsprocess.html.

The Industry Segments are:

1 — Transmission Owners
2 — RTOs, ISOs
3 — Load-serving Entities
4 — Transmission-dependent Utilities
5 — Electric Generators
6 — Electricity Brokers, Aggregators, and Marketers
7 — Large Electricity End Users
8 — Small Electricity End Users
9 — Federal, State, Provincial Regulatory or other Government Entities
10 — Regional Reliability Organizations, Regional Entities

Segment	1
Organization	Ameren Services
Member	Kirit S. Shah
Comment	The Lower VSL for all Requirements should begin above 1% of the components. For example for R4: "Entity has failed to complete scheduled program on 1% to 5% of total Protection System components." PRC-005-2 unrealistically mandates perfection without providing technical justification. A basic premise of engineering is to allow for reasonable tolerances, even Six Sigma allows for defects. Requiring perfection may well harm reliability in that valuable resources will be distracted from other duties.
Response	**Thank you for your comments. The NERC criteria for VSLs do not currently permit them to allow some level of non-performance without being in violation.**
Segment	1,3,6
Organization	American Electric Power, AEP Marketing
Member	Paul B. Johnson, Raj Rana, Edward P. Cox
Comment	1. The VSL table should be revised to remove the reference to the Standard Requirement 1.5 in the R1 "High" VSL. 2. All four levels of the VSL for R2 make reference to a "condition-based PSMP." However, nowhere in the standard is the term "condition-based" used in reference to defining ones PSMP. The VSL for R2 should be revised to remove reference to a condition-based PSMP; alternatively the Standard could be revised to include the term "condition-based" within the Standard Requirements and Table 1. 3. In multiple instances, Table 1 uses the phrase "No periodic maintenance specified" for the Maximum Maintenance Interval. Is this intended to imply that a component with the designated attributes is not required to have any periodic maintenance? If so, the wording should more clearly state "No periodic maintenance required" or perhaps "Maintain per manufacturers recommendations." Failure to clearly state the maintenance requirement for these components leaves room for interpretation on whether a Registered Entity has maintenance and testing program for devices where the Standard has not specified a periodic maintenance interval and the manufacturer states that no maintenance is required. 4. Three different types of maintenance programs (time-based, performance-based and condition-based) are referenced in the standard or VSLs, yet the time-based and condition-based programs are neither defined nor described. Certain terms defined within the definition section (such as Countable Event or Segment) only make sense knowing what

	those three programs entail. These programs should be described within the standard itself and not assume knowledge of material in the Supplementary Reference or FAQ.
Response	**Thank you for your comments.** **1. The SDT has determined that the fundamental concerns of Requirement R1, Part 1.5 and the associated changes are addressed within the PSMP definition, and that Requirement R1, Part 1.5 is not necessary; therefore, it has been removed. Requirement R4 has also been re-drafted to address various related concerns noted within comments. The associated VSL has also been revised. Please see Supplementary Reference Document, Section 8 for a discussion of this.** **2. The SDT concluded that Requirement R2 is redundant with Requirement R1, Part 1.4, and has deleted Requirement R2 (together with the associated Measure and VSL).** **3. If the indicated monitoring attributes are present, no "hands-on" periodic maintenance is required, as the monitoring of the component is providing a continuing indication of its functionality.** **4. The term, "condition-based" has been removed from the draft standard. The other terms are used, but are clear in the context in which they are used.**
Segment	1
Organization	Beaches Energy Services
Member	Joseph S. Stonecipher
Comment	The VRF of R1 should be Low since the attached tables are essentially the PSMP.
Response	**Thank you for your comments. The SDT disagrees; the Tables establish the intervals and activities, and Requirement R1 addresses the establishment of an entity's individual PSMP.**
Segment	3
Organization	City of Green Cove Springs
Member	Gregg R Griffin

Comment	1. Small entities with only one or two BES substations may not have enough components to take advantage of the expanded maintenance intervals afforded by a performance-based maintenance program. Aggregating these components across different entities doesn't seem too logical considering the variations at the sub-component level (wire gauge, installation conditions, etc.) 2. Trip circuits are interconnected to perform various functions. Testing a trip path may involve disabling other features (i.e. breaker failure or reclosing) not directly a part of the test being performed. Temporary modifications made for testing introduce a chance to unknowingly leave functions disabled, contacts shorted, jumpers lifted, etc. after testing has been completed. Trip coils and cable runs from panels to breaker can be made to meet the requirements for monitored components. The only portions of the circuitry where this may not be the case is in the inter and intra-panel wiring. Because such portions of the circuitry have no moving parts and are located inside a control house, the exposure is negligible and should not be covered by the requirements. Entities will be at increased compliance risk as they struggle to properly document the testing of all parallel tripping paths. 3. Table 1-4 requires a comparison of measured battery internal ohmic value to battery baseline. Since battery manufacturers do not provide this value, it is unclear what the "baseline" values ought to be if an entity recently began performing this test (assuming it's several years after the commissioning of the battery.) Would it be acceptable for an entity to establish baseline values based on statistical analysis of multiple test results specific to a given battery manufacturer and design? 4. UFLS and UVLS maintenance and testing is greatly expanded, e.g., we interpreted PRC-008/011 as being only the UFLS/UVLS equipment. The new PRC-005 sweeps in other protection system components, e.g., communications (probably not applicable), voltage and current sensing devices (e.g., instrument transformers), Station DC supply, control circuitry. What's key about this is that these components are all part of distribution system protection, so, these activities would not be covered by other BES protection system maintenance and testing. I'm sure we are testing batteries and the like, but, we are probably not testing battery chargers and control circuitry, and, in many cases distribution circuits are such that it is very difficult, if not impossible, to test control circuitry to the trip coil of the breaker without causing an outage of the customers on that distribution circuit. There is no real reliability need for this either. Unlike Transmission and Generation Protection Systems which are needed to clear a fault and may only have one or two back-up systems, there are thousands and thousands of UFLS relays and if one fails to operate, it will not be noticeable to the event. It does make sense to test the relays themselves in part to ensure that the regio0nsl UFLS program is being met, but, to test the other protection system components is not worthwhile. Note that DC Supplies and most of the control

	circuitry of distribution lines are "tested" frequently by distribution circuits clearing faults such as animals, vegetation blow-ins, lightning, etc., on distribution circuits, reducing the value of testing to just about null. However, this version is better than prior versions because it essentially requires the entity to determine it's own period of maintenance and testing for UFLS/UVLS for DC Supply and control circuitry. 5. Applicability, 4.2.1, should reflect the Y&W and Tri-State interpretation (Project 2009-17) of "transmission Protection System" and should state: "Protection Systems applied on, or designed to provide protection for a BES Facility and that trips a BES Facility" 6. Applicability, 4.2. - does not reflect the interpretation of Project 20009-10 that excludes non-electrical protection (e.g., sudden pressure relays) and auxiliary relays. Because the definition of Protection System (recently approved) does not clearly exclude "non-electrical" protection, the Applicability section should. For instance,, a vibration monitor, steam pressure, etc. protection of generators, sudden pressure protection of transformers, etc. should not be included in the standard. An alternative is to change the definition of Protection System to make sure it only includes electrical the VRF of R1 should be Low since the attached tables are essentially the PSMP.
Response	**Thank you for your comments.** **1. Entities are not required to use performance-based maintenance programs. Requirement R3 and Attachment A are provided for the use of entities that can (and desire to) avail themselves of this approach.** **2. The requirement relative to control circuitry does not explicitly require trip or functional testing of the entire path; it requires that entities verify all paths without specifying the method of doing so. Please see Section 15.5 of the Supplementary Reference Document for a detailed discussion.** **3. Typical baseline values for various types of lead-acid batteries can be obtained from the test equipment manufacturer, the battery vendor, and perhaps other sources for batteries that are already in service. For new batteries, the initial battery baseline ohmic values should be measured upon installation and used for trending.** **4. For UFLS and UVLS, the maintenance activities related to station dc supply and control circuitry are somewhat constrained relative to similar activities for Protection Systems in general. Regardless, without proper functioning of these component types, UFLS and UVLS will not respond as expected, and will therefore degrade BES system reliability, particularly during the stressed system conditions for which UFLS and UVLS are installed. Relative to control circuitry, Table 1-5 specifically excludes UFLS and UVLS from maintenance activities relate to the interrupting device trip coil.** **5. This interpretation is not yet approved. When this interpretation is approved, the SDT will**

	incorporate it within PRC-005-2. However, the SDT has made changes to Applicability 4.2.1. **6. The recently-balloted revision of the definition of Protection System, which has been approved by the NERC Board of Trustees and will soon be filed with FERC for approval, clearly includes only protective relays that respond to electrical quantities. As for auxiliary relays, the interpretation to which you refer states that they are not explicitly included, but are included to the degree that an entity's Protection System control circuitry addresses them (which has been identified as a reliability gap), and are being added to PRC-005-2 to resolve the gap.**
Segment	1, 5, 6
Organization	Consolidated Edison Co. of New York
Member	Christopher L de Graffenried, Wilket (Jack) Ng, Nickesha P Carrol
Comment	VSL/VRF Ballot Comments: The Modified VSL's and VRF's – 1. Because all the requirements deal with protective system maintenance and testing, violations could directly cause or contribute to bulk electric system instability, etc., the VRFs should all be "High". 2. The Time Horizons should all be "Operations Planning" because of the immediacy of a failure to meet the requirements. 3. For the R1 Lower VSL, include a second part to read: Failed to identify calibration tolerances or other equivalent parameters for one Protection System component type that establish acceptable parameters for the conclusion of maintenance activities. 4. For the R1 Moderate VSL, suggest similar wording as for the Lower VSL but specifying two Protection System component types. 5. For the R1 High VSL, suggest changing the wording of the 3rd part to be similar to the Lower VSL to match the requirement and to cater for more than two Protection System component types. 6. For the R3 Severe VSL, in part 3, replace "less" with fewer.
Response	**Thank you for your comments.** **1. Consideration of the VRFs, in association with the VRF Guidelines, yields the VRFs as established within the draft Standard.** **2. The SDT has reviewed the time horizons, and believes that Requirement R1 is properly assigned a Long-Term Planning time horizon, as the activities to develop a program and to determine the monitoring attributes of components are performed within the related time period. The SDT concluded that Requirement R2 is redundant to Requirement R1 and has deleted Requirement R2 (together with the Measure and**

	VSL). **3. The SDT has determined that the fundamental concerns of Requirement R1, Part 1.5 and the associated changes are addressed within the PSMP definition, and that Requirement R1, Part 1.5 is not necessary; therefore, it has been removed. The associated VSL has also been revised.** **4. Requirement R1 'Moderate' appears to be similar to Requirement R1 'Lower' as you suggest.** **5. The SDT believes that, if more than two Protection System component types are not addressed, the 'Severe' VSL is appropriate.** **6. The SDT believes that your suggestion is similar to the existing text, and declines to modify the standard.**
Segment	5
Organization	Constellation Power Source Generation, Inc.
Member	Amir Y Hammad
Comment	The VRFs and VSLs still do not take into account smaller generation facilities that do not have as many protection system components as other facilities. They are penalized much more heavily.
Response	**Thank you for your comments. The percentage levels within Requirement R4 are consistent with many other NERC Standards, and are also consistent with the guidance within the NERC VSL Guidelines.**
Segment	4
Organization	Consumers Energy
Member	David Frank Ronk
Comment	1. Table 1-3 states, "are received by the protective relays". Does this require that the inputs to each individual relay must be checked, or is it sufficient to verify that acceptable signals are received at the relay panel, etc? 2. Relative to Table 1-5, the activities will likely require that system components be removed from service to complete those activities. If the changes to the BES definition (per the FERC Order) causes system elements such as 138 kV connected distribution transformers to be considered as BES, these components can not be removed from service for maintenance without outaging customers. The standard must exempt these components from the activities of Table 1-5 if the activity would result in deenergizing customers. 3. For the component types addressed in Tables 1-3 and 1-5, the requirements may cause entities to identify components very differently than they are currently doing, and doing so may take several years to complete. The Implementation Plan for R1 and R4 is too aggressive in that it may not

	permit entities to complete the identification of discrete components and the associated maintenance and implement their program as currently proposed. We propose that the Implementation Plan specifically address the components in Table 1-3 and 1-5 with a minimum of 3 calendar years for R1 and 12 calendar years after that for R4. 4. As for the interval in Table 1-4 regarding the battery terminal connection resistance, we believe that an 18-month interval is excessively frequent for this activity, and suggest that it be moved to the 6-calendar-year interval. 5. In Table 1-4, we currently re-torque all of the battery terminal connections every 4-years, rather than measuring the terminal connection resistance to determine if the connections are sound. Disregarding the interval, would this activity satisfy the "verify the battery terminal connection resistance" activity?
Response	**Thank you for your comments.** **1. The SDT intends that the voltage and current signals properly reach each individual relay, but there may be several methods of accomplishing this activity.** **2. This concern seems more properly to be one to be addressed during the activities to develop the new BES definition, rather than within PRC-005-2** **3. The Implementation Plan for Requirement R1 has been modified from 6 months to 12 months. The Standard has also been modified (Requirement R1, Part 1.1) to not specifically require identification of all individual Protection System components. The Implementation Plan for Requirement R4 has been revised to add one year to all established dates.** **4. IEEE 450, 1188, 1106 all recommend this activity at a 12-month interval. Please see Section 15.4.1 of the Supplementary Reference Document for a discussion of this activity.** **5. Re-torqueing the battery terminals would not meet this requirement.**
Segment	5
Organization	Consumers Energy
Member	James B Lewis
Comment	The issues raised in our comments to the proposed Standard need to be addressed.
Response	**Thank you for your comments. Please see our response to your comments which were submitted during the formal comment period.**
Segment	1, 3, 5, 6

Organization	Dominion
Member	John K Loftis, Michael F Gildea, Mike Garton, Louis S Slade
Comment	VSL R3. How do you measure a percentage of countable events over a period of time? How are you to determine what the total population to be considered? An entity should not be penalized if they are following their program, correcting issues, and documenting all actions, even if there is a high failure rate in an instance.
Response	**Thank you for your comments. Attachment A, to which Requirement R3 refers, specifies that countable events are assessed on the basis of "for the greater of either the last 30 components maintained or all components maintained in the previous year."**
Segment	1, 3, 4, 5, 6
Organization	FirstEnergy Energy Delivery, FirstEnergy Solutions, Ohio Edison Company
Member	Robert Martinko, Kevin Querry, Kenneth Dresner, Mark S Travaglianti
Comment	Please see FirstEnergy's comments submitted separately through the comment period posting.
Response	**Thank you for your comments. Please see our response to your comments which were submitted during the formal comment period.**
Segment	4, 5
Organization	Florida Municipal Power Agency
Member	Frank Gaffney, David Schumann
Comment	1. UFLS and UVLS maintenance and testing is greatly expanded, e.g., we interpreted PRC-008/011 as being only the UFLS/UVLS equipment. The new PRC-005 sweeps in other protection system components, e.g., communications (probably not applicable), voltage and current sensing devices (e.g., instrument transformers), Station DC supply, control circuitry. What's key about this is that these components are all part of distribution system protection, so, these activities would not be covered by other BES protection system maintenance and testing. I'm sure we are testing batteries and the like, but, we are probably not testing battery chargers and control circuity, and, in many cases distribution circuits are such that it is very difficult, if not impossible, to test control circuitry to the trip coil of the breaker without causing an outage of the customers on that distribution circuit. There is no real reliability need for this either. Unlike Transmission and Generation Protection Systems which are needed to clear a fault and may only have one or two back-up systems, there are thousands and thousands of UFLS relays and if one fails to operate, it will not be noticeable to the event. It does make sense to test the relays themselves in part to ensure that the regio0nsl UFLS program is being met, but, to test the other protection system components is not worthwhile. Note that DC Supplies and most of the control

	circuitry of distribution lines are "tested" frequently by distribution circuits clearing faults such as animals, vegetation blow-ins, lightning, etc., on distribution circuits, reducing the value of testing to just about null. However, this version is better than prior versions because it essentially requires the entity to determine it's own period of maintenance and testing for UFLS/UVLS for DC Supply and control circuitry. 2. Applicability, 4.2.1, should reflect the Y&W and Tri-State interpretation (Project 2009-17) of "transmission Protection System" and should state: "Protection Systems applied on, or designed to provide protection for a BES Facility and that trips a BES Facility" 3. Applicability, 4.2. - does not reflect the interpretation of Project 20009-10 that excludes non-electrical protection (e.g., sudden pressure relays) and auxiliary relays. Because the definition of Protection System (recently approved) does not clearly exclude "non-electrical" protection,the Applicability section should. For instance,, a vibration monitor, steam pressure, etc. protection of generators, sudden pressure protection of transformers, etc. should not be included in the standard. An alternative is to change the definition of Protection System to make sure it only includes electrical the VRF of R1 should be Low since the attached tables are essentially the PSMP.
Response	**Thank you for your comments.** **1. For UFLS and UVLS, the maintenance activities related to station dc supply and control circuitry are somewhat constrained relative to similar activities for Protection Systems in general. Regardless, without proper functioning of these component types, UFLS and UVLS will not respond as expected, and will therefore degrade BES system reliability, particularly during the stressed system conditions for which UFLS and UVLS are installed. Relative to control circuitry, Table 1-5 specifically excludes UFLS and UVLS from maintenance activities relate to the interrupting device trip coil.** **2. This interpretation is not yet approved. When this interpretation is approved, the SDT will incorporate it within PRC-005-2. However, the SDT has made changes to Applicability 4.2.1.** 3. **The recently-balloted revision of the definition of Protection System, which has been approved by the NERC Board of Trustees and will soon be filed with FERC for approval, clearly includes only protective relays that respond to electrical quantities. As for auxiliary relays, the interpretation to which you refer states that they are not explicitly included, but are included to the degree that an entity's Protection System control circuitry addresses them(which has been identified as a reliability gap), and are being added to PRC-005-2 to resolve the gap.**
Segment	6

Organization	Florida Municipal Power Pool
Member	Thomas E Washburn
Comment	the VRF of R1 should be Low since the attached tables are essentially the PSMP.
Response	**Thank you for your comments. The SDT disagrees; the Tables establish the intervals and activities, and Requirement R1 addresses the establishment of an entity's individual PSMP.**
Segment	4
Organization	Fort Pierce Utilities Authority
Member	Thomas W. Richards
Comment	The VRF of R1 should be Low since the attached tables are essentially the PSMP.
Response	**Thank you for your comments. The SDT disagrees; the Tables establish the intervals and activities, and Requirement R1 addresses the establishment of an entity's individual PSMP.**
Segment	1, 3
Organization	Hydro One Networks, Inc.
Member	Ajay Garg, Michael D. Penstone
Comment	Hydro One is casting a negative vote with the following comments: 1. R1 Lower - Include a second part as follows: "Failed to identify calibration tolerances or other equivalent parameters for one Protection System component type that establish acceptable parameters for the conclusion of maintenance activities. " 2. R1 Moderate - Similar wording as for the Lower VSL but catering for two Protection System component types. R1 High - Change the wording of the 3rd part to be similar to the Lower VSL to match the requirement and to cater for more than two Protection System component types.
Response	**Thank you for your comments.** 1. **The SDT has determined that the fundamental concerns of Requirement R1, Part 1.5 and the associated changes are addressed within the PSMP definition, and that Requirement R1, Part 1.5 is not necessary; therefore, it has been removed. Requirement R4 has also been re-drafted to address various related concerns noted within comments. The associated VSL has also been revised. Please see Supplementary Reference Document, Section 8 for a discussion of this.** 2. **Requirement R1 'Moderate' appears to be similar to Requirement R1 'Lower' as you suggest. The SDT believes that, if more than two Protection System component types are not addressed, the 'Severe' VSL is appropriate.**
Segment	5
Organization	Indeck Energy Services, Inc.

Member	Rex A Roehl
Comment	The Violation Risk Factors should not be the same for all registered entities because the risk in a violation by a 20 MW wind farm connected at 115 kV is de minimis compared to that same violation at a 2,000 MW transmission substation or generator. The basic structure of this revision to PRC-005 is totally defective. Combining 4 standards that each have something to do with relays into one omnibus standard was wrongheaded. The Violation Severity Levels need to match the violation and four arbitrary categories cannot do so for the myriad of components, systems and varying numbers of them for one registered entity that are covered by this draft standard.
Response	**Thank you for your comments. The VRFs are not dependent on size, and must be assigned on a requirement-by-requirement basis.**
Segment	2
Organization	Independent Electricity System Operator
Member	Kim Warren
Comment	1. R1 Lower - We suggest including a second part as follows: "Failed to identify calibration tolerances or other equivalent parameters for one Protection System component type that establish acceptable parameters for the conclusion of maintenance activities. " 2. R1 Moderate - We suggest similar to the Lower VSL but catering for two Protection System component types. R1 High - We suggest changing the wording of the 3rd part to match the requirement and to cater for more than two Protection System component types. 3. Editorial Comment to Severe VSL for R3: In part 3, replace "less" with "fewer".
Response	**Thank you for your comments.** **1. The SDT has determined that the fundamental concerns of Requirement R1, Part 1.5 and the associated changes are addressed within the PSMP definition, and that Requirement R1, Part 1.5 is not necessary; therefore, it has been removed. Requirement R4 has also been re-drafted to address various related concerns noted within comments. The associated VSL has also been revised. Please see Supplementary Reference Document, Section 8 for a discussion of this.** **2. Requirement R1 'Moderate' appears to be similar to Requirement R1 'Lower' as you suggest. The SDT believes that, if more than two Protection System component types are not addressed, the 'Severe' VSL is appropriate.** **3. The SDT has elected not to change the VSL for Requirement R3 as suggested.**
Segment	1
Organization	Lake Worth Utilities
Member	Walt Gill

Comment	1. UFLS and UVLS maintenance and testing is greatly expanded, e.g., we interpreted PRC-008/011 as being only the UFLS/UVLS equipment. The new PRC-005 sweeps in other protection system components, e.g., communications (probably not applicable), voltage and current sensing devices (e.g., instrument transformers), Station DC supply, control circuitry. What's key about this is that these components are all part of distribution system protection, so, these activities would not be covered by other BES protection system maintenance and testing. I'm sure we are testing batteries and the like, but, we are probably not testing battery chargers and control circuity, and, in many cases distribution circuits are such that it is very difficult, if not impossible, to test control circuitry to the trip coil of the breaker without causing an outage of the customers on that distribution circuit. There is no real reliability need for this either. Unlike Transmission and Generation Protection Systems which are needed to clear a fault and may only have one or two back-up systems, there are thousands and thousands of UFLS relays and if one fails to operate, it will not be noticeable to the event. It does make sense to test the relays themselves in part to ensure that the regio0nsl UFLS program is being met, but, to test the other protection system components is not worthwhile. Note that DC Supplies and most of the control circuitry of distribution lines are "tested" frequently by distribution circuits clearing faults such as animals, vegetation blow-ins, lightning, etc., on distribution circuits, reducing the value of testing to just about null. However, this version is better than prior versions because it essentially requires the entity to determine it's own period of maintenance and testing for UFLS/UVLS for DC Supply and control circuitry. 2. Applicability, 4.2.1, should reflect the Y&W and Tri-State interpretation (Project 2009-17) of "transmission Protection System" and should state: "Protection Systems applied on, or designed to provide protection for a BES Facility and that trips a BES Facility" 3. Applicability, 4.2. - does not reflect the interpretation of Project 20009-10 that excludes non-electrical protection (e.g., sudden pressure relays) and auxiliary relays. Because the definition of Protection System (recently approved) does not clearly exclude "non-electrical" protection,the Applicability section should. For instance,, a vibration monitor, steam pressure, etc. protection of generators, sudden pressure protection of transformers, etc. should not be included in the standard. An alternative is to change the definition of Protection System to make sure it only includes electrical 4. the VRF of R1 should be Low since the attached tables are essentially the PSMP. 5. Table 1-4 requires a comparison of measured battery internal ohmic value to battery baseline. Since battery manufacturers do not provide this value, it is unclear what the “baseline” values ought to be if an entity recently began performing this test (assuming it’s several years after the commissioning of the battery.) Would it be acceptable for an entity to establish baseline values based on statistical analysis of multiple test results specific to a

	given battery manufacturer and design? 6. Small entities with only one or two BES substations may not have enough components to take advantage of the expanded maintenance intervals afforded by a performance-based maintenance program. Aggregating these components across different entities doesn't seem too logical considering the variations at the sub-component level (wire gauge, installation conditions, etc.) 7. Trip circuits are interconnected to perform various functions. Testing a trip path may involve disabling other features (i.e. breaker failure or reclosing) not directly a part of the test being performed. Temporary modifications made for testing introduce a chance to unknowingly leave functions disabled, contacts shorted, jumpers lifted, etc. after testing has been completed. Trip coils and cable runs from panels to breaker can be made to meet the requirements for monitored components. The only portions of the circuitry where this may not be the case is in the inter and intra-panel wiring. Because such portions of the circuitry have no moving parts and are located inside a control house, the exposure is negligible and should not be covered by the requirements. Entities will be at increased compliance risk as they struggle to properly document the testing of all parallel tripping paths.
Response	**Thank you for your comments.** **1. For UFLS and UVLS, the maintenance activities related to station dc supply and control circuitry are somewhat constrained relative to similar activities for Protection Systems in general. Regardless, without proper functioning of these component types, UFLS and UVLS will not respond as expected, and will therefore degrade BES system reliability, particularly during the stressed system conditions for which UFLS and UVLS are installed. Relative to control circuitry, Table 1-5 specifically excludes UFLS and UVLS from maintenance activities relate to the interrupting device trip coil.** **2. This interpretation is not yet approved. When this interpretation is approved, the SDT will incorporate it within PRC-005-2. However, the SDT has made changes to Applicability 4.2.1.** **3. The recently-balloted revision of the definition of Protection System, which has been approved by the NERC Board of Trustees and will soon be filed with FERC for approval, clearly includes only protective relays that respond to electrical quantities. As for auxiliary relays, the interpretation to which you refer states that they are not explicitly included, but are included to the degree that an entity's Protection System control circuitry addresses them(which has been identified as a reliability gap), and are being added to PRC-005-2 to resolve the gap.** **4. The SDT disagrees; the Tables establish the intervals and activities and Requirement R1 addresses the establishment of an entity's individual PSMP.**

	5. Typical baseline values for various types of lead-acid batteries can be obtained from the test equipment manufacturer, the battery vendor, and perhaps other sources for batteries that are already in service. For new batteries, the initial battery baseline ohmic values should be measured upon installation and used for trending. **6. Entities are not required to use performance-based maintenance programs. Requirement R3 and Attachment A are provided for the use of entities that can (and desire to) avail themselves of this approach.** **7. The requirement relative to control circuitry does not explicitly require trip or functional testing of the entire path; it requires that entities verify all paths without specifying the method of doing so. Please see Section 15.5 of the Supplementary Reference Document for a detailed discussion.**
Segment	1
Organization	Lakeland Electric
Member	Larry E Watt
Comment	The major reasons are that: 1. UFLS and UVLS maintenance and testing is greatly expanded, e.g., we interpreted PRC-008/011 as being only the UFLS/UVLS equipment. The new PRC-005 sweeps in other protection system components, e.g., communications (probably not applicable), voltage and current sensing devices (e.g., instrument transformers), Station DC supply, control circuitry. What's key about this is that these components are all part of distribution system protection, so, these activities would not be covered by other BES protection system maintenance and testing. I'm sure we are testing batteries and the like, but, we are probably not testing battery chargers and control circuity, and, in many cases distribution circuits are such that it is very difficult, if not impossible, to test control circuitry to the trip coil of the breaker without causing an outage of the customers on that distribution circuit. There is no real reliability need for this either. Unlike Transmission and Generation Protection Systems which are needed to clear a fault and may only have one or two back-up systems, there are thousands and thousands of UFLS relays and if one fails to operate, it will not be noticeable to the event. It does make sense to test the relays themselves in part to ensure that the regio0nsl UFLS program is being met, but, to test the other protection system components is not worthwhile. Note that DC Supplies and most of the control circuitry of distribution lines are "tested" frequently by distribution circuits clearing faults such as animals, vegetation blow-ins, lightning, etc., on distribution circuits, reducing the value of testing to just about null. However, this version is better than prior versions because it essentially requires the entity to determine it's own period of maintenance and testing for UFLS/UVLS for DC Supply and control circuitry.

	2. Applicability, 4.2.1, should reflect the Y&W and Tri-State interpretation (Project 2009-17) of "transmission Protection System" and should state: "Protection Systems applied on, or designed to provide protection for a BES Facility and that trips a BES Facility" 3. Applicability, 4.2. - does not reflect the interpretation of Project 20009-10 that excludes non-electrical protection (e.g., sudden pressure relays) and auxiliary relays. Because the definition of Protection System (recently approved) does not clearly exclude "non-electrical" protection,the Applicability section should. For instance,, a vibration monitor, steam pressure, etc. protection of generators, sudden pressure protection of transformers, etc. should not be included in the standard. An alternative is to change the definition of Protection System to make sure it only includes electrical 4. the VRF of R1 should be Low since the attached tables are essentially the PSMP.
Response	**Thank you for your comments.** **1. For UFLS and UVLS, the maintenance activities related to station dc supply and control circuitry are somewhat constrained relative to similar activities for Protection Systems in general. Regardless, without proper functioning of these component types, UFLS and UVLS will not respond as expected, and will therefore degrade BES system reliability, particularly during the stressed system conditions for which UFLS and UVLS are installed. Relative to control circuitry, Table 1-5 specifically excludes UFLS and UVLS from maintenance activities relate to the interrupting device trip coil.** **2. This interpretation is not yet approved. When this interpretation is approved, the SDT will incorporate it within PRC-005-2. However, the SDT has made changes to Applicability 4.2.1.** **3. The recently-balloted revision of the definition of Protection System, which has been approved by the NERC Board of Trustees and will soon be filed with FERC for approval, clearly includes only protective relays that respond to electrical quantities. As for auxiliary relays, the interpretation to which you refer states that they are not explicitly included, but are included to the degree that an entity's Protection System control circuitry addresses them(which has been identified as a reliability gap), and are being added to PRC-005-2 to resolve the gap.** **4. The SDT disagrees; the Tables establish the intervals and activities and Requirement R1 addresses the establishment of an entity's individual PSMP.**
Segment	6
Organization	Lakeland Electric
Member	Paul Shipps

Comment	Small entities with only one or two BES substations may not have enough components to take advantage of the expanded maintenance intervals afforded by a performance-based maintenance program. Aggregating these components across different entities doesn't seem too logical considering the variations at the sub-component level (wire gauge, installation conditions, etc.)
Response	**Thank you for your comments. Entities are not required to use performance-based maintenance programs. Requirement R3 and Attachment A are provided for the use of entities that can (and desire to) avail themselves of this approach.**
Segment	5,6
Organization	Luminant Energy, Luminant Generation Company LLC
Member	Brad Jones, Mike Laney
Comment	Luminant commends the PRC-005-2 Standard Drafting Team for its quality efforts in producing this version of the Standard however; Luminant must cast a negative ballot vote for the present version of the VRFs and VSLs for this Standard. The negative vote against is solely based on the addition of the VSL associated with Requirement R1 Part 1.5.
Response	**Thank you for your comments. The SDT has determined that the fundamental concerns of Requirement R1, Part 1.5 and the associated changes are addressed within the PSMP definition, and that Requirement R1, Part 1.5 is not necessary; therefore, it has been removed. Requirement R4 has also been re-drafted to address various related concerns noted within comments. The associated VSL has also been revised. Please see Supplementary Reference Document, Section 8 for a discussion of this.**
Segment	1,3,6
Organization	Manitoba Hydro
Member	Joe D Petaski, Greg C. Parent, Daniel Prowse
Comment	-The high VSL for R1 "Failed to include all maintenance activities relevant for the identified monitoring attributes specified in Tables 1-1 through 1-5" may be interpreted in different ways and should be further clarified.
Response	**Thank you for your comments. The SDT modified the VSL for clarity.**
Segment	2
Organization	Midwest ISO, Inc.
Member	Jason L Marshall

Comment	1. We disagree with the VRFs for R3, R4, and R5. R3, R4, and R5 are administrative requirements and duplicate to requirements in FAC-008 and FAC-009 that already require communication of facility ratings including those limited by relays. Thus, it should be Lower. 2. We disagree with the High VRF for Requirement R6 because the criteria in attachment will identify circuits that are not critical. If the criteria is modified per our comments on the standard and in the ballot, then we would agree with a High VRF. 3. Requirement R7 should be deleted as it represents double jeopardy. Thus, we do not agree with any VRF for it.
Response	**Thank you for your comments.** **1. It appears that this comment was intended to be offered on some other project, and does not appear relevant to PRC-005-2.** **2. It appears that this comment was intended to be offered on some other project, and does not appear relevant to PRC-005-2.** **3. It appears that this comment was intended to be offered on some other project, and does not appear relevant to PRC-005-2.**
Segment	1
Organization	Nebraska Public Power District
Member	Richard L. Koch
Comment	VRF's: The definition of a Medium Risk Requirement included on page 8 of the SAR states: "A requirement that, if violated, could directly affect the electrical state or the capability of the bulk electric system, or the ability to effectively monitor and control the bulk electric system." 1. The PSMP does not "directly" affect the electrical state or the capability of the bulk electric system. A failure of a Protection System component is required to "directly" affect the BES. Therefore, the PSMP has only an "indirect" affect on the electrical state or the capability of the BES. Requirements R1 through R3 and their subparts are administrative in nature in that they are comprised entirely of documentation. Therefore, I recommend changing the Violation Risk Factor of Requirements R1, R2, and R3 to Lower to be consistent with the Violation Risk Factors defined in the SAR. VSL's: 2. R2: Tables 1-1 through 1-5 refers to time-based maintenance programs. I recommend changing "condition-based" to "time-based" in all four severity levels. 3. SAR Attachment B - Reliability Standard Review Guidelines states that violation severity levels should be based on the following equivalent scores: Lower: More than 95% but less than 100% compliant Moderate: More than 85% but less than or equal to 95% compliant High: More than 70% but less than equal to 85% compliant Severe: 70% or less compliant I recommend revising the percentages of the violation severity levels to be consistent with

	the SAR. 4. R3: The performance-based maintenance program identified in PRC-005 Attachment A provides the requirements to establish the technical justification for the initial use of a performance-based PSMP and the requirements to maintain the technical justification for the ongoing use of a performance-based PSMP. However, it appears the VSLs for Requirement R3 only addresses the ongoing use of the technical justification. I recommend revising the VSLs for R3 to include the initial use of the technical justification. a. Item 2) of R3 Severe VSL is a duplicate of Item 2) of R3 Lower VSL. This item is administrative in nature therefore I recommend deleting Item 2) from R3 Severe VSL. b. The first and third bullets of item 4) of R3 Severe VSL are administrative in nature and should be moved to the Lower VSL c. R4: SAR Attachment B - Reliability Standard Review Guidelines states that violation severity levels should be based on the following equivalent scores: Lower: More than 95% but less than 100% compliant Moderate: More than 85% but less than or equal to 95% compliant High: More than 70% but less than equal to 85% compliant Severe: 70% or less compliant I recommend revising the percentages of the violation severity levels to be consistent with the SAR.
Response	**Thank you for your comments.** **1. Requirements R1, R2, and R3 are not administrative; they are foundational. Without the fundamental development of a PSMP, an entity is unlikely to actually implement a PSMP that satisfies the reliability needs of the BES.** **2. The SDT concluded that Requirement R2 is redundant with Requirement R1, Part 1.4, and has deleted Requirement R2 (together with the associated Measure and VSL).** **3. The guidelines within the SAR have been superseded by subsequent revisions to the VSL Guidelines. The VSLs in the draft standard adhere to the latest VSL Guidelines and to the June 19, 2008 FERC order on VSLs in Docket No RR08-04-000.** **4. Part a – The VSL for Requirement R3 has been modified in consideration of your comments.** **Part b – These requirements are not administrative; they are foundational. Without compliance with these requirements, an entity does not have an effective performance-based PSMP, and may be detrimentally affecting reliability.** **Part c – The latest VSL Guidelines also provide examples of VSLs similar to those in the draft standard.**
Segment	1

Organization	Oncor Electric Delivery
Member	Michael T. Quinn
Comment	Oncor cast a negative ballot vote for the present version of the VRFs and VSLs for this Standard. The negative vote against is solely based on the addition of the VSL associated with Requirement R1 Part 1.5.
Response	**Thank you for your comments. The SDT has determined that the fundamental concerns of Requirement R1, Part 1.5 and the associated changes are addressed within the PSMP definition, and that Requirement R1, Part 1.5 is not necessary; therefore, it has been removed. Requirement R4 has also been re-drafted to address various related concerns noted within comments. The associated VSL has also been revised. Please see Supplementary Reference Document, Section 8 for a discussion of this.**
Segment	6
Organization	Seattle City Light
Member	Dennis Sismaet
Comment	The proposed Standard PRC-005-2 is an improvement over the previous draft in that it provides more consistency in maintenance and testing duration internals. Notwithstanding, two issues are of concern to Seattle City Light such that it is compelled to vote no: 1) the establishment of bookends for standard verification and 2) the implementation timelines for entities with systems where electro-mechanical relays still compose a significant number of components in their protection systems. 1. Bookends: Proposed Standard PRC-005-2 specifies long inspection and maintenance intervals, up to 12 years, which correspondingly exacerbates the so-called “bookend” issue. To demonstrate that interval-based requirements have been met, two dates are needed - bookends. Evidencing an initial date can be problematic for cases where the initial date would occur prior to the effective date of a standard. NERC has provided no guidance on this issue, and the Regions approach it differently. Some, such as Texas Regional Entity, require initial dates beginning on or after the effective date of a Standard. Compliance with intervals is assessed only once two dates are available that occur on or after a standard took effect. Other regions, such as Western Electricity Coordinating Council (WECC), require that entities evidence an initial date prior to the effective date of a standard. For WECC, compliance with intervals is assessed as soon as a standard takes effect. Such variation makes application of standards involving bookends uncertain, arbitrary, capricious, and in the case of WECC, possibly illegal. Proposed Standard PRC-005-2 will be another such standard. Indeed this Standard will involve by far the largest number of bookends of any NERC standard - many thousands for a typical entity. Furthermore, the long inspection and maintenance intervals

	introduced in the draft will require entities in WECC, for instance, to evidence initial bookend dates prior to the date original PRC-005-1 took effect. For the 12-year intervals for CTs and VTs in proposed Standard PRC-005-2, many initial dates will occur prior to the 2005 Federal Power Act that authorized Mandatory Reliability Standards and even reach back before the 2003 blackout that catalyzed the effort to pass the Federal Power Act. As a result, many entities in WECC maybe at risk of being found in violation of proposed Standard PRC-005-2 immediately upon its implementation. Seattle City Light requests that NERC address the bookends issue, either within proposed Standard PRC-005-2 or in a separate, concurrent document. 2. Legacy Systems: Many entities still have legacy protection systems that rely upon electro-mechanical relays. Effective testing approaches differ between electro-mechanical and digital relay systems. Thus, although the proposed standard rightly looks to the future of digital relays by specifying testing and maintenance focused on protection systems as a whole, the proposed implementation timelines create a level of hardship for those utilities with legacy systems. In example, auxiliary relay and trip coil testing may be essential to prove the correct operation of complex, multi-function digital protection systems. However, for legacy systems with single-function electro-mechanical components, the considerable documentation and operational testing needed to implement and track such testing is not necessarily proportional to the relative risk posed by the equipment to the bulk electric system. Performance testing of electro-mechanical systems, particularly regarding control circuits, will require extensive disconnection and reconnection of portions of the circuits. Such activities will likely cause far more problems on restoration-to-service than they will locate and correct. As such, to assist entities in their implementation efforts, we believe provision of alternatives are necessary, such as additional implementation time through phasing and/or through technical feasibility exceptions.
Response	**Thank you for your comments.** **1. This issue has been addressed by NERC in Compliance Application Notice CAN-008 "PRC-005 R2 Pre-June 18 Evidence".** **2. Please see Sections 8 and 15.3 of the Supplementary Reference Document for a discussion on this topic. FERC Order 693 directs that NERC establish requirements for the maintenance of the Protection System and control circuitry is a portion thereof. Therefore, requirements for the maintenance of the control circuitry are necessary and the SDT has developed those requirements in a fashion that affords entities with the opportunity to best meet those requirements.**
Segment	1,3, 3, 3
Organization	Southern Company Services, Inc., Alabama Power, Georgia Power, Mississippi Power
Member	Horace Stephen Williamson, Richard J. Mandes, Anthony L Wilson, Don Horsley

Comment	We disagree with the inclusion of the VSLs, VRFs, and time Horizons associated with the new Requirements 1.5 and 4.2
Response	**Thank you for your comments. The SDT has determined that the fundamental concerns of Requirement R1, Part 1.5 and the associated changes are addressed within the PSMP definition, and that Requirement R1, Part 1.5 is not necessary; therefore, it has been removed. Requirement R4 has also been re-drafted to address various related concerns noted within comments. The associated VSL has also been revised. Please see Supplementary Reference Document, Section 8 for a discussion of this.**
Segment	5
Organization	U.S. Bureau of Reclamation
Member	Martin Bauer P.E.
Comment	The VSL levels are not consistent with the true impact on reliability. Severe levels are assigned for failing to document rather than failing to maintain components. Documentation requirements that are not met should not be assigned a Severe level. The concept of penalizing an entity for failed components without regard to why they failed is unreasonable. The severely levels should be based on avoidable failures or failures that could have been detected if the entity had performed maintenance.
Response	**Thank you for your comments.** **VSLs depict the level to which an entity has failed to comply with the standard; VRFs reflect the risk to the BES. Escalations within the VSLs specifically address more egregious (severe) violations of the standard in accordance with the NERC VSL Guidelines.**

NERC
NORTH AMERICAN ELECTRIC RELIABILITY CORPORATION

Consideration of Comments on Protection System Maintenance [Project 2007-17]

The Protection System Maintenance Drafting Team thanks all commenters who submitted comments on the 3rd draft of the standard for Protection System Maintenance and Testing. These standards were posted for a 30-day public comment period from November 17, 2010 through December 17, 2010. The stakeholders were asked to provide feedback on the standards through a special Electronic Comment Form. There were 44 sets of comments, including comments from more than 81 different people from approximately 82 companies representing 9 of the 10 Industry Segments as shown in the table on the following pages.

http://www.nerc.com/filez/standards/Protection_System_Maintenance_Project_2007-17.html

Extensive changes were made to Requirements R1 and R3 of the Standard, and also to the Tables referenced within the Requirements. Of particular note, Requirement R1, Part 1.5 (which required entities to define their acceptance criteria for maintenance of components), and the associated discussion within Requirement R4, Part 4.2 were removed. Requirement R2 was removed because it was duplicative of Requirement R1, Part 1.4. Also, Table 1-4, addressing maintenance of Station DC Supply, was split into six separate sub-tables addressing the various specific technologies within this component.

Some commenters continued to object to various requirements within the standard. Where the standard was not revised in response to these comments, the SDT explained their rationale within the consideration-of-comments.

Based on the level of consensus on this posting, the SDT will post the Standard and associated documents for an additional 30-day comment period with concurrent ballot in the final 10-days of that comment period.

If you feel that your comment has been overlooked, please let us know immediately. Our goal is to give every comment serious consideration in this process! If you feel there has been an error or omission, you can contact the Vice President and Director of Standards, Herb Schrayshuen, at 609-452-8060 or at herb.schrayshuen@nerc.net. In addition, there is a NERC Reliability Standards Appeals Process.[1]

[1] The appeals process is in the Reliability Standards Development Procedures: http://www.nerc.com/standards/newstandardsprocess.html.

Index to Questions, Comments, and Responses

1. The SDT has restructured the tables to improve clarity, but did not appreciably change the content. Do you agree that the restructured tables are clearer? If not, please provide specific suggestions for improvement….. 9
2. The SDT has modified the VSLs, VRFs and Time Horizons with this posting. Do you agree with the changes? If not, please provide specific suggestions for improvement….. 16
3. The SDT has provided the "Supplementary Reference" document to provide supporting discussion for the Requirements within the standard. Do you have any specific suggestions for improvements?…. 24
4. The SDT has provided the "Frequently-Asked Questions" (FAQ) document to address anticipated questions relative to the standard. Do you have any specific suggestions for improvements?…. 31
5. If you have any other comments on this Standard that you have not already provided in response to the prior questions, please provide them here….....38

Consideration of Comments on Protection System Maintenance [Project 2007-17]

The Industry Segments are:

1 — Transmission Owners
2 — RTOs, ISOs
3 — Load-serving Entities
4 — Transmission-dependent Utilities
5 — Electric Generators
6 — Electricity Brokers, Aggregators, and Marketers
7 — Large Electricity End Users
8 — Small Electricity End Users
9 — Federal, State, Provincial Regulatory or other Government Entities
10 — Regional Reliability Organizations, Regional Entities

Group/Individual		Commenter	Organization	Registered Ballot Body Segment									
				1	2	3	4	5	6	7	8	9	10
1.	Group	David K Thorne	Pepco Holding Inc & Affilates	X									

	Additional Member	Additional Organization	Region	Segment Selection
1.	Carlton Bradshaw	RFC		1
2.	Carl Kinsley	RFC		1
3.	Bob Reuter	RFC		3
4.	Mike Mayer	RFC		3
5.	Jim Petrella	RFC		3

2.	Group	Steve Alexanderson	Pacific Northwest Small Public Power Utility Comment Group			X	X					

	Additional Member	Additional Organization	Region	Segment Selection
1.	Russell Noble	Cowlitz County PUD No. 1	WECC	3, 4, 5
2.	Dave Proebstel	Clallam County PUD	WECC	3
3.	Ronald Sporseen	Blachly-Lane Electric Cooperative	WECC	3
4.	Ronald Sporseen	Central Electric Cooperative	WECC	3
5.	Ronald Sporseen	Consumers Power	WECC	3

Group/Individual		Commenter	Organization		Registered Ballot Body Segment									
					1	2	3	4	5	6	7	8	9	10
6.	Ronald Sporseen	Clearwater Power Company	WECC	3										
7.	Ronald Sporseen	Douglas Electric Cooperative	WECC	3										
8.	Ronald Sporseen	Fall River Rural Electric Cooperative	WECC	3										
9.	Ronald Sporseen	Northern Lights	WECC	3										
10.	Ronald Sporseen	Lane Electric Cooperative	WECC	3										
11.	Ronald Sporseen	Lincoln Electric Cooperative	WECC	3										
12.	Ronald Sporseen	Raft River Rural Electric Cooperative	WECC	3										
13.	Ronald Sporseen	Lost River Electric Cooperative	WECC	3										
14.	Ronald Sporseen	Salmon River Electric Cooperative	WECC	3										
15.	Ronald Sporseen	Umatilla Electric Cooperative	WECC	3										
16.	Ronald Sporseen	Coos-Curry Electric Cooperative	WECC	3										
17.	Ronald Sporseen	West Oregon Electric Cooperative	WECC	3										
18.	Ronald Sporseen	Pacific Northwest Generating Cooperative	WECC	5										
19.	Ronald Sporseen	Power Resources Cooperative	WECC	3										
3.	Group	Dave Davidson	Tennessee Valley Authority		X				X					
	Additional Member	**Additional Organization**	**Region**	**Segment Selection**										
1.	Rusty Hardison	TOM Support	SERC	NA										
2.	Paul Baldwin	TOM Support	SERC	NA										
3.	David Thompson	Hydro Production Engineering	SERC	NA										
4.	Frank Cuzzort	Nuclear Engineering	SERC	NA										
5.	Robert Mares	Fossil Engineering		NA										
4.	Group	Guy Zito	Northeast Power Coordinating Council											X
	Additional Member	**Additional Organization**	**Region**	**Segment Selection**										
1.	Al Adamson	New York State Reliability Council, LLC		10										
2.	Gregory Campoli	New York Independent System Operator	NPCC	2										
3.	Kurtis Chang	Independent Electricity System Operator	NPCC	2										
4.	Chris de Graffenried	Consolidated Edison Co. of New York, Inc.	NPCC	1										
5.	Sylvain Clermont	Hydro-Quebec TransEnergie	NPCC	1										

Group/Individual		Commenter	Organization	Registered Ballot Body Segment									
				1	2	3	4	5	6	7	8	9	10
6.	Gerry Dunbar	Northeast Power Coordinating Council	NPCC 10										
7.	Dean Ellis	Dynegy Generation	NPCC 5										
8.	Brian Evans-Mongeon	Utility Services	NPCC 8										
9.	Mike Garton	Dominion Resources Services, Inc.	NPCC 5										
10.	Brian L. Gooder	Ontario Power Generation Incorporated	NPCC 5										
11.	Kathleen Goodman	ISO - New England	NPCC 2										
12.	Chantel Haswell	FPL Group, Inc.	NPCC 5										
13.	David Kiguel	Hydro One Networks Inc.	NPCC 1										
14.	Michael R. Lombardi	Northeast Utilities	NPCC 1										
15.	Randy MacDonald	New Brunswick System Operator	NPCC 2										
16.	Bruce Metruck	New York Power Authority	NPCC 6										
17.	Lee Pedowicz	Northeast Power Coordinating Council	NPCC 10										
18.	Robert Pellegrini	The United Illuminating Company	NPCC 1										
19.	Si Truc Phan	Hydro-Quebec TransEnergie	NPCC 1										
20.	Saurabh Saksena	National Grid	NPCC 1										
21.	Michael Schiavone	National Grid	NPCC 1										
22.	Peter Yost	Consolidated Edison Co. of New York, Inc.	NPCC 3										
5.	Group	Deborah Schaneman	Platte River Power Authority System Maintenance	X		X		X	X				

Additional Member	Additional Organization	Region	Segment Selection
1.	Scott Rowley	Platte River Power Authority	WECC	1, 3, 5, 6
2.	Gary Whittenberg	Platte River Power Authority	WECC	1, 3, 5, 6
3.	Aaron Johnson	Platte River Power Authority	WECC	1, 3, 5, 6

6.	Group	Mike Garton	Electric Market Policy	X		X		X	X				
7.	Group	Denise Koehn	Bonneville Power Administration	X		X		X	X				

Group/Individual		Commenter	Organization	Registered Ballot Body Segment									
				1	2	3	4	5	6	7	8	9	10
8.	Group	Terry L. Blackwell	Santee Cooper	X		X		X	X				
9.	Group	Mallory Huggins	NERC Staff										
10.	Group	Sam Ciccone	FirstEnergy	X		X		X	X				
11.	Group	Frank Gaffney	Florida Municipal Power Agency	X		X	X	X	X	X			
12.	Group	Kenneth D. Brown	PSEG Companies ("Public Service Enterprise Group Companies")	X		X		X	X				
13.	Group	Carol Gerou	MRO's NERC Standards Review Subcommittee										X
14.	Individual	Brandy A. Dunn	Western Area Power Administration	X									
15.	Individual	Joanna Luong-Tran	TransAlta Centralia Generation Partnership					X					

Group/Individual		Commenter	Organization	Registered Ballot Body Segment									
				1	2	3	4	5	6	7	8	9	10
16.	Individual	Silvia Parada Mitchell	NextEra Energy	X		X		X	X				
17.	Individual	Reza Ebrahimian	City of Austin DBA Austin Energy				X						
18.	Individual	Sandra Shaffer	PacifiCorp	X		X		X	X				
19.	Individual	JT Wood	Southern Company Transmission	X		X							
20.	Individual	Jack Stamper	Clark Public Utilities	X									
21.	Individual	John Bee	Exelon	X				X					
22.	Individual	Joe Petaski	Manitoba Hydro	X		X		X					
23.	Individual	Dan Roethemeyer	Dynegy Inc.					X					
24.	Individual	Darryl Curtis	Oncor Electric Delivery Company LLC	X									
25.	Individual	Michelle D'Antuono	Ingleside Cogeneration LP					X					
26.	Individual	Scott Berry	Indiana Municipal Power Agency				X						
27.	Individual	RoLynda Shumpert	South Carolina Electric and Gas	X		X		X	X				
28.	Individual	Ed Davis	Entergy Services	X		X		X	X				
29.	Individual	Greg Rowland	Duke Energy	X		X		X	X				
30.	Individual	Dale Fredrickson	Wisconsin Electric Power Company			X	X	X					
31.	Individual	Dan Rochester	Independent Electricity System Operator		X								

Group/Individual		Commenter	Organization	Registered Ballot Body Segment									
				1	2	3	4	5	6	7	8	9	10
32.	Individual	Thad Ness	American Electric Power	X		X		X	X				
33.	Individual	Michael Moltane	ITC	X									
34.	Individual	Kathleen Goodman	ISO New England Inc.		X								
35.	Individual	Rick Koch	Nebraska Public Power District	X		X		X					
36.	Individual	Armin Klusman	CenterPoint Energy	X									
37.	Individual	Andrew Pusztai	American Transmission Company	X									
38.	Individual	Eric Salsbury	Consumers Energy			X	X	X					
39.	Individual	Bill Shultz	Southern Company Generation	X		X		X	X				
40.	Individual	Martin Bauer	US Bureau of Reclamation					X					
41.	Individual	Kenneth A. Goldsmith	Alliant Energy				X						
42.	Individual	Martyn Turner	LCRA Transmission Services Corporation	X									
43.	Individual	Terry Harbour	MidAmerican Energy	X		X		X	X				
44.	Individual	Kirit Shah	Ameren	X		X		X	X				

1. The SDT has restructured the tables to improve clarity, but did not appreciably change the content. Do you agree that the restructured tables are clearer? If not, please provide specific suggestions for improvement.

Summary Consideration: Generally, commenters indicated that the rearrangement of the Tables was beneficial. Several commenters questioned the arrangement of Table 1-4 and the SDT responded by revising this Table. A few commenters suggested further rearrangement of the Tables; the SDT observed that there are many potential ways to organize the Tables and declined to adopt these suggestions. The SDT made minor changes to Table 1-3 and Table 2 verbiage based on stakeholder comments.

Organization	Yes or No	Question 1 Comment
Pepco Holding Inc & Affiliates	Yes	
Pacific Northwest Small Public Power Utility Comment Group	Yes	
Tennessee Valley Authority	Yes	
Northeast Power Coordinating Council	No	The wording “Component Type” is not necessary in each title. Just the equipment category should be listed--what is now shown as “Component Type - Protective Relay”, should be Protective Relay. However, Protective Relay is too general a category. Electromechanical relays, solid state relays, and microprocessor based relays should have their own separate tables. So instead of reading Protective Relay in the title, it should read Electromechanical Relays, etc. This will lengthen the standard, but will simplify reading and referring to the tables, and eliminate confusion when looking for information. The “Note” included in the heading is also not necessary. “Attributes” is also not necessary in the column heading, “Component” suffices.
Response: Thank you for your comments. The SDT believes that the table headings are appropriate as reflected in the draft standard.		
Platte River Power Authority System Maintenance	Yes	
Electric Market Policy	Yes	Dominion does not feel that clarity has been added to the tables. 1. A numbering structure should be added to the table for referencing each task prescribed.

Organization	Yes or No	Question 1 Comment
		2. The tables should more clearly designate and separate time based versus performance based tasks. 3. Additionally, Table 1-4 contains, in several places, an activity to "Verify that the station battery can perform as designed by evaluating the measured cell/unit internal ohmic values to station battery baseline." This seems to suggest that each time the batteries are checked, the measured cell/unit internal ohmic value should agree with some baseline value. This appears to be overly prescriptive as the values reading-to-reading should fall within the tolerances established per Requirement R1.5, not equal a baseline. The activities for other component types are not this prescriptive.
Response: Thank you for your comments. **1. The SDT believes that numbering the tasks within the Tables as you suggest would make the Tables more complex and would not add clarity.** **2. Performance-based maintenance requires that the same tasks be completed, but at intervals determined per Attachment A.** **3. The station battery baseline value is up to the entity to determine. Please see Section 15.4.1 of the Supplementary Reference for a discussion of this. The SDT has determined that the fundamental concerns of R1 part 1.5 and the associated changes are addressed within the PSMP definition, and that R1 part 1.5 is not necessary; therefore, it has been removed. Requirement R4 has also been re-drafted to address various related concerns noted within comments. The associated VSL has also been revised. Please see Supplementary Reference Document, Section 8 for a discussion of this.**		
Bonneville Power Administration	Yes	
Santee Cooper	Yes	
NERC Staff	Yes	
FirstEnergy	Yes	While we agree that the clarity of the tables has improved, there are still items that warrant further clarity. 1.In Table 1-1, references to "Verify acceptable measurement of power system input values" is made for microprocessor relays on 6 and 12 calendar year intervals. Wouldn't this also be prudent on non-microprocessor based relays as well on the 6 year interval? 2. Also, in Table 1-3, "Verify that acceptable measurement of the current and voltage signals are received by the protective relays" is shown on a 12 calendar year interval. What is the difference between this activity and the similar activity performed in Table 1-1? 3. In Table 1-4, this table is complex and the detailed maintenance activities in this particular table is puzzling when compared to the more generic detail in the other tables within this section. For example, an incorrect operation due to a deteriorated signal from a CT or VT has a higher probability than a failure of a battery bank

Organization	Yes or No	Question 1 Comment
		to perform when called upon. 4. In Table 1-5, Please provide clarity on the "Unmonitored Control circuitry associated with protective functions" component attribute. This would most likely be an FAQ item.
Response: Thank you for your comments. **1. For non-microprocessor relays, this activity is fundamentally performed as a part of the calibration process.** **2. This activity is used to verify the performance of the voltage and current sensing devices, where the activity in Table 1-1 is used to verify that the protective relay is performing properly. In some cases, the activity in Table 1-1 may also serve to satisfy the requirement in Table 1-3.** **3. Table 1-4 is more detailed than the other tables because of the variability in the technologies of the station dc supply.** **4. The draft definition of Protection System establishes "Control circuitry" as "…control circuitry associated with protective functions through the trip coil(s) of the circuit breakers or other interrupting devices". Please see Section 15.3 of the Supplementary Reference for a discussion of this.**		
Florida Municipal Power Agency	Yes	
PSEG Companies ("Public Service Enterprise Group Companies")	Yes	
MRO's NERC Standards Review Subcommittee	Yes	
Western Area Power Administration	Yes	
TransAlta Centralia Generation Partnership	Yes	
NextEra Energy	Yes	
City of Austin DBA Austin Energy		
PacifiCorp	Yes	

Organization	Yes or No	Question 1 Comment
Southern Company Transmission	Yes	The Standard Drafting Team should be commended for making the tables much easier to understand
Response: Thank you for your support.		
Clark Public Utilities	No	The SDT has greatly improved the clarity of this document in the areas of relays, communication systems, voltage and current sensing devices, control circuitry, and alarming paths. The recommendations on station dc supply are still confusing. First, there are five different attribute categories for unmonitored dc supply. Are these five categories mutually exclusive? Are we supposed to follow just the category applicable to the type of battery? Are we supposed to follow the first category and any of the subsequent four battery type categories as they apply? I suspect some of the 3 month and 18 month items in the first category are considered to be necessary by the SDT regardless of battery type. The current categorization is confusing. If we are required to perform the 3 month and 18 month activities listed in the first category regardless of battery type AS WELL AS the other applicable battery type activities, please indicate this in Table 1-4. As a different option, just eliminate the first category entirely and place the appropriate 3 month and 18 month verification and inspection requirements in the four battery type specific categories. It may be repetitive but clarity is paramount in this standard. Second, the FAQ examples seem to indicate that the SDT views the performance of an internal ohmic battery test or a battery performance test as valid forms for verifying the individual battery cell states (i.e. state of charge of the individual battery cells/units, battery continuity, battery terminal connection resistance, and battery internal cell-to-cell or unit-to-unit connection resistance). It would be helpful if this were more obviously stated in table 1-4. Currently it could be interpreted that we need to do all of the individual cell-cell verification in addition to the ohm test or the full performance test. I don't believe this is the intent of the SDT (based on the FAQ examples) but we need to see the intent in Table 1-4.Third, does a monitored dc supply have to monitor some or all of each of the different line items listed? The FAQ examples indicate that if only some are monitored, the dc supply can still be treated as monitored as long as the unmonitored items are verified. This means that for a VLA battery with a low voltage alarm and unintentional ground alarm, all that is needed is to check electrolyte level every 3 months, check float voltage and battery rack every 18 months and perform either an internal ohm check at 18 months or a battery performance test at 6 years. Also battery alarms need to be verified at 6 years. This is not clear in Table 1-4 and it could be interpreted by some that a monitored station dc supply monitors ALL of the listed items not just SOME. The FAQs imply that partial monitoring is acceptable but Table 1-4 does not indicate this very clearly. I do wish to say once again that this proposed standard is much easier to understand and that with a little more clarification in the dc supply section I would vote in the affirmative.
Response: Thank you for your comments. Table 1-4 has been modified in consideration of your comments. Specifically, Table 1-4 has been revised to		

Organization	Yes or No	Question 1 Comment
remove "state of charge" from the activities.		
Exelon		
Manitoba Hydro	No	The maintenance requirements for batteries listed in Table 1-4 do not appear to be consistent with example 1 in Section V, 1A of the FAQ. Specifically the FAQ does not mention the state of charge of the individual battery cells/units, the battery continuity, the battery terminal connection resistance, the battery internal cell-to-cell or unit-to-unit connection resistance, or the cell condition, which are indicated as 18 month interval tasks in table 1-4.
Response: Thank you for your comments. The SDT decided to eliminate the FAQ document and incorporate the FAQ's contents into the Supplementary Reference Document as appropriate. The SDT considered your comments during this activity. Table 1-4 has been revised to remove "state of charge" from the activities.		
Dynegy Inc.	Yes	
Oncor Electric Delivery Company LLC	Yes	
Ingleside Cogeneration LP	Yes	The tables clearly tie to each component type in a Protection System. This is consistent with the required PSMP format, making it straight forward to incorporate the intervals and to demonstrate compliance.
Response: Thank you for your support.		
Indiana Municipal Power Agency	Yes	
South Carolina Electric and Gas	Yes	
Entergy Services	No	The tables are generally much clearer and the SDT is to be commended on their efforts. However, we believe the Alarming Point Table needs additional clarification with regard to the Maximum Maintenance Interval. If an "alarm producing device" is considered to be a device such as an SCADA RTU, individual entity intervals for such a device would differ, and there isn't necessarily a maximum interval established as there is for Protection System components. Also, if an entity's alarm producing device maintenance is performed in sections and triggered by segment or component maintenance, there would essentially be multiple maximum intervals for the alarm producing

Organization	Yes or No	Question 1 Comment
		device of that entity. On that basis, we suggest the interval verbiage be revised to "When alarm producing device or system is verified, or by sections as per the monitored component/protection system specified maximum interval as applicable". Alternately, if the intention is to establish maximum intervals as simply being no longer than the individual component maintenance intervals as we suggest for inclusion above, then the verbiage should be revised to "When alarm producing component/protection system segment is verified". In either case are we to interpret monitored components with attributes which allow for no periodic maintenance specified as not requiring periodic alarm verification?
Response: Thank you for your comments. For clarity, the 'Maximum Maintenance Interval' column entry in Table 2 has been revised to state, "When alarm producing Protection System component is verified".		
Duke Energy	Yes	
Wisconsin Electric Power Company	Yes	
Independent Electricity System Operator		
American Electric Power	No	1. Table 1.5 (Control Circuitry), row 4, indicates a maximum interval of 12 years for unmonitored control circuitry, yet other portions of control circuitry have a maximum interval of 6 years. AEP does not understand the rationale for the difference in intervals, when in most cases, one verifies the other. 2. Also, unmonitored control circuitry is capitalized in row 4 such that it infers a defined term. 3. In the first row of table 1-4 on page 16, it is difficult to determine if it is a cell that wraps from the previous page or is a unique row. This is important because the Maximum Maintenance Intervals are different (i.e. 18 months vs. 6 years). It is difficult to determine to which elements the 6 year Maximum Maintenance Interval applies. 4. AEP suggests repeating the heading "Monitored Station dc supply (excluding UFLS and UVLS) with: Monitor and alarm for variations from defined levels (See Table 2):" for the bullet points on this page.
Response: Thank you for your comments. **1. The 6-year activities are all related to components with "moving parts", and the 12-year activities are related to the other portions of the control**		

Organization	Yes or No	Question 1 Comment
circuitry. **2. The capitalized term has been corrected.** **3. Table 1-4 has been modified in consideration of your comments.** **4. Table 1-4 has been modified in consideration of your comments.**		
ITC	Yes	The following question concerns Table 1-3. 1. Our testing program includes "impedance testing" of the current transformers (CTs) along with insulation testing of the wiring and CT secondary. Impedance testing involves impressing an increasing voltage on the secondary of the CT (with primary open circuited) until 1 (one) ampere flows. This method determines the "knee" of the saturation curve that is used as a benchmark for comparison to previous testing and other CTs. This procedure has successfully identified CT problems over the past several decades. We believe this procedure to be adequate. Does the SDT agree that this method is sufficient to meet the testing requirements of Table 1-3 and that a current comparison is not needed in addition to this testing? 2. Another variation of this is for voltage device compliance. Table 1-3 indicates that we should verify the correct voltages are received by the relay. This means that the VT would need to be energized and we would measure the secondary voltages to compare with others. Power plant relay testing is normally performed during plant outages when this measurement cannot be done. Some plants do not allow any testing while the unit is on line. It would seem that the standard would be written to allow some other type of testing to be performed other than the measurement test. 3. For Table 1-1 Row 1, we believe the intent is to verify that settings are as specified for non-microprocessor relays and microprocessor relays alike. If this is the case, consider adding "Verify that settings are as specified" as a bullet under the headings for non-microprocessor relays and microprocessor relays. 4. Splitting the tables into separate sections for Protective Relays, Communication Systems, VT and CTs, and Station D.C. Supply helped the clarity.
Response: Thank you for your comments. **1. Table 1-3 has been revised in consideration of your comments. Also, please see Section 15.3 of the Supplementary Reference Document. The SDT has decided to eliminate the FAQ and incorporate topics and discussion from the FAQ within the Supplementary Reference Document. Your comments will be considered within that activity.** **2. Table 1-3 has been revised in consideration of your comments. Also, please see Section 15.3 of the Supplementary Reference Document. The SDT has decided to eliminate the FAQ and incorporate topics and discussion from the FAQ within the Supplementary Reference Document. Your comments will be considered within that activity.**		

Organization	Yes or No	Question 1 Comment
3. "Verify that settings are as specified" is specified as an activity that applies to all Protective Relays, regardless of technology. The SDT has decided to eliminate the FAQ and incorporate topics and discussion from the FAQ within the Supplementary Reference Document. Your comments will be considered within that activity. **4. Thank you for your support.**		
ISO New England Inc.	No	The wording "Component Type" is not necessary in each title. Just the equipment category should be listed--what is now shown as "Component Type - Protective Relay", should be Protective Relay. However, Protective Relay is too general a category. Electromechanical relays, solid state relays, and microprocessor based relays should have their own separate tables. So instead of reading Protective Relay in the title, it should read Electromechanical Relays, etc. This will lengthen the standard, but will simplify reading and referring to the tables, and eliminate confusion when looking for information. The "Note" included in the heading is also not necessary. "Attributes" is also not necessary in the column heading, "Component" suffices.
Response: Thank you for your comments. The SDT believes that the table headings are appropriate as reflected in the draft standard.		
Nebraska Public Power District	Yes	
CenterPoint Energy	Yes	
American Transmission Company	Yes	
Consumers Energy	Yes	
Southern Company Generation	Yes	
US Bureau of Reclamation		No Comment
Alliant Energy	Yes	
LCRA Transmission Services Corporation	No	1. It would help to add a column to the left labeled Category. I.E. a relay could be classified under Category 1 attributes unmonitored or Cat 2, Cat 3. 2. Table 1-4, Station DC is very difficult to follow.

Organization	Yes or No	Question 1 Comment
Response: Thank you for your comments. **1. The SDT believes that the table headings are appropriate as reflected in the draft standard.** **2. Table 1-4 has been modified in consideration of your comments.**		
MidAmerican Energy	Yes	
Ameren	Yes	
Xcel Energy	Yes	

2. The SDT has modified the VSLs, VRFs and Time Horizons with this posting. Do you agree with the changes? If not, please provide specific suggestions for improvement.

Summary Consideration: Several commenters objected to the "percentage" steps in several VSLs. The SDT observes that the 'percentage' steps follow the VSL Guidelines which can be found on the NERC website in the 'Resource Documents' area of the 'Reliability Standards' section. Other commenters requested that the VSLs permit some level of non-compliance before incurring a 'Low' VSL, again the SDT notes that this is not acceptable per the VSL Guidelines.

Organization	Yes or No	Question 2 Comment
Pepco Holding Inc & Affiliates	Yes	
Pacific Northwest Small Public Power Utility Comment Group	Yes	
Tennessee Valley Authority	No	1. There is no allowance for deferral of maintenance because of factors beyond the control of the TO, GO, or DP. These include the unavailability of customer outages, generation outages, system configuration, high risk of loss of generation or customer load or impact to power quality. Proposed Change: Provide a process for acceptable deferral of maintenance activities. 2. Table 1-4 The requirement to perform cell internal ohmic resistance measurements every 18 months for vented lead-acid batteries is excessive. Our normal battery life is 20+ years. A 3-year internal resistance test frequency is adequate to prove battery integrity. IEEE 1188 recommends verification of internal ohmic resistance to be on a quarterly basis. It appears other intervals take into account recommended inspection interval plus some grace period. Proposed Change: Change maintenance interval from 3 months to 6 months. 3. Section: R1.5 This new requirement will require significant documentation with no known improvement to the reliability of the BES. What data is being used to determine the need for this requirement? How far does this requirement go? 4. Table 1-4 requires the inspection of "physical condition of battery rack" What are "identify calibration tolerance or other equivalent parameters" for this task? You already have verified, test, inspect, and calibrate defined. Leave out R1.5 which requires more than meeting the definitions.
Response: Thank you for your comments.		

Organization	Yes or No	Question 2 Comment
1. FERC Order 693 directs NERC to establish maximum allowable intervals. A "deferral process" would not satisfy this directive. **2. The SDT disagrees, and believes that 18-months is the proper interval for this activity.** **3. The SDT has determined that the fundamental concerns of R1 part 1.5 and the associated changes are addressed within the PSMP definition, and that Requirement R1, Part 1.5 is not necessary; therefore, it has been removed. Requirement R4 has also been re-drafted to address various related concerns noted within comments. Please see Supplementary Reference Document, Section 8 for a discussion of this. The associated VSL has also been revised.** **4. The SDT has determined that the fundamental concerns of R1 part 1.5 and the associated changes are addressed within the PSMP definition, and that Requirement R1, Part 1.5 is not necessary; therefore, it has been removed. Requirement R4 has also been re-drafted to address various related concerns noted within comments. The associated VSL has also been revised. Please see Supplementary Reference Document, Section 8 for a discussion of this.**		
Northeast Power Coordinating Council	No	1. Because all the requirements deal with protective system maintenance and testing, violations could directly cause or contribute to bulk electric system instability, etc., the VRFs should all be "High". 2. The Time Horizons should all be "Operations Planning" because of the immediacy of a failure to meet the requirements. 3. For the R1 Lower VSL, include a second part to read: Failed to identify calibration tolerances or other equivalent parameters for one Protection System component type that establish acceptable parameters for the conclusion of maintenance activities. For the R1 Moderate VSL, suggest similar wording as for the Lower VSL but specifying two Protection System component types. For the R1 High VSL, suggest changing the wording of the 3rd part to be similar to the Lower VSL to match the requirement and to cater for more than two Protection System component types. 4. For the R3 Severe VSL, in part 3, replace "less" with fewer.
Response: Thank you for your comments. **1. Consideration of the VRFs, in association with the VRF Guidelines, yields the VRFs as established within the draft Standard.** **2. The SDT has reviewed the time horizons, and feels that R1 is properly assigned a Long-Term Planning time horizon, as the activities to develop a program and to determine the monitoring attributes of components is performed within the related time period. The SDT had concluded that Requirement R2 is redundant with Requirement R1, Part 1.4, and has deleted R2 (together with the associated Measure and VSL).** **3. The SDT has determined that the fundamental concerns of R1 part 1.5 and the associated changes are addressed within the PSMP definition, and that Requirement R1, Part 1.5 is not necessary; therefore, it has been removed. The associated VSL has also been revised.** **4. The SDT believes that your suggestion is similar to the existing text, and declines to modify the standard.**		

Organization	Yes or No	Question 2 Comment
Platte River Power Authority System Maintenance	No	The 5%, 10%, and 15% levels for R2 & R4 exaggerate the severity levels for small companies. A small DP with only 9 relays in a protection system would only have to be missing 1 record for a severe VSL.
Response: Thank you for your comments. The percentage levels for Requirement R4 are consistent with many other NERC Standards and are also consistent with the guidance within the VSL Guidelines. The SDT concluded that Requirement R2 was redundant with Requirement R1, Part 1.4, and deleted Requirement R2 (together with the associated Measure and VSL).		
Electric Market Policy	No	VSL R3. How do you measure a percentage of countable events over a period of time? How are you to determine what the total population to be considered? An entity should not be penalized if they are following their program, correcting issues, and documenting all actions, even if there is a high failure rate in an instance.
Response: Thank you for your comments. Attachment A, to which Requirement R3 refers, specifies that countable events are assessed on the basis of " for the greater of either the last 30 components maintained or all components maintained in the previous year."		
Bonneville Power Administration	Yes	
Santee Cooper		
NERC Staff		
FirstEnergy	No	The VSL for R2 need to be adjusted since "Condition Based Maintenance" has been removed from the standard.
Response: Thank you for your comments. The SDT concluded that Requirement R2 was redundant with Requirement R1, Part 1.4, and deleted Requirement R2 (together with the associated Measure and VSL).		
Florida Municipal Power Agency	No	The VRF of R1 should be Low since the attached tables are essentially the PSMP.
Response: Thank you for your comments. The SDT disagrees; the Tables establish the intervals and activities, and Requirement R1 addresses the establishment of an entities' individual PSMP.		
PSEG Companies ("Public Service Enterprise Group Companies")		No comment

Organization	Yes or No	Question 2 Comment
MRO's NERC Standards Review Subcommittee	Yes	
Western Area Power Administration	Yes	
TransAlta Centralia Generation Partnership	No	Please provide acronyms list and its explanations in the standard.
Response: Thank you for your comments. In accordance with established NERC custom, acronyms are either established at the first use of the term, or are general acronyms used throughout NERC Standards.		
NextEra Energy	Yes	
City of Austin DBA Austin Energy		
PacifiCorp	Yes	
Southern Company Transmission	No	We disagree with the inclusion of the VSLs, VRFs, and time Horizons associated with the new Requirements 1.5 and 4.2
Response: Thank you for your comments. The SDT determined that the fundamental concerns of Requirement R1, Part 1.5 and the associated changes are addressed within the PSMP definition, and that Requirement R1, Part 1.5 is not necessary; therefore, it has been removed. Requirement R4 has also been re-drafted to address various related concerns noted within comments. The associated VSL has also been revised.		
Clark Public Utilities	Yes	
Exelon		
Manitoba Hydro	No	The high VSL for R1 “Failed to include all maintenance activities relevant for the identified monitoring attributes specified in Tables 1-1 through 1-5” may be interpreted in different ways and should be further clarified.
Response: Thank you for your comments. The SDT does not understand your concern; further details are needed.		

Organization	Yes or No	Question 2 Comment
Dynegy Inc.	No	For R4, the VRF has been changed to high. We question the need to change to high since there are numerous elements that will still protect the system while repairs are being made.
Response: Thank you for your comments. Requirement R4 addresses implementation of the overall PSMP; that is – maintaining all devices within the program. This VRF is consistent with the "high" assigned to R2 of PRC-005-1.		
Oncor Electric Delivery Company LLC	No	Oncor strongly disagrees with the modification to the Violation Severity Levers (VSL) table under the High VSL column where it states that it is a high VSL for "Failed to establish calibration tolerance or equivalent parameters to determine if components are within acceptable parameters." Oncor feels modifying the standard by adding a requirement that requires a Transmission Owner, Generation Owner or Distribution Provider to "identify calibration tolerances or other equivalent parameters for each Protection System component type that establish acceptable parameters for the conclusion of maintenance activities" is too intrusive and divisive for what it brings to the reliability of the BES. The requirement (Requirement R1 part 1.5) and its associated High VSL should be removed from PRC-005-2.
Response: Thank you for your comments. The SDT has determined that the fundamental concerns of Requirement R1, Part 1.5 and the associated changes are addressed within the PSMP definition, and that Requirement R1, Part 1.5 is not necessary; therefore, it has been removed. Requirement R4 has also been re-drafted to address various related concerns noted within comments. The associated VSL has also been revised.		
Ingleside Cogeneration LP		
Indiana Municipal Power Agency	No	IMPA does not agree with the percentage in the VSL table for R4. For smaller entities that have six or less of any one type of Protection System Component and they fail, for whatever reason (even if it's a matter of incomplete documentation), to complete scheduled program maintenance on that component they will be subjected to the severe VSL penalty Matrix. Consideration should be given to entities having less than say, 100 of a component. There should be some type of tiered sub table within the VSL matrix for this consideration - registered entities having a certain component in quantities greater than or equal to 100 and registered entities having quantities of that certain component of less than 100.
Response: Thank you for your comments. The percentage levels within Requirement R4 are consistent with many other NERC Standards, and are also consistent with the guidance within the VSL Guidelines. The SDT concluded that Requirement R2 was redundant with Requirement R1, Part 1.4, and deleted Requirement R2 (together with the associated Measure and VSL).		
South Carolina Electric and Gas	Yes	

Organization	Yes or No	Question 2 Comment
Entergy Services	No	R1.5 calls for "identification of calibration tolerances or equivalent parameters..." whereas the associated VSL references "failure to establish calibration criteria...." and is listed as high. If R1.5 is to be included in this standard, then we suggest the severity level of a failure to simply "identify" or document such calibration tolerances would be analogous to the severity level(s) of a "failure to specify one (or the severity level should be consistent with the other elements of R1. Both cases appear to be more of a documentation issue as opposed to a failure to implement. Shouldn't a failure to implement any necessary calibration tolerance be accounted for in R4?
Response: Thank you for your comments. The SDT has determined that the fundamental concerns of Requirement R1, Part 1.5 and the associated changes are addressed within the PSMP definition, and that Requirement R1, Part 1.5 is not necessary; therefore, it has been removed. Requirement R4 has also been re-drafted to address various related concerns noted within comments. The associated VSL has also been revised.		
Duke Energy	No	1. R1.3 appears to be missing from the VSL for R1. 2. Also, it's unclear to us what the expectation is for compliance documentation for "monitoring attributes and related maintenance activities" in R1.4 and "calibration tolerances or other equivalent parameters" in R1.5. This is fairly straightforward for relays, but not for other component types. 3. R4 - More clarity must be provided on the expectation for compliance documentation. This is a High VRF requirement, and there may only be a small number of maintenance-correctable items, hence a significant exposure to an extreme penalty.
Response: Thank you for your comments. **1. The High VSL for Requirement R1 has been revised in consideration of your comment.** **2. The SDT concluded that Requirement R2 was redundant with Requirement R1, Part 1.4, and deleted R2 (together with the associated Measure and VSL).** **3. Examples of compliance documentation are included within Measure M4 and discussed within Section 15.7 of the Supplementary Reference Document.**		
Wisconsin Electric Power Company		
Independent Electricity System Operator	No	1. R1 Lower - We suggest including a second part as follows: "Failed to identify calibration tolerances or other equivalent parameters for one Protection System component type that establish acceptable parameters for the conclusion of maintenance activities. "

Organization	Yes or No	Question 2 Comment
		2. R1 Moderate - We suggest similar to the Lower VSL but catering for two Protection System component types.R1 High - We suggest changing the wording of the 3rd part to match the requirement and to cater for more than two Protection System component types. 3. Editorial Comment to Severe VSL for R3: In part 3, replace “less” with “fewer”.
Response: Thank you for your comments. **1. The SDT has determined that the fundamental concerns of Requirement R1, Part 1.5 and the associated changes are addressed within the PSMP definition, and that Requirement R1, Part 1.5 is not necessary; therefore, it has been removed. The associated VSL has also been revised.** **2. The ‘Moderate’ VSL for Requirement R1 appears to be similar to the ‘Lower’ VSL for Requirement R1 as you suggest. The SDT believes that, if more than two Protection System component types are not addressed, the ‘Severe’ VSL is appropriate.** **3. Thank you. The SDT elected not to change the VSL for Requirement R3 as suggested.**		
American Electric Power	No	1. The VSL table should be revised to remove the reference to the Standard Requirement 1.5 in the R1 “High” VSL. 2. All four levels of the VSL for R2 make reference to a “condition-based PSMP.” However, no where in the standard is the term “condition-based” used in reference to defining ones PSMP. The VSL for R2 should be revised to remove reference to a condition-based PSMP; alternatively the Standard could be revised to include the term “condition-based” within the Standard Requirements and Table 1. 3. In multiple instances, Table 1 uses the phrase “No periodic maintenance specified” for the Maximum Maintenance Interval. Is this intended to imply that a component with the designated attributes is not required to have any periodic maintenance? If so, the wording should more clearly state “No periodic maintenance required” or perhaps “Maintain per manufacturers recommendations.” Failure to clearly state the maintenance requirement for these components leaves room for interpretation on whether a Registered Entity has a maintenance and testing program for devices where the Standard has not specified a periodic maintenance interval and the manufacturer states that no maintenance is required.
Response: Thank you for your comments. **1. The SDT has determined that the fundamental concerns of Requirement R1, Part 1.5 and the associated changes are addressed within the PSMP definition, and that Requirement R1, Part 1.5 is not necessary; therefore, it has been removed. The associated VSL has also been revised.** **2. The SDT concluded that Requirement R2 is redundant with R1, Part 1.4, and deleted Requirement R2 (together with the associated Measure and VSL).** **3. If the indicated monitoring attributes are present, no “hands-on” periodic maintenance is required, as the monitoring of the component is**		

Organization	Yes or No	Question 2 Comment
providing a continuing indication of its functionality.		
ITC	Yes	
ISO New England Inc.	No	1. Because all the requirements deal with protective system maintenance and testing, violations could directly cause or contribute to bulk electric system instability, etc., the VRFs should all be "High". 2. The Time Horizons should all be "Operations Planning" because of the immediacy of a failure to meet the requirements. 3. For the R1 Lower VSL, include a second part to read: Failed to identify calibration tolerances or other equivalent parameters for one Protection System component type that establish acceptable parameters for the conclusion of maintenance activities. 4. For the R1 Moderate VSL, suggest similar wording as for the Lower VSL but specifying two Protection System component types. 5. For the R1 High VSL, suggest changing the wording of the 3rd part to be similar to the Lower VSL to match the requirement and to cater for more than two Protection System component types. 6. For the R3 Severe VSL, in part 3, replace "less" with fewer.
Response: Thank you for your comments. **1. The SDT set the VRFs in accordance with the FERC's and NERC's VRF guidance.** **2. The SDT has reviewed the time horizons, and feels that Requirement R1 is properly assigned a Long-Term Planning time horizon, as the activities to develop a program and to determine the monitoring attributes of components is performed within the related time period. The SDT concluded that Requirement R2 was redundant with Requirement R1, Part 1.4, and deleted Requirement R2 (together with the associated Measure and VSL).** **3. The SDT has determined that the fundamental concerns of Requirement R1, Part 1.5 and the associated changes are addressed within the PSMP definition, and that Requirement R1, Part 1.5 is not necessary; therefore, it has been removed. The associated VSL has also been revised.** **4. The 'Moderate' VSL for Requirement R1 appears to be similar to the 'Lower' VSL for Requirement R1 as you suggest.** **5. The SDT believes that, if more than two Protection System component types are not addressed, the 'Severe' VSL is appropriate.** **6. The SDT believes that your suggestion is similar to the existing text, and declines to modify the standard.**		
Nebraska Public Power District	No	VRF's: 1. The definition of a Medium Risk Requirement included on page 8 of the SAR states: "A requirement that,

Organization	Yes or No	Question 2 Comment
		if violated, could directly affect the electrical state or the capability of the bulk electric system, or the ability to effectively monitor and control the bulk electric system." The PSMP does not "directly" affect the electrical state or the capability of the bulk electric system. A failure of a Protection System component is required to "directly" affect the BES. Therefore, the PSMP has only an "indirect" affect on the electrical state or the capability of the BES. Requirements R1 through R3 and their subparts are administrative in nature in that they are comprised entirely of documentation. Therefore, I recommend changing the Violation Risk Factor of Requirements R1, R2, and R3 to Lower to be consistent with the Violation Risk Factors defined in the SAR. VSL's: 2. R2: Tables 1-1 through 1-5 refers to time-based maintenance programs. I recommend changing "condition-based" to "time-based" in all four severity levels. 3. SAR Attachment B - Reliability Standard Review Guidelines states that violation severity levels should be based on the following equivalent scores: Lower: More than 95% but less than 100% compliant Moderate: More than 85% but less than or equal to 95% compliant High: More than 70% but less than equal to 85% compliant Severe: 70% or less complaint recommend revising the percentages of the violation severity levels to be consistent with the SAR. 4. R3: The performance-based maintenance program identified in PRC-005 Attachment A provides the requirements to establish the technical justification for the initial use of a performance-based PSMP and the requirements to maintain the technical justification for the ongoing use of a performance-based PSMP. However, it appears the VSLs for Requirement R3 only addresses the ongoing use of the technical justification. a. I recommend revising the VSLs for R3 to include the initial use of the technical justification. Item 2) of R3 Severe VSL is a duplicate of Item 2) of R3 Lower VSL. This item is administrative in nature therefore I recommend deleting Item 2) from R3 Severe VSL. b. The first and third bullets of item 4) of R3 Severe VSL are administrative in nature and should be moved to the Lower VSL c. R4: SAR Attachment B - Reliability Standard Review Guidelines states that violation severity levels should be based on the following equivalent scores: Lower: More than 95% but less than 100% compliant Moderate: More than 85% but less than or equal to 95% compliant High: More than 70% but less than equal to 85% compliant Severe: 70% or less complaint recommend revising the percentages of the violation severity levels to be consistent with the SAR.

Organization	Yes or No	Question 2 Comment
Response: Thank you for your comments. **1. Requirements R1, R2, and R3 are not administrative; they are foundational. Without the fundamental development of a PSMP, an entity is unlikely to actually implement a PSMP that satisfies the reliability needs of the BES. The SDT had concluded that Requirement R2 is redundant with Requirement R1, Part 1.4, and deleted Requirement R2 (together with the associated Measure and VSL).** **2. The SDT concluded that Requirement R2 is redundant with Requirement R1, Part 1.4, and deleted Requirement R2 (together with the associated Measure and VSL).** **3. The guidelines within the SAR have been superseded by subsequent revisions to the VSL Guidelines. The VSLs in the draft standard adhere to the latest VSL Guidelines and to the June 19, 2008 FERC order on VSLs in Docket No RR08-04-000.** **4. Part a – The VSL for Requirement R3 has been modified in consideration of your comments.** **Part b – These requirements are not administrative; they are foundational. Without compliance with these requirements, an entity does not have an effective performance-based PSMP, and may be detrimentally affecting reliability.** **Part c – The latest VSL Guidelines also provide examples of VSLs similar to those in the draft standard.**		
CenterPoint Energy		
American Transmission Company	Yes	
Consumers Energy	Yes	
Southern Company Generation	Yes	
US Bureau of Reclamation	Yes	The tables rely on a reference document which is not a part of the standard and as such may be altered without due process. Either the relevant text from the reference needs to be inserted into the standard or the reference itself incorporated into the standard. Specific References such as
Response: Thank you for your comments. The Tables do not provide a reference to either the Supplementary Reference Document. An entity must comply with the standard when approved. The reference documents provide additional explanation, discussion, and rationale, but are not part of the mandatory standard. Since the reference documents are being developed to accompany the standard, the NERC Standard Development Procedure requires that they be posted with the draft standard and undergo stakeholder review, both initially and with any revision of the standard.		
Alliant Energy	Yes	

Organization	Yes or No	Question 2 Comment
LCRA Transmission Services Corporation	Yes	
MidAmerican Energy	Yes	
Ameren	No	(1)The Lower VSL for all Requirements should begin above 1% of the components. For example for R4: "Entity has failed to complete scheduled program on 1% to 5% of total Protection System components." PRC-005-2 unrealistically mandates perfection without providing technical justification. A basic premise of engineering is to allow for reasonable tolerances, even Six Sigma allows for defects. Requiring perfection may well harm reliability in that valuable resources will be distracted from other duties.
Response: Thank you for your comments. The NERC criteria for VSLs do not currently permit them to allow some level of non-performance without being in violation.		
Xcel Energy	Yes	

3. The SDT has provided the "Supplementary Reference" document to provide supporting discussion for the Requirements within the standard. Do you have any specific suggestions for improvements?

Summary Consideration: Some commenters questioned whether the Supplementary Reference Document was a part of the Standard and thus mandatory and enforceable; the SDT responded that this document is not a part of the standard but instead offers guidance/rationale to assist in the implementation of the standard. Various other comments were offered regarding the content of the Supplementary Reference Document, to which the SDT responded accordingly.

Organization	Yes or No	Question 3 Comment
Pepco Holding Inc & Affiliates	Yes	
Pacific Northwest Small Public Power Utility Comment Group	No	
Tennessee Valley Authority	No	
Northeast Power Coordinating Council	No	
Platte River Power Authority System Maintenance	No	
Electric Market Policy	Yes	The document on page 3 states that data available from EPRI (et.al) was utilized by the Standard Drafting Team; however, there are no references to EPRI documents in Section 16. Suggest including EPRI references for completeness.
Response: Thank you for your comments. Page 3 of the Supplementary Reference Document has been revised to remove reference to EPRI documents.		
Bonneville Power Administration		
Santee Cooper	No	

Organization	Yes or No	Question 3 Comment
NERC Staff	Yes	1. In section 2.3, NERC staff recommends noting that the present NERC Glossary definition of Bulk Electric System will be revised in response to FERC Order No. 743. 2. In Section 2.4, NERC staff recommends changing the phrase “relays that use measurements of voltage, current, frequency and/or phase angle” with “protective relays that respond to electrical quantities” for consistency with recent changes to the proposed definition of Protection System.
Response: Thank you for your comments. **1. The SDT believes that it is not advisable to reference future activities, but notes that the standard will be applicable to whatever is defined to be the BES, either today or in the future.** **2. The Supplementary Reference Document has been revised as suggested.**		
FirstEnergy	Yes	The discussions surrounding implementing the PSMP on pages 10 and 11 of the clean copy are troublesome for the following reasons. 1. On Pg. 10, under Sec. 8.1, the 4th bullet item states "If your PSMP (plan) requires more activities then you must perform and document to this higher standard". This statement's use of the word "must" implies that an entity will be audited to their documented maintenance practices, even if those practices exceed the requirements of the PRC-005 standard. The PRC-005 standard, and any standard, details the minimum requirements that must be met to achieve a certain reliability goal. For example, if an entity's program states that it will do maintenance on a relay every 4 years, but the standard only requires maintenance every 6 years, the entity shall be held compliant to the standard's 6 year interval. If the entity in this example decides that in year 4 it must delay its maintenance to year six, that should be allowable since the standard PRC-005-2 requires maintenance every 6 years. 2. Since the standard no longer discusses Condition Based Maintenance, it should be removed from the reference document for consistency.
Response: Thank you for your comments. **1. This text is in the Supplementary Reference Document as a caution to entities that they may be expected to be held accountable for their entire documented PSMP, even if it exceeds the minimum requirements of the standard.** **2. The Supplementary Reference Document discusses condition-based maintenance in a conceptual manner, as a generally-recognized term. The SDT did make some changes within the Supplementary Reference document to clarify the manner in which condition-based maintenance is discussed.**		

Organization	Yes or No	Question 3 Comment
Florida Municipal Power Agency	Yes	
PSEG Companies ("Public Service Enterprise Group Companies")	Yes	Figure 2 "typical generation system" shows a typical auxiliary medium voltage bus, in addition to the color coded elements suggest that a very distinct line of demarcation (dark dotted line) be added to the figure that defines the elements associated with the MV bus protection served by the station Aux Transformer and unit aux transformer are not part of the BES- PSMP PRC5 requirements. Also see comment 5 below; we suggest that the station service transformer must be connected to BES for inclusion in standard requirements. Suggest adding an explanation note to figure 2 to clarify this.
Response: Thank you for your comments. Figure 2 is intended to provide an example to users, not to describe the entire applicability of the draft standard. As such, the SDT does not believe that this figure needs to reflect all possible arrangements, nor does it need to suffice to describe the entire applicability. As for your comment regarding the unit auxiliary transformer, please see the SDT response to your more detailed comments in Question 5.		
MRO's NERC Standards Review Subcommittee	No	
Western Area Power Administration	No	
TransAlta Centralia Generation Partnership	No	
NextEra Energy	No	
City of Austin DBA Austin Energy		
PacifiCorp		
Southern Company Transmission	Yes	1. Page 11 and 12, (Additional Notes for Table 1-1 through 1-5) Comment ->> The standard does not reference these notes. Should these notes be referenced and included in the Standard? 2. Page 12, Additional Notes for Table 1, item #7 ("performing an operational trip test")

Organization	Yes or No	Question 3 Comment
		Comment ->> Standard does not state that an operational/full functional test is required. Please clarify. 3. Page 22, 15.3, Control Circuitry Functions, paragraph 1 ("verify, with a volt-meter, the existence of proper voltage at the open contacts" Comment ->> The example of measuring the proper voltage with a volt-meter at the open contacts to verify the circuit indicates that the 12-year "full functional" trip test of control circuits is not required. Please clarify. 4. Page 22, 15.3, Control Circuitry Functions, paragraph 3 ("UVLS or UFLS scheme are excluded from the tripping requirement, but not from the circuit test requirements") Comment ->> This indicates to me that measuring the proper voltage with a volt-meter at the open contacts will verify the circuit. Please confirm. Please clarify - If a suitable monitoring system is installed that verifies every parallel trip path then the manual-intervention testing of those parallel trip paths can be "extended beyond 12 years". Standard indicates that no periodic maintenance is required. Consider changing "extended beyond 12 years" to "eliminated". 5. Page 23, 15.3, Control Circuitry Functions, paragraph 5 ("When verifying the operation of the 94 and 86 relays each normally-open contact that closes to pass a trip signal must be verified as operating correctly.") Comment ->> This indicates that we must verify that trip and auxiliary device contacts change state. Please confirm. The standard does not state that the contacts must be verified to change states. If this is required, please add to the standard.

Response: Thank you for your comments.

1. **These notes are provided as application guidance relative to the Tables, which as you note, does not reference them.**
2. **This note has been revised within the Supplementary Reference Document in consideration of your comment.**
3. **This example is stated within the Supplementary Reference Document as an example method of testing the dc control circuitry. The draft standard no longer requires a "functional trip test", although it does require that lockout relays and auxiliary relays be operated at least once every 6 years to verify that they function properly.**
4. **The Supplementary Reference Document has been revised as suggested.**
5. **The draft standard specifies "Verify electrical operation" of these components every 6 years. This seems implicitly to require a change of state of the contacts. However, it may be possible to verify electrical operation without having to check the change of state of the individual contacts, but the contacts will have to be checked as part of the 12-year full test. The cited clause/paragraph Supplementary Reference Document has been revised to clarify.**

Organization	Yes or No	Question 3 Comment
Clark Public Utilities	No	
Exelon		
Manitoba Hydro	No	
Dynegy Inc.	No	
Oncor Electric Delivery Company LLC	No	
Ingleside Cogeneration LP	Yes	Ingleside Cogeneration, LP, believes that the Section 15.5 of the Supplementary Reference "Associated communications equipment (Table 1-2)" properly reflects the intent of the validation of relay-to-relay communications. It states that any "evidence of operational test or documentation of measurement of signal level, reflected power or data-error rates can fulfill the requirements." However, Table 1-2 - which will be the ultimate reference used by audit teams - only clearly allows for the measurement of channel parameters. Although the newer technology relays provide read-outs of signal level or data-error rates that do not require intrusive testing, older relays do not. The tools required to perform such testing are not easily available - and may leave the communications channel in worse shape after testing than it was prior to testing. We believe that Table 1-2 should be updated to clearly state that an operational test is sufficient for the testing of relay-to-relay communication - consistent with the Supplementary Reference.
Response: Thank you for your comments. The standard does not explicitly require measurement of channel parameters, but instead specifies that they may be verified. The Supplementary Reference Document has been revised to remove the discussion of operational testing of the communications channel.		
Indiana Municipal Power Agency	No	
South Carolina Electric and Gas	No	
Entergy Services	Yes	R1.5 calls for "identification of calibration tolerances or equivalent parameters for each Protection System Component Type....". We believe the Supplementary Reference document should provide additional information and examples of calibration tolerances or equivalent parameters which would be expected for the various component types. Especially for any "equivalent" parameters which would be required for compliance

Organization	Yes or No	Question 3 Comment
		for a component type besides protective relays.
Response: Thank you for your comments. The SDT determined that the fundamental concerns of Requirement R1, Part 1.5 and the associated changes are addressed within the PSMP definition, and that Requirement R1, Part 1.5 is not necessary; therefore, it has been removed.		
Duke Energy	No	
Wisconsin Electric Power Company	No	
Independent Electricity System Operator	No	
American Electric Power	Yes	With such a complex standard as this, the FAQ and Supplementary Reference documents do aid the Protection System owner in demystifying the requirements. But AEP holds strong doubt on how much weight the documents carry during audits. It would be better to include them as an appendix in the actual standard, but in a more compact version with the following modifications: 1. Section 5 of the Supplementary Reference, refers to "condition-based" maintenance programs. However, no where in the standard is the term "condition-based" used in reference to defining ones PSMP. The Supplementary Reference should be revised to remove reference to a condition-based PSMP; alternatively the Standard could be revised to include the term "condition-based" within the Standard Requirements and Table 1. 2. Section 15.7, page 26, appears to have a typographical error "...can all be used as the primary action is the maintenance activity..." 3. Figure 2 is difficult to read. The figure is grainy and the colors representing the groups are similar enough that it is hard to distinguish between groups.
Response: Thank you for your comments. The discussion within the Supplementary Reference Document and FAQ are informative, not normative, and thus do not belong as part of the standard. **1. The Supplementary Reference Document discusses condition-based maintenance in a conceptual manner, as a generally-recognized term. The SDT did make some changes within the Supplementary Reference Document to clarify the manner in which condition-based maintenance is discussed.** **2. This clause has been corrected.**		

Organization	Yes or No	Question 3 Comment
3. A higher-quality version of Figure 2 has been substituted.		
ITC	Yes	1. Auxiliary Relay Testing: We repeat our objection to the 6 year requirement for testing of auxiliary relays. The STD response to our previous objection was: Please see new Table 1-5. The SDT believes that mechanical solenoid-operated devices share performance attributes (and failure modes) with electromechanical relays and need to be tested at similar intervals. Performance-based maintenance is an option to increase the intervals if the performance of these devices supports those intervals. Auxiliary relays are, of course, electromechanical relays, but much less complicated than impedance, differential or even time-overcurrent electromechanical relays. It has been our experience that trip failures are rare and that our present 10 year control, trip tests, and other related testing are sufficient in verifying the integrity of the scheme. Section 8.3 of the Supplementary Reference notes statistical surveys were done to determine the maintenance intervals. Were auxiliary relays included in these surveys in a such a way to verify that they indeed require a 6 year maintenance interval? We recommend they be considered part of the control circuitry, with a 12 year test cycle. 2. High Speed Ground Switch Testing: We repeat our recommendation that the standard state that a high speed ground switch is an interrupting device. We also recommend that testing requirements for High-Speed ground switches be clearly stated in the standard. Section 15.3 of the Supplementary Reference contains the following: It is necessary, however, to classify a device that actuates a high-speed auto-closing ground switch as an interrupting device if this ground switch is utilized in a Protection System and forces a ground fault to occur that then results in an expected Protection System operation to clear the forced ground fault. The SDT believes that this is essentially a transferred-tripping device without the use of communications equipment. If this high-speed ground switch is "...applied on, or designed to provide protection for the BES..." then this device needs to be treated as any other Protection System component. The control circuitry would have to be tested within 12 years and any electromechanically operated device will have to be tested every 6 years. If the spring-operated ground switch can be disconnected from the solenoid triggering unit then the solenoid triggering unit can easily be tested without the actual closing of the ground blade. We disagree that a high-speed ground switch can be adequately tested by disconnecting the solenoid triggering unit. The ability of the trip coil to "operate the circuit breaker" must be verified per Table 1-5 Row 1. The ability of the "solenoid triggering unit" to operate the ground switch should be required also. A high-speed ground switch is a unique device. Its maintenance requirements should be specifically included in the standard itself. Based on Draft 3 of the standard, this is a electromechanically operated device and would have to be tested every 6 years. A logical location would be in Table 1-5. Is there test

Organization	Yes or No	Question 3 Comment
		data to support the test method of disconnecting the solenoid triggering unit?
Response: Thank you for your comments. **1. The SDT believes that the appropriate interval for electromechanical devices such as aux or lockout relays should remain at 6 years, as these devices contain "moving parts" which must be periodically exercised to remain reliable.** **2. PRC-005-2 includes high-speed grounding switch trip coils within the dc control circuitry to the degree that the initiating Protection Systems are characterized as "transmission Protection Systems". There is currently an unapproved interpretation response (project 2009-17) addressing what is a "transmission protection system." When this interpretation is approved, the SDT will incorporate it within PRC-005-2. Section 15.3 of the Supplementary Reference Document will be revised to clarify the discussion of testing of the ground-switch trip coil.**		
ISO New England Inc.	No	
Nebraska Public Power District	Yes	The Supplementary Reference Documents identified are unapproved and in draft form. I believe that only approved documents should be referenced in the Standard. Therefore, I recommend updating the Supplementary Reference Documents section with approved versions of the documents.
Response: Thank you for your comments. The SDT revised the Supplementary Reference Document section of the draft Standard.		
CenterPoint Energy		
American Transmission Company	No	
Consumers Energy	No	
Southern Company Generation	Yes	1. On Page 4, Paragraph 2.2 is no longer proposed - the paragraphs just before 2.2 need to be revised. 2. On Page 12, item 7, the phrase "operational trip test" is not used in the standard. Please consider using this phrase in the standard. 3. On Pages 14-15, several paragraphs describing the contents of Sections 9, 10, 11, & 13 are given – these appear to be out of place and don't seem to belong here (just before "9. Performance-Based Maintenance Process). 4. On Page 24, correct the bulleted Protection System Definition to match the most recent definition.

Organization	Yes or No	Question 3 Comment
		5. On Page 29, please improve the clarity of Figure 2. 6. On Page 31, please revise the flowchart references to R4.4.1 and R4.4.2. 7. Please correct the following formatting: Page 2, Table of Contents; Page 18, the bulleted item list; Page 23, add a space before the last paragraph.
Response: Thank you for your comments. **1. This Section of the Supplementary Reference Document has been corrected.** **2. This Section of the Supplementary Reference Document has been revised.** **3. The Supplementary Reference Document has been revised to address your comment.** **4. The Supplementary Reference Document has been revised to address your comment.** **5. The Supplementary Reference Document has been revised to address your comment.** **6. The Supplementary Reference Document has been revised to address your comment.** **7. The Supplementary Reference Document has been revised to address your comment.**		
US Bureau of Reclamation	Yes	The Supplementary reference provides significant clarity to the intent and application of standard; however, in doing so, it reveals conflicts and ambiguity in the text of the standard. It is suggested that some of the clarifying language be inserted into the text of the standard.
Response: Thank you for your comments. To the extent possible, the clarifying language of the Supplementary Reference Document will be incorporated into the next version of PRC-005 when the standard is drafted in the Results-based format.		
Alliant Energy	No	
LCRA Transmission Services Corporation	Yes	Well written and helpful document. In Section 8.1, the document states that if your PSMP requires activities more often than the Tables maximum, then you must perform to that higher standard. While it is understandable that an entity may desire to maintain their PRS at a higher level, they should not be fined or penalized for achieving less than their standard but within the intervals stated in the Tables. This point should be clarified, preferably within the standard itself.
Response: Thank you for your comments. Requirement R1, Part 1.3 and Requirement R4 within the Standard has been revised in a manner which addresses your comment. However, the SDT re-emphasizes that entities may be expected to be held to their PSMP developed in accordance to		

Organization	Yes or No	Question 3 Comment
Requirement R1, whether it minimally addresses the remainder of the requirements in the standard or exceeds those requirements.		
MidAmerican Energy	Yes	The Supplementary Reference should have clear disclaimers indicating that nothing in the reference is mandatory and enforceable.
Response: Thank you for your comments. NERC establishes that only the Standard is mandatory and enforceable, and Section F of the standard introduces the Supplementary Reference Document as presenting supporting discussion. The introductory area of the Supplementary Reference Document will be revised to clarify this.		
Ameren	No	
Xcel Energy	Yes	1. Requirement R1 of the standard has been changed and no longer states that only relays which sense current, voltage, and phase angle to detect anomalies are in scope. However, it is noted that the new definition of Protection System states "Protective Relays which respond to electrical parameters." Does Section 2.4 of the Supplementary Reference and, in particular, the last sentence of this section, still align with the standard such that sudden pressure devices are not classified as a relay requiring calibration per Table 1-1? Is the tripping path through the Sudden Pressure Device included as DC Control Circuitry per Table 1-5? FAQ II.4.F would indicate testing of trips from 63 devices are also not required. If so, perhaps this should be restated in Section 2.4 of the Supplementary reference. 2. Section 2.4 could be read to imply that "applicable relays" includes IEEE device #86, lockout relays and IEEE device #94, tripping or trip free relays. However, it is apparent from Table 1-1 "Component Type – Protective Relays" that there are no maintenance activities applicable to 86 or 94 devices. On the other hand, Table 1-5 "Component Type - Control Circuitry" does include maintenance activities for electromechanical trip or auxiliary devices. Thus the tables of the standard imply that 86 and 94 devices would be more accurately classified as DC control circuitry rather than relays. We suggest that Section 2.4 be written to clarify the SDT's intent for the component type classification of devices 86 and 94. Note that auditors of PRC-005-1 frequently ask for a list of in scope relays and it would nice to have a definite rationale for excluding 86 and 94 devices from these relay lists.
Response: Thank you for your comments. **1. The Supplementary Reference Document has been revised to clarify this point.** **2. The SDT re-emphasizes that auxiliary and lockout relays are included within the standard as mechanical-operating devices that must be verified to operate within a 6-year interval, and also as devices which must be verified within the verification of all paths of the trip circuits on a 12-year interval. It is left to the entity to determine how to best demonstrate compliance with that requirement to the compliance monitor. The**		

Organization	Yes or No	Question 3 Comment
Supplementary Reference Document has been revised to clarify this point.		

4. The SDT has provided the "Frequently-Asked Questions" (FAQ) document to address anticipated questions relative to the standard. Do you have any specific suggestions for improvements?

Summary Consideration: Commenters suggested corrective language and requested additional discussions within the FAQ document. The SDT decided to eliminate the FAQ document and incorporate its contents into the Supplementary Reference Document as appropriate. The SDT considered all commenters' suggestions during that activity.

Organization	Yes or No	Question 4 Comment
Pepco Holding Inc & Affiliates	Yes	
Pacific Northwest Small Public Power Utility Comment Group	Yes	WECC does not use the definition of the BES that NERC supplied to FERC via http://www.nerc.com/docs/docs/ferc/RM06-16-6-14-07CompFilingPar77ofOrder693FINAL.pdf,so the answer to III.1.3 (page 19-20) is not accurate.
Response: Thank you for your comments. The SDT decided to eliminate the FAQ document and incorporate the FAQ's contents into the Supplementary Reference Document as appropriate. The SDT considered your comments during this activity.		
Tennessee Valley Authority	No	
Northeast Power Coordinating Council	Yes	See response to Question 5 below.
Response: Thank you for your comments. Please see our response to your comments in Question 5.		
Platte River Power Authority System Maintenance	No	
Electric Market Policy	Yes	The FAQ's do not appear to have kept up with the current draft Standard. 1. For example, Question B under Section 2 for Protective Relays, refers to the use of the word "Restoration" in the definition of a Protection System Maintenance Program. The current definition uses the word "Restore." 2. Additionally, Answers B, I, and J under Section 2 for Protective Relays each refer to Requirement R4.3,

Organization	Yes or No	Question 4 Comment
		which in not in the current Standard. Suggest a final edit of the FAQ's to clean-up these type of issues.
Response: Thank you for your comments. The SDT decided to eliminate the FAQ document and incorporate the FAQ's contents into the Supplementary Reference Document as appropriate. The SDT considered your comments during this activity.		
Bonneville Power Administration		
Santee Cooper	No	
NERC Staff	Yes	1. At a minimum, the response to Question II.1.A should be revised to reflect the present revision of Requirement R1. In the current proposed response to the FAQ, the answer refers to text that was deleted from Requirement R1 in the current posting of the standard; i.e., this standard covers protective relays "that use measurements of voltage, current and/or phase angle to determine anomalies and to trip a portion of the BES." The removal of this text from Requirement R1 makes it less clear whether the standard applies to reclosing functions and protective functions used to supervise automatic or manual closing of a circuit breaker to ensure the voltage magnitude and phase angle difference are within specified tolerances. The drafting team also should consider whether additional specificity is required to ensure applicability is clearly defined within the standard. 2. In the response to Question II.2.H, NERC staff notes that the word "than" should be changed to "then" in the phrase "If the component no longer performs Protection System functions than..." 3. In the response to Question II.2.I, NERC staff recommends noting that "When a failure occurs in a protection system, power system security may be compromised, and notification of the failure must be conducted in accordance with relevant NERC standard(s)." The recommended text is included in the Supplementary Reference Document and inclusion in the FAQ response provides consistency and highlights obligations in other standards necessary for BES reliability. 4. In the response to Question III.1.A, NERC staff recommends noting that the present NERC Glossary definition of Bulk Electric System will be revised in response to FERC Order No. 743. 5. In the response to Question III.3.A, NERC staff recommends a more generic reference to NERC UFLS requirements in place of the reference to PRC-007-0, as PRC-007 will be retired pending FERC approval of PRC-006-1.In the response to Question IV.1.A (third paragraph), NERC staff recommends changing the phrase "that are certainly coming to the industry" to "may be coming to the industry" for consistency with the change to the response to Question V.4.A. Both questions appear to address the same or similar concerns.

Organization	Yes or No	Question 4 Comment
Response: Thank you for your comments. The SDT decided to eliminate the FAQ document and incorporate the FAQ's contents into the Supplementary Reference Document as appropriate. The SDT considered your comments during this activity.		
FirstEnergy	No	
Florida Municipal Power Agency	Yes	
PSEG Companies ("Public Service Enterprise Group Companies")	Yes	Suggest that the section 5 - station DC supply have some specific examples added that would be acceptable methods for verifying the "state of charge" as required by standard table 1-4.
Response: Thank you for your comments. The SDT decided to eliminate the FAQ document and incorporate the FAQ's contents into the Supplementary Reference Document as appropriate. The SDT considered your comments during this activity. Table 1-4 has been revised to remove "state of charge" from the activities.		
MRO's NERC Standards Review Subcommittee	No	
Western Area Power Administration	No	
TransAlta Centralia Generation Partnership	No	
NextEra Energy	No	
City of Austin DBA Austin Energy		
PacifiCorp		
Southern Company Transmission	Yes	1. Page 7, L. ("verify operation of the relay inputs ...") Comment ->> Clarification needed. Standard states that each input should be "picked up" or "turned on and off". Do you have to change states of the input contact(s) or can you just jumper positive to the input(s) to verify that the microprocessor relay verifies this change of state?

Organization	Yes or No	Question 4 Comment
		2. Page 10, 4.E ("What does functional (or operational) trip test include?") Comment ->> The words "functional (or operational) trip test" are not in the Standard. Is this required? If so, please clarify this in Standard. If not, please remove. (Reference comment regarding "verify all paths of the control and trip circuits" on page 17 of standard.) 3. Page 18, 7. (Distributed UVLS and UFLS system.) and Page 19 8. (Centralized UVLS and UFLS system.) Comment ->> Standard does not specify "distributed" or "centralized" UVLS and UFLS systems. Please consider combining section 7 & 8, omitting items 7.C., 8.E., and omitting "distributed" and "centralized" references on pages 18 and 19.
Response: Thank you for your comments. **The standard does explicitly require that auxiliary relays, lockout, and trip coils of interrupting devices be verified to have electrically operated every 6 years, and this is the only place in the standard that currently requires this sort of activity.** **The SDT decided to eliminate the FAQ document and incorporate the FAQ's contents into the Supplementary Reference Document as appropriate. The SDT considered your comments during this activity.**		
Clark Public Utilities	Yes	Provide answers to the following questions. Does the completion of a battery ohm test or a battery performance test satisfy the verification requirements for state of charge of the individual battery cells/units, battery continuity, battery terminal connection resistance, and battery internal cell-to-cell or unit-to-unit connection resistance (where available to measure)?
Response: Thank you for your comments. The activities described do not satisfy all of the requirements (at the established intervals) listed in your comment. The SDT decided to eliminate the FAQ document and incorporate the FAQ's contents into the Supplementary Reference Document as appropriate. The SDT considered your comments during this activity. Table 1-4 has been revised to remove "state of charge" from the activities.		
Exelon	Yes	1. Clarify what kind of testing is required on lockout relays/86 devices. Specifically, whether functional testing is adequate or if simple calibration, similar to protective relays, is all that is are required. 2. Clarify if protective relays that trip equipment (e.g., a condensate pump that would in turn cause a main generator trip) are also included in the scope of this Standard. 3. Clarify if relays which result in generator run back, but do not trip the generator, are included in the scope of this Standard.
Response: Thank you for your comments.		

Organization	Yes or No	Question 4 Comment
1. For lockout relays, the standard requires that they be electrically operated every 6 years, and that the trip path be verified every 12 year. No calibration/etc is specified. **2. As described in FAQ III.2.A, protective relays which trip equipment within the plant which may eventually result in tripping of the generator, but do not trip the generator (either directly or via a generator lockout relay) , are not included.** **3. If the generator run back scheme is characterized as a Special Protection System within your region, these relays would be included as part of that system (Section 4.2.6- Applicability of the draft Standard).** **The SDT decided to eliminate the FAQ document and incorporate the FAQ's contents into the Supplementary Reference Document as appropriate. The SDT considered your comments during this activity.**		
Manitoba Hydro	Yes	As previously stated, the maintenance requirements for batteries listed in Table 1-4 do not appear to be consistent with example 1 in Section V, 1A of the FAQ. Specifically the FAQ does not mention the of the individual battery cells/units, the battery continuity, the battery terminal connection resistance, the battery internal cell-to-cell or unit-to-unit connection resistance, or the cell condition which are indicated as 18 month interval tasks in table 1-4.
Response: Thank you for your comments. The SDT decided to eliminate the FAQ document and incorporate the FAQ's contents into the Supplementary Reference Document as appropriate. The SDT considered your comments during this activity. Table 1-4 has been revised to remove "state of charge" from the activities.		
Dynegy Inc.	No	
Oncor Electric Delivery Company LLC	Yes	There is still confusion in Table 1-4 concerning the "Monitored Station dc supply." The uncertainty is over whither an Owner must have all seven (7) monitoring activities (Station dc supply voltage, State of charge of the individual battery cell/units, Battery continuity of station battery, Cell-to-cell and battery terminal resistance, Electrolyte level of all cells in station battery, Unintentional dc grounds, and Cell/unit internal ohmic values of station battery) listed in the table or just one of them to take advantage of forgoing the maximum maintenance interval for an activity and going to the 6 year maximum maintenance interval to verify that the monitoring device is calibrated. A FAQ concerning this question would be beneficial to those who are concerned that they must monitor all seven activities in order to take advantage of condition based maintenance for the station dc supply. Also an explanation of how each of the 7 monitoring activities relates to a specific station dc supply maintenance activity might be beneficial.
Response: Thank you for your comments. Table 1-4 has been further revised to address your concern (see Table 1-4(f)). The SDT decided to eliminate the FAQ document and incorporate the FAQ's contents into the Supplementary Reference Document as appropriate. The SDT considered your comments during this activity. Table 1-4 has been revised to remove "state of charge" from the activities.		

Organization	Yes or No	Question 4 Comment
Ingleside Cogeneration LP		
Indiana Municipal Power Agency	No	
South Carolina Electric and Gas	No	
Entergy Services	Yes	Section II.2.B references R4.3 which has been revised to R4.2.
Response: Thank you for your comments. The SDT decided to eliminate the FAQ document and incorporate the FAQ's contents into the Supplementary Reference Document as appropriate. The SDT considered your comments during this activity.		
Duke Energy	Yes	There are typographical errors on the FAQ Requirements Flowchart (should be R4.1.1 and R4.1.2 instead of R4.4.1 and R4.4.2).
Response: Thank you for your comments. The SDT decided to eliminate the FAQ document and incorporate the FAQ's contents into the Supplementary Reference Document as appropriate. The SDT considered your comments during this activity.		
Wisconsin Electric Power Company	Yes	Table 1-4 requires an activity to verify the state of charge of battery cells. There are no possible options for meeting this requirement listed in the FAQ document. Unlike other terms used in the standard, this term is not mentioned or defined in the FAQ. To comply with this standard, the SDT needs to provide more guidance. For example, for VLA batteries the measured specific gravity could indicate state of charge. For VRLA batteries, it is not as clear how to determine state of charge, but possibly this can be determined by monitoring the float current.
Response: Thank you for your comments. The SDT decided to eliminate the FAQ document and incorporate the FAQ's contents into the Supplementary Reference Document as appropriate. The SDT considered your comments during this activity. Table 1-4 has been revised to remove "state of charge" from the activities.		
Independent Electricity System Operator	No	
American Electric Power	Yes	With such a complex standard as this, the FAQ and Supplementary Reference documents do aid the Protection System owner in demystifying the requirements. But AEP holds strong doubt on how much weight the documents carry during audits. It would be better to include them as an appendix in the actual standard, but in a more compact version with the following modifications:

Organization	Yes or No	Question 4 Comment
		1. The section "Terms Used in PRC-005-2" is blank and should be removed as it adds no value. 2. Section I.1 and Section IV.3.G reference "condition-based" maintenance programs. However, no where in the standard is the term "condition-based" used in reference to defining ones PSMP. The FAQ should be revised to remove reference to a condition-based PSMP; alternatively the Standard could be revised to include the term "condition-based" within the Standard Requirements and Table 1. 3. The second sentence to the response in Section I.1 appears to have a typographical error "... an entity needs to and perform ONLY time-based...".
Response: Thank you for your comments. The discussion within the Supplementary Reference and FAQ are informative, not normative, and thus do not belong as part of the standard. The SDT decided to eliminate the FAQ document and incorporate the FAQ's contents into the Supplementary Reference Document as appropriate. The SDT considered your comments during this activity.		
ITC	No	
ISO New England Inc.	Yes	See response to Question 5 below.
Response: Thank you for your comments. Please see our response to your comments in Question 5.		
Nebraska Public Power District	No	
CenterPoint Energy	Yes	The need for an FAQ document, in addition to an extensive Supplementary Reference document, illustrates the complexity and impracticality of the proposed Standard. CenterPoint Energy does not support the development of an additional type of document, that is, the FAQ document. CenterPoint Energy recommends eliminating the FAQ document and using only a Supplementary Reference" document. This would also provide the benefit of not having contradictory information in the two documents.
Response: Thank you for your comments. The SDT believes that entities should be able to implement the standard without either the FAQ or Supplementary Reference. However, the SDT is also convinced that many entities may find the supporting discussion/rationale useful, particularly to assist them in implementing the standard in an efficient manner. The SDT decided to eliminate the FAQ document and incorporate the FAQ's contents into the Supplementary Reference Document as appropriate.		
American Transmission Company	Yes	1. FAQ Protective Relays 2.D: The last sentence is not consistent with the discussions at the "March 2010, Standard Drafting Team Meeting, Project 2007-17". The understanding from that meeting was that the relay settings would be verified that the "as left" settings were the same as the "as found" settings and that the intent was not to verify the settings against a Master Record. Therefore the intent is that the tester will

Organization	Yes or No	Question 4 Comment
		verify that no setting changes were made as part of the testing process. Please include this clarification with the language in the standard. 2. FAQ Group by Type of Maintenance Program 2.B: We agree with the use of either the in-service date or the commissioning date to start the initial due date calculation for maintenance. Please include this clarification with the language in the standard.
Response: **1. The intent is that the settings of the component be as specified at the conclusion of maintenance activities, whether those settings may have "drifted" since the prior maintenance or whether changes were made as part of the testing process.** **2. The discussion within the Supplementary Reference and FAQ are informative, not normative, and thus do not belong as part of the standard. The SDT decided to eliminate the FAQ document and incorporate the FAQ's contents into the Supplementary Reference Document as appropriate. The SDT considered your comments during this activity.**		
Consumers Energy	No	
Southern Company Generation	Yes	1. On Page 3, please revise the flow chart references to R4.4.1 and R4.4.2. Also, add (Attachment A) to the "Performance Based" label. 2. On Page 7, Section I, correct the reference of R4.3 to R4.2. 3. Also, revise the last paragraph in Section I to the following: The entity should assure that the component performance is acceptable at the conclusion of the maintenance activities or initiate resolution of any indentified maintenance correctable issues. 4. On Page 7, Section J, correct the reference of R4.3 to R4.2. 5. On Page 10, Section D, a reference is made to "trip test" Table 1. Should this be Table 1-5? The exact phrase "trip test" is not used in the standard. Should it be? 6. On Page 10, Section e, the phrase "functional (or operational) trip test" is not used in the standard – should it be? 7. On Page 11, Section 5A, correct the reference of Table 1 to Table 1-4 in the Station Battery and Emerging Technologies paragraph. 8. On Page 12, Section B, correct the reference of Table 1 to Table 1-4. (2X)

Organization	Yes or No	Question 4 Comment
		9. On Page 13, Section F, correct the reference of Table 1 to Table 1-4. (1X) 10. On Page 14, Section G, correct the reference of Table 1 to Table 1-4. (3X) 11. On Page 14, Section G, change the text "The first maintenance activity" to The capacity testing activity". 12. On Page 14, Section G, change the text "The second maintenance activity", to The internal ohmic measurement activity". 13. On Page 14, Section H, correct the reference of Table 1 to Table 1-4. (1X) 14. On Page 17, Section C, correct the reference of Table 1 to Table 1-5. (1X) 15. Please address what is meant by "Battery terminal connection resistance" on Page 14, Table 1-4 of the standard.
Response: Thank you for your comments. The discussion within the Supplementary Reference and FAQ are informative, not normative, and thus do not belong as part of the standard. The SDT decided to eliminate the FAQ document and incorporate the FAQ's contents into the Supplementary Reference Document as appropriate. The SDT considered your comments during this activity.		
US Bureau of Reclamation		No Comment
Alliant Energy	No	
LCRA Transmission Services Corporation	Yes	
MidAmerican Energy	Yes	The Frequently Asked Questions should have clear disclaimers indicating that nothing in the reference is mandatory and enforceable.
Response: Thank you for your comments. NERC establishes that only the Standard is mandatory and enforceable, and Section F of the standard introduces this (and the Supplementary Reference Document) as presenting supporting discussion. The SDT decided to eliminate the FAQ document and incorporate the FAQ's contents into the Supplementary Reference Document as appropriate. The introductory area of the Supplementary Reference Document will be revised to address your concern.		
Ameren	No	This document is helpful.
Xcel Energy	Yes	The changes in the standard and edit attempts on the FAQ have created some problems and confusion. Examples; The new FAQ I.1 answer does not make sense "An entity needs to and perform ONLY time-based

Organization	Yes or No	Question 4 Comment
		. . ." FAQ II.1.A: Requirement R1 no longer contains the statement that "use voltage, current, or phase angle to detect anomalies" so the answer to this FAQ is now out of synch with the standard. FAQ II.2.B – "Restoration" is no longer in the PMSP and has been changed to "Restore" and R4.3 no longer exists. FAQ II.2.I and II.2.J answers also references non-existent requirement R4.3. These are just some examples of fidelity issues that have been created by the most recent edit of PRC-005-2 – we did not perform a review of the entire document. The SDT should be commended for its efforts on the FAQ document as it is exceedingly helpful and well written. However, it needs to be brought back into alignment with the Standard. It is apparent that this fidelity check between the standard and the FAQ was not done prior to this posting. Finally, it seems some FAQs would be warranted to help explain the intent of new requirements R1.5 and R4.2 especially in regards to non-quantifiable maintenance results such as battery visual inspection as well as to provide examples of "other equivalent parameters" acceptance criteria for the various component types included in the Protection System definition
Response: Thank you for your comments. The SDT decided to eliminate the FAQ document and incorporate the FAQ's contents into the Supplementary Reference Document as appropriate. The SDT considered your comments during this activity.		

5. If you have any other comments on this Standard that you have not already provided in response to the prior questions, please provide them here.

Summary Consideration: Many commenters disagreed with Requirement R1, Part 1.5 which was added in the previous draft; in response, the SDT removed Requirement R1, Part 1.5 from the standard. Commenters also observed that Requirement R1, Part 1.4 was redundant with Requirement R2, and the SDT removed R2 in response to these comments. Many commenters objected to 4.2.5.5 in the Applicability Section; the SDT removed this clause.

Organization	Yes or No	Question 5 Comment
Pepco Holding Inc & Affiliates	Yes	1. What "specific statistical data" was used to validate that unmonitored communication systems are 24 times more prone to failure than unmonitored protective relays? Comments were previously submitted that the 3 month interval for verifying unmonitored communication systems was much too short. The SDT declined to change the interval and in their response stated: "The 3 month intervals are for unmonitored equipment and are based on experience of the relaying industry represented by the SDT, the SPCTF and review of IEEE PSRC work. Relay communications using power line carrier or leased audio tone circuits are prone to channel failures and are proven to be less reliable than protective relays." The 3 month interval is very burdensome and our experience does not appear to justify. A longer interval should be reconsidered.
Response: Thank you for your comments. The SDT reasserts that the 3 month intervals are for unmonitored equipment and are based on experience of the relaying industry represented by the SDT, the SPCTF and review of IEEE PSRC work. Relay communications using power line carrier or leased audio tone circuits are prone to channel failures and are proven to be less reliable than protective relays. If an entity's experience is that these components require less-frequent maintenance, a performance-based program in accordance with R3 and Attachment A is an option.		
Pacific Northwest Small Public Power Utility Comment Group	No	
Tennessee Valley Authority	Yes	1R4 - "Identification of the resolution" and "Initiation of the resolution" are very distinct activities. In other places in this standard the requirement is for the resolution to be initiated, that is identified in a corrective maintenance work order, "identification of a resolution" requires technical expertise and can be difficult to track and might change over time for a particular problem. Proposed Change: Change "identification" to "initiation" in phrase "including identification of the resolution...". Overall: NERC is making significant changes to this sizeable standard and only allowing minimum comment period. While this is a good standard that has clearly taken many hours to develop, we are primarily voting

Organization	Yes or No	Question 5 Comment
		"NO" because of the hurried fashion it is being commented, voted, and reviewed.
Response: Thank you for your comments. Requirement R4 has been revised.		
Northeast Power Coordinating Council	Yes	1. In general, the standard is overly prescriptive and complex. It should not be necessary for a standard at this level to be as detailed and complex as this standard is. Entities working with manufacturers, and knowledge gained from experience can develop adequate maintenance and testing programs. 2. Why are "Relays that respond to non-electrical inputs or impulses (such as, but not limited to, vibration, pressure, seismic, thermal or gas accumulation)..." not included? The output contacts from these devices are oftentimes connected in tripping or control circuits to isolate problem equipment. 3. Due to the critical nature of the trip coil, it must be maintained more frequently if it is not monitored. Trip coils are also considered in the standard as being part of the control circuitry. Table 1-5 has a row labeled "Unmonitored Control circuitry associated with protective functions", which would include trip coils, has a "Maximum Maintenance Interval" of "12 Calendar Years". Any control circuit could fail at any time, but an unmonitored control circuit could fail, and remain undetected for years with the times specified in the Table (it might only be 6 years if I understand that as being the trip test interval specified in the table). Regardless, if a breaker is unable to trip because of control circuit failure, then the system must be operated in real time assuming that that breaker will not trip for a fault or an event, and backup facilities would be called upon to operate. Thus, for a line fault with a "stuck" breaker (a breaker unable to trip), instead of one line tripping, you might have many more lines deloaded or tripped because of a bus having to be cleared because of a breaker failure initiation. The bulk electric system would have to be operated to handle this contingency. 4. In reference to the FAQ document, Section 5 on Station dc Supply, Question K, clarification is needed with respect to dc supplies for communication within the substation. For example, if the communication systems were run off a separate battery in separate area in a substation, would the standard apply to these batteries or not? 5. To define terms only as they are used in PRC-005-2 is inviting confusion. Although they may be unique to PRC-005-2, some or all of them may be used in future standards, some already may be used in existing standards, and may or may not be deliberately defined. Consistency must be maintained, not only for administrative purposes, but for effective technical communications as well. 6. What is the definition of "Maintenance" as used in the table column "Maximum Maintenance Interval"? Maintenance can range from cleaning a relay cover to a full calibration of a relay. 7. A control circuit is not a component, it is made up of components.

Organization	Yes or No	Question 5 Comment
		8. Sub-requirement 1.5 needs to be clarified. It is not clear what "Identify calibration tolerances or other equivalent parameters..." means, and may be subject to different interpretations by entities and compliance enforcement personnel. 9. In the Implementation plan for Requirement R1, recommend changing "six" to fifteen. This change would restore the 3-month time difference that existed in the previous draft, between the durations of the implementation periods for jurisdictions that do and do not require regulatory approval. It will ensure equity for those entities located in jurisdictions that do not require regulatory approval, as is the case in Ontario. 10. The 'box' for "Monitored Station dc supply..." in Table 1-4 is not clear. It seems to continue to the next page to a new box. There are multiple activities without clear delineation. 11. Regarding station service transformers, Item 4.2.5.5 under Applicability should be deleted. The purpose of this standard is to protect the BES by clearing generator, generator bus faults (or other electrical anomalies associated with the generator) from the BES. Having this standard apply to generator station service transformers, that have no direct connection to the BES, does meet this criteria. The FAQs (III.2.A) discuss how the loss of a station service transformer could cause the loss of a generating unit, but this is not the purpose of PRC-005. Using this logic than any system or device in the power plant that could cause a loss of generation should also be included. This is beyond the scope of the NERC standards. 12. The Drafting Team must respond to the following concerns raised in the FERC NOPR, Docket No. RM10-5-000, Interpretation of Protection System Reliability Standard, December 16, 2010) to "prevent a gap in reliability". a. Any component that detects any quantity needed to take an action, or that initiates any control action (initial tripping, reclosing, lockout, etc.) affecting the reliability of the Bulk-Power System should be included as a component of a Protection System, as well as any component or device that is designed to detect defective lines or apparatuses or other power system conditions of an abnormal or dangerous nature and to initiate appropriate control circuit actions. b. The exclusion of auxiliary relays will result in a gap in the maintenance and testing of Protection Systems affecting the reliability of the Bulk-Power System. c. Excluding the maintenance and testing of reclosing relays will result in a gap in the maintenance and testing of relays affecting the reliability of the Bulk-Power System. d. Not establishing the specific requirements relative to the scope and/or methods for a maintenance and testing program for the DC control circuitry that is necessary to ensure proper

Organization	Yes or No	Question 5 Comment
		operation of the Protection System, including voltage and continuity.

Response: Thank you for your comments.

1. **The intervals and activities specified are believed by the SDT to be technically effective, in a fashion that may be consistently monitored for compliance. Further, FERC Order 693 directs NERC to establish maximum allowable intervals, which implies that minimum activities also need be prescribed. If an entity's experience is that components require less-frequent maintenance, a performance-based program in accordance with Requirement R3 and Attachment A is an option.**
2. **The SDT concentrated their efforts on protective relays which use the entire group of component types within the Protection System definition. Also, there is currently no technical basis for the maintenance of the devices which respond to non-electrical quantities on which to base mandatory standards related either to activities or intervals. Absent such a technical basis, we are currently unable to establish mandatory requirements, but may do so in the future if such a technical basis becomes available.**
3. **According to Table 1-5, trip coils of interrupting devices must be verified to operate every 6 years, rather than the 12-year interval. As a regional entity, you can specify Supplementary regional requirements to maintain these devices more frequently if you desire.**
4. **With respect to dc supply associated only with communications systems, we prescribe, within Table 1-2, that the communications system must be verified as functional every 3 months, unless the functionality is verified by monitoring. The specific station dc supply requirements (Table 1-4) do not apply to the dc supply associated only with communications systems. The SDT has decided to eliminate the FAQ and incorporate topics and discussion from the FAQ within the Supplementary Reference Document. Your comments will be considered within that activity.**
5. **The SDT has proposed these terms for use only within PRC-005-2 because we are concerned that other uses of these terms, either now or in the future, may not be consistent with the terms as used here. They are defined only for clarify within this standard. The SDT will confirm with NERC staff that this approach is acceptable.**
6. **As used in the "Maximum Maintenance Interval" column title of the table, maintenance refers to whatever activities are specified in the Activities column. The term is capitalized in the column title in conformance with normal editorial practice as a title, rather than as a definition**
7. **For purposes of this standard, the control circuit IS defined as one component type.**
8. **The SDT has determined that the fundamental concerns of Requirement R1, Part 1.5 and the associated changes are addressed within the PSMP definition, and that Requirement R1, Part 1.5 is not necessary. Therefore, it has been removed. Requirement R4 has also been re-drafted to address various related concerns noted within comments. The associated VSL has also been revised. Please see Supplementary Reference Document, Section 8 for a discussion of this.**
9. **In consideration of your comment, "six" has been modified to "twelve" in the Implementation Plan for Requirement R1, making it consistent with the remainder of the Implementation Plan.**
10. **Table 1-4 has been further modified for clarity**
11. **In response to many comments, including yours, the SDT has removed 4.2.5.5 from the Applicability of the standard.**

Organization	Yes or No	Question 5 Comment
12. The FERC NOPR is a notice-of-proposed-rulemaking and is not yet a directive. At such a time as a directive is published, NERC will take the necessary actions to address it.		
Platte River Power Authority System Maintenance	Yes	1. Please clarify what is required by R1.5: Identify calibration tolerances or other equivalent parameters for each Protection System component type that establish acceptable parameters for the conclusion of maintenance activities required. Is the intent a brief summary for each component type in the PSMP that would cover all equipment within that component type, or is it a detailed list of each piece of equipment within each component type? 2. The inclusion of dated check-off lists in M4 provides much needed clarity to the list of evidence.
Response: Thank you for your comments. **1. The SDT has determined that the fundamental concerns of Requirement R1, Part 1.5 and the associated changes are addressed within the PSMP definition, and that Requirement R1, Part 1.5 is not necessary; therefore, it has been removed. Requirement R4 has also been re-drafted to address various related concerns noted within comments. The associated VSL has also been revised. Please see Supplementary Reference Document, Section 8 for a discussion of this.** **2. Thank you for your support.**		
Electric Market Policy	Yes	1. The draft to PRC-005-2 contains defined terms that upon approval will remain with the standard rather than being moved to the Glossary of Terms. These terms when used in the Requirements are not designated in any way (e.g., capitalization, bold, etc.) to point the reader back to the in-standard definition. 2. Need to explicitly state the intent of the SDT to either (1) use the newly defined term “Protection System (modification)” only in this standard (PRC-005-2) or (2) replace the existing definition of the existing term in the “Glossary of Terms Used in NERC Reliability Standards” with the proposed definition for the existing term. 3. The language used in Footnote 1 on Attachment A does not agree with the definition of Countable events provided elsewhere in the draft standard. Suggest footnote be removed. 4. Requirement R1.5 uses the phrase “or other equivalent parameters” which is confusing. Suggest replacing with “or acceptance criteria.” Requirement R1.5 should read as follows: “Identify calibration program.” The currently proposed language focuses on specific calibration tolerances and acceptance parameters. These tolerances are developed on a per device, per location basis and would be captured at a procedural level, not a program level. To add this at a program level would only complicate the program and would not lend any improvement to the reliability of the bulk electric system. We recommend maintaining a general calibration requirement, similar to what is stated above, for an entity to develop their calibration program. 5. Requirement 2 Component should be replaced with Component Type. Creating a program to monitor the

Organization	Yes or No	Question 5 Comment
		equipment at this level of equipment would not add any value to the bulk electric system as all components should already be included in component type maintenance tasks. Recommend removing the definition of Component. 6. The requirement to address "monitoring attributes" in Requirement 2 for time based maintenance program is unclear, onerous and unnecessary for a reliable protection system program. 7. Requirement (R4) should identify correctible maintenance issues not the resolution of these issues. The language in R4.2 should strike correcting maintenance issues related to R1.5 and instead state: Any maintenance correctible issues found during the maintenance activity should be identified" 8. Table 1.2 change time frame from 3 months to 3 years.
Response: Thank you for your comments. **1. The standard capitalizes defined terms only when they refer to terms which are (or will be) in the NERC Glossary of Terms. Terms will generically be capitalized when appearing at the beginning of a sentence or within a title, in accordance with common editorial practice.** **2. The statement of the definition has been revised in the standard as "NERC Board of Trustees Approved Definition", but will remain in the posted draft standard until it is successfully balloted for the convenience of stakeholders.** **3. The footnote has been removed.** **4. The SDT has determined that the fundamental concerns of Requirement R1, Part 1.5 and the associated changes are addressed within the PSMP definition, and that Requirement R1, Part 1.5 is not necessary; therefore, it has been removed. Requirement R4 has also been re-drafted to address various related concerns noted within comments. The associated VSL has also been revised. Please see Supplementary Reference Document, Section 8 for a discussion of this.** **5. The SDT disagrees; monitoring attributes must be present on the individual components as actually installed, not to the overall component type.** **6. The SDT believes that the verifiable presence of the monitoring attributes on the individual components as installed is a necessary element of using the extended maintenance intervals that result from the monitoring. If you consistently use specific monitoring attributes on all components within a group, they may be able to address these attributes on a global basis. If an entity does not wish to document these attributes, they are free to apply the maintenance intervals and activities specified for the unmonitored components.** **7. Requirement R4 has been revised. The SDT believes it important that the entity initiate resolution of maintenance correctable issues, in addition to simply identifying them.** **8. The SDT believes that the 3-month interval is proper for verification of the functionality of unmonitored communications systems.**		
Bonneville Power Administration	Yes	Some of the maintenance tasks need to be defined: 1. The state of charge of each individual cell may need to be better defined. There are means to verify the

Organization	Yes or No	Question 5 Comment
		state of charge of the entire bank, but not each individual cell. 2. Battery continuity needs to be defined.- There is no mention to what the limits are for the "other equivalent parameters" when performing maintenance activities, just that they need to be identified. There are a large number of battery models which creates a large contrast of parameters, which cannot be grouped together. It is also difficult to get baseline values for older battery models which could result in moving baselines until they become more accurate as the database is populated. 3. If corrective actions are required, is there a maximum allowable duration for when they need to be resolved? 4. The maximum allowable maintenance for station batteries (impedance testing and performance/service testing) is too frequent and suggest an extension or alternative testing methods to stay in compliance. The frequency with which BPA performs the 18 month maintenance tasks as prescribed in the standard are on a 24 month interval along with visual inspections and voltage measurements monthly.BPA has seen success with this maintenance program with the ability to identify suspect cells or entire banks with adequate time to perform corrective actions such as repairs or replacements. 5. BPA also does not perform routine capacity testing, this is an as required maintenance task to confirm/validate our other test results if needed. BPA would like to see clarification for these issues before we can fully support this standard.
Response: Thank you for your comments. **1. Table 1-4 has been revised to remove "state of charge" from the activities.** **2. This is thoroughly discussed in Section 15.4 of the Supplementary Reference Document.** **3. No. The SDT appreciates that some corrective actions for maintenance correctable issues may take an extended period of time to complete, and has therefore not included completion of the corrective actions within PRC-005-2.** **4. The SDT believes that the 18-month interval is proper for these activities.** **5. For vented lead-acid and valve-regulated lead batteries, alternative activities are specified if desired instead of capacity tests. If Ni-Cad batteries are used, capacity tests are required.**		
Santee Cooper	No	We do not agree with the addition of Requirements 1.5 and 4.2 without work on or review by the Power System Maintenance and Testing Drafting Team. While some maintenance activities on some component types (such as calibration testing of electromechanical relays) translate inherently well into these requirements, the requirements of tolerances and documentation do not fit as well to all maintenance activities on other types of equipment considered part of the protective system. These requirements need to

Organization	Yes or No	Question 5 Comment
		be worked on through the drafting team to make them viable and effective for all protective system component types.
Response: Thank you for your comments. The SDT has determined that the fundamental concerns of Requirement R1, Part 1.5 and the associated changes are addressed within the PSMP definition, and that Requirement R1, Part 1.5 is not necessary; therefore, it has been removed. Requirement R4 has also been re-drafted to address various related concerns noted within comments. The associated VSL has also been revised. Please see Supplementary Reference Document, Section 8 for a discussion of this.		
NERC Staff	Yes	1. Commissioning (Initial) Testing: During development of PRC-005-2, NERC staff has observed a trend in system disturbances involving Protection System problems that should have been identified and corrected during commissioning (initial) testing. While NERC staff recognizes that the addition of commissioning testing may be unrealistic at this stage in the standard drafting process, we want to emphasize its importance. If the SDT chooses to leave commissioning testing out at this juncture, we plan to pursue other avenues to ensure its eventual inclusion through a separate standards project. NERC staff agrees with the SDT's opinion that without commissioning testing, a registered entity responsible for compliance with this standard cannot provide proof of its interval testing period as required by the standard. As soon as the entity puts the protective scheme into service, time "0" for interval testing begins. The next testing interval would be some specific number of years in the future from time "0. "An entity's failure to properly commission new protection system equipment has caused or exacerbated several recent events, greatly impacting BPS reliability. The following are examples of errors that were not detected during commissioning. These undetected errors were observed by NERC staff during event analysis and investigation activities: oFailure to apply correct relay settings. This has occurred repeatedly and has been due to improper procedures, poor document control, misapplication or miscalibration of the relay, or a combination of the above. oFailure to install the proper CT or PT ratio occurred due to poor document control practices and resulted in an undesired protection system response after the equipment was placed in service. oFailure to conduct a functional test of new control circuits to the schematic diagram resulted in an undesired protection system response after equipment was placed in service. oAn incorrect CT ratio was not detected during commissioning, and the equipment was subsequently placed in service. Because in-service testing was not performed, the error remained undetected until the relay misoperated during a fault. Many of the above conditions can remain undetected for extended periods, until they are revealed by a

Organization	Yes or No	Question 5 Comment
		relay misoperation during fault or heavy load conditions. The affects resulting from these cases could have been prevented with proper commissioning testing. We believe that by requiring commissioning testing for new protection system equipment, the reliability of BPS would be improved. 2. Requirement 2:In Requirement 2, it is unclear what is meant by “shall verify those components possess the monitoring attributes identified in Tables 1-1 through 1-5 in its PSMP” because the use of terms in the Requirement is not consistent with the column headings used in Tables 1-1 through 1-5. It also is not clear that components need not possess all attributes; rather, they must possess all attributes consistent with the Maximum Maintenance Interval specified in an entity’s PSMP. NERC staff recommends revising R2 to provide additional clarity as follows:”Each Transmission Owner, Generator Owner, and Distribution Provider that uses maintenance intervals for monitored Protection Systems described in Tables 1-1 through 1-5, shall verify those components possess the monitoring attributes Component Attributes identified in the first column of Tables 1-1 through 1-5 consistent with the Maximum Maintenance Interval specified in its PSMP.”
Response: Thank you for your comments. **1. Thank you for your comments.** **2. Requirement R2 of the standard has been modified as you suggested.**		
FirstEnergy	Yes	REQUIREMENTS 1. Requirement R1 - Subpart 1.5 - We do not support this subpart for the following reasons and offer the following suggestions: To satisfy R1.5, a calibration tolerance or other equivalent parameter would have to be established for each item included in the definition. Many devices which may have similar functionality may also have different performance criteria that would preclude the use of a "one size fits all" calibration tolerance. Many of these criteria are provided by the manufacturer and often vary by manufacturer for a similar device. It would be very difficult to specify in your program all of the calibration tolerances or other equivalent parameters associated with the protection system components. Therefore, we suggest the team delete Subpart 1.5 of Req. R1, and revise Subpart 4.2 of Req. R4 to read: "Initiate resolution of any identified maintenance correctable issues at the conclusion of maintenance activities for Protection System components." IMPLEMENTATION PLAN 2. On pg. 2 of the implementation plan, under "Retirement of Existing Standards", the statement "The existing standards PRC-005-1, PRC-008-0, PRC-011-0, and PRC-017-0 shall be retired upon regulatory approval of PRC-005-2" is not accurate. Since the new PRC-005-2 standard allows for at least 12 months

Organization	Yes or No	Question 5 Comment
		to become compliant with Requirement R1 - establish a Protection System Maintenance Program (PSMP) -the existing standards are still effective during this time. Additionally, we have concerns with the "General Considerations" describing protocols for compliance audits conducted during the allowed 12 month development period of the PSMP and that entities could specify for "each component type" whether maintenance of that component is being performed according to its maintenance program under the "retired" PRC maintenance standards or the new PRC-005-2 standard. In our view, this creates a level of compliance complexity for both the Registered Entity and Regional Entity that should be avoided in the transition to PRC-005-2. FirstEnergy proposes that the Implementation Plan state that the existing standards remain in effect for one year past applicable approval (NERC Board or Regulatory) and that they are retired coincident with the one-year transition to Requirement R1 of PRC-005-2 which would establish all Registered Entities having a new PSMP per the expectations of PRC-005-2. At that time all entities would be required to be under the new PRC-005-2 standard and begin implementing their PSMP per the phased-in Implementation Plan for the remaining requirements. To summarize, per our above discussion we propose the team perform the following:1. Revise the Implementation Plan section titled "Retirement of Existing Standards" section to read as follows: "The existing Standards PRC-005-1, PRC-008-0, PRC-011-0 and PRC-017-0 shall be retired on the first day of the first calendar quarter twelve months following applicable regulatory approvals, or in those jurisdictions where no regulatory approval is required, on the first day of the first calendar quarter 12 months following the Board of Trustees adoption"2. Remove the entire "General Considerations" section from the Implementation Plan. 3. The bulleted item under the section titled "Implementation plan for R1" has a discrepancy in the time allowed to implement R1 between entities applicable to regulatory approval of the standard versus those in jurisdictions where no regulatory approval is needed and base their adherence per the Board of Trustee adoption. Please revise to reflect a 12 month transition period for each. DEFINITIONS 4. Maintenance Correctable Issue - This is a maintenance standard and this concept gets into the long term repair activities. Is this really appropriate in this standard? If NERC feels repairing is critical to BES reliability, then they should probably initiate a standard in that area. 5. Component - Regarding the phrase "local zone of protection", why is this in quotes? Is there a narrow definition for this? If so, this term should be defined also. DATA RETENTION SECTION 6. 1.3 Regarding the data retention for Req. R3 and R4, it is not practical to keep potentially 24 years of data for components that are maintained every 12 years. We suggest rewording this to "For R3 and R4, Transmission Owner, Generator Owner, and Distribution Provider shall each keep documentation of the most recent performances of each distinct maintenance activity for the Protection System components, or to the

Organization	Yes or No	Question 5 Comment
		previous scheduled audit date, whichever is longer". 7. ATTACHMENT A - FOOTNOTE 1This footnote regarding countable events needs to be revised to match the definition of countable events found at the beginning of the standard.
Response: Thank you for your comments. **1. The SDT has determined that the fundamental concerns of Requirement R1, Part 1.5 and the associated changes are addressed within the PSMP definition, and that Requirement R1, Part 1.5 is not necessary; therefore, it has been removed. Requirement R4 has also been re-drafted to address various related concerns noted within comments. The associated VSL has also been revised. Please see Supplementary Reference Document, Section 8 for a discussion of this.** **2. The SDT had concluded that Requirement R2 is redundant with Requirement R1, Part 1.4, and has deleted Requirement R2 (together with the associated Measure and VSL).** **3. The Implementation Plan for Requirement R1 has been modified as you suggest.** **4. The SDT believes that the activities necessary to restore a Protection System component to proper service is an essential part of the PSMP. Please note that the related requirements only address initiation of the corrective actions, not completion, in deference to the extended period of time that some of these activities may take.** **5. The quotes have been removed from the definition of component. However, the SDT believes that this term is a commonly-understood term within the industry.** **6. In order that a Compliance Monitor can be assured of compliance, the SDT believes that the Compliance Monitor will need the data of the most recent performance of the maintenance, as well as the data of the preceding one to validate that entities have been in compliance since the last audit (or currently, since the beginning of mandatory compliance). The SDT has specified the data retention in the posted standard to establish this level of documentation. This seems to be consistent with the current practices of several Regional Entities.** **7. This footnote has been removed.**		
Florida Municipal Power Agency	Yes	1. UFLS and UVLS maintenance and testing is greatly expanded, e.g., we interpreted PRC-008/011 as being only the UFLS/UVLS equipment. The new PRC-005 sweeps in other protection system components, e.g., communications (probably not applicable), voltage and current sensing devices (e.g., instrument transformers), Station DC supply, control circuitry. What's key about this is that these components are all part of distribution system protection, so, these activities would not be covered by other BES protection system maintenance and testing. I'm sure we are testing batteries and the like, but, we are probably not testing battery chargers and control circuitry, and, in many cases distribution circuits are such that it is very difficult, if not impossible, to test control circuitry to the trip coil of the breaker without causing an outage of the customers on that distribution circuit. There is no real reliability need for this either. Unlike Transmission and Generation Protection Systems which are needed to clear a fault and

Organization	Yes or No	Question 5 Comment
		may only have one or two back-up systems, there are thousands and thousands of UFLS relays and if one fails to operate, it will not be noticeable to the event. It does make sense to test the relays themselves in part to ensure that the regio0nsl UFLS program is being met, but, to test the other protection system components is not worthwhile. Note that DC Supplies and most of the control circuitry of distribution lines are "tested" frequently by distribution circuits clearing faults such as animals, vegetation blow-ins, lightning, etc., on distribution circuits, reducing the value of testing to just about null. However, this version is better than prior versions because it essentially requires the entity to determine it's own period of maintenance and testing for UFLS/UVLS for DC Supply and control circuitry. 2. Applicability, 4.2.1, should reflect the Y&W and Tri-State interpretation (Project 2009-17) of "transmission Protection System" and should state: "Protection Systems applied on, or designed to provide protection for a BES Facility and that trips a BES Facility" 3. Applicability, 4.2. - does not reflect the interpretation of Project 20009-10 that excludes non-electrical protection (e.g., sudden pressure relays) and auxiliary relays. Because the definition of Protection System (recently approved) does not clearly exclude "non-electrical" protection, the Applicability section should. For instance, a vibration monitor, steam pressure, etc. protection of generators, sudden pressure protection of transformers, etc. should not be included in the standard. An alternative is to change the definition of Protection System to make sure it only includes electrical 4. Table 1-4 requires a comparison of measured battery internal ohmic value to battery baseline. Battery manufacturers typically do not provide this value and one manufacturer states that the baseline test are to be performed after the battery has been in regular float service for 90 days. It is unclear how to comply with the requirement for the initial 90 days. Additionally, we would recommend that this requirement be modified to permit an entity to establish a “baseline” value based on statistical analysis of multiple test results specific to a given battery manufacturer/model. Several commenters previously expressed their concerns with performing capacity tests. While this may just be an entity’s preference, allowing an entity to establish a baseline at some point beyond the initial installation period would give entities the option of using the internal resistance test in lieu of a capacity test. 5. Small entities with only one or two BES substations may not have enough components to take advantage of the expanded maintenance intervals afforded by a performance-based maintenance program. Aggregating these components across different entities doesn’t seem too logical considering the variations at the sub-component level (wire gauge, installation conditions, etc.) 6. Trip circuits are interconnected to perform various functions. Testing a trip path may involve disabling other features (i.e. breaker failure or reclosing) not directly a part of the test being performed. Temporary modifications made for testing introduce a chance to accidentally leave functions disabled, contacts shorted, jumpers lifted, etc. after testing has been completed. Trip coils and cable runs from panels to breaker can be made to meet the requirements for monitored components. The only portions of the

Organization	Yes or No	Question 5 Comment
		circuitry where this may not be the case is in the inter- and intra-panel wiring. Because such portions of the circuitry have no moving parts and are located inside a control house, the exposure is negligible and should not be covered by the requirements. Entities will be at increased compliance risk as they struggle to properly document the testing of all parallel tripping paths. The interconnected nature of tripping circuits will make it difficult to count the number of circuits consistently for the purpose of calculating a VSL.
Response: Thank you for your comments. **1. For UFLS and UVLS, the maintenance activities related to station dc supply and control circuitry are somewhat constrained relative to similar activities for Protection Systems in general. Regardless, without proper functioning of these component types, UFLS and UVLS will not respond as expected, and will therefore degrade BES system reliability, particularly during the stressed system conditions for which UFLS and UVLS are installed. Relative to control circuitry, Table 1-5 specifically excludes UFLS and UVLS from maintenance activities relate to the interrupting device trip coil.** **2. This interpretation is not yet approved by FERC. When this interpretation is approved, the SDT will incorporate it within PRC-005-2** **3. The recently-balloted revision of the definition of Protection System, which has been approved by the NERC Board of Trustees and will soon be filed with FERC for approval, clearly includes only protective relays that respond to electrical quantities. As for auxiliary relays, the interpretation to which you refer states that they are not explicitly included, but are included to the degree that an entity's Protection System control circuitry addresses them (which has been identified as a reliability gap), and are being added to PRC-005-2 to resolve that gap.** **4. Typical baseline values for various types of lead-acid batteries can be obtained from the test equipment manufacturer, perhaps the battery vendor, and perhaps other sources for batteries that are already in service. For new batteries, the initial battery baseline ohmic values should be measured upon installation and used for trending.** **5. Entities are not required to use performance-based maintenance programs. Requirement R3 and Attachment A are provided for the use of entities that can (and desire to) avail themselves of this approach.** **6. The requirement relative to control circuitry does not explicitly require trip or functional testing of the entire path; it requires that entities verify all paths without specifying the method of doing so. Please see Section 15.5 of the Supplementary Reference Document for a detailed discussion.**		
PSEG Companies ("Public Service Enterprise Group Companies")	Yes	1. The facilities listed in 4.2.5.5 include protection systems for "system connected" station service transformers associated with generators that are part of the BES. If a station service transformer is connected to a non BES bus then it would still fall under the PRC5 applicability requirements as written. The FAQs discuss relays associated with station auxiliary loads as not included in the program requirements. The non BES connected transformers should be included in that same category of equipment. 2. From the FAQ's - "Relays which trip breakers serving station auxiliary loads such as pumps, fans, or fuel handling equipment, etc., need not be included in the program even if the loss of the those loads could

Organization	Yes or No	Question 5 Comment
		result in a trip of the generating unit. Furthermore, relays which provide protection to secondary unit substation (SUS) or low switchgear transformers and relays protecting other downstream plant electrical distribution system components are not included in the scope of this program even if a trip of these devices might eventually result in a trip of the generating unit." Suggest the following added details be considered to be consistent with intent of BES connected facilities. Revise Description 4.2.5.5 as follows: "Protection systems for BES system connected station service transformers connected for generators that are part of the BES". 3. With respect to DC supply systems (batteries, chargers),the implementation plan is too aggressive. Some battery checks will have to be done on a 3 month interval, and entities will be required to be compliant with this new frequency in 1 Calendar year. This timeframe is unreasonable and needs to be pushed back to at least 2 years. 4. PSEG is also asking for clarification to the Supplementary reference document: On page 4, section 2.3 it states that the standard is designed to ONLY include "relays that detect a fault on the BES and take action in response to that fault". If PSEG is interpreting this correctly, this is a massive shift from the existing PRC-005-1 standard. The existing PRC-005-1 includes all distribution relays that trip a BES breaker to be part of the scope. In this revision, PRC-005-2 would exclude those distribution relays if they are designed to act for faults on the distribution system. PSEG would fully support this interpretation. PSEG would like this clarified and confirmed. This is very important.
Response: Thank you for your comments. **1. The Applicability of the draft Standard had been revised to remove "system-connected station service transformers".** **2. The FAQs have been merged into the Supplementary Reference Document; this discussion has been revised.** **3. The Implementation Plan for Requirement R4 has been revised to add one year to all established dates.** **4. Section 2.3 of the Supplementary Reference Document has been extensively revised, and the sentence to which you refer is no longer present. As for your comment, "The existing PRC-005-1 includes all distribution relays that trip a BES breaker to be part of the scope," the SDT believes that this is an element of a Regional practice regarding PRC-005-1, and entities should expect to comply with PRC-005 as established within the NERC Standard and further defined by Regional practice.**		
MRO's NERC Standards Review Subcommittee	Yes	1. In the Purpose statement delete "affecting" and replace it with "protecting". The purpose of the standard deals with systems that protect the BES. 2. In sections R1 and R4.2.1 delete "applied on" as unneeded and potentially confusing. The goal is to cover Protection Systems designed to protect the BES.

Organization	Yes or No	Question 5 Comment
		3. The NSRS believes that Article 1.4 needs to be deleted from the standard. It is redundant and serves not purpose. 4. The NSRS believes that Article 1.5 needs to be deleted from the standard. There is a major concern on what an “acceptable parameter” is and how it would be interpreted by the Regional Entities. 5. The NSRS believes that Article 4.2 needs to be deleted from the standard. There is no need for this article if Article 1.5 is deleted. 6. Section 4.2 Applicable Facilities: We are concerned with this paragraph being interpreted differently by the various regions and thereby causing a large increase in scope for Distribution Provider protection systems beyond the reach of UFLS or UVLS.4.2.1 Protection Systems applied on, or designed to provide protection for, the BES. The description is vague and open for different interpretations for what is “applied on” or “designed to provide protection”. According to the November 17, 2010 Draft Supplementary Reference page 4, the Standard will not apply to sub-transmission and distribution circuits, but will apply to any Protection System that is designed to detect a fault on the BES and take action in response to the fault. The Standard Drafting Team does not feel that Protection Systems designed to protect distribution substation equipment are included in the scope of this standard; however, this will be impacted by the Regional Entity interpretations of ‘protecting” the BES. Most distribution protection systems will not react to a fault on the BES, but are caught up in the interpretation due to tripping a breaker(s) on the BES. 7. Section F Supplementary Reference Documents: The references listed in this section refer to 2009 dates and do not match with the 2010 reference documents supplied for comment. 8. Table 1-4 Component Type Station dc Supply: o “Any dc supply for a UFLS or UVLS system” - This should not tied to the same testing interval as control circuits. The dc supply system is significantly different from control circuits and should have a maximum maintenance period as other dc supplies do. 9. Replace the words “perform as designed” on page 14 of Table 1-4 with “operate within defined tolerances.” 10. Table 1-5 Component Type Control Circuitry: a. This table allows for unmonitored trip coils for UFLS or UVLS breakers to have “no periodic maintenance”. “Unmonitored control circuitry associated with protective functions” should also have an exclusion for UFLS and UVLS circuitry that would allow for “no periodic maintenance”. b. There is a concern that requiring the electrical testing and maintenance of Electromechanical trip or Auxiliary devices will force entire bus outages to be scheduled, which will compromise the BES

Organization	Yes or No	Question 5 Comment
		reliability more by forcing utilities across the US to unnecessarily take multiple non-faulted BES elements out of service. Such testing is also likely to introduce human error that will cause outages such as items outlined in the NERC lessons learned" and therefore such testing will result in more outages than actual failures.

Response: Thank you for your comments.

1. **The "Purpose" is defined by the SAR.**
2. **Requirement R1 and Requirement R4, Part 4.2.1 have been modified as you suggested.**
3. **The SDT disagrees; Requirement R1, Part 1.4 supports Requirement R1, Part 1.2, and seems necessary to assure that entities have appropriately applied the longer intervals associated with monitored components.**
4. **The SDT has determined that the fundamental concerns of Requirement R1, Part 1.5 and the associated changes are addressed within the PSMP definition, and that Requirement R1, Part 1.5 is not necessary; therefore, it has been removed. Requirement R4 has also been re-drafted to address various related concerns noted within comments. Please see Supplementary Reference Document, Section for a discussion of this. The associated VSL has also been revised.**
5. **The SDT has determined that the fundamental concerns of Requirement R1, Part 1.5 and the associated changes are addressed within the PSMP definition, and that Requirement R1, Part 1.5 is not necessary; therefore, it has been removed. Requirement R4 has also been re-drafted to address various related concerns noted within comments. The associated VSL has also been revised. Please see Supplementary Reference Document, Section 8 for a discussion of this.**
6. **Applicability 4.2.1 has been revised to remove 'applied on". The SDT believes that this addresses your concern. Applicability 4.2.2 and 4.2.3, respectively, address UFLS and UVLS specifically, and are not related to Applicability 4.2.1. The Supplementary Reference Document has been revised to clarify.**
7. **The date in Clause F of the standard related to the Supplementary Reference Document has been revised.**
8. **The SDT disagrees. Station dc supply for UFLS/UFLS only is limited in its impact, and the SDT believes that using the same intervals as for the related control circuits.**
9. **"Tolerances" does not fully describe the parameters for maintenance of station dc supply; "perform as designed" is far more inclusive.**
10. **a. The SDT intends that tripping of the interrupting device for UFLS/UVLS is not required, but that the other portions of the dc control circuitry still shall be maintained. See Section 15.3 of the Supplementary Reference Document.**

    b. The SDT believes that mechanical solenoid-operated devices share performance attributes (and failure modes) with electromechanical relays and need to be tested at similar intervals. Performance-Based maintenance is an option to increase the intervals if the performance of these devices supports those intervals

Organization	Yes or No	Question 5 Comment
Western Area Power Administration	No	
TransAlta Centralia Generation Partnership	No	
NextEra Energy	Yes	The draft standard is too prescriptive. 1. Requirement R1, Part 1.5 would be overwhelming if approved. Requirement R1, Part 1.5 should be deleted. 2. Requirement R4, Part 4.2 phrase "established in accordance with Requirement R1, Part 1.5" should be deleted. The standard without these additional requirements would be sufficient to establish that the Protection System is maintained and protects the BES. 3. Table 1-2 Component Type Communications Systems Maximum Maintenance Interval of 3 Calendar Months to verify that the communications system is functional for any unmonitored communications system is unyielding. Most communication failures are caused by power supply failures which Next Era does monitor. Based on experience and monitoring of communication power supplies, 12 calendar months would be adequate. The maximum maintenance interval should be changed from 3 calendar months to 12 calendar months. 4. Table 1-4, Component Type Station dc Supply Maximum Maintenance Interval of 3 Calendar Months to inspect electrolyte levels on “Any unmonitored station dc supply not having the monitoring attributes of a category below. (excluding UFLS and UVLS)” is too stringent. Verifying battery charger float voltage every 18 calendar months is sufficient to prevent excessive gassing and water loss of battery cells. The maximum maintenance interval should be changed from 3 calendar months to 6 calendar months. 5. Table 1-4, Component Type Station dc Supply Maximum Maintenance Interval of 3 Calendar Months to measure the internal ohmic values on “Unmonitored Station dc supply with Valve Regulated Lead-Acid (VRLA) batteries that does not have the monitoring attributes of a category below. (excluding UFLS and UVLS)” is too stringent. With the standard’s requirement to verify the float voltage every 18 calendar months, measuring the internal ohmic values every 6 calendar months would be adequate. The maximum maintenance interval should be changed from 3 calendar months to 6 calendar months.

Response: Thank you for your comments.

1. The SDT has determined that the fundamental concerns of Requirement R1, Part 1.5 and the associated changes are addressed within the PSMP definition, and that Requirement R1, Part 1.5 is not necessary; therefore, it has been removed. Requirement R4 has also been re-drafted to

Organization	Yes or No	Question 5 Comment
address various related concerns noted within comments. The associated VSL has also been revised. Please see Supplementary Reference Document, Section 8 for a discussion of this. **2. The SDT has determined that the fundamental concerns of Requirement R1, Part 1.5 and the associated changes are addressed within the PSMP definition, and that Requirement R1, Part 1.5 is not necessary; therefore, it has been removed. Requirement R4 has also been re-drafted to address various related concerns noted within comments. The associated VSL has also been revised. Please see Supplementary Reference Document, Section 8 for a discussion of this.** **3. The activity to which you refer is an inspection-based activity based on overall functionality, and addresses functionality of various communications technologies. If an entity monitors the power supply (as suggested), doing so addresses one portion of the functionality, but does not address channel integrity, etc.** **4. The SDT disagrees, and believes that the specified activities, at the specified intervals, are appropriate.** **5. Table 1-4(b) has been revised as you suggested.**		
City of Austin DBA Austin Energy	Yes	1. The Requirement R1.5. is vague and the intent is not well understood. We recommend it be rewritten to clarify the intent. 2. In the Requirement R2. the phrase "... shall verify those components possess the monitoring attributes ..." is too vague and not easily understandable. We recommend this requirement be rewritten.
Response: Thank you for your comments. **1. The SDT has determined that the fundamental concerns of Requirement R1, Part 1.5 and the associated changes are addressed within the PSMP definition, and that Requirement R1, Part 1.5 is not necessary; therefore, it has been removed. Requirement R4 has also been re-drafted to address various related concerns noted within comments. The associated VSL has also been revised. Please see Supplementary Reference Document, Section 8 for a discussion of this.** **2. The SDT had concluded that Requirement R2 is redundant with Requirement R1, Part 1.4, and has deleted Requirement R2 (together with the associated Measure and VSL).**		
PacifiCorp		
Southern Company Transmission	Yes	1. Page 5, 4.2. ("or initiate resolution") Comment ->> Standard does not specify to "follow through" to completion. Is record of completion required? 2. Page 5, 1.5. (1.5. Identify calibration tolerances or other equivalent parameters for each Protection System component type that establish acceptable parameters for the conclusion of maintenance

Organization	Yes or No	Question 5 Comment
		activities.) Comment ->> This is too vague, broad, general and all encompassing. For example, what is the calibration tolerance for "control circuitry" which is made up of many things such as wiring, auxiliary relays, trip coils, etc. We currently have calibration tolerances on electromechanical relays but not on all components of a protection system (communications systems, voltage and current sensing devices, station dc supply, control circuitry). To try to identify calibration tolerances or other equivalent parameters for each of these components would be extremely difficult and time consuming. Clarification is needed on what components or parts of components require calibration tolerances. Another option is to remove this requirement. 3. Page 5, 4.5. (4.2. Either verify that the components are within the acceptable parameters established in accordance with Requirement R1, Part 1.5 at the conclusion of the maintenance activities, or initiate resolution of any identified maintenance correctable issues.)Comment ->> See comments above on 1.5. Clarification is needed on what is required to verify that the components are within acceptable parameters. We feel it should be adequate to provide a simple way to verify this requirement such as to include this in our maintenance procedure (equipment is to be left within tolerance), provide closed work order, show "checked" check box, provide a simple statement that this was completed, or etc. We feel that having to provide detailed data such as "as found" / "as left" values is too complicated and time consuming. Please clarify or consider removing this requirement. 4. Page 6, M.4. ("and initiated resolution") Comment ->> Standard does not specify to "follow through" to completion. Is record of completion required? 5. Page 10, F.1 (July 2009) & F.2 (DRAFT 1.0 - June 2009) Comment ->> Need new dates and draft number. 6. Page 11 (For microprocessor relays, verify operation of the relay inputs and outputs that are essential ...) Comment ->> Does this require changing the state of the input contacts or can you just jumper voltage to the inputs and verify that the microprocessor relays acknowledged the change? 7. Page 17 ("Verify electrical operation(1)of EM trip and auxiliary devices(2).") Comment ->> (1) Is it required to verify that trip and auxiliary device contacts change state? If so, please state as a requirement.(2) We recommend that this requirement only includes EM aux LO / tripping relays that trip interrupting devices directly. Other EM aux relays such as BFI aux. relays should be excluded. Please state this clearly in the Standard. Note that these aux relays such as BFI aux relays are included

Organization	Yes or No	Question 5 Comment
		in the "unmonitored control circuitry associated with protective functions" requirement and will be verified on a 12 year interval. (3) Please consider including an elementary diagram to show what is included. 8. Page 17 (Verify all paths of the control and trip circuits.) Comment ->> Clarification needed. Is it required to perform a full functional test, i.e. trip breakers? Or is reading DC across trip contacts all that is required? 9. Page 14 (Table 1.4) Change the maintenance interval for unmonitored station dc supply from "3 Calendar Months" to "4 times annually". This facilitates compliance to the standard by creating completion milestones for batteries at the end of each quarter of the year. 10. Page 15 (Table 1.4The standard requires the establishment of a battery baseline for cell/unit internal ohmic values and the comparison of impedance readings every 18 calendar months to that baseline. Due to the lack of original impedance readings at the time of installation of the battery. Since in many cases no such data is available; it needs to be made clear that establishing a baseline from , from manufacturer's data, the most recent impedance test, or the first impedance test completed after the adoption of the new standard is acceptable

Response: Thank you for your comments.

1. **No. Full resolution of maintenance correctable issues may require extensive work; the SDT intends that INITIATION of the resolution is all that is required per PRC-005-2.**
2. **The SDT has determined that the fundamental concerns of Requirement R1, Part 1.5 and the associated changes are addressed within the PSMP definition, and that Requirement R1, Part 1.5 is not necessary; therefore, it has been removed. Requirement R4 has also been re-drafted to address various related concerns noted within comments. The associated VSL has also been revised. Please see Supplementary Reference Document, Section 8 for a discussion of this.**
3. **The SDT has determined that the fundamental concerns of Requirement R1, Part 1.5 and the associated changes are addressed within the PSMP definition, and that Requirement R1, Part 1.5 is not necessary; therefore, it has been removed. Requirement R4 has also been re-drafted to address various related concerns noted within comments. The associated VSL has also been revised. Please see Supplementary Reference Document, Section 8 for a discussion of this.**
4. **No. Full resolution of maintenance correctable issues may require extensive work; the SDT intends that INITIATION of the resolution is all that is required per PRC-005-2.**
5. **The date has been revised.**
6. **The SDT believes that it would be sufficient to apply voltage to the input and observe that the relay responds accordingly.**
7. **1 – "Verify" means "Determine that the component is functioning correctly". The SDT intends that the device be electrically operated, but not that**

Organization	Yes or No	Question 5 Comment
		additional verification be conducted during the electrical operation. However, the 12-year activity for unmonitored control circuitry would require verification of full functionality, including all of the related contacts. 2- The standard has been modified in consideration of your comment. 3 – An elementary diagram would be inappropriate in the standard. Additionally, the design of the control circuitry varies so widely from one application to another that it seems (to the SDT) that it would not be effective to include such an example in the Supplementary Reference Document. **8. The control circuitry can be tested in overlapping segments. It seems to the SDT that it is not necessary to trip the breakers with the functional test, as long as the entity performs the activities necessary to demonstrate that all overlapping segments will function properly.** **9. The SDT believes that your suggestion would not be effective in assuring periodic maintenance of the dc supply.** **10. The station battery baseline value is up to the entity to determine. Please see Clause 15.4.1 of the Supplementary Reference Document for a discussion of this.**
Clark Public Utilities	No	
Exelon	Yes	1. In response to Exelon's comments provided to drafts 1 and 2 of PRC-005, the SDT did not explain why a conflict with an existing regulatory requirement is acceptable. The SDT responded that a conflict does not exist and that the removal of grace periods simply is there to comply with FERC Order directive 693. This response does not answer or address dual regulation by the NRC and by the FERC. Specifically, the request has not been adequately considered for an allowance for NRC-licensed generating units to default to existing Operating License Technical Specification Surveillance Requirements if there is a maintenance interval that would force shutting down a unit prematurely or become non-compliant with PRC-005. Therefore, Exelon requests that the SDT communicate with the NRC and with the FERC to ensure a conflict of dual regulation is not imposed on a nuclear generating unit without the necessary evaluation. 2. In addition, although Exelon Nuclear agrees with the SDT that the maximum allowed battery capacity testing intervals of not to exceed 6 calendar years for vented lead acid or NiCad batteries (not to exceed 3 calendar years for VRLA batteries) could be integrated within the plant's routine 18 month to 2 year interval refueling outage schedule, the SDT has not considered that nuclear refueling outages may be extended past the 18 month to 2 year "normal" periodicity. There are some unique factors related to nuclear generating units that the SDT has not taken into consideration in that these units are typically online continuously between refueling outages without shutting down for any other required maintenance. Historically, generating units have at times extended planned refueling outage shutdown dates days and even weeks due to requests from transmission operations, fuel issues and electrical demand. Without the grace period exclusion currently allowed by existing maintenance programs, a nuclear plant will be forced to either extend outage duration to include testing on an every other refueling outage (i.e., every four years to ensure compliance for a typical boiling water reactor) or leave the testing on a six year periodicity with the vulnerability of a forced shut down simply to perform maintenance to meet the six year periodicity

Organization	Yes or No	Question 5 Comment
		or a self report of non-compliance. To ensure compliance, the nuclear industry will be forced to schedule battery testing on a four year periodicity to ensure the six year periodicity is met, thus imposing a requirement on nuclear generating units that would not apply to other types of generating units. 3. In addition, Exelon has the following technical comments a. Sections 4.2.5.4 and 4.2.5.5 need to clearly state that only protection which affects the BES is within the scope of the PRC-005. b. There is not enough clarity in the statement "each protection system component type" for one to stay at the component level vs. dropping to sub-component level. If sub-components reviews are required, the effort becomes unmanageable. Therefore the Standard should identify calibration tolerances or other equivalent parameters. Suggest rewording to "each protection system major component type"
Response: Thank you for your comments. **1. If several different regulatory agencies have differing requirements for similar equipment, it seems that the entity must be compliant with the most stringent of the varying requirements. In the cited case, an entity may need to perform maintenance more frequently than specified within the requirements to assure that they are compliant.** **2. The 18-month (and shorter) interval activities are activities that can be completed without outages – primarily inspection-related activities. An entity may need to perform maintenance more frequently than specified within the requirements to assure that they are compliant.** **3. a. Applicability 4.2.5.5 has been removed. Generator-connected station service transformers are essential to the continuing operation of the generating plant; therefore, protection on these system components is included within PRC-005-2 if the generation plant is a BES facility.** **b.The SDT has determined that the fundamental concerns of Requirement R1, Part 1.5 and the associated changes are addressed within the PSMP definition, and that Requirement R1, Part 1.5 is not necessary; therefore, it has been removed. Requirement R4 has also been re-drafted to address various related concerns noted within comments. The associated VSL has also been revised. Please see Supplementary Reference Document, Section 8 for a discussion of this.**		
Manitoba Hydro	Yes	1) We disagree with the requirements for battery maintenance outlined in table 1-4. In particular the requirement for a 3 month check on electrolyte level seems too frequent based on our experience. We would like to point out that although IEEE std 450 (which seems to be the basis for table 1-4) does recommend intervals it also states that users should evaluate these recommendations against their own operating experience. 2) Also, the Implementation Plan is not consistent for areas requiring regulatory approval and areas requiring regulatory approval. The 6 month time frame proposed for R1 for areas not requiring regulatory approval is not achievable and is not consistent with areas requiring regulatory approval. To be consistent, the effective

Organization	Yes or No	Question 5 Comment
		date for R1 in jurisdictions where no regulatory approval is required should be the first day of the first calendar quarter 12 months after BOT approval.
Response: Thank you for your comments. **1. The SDT believes that the 3-month interval specified in the standard is appropriate.** **2. In consideration of your comment, "6" has been modified to "12" in the Implementation Plan for Requiremnet R1.**		
Dynegy Inc.	Yes	For R1.5, we feel to much is being asked for since this information is not easilly controlled and the tolerances vary over time.
Response: Thank you for your comments. The SDT has determined that the fundamental concerns of Requirement R1, Part 1.5 and the associated changes are addressed within the PSMP definition, and that Requirement R1, Part 1.5 is not necessary; therefore, it has been removed. Requirement R4 has also been re-drafted to address various related concerns noted within comments. The associated VSL has also been revised. Please see Supplementary Reference Document, Section 8 for a discussion of this.		
Oncor Electric Delivery Company LLC	Yes	Comment A: Oncor believes that Requirement R1 Part 1.5 of this Standard should be removed. It is too vague, intrusive, and divisive for what it brings to the reliability of the BES. Specifically it burdens all Transmission Owners, Generation Owners or Distribution Providers with the impossible task of having to "identify calibration tolerances or other equivalent parameters for each Protection System component type that establish acceptable parameters for the conclusion of maintenance activities." By definition a Protection System component type is "any one of the five specific elements of the Protection System definition" and "a component is any individual discrete piece of equipment included in a Protection System, such as a protective relay or current sensing device." What Requirement R1 part 1.5 with its associated High VSL in the Standard would decree is that all Transmission Owners, Generation Owners and Distribution Providers who "failed to establish calibration tolerance or equivalent parameters to determine if every individual discrete piece of equipment in a Protection System is within acceptable parameters" would be in violation of the Standard - with a High VSL. Oncor with over 98 years of Protection System maintenance experience feels that most Owners including itself would be non-compliant with this unclear, meddling and disruptive requirement no matter how long the implementation plan for the Standard is. Comment B: Oncor believes that in light of Comment "A" above Requirement R4 Part 4.2 must be modified to remove all references to Requirement R1 Part 1.5 of the Standard. The new requirement should be modified to read "Either verify that the components are within acceptable parameters at the conclusion of the maintenance activities or initiate any necessary activities to correct maintenance correctable issues." Also in order to assist both the owners and the compliance authorities who may question how one verifies that the components are within acceptable parameters the FAQ document should be modified to discuss how many

Organization	Yes or No	Question 5 Comment
		utilities are doing this with results that indicate either a pass or fail certified by the qualified persons performing maintenance. Comment C: Oncor feels that the wording "no less frequently than" found in Requirement R4 Parts 4.1.1 and 4.1.2 should be chanced back to the wording in the previous version of the Standard "not to exceed." Comment D: Oncor recommends that in light of Comment "A" above Measure M1 be modified to remove all reference to Requirement R1 Part 1.5. Comment E: Oncor, as stated in Comment "B" above, recommends that the FAQ document be modified to provide more information on what could be used for evidence that the Transmission Owner, Generation Owner or Distribution Provider has "initiated resolution of identified maintenance correctable issues." This will assist both the owners and the compliance authorities in answering the question of what constitutes proof that a maintenance correctable issue was identified. Comment F: The second and third paragraphs added under Compliance 1.3 Data Retention provide more information as to what data is required to be retained. Oncor feels that these two paragraphs will help the compliance authorities, the Transmission Owners, Generation Owners and Distribution Providers needed guidance of what is required for data retention.

Response: Thank you for your comments.

A. The SDT has determined that the fundamental concerns of Requirement R1, Part 1.5 and the associated changes are addressed within the PSMP definition, and that Requirement R1, Part 1.5 is not necessary; therefore, it has been removed. Requirement R4 has also been re-drafted to address various related concerns noted within comments. The associated VSL has also been revised. Please see Supplementary Reference Document, Section 8 for a discussion of this.

B. The SDT has determined that the fundamental concerns of Requirement R1, Part 1.5 and the associated changes are addressed within the PSMP definition, and that Requirement R1, Part 1.5 is not necessary; therefore, it has been removed. Requirement R4 has also been re-drafted to address various related concerns noted within comments. The associated VSL has also been revised. Please see Supplementary Reference Document, Section 8 for a discussion of this.

C. "No less frequently than" was adopted on recommendation of NERC Staff as the preferred method of addressing this requirement.

D. The SDT has determined that the fundamental concerns of Requirement R1, Part 1.5 and the associated changes are addressed within the PSMP definition, and that Requirement R1, Part 1.5 is not necessary; therefore, it has been removed. Requirement R4 has also been re-drafted to address various related concerns noted within comments. The associated VSL has also been revised. Please see Supplementary Reference Document, Section 8 for a discussion of this.

E. The SDT has decided to eliminate the FAQ and incorporate topics and discussion from the FAQ within the Supplementary Reference Document. Your comments will be considered within that activity.

Organization	Yes or No	Question 5 Comment
F. Thank you for your comment.		
Ingleside Cogeneration LP		The latest version of PRC-005-2 includes a new requirement (R1.5) to identify calibration tolerances or equivalent parameters that must be verified before a maintenance activity is considered complete. Although we understand the project team's intent, Ingleside Cogeneration LP is concerned that this requirement will lead to multiple interpretations of which tolerances or parameters are the most important. In addition, audit teams may expect to see certain values based upon their own sense of reliability. This is exactly the ambiguity that PRC-005-2 is trying to eliminate. In addition, calibration tolerances and reliability parameters may vary by equipment manufacturer or by configuration. It is not clear that documenting every scenario to demonstrate regulatory compliance is a benefit to BES reliability.
Response: Thank you for your comments. The SDT has determined that the fundamental concerns of Requirement R1, Part 1.5 and the associated changes are addressed within the PSMP definition, and that Requirement R1, Part 1.5 is not necessary; therefore, it has been removed. Requirement R4 has also been re-drafted to address various related concerns noted within comments. The associated VSL has also been revised. Please see Supplementary Reference Document, Section 8 for a discussion of this.		
Indiana Municipal Power Agency	Yes	Standard PRC-005-2 Draft 3 contains a section of "Definitions of Terms Used in Standard" that includes newly defined or revised terms uses in this proposed standard. There are a number of references made to these Terms in the Standard that are not capitalized. IMPA would propose that anywhere that the terms included in the "Definition of Terms Used" are used in the standard that they be capitalized. When any word is not capitalized in a standard then the common practice is to use the Webster Dictionary meaning. IMPA does not know why the SDT is reluctant to put these terms in the NERC Glossary of Terms, but by putting the terms in the glossary it would eliminate any confusion. When these terms are capitalized all registered entities will know that these are defined terms and will be able to consistently apply the definition without confusion. For example: 1.1 Address all Protection System component types would become1.1 Address all Protection System Component Types. If these terms are not capitalized in the standard (meaning they are not referring to the defined term) then the meaning of these terms could vary not only from utility to utility but also from Region to Region.
Response: Thank you for your comments. The standard capitalizes defined terms only when they refer to terms which are (or will be) in the NERC Glossary of Terms. Terms will generically be capitalized when appearing at the beginning of a sentence or within a title, in accordance with common editorial practice. If the terms were placed in the Glossary of Terms, the SDT is concerned that some future SDT, in order to utilize these terms, may change them in a fashion inconsistent with the intended usage within PRC-005-2.		

Organization	Yes or No	Question 5 Comment
South Carolina Electric and Gas		
Entergy Services	Yes	Adding Requirement 1.5 is a significant revision and raises questions as to how broadly an accuracy or equivalent parameter requirement and associated documentation would need to be addressed by entities and/or will be measured for compliance. Discussion on this new requirement does not seem to be addressed anywhere in the FAQ or Supplementary Reference documents. Additionally, to the best of our knowledge, the need for such a requirement was not brought up as a concern or comment on the prior draft version of this standard, and in the context of a requirement need, we don't believe it has been attributed to or actually poses any significant reliability risk. We do not believe this requirement is justified.
Response: Thank you for your comments. The SDT has determined that the fundamental concerns of Requirement R1, Part 1.5 and the associated changes are addressed within the PSMP definition, and that Requirement R1, Part 1.5 is not necessary; therefore, it has been removed. Requirement R4 has also been re-drafted to address various related concerns noted within comments. The associated VSL has also been revised. Please see Supplementary Reference Document, Section 8 for a discussion of this.		
Duke Energy	Yes	1. We have previously commented that the FAQ and Supplementary Reference documents should be made part of this standard. If that cannot be done, then more of the information in those documents needs to be included in the requirements in the standard to provide clarity. Compliance will only be measured against what is in the standard, and we need more clarity. 2. R1.4 and R1.5 need more information to provide clarity for compliance. It's unclear to us what the expectation is for compliance documentation for "monitoring attributes and related maintenance activities" in R1.4 and "calibration tolerances or other equivalent parameters" in R1.5. This is fairly straightforward for relays, but not for other component types. Either provide clarity or delete these requirements. 3. R4.2 - it is critical that more clarity be provided for R1.5 so that we can also understand what the compliance expectation is for R4.2 4. M4 - Need to clarify that these pieces of evidence are all "or", not "and" (i.e. any of the listed examples are sufficient for compliance). We reiterate the need for additional clarity on R1.5 and R4.2 such that compliance can be demonstrated for all component types. 5. Table 2 - We are fairly clear on the expectation for relays, but need more clarity on the expectation for other component types. Also, need to change the phrase "corrective action can be taken" to "corrective action can be initiated", consistent with the Supplementary Reference document.
Response: Thank you for your comments.		

Organization	Yes or No	Question 5 Comment
1. The SDT has decided to eliminate the FAQ and incorporate topics and discussion from the FAQ within the Supplementary Reference Document. The SDT believes that entities should be able to implement the standard without the Supplementary Reference. However, the SDT is also convinced that many entities may find the supporting discussion/rationale/etc useful, particularly to assist them in implementing the standard in an efficient manner. **2. Requirement R1, Part 1.4 has been modified for clarity. The SDT has determined that the fundamental concerns of Requirement R1, Part 1.5 and the associated changes are addressed within the PSMP definition, and that Requirement R1, Part 1.5 is not necessary; therefore, it has been removed. Requirement R4 has also been re-drafted to address various related concerns noted within comments. The associated VSL has also been revised. Please see Supplementary Reference Document, Section 8 for a discussion of this.** **3. The SDT has determined that the fundamental concerns of Requirement R1, Part 1.5 and the associated changes are addressed within the PSMP definition, and that Requirement R1, Part 1.5 is not necessary; therefore, it has been removed. Requirement R4 has also been re-drafted to address various related concerns noted within comments. The associated VSL has also been revised. Please see Supplementary Reference Document, Section 8 for a discussion of this.** **4. The SDT has provided examples of the sort of evidence that may serve to demonstrate compliance. The degree to which any single evidence type is sufficient is dependent on the completeness of the evidence itself. The Measure has been modified to clarify this point.** **5. Table 2 has been modified to be clearer. "Taken" has been replaced with "initiated" in consideration of your comment.**		
Wisconsin Electric Power Company		
Independent Electricity System Operator	Yes	1. Requirement R1, Part 1.5 is vague and needs clarification. It is not clear what "Identify calibration tolerances or other equivalent parameters" means and this may be subject to different interpretations by entities and compliance enforcement personnel. 2. Additionally, in the Implementation plan for Requirement R1, we recommend changing "six" to "fifteen" to restore the 3-month time difference between the durations of the implementation periods for jurisdictions that do and don't require regulatory approval, which existed in the previous draft. This change will ensure equity for those entities located in jurisdictions that do not require regulatory approval as is the case here in Ontario. More importantly it supports the IESO's strong belief in the principle that reliability standards should be implemented in an orderly and coordinated fashion across regions to ensure system reliability is not compromised.
Response: Thank you for your comments. **1. The SDT has determined that the fundamental concerns of Requirement R1, Part 1.5 and the associated changes are addressed within the PSMP definition, and that Requirement R1, Part 1.5 is not necessary; therefore, it has been removed. Requirement R4 has also been re-drafted to address various related concerns noted within comments. The associated VSL has also been revised. Please see Supplementary Reference**		

Organization	Yes or No	Question 5 Comment
Document, Section 8 for a discussion of this. **2. In consideration of your comment, "6" has been modified to "12" in the Implementation Plan for Requirement R1.**		
American Electric Power		1. Standards Requirement 1.5 and the reference to R1.5 in Requirement 4.2 should be removed. Specifying calibration tolerances for every protection system component type, while a seemingly good idea, represents a substantial change in the direction of the standard. It would be very onerous for companies to maintain a list of calibration tolerances for every protection system component type and show evidence of such at an audit. AEP believes entities need the flexibility to determine what acceptance criteria is warranted and need discretion to apply real-time engineering/technician judgment where appropriate. 2. Three different types of maintenance programs (time-based, performance-based and condition-based) are referenced in the standard or VSLs, yet the time-based and condition-based programs are neither defined nor described. Certain terms defined within the definition section (such as Countable Event or Segment) only make sense knowing what those three programs entail. These programs should be described within the standard itself and not assume knowledge of material in the Supplementary Reference or FAQ. 3. "Protective relay" should be a defined term that lists relay function for applicability. There are numerous 'relays' used in protection and control schemes that could be lumped in and be erroneously included as part of a Protection System. For example, reclosing or synchronizing relays respond to voltage and hence could be viewed by an auditor as protective relays, but they in fact perform traditional control functions versus traditional protective functions. 4. The Data Retention requirement of keeping maintenance records for the two most recent maintenance performances is a significant hurdle for any owners to abide by during the initial implementation period. The implementation plan needs to account for this such that Registered Entities do not have to provide retroactive testing information that was not explicitly required in the past.
Response: Response: Thank you for your comments. **1. The SDT has determined that the fundamental concerns of Requirement R1, Part 1.5 and the associated changes are addressed within the PSMP definition, and that Requirement R1, Part 1.5 is not necessary; therefore, it has been removed. Requirement R4 has also been re-drafted to address various related concerns noted within comments. The associated VSL has also been revised. Please see Supplementary Reference Document, Section 8 for a discussion of this.** **2. The term, "condition-based" has been removed from the draft standard. The other terms are used, but are clear in the context in which they are used.** **3. "Protective relay" is defined by IEEE, and the SDT sees no need to either change the definition or to repeat the definition within PRC-005. Further,**		

Organization	Yes or No	Question 5 Comment
the applicability of generically-described protective relays is defined by the Applicability clause of PRC-005-2. **4. In order that a Compliance Monitor can be assured of compliance, the SDT believes that the Compliance Monitor will need the data of the most recent performance of the maintenance, as well as the data of the preceding one to validate that entities have been in compliance since the last audit (or currently, since the beginning of mandatory compliance). The SDT has specified the data retention in the posted standard to establish this level of documentation. This seems to be consistent with the current practices of several Regional Entities.**		
ITC	Yes	1. We would like some further clarification on PRC-005-2 Draft 3, specifically on the statement in Table 1-4 for unmonitored station DC supply with VLA batteries. In the table it is mentioned that we are to perform either a capacity test every six years or verify that the station battery can perform as designed by evaluating the measured cell/unit internal ohmic values to station battery baseline, the latter statement is a little vague and needs further clarification with regards to the expectations from the standard. Please describe an acceptable method of establishing a baseline "measured cell/unit internal ohmic value" We would like to know what exactly is required. We measure the cell internal ohmic value on an annual basis every 12 months, is that enough? What are the comparison parameters with regards to battery baseline? At what percent should we look to replace the cell? 2. Is a battery system that only supplies the SCADA RTU considered part of the protective system if alarms for the monitored protective systems utilize that SCADA RTU?
Response: Response: Thank you for your comments. **1. The station battery baseline value is up to the entity to determine. Please see Section 15.4.1 of the Supplementary Reference for a discussion of this.** **2. No. The Applicability of the standard limits the standard to only those devices within the Protection.**		
ISO New England Inc.		1. In general, the standard is overly prescriptive and complex. It should not be necessary for a standard at this level to be as detailed and complex as this standard is. Entities working with manufacturers, and knowledge gained from experience can develop adequate maintenance and testing programs. 2. Why are "Relays that respond to non-electrical inputs or impulses (such as, but not limited to, vibration, pressure, seismic, thermal or gas accumulation)..." not included? The output contacts from these devices are oftentimes connected in tripping or control circuits to isolate problem equipment. 3. Due to the critical nature of the trip coil, it must be maintained more frequently if it is not monitored. Trip coils are also considered in the standard as being part of the control circuitry. Table 1-5 has a row labeled "Unmonitored Control circuitry associated with protective functions", which would include trip coils,

Organization	Yes or No	Question 5 Comment
		has a "Maximum Maintenance Interval" of "12 Calendar Years". Any control circuit could fail at any time, but an unmonitored control circuit could fail, and remain undetected for years with the times specified in the Table (it might only be 6 years if I understand that as being the trip test interval specified in the table). Regardless, if a breaker is unable to trip because of control circuit failure, then the system must be operated in real time assuming that that breaker will not trip for a fault or an event, and backup facilities would be called upon to operate. Thus, for a line fault with a "stuck" breaker (a breaker unable to trip), instead of one line tripping, you might have many more lines deloaded or tripped because of a bus having to be cleared because of a breaker failure initiation. The bulk electric system would have to be operated to handle this contingency. 4. In reference to the FAQ document, Section 5 on Station dc Supply, Question K, clarification is needed with respect to dc supplies for communication within the substation. For example, if the communication systems were run off a separate battery in separate area in a substation, would the standard apply to these batteries or not? 5. To define terms only as they are used in PRC-005-2 is inviting confusion. Although they may be unique to PRC-005-2, some or all of them may be used in future standards, some already may be used in existing standards, and may or may not be deliberately defined. Consistency must be maintained, not only for administrative purposes, but for effective technical communications as well. 6. What is the definition of "Maintenance" as used in the table column "Maximum Maintenance Interval"? Maintenance can range from cleaning a relay cover to a full calibration of a relay. 7. A control circuit is not a component, it is made up of components. 8. Sub-requirement 1.5 needs to be clarified. It is not clear what "Identify calibration tolerances or other equivalent parameters..." means, and may be subject to different interpretations by entities and compliance enforcement personnel. 9. In the Implementation plan for Requirement R1, recommend changing "six" to fifteen. This change would restore the 3-month time difference that existed in the previous draft, between the durations of the implementation periods for jurisdictions that do and do not require regulatory approval. It will ensure equity for those entities located in jurisdictions that do not require regulatory approval, as is the case in Ontario. 10. The 'box' for "Monitored Station dc supply..." in Table 1-4 is not clear. It seems to continue to the next page to a new box. There are multiple activities without clear delineation.
Response: Thank you for your comments. **1. The intervals and activities specified are believed by the SDT to be technically effective, in a fashion that may be consistently monitored for**		

Organization	Yes or No	Question 5 Comment
		compliance. Further, FERC Order 693 directs NERC to establish maximum allowable intervals, which implies that minimum activities also need be prescribed. If an entities' experience is that components require less-frequent maintenance, a performance-based program in accordance with R3 and Attachment A is an option. **2. The SDT concentrated their efforts on protective relays which use the entire group of component types within the Protection System definition. Also, there is currently no technical basis for the maintenance of the devices which respond to non-electrical quantities on which to base mandatory standards related either to activities or intervals. Absent such a technical basis, we are currently unable to establish mandatory requirements, but may do so in the future if such a technical basis becomes available.** **3. According to Table 1-5, trip coils of interrupting devices must be verified to operate every 6 years, rather than the 12-year interval. You are free to maintain these devices more frequently if you desire.** **4. With respect to dc supply associated only with communications systems, we prescribe, within Table 1-2, that the communications system must be verified as functional every 3 months, unless the functionality is verified by monitoring. The specific station dc supply requirements (Table 1-4) do not apply to the dc supply associated only with communications systems. The SDT has decided to eliminate the FAQ and incorporate topics and discussion from the FAQ within the Supplementary Reference Document. Your comments will be considered within that activity.** **5. The SDT has proposed these terms for use only within PRC-005-2 because we are concerned that other uses of these terms, either now or in the future, may not be consistent with the terms as used here. They are defined only for clarify within this standard. The SDT will confirm with NERC staff that this approach is acceptable.** **6. As used in the "Maximum Maintenance Interval" column title of the table, maintenance refers to whatever activities are specified in the Activities column. The term is capitalized in the column title in conformance with normal editorial practice as a title, rather than as a definition** **7. For purposes of this standard, the control circuit IS defined as one component type.** **8. The SDT has determined that the fundamental concerns of Requirement R1, Part 1.5 and the associated changes are addressed within the PSMP definition, and that Requirement R1, Part 1.5 is not necessary; therefore, it has been removed. Requirement R4 has also been re-drafted to address various related concerns noted within comments. The associated VSL has also been revised. Please see Supplementary Reference Document, Section 8 for a discussion of this.** **9. In consideration of your comment, "six" has been modified to "twelve" in the Implementation Plan for Requirement R1, making it consistent with the remainder of the Implementation Plan.** **10. Table 1-4 has been further modified for clarity**
Nebraska Public Power District	Yes	Definitions: 1. The PSMP definition inappropriately extends the maintenance program to include corrective maintenance. The first bullet of the Detailed Description section of the SAR specifically states: "Analysis of correct operations or misoperations may be an integral part of condition-based maintenance processes, but need not be mandated in a maintenance standard." The comment in the SAR was

Organization	Yes or No	Question 5 Comment
		directed toward the Purpose of PRC-017 since it is the only one of the applicable PRC standards that included corrective measures in its Purpose. However, the concept of not including corrective maintenance in a maintenance standard should apply to all of the applicable PRC standards. The same statement from the SAR identified above was also included in the NERC SPCTF Assessment of Standards referenced in the SAR. Neither the SAR nor the NERC SPCTF Assessment of the Standards identified the need to expand the maintenance and testing program to include corrective maintenance. I recommend deleting the words "and proper operation of malfunctioning components is restored." from the first sentence of the PSMP definition. I believe that failure to do so exceeds the scope of the SAR. 2. The definition of a Countable Event should clearly state whether or not multiple conditions on a single component will count as a single Countable Event or as multiple Countable Events. For example, a single relay fails its undervoltage setting and its under frequency setting. Is this one Countable Event or two Countable Events? 3. Applicability Part 4.2.2:The ERO does not establish underfrequency load-shedding requirements. Those requirements will be established by Reliability Standard PRC-006-1 when it is approved by FERC. I recommend changing Accountability Part 4.2.2. to "...installed to provide last resort system preservation measures." (Note this wording is consistent with the Purpose of PRC-006-0.)Applicability Part 4.2.5.4 and 4.2.5.5: 4. Station Service transformers provide energy to plant loads and not the BES. If these plant transformers are included, why not include the rest of the plant systems? I recommend deleting Applicability Part 4.2.5.4 and 4.2.5.5. 5. Requirement R1 Part 1.2: The wording of the first sentence is unclear about what information is required. For example, I could state in my PSMP that: "All Protection System component types are addressed through time-based, performance-based, or a combination of these maintenance methods" and be compliant with the Requirement. I recommend re-wording the first sentence to state: "Identify which maintenance method is used to address each Protection System component type. Options include time-based, performance-based (per PRC-005 Attachment A), or a combination of time-based and performance-based (per PRC-005 Attachment A)." Note that PRC-005 Attachment A does not address a combination of maintenance methods and therefore the second reference in the first sentence should be removed if the original wording is retained. 6. Requirement R1 Part 1.4: The column titles in Tables 1-1 through 1-5 have been revised to “Component Attributes” and “Activities”. I recommend changing "monitoring attributes" to "component attributes" and "maintenance activities" to "activities" to be consistent with the Tables. 7. Requirement R1 Part 1.5: Maintenance acceptance criteria for a given Protection System component type may very depending on the manufacturer, model, etc.. Including all acceptance criteria in the PSMP

Organization	Yes or No	Question 5 Comment
		document will over-complicate the program document. I recommend clarifying Part 1.5 to allow the incorporation of device-specific acceptance criteria in the applicable evidentiary documentation. One possible option is to add a second sentence as follows: "The calibration tolerances or other equivalent parameters may be included with the maintenance records." Note that a personal preference would be to use the phrase “acceptance criteria” instead of “calibration tolerances or other equivalent parameters”. 8. Requirement R4:The PSMP definition inappropriately extends the maintenance program to include corrective maintenance. The first bullet of the Detailed Description section of the SAR specifically states: "Analysis of correct operations or misoperations may be an integral part of condition-based maintenance processes, but need not be mandated in a maintenance standard." The comment in the SAR was directed toward the Purpose of PRC-017 since it is the only one of the applicable PRC standards that included corrective measures in its Purpose. However, the concept of not including corrective maintenance in a maintenance standard should apply to all of the applicable PRC standards. The same statement from the SAR identified above was also included in the NERC SPCTF Assessment of Standards referenced in the SAR. Neither the SAR nor the NERC SPCTF Assessment of the Standards identified the need to expand the maintenance and testing program to include corrective maintenance. I recommend deleting the words "including identification of the resolution of all maintenance correctable issues" from the first sentence of the Requirement. I believe that failure to do so exceeds the scope of the SAR. 9. Requirement R4 Part 4.2: What is considered sufficient verification of parameters? Does this require an engineer or technician signature or simply an indication of pass/fail? The PSMP definition inappropriately extends the maintenance program to include corrective maintenance. The first bullet of the Detailed Description section of the SAR specifically states: "Analysis of correct operations or misoperations may be an integral part of condition-based maintenance processes, but need not be mandated in a maintenance standard." The comment in the SAR was directed toward the Purpose of PRC-017 since it is the only one of the applicable PRC standards that included corrective measures in its Purpose. However, the concept of not including corrective maintenance in a maintenance standard should apply to all of the applicable PRC standards. The same statement from the SAR identified above was also included in the NERC SPCTF Assessment of Standards referenced in the SAR. Neither the SAR nor the NERC SPCTF Assessment of the Standards identified the need to expand the maintenance and testing program to include corrective maintenance. I recommend re-wording Requirement 4, Part 4.2 to state: "Verify that the components are within the acceptable parameters established in accordance with Requirement R1, Part 1.5 at the conclusion of the maintenance activities." I believe that failure to do so exceeds the scope of the SAR. 10. Measurement M2: Can a single specification document suffice for similar relay types such as one document for SEL relays? For trip circuit monitoring can a standard document be used for a group of

Organization	Yes or No	Question 5 Comment
		similar schemes ? 11. Measurement M4:I assume this is not an all inclusive list of potential forms of evidence. Please clarify what is meant by "such as". Does this mean that: 1) Any one item is sufficient?; 2) Certain combinations of evidence are necessary? If so, what combinations?; 3) Are other items that are not identified here acceptable? 12. Measurement M4 repeatedly refers to "dated" evidence. However, current audit expectations include either performer signatures or initials on the evidence in addition to the dates. Please revise Measurement M4 to clearly state the expectations regarding performer signatures or initials on the evidence documents. 13. The PSMP definition inappropriately extends the maintenance program to include corrective maintenance. The first bullet of the Detailed Description section of the SAR specifically states: "Analysis of correct operations or misoperations may be an integral part of condition-based maintenance processes, but need not be mandated in a maintenance standard." The comment in the SAR was directed toward the Purpose of PRC-017 since it is the only one of the applicable PRC standards that included corrective measures in its Purpose. However, the concept of not including corrective maintenance in a maintenance standard should apply to all of the applicable PRC standards. The same statement from the SAR identified above was also included in the NERC SPCTF Assessment of Standards referenced in the SAR. Neither the SAR nor the NERC SPCTF Assessment of the Standards identified the need to expand the maintenance and testing program to include corrective maintenance. I recommend deleting the words: "and initiated resolution of identified maintenance correctable issues" from the last sentence of Measurement M4. I believe that failure to do so exceeds the scope of the SAR 14. .Compliance Part 1.3: Tables 1-1 through 1-5 refers to time-based maintenance programs. I recommend changing "performance-based" to "time-based" in the last sentence of the third paragraph. 15. The last paragraph of Part 1.3 of the Compliance Section states: "The Compliance Enforcement Authority shall keep the last periodic audit report and all requested and submitted subsequent compliance records." This appears to be a requirement of the Compliance Enforcement Authority however they are not identified in Section 4 Applicability of the Standard. It is also in conflict with the SAR Attachment B - Reliability Standard Review Guidelines which states on page SAR-10: "Do not write any requirements for the Regional Reliability Organization. Any requirements currently assigned to the RRO should be re-assigned to the applicable functional entity." I recommend deleting the last paragraph of Part 1.3 of the Compliance Section to avoid conflict with the SAR. 16. Table 1-1: The Activity of row 1 states: “Verify operation of the relay inputs and outputs that are essential to ...” Please clarify what is meant by “operation of” the relay inputs and outputs. What is the criteria to determine if something is “essential”? The first line of row 2 has a double colon. Please delete one of

Organization	Yes or No	Question 5 Comment
		them. 17. For the second bullet of row 2 column 1, please clarify what is meant by the last part of this sentence "that are also performing self monitoring and alarming" and how it relates to the voltage and current sampling required. It appears the self monitoring is required in the first bullet. 18. For the first bullet of row 2 column 3, many relay settings may not be essential to the protective function of the relay. I recommend revising the first bullet to: “Settings that are essential to the proper function of the protection system are as specified.” 19. The format of the Activities column for all three rows is different. Please reformat them to be consistent. My preference is the second row. 20. Table 1-2: Row 1 Column 2, verifying the functionality of communications systems on a 3 calendar months basis is excessive and unnecessary. Suggest changing the Maximum Maintenance Interval to either 6 calendar months or semi-annual. 21. Row 2 Column 1, please provide examples of typical communications systems that fit into this category, e.g. Mirror Bit or Guard systems? 22. The words “such as” are used repeatedly. Please clarify what is meant by "such as". Is this left up to the Utility to define in their PSMP? 23. Table 1-5: The Activity for row 1 requires verification that each trip coil is able to operate the device. If a control circuitry contains multiple trip coils, it is not always possible to determine which trip coil energized to trip the device. I recommend changing "each trip coil" to "at least one trip coil". 24. Please clarify what is meant by an "Electromechanical trip" device in row 3. 25. Row 3 column 3, does this mean verify the trip contact on the device operates properly but not verify the trip circuit wiring from this contact to the trip coil since the trip circuit is tested in the row below? It is difficult to separate the meaning in these two rows. 26. Row 4 column 3 requires verification of all paths of the control and trip circuits. Please clarify if this includes the control circuitry of Protection Systems located at the other end of a line if the device utilizes a remote trip scheme?

Response: Response: Thank you for your comments.

1. **Corrective maintenance is included within PRC-005-2 only in that the initiation of resolution of maintenance-correctable issues (discovered during maintenance activities) is included. The SDT considers this inclusion to be appropriate and necessary as part of the maintenance program.**

Organization	Yes or No	Question 5 Comment
2. The example cited would be one countable event. The definition has been modified to clarify. 3. Underfrequency load shedding requirements, whether established by Regional Entities (current practice) or by NERC, are ERO requirements. 4. Clause 4.2.5.5 has been removed. Generator-connected station service transformers are essential to the continuing operation of the generating plant; therefore, protection on these system components is included within PRC-005-2 if the generation plant is a BES facility. 5. Requirement R1, Part 1.2 has been modified essentially as you suggest. 6. "Monitoring attributes" are used within the respective tables; "Component attributes" can include monitoring or not. The Tables have been revised to specify "Maintenance Activities". 7. The SDT has determined that the fundamental concerns of Requirement R1, Part 1.5 and the associated changes are addressed within the PSMP definition, and that Requirement R1, Part 1.5 is not necessary; therefore, it has been removed. Requirement R4 has also been re-drafted to address various related concerns noted within comments. The associated VSL has also been revised. Please see Supplementary Reference Document, Section 8 for a discussion of this. 8. Corrective maintenance is included within PRC-005-2 only in that the initiation of resolution of maintenance-correctable issues (discovered during maintenance activities) is included. The SDT considers this inclusion to be appropriate and necessary as part of the maintenance program. 9. The SDT has determined that the fundamental concerns of Requirement R1, Part 1.5 and the associated changes are addressed within the PSMP definition, and that Requirement R1, Part 1.5 is not necessary; therefore, it has been removed. Requirement R4 has also been re-drafted to address various related concerns noted within comments. The associated VSL has also been revised. Please see Supplementary Reference Document, Section 8 for a discussion of this. 10. Yes. However, the degree to which any single evidence type is sufficient is dependent on the completeness of the evidence itself. The Measure has been modified to clarify this point. The Measure M2 to which you refer has been deleted in conjunction with the deletion of the accompanying requirement. 11. Yes. The SDT has provided examples of the sort of evidence that may serve to demonstrate compliance. The degree to which any single evidence type is sufficient is dependent on the completeness of the evidence itself. "Such as" was not intended to be an all-inclusive list; additional examples are provided in Section 15.7 of the Supplementary Reference Document. The Measure has been modified to clarify this point. 12. Signatures, initials, etc, may not apply to all forms of evidence. "Dated" is more universal. 13. Corrective maintenance is included within PRC-005-2 only in that the initiation of resolution of maintenance-correctable issues (discovered during maintenance activities) is included. The SDT considers this inclusion to be appropriate and necessary as part of the maintenance program. 14. The portion of "Compliance" that referred to the Tables has been deleted. 15. The text to which you refer is part of the standard language for NERC Standards and reflects a general responsibility of the Compliance Enforcement Authority. The Compliance Enforcement Authority does not need to be indentified as an Applicable Entity. 16. If proper operation of an input or output is required such that the Protection System operate properly, it is "essential". "Verify operation …" means		

Organization	Yes or No	Question 5 Comment
		to determine that the component functions properly. The typo has been corrected. **17. The text to which you refer has been deleted in consideration of your comment.** **18. The SDT disagrees; settings beyond those "essential for proper function of the relay" may be essential to proper functioning of the monitoring, etc, which is used to extend the maximum maintenance interval of the relay.** **19. The SDT has arranged the format of each of the cells within the Maintenance Activities column for the best clarity within each individual cell.** **20. The SDT believes that the 3-month interval is proper for unmonitored communications systems.** **21. Examples such as you suggest may violate the NERC Anti-Trust Guidelines by appearing to favor specific proprietary technologies. Some examples may be found in Section 15.5 of the Supplementary Reference Document.** **22. "Such as" refers to examples pertinent to various equipment technologies, and thus are equipment-dependent, as opposed to entity-selectable. Some examples may be found in Section 15.5 of the Supplementary Reference Document.** **23. The SDT believes that each individual trip coil needs to be verified as required within PRC-005-2.** **24. "Electromechanical" refers to any device which has moving parts that respond to electrical signals, such as lockout relays and auxiliary relays. This row in Table 1-5 has been modified.** **25. Yes. The verification of the entire control circuitry is performed according to the following row in the Table, on a less-frequent interval.** **26. The testing of the "remote trip scheme" seems best characterized as testing of a "Communications System". Accordingly, testing of the remote station control circuitry is an independent activity.**
CenterPoint Energy	Yes	(a) CenterPoint Energy cannot support this proposed Standard. Any standard that requires a 35 page Supplementary Reference document and a 37 page FAQ - Practical Compliance and Implementation document, in addition to extensive tables in the Standard, is much too prescriptive and complex to be practically implemented. (b) CenterPoint Energy is opposed to approving a standard that imposes unnecessary burden and reliability risk by imposing an overly prescriptive approach that in many cases would "fix" non-existent problems. To clarify this last point, CenterPoint Energy is not asserting that maintenance problems do not exist. However, requiring all entities to modify their practices to conform to the inflexible approach embodied in this proposal, regardless of how existing practices are working, is not an appropriate solution. Among other things, requiring entities to modify practices that are working well to conform to the rigid requirements proposed herein carries the downside risk that the revised practices, made solely to comply with the rigid requirements, degrade reliability performance. (c) CenterPoint Energy is very concerned that a large increase in the amount of documentation will be required in order to demonstrate compliance - with no resulting reliability benefit. CenterPoint Energy

Organization	Yes or No	Question 5 Comment
		believes this Standard could actually result in decreasing system reliability, as the Standard proposes excessive maintenance requirements. The following is included in the Supplementary Reference document (page 8): "Excessive maintenance can actually decrease the reliability of the component or system. It is not unusual to cause failure of a component by removing it from service and restoring it." System reliability can be even further reduced by the number of transmission line and autotransformer outages required to perform maintenance. (d) The following is included in the FAQ - Practical Compliance and Implementation document: "PRC-005-2 assumes that thorough commission testing was performed prior to a protection system being placed in service. PRC-005-2 requires performance of maintenance activities that are deemed necessary to detect and correct plausible age and service related degradation of components such that a properly built and commission tested Protection System will continue to function as designed over its service life." CenterPoint Energy believes some proposed requirements, such as wire checking a relay panel, do not conform to this statement. CenterPoint Energy's experience has been that panel wiring does not degrade with age and service and that problems with panel wiring, after thorough commissioning, is not a systemic issue.
Response: Response: Thank you for your comments. **a. The SDT has decided to eliminate the FAQ and incorporate topics and discussion from the FAQ within the Supplementary Reference Document.** **b. FERC Order 633 directed that NERC establish maximum maintenance intervals. Additionally, the SDT is directed to develop a measurable, effective continent-wide standard. Entities may continue their current practices as long as those practices meet the minimum requirements of this standard.** **c. FERC Order 633 directed that NERC establish maximum maintenance intervals. The documentation required should not expand dramatically from the documentation currently required to demonstrate compliance. An entity may minimize hands-on maintenance by utilizing monitoring to extend the intervals.** **d. The standard does not require "wire-checking", but instead generically specifies "verification" – however an entity chooses to do so.**		
American Transmission Company	Yes	ATC recognizes the substantial efforts that the SDT has made on PRC-005 and appreciate the SDT's modifications to this Standard based on previous comments made. ATC looks forward to continuing to have a positive influence on this process via the comment process, ballots and interaction with the SDT. ATC was very close to an affirmative vote on this Standard prior to the unanticipated changes that appeared in this most recent posting. These changes introduce a significant negative impact from ATC's perspective. Therefore, ATC is recommending a negative ballot in the hope that our concerns regarding R 1.5 and R 4.2 and other clarifications will be included with the standard The two items within the proposed Standard that we take exception to are not directly related to implementing FERC Order 693. Rather, it is the overly

Organization	Yes or No	Question 5 Comment
		prescriptive nature with respect to the "how" as outlined in the proposed Standard that ATC takes exception... To improve and find the proposed Standard acceptable, ATC would like to see the following modifications: 1. Change the text to require the actuation of a single trip coil (row 1 of table 1.5). This would satisfy the intent to exercise the mechanism on a regular schedule, given that the mechanism binding is a much more likely source of a coil failure. The balance of trip coils could then be tested as part of routine breaker maintenance. 2. Eliminate the additional requirements introduced by the addition of R1.5 and the associated modifications to R4.2. The additional documentation required for the range of each element is typically incorporated into the pass/fail mechanism of the existing test equipment (which is reflective of the manufacturer recommendations) used to conduct these tests. Therefore, requiring the assembly of this additional documentation from each entity would: a. Be duplicative and voluminous as it would require us to track thousands of additional data points due to the variability in element ranges by relay manufacturer, model number and vintage. b. Not add to the reliability of the system as this function is already being performed on a collective basis.
Response: Response: Thank you for your comments. **1. The SDT believes that each individual trip coil needs to be verified as required within PRC-005-2.** **2. The SDT has determined that the fundamental concerns of Requirement R1, Part 1.5 and the associated changes are addressed within the PSMP definition, and that Requirement R1, Part 1.5 is not necessary; therefore, it has been removed. Requirement R4 has also been re-drafted to address various related concerns noted within comments. The associated VSL has also been revised. Please see Supplementary Reference Document, Section 8 for a discussion of this.**		
Consumers Energy	Yes	1. Table 1-3 states, "are received by the protective relays". Does this require that the inputs to each individual relay must be checked, or is it sufficient to verify that acceptable signals are received at the relay panel, etc? 2. Relative to Table 1-5, the activities will likely require that system components be removed from service to complete those activities. If the changes to the BES definition (per the FERC Order) causes system elements such as 138 kV connected distribution transformers to be considered as BES, these components can not be removed from service for maintenance without outaging customers. The standard must exempt these components from the activities of Table 1-5 if the activity would result in deenergizing customers. 3. For the component types addressed in Tables 1-3 and 1-5, the requirements may cause entities to identify components very differently than they are currently doing, and doing so may take several years to complete.

Organization	Yes or No	Question 5 Comment
		The Implementation Plan for R1 and R4 is too aggressive in that it may not permit entities to complete the identification of discrete components and the associated maintenance and implement their program as currently proposed. We propose that the Implementation Plan specifically address the components in Table 1-3 and 1-5 with a minimum of 3 calendar years for R1 and 12 calendar years after that for R4. 4. As for the interval in Table 1-4 regarding the battery terminal connection resistance, we believe that an 18-month interval is excessively frequent for this activity, and suggest that it be moved to the 6-calendar-year interval. 5. In Table 1-4, we currently re-torque all of the battery terminal connections every 4-years, rather than measuring the terminal connection resistance to determine if the connections are sound. Disregarding the interval, would this activity satisfy the "verify the battery terminal connection resistance" activity?
Response: Response: Thank you for your comments. **1. The SDT intends that the voltage and current signals properly reach each individual relay, but there may be several methods of accomplishing this activity.** **2. This concern seems more properly to be one to be addressed during the activities to develop the new BES definition, rather than within PRC-005-2.** **3. The Implementation Plan for Requirement R1 has been modified from 6 months to 12 months. The Standard has also been modified (Requirement R1, Part 1.1) to not specifically require identification of all individual Protection System components. The Implementation Plan for Requirement R4 has been revised to add one year to all established dates.** **4. IEEE 450, 1188, 1106 all recommend this activity at a 12-month interval. Please see Section 15.4.1 of the Supplementary Reference Document for a discussion of this activity.** **5. Re-torqueing the battery terminals would not meet this requirement.**		
Southern Company Generation	Yes	1. Please consider retaining the definitions stated to be moved to the NERC Glossary - they would be valuable to entities in the standard. 2. On Page 5, Section 1.2, please consider changing "or a combination of these maintenance methods (per PRC-005-Attachment A)." to "or a combination of these two maintenance methods." 3. On Page 5, Section 1.5: recommend deleting this section - the subjectivity of what is an acceptable value for component testing makes this requirement un-valuable. 4. On Page 5, Section 4.2, it is recommended that the requirement be the following: Either verify that the component performance is acceptable at the conclusion of the maintenance activities or initiate resolution of any identified maintenance correctable issue.

Organization	Yes or No	Question 5 Comment
		5. On Page 5, Measure M1, replace 1.5 with 1.4 (after eliminating Requirement 1.5) 6. On Page 6, Section 1.3, replace the existing Data Retention text with the following: The TO, GO, and DP shall each retain documentation for the longer of the these time periods: 1) the two most recent performances of each distinct maintenance activity for the Protection System component, or (2) all performances of each distinct maintenance activity for the Protection System component since the previous scheduled audit date. The Compliance Enforcement Authority shall keep the last periodic audit report and all requested and submitted subsequent compliance records. 7. On Page 10, Section F, please correct the revision information for the documents listed. 8. On Pages 14 & 15, Table 1-4, move the bottom row to the next page so that it is easier to see that the maintenance activities are an “either/or” option. 9. On Page 17, Table 1-5, it seems that the 12 calendar year interval activities would automatically be included in the 6 calendar year activity for verifying the electrical operation of electromechanical trip and auxiliary devices. Is the 12 year requirement superfluous? 10. On Page 19, Attachment A, it is recommended to delete the footnote #1 since the definition is given already on Page 2.

Response: Response: Thank you for your comments.

1. **If the terms were placed in the Glossary of Terms, the SDT is concerned that some future SDT, in order to utilize these terms, may change them in a fashion inconsistent with the intended usage within PRC-005-2.**
2. **Requirement R1, Part 1.2 has been modified.**
3. **The SDT has determined that the fundamental concerns of Requirement R1, Part 1.5 and the associated changes are addressed within the PSMP definition, and that Requirement R1, Part 1.5 is not necessary; therefore, it has been removed. Requirement R4 has also been re-drafted to address various related concerns noted within comments. The associated VSL has also been revised. Please see Supplementary Reference Document, Section 8 for a discussion of this.**
4. **The SDT has determined that the fundamental concerns of Requirement R1, Part 1.5 and the associated changes are addressed within the PSMP definition, and that Requirement R1, Part 1.5 is not necessary; therefore, it has been removed. Requirement R4 has also been re-drafted to address various related concerns noted within comments. The associated VSL has also been revised. Please see Supplementary Reference Document, Section 8 for a discussion of this.**
5. **Measure M1 has been modified as you suggest.**
6. **The Data Retention section has been modified essentially as you suggest.**

Organization	Yes or No	Question 5 Comment
7. The Reference information has been corrected. **8. Table 1-4 has been revised.** **9. The 12-year interval activities are more extensive than the 6-year interval activities.** **10. Footnote #1 has been removed.**		
US Bureau of Reclamation	Yes	1. The concept of including definitions in this standard that are not a part of the Glossary of Terms will create a conflict with other standards that choose to use the term with a different meaning. This practice should be disallowed. If a definition is be introduced it should be added to the Glossary of Terms. This concept was not provided to industry for comment when the modifications to the Definition of Protection System were introduced. Additional related to this practice are included later on. 2. The Term "Protective Relays" is overly broad as it is not limited to those devices which are used to protect the BES. In the reference provided to the standard, the SDT defined "Protective Relays" as "These relays are defined as the devices that receive the input signal from the current and voltage sensing devices and are used to isolate a faulted portion of the BES. " The Definition for "Protective Relays" as well as the components associated with the them should be associated with the protection of the BES in the definition. 3. The Section 2.4 of the attached reference and the recent FERC NOPR are in conflict with the definition of "Protective Relays" which include lockout relays and transfer trip relays "The relays to which this standard applies are those relays that use measurements of voltage, current, frequency and/or phase angle and provide a trip output to trip coils, dc control circuitry or associated communications equipment. 4. This Draft 2: April3: November 17, 2010 Page 5 definition extends to IEEE device # 86 (lockout relay) and IEEE device # 94 (tripping or trip-free relay) as these devices are tripping relays that respond to the trip signal of the protective relay that processed the signals from the current and voltage sensing devices." The definition should be revised to reflect that is really intended. The SDT as created an implied definition by specifically defining DC circuits associated with the trip function of a "Protective Relay" but failing to specifically define voltage and current sensing circuits providing inputs to "Protective Relays". The team clearly intended the circuits to be included but the definition does not since it only refers the "voltage and current sensing devices". 5. Starting with the Definitions and continuing through the end of the document, terms that have been defined are not capitalized. This leaves it ambiguous as to whether the defined term is to be applied or it is a generic reference. Only defined terms "Protection System Maintenance Program" and "Protection System" are consistently capitalized. 6. Protection System Maintenance Program (PSMP) definition: The Restore bullet should be revised to read

Organization	Yes or No	Question 5 Comment
		as follows: "Return malfunctioning components to proper operation by repair or calibration during performance of the initial on-site activity."Add the following at the end of the PSMP definition: "NOTE: Repair or replacement of malfunctioning Components that require follow-up action fall outside of the PSMP, and are considered Maintenance Correctable Issues." 7. Protection System (modification) definition: The term "protective functions" that is used herein should be changed to "protective relay functions" or what is meant by the phrase should become a defined term, as it is being used as if it is a well known well defined, and agreed upon term. The first bullet text should be revised to read as follows: "Protective relays that monitor BES electrical quantities and respond when those quantities exceed established parameters," the last two bullets should be reversed in order and modified to read as follows: o control circuitry associated with protective relay functions through the trip coil(s) of the circuit breakers or other interrupting devices, and o station dc supply (including station batteries, battery chargers, and non-battery-based dc supply) associated with the preceding four bullets. 8. Statement between the Protection System (modification) definition and the Maintenance Correctable Issue definition; Is this a NERC accepted practice? There does not appear to be a location in the standard for defining terms. Having terms that are not contained in the "Glossary of Terms used in NERC Reliability Standards," and are outside of the terms of the standards, and yet are necessary to understand the terms of the Requirements is not acceptable. They would become similar to the reference documents, and could be changed without notice. 9. Maintenance Correctable Issue definition: The last sentence should be modified to read as follows: "Therefore this issue requires follow-up corrective action which is outside the scope of the Protection System Maintenance Program and the Standard PRC-005-2 defined Maximum Maintenance Intervals." The definition could also be easily clarified to read "Maintenance Correctable Issue - Failure of a component to operate within design parameters such that it cannot be restored to functional order by repair or calibration; therefore requires replacement." This ensures that any action to restore the equipment, short of replacement, is still considered maintenance. Otherwise ambiguity is introduced as what "maintenance" is. 10. Countable Event definition: An explanation should be made that this is a part of the technical justification for the ongoing use of a performance-based Protection System Maintenance Program for PRC-005. 11. Insert the phrase "Standard PRC-005-2" before the term "Tables 1-1..." 12. Applicability: 4.2. Facilities: 4.2.5.4 and 4.2.5.5: Delete these two parts of the applicability. Station service transformer protection systems are not designed to provide protection for the BES. Per PRC-005-2 Protection System Maintenance Draft Supplementary Reference, Nov. 17 2010, Section 2.3 - Applicability of New Protection System Maintenance Standards: "The BES purpose is to transfer bulk power. The applicability language has been changed from the original PRC-005: "...affecting the reliability of the Bulk

Organization	Yes or No	Question 5 Comment
		Electric System (BES)..."To the present language:"... and that are applied on, or are designed to provide protection for the BES."The drafting team intends that this Standard will not apply to "merely possible" parallel paths, (sub-transmission and distribution circuits), but rather the standard applies to any Protection System that is designed to detect a fault on the BES and take action in response to that fault."Station Service transformer protection is designed to detect a fault on equipment internal to a power plant and not directly related to the BES. In addition, many Station Service protection ensures fail over to a second source in case of a problem. Thus station service transformer protection system is a power plant reliability issue and not a BES reliability issue. As such station service transformer protection should not be included in PRC 005 2.In addition; the SDT appears to have targeted generation station service without regard to transmission systems. If generating station service transformers are that important, then why are substation/switchyard station service transformers not also important? 13. B. Requirements Should the sub requirements have the "R" prefix? 14. R4.Change the phrase "... PSMP, including identification of the resolution of all ..." to read "...PSMP including identification, but not the resolution, of all ...". 15. General comment PRC005-2 is very specific in listing the maximum maintenance interval but is still very vague in listing the specific components to test. Suggest adding the following to the standard. a. A sample list of devices or systems that must be verified in a generator to meet the requirements of this Maintenance Standard: b. Examples of typical devices and relay systems that respond to electrical quantities and may directly trip the generator, or trip through a lockout relay may include but are not necessarily limited to: Fault protective functions, including distance functions, voltage-restrained overcurrent functions, or voltage-controlled overcurrent functions Loss-of-field relays Volts-per-hertz relays Negative sequence overcurrent relays Over voltage and under voltage protection relays Stator-ground relays Communications-based protection systems such as transfer-trip systems Generator differential relays

Organization	Yes or No	Question 5 Comment
		Reverse power relays Frequency relays Out-of-step relays Inadvertent energization protection Breaker failure protection o lockout or tripping relays c. For generator step up transformers, operation of any the following associated protective relays frequently would result in a trip of the generating unit and, as such, would be included in the program: Transformer differential relays o Neutral overcurrent relay Phase overcurrent relays 16. In the Lower, Moderate and Severe VSL descriptions, in addition to not being capitalized, the defined term Maintenance Correctable Issues should not be hyphenated. 17. In Attachment A Section 2 Page 51 should be modified as follows: 2. Maintain the components in each segment according to the time-based maximum allowable intervals established in Tables 1-1 through 1-5 until results of maintenance activities for the segment are available for a minimum of either 30 individual components of the segment or a significant statistical population of the individual components of a segment." Without the modification the requirement unfairly target smaller entities. This will allow smaller entities to determine adjust its time based intervals if its experience with an appropriate number of components supports it. In Attachment A Section 5 Page 51 should be modified as follows: 5. Determine the maximum allowable maintenance interval for each segment such that the segment experiences countable events on no more than 4% of the components within the segment, for the greater of either the last 30 components maintained or a significant statistical population of the individual components of a segment maintained in the previous year. Without the modification the requirement unfairly target smaller entities. This will allow smaller entities to determine adjust its time based intervals if its experience with an appropriate number components supports it. 18. In Attachment A Section 5 Page 52 should be modified as follows: 5. Using the prior year's data, determine the maximum allowable maintenance interval for each segment such that the segment experiences countable events on no more than 4% of the components within the segment, for the greater of either the last 30 components maintained or a significant statistical population

Organization	Yes or No	Question 5 Comment
		of the individual components of a segment components maintained in the previous year. Without the modification the requirement unfairly target smaller entities. This will allow smaller entities to determine adjust its time based intervals if its experience with an appropriate number of components supports it.

Response: Thank you for your comments.

1. **If the terms were placed in the Glossary of Terms, the SDT is concerned that some future SDT, in order to utilize these terms, may change them in a fashion inconsistent with the intended usage within PRC-005-2.**
2. **"Protective relay" is defined by IEEE, and the SDT sees no need to either change the definition or to repeat the definition within PRC-005. Further, the applicability of generically-described protective relays is defined by the Applicability clause of PRC-005-2.**
3. **The issues raised by the FERC NOPR will be addressed as part of the response to the NOPR (and ultimately the Order). The extension to auxiliary and lockout relays is not part of the protective relay (addressed within Table 1-1), but instead as part of the control circuitry (Table 1-5).**
4. **The extension to auxiliary and lockout relays is not part of the protective relay (addressed within Table 1-1), but instead as part of the control circuitry (Table 1-5).**
5. **Definitions from the NERC Glossary of Terms (or those intended for the Glossary) are consistently capitalized (Protection System and Protection System Maintenance Program fall within this category). As for terms defined only for use within this standard, these terms are NOT capitalized, since they are not in the Glossary of Terms.**
6. **The "restore" portion of PSMP specifically addresses returning malfunctioning components to proper operation. The requirements regarding maintenance correctable issues are further addressed within that definition (for use only within PRC-005-2).**
7. **The SDT is currently not planning on further modifying the most recent NERC BOT-approved definition of Protection System.**
8. **If the terms were placed in the Glossary of Terms, the SDT is concerned that some future SDT, in order to utilize these terms, may change them in a fashion inconsistent with the intended usage within PRC-005-2.**
9. **Identifying problems, but not fixing them, does not constitute an effective program. In deference to the time that may be necessary to repair/replace defective components, the SDT has decided to require only initiation of resolution of maintenance correctable issues, not to demonstrate completion of them.**
10. **Since this term is used only in Attachment A, it seems unnecessary to provide the explanation requested.**
11. **The SDT has elected not to change the reference to the Tables throughout the standard.**
12. **Applicability 4.2.5.5 has been removed. Generator-connected station service transformers (4.2.5.4) are essential to the continuing operation of the generating plant; therefore, protection on these system components is included within PRC-005-2 if the generation plant is a BES facility.**
13. **The current style guide for NERC Standards does not preface the subparts with an "R".**
14. **Identifying problems, but not fixing them, does not constitute an effective program. In deference to the time that may be necessary to**

Organization	Yes or No	Question 5 Comment
		repair/replace defective components, the SDT has decided to require only initiation of resolution of maintenance correctable issues, not to demonstrate completion of them. **15. The various specific components you suggest are addressed within the Facilities portion of the Applicability 4.2.5, as well as other components that satisfy the attributes within 4.2.5. These examples are in the Supplementary Reference Document (Section 8.1.3).** **16. Within the VSLs, the hyphenated term has been corrected.** **17. The SDT has determined that 30 individual components is the minimum acceptable statistically-significant population for use to establish performance-based intervals. Multiple entities may aggregate component populations to establish this component population, provided that the programs are sufficiently similar to make the aggregation valid. See Supplementary Reference Document Section 9 for a discussion.** **18. The SDT has determined that 30 individual components is the minimum acceptable statistically-significant population for use to establish performance-based intervals. Multiple entities may aggregate component populations to establish this component population, provided that the programs are sufficiently similar to make the aggregation valid. See Supplementary Reference Document Section 9 for a discussion.**
Alliant Energy	Yes	1. In the Purpose statement delete “affecting” and replace it with “protecting”. The purpose of the standard deals with systems that protect the BES. 2. In sections R1 and R4.2.1 delete “applied on” as unneeded and potentially confusing. The goal is to cover Protection Systems designed to protect the BES. 3. Alliant Energy believes that Article 1.4 needs to be deleted from the standard. It is redundant and serves no purpose. 4. Alliant Energy believes that Article 1.5 needs to be deleted from the standard. There is a major concern on what an “acceptable parameter” is and how it would be interpreted by the Regional Entities. 5. Section 4.2 Applicable Facilities: We are concerned with this paragraph being interpreted differently by the various regions and thereby causing a large increase in scope for Distribution Provider protection systems beyond the reach of UFLS or UVLS.4.2.1 Protection Systems applied on, or designed to provide protection for, the BES. The description is vague and open for different interpretations for what is “applied on” or “designed to provide protection”. According to the November 17, 2010 Draft Supplementary Reference page 4, the Standard will not apply to sub-transmission and distribution circuits, but will apply to any Protection System that is designed to detect a fault on the BES and take action in response to the fault. The Standard Drafting Team does not feel that Protection Systems designed to protect distribution substation equipment are included in the scope of this standard; however, this will be impacted by the Regional Entity interpretations of ‘protecting” the BES. Most distribution protection systems will not react to a fault on the BES, but are caught up in the interpretation due to tripping a breaker(s) on the BES. We request clarification that the examples listed below do not constitute components of a BES Protection

Organization	Yes or No	Question 5 Comment
		System: 1. Older distribution substations that lack a transformer high side interrupting device and therefore trip a transmission breaker or a portion of the transmission system or bus, or 2. Newer distribution substations that contain a transformer high side interrupting device but also incorporate breaker failure protection that will trip a transmission breaker or a portion of the transmission system or bus. 6. Since distribution provider systems are typically radial and do not contain the level of redundancy of transmission or generation protection systems, it is not cheap, safe, maintaining BES reliability, or easy to coordinate companies to test these protection systems to the level of PRC-005-2 draft recommendations. 7. Section F Supplementary Reference Documents: The references listed in this section refer to 2009 dates and do not match with the 2010 reference documents supplied for comment. 8. Table 1-4 Component Type Station dc Supply: a. "Any dc supply for a UFLS or UVLS system" - This should not have the same testing interval as control circuits, but should have a maximum maintenance period as other dc supplies do. b. Replace the words "perform as designed" on page 14 of Table 1-4 with "operate within defined tolerances."Table 1-5 Component Type Control Circuitry: c. This table allows for unmonitored trip coils for UFLS or UVLS breakers to have "no periodic maintenance". The PRC-005-2 Supplementary Frequently Asked Question #7B and #7C give excellent reasoning for not requiring maintenance on the trip coil component due to the larger number of failures that would be required to have any substantial impact to the BES as well as the statement that distribution breakers are operated often on just fault clearing duty already. We believe that the unmonitored control circuitry has the same level of minimal BES impact and is also being tested each time the distribution breaker undergoes fault clearing duty. With this logic, we do not see why there would be different maintenance requirements for these two components. d. Alliant Energy is concerned that the addition of mandatory 86 and 94 auxiliary lockout relays (Electromechanical trip or Auxiliary devices) will force entire bus outages that will compromise the BES reliability more by forcing utilities across the US to unnecessarily take multiple non-faulted BES elements out of service. Such testing is also likely to introduce human error that will cause outages such as items outlined in the NERC lessons learned" and therefore such testing will result in more outages than actual failures. An equivalent non-destructive test needs to be identified to allow entities to sufficiently trace and test trip paths without taking multiple substation line outages to physically test a lockout or breaker failure scheme.

Organization	Yes or No	Question 5 Comment
Response: Thank you for your comments. **1. The "Purpose" is defined by the SAR.** **2. Requirement R1 and Requirement R4, Part 4.2.1 have been modified as you suggested.** **3. The SDT instead elected to remove Requirement R2.** **4. The SDT has determined that the fundamental concerns of Requirement R1, Part 1.5 and the associated changes are addressed within the PSMP definition, and that Requirement R1, Part 1.5 is not necessary; therefore, it has been removed. Requirement R4 has also been re-drafted to address various related concerns noted within comments. The associated VSL has also been revised. Please see Supplementary Reference Document, Section 8 for a discussion of this.** **5. Applicability 4.2.1 has been revised to remove 'applied on". The SDT believes that this addresses your concern. Applicability 4.2.2 and 4.2.3, respectively, address UFLS and UVLS specifically, and are not related to 4.2.1. The Supplementary Reference Document has been revised to clarify. PRC-005-2 would appear to apply to both cited examples.** **6. This is properly a concern to be addressed within the current SDT that is developing a revised definition of Bulk Electric System.** **7. The date in Clause F of the standard related to the Supplementary Reference Document has been revised.** **8. a. The SDT disagrees. Station dc supply for UFLS/UFLS only is limited in its impact, and the SDT believes that using the same intervals as for the related control circuits.** **b. "Tolerances" does not fully describe the parameters for maintenance of station dc supply; "perform as designed" is far more inclusive.** **c. The SDT intends that tripping of the interrupting device for UFLS/UVLS is not required, but that the other portions of the dc control circuitry still shall be maintained. See Section 15.3 of the Supplementary Reference Document.** **d. The SDT believes that mechanical solenoid-operated devices share performance attributes (and failure modes) with electromechanical relays and need to be tested at similar intervals. Performance-Based maintenance is an option to increase the intervals if the performance of these devices supports those intervals**		
LCRA Transmission Services Corporation	No	
MidAmerican Energy	Yes	1. MidAmerican remains concerned that including requirements for testing of electromechanical trip or auxiliary devices (Table 1-5 Row 3) will in some cases require entire bus outages that will compromise the BES reliability due to the need for entities across the US to take multiple BES elements out of service during the testing. If this requirement is retained additional time should be included in the implementation plan to allow for system modifications, such as the installation of relay test switches, to potentially allow

Organization	Yes or No	Question 5 Comment
		for this testing while minimizing testing outages. 2. Clarify that in the definition of Component Type that Transmission Owners are allowed the latitude to designate their own definitions for each of the Component Types, not just control circuits. 3. In the implementation schedule time periods are provided within which compliance deadlines and percentages of compliance are given. The following clarifications are recommended: 1. In calculating percentage of compliance for purposes of demonstrating progress on the implementation plan the percentages are calculated based on the total population of the protection system components that an entity has that fit the component category and allowable interval. 2. To obtain compliance with the percentage completion requirements of the implementation schedule an entity needs to have completed at least one prescribed maintenance activity of that component type and interval. 4. In the purpose statement delete “affecting” and replace it with “protecting”. The purpose of the standard deals with systems that protect the BES. 5. In sections R1 and R4.2.1 delete “applied on or” as unneeded and potentially confusing. The goal is to cover protection systems designed to protect. 6. Clarify the meaning of “state of charge” on page 14 in Table 1-4. 7. In Table 1-4 Component Type Station dc Supply, “Any dc supply for a UFLS or UVLS system” should have the same maximum maintenance period as other dc supplies. 8. Table 1-5 Component Type Control Circuitry, the table allows for unmonitored trip coils for UFLS or UVLS breakers to have “no periodic maintenance”. The PRC-005-2 Supplementary Frequently Asked Question #7B and #7C give excellent reasoning for not requiring maintenance on the trip coil component due to the larger number of failures that would be required to have any substantial impact to the BES as well as the statement that distribution breakers are operated often on just fault clearing duty already. We believe that the unmonitored control circuitry has the same level of minimal BES impact and is also being tested each time the distribution breaker undergoes fault clearing duty. With this logic, we do not see why there would be different maintenance requirements for these two components.
Response: Thank you for your comments. **1. The SDT believes that mechanical solenoid-operated devices share performance attributes (and failure modes) with electromechanical relays and need to be tested at similar intervals. Performance-Based maintenance is an option to increase the intervals if the performance of these devices supports those intervals.**		

Organization	Yes or No	Question 5 Comment
2. For components other than control circuitry, the SDT believes that identification of the components as established within the draft Standard is appropriate. There is no latitude regarding component types. **3. The SDT believes that the Implementation Plan clearly agrees with your interpretation, and no clarification seems necessary.** **4. The "Purpose" is defined by the SAR.** **5. Requirement R1 and Requirement R4, Part 4.2.1 have been modified as you suggested.** **6. Table 1-4 has been revised to remove "state of charge" from the activities.** **7. The SDT disagrees. Station dc supply for UFLS/UVLS only is limited in its impact, and the SDT believes that using the same intervals as for the related control circuits is appropriate.** **8. For the control circuitry of UFLS/UVLS, the relatively frequent breaker operations may not be reflective of proper functioning for UFLS/UVLS function. Therefore, minimal maintenance activities are necessary for these cases.**		
Ameren	Yes	(1) We believe that R1.5 and R4.2 "Calibration tolerances or other equivalent parameters" requirements should be removed. Neither the Supplement nor the FAQ address the expectation for them. While we agree that tolerances are needed and used, they need not be specified as part of this standard. (2) The Data retention is too onerous (a) For those components with numerous cycles between on-site audits, retaining and providing evidence of the two most recent distinct maintenance performances and the date of the others should be sufficient. Additionally, we are subject to self-certification, spot audits and/or inquiries at any time between on-site audits as well. (b) For those components with cycles exceeding on-site audit interval, retaining and providing evidence of the most recent distinct maintenance performance and the date of the preceding one should be sufficient. Auditors will have reviewed the preceding maintenance record. Retaining these additional records consumes resources with no reliability gain. (3) Definition of the BES perimeter should be included in accordance with Project 2009-17 Interpretation. (a)Facilities Section 4.2.1 "or designed to provide protection for the BES" needs to be clarified so that it incorporates the latest Project 2009-17 interpretation. The industry has deliberated and reached a conclusion that provides a meaningful and appropriate border for the transmission Protection System; this needs to be acknowledged in PRC-005-2 and carried forward. (4)System-connected station service transformers (4.2.5.5) should be omitted, because (a) Generating Plant system-connected Station Service transformers should not be included as a Facility because they are serving load. Omit 4.2.5.5 from the standard. There is no difference between a station service transformer and a transformer serving load on the distribution system. This has no impact on the BES, which is defined as the system greater than 100 kV. (b) system-connected station service transformers in the same table as well as from table-to-table can be overwhelming. This would help keep Regional Entities and System Owners from

Organization	Yes or No	Question 5 Comment
		making errors. (5) Retention of maintenance records for replaced equipment should be omitted. FAQ II 2B final sentence states that documentation for replaced equipment must be retained to prove the interval of its maintenance. We disagree with this because the replaced equipment is gone and has no impact on BES reliability; and such retention clutters the data base and could cause confusion. For example, it could result in saving lead acid battery load test data beyond the life of its replacement. (6) Battery inspection every 4 months is sufficient. IEEE battery maintenance standards call for quarterly inspections. These are targets, though, not maximums. An entity wishing to avoid non-compliance for an interval that might extend past three calendar months due to storms and outages must set a target interval of two months thereby increasing the number of inspections each year by half again. This is unnecessarily frequent. We suggest changing the maximum interval for battery inspections to 4 calendar months. For consistency, we also suggest that all intervals expressed as 3 calendar months be changed to 4 calendar months. (7) PSMP Implement Date should commence at the beginning of a Calendar year. This is the most practical way to transition assets from our existing PRC-005-1 plans. (8) Please clarify the meaning of “state of charge” for batteries. Does this mean specific gravity testing or what? (9) Please clarify that instrument transformer itself is excluded. Please clarify that the instrument transformer itself is excluded. The standard indicates that only voltage and current signals need to be verified in Table 1-3, but the recently approved Protection System definition wording can be mis-interpreted to mean they are included. FAQ 11.3.A is helpful.

Response: Thank you for your comments.

1. **The SDT has determined that the fundamental concerns of Requirement R1, Part 1.5 and the associated changes are addressed within the PSMP definition, and that Requirement R1, Part 1.5 is not necessary; therefore, it has been removed. Requirement R4 has also been re-drafted to address various related concerns noted within comments. The associated VSL has also been revised. Please see Supplementary Reference Document, Section 8 for a discussion of this.**
2. **In order that a Compliance Monitor can be assured of compliance, the SDT believes that the Compliance Monitor will need the data of the most recent performance of the maintenance, as well as the data of the preceding one to validate that entities have been in compliance since the last audit (or currently, since the beginning of mandatory compliance). The SDT has specified the data retention in the posted standard to establish this level of documentation. This seems to be consistent with the current practices of several Regional Entities.**
3. **When the interpretation (Project 2009-17) is approved, the SDT for PRC-005-2 will consider if the interpretation is appropriate for PRC-005-2 and**

Organization	Yes or No	Question 5 Comment
make associated changes. **4. In response to many comments, including yours, the SDT has removed 4.2.5.5 from the Applicability of the standard.** **5. The SDT has decided to eliminate the FAQ and incorporate topics and discussion from the FAQ within the Supplementary Reference Document. Your comments will be considered within that activity. The SDT believes that entities should retain the evidence necessary to demonstrate compliance for the entire period reflected within Data Retention, and the discussion within the Supplementary Reference Document suggests that this includes records of retired equipment.** **6. The SDT believes that the 3-month interval specified in the Standard is appropriate.** **7. The guidance provided to the SDT provides that the implementation dates should begin on the first day of a calendar quarter.** **8. Table 1-4 has been revised to remove "state of charge" from the activities.** **9. The SDT intends that the instrument transformer and associated circuitry be verified to be functional, but believes that customary apparatus maintenance (dielectric, infrared, etc) are not relevant to PRC-005-2. The SDT has decided to eliminate the FAQ and incorporate topics and discussion from the FAQ within the Supplementary Reference Document.**		
Xcel Energy	Yes	1. Requirement R1.4 in part requires that the entity's PSMP includes all monitoring attributes to include those specified in Tables 1-1 through 1-5. Requirement R2 requires that entities that use maintenance intervals for monitored Protection Systems shall verify those components possess the monitoring attributes identified in Tables 1-1 through 1-5. The intent and differences between these 2 requirements is unclear. If an entity does not choose to use monitored intervals, it makes no sense to require them to include the monitoring attributes identified in Tables 1-1 through 1-5 within their PSMP. Furthermore if an entity fails to meet requirement R1.4 for including identified monitoring attributes in its program, it will by default also have violated R2. There seems the possibility of double jeopardy between R1.4 and R2. The intent of R2 is fairly obvious but the intent of including monitoring attributes in R1.4 is not evident. Please provide a discussion within the FAQ to better explain the differences between these two requirements as they relate to monitoring attributes. 2. As written, requirement R1.5 and application of R1.5 acceptance criteria via requirement R4.2 would open entities up to vague interpretations by compliance personnel as to what constitutes adequate acceptance criteria – particularly in the area of subjective inspection results – e.g., battery cell visual inspections. We recommend that R1.5 be re-stated to clarify that acceptance criteria need only be provided for numerically measurable parameters. FAQs should be written to better explain the intent of R1.5 and to provide examples of acceptance criteria and to hopefully drive consistency amongst compliance personnel interpretation of acceptance criteria requirements. Consideration should be given to identifying which maintenance requirements in the Tables would generate quantifiable and measurable test results for which acceptance

Organization	Yes or No	Question 5 Comment
		criteria would be expected.

Response: Thank you for your comments.

1. **The SDT had concluded that Requirement R2 is redundant with Requirement R1, Part 1.4, and has deleted R2 (together with the associated Measure and VSL).**
2. **The SDT has determined that the fundamental concerns of Requirement R1, Part 1.5 and the associated changes are addressed within the PSMP definition, and that Requirement R1, Part 1.5 is not necessary; therefore, it has been removed. Requirement R4 has also been re-drafted to address various related concerns noted within comments. The associated VSL has also been revised. Please see Supplementary Reference Document, Section 8 for a discussion of this.**

END OF REPORT

Standard Development Roadmap

This section is maintained by the drafting team during the development of the standard and will be removed when the standard becomes effective.

Development Steps Completed:

1. Standards Committee approves SAR for posting on June 5, 2007.
2. The SAR was posted for comment from June 11, 2007–July 10, 2007.
3. The SC approves development of the standard on August 13, 2007.
4. First posting of revised standard on July 24, 2009.
5. Second posting of revised standard on June 11, 2010
6. Third posting of revised standard on November 17, 2010

Description of Current Draft:
This is the fourth draft of the Standard. This standard merges previous standards PRC-005-1, PRC-008-0, PRC-011-0, and PRC-017-0. It also addresses FERC comments from Order 693, and addresses observations from the NERC System Protection and Control Task Force, as presented in *NERC SPCTF Assessment of Standards: PRC-005-1 — Transmission and Generation Protection System Maintenance and Testing, PRC-008-0 — Underfrequency Load Shedding Equipment Maintenance Programs, PRC-011-0 — UVLS System Maintenance and Testing, PRC-017-0 — Special Protection System Maintenance and Testing.*

Future Development Plan:

Anticipated Actions	Anticipated Date
1. Post for combined 30-day comment and ballot.	April 8-May 7, 2011
2. Conduct successive ballot	April 28-May 7, 2011
3. Drafting Team Responds to Comments	May 11-June 11, 2011

Definitions of Terms Used in Standard

This section includes all newly defined or revised terms used in the proposed standard. Terms already defined in the Reliability Standards Glossary of Terms are not repeated here. New or revised definitions listed below become approved when the proposed standard is approved. When the standard becomes effective, these defined terms will be removed from the individual standard and added to the Glossary.

Protection System Maintenance Program (PSMP) — An ongoing program by which Protection System components are kept in working order and proper operation of malfunctioning components is restored. A maintenance program for a specific component includes one or more of the following activities:

- Verify — Determine that the component is functioning correctly.
- Monitor — Observe the routine in-service operation of the component.
- Test — Apply signals to a component to observe functional performance or output behavior, or to diagnose problems.
- Inspect — Detect visible signs of component failure, reduced performance and degradation.
- Calibrate — Adjust the operating threshold or measurement accuracy of a measuring element to meet the intended performance requirement.
- Restore – Return malfunctioning components to proper operation.

Protection System (NERC Board of Trustees Approved Definition)

- Protective relays which respond to electrical quantities,
- communications systems necessary for correct operation of protective functions,
- voltage and current sensing devices providing inputs to protective relays,
- station dc supply associated with protective functions (including station batteries, battery chargers, and non-battery-based dc supply), and
- control circuitry associated with protective functions through the trip coil(s) of the circuit breakers or other interrupting devices.

The following terms are defined for use only within PRC-005-2, and should remain with the standard upon approval rather than being moved to the Glossary of Terms.

Maintenance Correctable Issue – Failure of a component to operate within design parameters such that it cannot be restored to functional order by repair or calibration during performance of the initial on-site activity. Therefore this issue requires follow-up corrective action.

Segment – Protection Systems or components of a consistent design standard, or a particular model or type from a single manufacturer that typically share other common elements. Consistent performance is expected across the entire population of a segment. A segment must contain at least sixty (60) individual components.

Component Type - Any one of the five specific elements of the Protection System definition.

Component – A component is any individual discrete piece of equipment included in a Protection System, including but not limited to a protective relay or current sensing device. The designation of what constitutes a control circuit component is very dependent upon how an entity performs and tracks the testing of the control circuitry. Some entities test their control circuits on a breaker basis whereas others

test their circuitry on a local zone of protection basis. Thus, entities are allowed the latitude to designate their own definitions of control circuit components. Another example of where the entity has some discretion on determining what constitutes a single component is the voltage and current sensing devices, where the entity may choose either to designate a full three-phase set of such devices or a single device as a single component.

Countable Event – A component which has failed and requires repair or replacement, any condition discovered during the verification activities in Tables 1-1 through 1-5 which requires corrective action, or a Misoperation attributed to hardware failure or calibration failure. Misoperations due to product design errors, software errors, relay settings different from specified settings, Protection System component configuration errors, or Protection System application errors are not included in Countable Events.

A. Introduction

1. Title: **Protection System Maintenance**

2. Number: PRC-005-2

3. Purpose: To ensure all transmission and generation Protection Systems affecting the reliability of the Bulk Electric System (BES) are maintained.

4. Applicability:

4.1. Functional Entities:

4.1.1 Transmission Owners

4.1.2 Generator Owners

4.1.3 Distribution Providers

4.2. Facilities:

4.2.1 Protection Systems designed to provide protection for BES Element(s).

4.2.2 Protection Systems used for underfrequency load-shedding systems installed per ERO underfrequency load-shedding requirements.

4.2.3 Protection Systems used for undervoltage load-shedding systems installed to prevent system voltage collapse or voltage instability for BES reliability.

4.2.4 Protection Systems installed as a Special Protection System (SPS) for BES reliability.

4.2.5 Protection Systems for generator Facilities that are part of the BES, including:

4.2.5.1 Protection Systems that act to trip the generator either directly or via generator lockout or auxiliary tripping relays.

4.2.5.2 Protection Systems for generator step-up transformers for generators that are part of the BES.

4.2.5.3 Protection Systems for transformers connecting aggregated generation, where the aggregated generation is part of the BES (e.g., transformers connecting facilities such as wind-farms to the BES).

4.2.5.4 Protection Systems for generator-connected station service transformers for generators that are part of the BES.

5. (Proposed) Effective Date: See Implementation Plan

B. Requirements

R1. Each Transmission Owner, Generator Owner, and Distribution Provider shall establish a Protection System Maintenance Program (PSMP) for its Protection Systems designed to provide protection for BES Element(s). *[Violation Risk Factor: Medium] [Time Horizon: Long Term Planning]*

The PSMP shall:

1.1. Address all Protection System **component types.**

1.2. Identify which maintenance method (time-based, performance-based (per PRC-005 Attachment A), or a

Component Type *- Any one of the five specific elements of the Protection System definition.*

combination) is used to address each Protection System component type. All batteries associated with the station dc supply component type of a Protection System shall be included in a time-based program as described in Table 1-4.

1.3. Identify the associated maintenance intervals for time-based programs, to be no less frequent than the intervals established in Table 1-1 through 1-5 and Table 2.

1.4. Include all applicable monitoring attributes and related maintenance activities applied to each Protection System component type consistent with the maintenance intervals specified in Tables 1-1 through 1-5 and Table 2.

Maintenance Correctable Issue - *Failure of a component to operate within design parameters such that it cannot be restored to functional order by repair or calibration during performance of the initial on-site activity. Therefore this issue requires follow-up corrective action.*

R2. Each Transmission Owner, Generator Owner, and Distribution Provider that uses performance-based maintenance intervals in its PSMP shall follow the procedure established in PRC-005 Attachment A to establish and maintain its performance-based intervals. *[Violation Risk Factor: Medium] [Time Horizon: Operations Planning]*

R3. Each Transmission Owner, Generator Owner, and Distribution Provider shall implement and follow its PSMP and initiate resolution of any identified **maintenance correctable issues**.
[Violation Risk Factor: High] [Time Horizon: Operations Planning]

C. Measures

M1. Each Transmission Owner, Generator Owner and Distribution Provider shall have a current or updated documented Protection System Maintenance Program that addresses all component types of its Protection Systems, as required by Requirement R1. For each Protection System component type, the documentation shall include the type of maintenance program applied (time-based, performance-based, or a combination of these maintenance methods), maintenance activities, maintenance intervals, and, for component types that use monitoring to extend the intervals, the appropriate monitoring attributes as specified in Requirement R1, Parts 1.1 through 1.4.

M2. Each Transmission Owner, Generator Owner, and Distribution Provider that uses a performance-based maintenance program shall have evidence that its current performance-based maintenance program is in accordance with Requirement R2, which may include but is not limited to equipment lists, dated maintenance records, and dated analysis records and results.

M3. Each Transmission Owner, Generator Owner, and Distribution Provider shall have evidence that it has implemented the Protection System Maintenance Program and initiated resolution of identified Maintenance Correctable Issues in accordance with Requirement R3, which may include but is not limited to dated maintenance records, dated maintenance summaries, dated check-off lists, dated inspection records, or dated work orders.

D. Compliance

1. Compliance Monitoring Process

1.1. Compliance Monitoring Responsibility

Regional Entity

1.2. Compliance Monitoring and Enforcement Processes:

Compliance Audits

Self-Certifications

Spot Checking

Compliance Violation Investigations

Self-Reporting

Complaints

1.3. Data Retention

The Transmission Owner, Generator Owner, and Distribution Provider shall each keep data or evidence to demonstrate compliance as identified below unless directed by its Compliance Enforcement Authority to retain specific evidence for a longer period of time as part of an investigation.

For Requirement R1, the Transmission Owner, Generator Owner, and Distribution Provider shall each keep its current dated Protection System Maintenance Program including the documentation that specifies the type of maintenance program applied for each Protection System component type.

For Requirement R2 and Requirement R3, the Transmission Owner, Generator Owner, and Distribution Provider shall each keep documentation of the two most recent performances of each distinct maintenance activity for the Protection System **components**, or all performances of each distinct maintenance activity for the Protection System component since the previous scheduled audit date, whichever is longer.

Component – *A component is any individual discrete piece of equipment included in a Protection System, including but not limited to a protective relay or current sensing device. The designation of what constitutes a control circuit component is very dependent upon how an entity performs and tracks the testing of the control circuitry. Some entities test their control circuits on a breaker basis whereas others test their circuitry on a local zone of protection basis. Thus, entities are allowed the latitude to designate their own definitions of control circuit components. Another example of where the entity has some discretion on determining what constitutes a single component is the voltage and current sensing devices, where the entity may choose either to designate a full three-phase set of such devices or a single device as a single component.*

The Compliance Enforcement Authority shall keep the last periodic audit report and all requested and submitted subsequent compliance records.

1.4. Additional Compliance Information

None.

2. Violation Severity Levels

Requirement Number	Lower VSL	Moderate VSL	High VSL	Severe VSL
R1	Failed to specify whether one component type is being addressed by time-based or performance-based maintenance. (Part 1.2)	Failed to specify whether two component types are being addressed by time-based or performance-based maintenance. (Part 1.2)	Failed to include station batteries in a time-based program (Part 1.2) OR Failed to include all maintenance activities or intervals relevant for the identified monitoring attributes specified in Tables 1-1 through 1-5. (Part 1.4)	Entity has not established a PSMP. OR The entity's PSMP failed to address three or more component types included in the definition of 'Protection System' (Part 1.1) OR Failed to specify whether three or more component types are being addressed by time-based or performance-based maintenance.
R2	Entity has Protection System elements in a performance-based PSMP but has: 1) Failed to reduce countable events to less than 4% within three years OR 2) Failed to annually document program activities, results, maintenance dates, or countable events for 5% or less of components in any individual segment OR 3) Maintained a segment with 54-59 components or containing different manufacturers.	NA	Entity has Protection System elements in a performance-based PSMP but has failed to reduce countable events to less than 4% within three years.	Entity has Protection System components in a performance-based PSMP but has: 1) Failed to establish the entire technical justification described within R3 for the initial use of the performance-based PSMP OR 2) Failed to reduce countable events to less than 4% within five years OR 3) Failed to annually document program activities, results, maintenance dates, or countable events for over 5% of components in any individual segment OR 4) Maintained a segment with less

Requirement Number	Lower VSL	Moderate VSL	High VSL	Severe VSL
				than 54 components OR 5) Failed to: • Annually update the list of components, • Perform maintenance on the greater of 5% of the segment population or 3 components, • Annually analyze the program activities and results for each segment.
R3	Entity has failed to complete scheduled program on 5% or less of total Protection System components. OR Entity has failed to initiate resolution on 5% or less of identified maintenance correctable issues.	Entity has failed to complete scheduled program on greater than 5%, but no more than 10% of total Protection System components OR Entity has failed to initiate resolution on greater than 5%, but less than or equal to 10% of identified maintenance correctable issues.	Entity has failed to complete scheduled program on greater than 10%, but no more than 15% of total Protection System components OR Entity has failed to initiate resolution on greater than 10%, but less than or equal to 15% of identified.	Entity has failed to complete scheduled program on greater than 15% of total Protection System components OR Entity has failed to initiate resolution on greater than 15% of identified maintenance correctable issues.

E. Regional Variances

None

F. Supplemental Reference Document

The following documents present a detailed discussion about determination of maintenance intervals and other useful information regarding establishment of a maintenance program.

1. PRC-005-2 Protection System Maintenance Supplementary Reference and FAQ — February 2011.

Version History

Version	Date	Action	Change Tracking
2	TBD	Complete revision, absorbing maintenance requirements from PRC-005-1, PRC-008-0, PRC-011-0, PRC-017	Complete revision

Table 1-1 Component Type - Protective Relay **Note:** Table requirements apply to all components of Protection Systems except as noted.		
Component Attributes	**Maximum Maintenance Interval**	**Maintenance Activities**
Any unmonitored protective relay not having all the monitoring attributes of a category below.	6 calendar years	Verify that settings are as specified For non-microprocessor relays: • Test and, if necessary calibrate For microprocessor relays: • Verify operation of the relay inputs and outputs that are essential to proper functioning of the Protection System. • Verify acceptable measurement of power system input values.
Monitored microprocessor protective relay with the following: • Internal self diagnosis and alarming. • Voltage and/or current waveform sampling three or more times per power cycle, and conversion of samples to numeric values for measurement calculations by microprocessor electronics (see Table 2). • Alarming for power supply failure (see Table 2).	12 calendar years	Verify: • Settings are as specified. • Operation of the relay inputs and outputs that are essential to proper functioning of the Protection System. • Acceptable measurement of power system input values.
Monitored microprocessor protective relay with preceding row attributes and the following: • Ac measurements are continuously verified by comparison to an independent ac measurement source, with alarming for excessive error. (See Table 2) • Some or all binary or status inputs and control outputs are monitored by a process that continuously demonstrates ability to perform as designed, with alarming for failure. (See Table 2) • Alarming for change of settings. (See Table 2)	12 calendar years	Verify only the unmonitored relay inputs and outputs that are essential to proper functioning of the Protection System.

Table 1-2 Component Type - Communications Systems **Note:** Table requirements apply to all components of Protection Systems, except as noted.		
Component Attributes	**Maximum Maintenance Interval**	**Maintenance Activities**
Any unmonitored communications system necessary for correct operation of protective functions, and not having all the monitoring attributes of a category below.	3 calendar months	Verify that the communications system is functional.
	6 calendar years	Verify that the channel meets performance criteria pertinent to the communications technology applied (e.g signal level, reflected power, or data error rate). Verify essential signals to and from other Protection System components.
Any communications system with continuous monitoring or periodic automated testing for the presence of the channel function, and alarming for loss of function. (See Table 2)	12 calendar years	Verify that the channel meets performance criteria pertinent to the communications technology applied (e.g signal level, reflected power, or data error rate). Verify essential signals to and from other Protection System components.
Any communications system with continuous monitoring or periodic automated testing for the performance of the channel using criteria pertinent to the communications technology applied (e.g. signal level, reflected power, or data error rate, and alarming for excessive performance degradation). (See Table 2)	No periodic maintenance specified	None.

Table 1-3 Component Type - Voltage and Current Sensing Devices Providing Inputs to Protective Relays **Note:** Table requirements apply to all components of Protection Systems except as noted.		
Component Attributes	**Maximum Maintenance Interval**	**Maintenance Activities**
Any voltage and current sensing devices not having monitoring attributes of the category below.	12 calendar years	Verify that current and voltage signal values are provided to the protective relays.
Voltage and Current Sensing devices connected to microprocessor relays with AC measurements are continuously verified by comparison of sensing input value as measured by the microprocessor relay to an independent ac measurement source, with alarming for unacceptable error or failure.	No periodic maintenance specified	None.

Table 1-4(a) Component Type - Station dc Supply Using Vented Lead-Acid (VLA) Batteries		
Component Attributes	**Maximum Maintenance Interval**	**Maintenance Activities**
Protection System Station dc supply using **Vented Lead-Acid (VLA) batteries** not having monitoring attributes of Table 1-4(f). Protection System Station dc supply for distribution breakers for UFLS or UVLS are excluded (see Table 1-4(e)).	3 Calendar Months	Verify: • Station dc supply voltage Inspect: • Electrolyte level • For unintentional grounds
	18 Calendar Months	Verify: • Float voltage of battery charger • Battery continuity • Battery terminal connection resistance • Battery intercell or unit-to-unit connection resistance Inspect: • Cell condition of all individual battery cells where cells are visible – or measure battery cell/unit internal ohmic values where the cells are not visible • Physical condition of battery rack
	18 Calendar Months -or- 6 Calendar Years	Verify that the station battery can perform as designed by evaluating the measured cell/unit internal ohmic values to station battery baseline. -or- Verify that the station battery can perform as designed by conducting a performance, service, or modified performance capacity test of the entire battery bank.

Table 1-4(b) Component Type - Station dc Supply Using Valve-Regulated Lead-Acid (VRLA) Batteries		
Component Attributes	**Maximum Maintenance Interval**	**Maintenance Activities**
Station dc supply **with Valve Regulated Lead-Acid (VRLA) batteries** not having monitoring attributes of Table 1-4(f). Station dc supply for distribution breakers for UFLS or UVLS are excluded (see Table 1-4(e)).	3 Calendar Months	Verify: • Station dc supply voltage Inspect: • For unintentional grounds
	6 Calendar Months	Inspect: • Condition of all individual units by measuring battery cell/unit internal ohmic values.
	18 Calendar Months	Verify: • Float voltage of battery charger • Battery continuity • Battery terminal connection resistance • Battery intercell or unit-to-unit connection resistance Inspect: • Physical condition of battery rack
	6 Calendar Months -or- 3 Calendar Years	Verify that the station battery can perform as designed by evaluating the measured cell/unit internal ohmic values to station battery baseline. -or- Verify that the station battery can perform as designed by conducting a performance, service, or modified performance capacity test of the entire battery bank

Table 1-4(c) Component Type - Station dc Supply Using Nickel-Cadmium (NiCad) Batteries		
Component Attributes	**Maximum Maintenance Interval**	**Maintenance Activities**
Station dc supply **Nickel-Cadmium (NiCad) batteries** not having monitoring attributes of Table 1-4(f). Station dc supply for distribution breakers for UFLS or UVLS are excluded (see Table 1-4(e)).	3 Calendar Months	Verify: • Station dc supply voltage Inspect: • Electrolyte level • For unintentional grounds
	18 Calendar Months	Verify: • Float voltage of battery charger • Battery continuity • Battery terminal connection resistance • Battery intercell or unit-to-unit connection resistance Inspect: • Cell condition of all individual battery cells. • Physical condition of battery rack
	6 Calendar Years	Verify that the station battery can perform as designed by conducting a performance service, or modified performance capacity test of the entire battery bank.

Table 1-4(d) Component Type - Station dc Supply Using Non Battery Based Energy Storage		
Component Attributes	**Maximum Maintenance Interval**	**Maintenance Activities**
Any Protection System station dc supply not using a battery and not having monitoring attributes of Table 1-4(f). Protection System Station dc supply for distribution breakers for UFLS, UVLS and SPS are excluded (see Table 1-4(e)).	3 Calendar Months	Verify: • Station dc supply voltage Inspect: • For unintentional grounds
	18 Calendar Months	Inspect: Condition of non-battery based dc supply
	6 Calendar Years	Verify that the dc supply can perform as designed when ac power is not present.

Table 1-4(e) Component Type - Station dc Supply for Distribution Breakers		
Component Attributes	**Maximum Maintenance Interval**	**Maintenance Activities**
Any dc supply for tripping only distribution breakers as part of a UFLS or UVLS system, or SPS and not having monitoring attributes of Table 1-4(f).	When control circuits are verified (See Table 1-5)	Verify: • Station dc supply voltage

Table 1-4(f) Exclusions for Station dc Supply Monitoring Devices and Systems		
Component Attributes	**Maximum Maintenance Interval**	**Maintenance Activities**
Any station dc supply with high and low voltage monitoring and alarming of the battery charger voltage to detect charger overvoltage and charger failure. (See Table 2)	No periodic maintenance specified	No periodic verification of station dc supply voltage is required.
Any battery based station dc supply with electrolyte level monitoring and alarming in every cell (See Table 2)		No periodic inspection of the electrolyte level for each cell is required.
Any station dc supply with unintentional dc ground monitoring and alarming (See Table 2)		No periodic inspection of unintentional dc grounds is required.
Any station dc supply with charger float voltage monitoring and alarming to ensure correct float voltage is being applied on the station dc supply (See Table 2)		No periodic verification of float voltage of battery charger is required
Any battery based station dc supply with monitoring and alarming of battery string continuity (See Table 2)		No periodic verification of the battery continuity is required.
Any battery based station dc supply with monitoring and alarming of the intercell and/or terminal connection detail resistance of the entire battery (See Table 2)		No periodic verification of the intercell and terminal connection resistance is required.
Any lead acid battery based station dc supply with monitoring and alarming of internal Ohmic values of every cell (if available for measurement) or each unit and alarming when any cell/unit deviates by an unacceptable value from the baseline internal ohmic value. (See Table 2)		No periodic measurement and comparison to baseline of battery cell/unit internal ohmic values for VRLA batteries and VLA batteries where the cells are not visible are required. .

Table 1-5 Component Type - Control Circuitry **Note:** Table requirements apply to all components of Protection Systems, UVLS and UFLS Systems, and SPSs except as noted.		
Component Attributes	**Maximum Maintenance Interval**	**Maintenance Activities**
Trip coils or actuators of circuit breakers, interrupting devices, or mitigating devices (excluding UFLS or UVLS systems).	6 calendar years	Verify that each trip coil is able to operate the circuit breaker, interrupting device, or mitigating device.
Trip coils of circuit breakers and interrupting devices in UFLS or UVLS systems.	No periodic maintenance specified	None.
Electromechanical lockout and/or tripping auxiliary devices which are directly in a trip path from the protective relay to the interrupting device trip coil.	6 calendar years	Verify electrical operation of electromechanical trip and auxiliary devices.
Unmonitored control circuitry associated with protective functions.	12 calendar years	Verify all paths of the control and trip circuits.
Control circuitry whose continuity and energization or ability to operate are monitored and alarmed (See Table 2).	No periodic maintenance specified	None.

Table 2 – Alarming Paths and Monitoring In Tables 1-1 through 1-5, alarm attributes used to justify extended maximum maintenance intervals and/or reduced maintenance activities are subject to the following maintenance requirements		
Component Attributes	**Maximum Maintenance Interval**	**Maintenance Activities**
Any alarm path through which alarms in Tables 1-1 through 1-5 are conveyed from the alarm origin to the location where corrective action can be initiated, and not having all the attributes of the "Alarm Path with monitoring" category below. Alarms are reported within 24 hours of DETECTION to a location where corrective action can be initiated.	12 Calendar Years	Verify that the alarm path conveys alarm signals to a location where corrective action can be initiated.
Alarm Path with monitoring: The location where corrective action is taken receives an alarm within 24 hours for failure of any portion of the alarming path from the alarm origin to the location where corrective action can be initiated.	No periodic maintenance specified	No periodic maintenance specified.

PRC-005 — Attachment A

Criteria for a Performance-Based Protection System Maintenance Program

Purpose: To establish a technical basis for initial and continued use of a performance-based Protection System Maintenance Program (PSMP).

To establish the technical justification for the initial use of a performance-based PSMP:

1. Develop a list with a description of components included in each designated segment of the Protection System component population, with a minimum **segment** population of 60 components.
2. Maintain the components in each segment according to the time-based maximum allowable intervals established in Tables 1-1through 1-5 until results of maintenance activities for the segment are available for a minimum of 30 individual components of the segment.

> **Segment** – *Protection Systems or components of a consistent design standard, or a particular model or type from a single manufacturer that typically share other common elements. Consistent performance is expected across the entire population of a segment. A segment must contain at least sixty (60) individual components.*

3. Document the maintenance program activities and results for each segment, including maintenance dates and countable events for each included component.
4. Analyze the maintenance program activities and results for each segment to determine the overall performance of the segment and develop maintenance intervals.
5. Determine the maximum allowable maintenance interval for each segment such that the segment experiences **countable events** on no more than 4% of the components within the segment, for the greater of either the last 30 components maintained or all components maintained in the previous year.

> **Countable Event** – *A component which has failed and requires repair or replacement, any condition discovered during the verification activities in Tables 1-1 through 1-5 which requires corrective action, or a Misoperation attributed to hardware failure or calibration failure. Misoperations due to product design errors, software errors, relay settings different from specified settings, Protection System component configuration errors, or Protection System application errors are not included in Countable Events.*

To maintain the technical justification for the ongoing use of a performance-based PSMP:

1. At least annually, update the list of Protection System components and segments and/or description if any changes occur within the segment.
2. Perform maintenance on the greater of 5% of the components (addressed in the performance based PSMP) in each segment or 3 individual components within the segment in each year.
3. For the prior year, analyze the maintenance program activities and results for each segment to determine the overall performance of the segment.

4. If the components in a Protection System segment maintained through a performance-based PSMP experience 4% or more countable events, develop, document, and implement an action plan to reduce the countable events to less than 4% of the segment population within 3 years.
5. Using the prior year's data, determine the maximum allowable maintenance interval for each segment such that the segment experiences countable events on no more than 4% of the components within the segment, for the greater of either the last 30 components maintained or all components maintained in the previous year.

Standard Development Roadmap

This section is maintained by the drafting team during the development of the standard and will be removed when the standard becomes effective.

Development Steps Completed:

1. Standards Committee approves SAR for posting on June 5, 2007.
2. The SAR was posted for comment from June 11, 2007–July 10, 2007.
3. The SC approves development of the standard on August 13, 2007.
4. First posting of revised standard on July 24, 2009.
5. Second posting of revised standard on June 11, 2010
6. Third posting of revised standard on ~~September 24~~November 17, 2010

Description of Current Draft:

This is the ~~third~~ fourth draft of the Standard. This standard merges previous standards PRC-005-1, PRC-008-0, PRC-011-0, and PRC-017-0. It also addresses FERC comments from Order 693, and addresses observations from the NERC System Protection and Control Task Force, as presented in *NERC SPCTF Assessment of Standards: PRC-005-1 — Transmission and Generation Protection System Maintenance and Testing, PRC-008-0 — Underfrequency Load Shedding Equipment Maintenance Programs, PRC-011-0 — UVLS System Maintenance and Testing, PRC-017-0 — Special Protection System Maintenance and Testing.*

Future Development Plan:

Anticipated Actions	Anticipated Date
1. Post for combined 30-day comment and ballot.	~~November 17-December 17, 2010~~15~~-~~ April 125, 2011
2. Conduct successive ballot	~~December 7 - December 17, 2010~~May 2 – May 12, 2011
3. Drafting Team Responds to Comments	~~January 5, 2011 - January 25~~ May 16 – June 3, 2011

Definitions of Terms Used in Standard

This section includes all newly defined or revised terms used in the proposed standard. Terms already defined in the Reliability Standards Glossary of Terms are not repeated here. New or revised definitions listed below become approved when the proposed standard is approved. When the standard becomes effective, these defined terms will be removed from the individual standard and added to the Glossary.

Protection System Maintenance Program (PSMP) — An ongoing program by which Protection System components are kept in working order and proper operation of malfunctioning components is restored. A maintenance program for a specific component includes one or more of the following activities:

- Verify — Determine that the component is functioning correctly.
- Monitor — Observe the routine in-service operation of the component.
- Test — Apply signals to a component to observe functional performance or output behavior, or to diagnose problems.
- Inspect — Detect visible signs of component failure, reduced performance and degradation.
- Calibrate — Adjust the operating threshold or measurement accuracy of a measuring element to meet the intended performance requirement.
- Restore — Return malfunctioning components to proper operation.

Protection System (NERC Board of Trustees ~~modification~~Approved Definition)

- Protective relays which respond to electrical quantities,
- communications systems necessary for correct operation of protective functions,
- voltage and current sensing devices providing inputs to protective relays,
- station dc supply associated with protective functions (including station batteries, battery chargers, and non-battery-based dc supply), and
- control circuitry associated with protective functions through the trip coil(s) of the circuit breakers or other interrupting devices.

The following terms are defined for use only within PRC-005-2, and should remain with the standard upon approval rather than being moved to the Glossary of Terms.

Maintenance Correctable Issue – Failure of a component to operate within design parameters such that it cannot be restored to functional order by repair or calibration during performance of the initial on-site activity. Therefore this issue requires follow-up corrective action.

Segment – Protection Systems or components of a consistent design standard, or a particular model or type from a single manufacturer that typically share other common elements. Consistent performance is expected across the entire population of ~~a segment~~a segment. A segment must contain at least sixty (60) individual components.

Component Type - Any one of the five specific elements of the Protection System definition.

Component – A component is any individual discrete piece of equipment included in a Protection System, ~~such as~~including but not limited to a protective relay or current sensing device. ~~For components such as control circuits, t~~The designation of what constitutes a control circuit component is very dependent upon how an entity performs and tracks the testing of the control circuitry. Some entities test

their control circuits on a breaker basis whereas others test their circuitry on a ~~"~~local zone of protection~~"~~ basis. Thus, entities are allowed the latitude to designate their own definitions of ~~"~~control circuit components.~~"~~ Another example of where the entity has some discretion on determining what constitutes a single component is the voltage and current sensing devices, where the entity may choose either to designate a full three-phase set of such devices or a single device as a single component.

Countable Event – ~~Any failure of a~~A component which has failed ~~requires~~and requires repair or replacement, any condition discovered during the verification activities in Tables 1-1 through 1-5 which requires corrective action, or a Misoperation attributed to hardware failure or calibration failure. Misoperations due to product design errors, software errors, relay settings different from specified settings, Protection System component configuration errors, or Protection System application errors are not included in Countable Events.

A. Introduction

1. **Title:** **Protection System Maintenance**

2. **Number:** PRC-005-2

3. **Purpose:** To ensure all transmission and generation Protection Systems affecting the reliability of the Bulk Electric System (BES) are maintained.

4. **Applicability:**

   4.1. Functional Entities:

   4.1.1 Transmission Owners

   4.1.2 Generator Owners

   4.1.3 Distribution Providers

   4.2. Facilities:

   4.2.1 Protection Systems ~~applied on, or~~ designed to provide protection for~~, the~~ BES Element(s).

   ~~4.2.1~~4.2.2 Protection Systems used for underfrequency load-shedding systems installed per ERO underfrequency load-shedding requirements.

   ~~4.2.2~~4.2.3 Protection Systems used for undervoltage load-shedding systems installed to prevent system voltage collapse or voltage instability for BES reliability.

   ~~4.2.3~~4.2.4 Protection Systems installed as a Special Protection System (SPS) for BES reliability.

   ~~4.2.4~~4.2.5 Protection Systems for generator Facilities that are part of the BES, including:

   ~~4.2.4.1~~4.2.5.1 Protection Systems that act to trip the generator either directly or via generator lockout or auxiliary tripping relays.

   ~~4.2.4.2~~4.2.5.2 Protection Systems for generator step-up transformers for generators that are part of the BES.

   ~~4.2.4.3~~4.2.5.3 Protection Systems for transformers connecting aggregated generation, where the aggregated generation is part of the BES (e.g., transformers connecting facilities such as wind-farms to the BES).

   ~~4.2.4.4~~4.2.5.4 Protection Systems for generator-connected station service transformers for generators that are part of the BES.

   ~~**4.2.4.5** Protection Systems for system-connected station service transformers for generators that are part of the BES.~~

5. **(Proposed) Effective Date:** See Implementation Plan

B. Requirements

R1. Each Transmission Owner, Generator Owner, and Distribution Provider shall establish a Protection System Maintenance Program (PSMP) for its Protection Systems ~~applied on, or~~ designed to provide protection for~~, the~~ BES Element(s). The PSMP shall: *[Violation Risk Factor: Medium] [Time Horizon: Long Term Planning]*

1.1. Address all Protection System component types.

1.2. Identify which maintenance method (time-based, performance-based (per PRC-005 Attachment A), or a combination) is used to address each Protection System component type~~s are addressed through time-based, performance-based (per PRC-005-Attachment A), or a combination of these maintenance methods (per PRC-005-Attachment A)~~. All batteries associated with the station dc supply component type of a Protection System shall be included in a time-based program as described in Table 1-4.

1.3. Identify the associated maintenance intervals for time-based programs, to be no less frequent than the intervals established in Table 1-1 through 1-5 and Table 2.

~~**1.4.**~~Include all applicable monitoring attributes and related maintenance activities applied to each Protection System component type~~, to include those~~ consistent with the maintenance intervals specified in Tables 1-1 through 1-5 and Table 2.

~~**1.5.** Identify calibration tolerances or other equivalent parameters for each Protection System component type that establish acceptable parameters for the conclusion of maintenance activities.~~

1.4. ~~Each Transmission Owner, Generator Owner, and Distribution Provider that uses maintenance intervals for monitored Protection Systems described in Tables 1-1 through 1-5, shall verify those components possess the monitoring attributes identified in Tables 1-1 through 1-5 in its PSMP. *[Violation Risk Factor: Medium] [Time Horizon: Long Term Planning]*~~

R2. Each Transmission Owner, Generator Owner, and Distribution Provider that uses performance-based maintenance intervals in its PSMP shall follow the procedure established in PRC-005 Attachment A to establish and maintain its performance-based intervals. *[Violation Risk Factor: Medium] [Time Horizon: Operations Planning]*

~~**R3.**~~ Each Transmission Owner, Generator Owner, and Distribution Provider shall implement and follow its PSMP and initiate resolution of any identified maintenance correctable issues~~, including identification of the resolution of all maintenance correctable issues as follows:~~ . *[Violation Risk Factor: High] [Time Horizon: Operations Planning]*

~~**R4.** Perform the maintenance activities for all Protection System components according to the PSMP established in accordance with Requirement R1:~~

~~**R5.** For time-based maintenance programs, perform maintenance activities no less frequently than the maximum allowable intervals established in Tables 1-1 through 1-5.~~

~~**R6.** For performance-based maintenance programs, perform the maintenance activities no less frequently than the intervals established in Requirement R3.~~

~~**R7.**~~**R3.** ~~Either verify that the components are within the acceptable parameters established in accordance with Requirement R1, Part 1.5 at the conclusion of the maintenance activities, or initiate resolution of any identified maintenance correctable issues.~~

C. Measures

~~**M1.**~~ Each Transmission Owner, Generator Owner and Distribution Provider shall have a current or updated documented Protection System Maintenance Program that addresses all component types of its Protection Systems, as required by Requirement R1. For each Protection System component type, the documentation shall include the type of maintenance program applied (time-based, performance-based, or a combination of these maintenance methods), maintenance activities, ~~and~~ maintenance intervals, and, for component types that use

monitoring to extend the intervals, the appropriate monitoring attributes as specified in Requirement R1, Parts 1.1 through 1.~~5~~4.

M1. ~~Each Transmission Owner, Generator Owner, and Distribution Provider that uses maintenance intervals for monitored Protection Systems shall have evidence such as engineering drawings or manufacturer's information showing that the components possess the monitoring attributes identified in Tables 1-1 through 1-5, as required by Requirement R2.~~

M2. Each Transmission Owner, Generator Owner, and Distribution Provider that uses a performance-based maintenance program shall have evidence which may include but not limited to ~~such as~~ equipment lists, dated maintenance records, and dated analysis records and results that its current performance-based maintenance program is in accordance with Requirement ~~R3~~R2.

M3. Each Transmission Owner, Generator Owner, and Distribution Provider shall have evidence ~~such as~~which may include but not limited to dated maintenance records, dated maintenance summaries, dated check-off lists, dated inspection records, or dated work orders as evidence that it has implemented the Protection System Maintenance Program and initiated resolution of identified maintenance correctable issues in accordance with Requirement ~~R4~~R3.

D. Compliance

1. Compliance Monitoring Process

1.1. Compliance Monitoring Responsibility

Regional Entity

1.2. Compliance Monitoring and Enforcement Processes:

Compliance Audits

Self-Certifications

Spot Checking

Compliance Violation Investigations

Self-Reporting

Complaints

1.3. Data Retention

The Transmission Owner, Generator Owner, and Distribution Provider shall each keep data or evidence to demonstrate compliance as identified below unless directed by its Compliance Enforcement Authority to retain specific evidence for a longer period of time as part of an investigation.

For Requirement R1, the Transmission Owner, Generator Owner, and Distribution Provider shall each keep its current dated Protection System Maintenance Program including the documentation that specifies the type of maintenance program applied for each Protection System component type.

~~For R2, the Transmission Owner, Generator Owner, and Distribution Provider shall each keep the evidence that proves the Protection System components possess the identified monitoring attributes as long as they are used to justify the intervals and activities associated with a performance-based maintenance program as identified within Tables 1-1 through 1-5.~~

For Requirement ~~R3~~ R2 and Requirement ~~R4~~R3, the Transmission Owner, Generator Owner, and Distribution Provider shall each keep documentation of the two most recent performances of each distinct maintenance activity for the Protection System components,~~-~~ or all performances of each distinct maintenance activity for the Protection System component since ~~or to~~ the previous scheduled audit date, whichever is longer.

The Compliance Enforcement Authority shall keep the last periodic audit report and all requested and submitted subsequent compliance records.

1.4. Additional Compliance Information

None.

2. Violation Severity Levels

Requirement Number	Lower VSL	Moderate VSL	High VSL	Severe VSL
R1	Failed to specify whether one component type is being addressed by time-based or performance-based maintenance. (~~Clause~~Part 1.2)	Failed to specify whether two component types are being addressed by time-based or performance-based maintenance. (~~Clause~~Part 1.2)	Failed to include station batteries in a time-based program (~~Clause~~Part 1.2) OR Failed to include all maintenance activities or intervals relevant for the identified monitoring attributes specified in Tables 1-1 through 1-5. (~~Clause~~Part 1.4) ~~OR~~ ~~Failed to establish calibration tolerance or equivalent parameters to determine if components are within acceptable parameters.~~	Entity has not established a PSMP. OR The entity's PSMP failed to address three or more component types included in the definition of 'Protection System' (~~Clause~~Part 1.1) OR Failed to specify whether three or more component types are being addressed by time-based or performance-based maintenance.
~~R2~~	~~Entity has Protection System components in a condition-based PSMP, but documentation to support the monitoring attributes used to determine relevant intervals is incomplete on no more than 5% of the Protection System components maintained according to Tables 1-1 through 1-5.~~	~~Entity has Protection System elements in a condition-based PSMP, but documentation to support monitoring attributes used to determine relevant intervals is incomplete on more than 5%, but 10% or less, of the Protection System components maintained according to Tables 1-1 through 1-5.~~	~~Entity has Protection System elements in a condition-based PSMP, but documentation to support monitoring attributes used to determine relevant intervals is incomplete on more than 10%, but 15% or less, of the Protection System components maintained according to Tables 1-1 through 1-5.~~	~~Entity has Protection System elements in a condition-based PSMP, but documentation to support monitoring attributes used to determine relevant intervals is incomplete on more than 15% of the Protection System components maintained according to Tables 1-1 through 1-5.~~
~~R3~~R2	Entity has Protection System elements in a performance-based PSMP but has: 1) ~~1)~~ Failed to reduce countable events to less than 4% within three years OR	NA	Entity has Protection System elements in a performance-based PSMP but has failed to reduce countable events to less than 4% within four years.	Entity has Protection System components in a performance-based PSMP but has: 1) Failed to establish the entire technical justification described within R3 and Attachment A for the initial use of the performance-based

Requirement Number	Lower VSL	Moderate VSL	High VSL	Severe VSL
	2) ~~2)~~ Failed to annually document program activities, results, maintenance dates, or countable events for 5% or less of components in any individual segment OR 3) Maintained a segment with 54-59 components or containing different manufacturers.			PSMP OR ~~1)~~2) Failed to reduce countable events to less than 4% within five years OR ~~2~~3) Failed to annually document program activities, results, maintenance dates, or countable events for over 5% of components in any individual segment OR ~~3~~4) Maintained a segment with less than 54 components OR ~~4~~5) Failed to: • Annually update the list of components, • Perform maintenance on the greater of 5% of the segment population or 3 components, • Annually analyze the program activities and results for each segment.
~~R4~~R3	Entity has failed to complete scheduled program on 5% or less of total Protection System components. OR Entity has failed to initiate resolution on 5% or less of identified maintenance~~-~~ correctable issues.	Entity has failed to complete scheduled program on greater than 5%, but no more than 10% of total Protection System components OR Entity has failed to initiate resolution on greater than 5%, but less than or equal to~~no more than~~ 10% of identified maintenance~~-~~	Entity has failed to complete scheduled program on greater than 10%, but no more than 15% of total Protection System components OR Entity has failed to initiate resolution on greater than 10%, but less than or equal to~~no more than~~ 15% of	Entity has failed to complete scheduled program on greater than 15% of total Protection System components OR Entity has failed to initiate resolution on greater than 15% of identified maintenance~~-~~ correctable

Requirement Number	Lower VSL	Moderate VSL	High VSL	Severe VSL
		correctable issues.	identified.	issues.

E. Regional Variances

None

F. Supplemental Reference Document~~s~~

The following documents present a detailed discussion about determination of maintenance intervals and other useful information regarding establishment of a maintenance program.

~~1.~~ PRC-005-2 Protection System Maintenance Supplementary Reference and FAQ — ~~July 2009~~February 2011.

1. ~~NERC Protection System Maintenance Standard PRC-005-2 FREQUENTLY ASKED QUESTIONS — Practical Compliance and Implementation DRAFT 1.0 — June 2009~~

Version History

Version	Date	Action	Change Tracking
2	TBD	Complete revision, absorbing maintenance requirements from PRC-005-1, PRC-008-0, PRC-011-0, PRC-017	Complete revision

Table 1-1 Component Type - Protective Relay **Note:** Table requirements apply to all components of Protection Systems, UVLS and UFLS Systems, and SPSs except as noted.		
Component Attributes	**Maximum Maintenance Interval**	**Maintenance Activities**
Any unmonitored protective relay not having all the monitoring attributes of a category below.	6 calendar years	Verify that settings are as specified For non-microprocessor relays: • Test and, if necessary calibrate For microprocessor relays: • Verify operation of the relay inputs and outputs that are essential to proper functioning of the Protection System. • Verify acceptable measurement of power system input values.
Monitored microprocessor protective relay with the following:~~:~~ • Internal self diagnosis and alarming. • Voltage and/or current waveform sampling three or more times per power cycle, and conversion of samples to numeric values for measurement calculations by microprocessor electronics ~~that are also performing self monitoring and alarming~~ (see Table 2). • Alarming for power supply failure (see Table 2).	12 calendar years	Verify: • Settings are as specified. • Operation of the relay inputs and outputs that are essential to proper functioning of the Protection System. • Acceptable measurement of power system input values.
Monitored microprocessor protective relay with preceding row attributes and the following: • Ac measurements are continuously verified by comparison to an independent ac measurement source, with alarming for excessive error. (See Table 2) • Some or all binary or status inputs and control outputs are monitored by a process that continuously demonstrates ability to perform as designed, with alarming for failure. (See Table 2) • Alarming for change of settings. (See Table 2)	12 calendar years	Verify only the unmonitored relay inputs and outputs that are essential to proper functioning of the Protection System.

Table 1-2 Component Type - Communications Systems **Note:** Table requirements apply to all components of Protection Systems, UVLS and UFLS Systems, and SPSs except as noted.		
Component Attributes	**Maximum Maintenance Interval**	**Maintenance Activities**
Any unmonitored communications system necessary for correct operation of protective functions, and not having all the monitoring attributes of a category below.	3 calendar months	Verify that the communications system is functional.
	6 calendar years	Verify that the channel meets performance criteria pertinent to the communications technology applied (e.g ~~such as~~ signal level, reflected power, or data error rate). Verify essential signals to and from other Protection System components.
Any communications system with continuous monitoring or periodic automated testing for the presence of the channel function, and alarming for loss of function. (See Table 2)	12 calendar years	Verify that the channel meets performance criteria pertinent to the communications technology applied (e.g ~~such as~~ signal level, reflected power, or data error rate). Verify essential signals to and from other Protection System components.
Any communications system with continuous monitoring or periodic automated testing for the performance of the channel using criteria pertinent to the communications technology applied (~~e.g~~e.g. ~~such as~~ signal level, reflected power, or data error rate, and alarming for excessive performance degradation). (See Table 2)	No periodic maintenance specified	None.

Table 1-3 Component Type - Voltage and Current Sensing Devices Providing Inputs to Protective Relays **Note:** Table requirements apply to all components of Protection Systems, UVLS and UFLS Systems, and SPSs except as noted.		
Component Attributes	**Maximum Maintenance Interval**	**Maintenance Activities**
Any voltage and current sensing devices not having monitoring attributes of the category below.	12 calendar years	Verify that ~~acceptable measurements of the~~ current and voltage ~~signals~~ signal values are ~~received by~~provided to the protective relays.
Voltage and Current Sensing devices connected to microprocessor relays with AC measurements are continuously verified by comparison of sensing input value as measured by the microprocessor relay to an independent ac measurement source, with alarming for unacceptable error or failure.	No periodic maintenance specified	None.

~~Table 1-4~~ ~~Component Type – Station dc Supply~~ ~~Note: Table requirements apply to all components of Protection Systems, UVLS and UFLS Systems, and SPSs except as noted.~~		
~~Component Attributes~~	~~Maximum Maintenance Interval~~	~~Activities~~
~~Any dc supply for a UFLS or UVLS system.~~	~~When control circuits are verified~~	~~Verify dc supply voltage~~
~~Any unmonitored station dc supply not having the monitoring attributes of a category below. (excluding UFLS and UVLS)~~	~~3 Calendar Months~~	~~Verify:~~ ~~• Station dc supply voltage~~ ~~Inspect:~~ ~~• Electrolyte level (excluding valve-regulated lead-acid batteries)~~ ~~• For unintentional grounds~~
	~~18 Calendar Months~~	~~Verify:~~ ~~• State of charge of the individual battery cells/units~~ ~~• Float voltage of battery charger~~ ~~• Battery continuity~~ ~~• Battery terminal connection resistance~~ ~~• Battery internal cell-to-cell or unit-to-unit connection resistance (where available to measure)~~ ~~Inspect:~~ ~~• Cell condition of all individual battery cells where cells are visible – or measure battery cell/unit internal ohmic values where the cells are not visible~~ ~~• Physical condition of battery rack~~ ~~• Condition of non-battery-based dc supply~~
~~Any unmonitored Station dc supply in which a battery is not used and not having the monitoring attributes of a category below. (excluding UFLS and UVLS)~~	~~6 Calendar Years~~	~~Verify that the dc supply can perform as designed when ac power from the grid is not present.~~
~~Unmonitored Station dc supply with Valve Regulated Lead-Acid (VRLA) batteries that does not have the monitoring attributes of a category below. (excluding UFLS and UVLS)~~	~~3 Calendar Months~~	~~Verify that the station battery can perform as designed by evaluating the measured cell/unit internal ohmic values to station battery baseline.~~

~~Table 1-4~~ ~~Component Type – Station dc Supply~~ ~~Note: Table requirements apply to all components of Protection Systems, UVLS and UFLS Systems, and SPSs except as noted.~~		
~~Component Attributes~~	~~Maximum Maintenance Interval~~	~~Activities~~
	~~or~~	
	~~3 Calendar Years~~	~~Verify that the station battery can perform as designed by conducting a performance or service capacity test of the entire battery bank.~~
~~Unmonitored Station dc supply with Vented Lead-Acid Batteries (VLA) that does not have the monitoring attributes of a category below. (excluding UFLS and UVLS)~~	~~18 Calendar Months~~	~~Verify that the station battery can perform as designed by evaluating the measured cell/unit internal ohmic values to station battery baseline.~~
	~~or~~	
	~~6 Calendar Years~~	~~Verify that the station battery can perform as designed by conducting a performance, service, or modified performance capacity test of the entire battery bank.~~
~~Unmonitored Station dc supply with Nickel-Cadmium (Ni-Cad) batteries that does not have the monitoring attributes of a category below. (excluding UFLS and UVLS)~~	~~6 Calendar Years~~	~~Verify that the station battery can perform as designed by conducting a performance service, or modified performance capacity test of the entire battery bank.~~
~~Monitored Station dc supply (excluding UFLS and UVLS) with:~~ ~~Monitor and alarm for variations from defined levels (See Table 2):~~ ~~• Station dc supply voltage (voltage of battery charger)~~ ~~• State of charge of the individual battery cell/units~~ ~~• Battery continuity of station battery~~ ~~• Cell-to-cell (if available) and battery terminal resistance~~	~~18 calendar months~~	~~Inspect:~~ ~~• Cell condition of all individual battery cells where cells are visible – or measure battery cell/unit internal ohmic values where the cells are not visible~~ ~~• Physical condition of battery rack~~ ~~• Condition of non-battery-based dc supply~~

~~Table 1-4~~ ~~Component Type – Station dc Supply~~ ~~Note: Table requirements apply to all components of Protection Systems, UVLS and UFLS Systems, and SPSs except as noted.~~		
~~Component Attributes~~	~~Maximum Maintenance Interval~~	~~Activities~~
~~• Electrolyte level of all cells in a station battery~~ ~~• Unintentional dc grounds~~ ~~• Cell/unit internal ohmic values of station battery~~	~~6 calendar years~~	~~Verify that the monitoring devices are calibrated (where necessary)~~
~~Continuously monitored Station dc supply (excludes UFLS and UVLS) with preceding row attributes and the following:~~ ~~• The monitoring devices themselves are monitored.~~	~~18 calendar months~~	~~Inspect:~~ ~~• Cell condition of all individual battery cells where cells are visible – or measure battery cell/unit internal ohmic values where the cells are not visible~~ ~~• Physical condition of battery rack~~ ~~• Condition of non-battery-based dc supply~~

Table 1-4(a) Component Type - Station dc Supply Using Vented Lead-Acid (VLA) Batteries		
Component Attributes	**Maximum Maintenance Interval**	**Maintenance Activities**
Station dc supply with **Vented Lead-Acid (VLA) batteries** not having monitoring attributes of Table 1-4(f). Station dc supply for distribution breakers for UFLS or UVLS are excluded (see Table 1-4(e)).	3 Calendar Months	Verify: • Station dc supply voltage Inspect: • Electrolyte level • For unintentional grounds
	18 Calendar Months	Verify: • Float voltage of battery charger • Battery continuity • Battery terminal connection resistance • Battery intercell or unit-to-unit connection resistance Inspect: • Cell condition of all individual battery cells where cells are visible – or measure battery cell/unit internal ohmic values where the cells are not visible • Physical condition of battery rack
	18 Calendar Months -or- 6 Calendar Years	Verify that the station battery can perform as designed by evaluating the measured cell/unit internal ohmic values to station battery baseline. -or- Verify that the station battery can perform as designed by conducting a performance, service, or modified performance capacity test of the entire battery bank.

Table 1-4(b) Component Type - Station dc Supply Using Valve-Regulated Lead-Acid (VRLA) Batteries		
Component Attributes	**Maximum Maintenance Interval**	**Maintenance Activities**
Station dc supply **with Valve Regulated Lead-Acid (VRLA) batteries** not having monitoring attributes of Table 1-4(f). Station dc supply for distribution breakers for UFLS or UVLS are excluded (see Table 1-4(e)).	3 Calendar Months	Verify: • Station dc supply voltage Inspect: • For unintentional grounds
	6 Calendar Months	Inspect: • Condition of all individual units by measuring battery cell/unit internal ohmic values.
	18 Calendar Months	Verify: • Float voltage of battery charger • Battery continuity • Battery terminal connection resistance • Battery intercell or unit-to-unit connection resistance Inspect: • Physical condition of battery rack
	6 Calendar Months -or- 3 Calendar Years	Verify that the station battery can perform as designed by evaluating the measured cell/unit internal ohmic values to station battery baseline. -or- Verify that the station battery can perform as designed by conducting a performance, service, or modified performance capacity test of the entire battery bank

Table 1-4(c) Component Type - Station dc Supply Using Nickel-Cadmium (NiCad) Batteries		
Component Attributes	**Maximum Maintenance Interval**	**Maintenance Activities**
Station dc supply **Nickel-Cadmium (NiCad) batteries** not having monitoring attributes of Table 1-4(f). Station dc supply for distribution breakers for UFLS or UVLS are excluded (see Table 1-4(e)).	3 Calendar Months	Verify: • Station dc supply voltage Inspect: • Electrolyte level • For unintentional grounds
	18 Calendar Months	Verify: • Float voltage of battery charger • Battery continuity • Battery terminal connection resistance • Battery intercell or unit-to-unit connection resistance Inspect: • Cell condition of all individual battery cells. • Physical condition of battery rack
	6 Calendar Years	Verify that the station battery can perform as designed by conducting a performance service, or modified performance capacity test of the entire battery bank.

Table 1-4(d) Component Type - Station dc Supply Using Non Battery Based Energy Storage		
Component Attributes	**Maximum Maintenance Interval**	**Maintenance Activities**
Any station dc supply not using a battery and not having monitoring attributes of Table 1-4(f). Station dc supply for distribution breakers for UFLS or UVLS are excluded (see Table 1-4(e)).	3 Calendar Months	Verify: • Station dc supply voltage Inspect: • For unintentional grounds
	18 Calendar Months	Inspect: Condition of non-battery based dc supply
	6 Calendar Years	Verify that the dc supply can perform as designed when ac power is not present.

Table 1-4(e) Component Type - Station dc Supply for Distribution Breakers		
Component Attributes	**Maximum Maintenance Interval**	**Maintenance Activities**
Any dc supply for tripping only distribution breakers as part of a UFLS or UVLS system, or SPS and not having monitoring attributes of Table 1-4(f).	When control circuits are verified	Verify: • Station dc supply voltage~~Verify:~~ ~~dc supply voltage~~

Table 1-4(f) Exclusions for Monitoring Devices and Systems		
Component Attributes	**Maximum Maintenance Interval**	**Maintenance Activities**
Any station dc supply with high and low voltage monitoring and alarming of the battery charger voltage to detect charger overvoltage and charger failure. (See Table 2)	No periodic maintenance specified ~~6 calendar years~~ ~~6 calendar years~~ ~~6 calendar years~~ ~~6 calendar years~~ ~~6 calendar years~~ ~~6 calendar years~~	No periodic verification of station ~~battery charger~~dc supply voltage is required.
Any battery based station dc supply with electrolyte level monitoring and alarming in every cell (See Table 2)		No periodic ~~verification~~ inspection of the electrolyte level for each cell is required.
Any station dc supply with unintentional dc ground monitoring and alarming (See Table 2)		No periodic ~~verification~~ inspection of unintentional dc grounds is required.
Any station dc supply with charger float voltage monitoring and alarming to ensure correct float voltage is being applied on the station dc supply.~~Any battery based station dc supply with monitoring and alarming of the state of charge of the battery system (See Table 2)~~		No periodic verification of float voltage of battery charger is required~~No periodic verification of the battery state of charge is required.~~
Any battery based station dc supply with monitoring and alarming of battery string continuity (See Table 2)		No periodic verification of the battery ~~string~~ continuity is required.
Any battery based station dc supply with monitoring and alarming of the ~~Cell-to-~~ intercell and/or terminal connection detail resistance of the entire battery (See Table 2)		No periodic verification of the ~~cell-to-~~ intercell and terminal connection resistance is required.
Any lead acid battery based station dc supply with monitoring and alarming of internal Ohmic values of every cell (if available for measurement) or each unit and alarming when any cell/unit deviates by an unacceptable value from the -baseline internal ohmic value. (See Table 2)		No periodic measurement and comparison to baseline of battery cell/unit internal ohmic values for VRLA batteries and VLA batteries where the cells are not visible are required. ~~verification of each cell or unit's Ohmic resistance is required~~.

Table 1-5 Component Type - Control Circuitry **Note:** Table requirements apply to all components of Protection Systems, UVLS and UFLS Systems, and SPSs except as noted.		
Component Attributes	**Maximum Maintenance Interval**	**Maintenance Activities**
Trip coils or actuators of circuit breakers, interrupting devices, or mitigating devices (excluding UFLS or UVLS systems).	6 calendar years	Verify that each trip coil is able to operate the circuit breaker, interrupting device, or mitigating device.
Trip coils of circuit breakers and interrupting devices in UFLS or UVLS systems.	No periodic maintenance specified	None.
Electromechanical ~~trip or~~ lockout and/or tripping auxiliary devices which are directly in a trip path from the protective relay to the interrupting device trip coil.	6 calendar years	Verify electrical operation of electromechanical trip and auxiliary devices.
Unmonitored ~~Control~~ control circuitry associated with protective functions.	12 calendar years	Verify all paths of the control and trip circuits.
Control circuitry whose continuity and energization or ability to operate are monitored and alarmed (See Table 2).	No periodic maintenance specified	None.

Table 2 – Alarming Paths and Monitoring In Tables 1-1 through 1-5, alarm attributes used to justify extended maximum maintenance intervals and/or reduced maintenance activities are subject to the following maintenance requirements		
Component Attributes	**Maximum Maintenance Interval**	**Maintenance Activities**
Any alarm path through which alarms in Tables 1-1 through 1-5 are conveyed from the alarm origin to the location ~~of~~ where corrective action can be initiated, and not having all the attributes of the ~~category~~ "Alarm Path with monitoring" category below. Alarms are ~~automatically~~ reported within 24 hours of DETECTION to a location where corrective action can be ~~taken~~initiated.	~~When alarm producing device or system is verified~~12 Calendar Years	Verify that the alarm path conveys alarm signals ~~are conveyed~~ to a location where corrective action can be ~~taken~~initiated.
Alarm Path with monitoring: The location where corrective action is taken receives an alarm within 24 hours for failure of any portion of the alarming path from the alarm origin to the location where corrective action can be ~~taken~~initiated.	No periodic maintenance specified	No periodic maintenance specified~~None~~.

PRC-005 — Attachment A

Criteria for a Performance-Based Protection System Maintenance Program

Purpose: To establish a technical basis for initial and continued use of a performance-based Protection System Maintenance Program (PSMP).

To establish the technical justification for the initial use of a performance-based PSMP:

1. Develop a list with a description of components included in each designated segment of the Protection System component population, with a minimum segment population of 60 components.
2. Maintain the components in each segment according to the time-based maximum allowable intervals established in Tables 1-1through 1-5 until results of maintenance activities for the segment are available for a minimum of 30 individual components of the segment.
3. Document the maintenance program activities and results for each segment, including maintenance dates and countable events[1] for each included component.
4. Analyze the maintenance program activities and results for each segment to determine the overall performance of the segment and develop maintenance intervals.
5. Determine the maximum allowable maintenance interval for each segment such that the segment experiences countable events on no more than 4% of the components within the segment, for the greater of either the last 30 components maintained or all components maintained in the previous year.

To maintain the technical justification for the ongoing use of a performance-based PSMP:

1. At least annually, update the list of Protection System components and segments and/or description if any changes occur within the segment.
2. Perform maintenance on the greater of 5% of the components (addressed in the performance based PSMP) in each segment or 3 individual components within the segment in each year.
3. For the prior year, analyze the maintenance program activities and results for each segment to determine the overall performance of the segment.
4. If the components in a Protection System segment maintained through a performance-based PSMP experience 4% or more countable events, develop, document, and implement an action plan to reduce the countable events to less than 4% of the segment population within 3 years.
5. Using the prior year's data, determine the maximum allowable maintenance interval for each segment such that the segment experiences countable events on no more than 4% of the components within the segment, for the greater of either the last 30 components maintained or all components maintained in the previous year.

---

[1] ~~Countable events include any failure of a component requiring repair or replacement, any condition discovered during the verification activities in Table 1a through Table 1c which requires corrective action, or a Misoperation attributed to hardware failure or calibration failure.~~

Implementation Plan for PRC-005-02

Standards Involved:

- Approval:
  - PRC-005-2 – Protection System Maintenance and Testing

- Retirements:
  - PRC-005-1 – Transmission and Generation Protection System Maintenance and Testing
  - PRC-008-0 – Implementation and Documentation of Underfrequency Load Shedding
  - Equipment Maintenance Program
  - PRC-011-0 – Undervoltage Load Shedding System Maintenance and Testing
  - PRC-017-0 – Special Protection System Maintenance and Testing

Prerequisite Approvals:

- Revised definition of "Protection System"

Background:

The Implementation Plan reflects consideration of the following:

1. The requirements set forth in the proposed standard establish maximum allowable maintenance intervals for the first time. The established maximum allowable intervals may be shorter than those currently in use by some entities.
2. For entities using longer intervals than the maximum allowable intervals established in the proposed standard, it is unrealistic for those entities to be immediately in compliance with the new intervals. Further, entities should be allowed to become compliant in such a way as to facilitate a continuing maintenance program.
3. Entities that have previously been performing maintenance within the newly specified intervals may not have all the documentation needed to demonstrate compliance with all of the maintenance activities specified.
4. The Implementation Schedule set forth in this document requires that entities develop their revised Protection System Maintenance Program within 12 months following applicable regulatory approvals, or in those jurisdictions where no regulatory approval is required, on the first day of the first calendar quarter twelve months following Board of Trustees adoption.
5. The Implementation Schedule set forth in this document further requires implementation of the revised Protection System Maintenance Program in roughly equally-distributed steps over the maintenance intervals prescribed for each respective maintenance activity in order that entities may implement this standard in a systematic method that facilitates an effective ongoing Protection System Maintenance Program.

General Considerations:

Each Transmission Owner, Generator Owner, and Distribution Provider shall follow the protection system maintenance and testing program it used to perform maintenance and testing to comply with PRC-005-1, PRC-008-0, PRC-011-0, and PRC-017-0 (for the Protection System components identified in PRC-005-2 Tables 1-1 through 1-5) until that Transmission Owner, Generator Owner or Distribution

Provider meets initial compliance for maintenance of the same Protection System component, in accordance with the phasing specified below.

For audits that are conducted during the time period when entities are modifying their existing protection system maintenance and testing programs to become compliant with the maintenance activities and intervals specified in PRC-005-2, each responsible entity must be prepared to identify:

- All of its applicable protection system components.
- For each component, whether maintenance of that component is still being addressed under PRC-005-1 or is being performed according toPRC-005-2.
- Evidence that each component has been maintained under the relevant requirements.

Retirement of Existing Standards:
The existing Standards PRC-005-1, PRC-008-0, PRC-011-0, and PRC-017-0 shall be retired upon regulatory approval of PRC-005-2.

Implementation Plan for Definition:
Protection System Maintenance Program – Entities shall use this definition when implementing any portions of R1, R2 and R3 which use this defined term.

Implementation plan for Requirement R1:

- Entities shall be 100% compliant on the first day of the first calendar quarter twelve months following applicable regulatory approvals, or in those jurisdictions where no regulatory approval is required, on the first day of the first calendar quarter twelve months following Board of Trustees adoption.

Implementation plan for Requirements R2 and R3:

1. For Protection System components with maximum allowable intervals of less than 1 year, as established in Tables 1-1 through 1-5:
    a. The entity shall be 100% compliant on the first day of the first calendar quarter 15 months following applicable regulatory approval, or in those jurisdictions where no regulatory approval is required, on the first day of the first calendar quarter 15 months following Board of Trustees adoption.

2. For Protection System components with maximum allowable intervals 1 year or more, but 2 years or less, as established in Tables 1-1 through 1-5:
    a. The entity shall be 100% compliant on the first day of the first calendar quarter 3 calendar years following applicable regulatory approval, or in those jurisdictions where no regulatory approval is required, on the first day of the first calendar quarter 3 calendar years following Board of Trustees adoption.

3. For Protection System components with maximum allowable intervals of 3 years, as established in Tables 1-1 through 1-5:
    a. The entity shall be at least 30% compliant on the first day of the first calendar quarter 2 calendar years following applicable regulatory approval (or, for generating plants with

scheduled outage intervals exceeding two calendar years, at the conclusion of the first succeeding maintenance outage), or in those jurisdictions where no regulatory approval is required, on the first day of the first calendar quarter 2 calendar years following Board of Trustees adoption.

b. The entity shall be at least 60% compliant on the first day of the first calendar quarter 3 calendar years following applicable regulatory approval, or in those jurisdictions where no regulatory approval is required, on the first day of the first calendar quarter 3 calendar years following Board of Trustees adoption.

c. The entity shall be 100% compliant on the first day of the first calendar quarter 4 calendar years following applicable regulatory approval, or in those jurisdictions where no regulatory approval is required, on the first day of the first calendar quarter 4 calendar years following Board of Trustees adoption.

4. For Protection System components with maximum allowable intervals of 6 years, as established in Tables 1-1 through 1-5:

   a. The entity shall be at least 30% compliant on the first day of the first calendar quarter 3 calendar years following applicable regulatory approval (or, for generating plants with scheduled outage intervals exceeding two calendar years, at the conclusion of the first succeeding maintenance outage), or in those jurisdictions where no regulatory approval is required, on the first day of the first calendar quarter 3 calendar years following Board of Trustees adoption.

   b. The entity shall be at least 60% compliant on the first day of the first calendar quarter 5 calendar years following applicable regulatory approval, or in those jurisdictions where no regulatory approval is required, on the first day of the first calendar quarter 5 calendar years following Board of Trustees adoption.

   c. The entity shall be 100% compliant on the first day of the first calendar quarter 7 calendar years following applicable regulatory approval, or in those jurisdictions where no regulatory approval is required, on the first day of the first calendar quarter 7 calendar years following Board of Trustees adoption.

5. For Protection System components with maximum allowable intervals of 12 years, as established in Tables 1-1 through 1-5 and Table 2:

   a. The entity shall be at least 30% compliant on the first day of the first calendar quarter 5 calendar years following applicable regulatory approval, or in those jurisdictions where no regulatory approval is required, on the first day of the first calendar quarter 5 calendar years following Board of Trustees adoption.

   b. The entity shall be at least 60% compliant on the first day of the first calendar quarter following 9 calendar years following applicable regulatory approval, or in those jurisdictions where no regulatory approval is required, on the first day of the first calendar quarter 9 calendar years following Board of Trustees adoption.

   c. The entity shall be 100% compliant on the first day of the first calendar quarter 13 calendar years following applicable regulatory approval, or in those jurisdictions where no regulatory approval is required, on the first day of the first calendar quarter 13 calendar years following Board of Trustees adoption.

Applicability:
This standard applies to the following functional entities:

- Transmission Owners
- Generator Owners
- Distribution Providers

Implementation Plan for PRC-005-02

Standards Involved:

- Approval:
  - PRC-005-2 – Protection System Maintenance and Testing

- Retirements:
  - PRC-005-1 – Transmission and Generation Protection System Maintenance and Testing
  - PRC-008-0 – Implementation and Documentation of Underfrequency Load Shedding
  - Equipment Maintenance Program
  - PRC-011-0 – Undervoltage Load Shedding System Maintenance and Testing
  - PRC-017-0 – Special Protection System Maintenance and Testing

Prerequisite Approvals:

- Revised definition of "Protection System"

Background:

The Implementation Plan reflects consideration of the following:

1. The requirements set forth in the proposed standard establish maximum allowable maintenance intervals for the first time. The established maximum allowable intervals may be shorter than those currently in use by some entities.
2. For entities using longer intervals than the maximum allowable intervals established in the proposed standard, it is unrealistic for those entities to be immediately in compliance with the new intervals. Further, entities should be allowed to become compliant in such a way as to facilitate a continuing maintenance program.
3. Entities that have previously been performing maintenance within the newly specified intervals may not have all the documentation needed to demonstrate compliance with all of the maintenance activities specified.

4. The Implementation Schedule set forth in this document requires that entities develop their revised Protection System Maintenance Program within 12 months following applicable regulatory approvals, or in those jurisdictions where no regulatory approval is required, on the first day of the first calendar quarter twelve months following Board of Trustees adoption.

~~3.~~5. The Implementation Schedule set forth in this document further requires implementation of the revised Protection System Maintenance Program in roughly equally-distributed steps over the maintenance intervals prescribed for each respective maintenance activity in order that entities may implement this standard in a systematic method that facilitates an effective ongoing Protection System Maintenance Program.

General Considerations:

Each Transmission Owner, Generator Owner, and Distribution Provider shall follow the protection system maintenance and testing program it used to perform maintenance and testing to comply with PRC-005-1, PRC-008-0, PRC-011-0, and PRC-017-0 (for the ~~protection~~ Protection ~~system~~ System components identified in PRC-005-2 Tables 1-1 through 1-5) until that Transmission Owner, Generator Owner or

Distribution Provider meets initial compliance for maintenance of the same ~~protection~~ Protection ~~system~~ System component, in accordance with the phasing specified below.

For audits that are conducted during the time period when entities are modifying their existing protection system maintenance and testing programs to become compliant with the maintenance activities and intervals specified in PRC-005-2, each responsible entity must be prepared to identify:

- All of its applicable protection system components.
- For each component, whether maintenance of that component is still being addressed under PRC-005-1 or is being performed according toPRC-005-2.
- Evidence that each component has been maintained under the relevant requirements.

Retirement of Existing Standards:
The existing Standards PRC-005-1, PRC-008-0, PRC-011-0, and PRC-017-0 shall be retired upon regulatory approval of PRC-005-2.

Implementation Plan for Definition:
Protection System Maintenance Program – Entities shall use this definition when implementing any portions of R1, R2 and~~,~~ R3~~, and R4~~ which use this defined term.

Implementation plan for Requirement R1:

- Entities shall be 100% compliant on the first day of the first calendar quarter twelve months following applicable regulatory approvals, or in those jurisdictions where no regulatory approval is required, on the first day of the first calendar quarter ~~six~~ twelve months following Board of Trustees adoption.

Implementation plan for Requirements R2~~,~~ and R3~~, and R4~~:

1. For Protection System ~~Components~~ components with maximum allowable intervals of less than 1 year, as established in Tables 1-1 through 1-5:
    a. The entity shall be 100% compliant on the first day of the first calendar quarter ~~12~~ 15 months following applicable regulatory approval, or in those jurisdictions where no regulatory approval is required, on the first day of the first calendar quarter ~~12~~ 15 months following Board of Trustees adoption.

2. For Protection System ~~Components~~ components with maximum allowable intervals 1 year or more, but 2 years or less, as established in Tables 1-1 through 1-5:
    a. The entity shall be 100% compliant on the first day of the first calendar quarter ~~2~~ 3 calendar years following applicable regulatory approval, or in those jurisdictions where no regulatory approval is required, on the first day of the first calendar quarter ~~2~~ 3 calendar years following Board of Trustees adoption.

3. For Protection System components with maximum allowable intervals of 3 years, as established in Tables 1-1 through 1-5:
    a. The entity shall be at least 30% compliant on the first day of the first calendar quarter 2 calendar years following applicable regulatory approval (or, for generating plants with

scheduled outage intervals exceeding two calendar years, at the conclusion of the first succeeding maintenance outage), or in those jurisdictions where no regulatory approval is required, on the first day of the first calendar quarter 2 calendar years following Board of Trustees adoption.

b. The entity shall be at least 60% compliant on the first day of the first calendar quarter 3 calendar years following applicable regulatory approval, or in those jurisdictions where no regulatory approval is required, on the first day of the first calendar quarter 3 calendar years following Board of Trustees adoption.

c. The entity shall be 100% compliant on the first day of the first calendar quarter 4 calendar years following applicable regulatory approval, or in those jurisdictions where no regulatory approval is required, on the first day of the first calendar quarter 4 calendar years following Board of Trustees adoption.

~~3.~~4. For Protection System ~~Components~~ components with maximum allowable intervals of 6 years, as established in Tables 1-1 through 1-5:

a. The entity shall be at least 30% compliant on the first day of the first calendar quarter ~~2~~ 3 calendar years following applicable regulatory approval (or, for generating plants with scheduled outage intervals exceeding two calendar years, at the conclusion of the first succeeding maintenance outage), or in those jurisdictions where no regulatory approval is required, on the first day of the first calendar quarter ~~2~~ 3 calendar years following Board of Trustees adoption.

b. The entity shall be at least 60% compliant on the first day of the first calendar quarter ~~4~~ 5 calendar years following applicable regulatory approval, or in those jurisdictions where no regulatory approval is required, on the first day of the first calendar quarter ~~4~~ 5 calendar years following Board of Trustees adoption.

c. The entity shall be 100% compliant on the first day of the first calendar quarter ~~6~~ 7 calendar years following applicable regulatory approval, or in those jurisdictions where no regulatory approval is required, on the first day of the first calendar quarter ~~6~~ 7 calendar years following Board of Trustees adoption.

~~4.~~5. For Protection System ~~Components~~ components with maximum allowable intervals of 12 years, as established in Tables 1-1 through 1-5 and Table 2:

a. The entity shall be at least 30% compliant on the first day of the first calendar quarter ~~4~~ 5 calendar years following applicable regulatory approval, or in those jurisdictions where no regulatory approval is required, on the first day of the first calendar quarter ~~4~~ 5 calendar years following Board of Trustees adoption.

b. The entity shall be at least 60% compliant on the first day of the first calendar quarter following ~~8~~ 9 calendar years following applicable regulatory approval, or in those jurisdictions where no regulatory approval is required, on the first day of the first calendar quarter ~~8~~ 9 calendar years following Board of Trustees adoption.

c. The entity shall be 100% compliant on the first day of the first calendar quarter ~~12~~ 13 calendar years following applicable regulatory approval, or in those jurisdictions where no regulatory approval is required, on the first day of the first calendar quarter ~~12~~ 13 calendar years following Board of Trustees adoption.

Applicability:
This standard applies to the following functional entities:

- Transmission Owners
- Generator Owners
- Distribution Providers

NERC
NORTH AMERICAN ELECTRIC RELIABILITY CORPORATION

Unofficial Comment Form for 4th Draft of PRC-005-2 – Protection System Maintenance [Project 2007-17]

Please **DO NOT** use this form to submit comments on the 4th draft of the standard for Protection System Maintenance and Testing. Comments must be submitted by **May 12, 2011**. If you have questions please contact Al McMeekin at al.mcmeekin@nerc.net or by telephone at 803-530-1963.

http://www.nerc.com/filez/standards/Protection_System_Maintenance_Project_2007-17.html

Background Information:

The Protection System Maintenance and Testing Standard Drafting Team (PSMT SDT) has made substantial changes to the fourth posting of PRC-005-2 based on comments received from industry. The changes include:

- Removal of the requirements from the previous draft that addressed calibration tolerances (R1 part 1.5, R4 part 4.2, and the related Measures and VSLs)
- Removed Requirement R2 (which was redundant to Requirement R1 Part 4) and the related Measure and VSL.
- Removed system-connected station auxiliary transformers from the Applicability of the Standard (4.2.5.5)
- Restructured and revised Table 1-4 addressing station dc supply, including removal of requirements relating to "state of charge".
- Removed the FAQ and incorporated the topics within the Supplementary Reference Document
- Revised the Implementation Plan

The PSMT SDT would like to receive industry comments on this standard.

You do not have to answer all questions. Enter All Comments in Simple Text Format.

Insert a "check" mark in the appropriate boxes by double-clicking the gray areas.

1. The SDT has restructured the Table for Station DC Supply, separating it into six sub-tables individually addressing the various different technologies. Do you agree that the restructured tables provide more clarity? If not, please provide specific suggestions for improvement.

   ☐ Yes
   ☐ No
   Comments:

2. The SDT has modified the Implementation Periods within the Implementation Plan.. Do you agree with the changes? If not, please provide specific suggestions for improvement.

   ☐ Yes
   ☐ No
   Comments:

3. The SDT has modified the VSLs, VRFs and Time Horizons with this posting. Do you agree with the changes? If not, please provide specific suggestions for improvement.

   ☐ Yes
   ☐ No
   Comments:

4. The SDT has incorporated the FAQ document into the "Supplementary Reference" document and has provided the combined document as support for the Requirements within the standard. Do you have any specific suggestions for further improvements?

   ☐ Yes
   ☐ No
   Comments:

5. If you have any other comments on this Standard that you have not already provided in response to the prior questions, please provide them here.

   Comments:

NERC

NORTH AMERICAN ELECTRIC RELIABILITY CORPORATION

PRC-005-2 Protection System Maintenance

Supplementary Reference & FAQ

Draft

April 12, 2011

Prepared by the

Protection System Maintenance and Testing Standard Drafting Team

116-390 Village Blvd., Princeton, NJ 08540
609.452.8060 | 609.452.9550 fax
www.nerc.com

Table of Contents

1. Introduction and Summary 4
2. Need for Verifying Protection System Performance 5
2.1 Existing NERC Standards for Protection System Maintenance and Testing 5
2.2 Protection System Definition 6
2.3 Applicability of New Protection System Maintenance Standards 6
2.3.1 Frequently Asked Questions: 7
2.4 Applicable Relays 8
2.4.1 Frequently Asked Questions: 8
3. Protection Systems Product Generations 10
4. Definitions 11
4.1 Frequently Asked Questions: 11
5. Time-Based Maintenance (TBM) Programs 13
5.1 Maintenance Practices 13
5.1.1 Frequently Asked Questions: 15
5.2 Extending Time-Based Maintenance 16
5.2.1 Frequently Asked Question: 17
6. Condition-Based Maintenance (CBM) Programs 18
6.1 Frequently Asked Questions: 19
7. Time-Based Versus Condition-Based Maintenance 20
7.1 Frequently Asked Questions: 20
8. Maximum Allowable Verification Intervals 25
8.1 Maintenance Tests 25
8.1.1 Table of Maximum Allowable Verification Intervals 25
8.1.2 Additional Notes for Tables 1-1 through 1-5 27
8.1.3 Frequently Asked Questions: 28
8.2 Retention of Records 32
8.2.1 Frequently Asked Questions: 33
8.3 Basis for Table 1 Intervals 35
8.4 Basis for Extended Maintenance Intervals for Microprocessor Relays 36
9. Performance-Based Maintenance Process 38
9.1 Minimum Sample Size 39
9.2 Frequently Asked Questions: 41
10. Overlapping the Verification of Sections of the Protection System 47

10.1 Frequently Asked Question: 47
11. Monitoring by Analysis of Fault Records 48
11.1 Frequently Asked Question: 49
12. Importance of Relay Settings in Maintenance Programs 50
12.1 Frequently Asked Questions: 50
13. Self-Monitoring Capabilities and Limitations 53
13.1 Frequently Asked Question: 54
14. Notification of Protection System Failures 55
15. Maintenance Activities 56
15.1 Protective Relays (Table 1-1) 56
15.1.1 Frequently Asked Question: 56
15.2 Voltage & Current Sensing Devices (Table 1-3) 56
15.2.1 Frequently Asked Questions: 58
15.3 Control circuitry associated with protective functions (Table 1-5) 59
15.3.1 Frequently Asked Questions: 61
15.4.1 Frequently Asked Questions: 62
15.5 Associated communications equipment (Table 1-2) 74
15.5.1 Frequently Asked Questions: 74
15.6 Alarms (Table 2) 77
15.6.1 Frequently Asked Question: 77
15.7 Examples of Evidence of Compliance 78
15.7.1 Frequently Asked Questions: 78
Figures 81
Figure 1: Typical Transmission System 81
Figure 2: Typical Generation System 82
Appendix B — Protection System Maintenance Standard Drafting Team 87

This supplementary reference to PRC-005-2 is not mandatory and enforceable.

1. Introduction and Summary

NERC currently has four Reliability Standards that are mandatory and enforceable in the United States and address various aspects of maintenance and testing of Protection and Control systems. These standards are:

PRC-005-1 — *Transmission and Generation Protection System Maintenance and Testing*

PRC-008-0 — *Underfrequency Load Shedding Equipment Maintenance Programs*

PRC-011-0 — *UVLS System Maintenance and Testing*

PRC-017-0 — *Special Protection System Maintenance and Testing*

While these standards require that applicable entities have a maintenance program for Protection Systems, and that these entities must be able to demonstrate they are carrying out such a program, there are no specifics regarding the technical requirements for Protection System maintenance programs. Furthermore, FERC Order 693 directed additional modifications respective to Protection System maintenance programs. PRC-005-2 combines and replaces PRC-005, PRC-008, PRC-011 and PRC-017.

2. Need for Verifying Protection System Performance

Protective relays have been described as silent sentinels, and do not generally demonstrate their performance until a fault or other power system problem requires that they operate to protect power system elements, or even the entire Bulk Electric System (BES). Lacking faults, switching operations or system problems, the Protection Systems may not operate, beyond static operation, for extended periods. A misoperation - a false operation of a Protection System or a failure of the Protection System to operate, as designed, when needed - can result in equipment damage, personnel hazards, and wide area disturbances or unnecessary customer outages. Maintenance or testing programs are used to determine the performance and availability of Protection Systems.

Typically, utilities have tested Protection Systems at fixed time intervals, unless they had some incidental evidence that a particular Protection System was not behaving as expected. Testing practices vary widely across the industry. Testing has included system functionality, calibration of measuring devices, and correctness of settings. Typically, a Protection System must be visited at its installation site and, in many cases, removed from service for this testing.

Fundamentally, a Reliability Standard for Protection System Maintenance and Testing requires the performance of the maintenance activities that are necessary to detect and correct plausible age and service related degradation of the Protection System components such that a properly built and commissioned Protection System will continue to function as designed over its service life.

Similarly station batteries which are an important part of the station dc supply are not called upon to provide instantaneous dc power to the Protection System until power is required by the Protection System to operate circuit breakers or interrupting devices to clear faults or to isolate equipment.

2.1 Existing NERC Standards for Protection System Maintenance and Testing

For critical BES protection functions, NERC Standards have required that each utility or asset owner define a testing program. The starting point is the existing Standard PRC-005, briefly restated as follows:

Purpose: To ensure all transmission and generation Protection Systems affecting the reliability of the Bulk Electric System (BES) are maintained and tested.

PRC-005-1 is not specific on where the boundaries of the Protection Systems lie. However, the definition of Protection System in the NERC Glossary of Terms used in Reliability Standards indicates what must be included as a minimum.

At the beginning of the project to develop PRC-005-2, the definition of Protection System was:

Protective relays, associated communications systems, voltage and current sensing devices, station batteries and dc control circuitry.

Applicability: Owners of generation and transmission Protection Systems.

Requirements: The owner shall have a documented maintenance program with test intervals. The owner must keep records showing that the maintenance was performed at the specified intervals.

2.2 Protection System Definition

The most recently approved definition of Protection Systems is:

- Protective relays which respond to electrical quantities,
- communications systems necessary for correct operation of protective functions,
- voltage and current sensing devices providing inputs to protective relays,
- station dc supply associated with protective functions (including station batteries, battery chargers, and non-battery-based dc supply), and
- control circuitry associated with protective functions through the trip coil(s) of the circuit breakers or other interrupting devices.

2.3 Applicability of New Protection System Maintenance Standards

The BES purpose is to transfer bulk power. The applicability language has been changed from the original PRC-005:

"*...affecting the reliability of the Bulk Electric System (BES)…*"

To the present language:

"*… and that are designed to provide protection for the BES.*"

The drafting team intends that this Standard will follow with any definition of the Bulk Electric System. There should be no ambiguity; if the element is a BES element then the Protection System protecting that element should then be included within this Standard. If there is regional variation to the definition then there will be a corresponding regional variation to the Protection Systems that fall under this Standard.

There is no way for the Standard Drafting Team to know whether a specific 230KV line, 115KV line (even 69KV line), for example, should be included or excluded. Therefore, the team set the clear intent that the Standard language should simply be applicable to relays for BES elements.

The BES is a NERC defined term that, from time to time, may undergo revisions. Additionally, there may even be regional variations that are allowed in the present and future definitions. See the NERC glossary of terms for the present, in-force, definition. See the applicable regional reliability organization for any applicable allowed variations.

While this Standard will undergo revisions in the future, this Standard will not attempt to keep up with revisions to the NERC definition of BES but rather simply make BES Protection Systems applicable.

The Standard is applied to Generator Owners (GO) and Transmission Owners (TO) because GO's and TO's have equipment that is BES equipment. The Standard brings in Distribution

Providers (DP) because depending on the station configuration of a particular substation, there may be Protection System equipment installed at a non-transmission voltage level (Distribution Provider equipment) that is wholly or partially installed to protect the BES. PRC-005-2 would apply to this equipment. An example is underfrequency load-shedding, which is frequently applied well down into the distribution system to meet PRC-007-0.

As this Standard is intended to replace the existing PRC-005, PRC-008, PRC-011 and PRC-017, those Standards are used in the construction of this revision of PRC-005-1. Much of the original intent of those Standards was carried forward whenever it was possible to continue the intent without a disagreement with FERC Order 693. For example the original PRC-008 was constructed quite differently than the original PRC-005. The drafting team agrees with the intent of this and notes that distributed tripping schemes would have to exhibit multiple failures to trip before they would prove to be significant as opposed to a single failure to trip of, for example, a Transmission Protection System Bus Differential Lock-Out Relay. While many failures of these distribution breakers could add up to be significant, it is also believed that distribution breakers are operated often on just fault clearing duty and therefore the distribution circuit breakers are operated at least as frequently as any requirements that might have appeared in this Standard.

Additionally, since this Standard will now replace PRC-011 it will be important to make the distinction between under-voltage Protection Systems that protect individual loads and Protection Systems that are UVLS schemes that protect the BES. Any UVLS scheme that had been applicable under PRC-011 will now be applicable under this revision of PRC-005-1. An example of an Under-Voltage Load Shedding scheme that is not applicable to this Standard is one in which the tripping action was intended to prevent low distribution voltage to a specific load from a transmission system that was intact except for the line that was out of service, as opposed to preventing a cascading outage or transmission system collapse.

It had been correctly noted that the devices needed for PRC-011 are the very same types of devices needed in PRC-005.

Thus a Standard written for Protection Systems of the BES can easily make the needed requirements for Protection Systems and replace some other Standards at the same time.

2.3.1 Frequently Asked Questions:

What, exactly, is the BES, or Bulk Electric System?
BES is the abbreviation for Bulk Electric System. BES is a term in the Glossary of Terms used in Reliability Standards, and is not being modified within this draft Standard.
NERC's approved definition of Bulk Electric System is:

As defined by the Regional Reliability Organization, the electrical generation resources, transmission lines, interconnections with neighboring systems, and associated equipment, generally operated at voltages of 100 kV or higher. Radial transmission facilities serving only load with one transmission source are generally not included in this definition.

Each Regional Entity implements a definition of the Bulk Electric System that is based on this NERC definition, in some cases, supplemented by additional criteria. These regional definitions have been documented and provided to FERC as part of a *June 16, 2007 Informational Filing*.

Why is Distribution Provider included within the Applicable Entities and as a responsible entity within several of the requirements? Wouldn't anyone having relevant facilities be a Transmission Owner?
Depending on the station configuration of a particular substation, there may be Protection System equipment installed at a non-transmission voltage level (Distribution Provider equipment) that is wholly or partially installed to protect the BES. PRC-005-2 would apply to this equipment. An example is underfrequency load-shedding, which is frequently applied well down into the distribution system to meet PRC-007-0.

We have an Under Voltage Load Shedding (UVLS) system in place that prevents one of our distribution substations from supplying extremely low voltage in the case of a specific transmission line outage. The transmission line is part of the BES. Does this mean that our UVLS system falls within this Standard?
The situation as stated indicates that the tripping action was intended to prevent low distribution voltage to a specific load from a transmission system that was intact except for the line that was out of service, as opposed to preventing cascading outage or transmission system collapse. This Standard is not applicable to this UVLS.

We have a UFLS scheme that sheds the necessary load through distribution-side circuit breakers and circuit reclosers. Do the trip-test requirements for circuit breakers apply to our situation?
No. Distributed tripping schemes would have to exhibit multiple failures to trip before they would prove to be significant as opposed to a single failure to trip of, for example, a Transmission Protection System Bus Differential Lock-Out Relay. While many failures of these distribution breakers could add up to be significant, it is also believed that distribution breakers are operated often on just fault clearing duty and therefore the distribution circuit breakers are operated at least as frequently as any requirements that might have appeared in this Standard.

2.4 Applicable Relays

The NERC Glossary definition has a Protection System including relays, dc supply, current and voltage sensing devices, dc control circuitry and associated communications circuits. The relays to which this Standard applies are those protective relays that respond to electrical quantities and provide a trip output to trip coils, dc control circuitry or associated communications equipment. This definition extends to IEEE device # 86 (lockout relay) and IEEE device # 94 (tripping or trip-free relay) as these devices are tripping relays that respond to the trip signal of the protective relay that processed the signals from the current and voltage sensing devices.

Relays that respond to non-electrical inputs or impulses (such as, but not limited to, vibration, pressure, seismic, thermal or gas accumulation) are not included.

2.4.1 Frequently Asked Questions:

Are power circuit reclosers, reclosing relays, closing circuits and auto-restoration schemes covered in this Standard?

No. As stated in Requirement R1, this Standard covers protective relays that use measurements of electrical quantities to determine anomalies and to trip a portion of the BES. Reclosers, reclosing relays, closing circuits and auto-restoration schemes are used to cause devices to close as opposed to electrical-measurement relays and their associated circuits that cause circuit interruption from the BES; such closing devices and schemes are more appropriately covered under other NERC Standards. There is one notable exception: if a Special Protection System incorporates automatic closing of breakers, the related closing devices are part of the SPS and must be tested accordingly.

I use my protective relays only as sources of metered quantities and breaker status for SCADA and EMS through a substation distributed RTU or data concentrator to the control center. What are the maintenance requirements for the relays?

This Standard addresses only devices "that are applied on, or are designed to provide protection for the BES." Protective relays, providing only the functions mentioned in the question, are not included.

Is a Sudden Pressure Relay an Auxiliary Tripping Relay?

No. IEEE C37.2-2008 assigns the device number 94 to auxiliary tripping relays. Sudden pressure relays are assigned device number 63. Sudden pressure relays are excluded from the Standard because it does not utilize voltage and/or current measurements to determine anomalies. Devices that use anything other than electrical detection means are excluded.

My mechanical device does not operate electrically and does not have calibration settings; what maintenance activities apply?

You must conduct a test(s) to verify the integrity of the trip circuit. This Standard does not cover circuit breaker maintenance or transformer maintenance. The Standard also does not cover testing of devices such as sudden pressure relays (63), temperature relays (49), and other relays which respond to mechanical parameters rather than electrical parameters.

The Standard specifically mentions Auxiliary and Lock-out relays; what is an Auxiliary Tripping Relay?

An auxiliary relay, IEEE Device Number 94, is described in IEEE Standard C37.2-2008 as "A device that functions to trip a circuit breaker, contactor, or equipment; to permit immediate tripping by other devices; or to prevent immediate reclosing of a circuit interrupter if it should open automatically, even though its closing circuit is maintained closed."

What is a Lock-out Relay?

A lock-out relay, IEEE Device Number 86, is described in IEEE Standard C37.2 as "A device that trips and maintains the associated equipment or devices inoperative until it is reset by an operator, either locally or remotely."

3. Protection Systems Product Generations

The likelihood of failure and the ability to observe the operational state of a critical Protection System, both depends on the technological generation of the relays as well as how long they have been in service. Unlike many other transmission asset groups, protection and control systems have seen dramatic technological changes spanning several generations. During the past 20 years, major functional advances are primarily due to the introduction of microprocessor technology for power system devices such as primary measuring relays, monitoring devices, control systems, and telecommunications equipment.

Modern microprocessor based relays have six significant traits that impact a maintenance strategy:

- Self monitoring capability - the processors can check themselves, peripheral circuits, and some connected substation inputs and outputs such as trip coil continuity. Most relay users are aware that these relays have self monitoring, but are not focusing on exactly what internal functions are actually being monitored. As explained further below, every element critical to the Protection System must be monitored, or else verified periodically.
- Ability to capture fault records showing how the Protection System responded to a fault in its zone of protection, or to a nearby fault for which it is required not to operate.
- Ability to meter currents and voltages, as well as status of connected circuit breakers, continuously during non-fault times. The relays can compute values such as MW and MVAR line flows that are sometimes used for operational purposes such as SCADA.
- Data communications via ports that provide remote access to all of the results of Protection System monitoring, recording, and measurement.
- Ability to trip or close circuit breakers and switches through the Protection System outputs, on command from remote data communications messages or from relay front panel button requests.
- Construction from electronic components some of which have shorter technical life or service life than electromechanical components of prior Protection System generations.

There have been significant advances in the technology behind the other components of Protection Systems. Microprocessors are now a part of Battery Chargers, Associated Communications Equipment, Voltage and Current Measuring Devices and even the control circuitry (in the form of software-latches replacing lock-out relays, etc).

Any Protection System component can have self-monitoring and alarming capability, not just relays. Because of this technology, extended time intervals can find their way into all components of the Protection System.

4. Definitions

Protection System Maintenance Program (PSMP) — An ongoing program by which Protection System components are kept in working order and proper operation of malfunctioning components is restored. A maintenance program for a specific component includes one or more of the following activities:

- Verify — Determine that the component is functioning correctly.
- Monitor — Observe the routine in-service operation of the component.
- Test — Apply signals to a component to observe functional performance or output behavior, or to diagnose problems.
- Inspect — Detect visible signs of component failure, reduced performance and degradation.
- Calibrate — Adjust the operating threshold or measurement accuracy of a measuring element to meet the intended performance requirement.
- Restore — Return malfunctioning components to proper operation.

4.1 Frequently Asked Questions:

Why does PRC-005-2 not specifically require maintenance and testing procedures as reflected in the previous Standard, PRC-005-1?
PRC-005-1 does not require detailed maintenance and testing procedures, but instead requires summaries of such procedures, and is not clear on what is actually required. PRC-005-2 requires a documented maintenance program, and is focused on establishing requirements rather than prescribing methodology to meet those requirements. Between the activities identified in the tables 1-1 through 1-5 and Table 2 (collectively the "Tables"), and the various components of the definition established for a "Protection System Maintenance Program", PRC-005-2 establishes the activities and time-basis for a Protection System Maintenance Program to a level of detail not previously required.

Please clarify what is meant by restore in the definition of maintenance.
The description of "Restore" in the definition of a Protection System Maintenance Program, addresses corrective activities necessary to assure that the component is returned to working order following the discovery of its failure or malfunction. The Maintenance Activities specified in the Tables do not present any requirements related to Restoration; R3 of the Standard does require that the entity "initiate resolution of any identified maintenance correctable issues". Some examples of restoration (or correction of maintenance-correctable issues) include, but are not limited to, replacement of capacitors in distance relays to bring them to working order; replacement of relays, or other Protection System components, to bring the Protection System to working order; upgrade of electro-mechanical or solid-state protective relays to micro-processor based relays following the discovery of failed components. Restoration, as used in this context is not to be confused with Restoration rules as used in system operations. Maintenance activity necessarily includes both the detection of problems and the repairs needed to eliminate those problems. This Standard does not identify all of the Protection System problems that must be

detected and eliminated, rather it is the intent of this Standard that an entity determines the necessary working order for their various devices and keeps them in working order. If an equipment item is repaired or replaced then the entity can restart the maintenance-time-interval-clock if desired, however the replacement of equipment does not remove any documentation requirements that would have been required to verify compliance with time-interval requirements; in other words do not discard maintenance data that goes to verify your work.

The retention of documentation for new and/or replaced equipment is all about proving that the maintenance intervals had been in compliance. For example, a long range plan of upgrades might lead an entity to ignore required maintenance; retaining the evidence of prior maintenance that existed before any retirements and upgrades proves compliance with the Standard.

5. Time-Based Maintenance (TBM) Programs

Time-based maintenance is the process in which Protection Systems are maintained or verified according to a time schedule. The scheduled program often calls for technicians to travel to the physical site and perform a functional test on Protection System components. However, some components of a TBM program may be conducted from a remote location - for example, tripping a circuit breaker by communicating a trip command to a microprocessor relay to determine if the entire Protection System tripping chain is able to operate the breaker. Similarly, all Protection System components can have the ability to remotely conduct tests, either on-command or routinely, the running of these tests can extend the time interval between hands-on maintenance activities.

5.1 Maintenance Practices

Maintenance and testing programs often incorporate the following types of maintenance practices:

- TBM – time-based maintenance – externally prescribed maximum maintenance or testing intervals are applied for components or groups of components. The intervals may have been developed from prior experience or manufacturers' recommendations. The TBM verification interval is based on a variety of factors, including experience of the particular asset owner, collective experiences of several asset owners who are members of a country or regional council, etc. The maintenance intervals are fixed, and may range in number of months or in years.

  TBM can include review of recent power system events near the particular terminal. Operating records may verify that some portion of the Protection System has operated correctly since the last test occurred. If specific protection scheme components have demonstrated correct performance within specifications, the maintenance test time clock can be reset for those components.

- PBM – performance-based maintenance - intervals are established based on analytical or historical results of TBM failure rates on a statistically significant population of similar components. Some level of TBM is generally followed. Statistical analyses accompanied by adjustments to maintenance intervals are used to justify continued use of PBM-developed extended intervals when test failures or in-service failures occur infrequently.

- CBM – condition-based maintenance – continuously or frequently reported results from non-disruptive self monitoring of components demonstrate operational status as those components remain in service. Whatever is verified by CBM does not require manual testing, but taking advantage of this requires precise technical focus on exactly what parts are included as part of the self diagnostics. While the term "Condition-Based-Maintenance" (CBM) is no longer used within the Standard itself, it is important to note that the concepts of CBM are a part of the Standard (in the form of extended time intervals through status-monitoring). These extended time intervals are only allowed (in

the absence of PBM) if the condition of the device is monitored (CBM). As a consequence of the "monitored-basis-time-intervals" existing within the Standard the explanatory discussions within this Supplementary Reference concerned with CBM will remain in this reference and are discussed as CBM.

Microprocessor based Protection System components that perform continuous self-monitoring verify correct operation of most components within the device. Self-monitoring capabilities may include battery continuity, float voltages, unintentional grounds, the ac signal inputs to a relay, analog measuring circuits, processors and memory for measurement, protection, and data communications, trip circuit monitoring, and protection or data communications signals (and many, many more measurements). For those conditions, failure of a self-monitoring routine generates an alarm and may inhibit operation to avoid false trips. When internal components, such as critical output relay contacts, are not equipped with self-monitoring, they can be manually tested. The method of testing may be local or remote, or through inherent performance of the scheme during a system event.

The TBM is the overarching maintenance process of which the other types are subsets. Unlike TBM, PBM intervals are adjusted based on good or bad experiences. The CBM verification intervals can be hours or even milliseconds between non-disruptive self monitoring checks within or around components as they remain in service.

TBM, PBM, and CBM can be combined for individual components, or within a complete Protection System. The following diagram illustrates the relationship between various types of maintenance practices described in this section. In the Venn diagram the overlapping regions show the relationship of TBM with PBM historical information and the inherent continuous monitoring offered through CBM.

This figure shows:

- Region 1: The TBM intervals that are increased based on known reported operational condition of individual components that are monitoring themselves.
- Region 2: The TBM intervals that are adjusted up or down based on results of analysis of maintenance history of statistically significant population of similar products that have been subject to TBM.
- Region 3: Optimal TBM intervals based on regions 1 and 2.

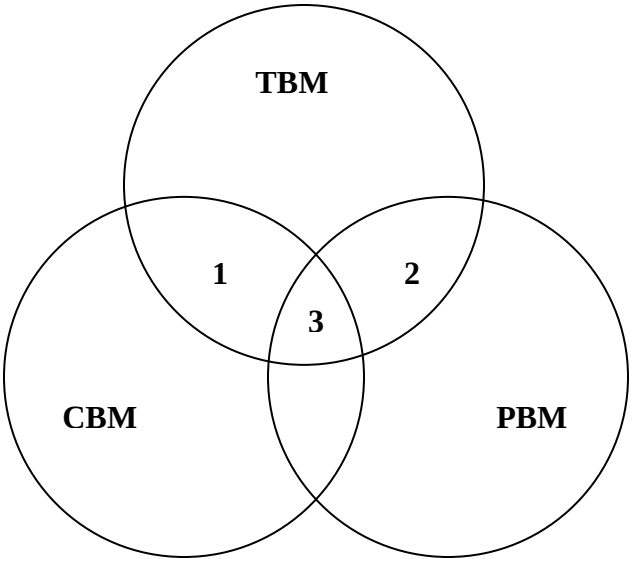

Relationship of time-based maintenance types

5.1.1 Frequently Asked Questions:

The Standard seems very complicated, and is difficult to understand. Can it be simplified?

Because the Standard is establishing parameters for condition-based Maintenance (R1) and performance-based Maintenance (R2) in addition to simple time-based Maintenance, it does appear to be complicated. At its simplest, an entity needs to ONLY perform time-based maintenance according to the unmonitored rows of the Tables. If an entity then wishes to take advantage of monitoring on its Protection System components and its available lengthened time intervals then it may, as long as the component has the listed monitoring attributes. If an entity wishes to use historical performance of its Protection System components to perform performance-based Maintenance, then R2 applies.

Please see the following diagram, which provides a “flow chart” of the Standard.

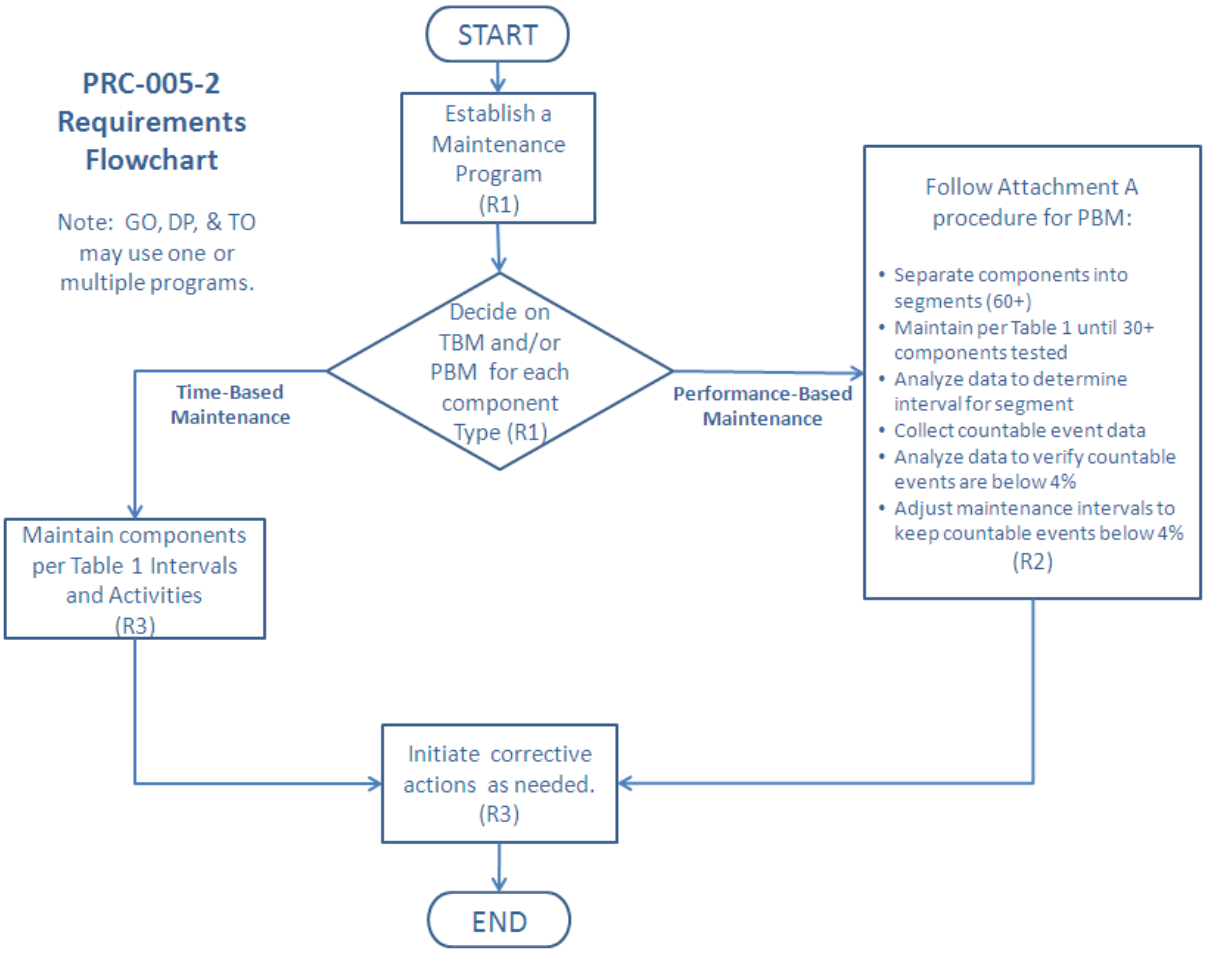

We have an electromechanical (unmonitored) relay that has a trip output to a lockout relay (unmonitored) which trips our transformer off-line by tripping the transformer's high-side and low-side circuit breakers. What testing must be done for this system?
This system is made up of components that are all unmonitored. Assuming a time-based protection system maintenance program schedule (as opposed to a performance-based maintenance program), each component must be maintained per the most frequent hands-on activities listed in the Tables 1-1 through 1-5.

5.2 Extending Time-Based Maintenance

All maintenance is fundamentally time-based. Default time-based intervals are commonly established to assure proper functioning of each component of the Protection System, when data on the reliability of the components is not available other than observations from time-based maintenance. The following factors may influence the established default intervals:

- If continuous indication of the functional condition of a component is available (from relays or chargers or any self monitoring device), then the intervals may be extended or manual testing may be eliminated. This is referred to as condition-based maintenance or CBM. CBM is valid only for precisely the components subject to monitoring. In the case

of microprocessor-based relays, self-monitoring may not include automated diagnostics of every component within a microprocessor.

- Previous maintenance history for a group of components of a common type may indicate that the maintenance intervals can be extended while still achieving the desired level of performance. This is referred to as performance-based maintenance or PBM. It is also sometimes referred to as reliability-centered maintenance or RCM, but PBM is used in this document.
- Observed proper operation of a component may be regarded as a maintenance verification of the respective component or element in a microprocessor-based device. For such an observation, the maintenance interval may be reset only to the degree that can be verified by data available on the operation. For example, the trip of an electromechanical relay for a fault verifies the trip contact and trip path, but only through the relays in series that actually operated; one operation of this relay cannot verify correct calibration.

Excessive maintenance can actually decrease the reliability of the component or system. It is not unusual to cause failure of a component by removing it from service and restoring it. The improper application of test signals may cause failure of a component. For example, in electromechanical overcurrent relays, test currents have been known to destroy convolution springs.

In addition, maintenance usually takes the component out of service, during which time it is not able to perform its function. Cutout switch failures, or failure to restore switch position, commonly lead to protection failures.

5.2.1 Frequently Asked Question:

If I show the protective device out of service while it is being repaired then can I add it back as a new protective device when it returns? If not, my relay testing history would show that I was out of compliance for the last maintenance cycle.

The maintenance and testing requirements (R3) (in essence) state "…shall implement and follow its PSMP …" if not then actions must be initiated to correct the deviance. The type of corrective activity is not stated; however it could include repairs or replacements.

Your documentation requirements will increase, of course, to demonstrate that your device tested bad and had corrective actions initiated. Your regional entity could very well ask for documentation showing status of your corrective actions.

6. Condition-Based Maintenance (CBM) Programs

Condition-based maintenance is the process of gathering and monitoring the information available from modern microprocessor-based relays and other intelligent electronic devices (IEDs) that monitor Protection System elements. These devices generate monitoring information during normal operation, and the information can be assessed at a convenient location remote from the substation. The information from these relays and IEDs is divided into two basic types:

1. Information can come from background self-monitoring processes, programmed by the manufacturer, or by the user in device logic settings. The results are presented by alarm contacts or points, front panel indications, and by data communications messages.
2. Information can come from event logs, captured files, and/or oscillographic records for faults and disturbances, metered values, and binary input status reports. Some of these are available on the device front panel display, but may be available via data communications ports. Large files of fault information can only be retrieved via data communications. These results comprise a mass of data that must be further analyzed for evidence of the operational condition of the Protection System.

Using these two types of information, the user can develop an effective maintenance program carried out mostly from a central location remote from the substation. This approach offers the following advantages:

1. Non-invasive Maintenance: The system is kept in its normal operating state, without human intervention for checking. This reduces risk of damage, or risk of leaving the system in an inoperable state after a manual test. Experience has shown that keeping human hands away from equipment known to be working correctly enhances reliability.
2. Virtually Continuous Monitoring: CBM will report many hardware failure problems for repair within seconds or minutes of when they happen. This reduces the percentage of problems that are discovered through incorrect relaying performance. By contrast, a hardware failure discovered by TBM may have been there for much of the time interval between tests, and there is a good chance that some devices will show health problems by incorrect operation before being caught in the next test round. The frequent or continuous nature of CBM makes the effective verification interval far shorter than any required TBM maximum interval.

6.1 Frequently Asked Questions:

My microprocessor relays and dc circuit alarms are contained on relay panels in a 24-hour attended control room. Does this qualify as an extended time interval condition-based system?
Yes, provided the station attendant (plant operator, etc.) monitors the alarms and other indications (comparable to the monitoring attributes) and reports them within the given time limits that are stated in the criteria of the Tables.

When documenting the basis for inclusion of components into the appropriate levels of monitoring as per Requirement R1.4 of the Standard, is it necessary to provide this documentation about the device by listing of every component and the specific monitoring attributes of each device?
No. While maintaining this documentation on the device level would certainly be permissible, it is not necessary. Global statements can be made to document appropriate levels of monitoring for the entire population of a component type or portion thereof.

For example, it would be permissible to document the conclusion that all BES substation dc supply battery chargers are Monitored by stating the following within the program description:

> "All substation dc supply battery chargers are considered Monitored and subject to the rows for monitored equipment of Table 1-4 requirements as all substation dc supply battery chargers are equipped with dc voltage alarms and ground detection alarms that are sent to the manned control center."

Similarly, it would be acceptable to use a combination of a global statement and a device level list of exclusions. Example:

> "Except as noted below, all substation dc supply battery chargers are considered Monitored and subject to the rows for monitored equipment of Table 1-4 requirements as all substation dc supply battery chargers are equipped with dc voltage alarms and ground detection alarms that are sent to the manned control center. The dc supply battery chargers of Substation X, Substation Y, and Substation Z are considered Unmonitored and subject to the rows for unmonitored equipment in Table 1-4 requirements as they are not equipped with ground detection capability."

Regardless whether this documentation is provided by device listing of monitoring attributes, by global statements of the monitoring attributes of an entire population of component types, or by some combination of these methods, it should be noted that auditors may request supporting drawings or other documentation necessary to validate the inclusion of the device(s) within the appropriate level of monitoring. This supporting background information need not be maintained within the program document structure but should be retrievable if requested by an auditor.

7. Time-Based Versus Condition-Based Maintenance

Time-based and condition-based maintenance programs are both acceptable, if implemented according to technically sound requirements. Practical programs can employ a *combination of time-based and condition-based maintenance.* The Standard requirements introduce the concept of optionally using condition monitoring as a documented element of a maintenance program.

The Federal Energy Regulatory Commission (FERC), in its Order Number 693 Final Rule dated March 16, 2007 (18 CFR Part 40, Docket No. RM06-16-000) on Mandatory Reliability Standards for the Bulk-Power System, directed NERC to submit a modification to PRC-005-1 that includes a requirement that maintenance and testing of a protection system must be carried out within a maximum allowable interval that is appropriate to the type of the protection system and its impact on the reliability of the Bulk Power System. Accordingly, this Supplementary Reference Paper refers to the specific maximum allowable intervals in PRC-005-2. The defined time limits allow for longer time intervals if the maintained component is monitored.

A key feature of condition-based monitoring is that it effectively reduces the time delay between the moment of a protection failure and time the protection system owner knows about it, for the monitored segments of the protection system. In some cases, the verification is practically continuous - the time interval between verifications is minutes or seconds. Thus, technically sound, condition-based verification, meets the verification requirements of the FERC order even more effectively than the strictly time-based tests of the same system components.

The result is that:

This NERC Standard permits utilities to use a technically sound approach and to take advantage of remote monitoring, data analysis, and control capabilities of modern protection systems to reduce the need for periodic site visits and invasive testing of components by on-site technicians. This periodic testing must be conducted within the maximum time intervals specified in Tables 1-1 through 1-5 and Table 2 of PRC-005-2.

7.1 Frequently Asked Questions:

Please provide an example of the unmonitored versus other levels of monitoring available?
An unmonitored Protection System has no monitoring and alarm circuits on the Protection System components. A Protection System component that has monitoring attributes but no alarm output connected is considered to be un-monitored.

A monitored Protection System or an individual monitored component of a Protection System has monitoring and alarm circuits on the Protection System components. The alarm circuits must alert, within 24 hours, a location wherein corrective action can be initiated. This location might be, but not limited to an Operations Center, Dispatch Office, Maintenance Center or even a portable SCADA system.

There can be a combination of monitored and unmonitored Protection Systems within any given scheme, substation or plant; there can also be a combination of monitored and unmonitored components within any given Protection System.

Example #1: A combination of monitored and unmonitored components within a given Protection System might be:

- A microprocessor relay with an internal alarm connected to SCADA to alert 24-hr staffed operations center; it has internal self diagnosis and alarming. (monitored)
- Instrumentation transformers, with no monitoring, connected as inputs to that relay. (unmonitored)
- A vented lead-acid battery with a low voltage alarm for the station dc supply voltage and an unintentional grounds detection alarm connected to SCADA. (monitoring varies)
- A circuit breaker with a trip coil and the trip circuit is not monitored. (unmonitored)

Given the particular components and conditions, and using the Table 1 ("Maximum Allowable Testing Intervals and Maintenance Activities") and Table 2 ("Alarming Paths and Monitoring"), the particular components have maximum activity intervals of:

Every 3 calendar months, verify:

- Electrolyte level (station dc supply voltage and unintentional ground detection is being maintained more frequently by the monitoring system).

Every 18 calendar months, verify/inspect the following:

- Battery bank ohmic values to station battery baseline (if performance tests are not opted)
- Battery charger float voltage
- Battery rack integrity
- Cell condition of all individual battery cells (where visible)
- Battery continuity
- Battery terminal connection resistance
- Battery cell-to-cell resistance (where available to measure)

Every 6 calendar years, perform/verify the following:

- Battery performance test (if ohmic tests are not opted)
- Verify that each trip coil is able to operate the circuit breaker, interrupting device, or mitigating device
- For electro-mechanical lock-out relays and auxiliary relays, electrical operation of electromechanical trip and auxiliary devices

Every 12 calendar years, verify the following:

- Microprocessor relay settings are as specified

- Operation of the microprocessor's relay inputs and outputs that are essential to proper functioning of the Protection System
- Acceptable measurement of power system input values seen by the microprocessor protective relay
- Instrumentation transformers
- Protection system component monitoring for the battery system signals are conveyed to a location where corrective action can be initiated
- The microprocessor relay alarm signals are conveyed to a location where corrective action can be initiated
- Verify all paths of the control and trip circuits

Example #2: A combination of monitored and unmonitored components within a given Protection System might be:

- A microprocessor relay with integral alarm that is not connected to SCADA. (unmonitored)
- Instrument transformers, with no monitoring, connected as inputs to that relay. (unmonitored)
- A vented lead-acid battery with a low voltage alarm for the station dc supply voltage and an unintentional grounds detection alarm connected to SCADA. (monitoring varies)
- A circuit breaker with a trip coil, with no circuits monitored. (unmonitored)

Given the particular components and conditions, and using the Table 1 ("Maximum Allowable Testing Intervals and Maintenance Activities") and Table 2 ("Alarming Paths and Monitoring"), the particular components have maximum activity intervals of:

Every 3 calendar months, verify:

- Electrolyte level (Station dc supply voltage and unintentional ground detection is being maintained more frequently by the monitoring system)

Every 18 calendar months, verify/inspect the following:

- Battery bank ohmic values to station battery baseline (if performance tests are not opted)
- Battery charger float voltage
- Battery rack integrity
- Cell condition of all individual battery cells (where visible)
- Battery continuity
- Battery terminal connection resistance
- Battery cell-to-cell resistance (where available to measure)

Every 6 calendar years, verify/perform the following:

- Verify operation of the relay inputs and outputs that are essential to proper functioning of the Protection System
- Verify acceptable measurement of power system input values as seen by the relays
- Verify that each trip coil is able to operate the circuit breaker, interrupting device, or mitigating device
- For electro-mechanical lock-out relays and auxiliary relays, electrical operation of electromechanical trip and auxiliary devices
- Battery performance test (if ohmic tests are not opted)

Every 12 calendar years, verify the following:

- Instrumentation transformers
- Protection system component monitoring for the battery system signals are conveyed to a location where corrective action can be initiated
- Verify all paths of the control and trip circuits

Example #3: A combination of monitored and unmonitored components within a given Protection System might be:

- A microprocessor relay with alarm connected to SCADA to alert 24-hr staffed operations center; it has internal self diagnosis and alarms. (monitored)
- Instrument transformers, with monitoring, connected as inputs to that relay (monitored)
- Vented lead acid battery without any alarms connected to SCADA (unmonitored)
- Circuit breaker with a trip coil, with no circuits monitored (unmonitored)

Given the particular components, conditions, and using the Table 1 ("Maximum Allowable Testing Intervals and Maintenance Activities") and Table 2 ("Alarming Paths and Monitoring"), the particular components shall have maximum activity intervals of:

Every 3 calendar months, verify/inspect the following:

- Station dc supply voltage
- For unintentional grounds
- Electrolyte level

Every 18 calendar months, verify/inspect the following:

- Battery bank ohmic values to station battery baseline (if performance tests are not opted)
- Battery charger float voltage
- Battery rack integrity
- Battery continuity
- Battery terminal connection resistance
- Battery cell-to-cell resistance (where available to measure)

- Cell condition of all individual battery cells (where visible)

Every 6 calendar years, perform/verify the following:

- Battery performance test (if ohmic tests are not opted)
- Verify that each trip coil is able to operate the circuit breaker, interrupting device, or mitigating device
- For electro-mechanical lock-out relays and auxiliary relays, electrical operation of electromechanical trip and auxiliary devices

Every 12 calendar years, verify the following:

- The microprocessor relay alarm signals are conveyed to a location where corrective action can be taken
- Microprocessor relay settings are as specified
- Operation of the microprocessor's relay inputs and outputs that are essential to proper functioning of the Protection System
- Acceptable measurement of power system input values seen by the microprocessor protective relay
- Verify all paths of the control and trip circuits

Why do components have different maintenance activities and intervals if they are monitored?
The intent behind different activities and intervals for monitored equipment is to allow less frequent manual intervention when more information is known about the condition of Protection System components. Condition-Based Maintenance is a valuable asset to improve reliability.

Can all components in a Protection System be monitored?
No. For some components in a protection system, monitoring will not be relevant. For example a battery will always need some kind of inspection.

We have a 30 year old oil circuit breaker with a red indicating lamp on the substation relay panel that is illuminated only if there is continuity through the breaker trip coil. There is no SCADA monitor or relay monitor of this trip coil. The line protection relay package that trips this circuit breaker is a microprocessor relay that has an integral alarm relay that will assert on a number of conditions that includes a loss of power to the relay. This alarm contact connects to our SCADA system and alerts our 24-hour operations center of relay trouble when the alarm contact closes. This microprocessor relay trips the circuit breaker only and does not monitor trip coil continuity or other things such as trip current. Are the components monitored or not? How often must I perform maintenance?
The protective relay is monitored and can be maintained every 12 years or when a maintenance correctable issue arises. The control circuitry can be maintained every 12 years. The trip coil(s) has to be electrically operated at least once every 6 years.

8. Maximum Allowable Verification Intervals

The Maximum Allowable Testing Intervals and Maintenance Activities show how CBM with newer device types can reduce the need for many of the tests and site visits that older Protection System components require. As explained below, there are some sections of the Protection System that monitoring or data analysis may not verify. Verifying these sections of the Protection Systems requires some persistent TBM activity in the maintenance program. However, some of this TBM can be carried out remotely - for example, exercising a circuit breaker through the relay tripping circuits using the relay remote control capabilities can be used to verify function of one tripping path and proper trip coil operation, if there has been no fault or routine operation to demonstrate performance of relay tripping circuits.

8.1 Maintenance Tests

Periodic maintenance testing is performed to ensure that the protection and control system is operating correctly after a time period of field installation. These tests may be used to ensure that individual components are still operating within acceptable performance parameters - this type of test is needed for components susceptible to degraded or changing characteristics due to aging and wear. Full system performance tests may be used to confirm that the total Protection System functions from measurement of power system values, to properly identifying fault characteristics, to the operation of the interrupting devices.

8.1.1 Table of Maximum Allowable Verification Intervals

Table 1 (collectively known as Table 1, individually called out as Tables 1-1 through 1-5), in the Standard, specifies maximum allowable verification intervals for various generations of protection systems and categories of equipment that comprise protection systems. The right column indicates maintenance activities required for each category.

The types of components are illustrated in Figures 1 and 2 at the end of this paper. Figure 1 shows an example of telecommunications-assisted line protection system comprising substation equipment at each terminal and a telecommunications channel for relaying between the two substations. Figure 2 shows an example of a Generation station layout. The various subsystems of a Protection System that need to be verified are shown. UFLS, UVLS, and SPS are additional categories of Table 1 that are not illustrated in these Figures. UFLS, UVLS and SPS all use identical equipment as Protection Systems in the performance of their functions and therefore have the same maintenance needs.

While it is easy to associate protective relays to multiple levels of monitoring, it is also true that most of the components that can make up a Protection System can also have technological advancements that place them into higher levels of monitoring.

To use the Maintenance Activities and Intervals Tables from PRC-005-2:

- First find the Table associated with your component. The tables are arranged in the order of mention in the definition of Protection System;
    - Table 1-1 is for protective relays,

  - Table 1-2 is for the associated communications systems,
  - Table 1-3 is for current and voltage sensing devices,
  - Table 1-4 is for station dc supply and
  - Table 1-5 is for control circuits. There is an additional table,
  - Table 2, which brings alarms into the maintenance arena; this was broken out to simplify the other tables.

- Next look within that table for your device and its degree of monitoring. The tables have different hands-on maintenance activities prescribed depending upon the degree to which you monitor your equipment. Find the maintenance activity that applies to the monitoring level that you have on your piece of equipment.
- This Maintenance Activity is the minimum maintenance activity that must be documented.
- If your PSMP (plan) requires <u>more activities</u> then you must perform and document to this higher standard.
- After the maintenance activity is known, check the Maximum Maintenance Interval; this time is the maximum time allowed between hands-on maintenance activity cycles of this component.
- If your PSMP (plan) requires activities <u>more often</u> than the Tables maximum then you must perform and document those activities to your more stringent standard.
- Any given component of a Protection System can be determined to have a degree of monitoring that may be different from another component within that same Protection System. For example, in a given Protection System it is possible for an entity to have a monitored protective relay and an unmonitored associated communications system; this combination would require hands-on maintenance activity on the relay at least once every 12 years and attention paid to the communications system as often as every 3 months.
- An entity does not have to utilize the extended time intervals made available by this use of condition-based monitoring. An easy choice to make is to simply utilize the unmonitored level of maintenance made available on each of the 5 Tables. While the maintenance activities resulting from this choice would require more maintenance man-hours, the maintenance requirements may be simpler to document and the resulting maintenance plans may be easier to create.

For each Protection System component, Table 1 shows maximum allowable testing intervals for the various degrees of monitoring. These degrees of monitoring, or levels, range from the legacy unmonitored through a system that is more comprehensively monitored.

It has been noted here that an entity may have a PSMP that is more stringent than PRC-005-2. There may be any number of reasons that an entity chooses a more stringent plan than the minimums prescribed within PRC-005-2, most notable of which is an entity using performance based maintenance methodology. (Another reason for having a more stringent plan than is required could be a regional entity could have more stringent requirements.) Regardless of the rationale behind an entity's more stringent plan, it is incumbent upon them to perform the

activities, and perform them at the stated intervals, of the entity's PSMP. A quality PSMP will help assure system reliability and adhering to any given PSMP should be the goal.

8.1.2 Additional Notes for Tables 1-1 through 1-5

1. For electro-mechanical relays, adjustment is required to bring measurement accuracy within the tolerance needed by the asset owner. Microprocessor-relays with no remote monitoring of alarm contacts, etc, are un-monitored relays and need to be verified within the Table interval as other un-monitored relays but may be verified as functional by means other than testing by simulated inputs.

2. Microprocessor relays typically are specified by manufacturers as not requiring calibration, but acceptable measurement of power system input values must be verified (verification of the Analog to Digital [A/D] converters) within the Table intervals. The integrity of the digital inputs and outputs that are used as protective functions must be verified within the Table intervals.

3. Any Phasor Measurement Unit (PMU) function whose output is used in a protection system or SPS (as opposed to a monitoring task) must be verified as a component in a protection system.

4. In addition to verifying the circuitry that supplies dc to the protection system, the owner must maintain the station dc supply. The most widespread station dc supply is the station battery and charger. Unlike most Protection System components physical inspection of station batteries for signs of component failure, reduced performance, and degradation are required to ensure that the station battery is reliable enough to deliver dc power when required. IEEE Standards 450, 1188, and 1106 for Vented Lead-Acid, Valve-Regulated Lead-Acid, and Nickel-Cadmium batteries, respectively (which are the most commonly used substation batteries on the NERC BES) have been developed as an important reference source of maintenance recommendations. The Protection System owner might use the applicable IEEE recommended practice which contains information and recommendations concerning the maintenance, testing and replacement of its substation battery. However, the methods prescribed in these IEEE recommendations cannot be specifically required because they do not apply to all battery applications.

5. Aggregated small entities might distribute the testing of the population of UFLS/UVLS systems, and large entities will usually maintain a portion of these systems in any given year. Additionally, if relatively small quantities of such systems do not perform properly, it will not affect the integrity of the overall program. Thus these distributed systems have decreased requirements as compared to other Protection Systems.

6. Voltage & Current Sensing Device circuit input connections to the protection system relays can be verified by (but not limited to) comparison of measured values on live circuits or by using test currents and voltages on equipment out of service for maintenance. The verification process can be automated or manual. The values should be verified to be as expected, (phase value and phase relationships are both equally important to verify).

7. "End-to-end test" as used in this Supplementary Reference is any testing procedure that creates a remote input to the local communications-assisted trip scheme. While this can

be interpreted as a GPS-type functional test it is not limited to testing via GPS. Any remote scheme manipulation that can cause action at the local trip path can be used to functionally-test the dc Control Circuitry. A documented real-time trip of any given trip path is acceptable in lieu of a functional trip test. It is possible, with sufficient monitoring, to be able to verify each and every parallel trip path that participated in any given dc Control Circuit trip. Or, another possible solution is that a single trip path from a single monitored relay can be verified to be the trip path that successfully tripped during a real-time operation. The variations are only limited by the degree of engineering and monitoring that an entity desires to pursue.

8. A/D verification may use relay front panel value displays, or values gathered via data communications. Groupings of other measurements (such as vector summation of bus feeder currents) can be used for comparison if calibration requirements assure acceptable measurement of power system input values.
9. Notes 1-8 attempt to describe some testing activities; they do not represent the only methods to achieve these activities but rather some possible methods. Technological advances, ingenuity and/or industry accepted techniques can all be used to satisfy maintenance activity requirements; the Standard is technology and method neutral in most cases.

8.1.3 Frequently Asked Questions:

What is meant by "Verify that settings are as specified" maintenance activity in Table 1-1?
Verification of settings is an activity directed mostly towards microprocessor based relays.
For relay maintenance departments that choose to test microprocessor based relays in the same manner as electro-mechanical relays are tested, the testing process sometimes requires that some specific functions be disabled. Later tests might enable the functions previously disabled but perhaps still other functions or logic statements were then masked out. It is imperative that, when the relay is placed into service, the settings in the relay be the settings that were intended to be in that relay or as the Standard states "…settings are as specified."

Many of the microprocessor based relays available today have software tools which provide this functionality and generate reports for this purpose.

For evidence or documentation of this requirement a simple recorded acknowledgement that the settings were checked to be as specified is sufficient.

The drafting team was careful not to require "…that the relay settings be correct…" because it was believed that this might then place a burden of proof that the specified settings would result in the correct intended operation of the interrupting device. While that is a noble intention, the measurable proof of such a requirement is immense. The intent is that settings of the component be as specified at the conclusion of maintenance activities, whether those settings may have "drifted" since the prior maintenance or whether changes were made as part of the testing process.

Are electromechanical relays included in the "Verify that settings are as specified" maintenance activity in Table 1-1?
Verification of settings is an activity directed towards the application of protection related functions of microprocessor based relays. Electromechanical relays require calibration

verification by voltage and/or current injection, and thus the settings are verified during calibration activity. In the example of a time-overcurrent relay, a minor deviation in time dial, versus the settings, may be acceptable as long as the relay calibration is within accepted tolerances at the injected current amplitudes. A major deviation may require further investigation, as it could indicate a problem with the relay or an incorrect relay style for the application.

The verification of phase current and voltage measurements by comparison to other quantities seems reasonable. How, though, can I verify residual or neutral currents, or 3V0 voltages, by comparison, when my system is closely balanced?
Since these inputs are verified at commissioning, maintenance verification requires ensuring that phase quantities are as expected and that 3IO and 3VO quantities appear equal to or close to 0. These quantities also may be verified by use of oscillographic records for connected microprocessor relays as recorded during system disturbances. Such records may compare to similar values recorded at other locations by other microprocessor relays for the same event, or compared to expected values (from short circuit studies) for known fault locations.

What does this Standard require for testing an auxiliary tripping relay?
Table 1 requires that a trip test must verify that the auxiliary tripping relay(s) and/or lockout relay(s) which are directly in a trip path from the protective relay to the interrupting device trip coil operate(s) electrically. Auxiliary outputs not in a trip path (i.e. annunciation or DME input) are not required, by this Standard, to be checked.

Do I have to perform a full end-to-end test of a Special Protection System?
No. All portions of the SPS need to be maintained, and the portions must overlap, but the overall SPS does not need to have a single end-to-end test. In other words it may be tested in piecemeal fashion provided all of the pieces are verified.

What about SPS interfaces between different entities or owners?
As in all of the Protection System requirements, SPS segments can be tested individually thus minimizing the need to accommodate complex maintenance schedules.

What do I have to do if I am using a phasor measurement unit (PMU) as part of a Protection System or Special Protection System?
Any Phasor Measurement Unit (PMU) function whose output is used in a Protection System or Special Protection System (as opposed to a monitoring task) must be verified as a component in a Protection System.

How do I maintain a Special Protection System or Relay Sensing for Centralized UFLS or UVLS Systems?
Since components of the SPS, UFLS, or UVLS are the same types of components as those in Protection Systems then these components should be maintained like similar components used for other Protection System functions. In many cases the devices for SPS, UFLS and UVLS are also used for other protective functions. The same maintenance activities apply with the

exception that distributed systems (UFLS and UVLS) have fewer dc supply and control circuitry maintenance activity requirements.
For the testing of the output action, verification may be by breaker tripping, but may be verified in overlapping segments. For example an SPS that trips a remote circuit breaker might be tested by testing the various parts of the scheme in overlapping segments. Another method is to document the real-time tripping of an SPS scheme should that occur. Forced trip tests of circuit breakers (etc) that are a part of distributed UFLS or UVLS schemes are not required.

The established maximum allowable intervals do not align well with the scheduled outages for my power plant. Can I extend the maintenance to the next scheduled outage following the established maximum interval?
No. You must complete your maintenance within the established maximum allowable intervals in order to be compliant. You will need to schedule your maintenance during available outages to complete your maintenance as required, even if it means that you may do protective relay maintenance more frequently than the maximum allowable intervals. The maintenance intervals were selected with typical plant outages, among other things, in mind.

If I am unable to complete the maintenance as required due to a major natural disaster (hurricane, earthquake, etc), how will this affect my compliance with this Standard.
The Sanction Guidelines of the North American Electric Reliability Corporation effective January 15, 2008 provides that the Compliance Monitor will consider extenuating circumstances when considering any sanctions.

What if my observed testing results show a high incidence of out-of-tolerance relays, or, even worse, I am experiencing numerous relay misoperations due to the relays being out-of-tolerance?
The established maximum time intervals are mandatory only as a not-to-exceed limitation. The establishment of a maximum is measurable. But, any entity can choose to test some or all of their Protection System components more frequently (or, to express it differently, exceed the minimum requirements of the Standard). Particularly, if you find that the maximum intervals in the Standard do not achieve your expected level of performance, it is understandable that you would maintain the related equipment more frequently. A high incidence of relay Misoperations is in no one's best interest. The BES and an entity's bottom line both suffer.

We believe that the 3-month interval between inspections is unneccessary, why can we not perform these inspections twice per year?
The standard drafting team believes that routine monthly inspections are the norm. To align routine station inspections with other important inspections the 3-month interval was chosen. In lieu of station visits many activities can be accomplished with automated monitoring and alarming.

Our maintenance plan calls for us to perform routine protective relay tests every 3 years; if we are unable to achieve this schedule but we are able to complete the procedures in less than the Maximum Time Interval then are we in or out of compliance?

You are out of compliance. You must maintain your equipment to your stated intervals within your maintenance plan. The protective relays (and any Protection System component) cannot be tested at intervals that are longer than the maximum allowable interval stated in the Tables and yet you must conform to your own maintenance plan. Therefore you should design your maintenance plan such that it is not in conflict with the Minimum Activities and the Maximum Intervals. You then must maintain your equipment according to your maintenance plan. You will end up being compliant with both the Standard and your own plan.

Please provide a sample list of devices or systems that must be verified in a generator, generator step-up transformer, and generator connected station auxiliary transformer to meet the requirements of this Maintenance Standard.

Examples of typical devices and systems that may directly trip the generator, or trip through a lockout relay may include but are not necessarily limited to:

- Fault protective functions, including distance functions, voltage-restrained overcurrent functions, or voltage-controlled overcurrent functions
- Loss-of-field relays
- Volts-per-hertz relays
- Negative sequence overcurrent relays
- Over voltage and under voltage protection relays
- Stator-ground relays
- Communications-based protection systems such as transfer-trip systems
- Generator differential relays
- Reverse power relays
- Frequency relays
- Out-of-step relays
- Inadvertent energization protection
- Breaker failure protection

For generator step up or generator-connected station auxiliary transformers, operation of any the following associated protective relays frequently would result in a trip of the generating unit and, as such, would be included in the program:

- Transformer differential relays
- Neutral overcurrent relay
- Phase overcurrent relays

Relays which trip breakers serving station auxiliary loads such as pumps, fans, or fuel handling equipment, etc., need not be included in the program even if the loss of the those loads could result in a trip of the generating unit. Furthermore, relays which provide protection to secondary

unit substation (SUS) or low switchgear transformers and relays protecting other downstream plant electrical distribution system components are not included in the scope of this program even if a trip of these devices might eventually result in a trip of the generating unit. For example, a thermal overcurrent trip on the motor of a coal-conveyor belt could eventually lead to the tripping of the generator, but it does not cause the trip.

What is meant by "verify operation of the relay inputs and outputs that are essential to proper functioning of the Protection System?"

Any input or output (of the relay) that "affects the tripping" of the breaker is included in the scope of I/O of the relay to be verified. By "affects the tripping" one needs to realize that sometimes there are more Inputs and Outputs than simply the output to the trip coil. Many important protective functions include things like Breaker Fail Initiation, Zone Timer Initiation and sometimes even 52a/b contact inputs are needed for a protective relay to correctly operate.

Each input should be "picked up" or "turned on and off" and verified as changing state by the microprocessor of the relay. Each output should be "operated" or "closed and opened" from the microprocessor of the relay and the output should be verified to change state on the output terminals of the relay. One possible method of testing inputs of these relays is to "jumper" the needed dcv to the input and verify that the relay registered the change of state.

Electro-mechanical Lock-out relays (86) and Auxiliary tripping relays (94) (used to convey the tripping current to the trip coils) need to be electrically operated to prove the capability of the device to change state. These tests need to be accomplished at least every 6 years, unless PBM methodology is applied.

The contacts on the 86 or 94 that change state to pass on the trip current to a breaker trip coil need only be checked every twelve years with the control circuitry.

Other devices in the control circuitry that are used for other protective functions besides tripping (including, but not limited to, electro-mechanical Breaker Fail Initiation relays) need only be verified with the control circuitry every twelve years.

8.2 Retention of Records

PRC-005-1 describes a reporting or auditing cycle of one year and retention of records for three years. However, with a three year retention cycle, the records of verification for a protection system might be discarded before the next verification, leaving no record of what was done if a Misoperation or failure is to be analyzed.

PRC-005-2 corrects this by requiring:

The Transmission Owner, Generator Owner, and Distribution Provider shall each retain documentation of the two most recent performances of each distinct maintenance activity for the Protection System components, or to the previous scheduled (on-site) audit date, whichever is longer.

This requirement assures that the documentation shows that the interval between maintenance cycles correctly meets the maintenance interval limits. The requirement is actually alerting the industry to documentation requirements already implemented by audit teams. Evidence of

compliance bookending the interval shows interval accomplished instead of proving only your planned interval.

8.2.1 Frequently Asked Questions:

Please use a specific example to demonstrate the data retention requirements.
The data retention requirements are intended to allow the availability of maintenance records to demonstrate that the time intervals in your maintenance plan were upheld. For example: "Company A" has a maintenance plan that requires its electro-mechanical protective relays be tested, for routine scheduled tests, every 3 calendar years with a maximum allowed grace period of an additional 18 months. This entity would be required to maintain its records of maintenance of its last two routine scheduled tests. Thus its test records would have a latest routine test as well as its previous routine test. The interval between tests is therefore provable to an auditor as being within "Company A's" stated maximum time interval of 4.5 years.

The intent is not to require three test results proving two time intervals, but rather have two test results proving the last interval. The drafting team contends that this minimizes storage requirements while still having minimum data available to demonstrate compliance with time intervals.

Realistically, the Standard is providing advanced notice of audit team documentation requests; this type of information has already been requested by auditors.

If an entity prefers to utilize Performance Based Maintenance then statistical data may well be retained for extended periods to assist with future adjustments in time intervals.

If an equipment item is replaced then the entity can restart the maintenance-time-interval-clock if desired, however the replacement of equipment does not remove any documentation requirements that would have been required to verify compliance with time-interval requirements; in other words do not discard maintenance data that goes to verify your work.

The retention of documentation for new and/or replaced equipment is all about proving that the maintenance intervals had been in compliance. For example, a long range plan of upgrades might lead an entity to ignore required maintenance; retaining the evidence of prior maintenance that existed before any retirements and upgrades proves compliance with the Standard.

What does this Maintenance Standard say about commissioning? Is it necessary to have documentation in your maintenance history of the completion of commission testing?
This Standard does not establish requirements for commission testing. Commission testing includes all testing activities necessary to conclude that a facility has been built in accordance with design. While a thorough commission testing program would include, either directly or indirectly, the verification of all those Protection System attributes addressed by the maintenance activities specified in the Tables of PRC-005-2, verification of the adequacy of initial installation necessitates the performance of testing and inspections that go well beyond these routine maintenance activities. For example, commission testing might set baselines for future tests; perform acceptance tests and/or warranty tests; utilize testing methods that are not generally done routinely like staged-fault-tests.

However, many of the Protection System attributes which are verified during commission testing are not subject to age related or service related degradation and need not be re-verified within an ongoing maintenance program. Example – it is not necessary to re-verify correct terminal strip wiring on an ongoing basis.

PRC-005-2 assumes that thorough commission testing was performed prior to a protection system being placed in service. PRC-005-2 requires performance of maintenance activities that are deemed necessary to detect and correct plausible age and service related degradation of components such that a properly built and commission tested Protection System will continue to function as designed over its service life.

It should be noted that commission testing frequently is performed by a different organization than that which is responsible for the ongoing maintenance of the Protection System. Furthermore, the commission testing activities will not necessarily correlate directly with the maintenance activities required by the Standard. As such, it is very likely that commission testing records will deviate significantly from maintenance records in both form and content and therefore, it is not necessary to maintain commission testing records within the maintenance program documentation.

Notwithstanding the differences in records, an entity would be wise to retain commissioning records to show a maintenance start date. (See below). An entity that requires that their commissioning tests have, at a minimum, the requirements of PRC-005-2 would help that entity prove time interval maximums by setting the initial time clock.

How do you determine the initial due date for maintenance?

The initial due date for maintenance should be based upon when a Protection System was tested. Alternatively, an entity may choose to use the date of completion of the commission testing of the Protection System component and the system was placed into service as the starting point in determining its first maintenance due dates. Whichever method is chosen, for newly installed Protection Systems the components should not be placed into service until minimum maintenance activities have taken place.

It is conceivable that there can be a (substantial) difference in time between the date of testing as compared to the date placed into service. The use of the "Calendar Year" language can help determine the next due date without too much concern about being non-compliant for missing test dates by a small amount (provided your dates are not already at the end of a year). However, if there is a substantial amount of time difference between testing and in-service dates then the testing date should be followed because it is the degradation of components that is the concern. While accuracy fluctuations may decrease when components are not energized there are cases when degradation can take place even though the device is not energized. Minimizing the time between commissioning tests and in-service dates will help.

If I miss two battery inspections four times out of 100 protection system components on my transmission system, does that count as 2 percent or 8 percent when counting Violation Severity Level (VSL) for R3?

The entity failed to complete its scheduled program on two of its one hundred protection system components which would equate to two percent for application to the VSL Table for Requirement R3.

How do I achieve a "grace period" without being out of compliance?
For the purposes of this example, concentrating on just unmonitored protective relays,– Table 1-1 specifies a maximum time interval (between the mandated maintenance activities) of 6 calendar years. Your plan must ensure that your unmonitored relays are tested at least once every 6 calendar years. You could, within your PSMP, require that your unmonitored relays be tested every 4 calendar years with a maximum allowable time extension of 18 calendar months. This allows an entity to have deadlines set for the auto-generation of work orders but still have the flexibility in scheduling complex work schedules. This also allows for that 18 calendar months to act as a buffer, a grace period, in the event of unforeseen events. You will note that this example of a maintenance plan interval has a planned time of 4 years; it also has a built-in time extension allowed within the PSMP and yet does not exceed the maximum time interval allowed by the Standard. So while there are no time extensions allowed beyond the Standard, an entity can still have substantial flexibility to maintain their Protection System components.

8.3 Basis for Table 1 Intervals

When developing the original *Protection System Maintenance – A Technical Reference* in 2007. the SPCTF collected all available data from Regional Entities (REs) on time intervals recommended for maintenance and test programs. The recommendations vary widely in categorization of relays, defined maintenance actions, and time intervals, precluding development of intervals by averaging. The SPCTF also reviewed the 2005 Report [2] of the IEEE Power System Relaying Committee Working Group I-17 (Transmission Relay System Performance Comparison). Review of the I-17 report shows data from a small number of utilities, with no company identification or means of investigating the significance of particular results.

To develop a solid current base of practice, the SPCTF surveyed its members regarding their maintenance intervals for electromechanical and microprocessor relays, and asked the members to also provide definitively-known data for other entities. The survey represented 470 GW of peak load, or 64% of the NERC peak load. Maintenance interval averages were compiled by weighting reported intervals according to the size (based on peak load) of the reporting utility. Thus, the averages more accurately represent practices for the large populations of protection systems used across the NERC regions.

The results of this survey with weighted averaging indicate maintenance intervals of 5 years for electromechanical or solid state relays, and 7 years for un-monitored microprocessor relays.

A number of utilities have extended maintenance intervals for microprocessor relays beyond 7 years, based on favorable experience with the particular products they have installed. To provide a technical basis for such extension, the SPCTF authors developed a recommendation of 10 years using the Markov modeling approach from [1] as summarized in Section 8.4. The results of this modeling depend on the completeness of self-testing or monitoring. Accordingly, this extended interval is allowed by Table 1 only when such relays are monitored as specified in the attributes of monitoring contained in Tables 1-1 through 1-5 and Table 2. Monitoring is capable of

reporting protection system health issues that are likely to affect performance within the 10 year time interval between verifications.

It is important to note that, according to modeling results, protection system availability barely changes as the maintenance interval is varied below the 10-year mark. Thus, reducing the maintenance interval does not improve protection system availability. With the assumptions of the model regarding how maintenance is carried out, reducing the maintenance interval actually degrades protection system availability.

8.4 Basis for Extended Maintenance Intervals for Microprocessor Relays

Table 1 allows maximum verification intervals that are extended based on monitoring level. The industry has experience with self-monitoring microprocessor relays that leads to the Table 1 value for a monitored relay as explained in Section 8.3. To develop a basis for the maximum interval for monitored relays in their *Protection System Maintenance – A Technical Reference*, the SPCTF used the methodology of Reference [1], which specifically addresses optimum routine maintenance intervals. The Markov modeling approach of [1] is judged to be valid for the design and typical failure modes of microprocessor relays.

The SPCTF authors ran test cases of the Markov model to calculate two key probability measures:

- Relay Unavailability - the probability that the relay is out of service due to failure or maintenance activity while the power system element to be protected is in service.
- Abnormal Unavailability - the probability that the relay is out of service due to failure or maintenance activity when a fault occurs, leading to failure to operate for the fault.

The parameter in the Markov model that defines self-monitoring capability is ST (for self test). ST = 0 if there is no self-monitoring; ST = 1 for full monitoring. Practical ST values are estimated to range from .75 to .95. The SPCTF simulation runs used constants in the Markov model that were the same as those used in [1] with the following exceptions:

Sn, Normal tripping operations per hour = 21600 (reciprocal of normal fault clearing time of 10 cycles)

Sb, Backup tripping operations per hour = 4320 (reciprocal of backup fault clearing time of 50 cycles)

Rc, Protected component repairs per hour = 0.125 (8 hours to restore the power system)

Rt, Relay routine tests per hour = 0.125 (8 hours to test a protection system)

Rr, Relay repairs per hour = 0.08333 (12 hours to complete a protection system repair after failure)

Experimental runs of the model showed low sensitivity of optimum maintenance interval to these parameter adjustments.

The resulting curves for Relay Unavailability and Abnormal Unavailability versus maintenance interval showed a broad minimum (optimum maintenance interval) in the vicinity of 10 years –

the curve is flat, with no significant change in either unavailability value over the range of 9, 10, or 11 years. This was true even for a relay Mean Time between Failures (MTBF) of 50 years, much lower than MTBF values typically published for these relays. Also, the Markov modeling indicates that both the relay unavailability and abnormal unavailability actually become higher with more frequent testing. This shows that the time spent on these more frequent tests yields no failure discoveries that approach the negative impact of removing the relays from service and running the tests.
The PSMT SDT discussed the practical need for "time-interval extensions" or "grace periods" to allow for scheduling problems that resulted from any number of business contingencies. The time interval discussions also focused on the need to reflect industry norms surrounding Generator outage frequencies. Finally it was again noted that FERC Order 693 demanded maximum time intervals. "Maximum time intervals" by their very term negates any "time-interval extension" or "grace periods". To recognize the need to follow industry norms on Generator outage frequencies and accommodate a form of time-interval extension while still following FERC Order 693 the Standard Drafting Team arrived at a 6 year interval for the electro-mechanical relay instead of the 5 year interval arrived at by the SPCTF. The PSMT SDT has followed the FERC directive for a *maximum* time interval and has determined that no extensions will be allowed. Six years has been set for the maximum time interval between manual maintenance activities. This maximum time interval also works well for maintenance cycles that have been in use in generator plants for decades.

For monitored relays, the PSMT SDT notes that the SPCTF called for 10 years as the interval between maintenance activities. This 10 year interval was chosen even though there was "…no significant change in unavailability value over the range of 9, 10, or 11 years. This was true even for a relay Mean Time between Failures (MTBF) of 50 years…" The Standard Drafting Team again sought to align maintenance activities with known successful practices and outage schedules. The Standard does not allow extensions on any component of the Protection System; thus the maximum allowed interval for these components has been set to12 years. Twelve years also fits well into the traditional maintenance cycles of both substations and generator plants.

Also of note is the Table's use of the term "Calendar" in the column for "Maximum Maintenance Interval". The PSMT SDT deemed it necessary to include the term "Calendar" to facilitate annual maintenance planning, scheduling and implementation. This need is the result of known occurrences of system requirements that could cause maintenance schedules to be missed by a few days or weeks. The PSMT SDT chose the term "Calendar" to preclude the need to have schedules be met to the day. An electro-mechanical protective relay that is maintained in year #1 need not be revisited until 6 years later (year #7). For example: a relay was maintained April 10, 2008; maintenance would need to be completed no later than December 31, 2014.

Though not a requirement of this Standard, to stay in line with many Compliance Enforcement Agencies audit processes an entity should define, within their own PSMP, the entity's use of terms like annual, calendar year, etc. Then, once this is within the PSMP the entity should abide by their chosen language.

9. Performance-Based Maintenance Process

In lieu of using the Table 1 intervals, a performance-based maintenance process may be used to establish maintenance intervals (*PRC-005 Attachment A Criteria for a Performance-Based Protection System Maintenance Program*). A performance-based maintenance process may justify longer maintenance intervals, or require shorter intervals relative to Table 1. In order to use a performance-based maintenance process, the documented maintenance program must include records of repairs, adjustments, and corrections to covered protection systems in order to provide historical justification for intervals other than those established in Table 1. Furthermore, the asset owner must regularly analyze these records of corrective actions to develop a ranking of causes. Recurrent problems are to be highlighted, and remedial action plans are to be documented to mitigate or eliminate recurrent problems.

Utilities with performance-based maintenance track performance of protection systems, demonstrate how they analyze findings of performance failures and aberrations, and implement continuous improvement actions. Since no maintenance program can ever guarantee that no malfunction can possibly occur, documentation of a performance-based maintenance program would serve the utility well in explaining to regulators and the public a Misoperation leading to a major system outage event.

A performance-based maintenance program requires auditing processes like those included in widely used industrial quality systems (such as ***ISO 9001-2000, Quality management systems — Requirements;*** or applicable parts of the NIST Baldridge National Quality Program). The audits periodically evaluate:

- The completeness of the documented maintenance process
- Organizational knowledge of and adherence to the process
- Performance metrics and documentation of results
- Remediation of issues
- Demonstration of continuous improvement.

In order to opt into a Performance-based Maintenance (PBM) program the asset owner must first sort the various Protection System components into population segments. Any population segment must be comprised of at least 60 individual units; if any asset owner opts for PBM but does not own 60 units to comprise a population then that asset owner may combine data from other asset owners until the needed 60 units is aggregated. Each population segment must be composed of a grouping of Protection Systems or components of a consistent design standard or particular model or type from a single manufacturer and subjected to similar environmental factors. For example: One segment cannot be comprised of both GE & Westinghouse electro-mechanical lock-out relays; likewise, one segment cannot be comprised of 60 GE lock-out relays, 30 of which are in a dirty environment and the remaining 30 from a clean environment. This PBM process cannot be applied to batteries but can be applied to all other components of a Protection System including (but not limited to) specific battery chargers, instrument transformers, trip coils and/or control circuitry (etc.).

9.1 Minimum Sample Size

Large Sample Size

An assumption that needs to be made when choosing a sample size is "the sampling distribution of the sample mean can be approximated by a normal probability distribution." The Central Limit Theorem states: "In selecting simple random samples of size *n* from a population, the sampling distribution of the sample mean *x* can be approximated by a normal probability distribution as the sample size becomes large." (Essentials of Statistics for Business and Economics, Anderson, Sweeney, Williams, 2003)

To use the Central Limit Theorem in statistics, the population size should be large. The references below are supplied to help define what is large.

> "… whenever we are using a large simple random sample (rule of thumb: n>=30), the central limit theorem enables us to conclude that the sampling distribution of the sample mean can be approximated by a normal distribution." (Essentials of Statistics for Business and Economics, Anderson, Sweeney, Williams, 2003)
>
> "If samples of size n, when n>=30, are drawn from any population with a mean *u* and a standard deviation σ, the sampling distribution of sample means approximates a normal distribution. The greater the sample size, the better the approximation." (Elementary Statistics - Picturing the World, Larson, Farber, 2003)
>
> "The sample size is large (generally n>=30)… (Introduction to Statistics and Data Analysis - Second Edition, Peck, Olson, Devore, 2005)
>
> "… the normal is often used as an approximation to the *t* distribution in a test of a null hypothesis about the mean of a normally distributed population when the population variance is estimated from a relatively large sample. A sample size exceeding 30 is often given as a minimal size in this connection." (Statistical Analysis for Business Decisions, Peters, Summers, 1968)

Error of Distribution Formula

Beyond the large sample size discussion above, a sample size requirement can be estimated using the bound on the Error of Distribution Formula when the expected result is of a "Pass/Fail" format and will be between 0 and 1.0.

The Error of Distribution Formula is:

$$B = z\sqrt{\frac{\pi(1-\pi)}{n}}$$

Where:

B = bound on the error of distribution (allowable error)

z = standard error
π = expected failure rate
n = sample size required

Solving for n provides:

$$n = \pi(1-\pi)\left(\frac{z}{B}\right)^2$$

Minimum Population Size to use Performance-based Program
One entity's population of components should be large enough to represent a sizeable sample of a vendor's overall population of manufactured devices. For this reason the following assumptions are made:

B = 5%
z = 1.96 (This equates to a 95% confidence level)
π = 4%

Using the equation above, n=59.0.

Minimum Sample Size to evaluate Performance-based Program
The number of components that should be included in a sample size for evaluation of the appropriate testing interval can be smaller because a lower confidence level is acceptable since the sample testing is repeated or updated annually. For this reason, the following assumptions are made:

B = 5%
z = 1.44 (85% confidence level)
π = 4%

Using the equation above, n=31.8.

Recommendation
Based on the above discussion, a sample size should be at least 30 to allow use of the equation mentioned. Using this and the results of the equation, the following numbers are recommended (and required within the Standard):

Minimum Population Size to use Performance-based Maintenance Program = 60

Minimum Sample Size to evaluate Performance-based Program = 30.

Once the population segment is defined then maintenance must begin within the intervals as outlined for the device described in the Tables 1-1 through 1-5. Time intervals can be lengthened provided the last year's worth of components tested (or the last 30 units maintained, whichever is more) had fewer than 4% countable events. It is notable that 4% is specifically chosen because an entity with a small population (60 units) would have to adjust its time intervals between

maintenance if more than 1 countable event was found to have occurred during the last analysis period. A smaller percentage would require that entity to adjust the time interval between maintenance activities if even one unit is found out of tolerance or causes a Misoperation.

The minimum number of units that can be tested in any given year is 5% of the population. Note that this 5% threshold sets a practical limitation on total length of time between intervals at 20 years.

If at any time the number of countable events equals or exceeds 4% of the last year's tested components (or the last 30 units maintained, whichever is more) then the time period between manual maintenance activities must be decreased. There is a time limit on reaching the decreased time at which the countable events is less than 4%; this must be attained within three years.

This additional time period of three years to restore segment performance to <4% countable events is mandated to keep entities from "gaming the PBM system". It is believed that this requirement provides the economic disincentives to discourage asset owners from arbitrarily pushing the PBM time intervals out to up to 20 years without proper statistical data.

9.2 Frequently Asked Questions:

I'm a small entity and cannot aggregate a population of Protection System components to establish a segment required for a Performance-Based Protection System Maintenance Program. How can I utilize that opportunity?
Multiple asset owning entities may aggregate their individually owned populations of individual Protection System components to create a segment that crosses ownership boundaries. All entities participating in a joint program should have a single documented joint management process, with consistent Protection System Maintenance Programs (practices, maintenance intervals and criteria), for which the multiple owners are individually responsible with respect to the requirements of the Standard. The requirements established for performance-based maintenance must be met for the overall aggregated program on an ongoing basis.

The aggregated population should reflect all factors that affect consistent performance across the population, including any relevant environmental factors such as geography, power-plant vs. substation, and weather conditions.

Can an owner go straight to a performance-based maintenance program schedule, if they have previously gathered records?
Yes. An owner can go to a performance-based maintenance program immediately. The owner will need to comply with the requirements of a performance-based maintenance program as listed in the Standard. Gaps in the data collected will not be allowed; therefore, if an owner finds that a gap exists such that they cannot prove that they have collected the data as required for a performance-based maintenance program then they will need to wait until they can prove compliance.

When establishing a performance-based maintenance program, can I use test data from the device manufacturer, or industry survey results, as results to help establish a basis for my performance-based intervals?
No. You must use actual in-service test data for the components in the segment.

What types of misoperations or events are not considered countable events in the performance-based Protection System Maintenance (PBM) Program?
Countable events are intended to address conditions that are attributed to hardware failure or calibration failure; that is, conditions that reflect deteriorating performance of the component. These conditions include any condition where the device previously worked properly, then, due to changes within the device, malfunctioned.
For this purpose of tracking hardware issues, human errors resulting in Protection System misoperations during system installation or maintenance activities are not considered countable events. Examples of excluded human errors include relay setting errors, design errors, wiring errors, inadvertent tripping of devices during testing or installation, and misapplication of Protection System components. Examples of misapplication of Protection System components include wrong CT or PT tap position, protective relay function misapplication, and components not specified correctly for their installation. Obviously, if one is setting up relevant data about hardware failures then human failures should be eliminated from the hardware performance analysis.

One example of human-error is not pertinent data might be in the area of testing "86" Lock-Out Relays (LOR). "Entity A" has two types of LOR's type "X" and type "Y"; they want to move into a performance based maintenance interval. They have 1000 of each type, so the population variables are met. During electrical trip testing of all of their various schemes over the initial six-year interval they find zero type "X" failures, but human error led to tripping a BES element 100 times; they find 100 type "Y" failures and had an additional 100 human-error caused tripping incidents. In this example the human-error caused misoperations should not be used to judge the performance of either type of LOR. Analysis of the data might lead "Entity A" to change time intervals. Type "X" LOR can be placed into extended time interval testing because of its low failure rate (zero failures) while Type "Y" would have to be tested more often than every 6 calendar years (100 failures divided by 1000 units exceeds the 4% tolerance level).

Certain types of Protection System component errors that cause misoperations are not considered countable events. Examples of excluded component errors include device malfunctions that are correctable by firmware upgrades and design errors that do not impact protection function.

What are some examples of methods of correcting segment perfomance for Performance-Based Maintenance?
There are a number of methods that may be useful for correcting segment performance for mal-performing segments in a performance-based maintenance system. Some examples are listed below.

- The maximum allowable interval, as established by the performance-based maintenance system, can be decreased. This may, however, be slow to correct the performance of the segment.

- Identifiable sub-groups of components within the established segment, which have been identified to be the mal-performing portion of the segment, can be broken out as an independent segment for target action. Each resulting segment must satisfy the minimum population requirements for a performance-based maintenance program in order to remain within the program.
- Targeted corrective actions can be taken to correct frequently occurring problems. An example would be replacement of capacitors within electromechanical distance relays if bad capacitors were determined to be the cause of the mal-performance.
- Components within the mal-performing segment can be replaced with other components (electromechanical distance relays with microprocessor relays, for example) to remove the mal-performing segment.

If I find (and correct) a maintenance-correctable issue as a result of a misoperation investigation (Re: PRC-004), how does this affect my performance-based maintenance program?

If you perform maintenance on a Protection System component for any reason (including as part of a PRC-004 required misoperation investigation/corrective action), the actions performed can count as a maintenance activity, and, if you desire, "reset the clock" on everything you've done. In a performance-based maintenance program, you also need to record the maintenance-correctable issue with the relevant component group and use it in the analysis to determine your correct performance-based maintenance interval for that component group. Note that "resetting the clock" should not be construed as interfering with an entity's routine testing schedule because the "clock-reset" would actually make for a decreased time interval by the time the next routine test schedule comes around.

For example a relay scheme, consisting of 4 relays, is tested on 1-1-11 and the PSMP has a time interval of 3 calendar years with an allowable extension of 1 calendar year. The relay would be due again for routine testing before the end of the year 2015. This mythical relay scheme has a misoperation on 6-1-12 that points to one of the four relays as bad. Investigation proves a bad relay and a new one is tested and installed in place of the original. This replacement relay actually could be retested before the end of the year 2016 (clock-reset) and not be out of compliance. This requires tracking maintenance by individual relays and is allowed. However, many companies schedule maintenance in other ways like by substation or by circuit breaker or by relay scheme. By these methods of tracking maintenance that "replaced relay" will be retested before the end of the year 2015. This is also acceptable. In no case was a particular relay tested beyond the PSMP of 4 years max, nor was the 6 year max of the Standard exceeded. The entity can reset the clock if they desire or the entity can continue with original schedules and, in effect, test even more frequently.

Why are batteries excluded from PBM? What about exclusion of batteries from condition based maintenance?

Batteries are the only element of a Protection System that is a perishable item with a shelf life. As a perishable item batteries require not only a constant float charge to maintain their freshness (charge), but periodic inspection to determine if there are problems associated with their aging

process and testing to see if they are maintaining a charge or can still deliver their rated output as required.
Besides being perishable, a second unique feature of a battery that is unlike any other Protection System element is that a battery uses chemicals, metal alloys, plastics, welds, and bonds that must interact with each other to produce the constant dc source required for Protection Systems, undisturbed by ac system disturbances.

No type of battery manufactured today for Protection System application is free from problems that can only be detected over time by inspection and test. These problems can arise from variances in the manufacturing process, chemicals and alloys used in the construction of the individual cells, quality of welds and bonds to connect the components, the plastics used to make batteries and the cell forming process for the individual battery cells.

Other problems that require periodic inspection and testing can result from transportation from the factory to the job site, length of time before a charge is put on the battery, the method of installation, the voltage level and duration of equalize charges, the float voltage level used, and the environment that the battery is installed in.

All of the above mentioned factors and several more not discussed here are beyond the control of the Functional Entities that want to use a performance-based Protection System Maintenance (PBM) program. These inherent variances in the aging process of a battery cell make establishment of a designated segment based on manufacturer and type of battery impossible.

The whole point of PBM is that if all variables are isolated then common aging and performance criteria would be the same. However, there are too many variables in the electro-chemical process to completely isolate all of the performance-changing criteria.

Similarly Functional Entities that want to establish a condition-based maintenance program using the highest levels of monitoring; resulting in the least amount of hands-on maintenance activity, of the battery used in a station dc supply cannot completely eliminate some periodic maintenance. Inspection of the battery is required on a Maximum Maintenance Interval listed in the tables due to the aging processes of station batteries. However, higher degrees of monitoring of a battery can eliminate the requirement for some periodic testing and some inspections (see Table 1-4).

Please provide an example of the calculations involved in extending maintenance time intervals using PBM.
Entity has 1000 GE-HEA lock-out relays; this is greater than the minimum sample requirement of 60.

They start out testing all of the relays within the prescribed Table requirements (6 year max) by testing the relays every 5 years. The entity's plan is to test 200 units per year; this is greater than the minimum sample size requirement of 30.

For the sake of example only the following will show 6 failures per year, reality may well have different numbers of failures every year. PBM requires annual assessment of failures found per units tested.

After the first year of tests the entity finds 6 failures in the 200 units tested. 6/200= 3% failure rate.

This entity is now allowed to extend the maintenance interval if they choose.

The entity chooses to extend the maintenance interval of this population segment out to 10 years.

This represents a rate of 100 units tested per year; entity selects 100 units to be tested in the following year.

After that year of testing these 100 units the entity again finds 6 failed units. 6/100= 6% failures.

This entity has now exceeded the acceptable failure rate for these devices and must accelerate testing of all of the units at a higher rate such that the failure rate is found to be less than 4% per year; the entity has three years to get this failure rate down to 4% or less (per year).

In response to the 6% failure rate, the entity decreases the testing interval to 8 years. This means that they will now test 125 units per year (1000/8). The entity has just two years left to get the test rate corrected.

After a year they again find 6 failures out of the 125 units tested. 6/125= 5% failures.

In response to the 5% failure rate, the entity decreases the testing interval to 7 years. This means that they will now test 143 units per year (1000/7). The entity has just one year left to get the test rate corrected.

After a year they again find 6 failures out of the 143 units tested. 6/143= 4.2% failures.

(Note that the entity has tried 5 years and they were under the 4% limit and they tried 7 years and they were over the 4% limit. They must be back at 4% failures or less in the next year so they might simply elect to go back to 5 years.)

Instead, in response to the 5% failure rate, the entity decreases the testing interval to 6 years. This means that they will now test 167 units per year (1000/6).

After a year they again find 6 failures out of the 167 units tested. 6/167= 3.6% failures.

Entity found that they could maintain the failure rate at no more than 4% failures by maintaining the testing interval at 6 years or less. Entity chose 6 year interval and effectively extended their TBM (5 years) program by 20%.

A note of practicality is that an entity will probably be in better shape to lengthen the intervals between tests if the failure rate is less than 2%. But the requirements allow for annual adjustments if the entity desires. As a matter of maintenance management, an ever-changing test rate (units tested / year) may be un-workable.

Note that the “5% of components” requirement effectively sets a practical limit of 20 year maximum PBM interval. Also of note is the “3 years” requirement; this is there to prevent an

entity from “gaming the system”. An entity might arbitrarily extend time intervals from 6 years to 20 years. In the event that an entity finds a failure rate greater than 4% then the test rate must be accelerated such that within three years the failure rate must be brought back down to 4% or less.

Here is a table that demonstrates the values discussed:

Year #	Total Population (P)	Test Interval (I)	Units to be Tested (U= P/I)	# of Failures Found (F)	Failure Rate (=F/U)	Decision to Change Interval Yes or No	Interval Chosen
1	1000	5 yrs	200	6	3%	Yes	10 yrs
2	1000	10 yrs	100	6	6%	Yes	8 yrs
3	1000	8 yrs	125	6	5%	Yes	7 yrs
4	1000	7 yrs	143	6	4.2%	Yes	6 yrs
5	1000	6 yrs	167	6	3.6%	No	6 yrs

10. Overlapping the Verification of Sections of the Protection System

Tables 1-1 through 1-5 require that every protection system component be periodically verified. One approach, but not the only method, is to test the entire protection scheme as a unit, from the secondary windings of voltage and current sources to breaker tripping. For practical ongoing verification, sections of the protection system may be tested or monitored individually. The boundaries of the verified sections must overlap to ensure that there are no gaps in the verification. See Appendix A of this Supplementary Reference for additional discussion on this topic.

All of the methodologies expressed within this report may be combined by an entity, as appropriate, to establish and operate a maintenance program. For example, a protection system may be divided into multiple overlapping sections with a different maintenance methodology for each section:

- Time-based maintenance with appropriate maximum verification intervals for categories of equipment as given in the Tables 1-1 through 1-5;
- Monitoring as described in Tables 1-1 through 1-5;
- A performance-based maintenance program as described in Section 9 above or Attachment A of the Standard;
- Opportunistic verification using analysis of fault records as described in Section 11

10.1 Frequently Asked Question:

My system has alarms that are gathered once daily through an auto-polling system; this is not really a conventional SCADA system but does it meet the Table 1 requirements for inclusion as a monitored system?

Yes, provided the auto-polling that gathers the alarms reports those alarms to a location where the action can be initiated to correct the maintenance-correctable issue. This location does not have to be the location of the engineer or the technician that will eventually repair the problem, but rather a location where the action can be initiated.

11. Monitoring by Analysis of Fault Records

Many users of microprocessor relays retrieve fault event records and oscillographic records by data communications after a fault. They analyze the data closely if there has been an apparent misoperation, as NERC Standards require. Some advanced users have commissioned automatic fault record processing systems that gather and archive the data. They search for evidence of component failures or setting problems hidden behind an operation whose overall outcome seems to be correct. The relay data may be augmented with independently captured digital fault recorder (DFR) data retrieved for the same event.

Fault data analysis comprises a legitimate CBM program that is capable of reducing the need for a manual time-interval based check on protection systems whose operations are analyzed. Even electromechanical protection systems instrumented with DFR channels may achieve some CBM benefit. The completeness of the verification then depends on the number and variety of faults in the vicinity of the relay that produce relay response records, and the specific data captured.

A typical fault record will verify particular parts of certain protection systems in the vicinity of the fault. For a given protection system installation, it may or may not be possible to gather within a reasonable amount of time an ensemble of internal and external fault records that completely verify the protection system.

For example, fault records may verify that the particular relays that tripped are able to trip via the control circuit path that was specifically used to clear that fault. A relay or DFR record may indicate correct operation of the protection communications channel. Furthermore, other nearby protection systems may verify that they restrain from tripping for a fault just outside their respective zones of protection. The ensemble of internal fault and nearby external fault event data can verify major portions of the protection system, and reset the time clock for the Table 1 testing intervals for the verified components only.

What can be shown from the records of one operation is very specific and limited. In a panel with multiple relays, only the specific relay(s) whose operation can be observed without ambiguity should be used. Be careful about using fault response data to verify that settings or calibration are correct. Unless records have been captured for multiple faults close to either side of a setting boundary, setting or calibration could still be incorrect.
PMU data, much like DME data, can be utilized to prove various components of the Protection System. Obviously, care must be taken to attribute proof only to the parts of a Protection System that can actually be proven using the PMU or DME data.

If fault record data is used to show that portions or all of a protection system have been verified to meet Table 1 requirements, the owner must retain the fault records used, and the maintenance related conclusions drawn from this data and used to defer Table 1 tests, for at least the retention time interval given in Section 8.2.

11.1 Frequently Asked Question:

I use my protective relays for fault and disturbance recording, collecting oscillographic records and event records via communications for fault analysis to meet NERC and DME requirements. What are the maintenance requirements for the relays?

For relays used only as disturbance monitoring equipment, the NERC Standard PRC-018-1 R3 & R6 states the maintenance requirements, and is being addressed by a Standards activity that is revising PRC-002-1 and PRC-018-1. For protective relays "that are designed to provide protection for the BES," this Standard applies, even if they also perform DME functions.

12. Importance of Relay Settings in Maintenance Programs

In manual testing programs, many utilities depend on pickup value or zone boundary tests to show that the relays have correct settings and calibration. Microprocessor relays, by contrast, provide the means for continuously monitoring measurement accuracy. Furthermore, the relay digitizes inputs from one set of signals to perform all measurement functions in a single self-monitoring microprocessor system. These relays do not require testing or calibration of each setting.

However, incorrect settings may be a bigger risk with microprocessor relays than with older relays. Some microprocessor relays have hundreds or thousands of settings, many of which are critical to protection system performance.

Monitoring does not check measuring element settings. Analysis of fault records may or may not reveal setting problems. To minimize risk of setting errors after commissioning, the user should enforce strict settings data base management, with reconfirmation (manual or automatic) that the installed settings are correct whenever maintenance activity might have changed them. For background and guidance, see [5].

Table 1 requires that settings must be verified to be as specified. The reason for this requirement is simple. With legacy relays (non-microprocessor protective relays) it is necessary to know the value of the intended setting in order to test, adjust and calibrate the relay. Proving that the relay works per specified setting was the de facto procedure. However, with the advanced microprocessor relays it is possible to change relay settings for the purpose of verifying specific functions and then neglect to return the settings to the specified values. While there is no specific requirement to maintain a settings management process there remains a need to verify that the settings left in the relay are the intended, specified settings. This need may manifest itself after any of the following:

- One or more settings are changed for any reason.
- A relay fails and is repaired or replaced with another unit.
- A relay is upgraded with a new firmware version.

12.1 Frequently Asked Questions:

How do I approach testing when I have to upgrade firmware of a microprocessor relay?
The entity should ensure that the relay continues to function properly after implementation of firmware changes. Some entities may have a R&D department that might routinely run acceptance tests on devices with firmware upgrades before allowing the upgrade to be installed. Other entities may rely upon the vigorous testing of the firmware OEM. An entity has the latitude to install devices and/or programming that they believe will perform to their satisfaction. If an entity should choose to perform the maintenance activities specified in the Tables following

a firmware upgrade then they may, if they choose, reset the time clock on that set of maintenance activities so that they would not have to repeat the maintenance on its regularly scheduled cycle. (However, for simplicity in maintenance schedules, some entities may choose to not reset this time clock; it is merely a suggested option.)

If I upgrade my old relays then do I have to maintain my previous equipment maintenance documentation?

If an equipment item is repaired or replaced then the entity can restart the maintenance-activity-time-interval-clock if desired, however the replacement of equipment does not remove any documentation requirements. The requirements in the Standard are intended to ensure that an entity has a maintenance plan and that the entity adheres to minimum activities and maximum time intervals. The documentation requirements are intended to help an entity demonstrate compliance. For example, saving the dates and records of the last two maintenance activities is intended to demonstrate compliance with the interval. Therefore, if you upgrade or replace equipment then you still must maintain the documentation for the previous equipment, thus demonstrating compliance with the time interval requirement prior to the replacement action.

We have a number of installations where we have changed our Protection System components. Some of the changes were upgrades, but others were simply system rating changes that merely required taking relays "out-of-service". What are our responsibilities when it comes to "out-of-service" devices?

Assuming that your system up-rates, upgrades and overall changes meet any and all other requirements and standards then the requirements of PRC-005-2 are simple – if the Protection system component performs a Protection system function then it must be maintained. If the component no longer performs Protection System functions then it does not require maintenance activities under the Tables of PRC-005-2. While many entities might physically remove a component that is no longer needed there is no requirement in PRC-005-2 to remove such component(s). Obviously, prudence would dictate that an "out-of-service" device is truly made inactive. There are no record requirements listed in PRC-005-2 for Protection System components not used.

While performing relay testing of a protective device on our Bulk Electric System it was discovered that the protective device being tested was either broken or out of calibration. Does this satisfy the relay testing requirement even though the protective device tested bad, and may be unable to be placed back into service?

Yes, PRC-005-2 requires entities to perform relay testing on protective devices on a given maintenance cycle interval. By performing this testing, the entity has satisfied PRC-005-2 requirement although the protective device may be unable to be returned to service under normal calibration adjustments. R3 states (the entity must):

R3. Each Transmission Owner, Generator Owner, and Distribution Provider shall implement and follow its PSMP and initiate resolution of any identified maintenance correctable issues.

Also, when a failure occurs in a protection system, power system security maybe comprised, and notification of the failure must be conducted in accordance with relevant NERC Standards.

If I show the protective device out of service while it is being repaired then can I add it back as a new protective device when it returns? If not, my relay testing history would show that I was out of compliance for the last maintenance cycle.
The maintenance and testing requirements (R3) (in essence) state "…shall implement and follow its PSMP and initiate resolution of any identified maintenance correctable issues..." The type of corrective activity is not stated; however it could include repairs or replacements.

Your documentation requirements will increase, of course, to demonstrate that your device tested bad and had corrective actions initiated. Your regional entity could very well ask for documentation showing status of your corrective actions.

13. Self-Monitoring Capabilities and Limitations

Microprocessor relay proponents have cited the self-monitoring capabilities of these products for nearly 20 years. Theoretically, any element that is monitored does not need a periodic manual test. A problem today is that the community of manufacturers and users has not created clear documentation of exactly what is and is not monitored. Some unmonitored but critical elements are buried in installed systems that are described as self-monitoring.

To utilize the extended time intervals allowed by monitoring the user must document that the monitoring attributes of the device match the minimum requirements listed in the Table 1.
Until users are able to document how all parts of a system which are required for the protective functions are monitored or verified (with help from manufacturers), they must continue with the unmonitored intervals established in Table 1.

Going forward, manufacturers and users can develop mappings of the monitoring within relays, and monitoring coverage by the relay of user circuits connected to the relay terminals.

To enable the use of the most extensive monitoring (and never again have a hands-on maintenance requirement), the manufacturers of the microprocessor-based self-monitoring components in the protection system should publish for the user a document or map that shows:

- How all internal elements of the product are monitored for any failure that could impact protection system performance.
- Which connected circuits are monitored by checks implemented within the product; how to connect and set the product to assure monitoring of these connected circuits; and what circuits or potential problems are not monitored.

With this information in hand, the user can document monitoring for some or all sections by:

- Presenting or referencing the product manufacturer's documents.
- Explaining in a system design document the mapping of how every component and circuit that is critical to protection is monitored by the microprocessor product(s) or by other design features.
- Extending the monitoring to include the alarm transmission facilities through which failures are reported within a given time frame to allocate where action can be taken to initiate resolution of the alarm attributed to a maintenance correctable issue, so that failures of monitoring or alarming systems also lead to alarms and action.
- Documenting the plans for verification of any unmonitored components according to the requirements of Table 1.

13.1 Frequently Asked Question:

I can't figure out how to demonstrate compliance with the requirements for the highest level of monitoring of Protection Systems. Why does this Maintenance Standard describe a maintenance program approach I cannot achieve?

Demonstrating compliance with the requirements for the highest level of monitoring any particular component of Protection Systems is likely to be very involved, and may include detailed manufacturer documentation of complete internal monitoring within a device, comprehensive design drawing reviews, and other detailed documentation. This Standard does not presume to specify what documentation must be developed; only that it must be documented.

There may actually be some equipment available that is capable of meeting these highest levels of monitoring criteria, in which case it may be maintained according to the highest level of monitoring shown on the Tables. However, even if there is no equipment available today that can meet this level of monitoring; the Standard establishes the necessary requirements for when such equipment becomes available.

By creating a roadmap for development, this provision makes the Standard technology-neutral. The Standard Drafting Team wants to avoid the need to revise the Standard in a few years to accommodate technology advances that are maybe coming to the industry.

14. Notification of Protection System Failures

When a failure occurs in a protection system, power system security may be compromised, and notification of the failure must be conducted in accordance with relevant NERC Standard(s). Knowledge of the failure may impact the system operator's decisions on acceptable loading conditions.

This formal reporting of the failure and repair status to the system operator by the protection system owner also encourages the system owner to execute repairs as rapidly as possible. In some cases, a microprocessor relay or carrier set can be replaced in hours; wiring termination failures may be repaired in a similar time frame. On the other hand, a component in an electromechanical or early-generation electronic relay may be difficult to find and may hold up repair for weeks. In some situations, the owner may have to resort to a temporary protection panel, or complete panel replacement.

15. Maintenance Activities

Some specific maintenance activities are a requirement to ensure reliability. An example would be that a BES entity could be prudent in its protective relay maintenance but if its battery maintenance program is lacking then reliability could still suffer. The NERC glossary outlines a Protection System as containing specific components. PRC-005-2 requires specific maintenance activities be accomplished within a specific time interval. As noted previously, higher technology equipment can contain integral monitoring capability that actually performs maintenance verification activities routinely and often; therefore *manual intervention* to perform certain activities on these type components may not be needed.

15.1 Protective Relays (Table 1-1)

These relays are defined as the devices that receive the input signal from the current and voltage sensing devices and are used to isolate a faulted element of the BES. Devices that sense thermal, vibration, seismic, pressure, gas or any other non-electrical inputs are excluded.

Non-microprocessor based equipment is treated differently than microprocessor based equipment in the following ways, the relays should meet the asset owners' tolerances.

- Non-microprocessor devices must be tested with voltage and/or current applied to the device.
- Microprocessor devices may be tested through the integral testing of the device.
    - There is no specific protective relay commissioning test or relay routine test mandated.
    - There is no specific documentation mandated.

15.1.1 Frequently Asked Question:

What calibration tolerance should be applied on electromechanical relays?
Each entity establishes their own acceptable tolerances when applying protective relaying on their system. For some Protection System components, adjustment is required to bring measurement accuracy within the parameters established by the asset owner based on the specific application of the component. A calibration failure is the result if testing finds the specified parameters to be out of tolerance.

15.2 Voltage & Current Sensing Devices (Table 1-3)

These are the current and voltage sensing devices, usually known as instrument transformers. There is presently a technology available (fiber-optic Hall-effect) that does not utilize conventional transformer technology; these devices and other technologies that produce

quantities that represent the primary values of voltage and current are considered to be a type of voltage and current sensing devices included in this Standard.

The intent of the maintenance activity is to verify the input to the protective relay from the device that produces the current or voltage signal sample.

There is no specific test mandated for these components. The important thing about these signals is to know that the expected output from these components actually reaches the protective relay. Therefore, the proof of the proper operation of these components also demonstrates the integrity of the wiring (or other medium used to convey the signal) from the current and voltage sensing device all the way to the protective relay. The following observations apply.

- There is no specific ratio test, routine test or commissioning test mandated.
- There is no specific documentation mandated.
- It is required that the signal be present at the relay.
- This expectation can be arrived at from any of a number of means; by calculation, by comparison to other circuits, by commissioning tests, by thorough inspection, or by any means needed to verify the circuit meets the asset owner's protection system maintenance program.
- An example of testing might be a saturation test of a CT with the test values applied at the relay panel; this therefore tests the CT as well as the wiring from the relay all the back to the CT.
- Another possible test is to measure the signal from the voltage and/or current sensing devices, during load conditions, at the input to the relay.
- Another example of testing the various voltage and/or current sensing devices is to query the microprocessor relay for the real-time loading; this can then be compared to other devices to verify the quantities applied to this relay. Since the input devices have supplied the proper values to the protective relay then the verification activity has been satisfied. Thus event reports (and oscillographs) can be used to verify that the voltage and current sensing devices are performing satisfactorily.
- Still another method is to measure total watts and vars around the entire bus; this should add up to zero watts and zero vars thus proving the voltage and/or current sensing devices system throughout the bus.
- Another method for proving the voltage and/or current sensing devices is to complete commissioning tests on all of the transformers, cabling, fuses and wiring.
- Any other methods that provide documentation that the expected transformer values as applied to the inputs to the protective relays are acceptable.

15.2.1 Frequently Asked Questions:

What is meant by "…verify the current and voltage circuit inputs from the voltage and current sensing devices to the protective relays …" Do we need to perform ratio, polarity and saturation tests every few years?

No. You must verify that the protective relay is receiving the expected values from the voltage and current sensing devices (typically voltage and current transformers). This can be as difficult as is proposed by the question (with additional testing on the cabling and substation wiring to ensure that the values arrive at the relays); or simplicity can be achieved by other verification methods. While some examples follow, these are not intended to represent an all-inclusive list; technology advances and ingenuity should not be excluded from making comparisons and verifications:

- Compare the secondary values, at the relay, to a metering circuit, fed by different current transformers, monitoring the same line as the questioned relay circuit.

- Compare the individual phase secondary values at the relay panel (with additional testing on the panel wiring to ensure that the values arrive at those relays) with the other phases, and verify that residual currents are within expected bounds

- Observe all three phase currents and the residual current at the relay panel with an oscilloscope, observing comparable magnitudes and proper phase relationship, with additional testing on the panel wiring to ensure that the values arrive at the relays.

- Compare the values, as determined by the questioned relay (such as, but not limited to, a query to the microprocessor relay), to another protective relay monitoring the same line, with currents supplied by different CT's.

- Compare the secondary values, at the relay with values measured by test instruments (such as, but not limited to multi-meters, voltmeter, clamp-on ammeters, etc) and verified by calculations and known ratios to be the values expected. For example a single PT on a 100KV bus will have a specific secondary value that when multiplied by the PT ratio arrives at the expected bus value of 100KV.

- Query SCADA for the power flows at the far end of the line protected by the questioned relay, compare those SCADA values to the values as determined by the questioned relay.

- Totalize the Watts and VARs on the bus and compare the totals to the values as seen by the questioned relay.

The point of the verification procedure is to ensure that all of the individual components are functioning properly; and that, an ongoing proactive procedure is in place to re-check the various components of the protective relay measuring systems.

Is wiring insulation or hi-pot testing required by this Maintenance Standard?
No, wiring insulation and equipment hi-pot testing are not specifically required by the Maintenance Standard. However, if the method of verifying CT and PT inputs to the relay involves some other method than actual observation of current and voltage transformer secondary inputs to the relay, it might be necessary to perform some sort of cable integrity test to verify that the instrument transformer secondary signals are actually making it to the relay and not being shunted off to ground. For instance, you could use CT excitation tests and PT turns ratio tests and compare to baseline values to verify that the instrument transformer outputs are acceptable. However, to conclude that these acceptable transformer instrument output signals are actually making it to the relay inputs, it also would be necessary to verify the insulation of the wiring between the instrument transformer and the relay.

My plant generator and transformer relays are electromechanical and do not have metering functions as do microprocessor based relays. In order for me to compare the instrument transformer inputs to these relays to the secondary values of other metered instrument transformers monitoring the same primary voltage and current signals, it would be necessary to temporarily connect test equipment like voltmeters and clamp on ammeters to measure the input signals to the relays. This practice seems very risky and a plant trip could result if the technician were to make an error while measuring these current and voltage signals. How can I avoid this risk? Also, what if no other instrument transformers are available which monitor the same primary voltage or current signal?
Comparing the input signals to the relays to the outputs of other independent instrument transformers monitoring the same primary current or voltage is just one method of verifying the instrument transformer inputs to the relays but is not required by the Standard. Plants can choose how to best manage their risk. If online testing is deemed too risky, offline tests such as, but not limited to, CT excitation test and PT turns ratio tests can be compared to baseline data and be used in conjunction with CT and PT secondary wiring insulation verification tests to adequately "verify the current and voltage circuit inputs from the voltage and current sensing devices to the protective relays …" while eliminating the risk of tripping an in service generator or transformer. Similarly, this same offline test methodology can be used to verify the relay input voltage and current signals to relays when there are no other instrument transformers monitoring available for purposes of signal comparison.

15.3 Control circuitry associated with protective functions (Table 1-5)

This component of Protection Systems includes the trip coil(s) of the circuit breaker, circuit switcher or any other interrupting device. It includes the wiring from the batteries to the relays. It includes the wiring (or other signal conveyance) from every trip output to every trip coil. It includes any device needed for the correct processing of the needed trip signal to the trip coil of the interrupting device; this requirement is meant to capture inputs and outputs to and from a protective relay that are necessary for the correct operation of the protective functions. In short, every trip path must be verified; the method of verification is optional to the asset owner. An example of testing methods to accomplish this might be to verify, with a volt-meter, the existence of the proper voltage at the open contacts, the open circuited input circuit and at the trip coil(s). As every parallel trip path has similar failure modes, each trip path from relay to trip

coil must be verified. Each trip coil must be tested to trip the circuit breaker (or other interrupting device) at least once. There is a requirement to operate the circuit breaker (or other interrupting device) at least once every six years as part of the complete functional test. If a suitable monitoring system is installed that verifies every parallel trip path then the manual-intervention testing of those parallel trip paths can be eliminated, however the actual operation of the circuit breaker must still occur at least once every six years. This 6-year tripping requirement can be completed as easily as tracking the real-time fault-clearing operations on the circuit breaker or tracking the trip coil(s) operation(s) during circuit breaker routine maintenance actions.

The circuit-interrupting device should not be confused with a motor-operated disconnect. The intent of this Standard is to require maintenance intervals and activities on Protection Systems equipment and not just all system isolating equipment.

It is necessary, however, to classify a device that actuates a high-speed auto-closing ground switch as an interrupting device if this ground switch is utilized in a Protection System and forces a ground fault to occur that then results in an expected Protection System operation to clear the forced ground fault. The SDT believes that this is essentially a transferred-tripping device without the use of communications equipment. If this high-speed ground switch is "…designed to provide protection for the BES…" then this device needs to be treated as any other Protection System component. The control circuitry would have to be tested within 12 years and any electromechanically operated device will have to be tested every 6 years. If the spring-operated ground switch can be disconnected from the solenoid triggering unit then the solenoid triggering unit can easily be tested without the actual closing of the ground blade.

Circuit breakers that participate in a UFLS or UVLS scheme are excluded from the tripping requirement, but not from the circuit test requirements; however the circuitry must be tested at least once every 12 years. There are many circuit interrupting devices in the distribution system that will be operating for any given under-frequency event that requires tripping for that event. A failure in the tripping-action of a single distributed system circuit breaker will be far less significant than, for example, any single Transmission Protection System failure such as a failure of a bus differential lock-out Relay. While many failures of these distributed system circuit breakers could add up to be significant, it is also believed that many circuit breakers are operated often on just fault clearing duty and therefore these circuit breakers are operated at least as frequently as any requirements that appear in this Standard.

The dc control circuitry also includes each auxiliary tripping relay (94) and each lock-out relay (86) that may exist in any particular trip scheme. If these devices are electro-mechanical components then they must be trip tested. The PSMT SDT considers these components to share some similarities in failure modes as electro-mechanical protective relays; as such there is a six year maximum interval between mandated maintenance tasks unless PBM is applied.

Contacts of the 86 or 94 that pass the trip current on to the circuit interrupting device trip coils will have to be checked as part of the 12 year requirement. Normally-open contacts that are not used to pass a trip signal and normally-closed contacts do not have to be verified. Verification of the tripping paths is the requirement.

New technology is also accommodated here; there are some tripping systems that have replaced the traditional hard-wired trip circuitry with other methods of trip-signal conveyance such as fiber-optics. It is the intent of the PSMT SDT to include this, and any other, technology that is used to convey a trip signal from a protective relay to a circuit breaker (or other interrupting device) within this category of equipment.

15.3.1 Frequently Asked Questions:

Is it permissible to verify circuit breaker tripping at a different time (and interval) than when we verify the protective relays and the instrument transformers?
Yes, provided the entire Protective System is tested within the individual components' maximum allowable testing intervals.

The Protection System Maintenance Standard describes requirements for verifying the tripping of circuit breakers. What is this telling me about maintenance of circuit breakers?
Requirements in PRC-005-2 are intended to verify the integrity of tripping circuits, including the breaker trip coil, as well as the presence of auxiliary supply (usually a battery) for energizing the trip coil if a protection function operates. Beyond this, PRC-005-2 sets no requirements for verifying circuit breaker performance, or for maintenance of the circuit breaker.

How do I test each dc Control Circuit path, as established in Table 1-5 "Protection System Control Circuitry (Trip coils and auxiliary relays)"?
Table 1-5 specifies that each breaker trip coil, auxiliary relay that carries trip current to a trip coil, and lockout relays that carry trip current to a trip coil must be operated within the specified time period. The required operations may be via targeted maintenance activities, or by documented operation of these devices for other purposes such as fault clearing.

Are high-speed ground switch trip coils included in the dc control circuitry?
Yes. PRC-005-2 includes high-speed grounding switch trip coils within the dc control circuitry to the degree that the initiating Protection Systems are characterized as "transmission Protection Systems."

15.4 Batteries and DC Supplies (Table 1-4)

IEEE guidelines were consulted to arrive at the maintenance activities for batteries. The following guidelines were used: IEEE 450 (for Vented Lead-Acid batteries), IEEE 1188 (for Valve-Regulated Lead-Acid batteries) and IEEE 1106 (for Nickel-Cadmium batteries).

The currently proposed NERC definition of a Protection System is

- Protective relays which respond to electrical quantities,
- Communications systems necessary for correct operation of protective functions,
- Voltage and current sensing devices providing inputs to protective relays,

- Station dc supply associated with protective functions (including station batteries, battery chargers, and non-battery-based dc supply), and
- Control circuitry associated with protective functions through the trip coil(s) of the circuit breakers or other interrupting devices."
- The station battery is not the only component that provides dc power to a Protection System. In the new definition for Protection System "station batteries" are replaced with "station dc supply" to make the battery charger and dc producing stored energy devices (that are not a battery) part of the Protection System that must be maintained.

The PSMT SDT recognizes that there are several technological advances in equipment and testing procedures that allow the owner to choose how to verify that a battery string is free of open circuits. The term "continuity" was introduced into the Standard to allow the owner to choose how to verify continuity of a battery set by various methods, and not to limit the owner to the two methods recommended in the IEEE standards. Continuity as used in Table 1-4 of the Standard refers to verifying that there is a continuous current path from the positive terminal of the station battery set to the negative terminal. Without verifying continuity of a station battery, there is no way to determine that the station battery is available to supply dc power to the station. An open battery string will be an unavailable power source in the event of loss of the battery charger.

Batteries cannot be a unique population segment of a Performance-based Maintenance Program (PBM) because there are too many variables in the electro-chemical process to completely isolate all of the performance-changing criteria necessary for using PBM on battery systems. However, nothing precludes the use of a PBM process for any other part of a dc supply besides the batteries themselves.

15.4.1 Frequently Asked Questions:

What constitutes the station dc supply as mentioned in the definition of Protective System?
The previous definition of Protection System includes batteries, but leaves out chargers. The latest definition includes chargers as well as dc systems that do not utilize batteries. This revision of PRC-005-2 is intended to capture these devices that were not included under the previous definition. The station direct current (dc) supply normally consists of two components: the battery charger and the station battery itself. There are also emerging technologies that provide a source of dc supply that does not include either a battery or charger.

<u>Battery Charger</u> - The battery charger is supplied by an available ac source. At a minimum, the battery charger must be sized to charge the battery (after discharge) and supply the constant dc load. In many cases, it may be sized also to provide sufficient dc current to handle the higher energy requirements of tripping breakers and switches when actuated by the protective relays in the Protection System.

<u>Station Battery</u> - Station batteries provide the dc power required for tripping and for supplying normal dc power to the station in the event of loss of the battery charger. There are several technologies of battery that require unique forms of maintenance as established in Table 1-4.

Emerging Technologies - Station dc supplies are currently being developed that use other energy storage technologies beside the station battery to prevent loss of the station dc supply when ac power is lost. Maintenance of these station dc supplies will require different kinds of tests and inspections. Table 1-4 presents maintenance activities and maximum allowable testing intervals for these new station dc supply technologies. However, because these technologies are relatively new the maintenance activities for these station dc supplies may change over time.

What did the PSMT SDT mean by "continuity" of the dc supply?

The PSMT SDT recognizes that there are several technological advances in equipment and testing procedures that allow the owner to choose how to verify that a battery string is free of open circuits. The term "continuity" was introduced into the Standard to allow the owner to choose how to verify continuity of a battery set by various methods, and not to limit the owner to the two methods recommended in the IEEE standards. Continuity as used in Table 1-4 of the Standard refers to verifying that there is a continuous current path from the positive terminal of the station battery set to the negative terminal. Without verifying continuity of a station battery, there is no way to determine that the station battery is available to supply dc power to the station. An open battery string will be an unavailable power source in the event of loss of the battery charger.

The current path through a station battery from its positive to its negative connection to the dc control circuits is composed of two types of elements. These path elements are the electrochemical path through each of its cells and all of the internal and external metallic connections and terminations of the batteries in the battery set. If there is loss of continuity (an open circuit) in any part of the electrochemical or metallic path the battery set will not be available for service. In the event of the loss of the ac source or battery charger, the battery must be capable of supplying dc current, both for continuous dc loads and for tripping breakers and switches. Without continuity, the battery cannot perform this function.

At generating stations and large transmission stations where battery chargers are capable of handling the maximum current required by the Protection System, there are still problems that could potentially occur when the continuity through the connected battery is interrupted.

- Many battery chargers produce harmonics which can cause failure of dc power supplies in microprocessor based protective relays and other electronic devices connected to station dc supply. In these cases, the substation battery serves as a filter for these harmonics. With the loss of continuity in the battery, the filter provided by the battery is no longer present.

- Loss of electrical continuity of the station battery will cause, regardless of the battery charger's output current capability, a delayed response in full output current from the charger. Almost all chargers have an intentional 1 to 2 second delay to switch from a low substation dc load current to the maximum output of the charger. This delay would cause the opening of circuit breakers to be delayed which could violate system performance standards.

Monitoring of the station dc supply voltage will not indicate that there is a problem with the dc current path through the battery unless the battery charger is taken out of service. At that time a

break in the continuity of the station battery current path will be revealed because there will be no voltage on the station dc circuitry. This particular test method, while proving battery continuity, may not be acceptable to all installations.

Although the Standard prescribes what must be accomplished during the maintenance activity it does not prescribe how the maintenance activity should be accomplished. There are several methods that can be used to verify the electrical continuity of the battery. These are not the only possible methods, simply a sampling of some methods:

- One method is to measure that there is current flowing through the battery itself by a simple clamp on milliamp-range ammeter. A battery is always either charging or discharging. Even when a battery is charged there is still a measurable float charge current that can be detected to verify that there is continuity in the electrical path through the battery.

- A simple test for continuity is to remove the battery charger from service and verify that the battery provides voltage and current to the dc system. However, the behavior of the various dc-supplied equipment in the station should be considered before using this approach.

- Manufacturers of microprocessor controlled battery chargers have developed methods for their equipment to periodically (or continuously) test for battery continuity For example, one manufacturer periodically reduces the float voltage on the battery until current from the battery to the dc load can be measured to confirm continuity.

- Applying test current (as in some ohmic testing devices, or devices for locating dc grounds) will provide a current that when measured elsewhere in the string, will prove that the circuit is continuous.

- Internal ohmic measurements of the cells and units of Lead Acid Batteries (VRLA & VLA) can detect lack of continuity within the cells of a battery string and when used in conjunction with resistance measurements of the battery's external connections can prove continuity. Also some methods of taking internal ohmic measurements by their very nature can prove the continuity of a battery string without having to use the results of resistance measurements of the external connections.

- Specific Gravity tests can infer continuity because without continuity there could be no charging occurring and if there is no charging then Specific Gravity will go down below acceptable levels.

No matter how the electrical continuity of a battery set is verified it is a necessary maintenance activity that must be performed at the intervals prescribed by Table 1-4 to insure that the station dc supply has a path that can provide the required current to the Protection System at all times.

When should I check the station batteries to see if they have sufficient energy to perform as designed?

The answer to this question depends on the type of battery (valve regulated lead-acid, vented lead acid, or nickel-cadmium), and the maintenance activity chosen.
For example, if you have a Valve Regulated Lead-Acid (VRLA) station battery, and you have chosen to evaluate the measured cell/unit internal ohmic values to the battery cell's baseline, you will have to perform verification at a maximum maintenance interval of no greater than every six months. While this interval might seem to be quite short, keep in mind that the 6 month interval is consistent with IEEE guidelines for VRLA batteries; this interval provides an accumulation of data that better shows when a VRLA battery is no longer capable of its design capacity.

If, for a VRLA station battery, you choose to conduct a performance capacity test on the entire station battery as the maintenance activity, then you will have to perform verification at a maximum maintenance interval of no greater than every 3 calendar years.

How is a baseline established for cell/unit internal ohmic measurements?
Establishment of cell/unit internal ohmic baseline measurements should be completed when lead acid batteries are newly installed. To ensure that the baseline ohmic cell/unit values are most indicative of the station batteries ability to perform as designed they should be made upon installation of the station battery and the completion of a performance test of the battery's capacity.

When internal ohmic measurements are taken, the type of test equipment used to establish the baseline must be used for any future trending of the cells internal ohmic measurements because of variances in test equipment and the type of ohmic measurement used by different manufacturer's equipment.

For all new installations of Valve Regulated Lead-Acid (VRLA) batteries and Vented Lead-Acid (VLA) batteries, where trending of the cells internal ohmic measurements to a baseline are to be used to determine the ability of the station battery to perform as designed, the establishment of the baseline as described above should be followed at the time of installation to insure the most accurate trending of the cell/unit. However, often for older VLRA batteries the owners of the station batteries have not established a baseline at installation. Also for owners of VLA batteries who want to establish a maintenance activity which requires trending of measured ohmic values to a baseline, there was typically no baseline established at installation of the station battery to trend to.

To resolve the problem of the unavailability of baseline internal ohmic measurements for the individual cell/unit of a station battery, all manufacturers of internal ohmic measurement devices have established libraries of baseline values for VRLA and VLA batteries using their testing device. Also several of the battery manufacturers have libraries of baselines for their products that can be used to trend to. However it is important that when using battery manufacturer supplied data that it is verified that the baseline readings to be used were taken with the same ohmic testing device that will be used for future measurements.

Although the manufactures provided base line values which will allow trending of the internal ohmic measurements over the remaining life of a station battery, these baselines are not the actual cell/unit measurements for the battery being trended. It is important to have a baseline tailored to the station battery to more accurately use the tool of ohmic measurement trending. That more customized baseline can only be created by following the establishment of a baseline for each cell/unit at the time of installation of the station battery.

Why determine the State of Charge?
Even though there is no present requirement to check the state of charge of a battery, it can be a very useful tool in determining the overall condition of a battery system. The following discussions are offered as a general reference.

When a battery is fully charged the battery is available to deliver its existing capacity. As a battery is discharged its ability to deliver its maximum available capacity is diminished. It is necessary to determine if the state of charge has dropped to an unacceptable level.

IEEE Standards 450, 1188, and 1106 for vented lead-acid (VLA), valve-regulated lead-acid (VRLA), and nickel-cadmium (NiCd) batteries respectively discuss state of charge in great detail in their standards or annexes to their standards. The above IEEE standards are excellent sources for describing how to determine state of charge of the battery system.

What is State of Charge and how can it be determined in a station battery?
The state of charge of a battery refers to the ratio of residual capacity at a given instant to the maximum capacity available from the battery. When a battery is fully charged the battery is available to deliver its existing capacity. As a battery is discharged its ability to deliver its maximum available capacity is diminished. Knowing the amount of energy left in a battery compared with the energy it had when it was fully charged gives the user an indication of how much longer a battery will continue to perform before it needs recharging.

For Vented Lead-Acid (VLA) batteries which use accessible liquid electrolyte, a hydrometer can be used to test the specific gravity of each cell as a measure of its state of charge. The hydrometer depends on measuring changes in the weight of the active chemicals. As the battery discharges the active electrolyte, sulphuric acid, is consumed and the concentration of the sulphuric acid in water is reduced. This in turn reduces the specific gravity of the solution in direct proportion to the state of charge. The actual specific gravity of the electrolyte can therefore be used as an indication of the state of charge of the battery. Hydrometer readings may not tell the whole story, as it takes a while for the acid to get mixed up in the cells of a VLA battery. If measured right after charging, you might see high specific gravity readings at the top of the cell, even though it is much less at the bottom. Conversely if taken shortly after adding water to the cell the specific gravity readings near the top of the cell will be lower than those at the bottom.

Nickel-cadmium batteries, where the specific gravity of the electrolyte does not change during battery charge and discharge, and Valve Regulated Lead-Acid (VRLA) batteries, where the electrolyte is not accessible, cannot have their state of charge determined by specific gravity readings. For these two types of batteries and also for VLA batteries, where another method besides taking hydrometer readings is desired, the state of charge may be determined by using the battery charger and taking voltage and current readings during float and equalize (high-rate charge mode). This method is an effective means of determining when the state of charge is low and when it is approaching a fully charged condition which gives the assurance that the available battery capacity will be maximized.

Why determine the Connection Resistance?
High connection resistance can cause abnormal voltage drop or excessive heating during discharge of a station battery. During periods of a high rate of discharge of the station battery a very high resistance can cause severe damage. The maintenance requirement to verify battery terminal connection resistance in table 1-4 is established to verify that the integrity of all battery electrical connections is acceptable. This verification includes cell-to-cell (intercell) and external circuit terminations.

Adequacy of the electrical terminations can be determined by comparing resistance measurements for all connections taken at the time of station battery's installation to the same resistance measurements taken at the maintenance interval chosen not to exceed the maximum maintenance interval of table 1-4. Trending of the interval measurements to the baseline measurements will identify any degradation in the battery connections. When the connection resistance values exceed the acceptance criteria for the connection, the connection is typically disassembled, cleaned, reassembled and measurements taken to verify that the measurements are adequate when compared to the baseline readings.

IEEE Standard 450 for vented lead-acid (VLA) batteries "informative" annex F, and IEEE Standard 1188 for valve-regulated lead-acid (VRLA) batteries "informative" annex D provide excellent information and examples on performing connection resistance measurements using a microohmmeter and connection detail resistance measurements. Although this information is contained in standards for lead acid batteries the information contained is applicable to nickel-cadmium batteries also.

What conditions should be inspected for visible battery cells?
The maintenance requirement to inspect the cell condition of all station battery cells where the cells are visible is a maintenance requirement of table 1-4. Station batteries are different from any other component in the Protection Station because they are a perishable product due to the electro-chemical process which is used to produce dc electrical current and voltage. This inspection is a detailed visual inspection of the cells for abnormalities that occur in the aging process of the cell. In VLA battery visual inspections, some of the things that the inspector is typically looking on the plates are signs of sulfation of the plates, abnormal color (possible copper contamination) and abnormal conditions such as cracked grids. The visual inspection could look for symptoms of hydration that would indicate that the battery has been left in a completely discharged state for a prolonged period. Besides looking at the plates for signs of aging, all internal connections such as the bus bar connection to each plate and the connections to all posts of the battery need to be visually inspected for abnormalities. In a complete visual inspection for the condition of the cell the cell plates, separators and sediment space of each cell must be looked at for signs of deterioration. An inspection of the station battery's cell condition also includes looking at all terminal posts and cell-to-cell electric connections to ensure they are corrosion free. The case of the battery containing the cell or cells must be inspected for cracks and electrolyte leaks through cracks and the post seals.

This maintenance activity cannot be extended beyond the maximum maintenance interval of table 1-4 by a Performance-based Maintenance Program (PBM) because of the electro-chemical aging process of the station battery nor can there be any monitoring associated with it because

there must be a visual inspection involved in the activity. A remote visual inspection could possibly be done, but its interval must be no greater than the maximum maintenance interval of table 1-4.

Why consider the ability of the station battery to perform as designed?
Determining the ability of a station battery to perform as designed is critical in the process of determining when the station battery must be replaced or when an individual cell or battery unit must be removed or replaced. For lead acid batteries the ability to perform as designed can be determined in more than one manner.

The two acceptable methods for proving that a station lead acid battery can perform as designed are based on two different philosophies. The first maintenance activity requires tests and evaluation of the internal ohmic measurements on each of the individual cells/units of the station battery to determine that each component can perform as designed and therefore the entire station battery can be verified to perform as designed. The second activity requires a capacity discharge test of the entire station battery to verify that degradation of one or several components (cells) in the station battery has not deteriorated to a point where the total capacity of the station battery system falls below its designed rating.

The first maintenance activity listed in Table 1-4 for verifying that a station battery can perform as designed uses maximum maintenance intervals for evaluating internal ohmic measurements in relation to their baseline measurements that are based on industry experience, EPRI technical reports and application guides, and the IEEE battery standards. By evaluating the internal ohmic measurements for each cell and comparing that measurement to the cell's baseline ohmic measurement low-capacity cells can be identified and eliminated or the whole station battery replaced to keep the station battery capable of performing as designed. Since the philosophy behind internal ohmic measurement evaluation is based on the fact that each battery component must be verified to be able to perform as designed, the interval for verification by this maintenance activity must be shorter to catch individual cell/unit degradation.

It should be noted that even if a lead acid battery unit is composed of multiple cells where the ohmic measurement of each cell cannot be taken, the ohmic test can still be accomplished. The data produced becomes trending data on the multi-cell unit instead of trending individual cells. Care must be taken in the evaluation of the ohmic measures of entire units to detect a bad cell that has a poor ohmic value. Good ohmic values of other cells in the same battery unit can make it harder to detect the poor ohmic measurement of a bad cell because the only ohmic measurement available is of all the cells in the battery unit.

This first maintenance activity is applicable only for Vented Lead-Acid (VLA) and Valve Regulated Lead-Acid (VRLA) batteries; this trending activity has not shown to be effective for NiCd batteries thus the only choices for owners of NiCd batteries are the performance tests of the second activity (see applicable IEEE guideline for specifics on performance tests).

The second maintenance activity listed in Table 1-4 for verifying that a station battery can perform as designed uses maximum maintenance intervals for capacity testing that were

designed to align with the IEEE battery standards. This maintenance activity is applicable for vented lead-acid, valve-regulated lead-acid, and nickel-cadmium batteries.
The maximum maintenance interval for discharge capacity testing is longer than the interval for testing and evaluation of internal ohmic cell measurements. An individual component of a station battery may degrade to an unacceptable level without causing the total station battery to fall below its designed rating under capacity testing.

IEEE Standards 450, 1188, and 1106 for vented lead-acid (VLA), valve-regulated lead-acid (VRLA), and nickel-cadmium (NiCd) batteries respectively (which together are the most commonly used substation batteries on the BES) go into great detail about capacity testing of the entire battery set to determine that a battery can perform as designed or needs to be replaced soon.

Why in Table 1-4 of PRC-005-2 is there a maintenance activity to inspect the structural intergrity of the battery rack?
The three IEEE standards (1188, 450, and 1106) for VRLA, vented lead-acid, and nickel-cadmium batteries all recommend that as part of any battery inspection the battery rack should be inspected. The purpose of this inspection is to verify that the battery rack is correctly installed and has no deterioration that could weaken its structural integrity.
Because the battery rack is specifically designed for the battery that is mounted on it, weakening of its structural members by rust or corrosion can physically jeopardize the battery.

What is required to comply with the "Unintentional dc Grounds" requirement?
In most cases, the first ground that appears on a battery is not a problem. It is the unintentional ground that appears on the opposite pole that becomes problematic. Even then many systems are designed to operate favorably under some unintentional DC ground situations. It is up to the owner of the Protection System to determine if corrective actions are needed on detected unintentional DC grounds. The Standard merely requires that a check be made for the existence of Unintentional DC Grounds. Obviously a "check-off" of some sort will have to be devised by the inspecting entity to document that a check is routinely done for Unintentional DC Grounds because to the possible consequences to the Protection System.

Where the Standard refers to "all cells" is it sufficient to have a documentation method that refers to "all cells" or do we need to have separate documentation for every cell? For example to I need 60 individual documented check-offs for good electrolyte level or would a single check-off per bank be sufficient?
A single check-off per battery bank is sufficient for documentation, as long as the single check-off attests to checking all cells/units.

Does this Standard refer to Station batteries or all batteries, for example Communications Site Batteries?
This Standard refers to Station Batteries. The drafting team does not believe that the scope of this Standard refers to communications sites. The batteries covered under PRC-005-2 are the batteries that supply the trip current to the trip coils of the interrupting devices that are a part of the Protection System. The SDT believes that a loss of power to the communications systems at

a remote site would cause the communications systems associated with protective relays to alarm at the substation. At this point the corrective actions can be initiated.

My VRLA batteries have multiple-cells within an individual battery jar (or unit); how am I expected to comply with the cell-to-cell ohmic measurement requirements on these units that I cannot get to?

Measurement of cell/unit (not all batteries allow access to "individual cells" some "units" or jars may have multiple cells within a jar) internal ohmic values of all types of lead acid batteries where the cells of the battery are not visible is a station dc supply maintenance activity in table 1-4.

What are cell/unit internal ohmic measurements?

With the introduction of Valve Regulated Lead Acid (VRLA) batteries to station dc supplies in the 1980's several of the standard maintenance tools that are used on Vented Lead-Acid (VLA) batteries were unable to be used on this new type of lead-acid battery to determine its state of health. The only tools that were available to give indication of the health of these new VRLA batteries were voltage readings of the total battery voltage, the voltage of the individual cells and periodic discharge tests.

In the search for a tool for determining the health of a VRLA battery several manufacturers studied the electrical model of a lead acid battery's current path through its cell. The overall battery current path consists of resistance and inductive and capacitive reactance. The inductive reactance in the current path through the battery is so minuscule when compared to the huge capacitive reactance of the cells that it is often ignored in most circuit models of the battery cell. Taking the basic model of a battery cell manufacturers of battery test equipment have developed and marketed testing devices to take measurements of the current path to detect degradation in the internal path through the cell.

In the battery industry these various types of measurements are referred to as ohmic measurements. Terms used by the industry to describe ohmic measurements are ac conductance, ac impedance, and dc resistance. They are defined by the test equipment providers and IEEE and refer to the method of taking ohmic measurements of a lead acid battery. For example in one manufacturer's ac conductance equipment measurements are taken by applying a voltage of a known frequency and amplitude across a cell or battery unit and observing the ac current flow it produces in response to the voltage. A manufacture of an ac impedance meter measures ac current of a known frequency and amplitude that is passed through the whole battery string and determines the impedances of each cell or unit by measuring the resultant ac voltage drop across them. On the other hand dc resistance of a cell is measured by a third manufacture's equipment by applying a dc load across the cell or unit and measuring the step change in both the voltage and current to calculate the internal dc resistance of the cell or unit.

It is important to note that because of the rapid development of the market for ohmic measurement devices there were no standards developed or used to mandate the test signals used in making ohmic measurements. Manufacturers using proprietary methods and applying different frequencies and magnitudes for their signals have developed a diversity of measurement devices. This diversity in test signals coupled with the three different types of ohmic

measurements techniques (impedance conductance and resistance) make it impossible to get the same ohmic measurement for a cell with different ohmic measurement devices. However, IEEE has recognized the great value for choosing one device for ohmic measurement, no matter who makes it or the method to calculate the ohmic measurement. The only caution given by IEEE and the battery manufacturers is that when trending the cells of a lead acid station battery the same ohmic measurement device must be used to establish the baseline measurement and to trend the battery set for its entire life.

For VRLA batteries both IEEE Standard 1188 (maintenance, testing and replacement of VRLA batteries) and IEEE Standard 1187 (Installation Design and Installation of VRLA Batteries) recognize the importance of the maintenance activity of establishing a baseline for "cell/unit internal ohmic measurements" and trending them at frequent intervals over the life of the battery. There are extensive discussions about the need for taking these measurements in these standards. IEEE Standard 1188 requires taking internal ohmic values as described in Annex C4 during regular inspections of the station battery. For VRLA batteries IEEE Standard 1188 in talking about the necessity of establishing a base line and trending it over time says, "depending on the degree of change a performance test, cell replacement or other corrective action may be necessary.

For VLA batteries IEEE Standard 484 (Installation of VLA batteries) gives several guide lines about establishing baseline measurements on newly installed lead acid stationary batteries. The standard also discusses the need to look for significant changes in the ohmic measurements, the caution that measurement data will differ with each type of model of instrument used, and lists a number of factors that affect ohmic measurements.

At the beginning of the 21st century EPRI conducted a series of extensive studies to determine the relationship of internal ohmic measurements to the capacity of a lead acid battery cell. The studies indicated that internal ohmic measurements were in fact a good indicator of a lead acid battery cell's capacity but because users often were only interested in the total station battery capacity and the technology does not precisely predict overall battery capacity, if a user only needs "an accurate measure of the overall battery capacity" they should "perform a battery capacity test."

Prior to the EPRI studies some large and small companies which owned and maintained station dc supplies in NERC Protection Systems developed maintenance programs where trending of ohmic measurements of cells/units of the station's battery became the maintenance activity for determining if the station battery could perform as designed. By evaluation of the trending of the ohmic measurements over time the owner could track the performance of the individual components of the station battery and determine if a total station battery or components of it required capacity testing, removal, replacement or in many instances replacement of the entire station battery. By taking this approach these owners have eliminated having to perform capacity testing at prescribed intervals to determine if a battery needs to be replaced and are still able to effectively determine if a station battery can perform as designed.

Why verify voltage?
There are two required maintenance activities associated with verification of dc voltages in table 1-4. These two required activities are to verify station dc supply voltage and float voltage of the battery charger, and have different maximum maintenance intervals. Both of these voltage verification requirements relate directly to the battery charger maintenance.

The verification of the dc supply voltage is simply an observation of battery voltage to prove that the charger has not been lost or is not malfunctioning. Low battery voltage below float voltage indicates that the battery may be on discharge and if not corrected the station battery could discharge down to some extremely low value that will not operate the Protection System. High voltage, close to or above the maximum allowable dc voltage for equipment connected to the station dc supply indicates the battery charger may be malfunctioning by producing high dc voltage levels on the Protection System. If corrective actions are not taken to bring the high voltage down, the dc power supplies and other electronic devices connected to the station dc supply may be damaged. The maintenance activity of verifying the float voltage of the battery charger is not to prove that a charger is lost or producing high voltages on the station dc supply, but rather to prove that the charger is properly floating the battery within the proper voltage limits.

Why check for the electrolyte level?
In Vented Lead Acid (VLA) and Nickel-Cadmium (NiCd) batteries the visible electrolyte level must be checked as one of the required maintenance activities that must be performed at an interval that is equal to or less than the maximum maintenance interval of table 1-4. Because the electrolyte level in Valve Regulated Lead Acid (VRLA) batteries cannot be observed there is no maintenance activity listed in table 1-4 of the Standard for checking the electrolyte level.
Low electrolyte level of any cell of a VLA or NiCd station battery is a condition requiring correction. Typically the electrolyte level should be returned to an acceptable level for both types of batteries (VLA and NiCd) by adding distilled or other approved-quality water to the cell.

Often people confuse the interval for watering all cells required due to evaporation of the electrolyte in the station battery cells with the maximum maintenance interval required to check the electrolyte level. In many of the modern station batteries the jar containing the electrolyte is so large with the band between the high and low electrolyte level so wide that normal evaporation which would require periodic watering of all cells takes several years to occur. However, because loss of electrolyte due to cracks in the jar, overcharging of the station battery or other unforeseen events can cause rapid loss of electrolyte the shorter maximum maintenance intervals for checking the electrolyte level are required. A low level of electrolyte in a VLA battery cell which exposes the tops of the plates can cause the exposed portion of the plates to accelerated sulfation resulting in loss of cell capacity. Also, in a VLA battery where the electrolyte level goes below the end of the cell withdrawal tube or filling funnel, gasses can exit the cell by the tube instead of the flame arrester and present an explosion hazard.

Why does it appear that there are two maintenance activities in table 1-4(b) (for VRLA batteries) that appear to be the same activity and have the same maximum maintenance interval?
There are two different and distinct reasons for doing almost the same maintenance activity at the same interval for Valve Regulated Lead-Acid (VRLA) batteries. The first similar activity for

VRLA batteries (table 1-4(b)) that has the same maximum maintenance interval is to "measure battery cell/unit internal ohmic values." Part of the reason for this activity is because the visual inspection of the cell condition is unavailable for VRLA batteries. Besides the requirement to measure the internal ohmic measurements of VRLA batteries to determine the internal health of the cell, the maximum maintenance interval for this activity is significantly shorter than the interval for Vented Lead Acid (VLA) due to some unique failure modes for VRLA batteries. Some of the potential problems that VRLA batteries are susceptible to that do not affect VLA batteries are thermal runaway, cell dry-out, and cell reversal when one cell has a very low capacity.

The other similar activity listed in table 1-4(b) is "verify that the station battery can perform as designed by evaluating the measured cell/unit internal ohmic values to station battery baseline." This activity allows an owner the option to choose between this activity with its much shorter maximum maintenance interval or the longer maximum maintenance interval for the maintenance activity to "Verify that the station battery can perform as designed by conducting a performance, service, or modified performance capacity test of the entire battery bank."

For VRLA batteries, there are two drivers for internal ohmic readings. The first driver is for a means to trend battery life. A comparison and trending against the baseline new battery ohmic reading can be used in lieu of capacity tests to determine remaining battery life. Remaining battery life is analogous to stating that the battery is still able to "perform as designed". This is the intent of the "capacity 6 month test" at Row 4 on Table 1-4b.

The second big driver is VRLA batteries tendency for thermal runaway. This is the intent of the "thermal runaway test" at Row 2 on Table 1-4b. In order to detect a cell in thermal runaway, you need not have a formal trending program to track when a cell has reached a 25% increase over baseline. Rather it will stick out like a sore thumb when compared to the other cells in a string at a given point in time regardless of the age of all the cells in a string. In other words, if the battery is 10 years old and all the cells are gradually approaching a 25% increase in ohmic values over baseline, then you have a battery which is approaching end of life. You need to get ready to buy a new battery but you do not have to worry about an impending catastrophic failure. On the other hand, if the battery is five years old and you have one cell that has a markedly different ohmic reading than all the other cells, then you need to be worried that this cell is in thermal runaway and catastrophic failure is imminent.

If an entity elects to use a capacity test rather than a cell ohmic value trending program, this does not eliminate the need to be concerned about thermal runaway – the entity still needs to do the 6 month readings and look for cells which are outliers in the string but they need not trend results against the factory/as new baseline. Some entities will not mind the extra administrative burden of having the ongoing trending program against baseline - others would rather just do the capacity test and not have to trend the data against baseline. Nonetheless, all entities must look for ohmic outliers on a 6 month basis.

It is possible to accomplish both tasks listed (trend testing for capacity and testing for thermal runaway candidates) with the very same ohmic test. It becomes an analysis exercise of watching the trend from baselines and watching for the oblique cell measurement.

15.5 Associated communications equipment (Table 1-2)

The equipment used for tripping in a communications assisted trip scheme is a vital piece of the trip circuit. Remote action causing a local trip can be thought of as another parallel trip path to the trip coil that must be tested.

Besides the trip output and wiring to the trip coil(s) there is also a communications medium that must be maintained.
Newer technologies now exist that achieve communications-assisted tripping without the conventional wiring practices of older technology.

For example: older technologies may have included *Frequency Shift Key* methods. This technology requires that guard and trip levels be maintained.

The actual tripping path(s) to the trip coil(s) may be tested as a parallel trip path within the dc control circuitry tests.

Emerging technologies transfer digital information over a variety of carrier mediums that are then interpreted locally as trip signals.

The requirements apply to the communicated signal needed for the proper operation of the protective relay trip logic or scheme. Therefore this Standard is applied to equipment used to convey both trip signals (permissive or direct) and block signals.

It was the intent of this Standard to require that a test be made of any communications-assisted trip scheme regardless of the vintage of the technology. The essential element is that the tripping (or blocking) occurs locally when the remote action has been asserted; or that the tripping (or blocking) occurs remotely when the local action is asserted.

Some newer installations utilize digital signals over fiber-optics from the protective relays in the control house to the circuit interrupting device in the yard. This method of tripping the circuit breaker, even though it might be considered communications, must be maintained per the dc control circuitry maintenance requirements.

15.5.1 Frequently Asked Questions:

What are some examples of mechanisms to check communications equipment functioning?
For unmonitored Protection Systems, various types of communications systems will have different facilities for on-site integrity checking to be performed at least every three months during a substation visit. Some examples are, but not limited to:

- On-off power-line carrier systems can be checked by performing a manual carrier keying test between the line terminals, or carrier check-back test from one terminal.
- Systems which use frequency-shift communications with a continuous guard signal (over a telephone circuit, analog microwave system, etc.) can be checked by observing for a

loss-of-guard indication or alarm. For frequency-shift power-line carrier systems, the guard signal level meter can also be checked.

- Hard-wired pilot wire line Protection Systems typically have pilot-wire monitoring relays that give an alarm indication for a pilot wire ground or open pilot wire circuit loop.
- Digital communications systems typically have a data reception indicator or data error indicator (based on loss of signal, bit error rate, or frame error checking).

For monitored Protection Systems, various types of communications systems will have different facilities for monitoring the presence of the communications channel, and activating alarms that can be monitored remotely. Some examples are, but not limited to:

- On-off power-line carrier systems can be shown to be operational by automated periodic power-line carrier check-back tests, with remote alarming of failures.
- Systems which use a frequency-shift communications with a continuous guard signal (over a telephone circuit, analog microwave system, etc.) can be remotely monitored with a loss-of-guard alarm or low signal level alarm.
- Hard-wired pilot wire line Protection Systems can be monitored by remote alarming of pilot-wire monitoring relays.
- Digital communications systems can activate remotely monitored alarms for data reception loss or data error indications.
- Systems can be queried for the data error rates.

For the highest degree of monitoring of Protection Systems, the communications system must monitor all aspects of the performance and quality of the channel that show it meets the design performance criteria, including monitoring of the channel interface to protective relays.

- In many communications systems signal quality measurements including signal-to-noise ratio, received signal level, reflected transmitter power or standing wave ratio, propagation delay, and data error rates are compared to alarm limits. These alarms are connected for remote monitoring.
- Alarms for inadequate performance are remotely monitored at all times, and the alarm communications system to the remote monitoring site must itself be continuously monitored to assure that the actual alarm status at the communications equipment location is continuously being reflected at the remote monitoring site.

What is needed for the 3-month inspection of communications-assisted trip scheme equipment?

The 3-month inspection applies to unmonitored equipment. An example of compliance with this requirement might be, but is not limited to:

With each site visit, check that the equipment is free from alarms, check any metered signal levels, and that power is still applied. While this might be explicit for a particular type of equipment (i.e. FSK equipment), the concept should be that the entity verify that the communications equipment that is used in a Protection System is operable through a cursory

inspection and site visit. This site visit can be eliminated on this particular example if the FSK equipment had a monitored alarm on Loss of Guard.

Does a fiber optic I/O scheme used for breaker tripping or control within a station, for example - transmitting a trip signal or control logic between the control house and the breaker control cabinet, constitute a communications system?

This equipment is presently classified as being part of the Protection System Control Circuitry and tested per the portions of Table 1 applicable to Protection System Control Circuitry rather than those portions of the table applicable to communications equipment.

In Table 1-2, the Maintenance Activities section of the Protective System Communications Equipment and Channels refers to the quality of the channel meeting "performance criteria". What is meant by performance criteria?

Protection System communications channels must have a means of determining if the channel and communications equipment is operating normally. If the channel is not operating normally an alarm will be indicated. For unmonitored systems this alarm will probably be on the panel. For monitored systems, the alarm will be transmitted to a remote location.

Each entity will have established a nominal performance level for each protective system communications channel that is consistent with proper functioning of the Protection System. If that level of nominal performance is not being met, the system will go into alarm. Following are some examples of protective system communications channel performance measuring:

- For direct transfer trip using a frequency shift power line carrier channel, a guard level monitor is part of the equipment. A normal receive level is established when the system is calibrated and if the signal level drops below an established level, the system will indicate an alarm.
- An on-off blocking signal over power line carrier is used for directional comparison blocking schemes on transmission lines. During a fault, block logic is sent to the remote relays by turning on a local transmitter and sending the signal over the power line to a receiver at the remote end. This signal is normally off so continuous levels cannot be checked. These schemes use check-back testing to determine channel performance. A predetermined signal sequence is sent to the remote end and the remote end decodes this signal and sends a signal sequence back. If the sending end receives the correct information from the remote terminal, the test passes and no alarm is indicated. Full power and reduced power tests are typically run. Power levels for these tests are determined at the time of calibration.
- Pilot wire relay systems use a hardwire communications circuit to communicate between the local and remote ends of the protective zone. This circuit is monitored by circulating a dc current between the relay systems. A typical level may be 1 mA. If the level drops below the setting of the alarm monitor, the system will indicate an alarm.
- Modern digital relay systems use data communications to transmit relay information to the remote end relays. An example of this is a line current differential scheme commonly used on transmission lines. The protective relays communicate current magnitude and phase information over the communications path to determine if the fault is located in the

protective zone. Quantities such as digital packet loss, bit error rate and channel delay are monitored to determine the quality of the channel. These limits are determined and set during relay commissioning. Once set, any channel quality problems that fall outside the set levels will indicate an alarm.

The previous examples show how some protective relay communications channels can be monitored and how the channel performance can be compared to performance criteria established by the entity. This Standard does not state what the performance criteria will be - it just requires that the entity establish nominal criteria so protective system channel monitoring can be performed.

How is the performance criteria of Protection System communications equipment involved in the maintenance program?
An entity determines the acceptable performance criteria depending on the technology implemented. If the communications channel performance of a Protection System varies from the pre-determined performance criteria for that system then these results should be investigated and resolved.

How do I verify the A/D converters of microprocessor-based relays?
There are a variety of ways to do this. Two examples would be: using values gathered via data communications and automatically comparing these values with values from other sources, or using groupings of other measurements (such as vector summation of bus feeder currents) for comparison. Many other methods are possible.

15.6 Alarms (Table 2)

In addition to the tables of maintenance for the components of a Protection System, there is an additional table added for alarms. This additional table was added for clarity. This enabled the common alarm attributes to be consolidated into a single spot and thus make it easier to read the Tables 1-1 through 1-5. The alarms need to arrive at a site wherein a corrective action can be initiated. This could be a control room, operations center, etc. The alarming mechanism can be a Standard alarming system or an auto-polling system, the only requirement is that the alarm be brought to the action-site within 24 hours. This effectively makes manned-stations equivalent to monitored stations. The alarm of a monitored point (for example a monitored trip path with a lamp) in a manned-station now makes that monitored point eligible for monitored status. Obviously, these same rules apply to a non-manned-station, which is that if the monitored point has an alarm that is auto-reported to the operations center (for example) within 24 hours then it too is considered monitored.

15.6.1 Frequently Asked Question:

Why are there activities defined for varying degrees of monitoring a Protection System component when that level of technology may not yet be available?
There may already be some equipment available that is capable of meeting the highest levels of monitoring criteria listed in the Tables. However, even if there is no equipment available today that can meet this level of monitoring the Standard establishes the necessary requirements for

when such equipment becomes available. By creating a roadmap for development, this provision makes the Standard technology-neutral. The Standard Drafting Team wants to avoid the need to revise the Standard in a few years to accommodate technology advances that may be coming to the industry.

15.7 Examples of Evidence of Compliance

To comply with the requirements of this Standard an entity will have to document and save evidence. The evidence can be of many different forms. The Standard Drafting Team recognizes that there are concurrent evidence requirements of other NERC Standards that could, at times, fulfill evidence requirements of this Standard.

15.7.1 Frequently Asked Questions:

What forms of evidence are acceptable?

Acceptable forms of evidence, as relevant for the Requirement being documented, include but are not limited to:

- Process documents or plans
- Data (such as relay settings sheets, photos, SCADA, and test records)
- Database lists, records and/or screen shots that demonstrate compliance information
- Prints, diagrams and/or schematics
- Maintenance records
- Logs (operator, substation, and other types of log)
- Inspection forms
- Mail, memos, or email proving the required information was exchanged, coordinated, submitted or received
- Check-off forms (paper or electronic)
- Any record that demonstrates that the maintenance activity was known, accounted for, and/or performed.

If I replace a failed Protection System component with another component, what testing do I need to perform on the new component?
In order to reset the Table 1 maintenance interval for the replacement component, all relevant Table 1 activities for the component should be performed.

I have evidence to show compliance for PRC-016 ("Special Protection System Misoperation"). Can I also use it to show compliance for this Standard, PRC-005-2?
Maintaining evidence for operation of Special Protection Systems could concurrently be utilized as proof of the operation of the associated trip coil (provided one can be certain of the trip coil involved). Thus the reporting requirements that one may have to do for the Misoperation of a

Special Protection Scheme under PRC-016 could work for the activity tracking requirements under this PRC-005-2.

I maintain disturbance records which show Protection System operations. Can I use these records to show compliance?

These records can be concurrently utilized as dc trip path verifications to the degree that they demonstrate the proper function of that dc trip path.

I maintain test reports on some of my components of my Protection System components. Can I use these test reports to show that I have verified a maintenance activity?

Yes.

16. References

1. Protection System Maintenance: A Technical Reference. Prepared by the System Protection and Controls Task Force of the NERC Planning Committee. Dated September 13, 2007.

2. "Predicating The Optimum Routine test Interval For Protection Relays," by J. J. Kumm, M.S. Weber, D. Hou, and E. O. Schweitzer, III, IEEE Transactions on Power Delivery, Vol. 10, No. 2, April 1995.

3. "Transmission Relay System Performance Comparison For 2000, 2001, 2002, 2003, 2004 and 2005," Working Group I17 of Power System Relaying Committee of IEEE Power Engineering Society, May 2006.

4. "A Survey of Relaying Test Practices," Special Report by WG I11 of Power System Relaying Committee of IEEE Power Engineering Society, September 16, 1999.

5. "Transmission Protective Relay System Performance Measuring Methodology," Working Group I3 of Power System Relaying Committee of IEEE Power Engineering Society, January 2002.

6. "Processes, Issues, Trends and Quality Control of Relay Settings," Working Group C3 of Power System Relaying Committee of IEEE Power Engineering Society, December 2006.

7. "Proposed Statistical Performance Measures for Microprocessor-Based Transmission-Line Protective Relays, Part I - Explanation of the Statistics, and Part II - Collection and Uses of Data," Working Group D5 of Power System Relaying Committee of IEEE Power Engineering Society, May 1995; Papers 96WM 016-6 PWRD and 96WM 127-1 PWRD, 1996 IEEE Power Engineering Society Winter Meeting.

8. "Analysis And Guidelines For Testing Numerical Protection Schemes," Final Report of CIGRE WG 34.10, August 2000.

9. "Use of Preventative Maintenance and System Performance Data to Optimize Scheduled Maintenance Intervals," H. Anderson, R. Loughlin, and J. Zipp, Georgia Tech Protective Relay Conference, May 1996.

PSMT SDT References

10. "Essentials of Statistics for Business and Economics" Anderson, Sweeney, Williams, 2003

11. "Introduction to Statistics and Data Analysis" - Second Edition, Peck, Olson, Devore, 2005

12. "Statistical Analysis for Business Decisions" Peters, Summers, 1968

Figures

Figure 1: Typical Transmission System

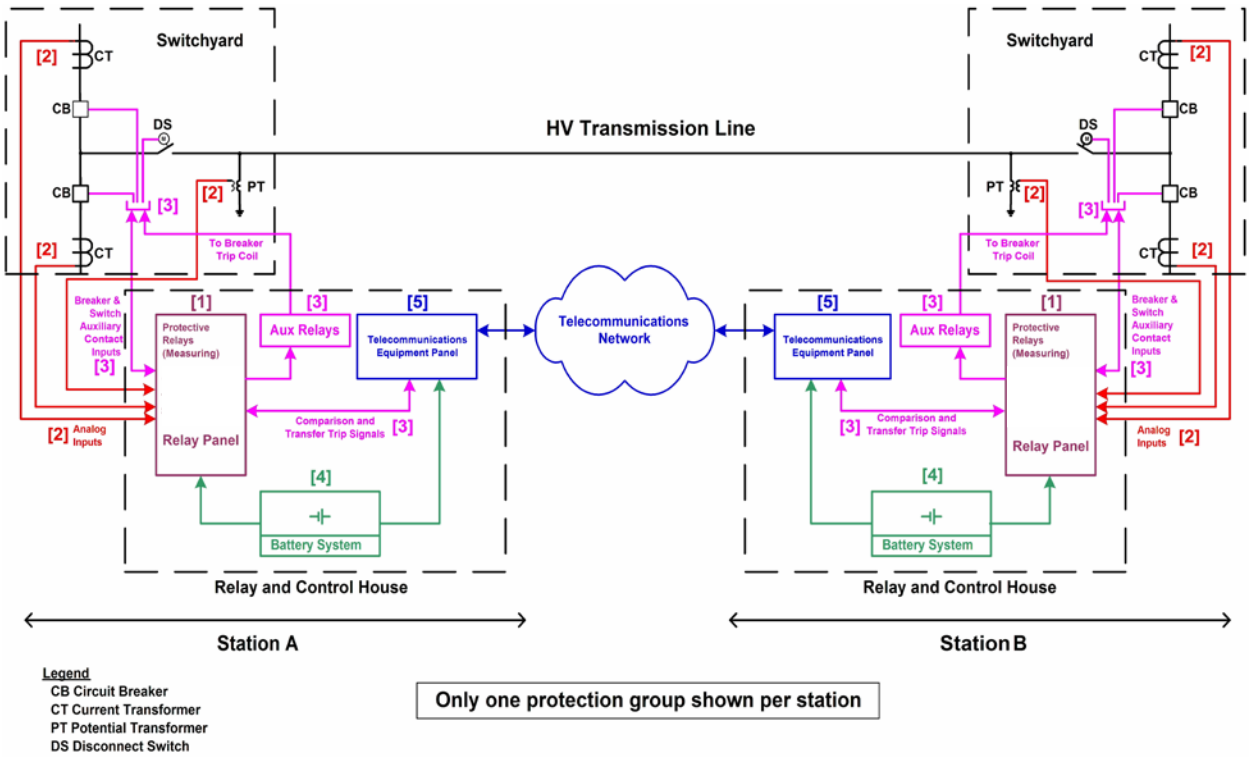

For information on components, see ***Figure 1 & 2 Legend – Components of Protection Systems***

(Return)

Figure 2: Typical Generation System

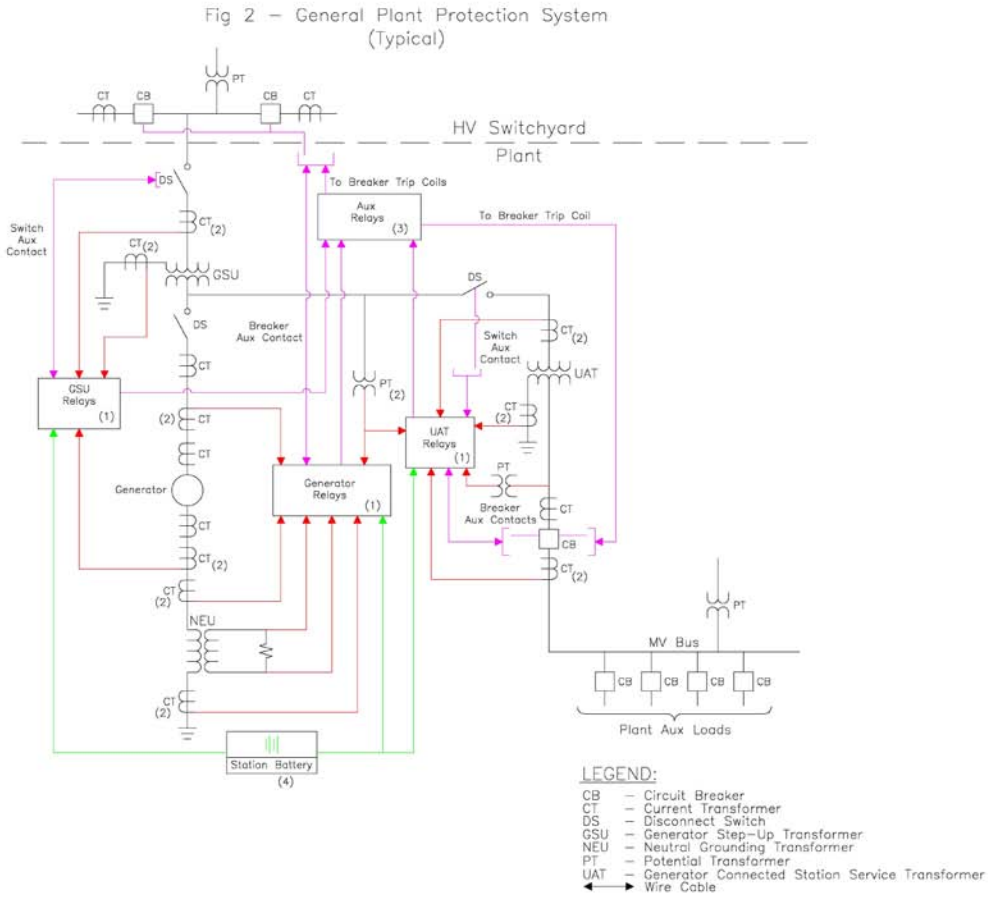

For information on components, see ***Figure 1 & 2 Legend – Components of Protection Systems***

(Return)

Figure 1 & 2 Legend – Components of Protection Systems

Number in Figure	Component of Protection System	Includes	Excludes
1	Protective relays which respond to electrical quantities	All protective relays that use current and/or voltage inputs from current & voltage sensors and that trip the 86, 94 or trip coil.	Devices that use non-electrical methods of operation including thermal, pressure, gas accumulation, and vibration. Any ancillary equipment not specified in the definition of Protection systems. Control and/or monitoring equipment that is not a part of the automatic tripping action of the Protection System
2	Voltage and current sensing devices providing inputs to protective relays	The signals from the voltage & current sensing devices to the protective relay input.	Voltage & current sensing devices that are not a part of the Protection System, including sync-check systems, metering systems and data acquisition systems.
3	Control circuitry associated with protective functions	All control wiring (or other medium for conveying trip signals) associated with the tripping action of 86 devices, 94 devices or trip coils (from all parallel trip paths). This would include fiber-optic systems that carry a trip signal as well as hard-wired systems that carry trip current.	Closing circuits, SCADA circuits, other devices in control scheme not passing trip current
4	Station dc supply	Batteries and battery chargers and any control power system which has the function of supplying power to the protective relays, associated trip circuits and trip coils.	Any power supplies that are not used to power protective relays or their associated trip circuits and trip coils.
5	Communications systems necessary for correct operation of protective functions	Tele-protection equipment used to convey specific information, in the form of analog or digital signals, necessary for the correct operation of protective functions.	Any communications equipment that is not used to convey information necessary for the correct operation of protective functions.

(Return)

Appendix A

The following illustrates the concept of overlapping verifications and tests as summarized in Section 10 of the paper. As an example, Figure A-1 shows protection for a critical transmission line by carrier blocking directional comparison pilot relaying. The goal is to verify the ability of the entire two-terminal pilot protection scheme to protect for line faults, and to avoid over-tripping for faults external to the transmission line zone of protection bounded by the current transformer locations.

Figure A-1

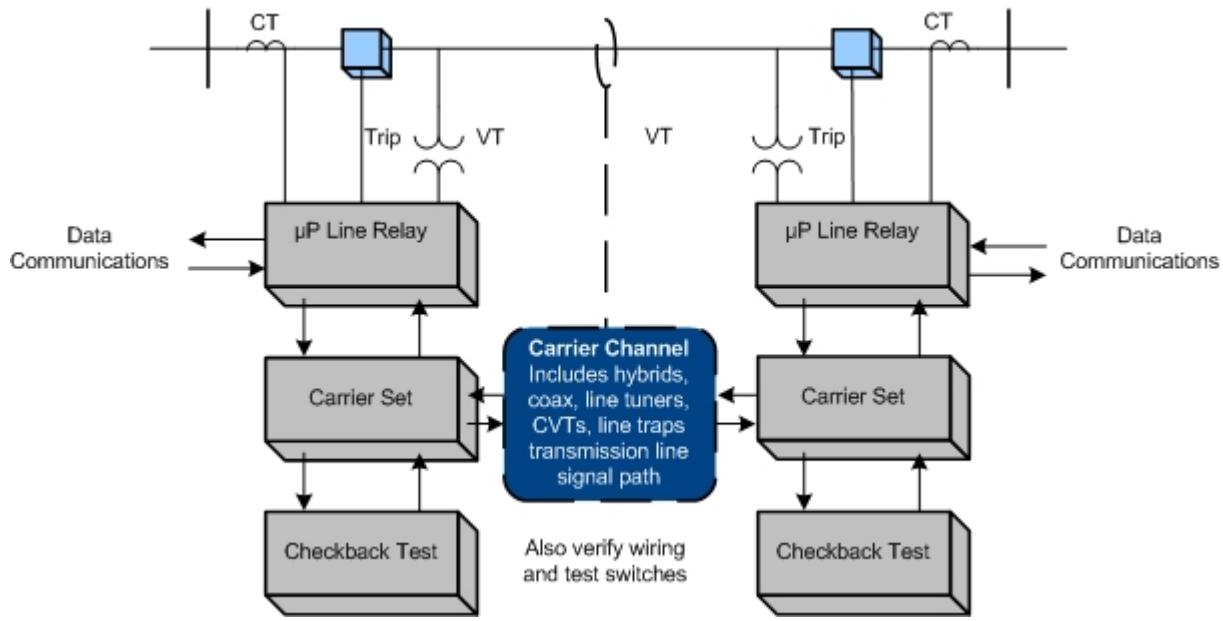

In this example (Figure A1), verification takes advantage of the self-monitoring features of microprocessor multifunction line relays at each end of the line. For each of the line relays themselves, the example assumes that the user has the following arrangements in place:

1. The relay has a data communications port that can be accessed from remote locations.
2. The relay has internal self-monitoring programs and functions that report failures of internal electronics, via communications messages or alarm contacts to SCADA.
3. The relays report loss of dc power, and the relays themselves or external monitors report the state of the dc battery supply.
4. The CT and PT inputs to the relays are used for continuous calculation of metered values of volts, amperes, plus Watts and VARs on the line. These metered values are reported by data communications. For maintenance, the user elects to compare these readings to those of other relays, meters, or DFRs. The other readings may be from redundant relaying or measurement systems or they may be derived from values in other protection zones. Comparison with other such readings to within required relaying accuracy verifies Voltage & Current Sensing Devices, wiring, and analog signal input processing of the relays. One effective way to do this is to utilize the

relay metered values directly in SCADA, where they can be compared with other references or state estimator values.

5. Breaker status indication from auxiliary contacts is verified in the same way as in (2). Status indications must be consistent with the flow or absence of current.
6. Continuity of the breaker trip circuit from dc bus through the trip coil is monitored by the relay and reported via communications.
7. Correct operation of the on-off carrier channel is also critical to security of the protection system, so each carrier set has a connected or integrated automatic checkback test unit. The automatic checkback test runs several times a day. Newer carrier sets with integrated checkback testing check for received signal level and report abnormal channel attenuation or noise, even if the problem is not severe enough to completely disable the channel.

These monitoring activities plus the check-back test comprise automatic verification of all the protection system elements that experience tells us are the most prone to fail. But, does this comprise a complete verification?

Figure A-2

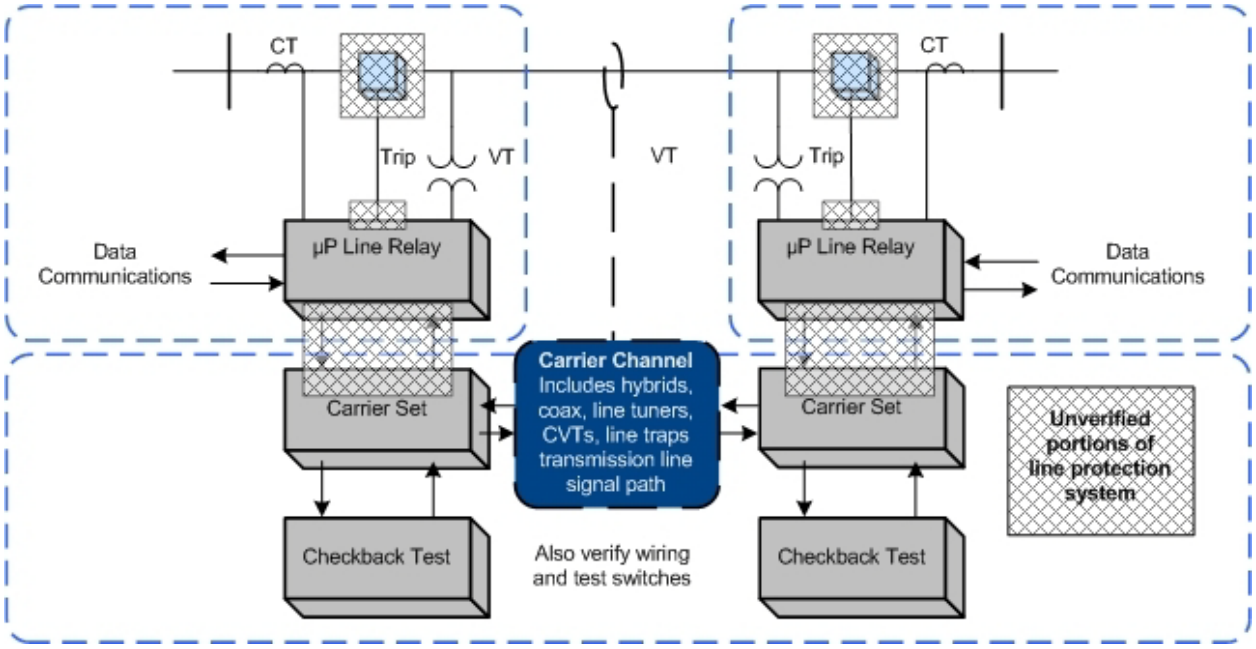

The dotted boxes of Figure A-2 show the sections of verification defined by the monitoring and verification practices just listed. These sections are not completely overlapping, and the shaded regions show elements that are not verified:

1. The continuity of trip coils is verified, but no means is provided for validating the ability of the circuit breaker to trip if the trip coil should be energized.
2. Within each line relay, all the microprocessors that participate in the trip decision have been verified by internal monitoring. However, the trip circuit is actually energized by the contacts of a small telephone-type "ice cube" relay within the line protective relay. The microprocessor energizes the coil of this ice cube relay through its output data port and a transistor driver circuit. There is no monitoring of the output port, driver circuit, ice cube relay, or contacts of that relay. These components are critical for tripping the circuit breaker for a fault.
3. The check-back test of the carrier channel does not verify the connections between the relaying microprocessor internal decision programs and the carrier transmitter keying circuit or the carrier receiver output state. These connections include microprocessor I/O ports, electronic driver circuits, wiring, and sometimes telephone-type auxiliary relays.
4. The correct states of breaker and disconnect switch auxiliary contacts are monitored, but this does not confirm that the state change indication is correct when the breaker or switch opens.

A practical solution for (1) and (2) is to observe actual breaker tripping, with a specified maximum time interval between trip tests. Clearing of naturally-occurring faults are demonstrations of operation that reset the time interval clock for testing of each breaker tripped in this way. If faults do not occur, manual tripping of the breaker through the relay trip output via data communications to the relay microprocessor meets the requirement for periodic testing.

PRC-005 does not address breaker maintenance, and its protection system test requirements can be met by energizing the trip circuit in a test mode (breaker disconnected) through the relay microprocessor. This can be done via a front-panel button command to the relay logic, or application of a simulated fault with a relay test set. However, utilities have found that breakers often show problems during protection system tests. It is recommended that protection system verification include periodic testing of the actual tripping of connected circuit breakers.

Testing of the relay-carrier set interface in (3) requires that each relay key its transmitter, and that the other relay demonstrate reception of that blocking carrier. This can be observed from relay or DFR records during naturally occurring faults, or by a manual test. If the checkback test sequence were incorporated in the relay logic, the carrier sets and carrier channel are then included in the overlapping segments monitored by the two relays, and the monitoring gap is completely eliminated.

Appendix B — Protection System Maintenance Standard Drafting Team

Charles W. Rogers
Chairman
Consumers Energy Co.

John B. Anderson
Xcel Energy

Merle E. Ashton
Tri-State G&T

Corporation
Bob Bentert
Florida Power & Light Company

John Ciufo
Hydro One Inc

Sam Francis
Oncor

Carol A. Gerou
Midwest Reliability Organization

William D. Shultz
Southern Company Generation

Russell C. Hardison
Tennessee Valley Authority

David Harper
NRG Texas Maintenance Services

Mark Lucas
ComEd

Al McMeekin
NERC Staff
North American Electric Reliability

Mark Peterson
Great River Energy

Leonard Swanson, Jr
National Grid USA

Eric A. Udren
Quanta Technology

Philip B. Winston
Southern Company Transmission

John A. Zipp
ITC Holdings

NERC
NORTH AMERICAN ELECTRIC RELIABILITY CORPORATION

Standards Announcement

Successive Ballot and Non-Binding Poll Now Open
May 3 – 12, 2011

Now available at: https://standards.nerc.net/CurrentBallots.aspx

Project 2007-17: Protection System Maintenance and Testing

A successive ballot for the proposed standard, PRC-005-2 — Protection System Maintenance, and a concurrent, non-binding poll of the revised VRFs and VSLs are being conducted through **8:00 pm Eastern on Thursday, May 12, 2011**.

Instructions

All members of the ballot pool must cast a new ballot since the votes and comments from the last ballot will not be carried over. In addition, members of the ballot pool will need to cast a new opinion on the revised VRFs and VSLs. The drafting team will consider all comments (those submitted with a comment form, and those submitted with a ballot or with the non-binding poll) and will determine whether to make additional changes to the standard and its implementation plan.

Special Instructions for Submitting Comments With a Ballot

Comments submitted with ballots are extremely valuable to help the drafting team revise its work. In an effort to reduce the burden on stakeholders providing comments, the drafting team requests that all comments (both those submitted with a ballot and those submitted by stakeholders not balloting) be submitted through the electronic comment form posted at:
https://www.nerc.net/nercsurvey/Survey.asp?s=88fc1b48299643f2b8acd43c76dcc30f.

This will ensure that stakeholders only provide a single set of comments, but have an opportunity to notify the drafting team if they have provided comments.

During the successive ballot window, members of the ballot pool associated with this project may log in and submit their votes from the following page: https://standards.nerc.net/CurrentBallots.aspx . **When submitting a ballot with comments, simply record a "Comments submitted" in the comments field of the ballot to indicate that comments were submitted.**

Documents for this project, including an off-line unofficial copy of the questions listed in the comment forms are posted at the following site:
http://www.nerc.com/filez/standards/Protection_System_Maintenance_Project_2007-17.html

Note that PRC-005-2 reflects the merging of the following standards into a single standard, making it impractical to post a "redline" of proposed PRC-005-2 that shows the changes to the last balloted version of the standard.

- PRC-005-1 — Transmission and Generation Protection System Maintenance and Testing
- PRC-008-0 — Underfrequency Load Shedding Equipment Maintenance Program
- PRC-011-0 — UVLS System Maintenance and Testing
- PRC-017-0 — Special Protection System Maintenance and Testing

The last approved versions of PRC-005-1, PRC-008-0, PRC-011-0, and PRC-017-0 have been posted on the project's web page for easy reference at:

http://www.nerc.com/filez/standards/Protection_System_Maintenance_Project_2007-17.html

Next Steps

The drafting team will consider all comments and will determine whether to make additional changes to the standard and its implementation plan.

Project Background

The proposed PRC-005-2 – Protection System Maintenance standard addresses FERC directives from FERC Order 693, as well as issues identified by stakeholders. In accordance with the FERC directives, this draft standard establishes requirements for a time-based maintenance program, where all relevant devices are maintained according to prescribed maximum intervals. It further establishes requirements for a condition-based maintenance program, where the hands-on maintenance intervals are adjusted to reflect the known and reported condition of the relevant devices. For a performance-based maintenance program, it ascertains where the hands-on maintenance intervals are adjusted to reflect the historical performance of the relevant devices.

Standards Development Process

The Standard Processes Manual contains all the procedures governing the standards development process. The success of the NERC standards development process depends on stakeholder participation. We extend our thanks to all those who participate. For more information or assistance, please contact Monica Benson at monica.benson@nerc.net.

For more information or assistance, please contact Monica Benson, Standards Process Administrator, at monica.benson@nerc.net or at 404-446-2560.

North American Electric Reliability Corporation
116-390 Village Blvd.
Princeton, NJ 08540
609.452.8060 | www.nerc.com

NERC
NORTH AMERICAN ELECTRIC RELIABILITY CORPORATION

Standards Announcement

Project 2007-17 Protection System Maintenance and Testing
Successive Formal Comment Period Open
April 13 – May 12, 2011
Successive Ballot: May 3 – May 12, 2011

Now available at: http://www.nerc.com/filez/standards/Protection_System_Maintenance_Project_2007-17.html

The Protection System Maintenance and Testing drafting team has posted its consideration of comments (those submitted with a ballot, those submitted with a non-binding poll, and those submitted with a comment form), and revised PRC-005-2 and its associated implementation plan and VRFs and VSLs in response to feedback received in comments as well as a quality review. Clean and redline versions of PRC-005-2 — Protection System Maintenance, clean and redline versions of the associated implementation plan and VRFs and VSLs, and a revised technical reference document that combines the former supplemental reference and FAQ documents are posted for a 30-day formal comment period through **8:00 pm Eastern on Thursday, May 12th**.

Instructions

Please use this electronic form to submit comments. If you experience any difficulties in using the electronic form, please contact Monica Benson at monica.benson@nerc.net.

Documents for this project, including an off-line unofficial copy of the questions listed in the comment forms are posted at the following site:
http://www.nerc.com/filez/standards/Protection_System_Maintenance_Project_2007-17.html

Note that PRC-005-2 reflects the merging of the following standards into a single standard, making it impractical to post a "redline" of proposed PRC-005-2 that shows the changes to the last balloted version of the standard.

- PRC-005-1 — Transmission and Generation Protection System Maintenance and Testing
- PRC-008-0 — Underfrequency Load Shedding Equipment Maintenance Program
- PRC-011-0 — UVLS System Maintenance and Testing
- PRC-017-0 — Special Protection System Maintenance and Testing

The last approved versions of PRC-005-1, PRC-008-0, PRC-011-0, and PRC-017-0 have been posted on the project's web page for easy reference at:
http://www.nerc.com/filez/standards/Protection_System_Maintenance_Project_2007-17.html

Next Steps – Successive Ballot and New, Non-binding Poll of VRFs and VSLs

A successive ballot of the revised standard and its associated implementation plan, and a new non-binding poll of the revised VRFs and VSLs will be conducted during the last 10 days of the comment period, beginning on Tuesday, May 3, 2011 through Friday, May 13, 2011.

Project Background

The proposed PRC-005-2 – Protection System Maintenance standard addresses FERC directives from FERC Order 693, as well as issues identified by stakeholders. In accordance with the FERC directives, this draft standard establishes requirements for a time-based maintenance program, where all relevant devices are maintained according to prescribed maximum intervals. It further establishes requirements for a condition-based maintenance program, where the hands-on maintenance intervals are adjusted to reflect the known and reported condition of the relevant devices. For a performance-based maintenance program, it ascertains where the hands-on maintenance intervals are adjusted to reflect the historical performance of the relevant devices.

Applicability of Standards in Project

Transmission Owners
Generator Owners
Distribution Providers

Standards Development Process

The Standard Processes Manual contains all the procedures governing the standards development process. The success of the NERC standards development process depends on stakeholder participation. We extend our thanks to all those who participate.

For more information or assistance, please contact Monica Benson, Standards Process Administrator, at monica.benson@nerc.net or at 404-446-2560.

North American Electric Reliability Corporation
116-390 Village Blvd.
Princeton, NJ 08540
609.452.8060 | www.nerc.com

NERC
NORTH AMERICAN ELECTRIC RELIABILITY CORPORATION

Standards Announcement

Project 2007-17 Protection System Maintenance and Testing Successive Ballot and Non-binding Poll Results

Now available at: https://standards.nerc.net/Ballots.aspx

A successive ballot on revisions to PRC-005-2 Protection System Maintenance concluded on May 13, 2011, and a concurrent non-binding poll of associated VRF and VSLs concluded on May 16, 2011. The non-binding poll was held open past the closing of the ballot to allow a quorum to be achieved.

Ballot Results for Revisions to PRC-005-2

Voting statistics are listed below, and the Ballot Results Web page provides a link to the detailed results:

Quorum: 78.33 %
Approval: 67.00 %

Non-binding Poll Results for Associated VRF and VSLs

Of those who registered to participate, 75% provided an opinion or an abstention; 66% of those who provided an opinion indicated support for the VRFs and VSLs that were proposed.

Next Steps

The drafting team will consider all comments received during the formal comment period, ballot, and non-binding poll, and will determine whether to make additional changes to the standard and its implementation plan and associated VRFs and VSLs. If the team makes substantive changes to address issues raised in comments, an additional 30-day formal comment period will be conducted with a successive ballot during the last 10 days of the comment period. If the team makes only minor clarifying changes to address issues identified in comments, a recirculation ballot may be conducted.

Background:

The proposed PRC-005-2 – Protection System Maintenance standard addresses FERC directives from FERC Order 693, as well as issues identified by stakeholders. In accordance with the FERC directives, this draft standard establishes requirements for a time-based maintenance program, where all relevant devices are maintained according to prescribed maximum intervals. It further establishes requirements for a condition-based maintenance program, where the hands-on maintenance intervals are adjusted to reflect the known and reported condition of the relevant devices. For a performance-based maintenance program, it ascertains where the hands-on maintenance intervals are adjusted to reflect the historical performance of the relevant devices.

Standards Process

The Standard Processes Manual contains all the procedures governing the standards development process. The success of the NERC standards development process depends on stakeholder participation. We extend our thanks to all those who participate.

For more information or assistance, please contact Monica Benson, Standards Process Administrator, at monica.benson@nerc.net or at 404-446-2560.

North American Electric Reliability Corporation
116-390 Village Blvd.
Princeton, NJ 08540
609.452.8060 | www.nerc.com

User Name

Password

Log in

Register

-Ballot Pools
-Current Ballots
-Ballot Results
-Registered Ballot Body
-Proxy Voters

Home Page

Ballot Results

Ballot Name:	Project 2007-17 PRC-005-2 SB_in
Ballot Period:	5/3/2011 - 5/13/2011
Ballot Type:	Initial
Total # Votes:	253
Total Ballot Pool:	323
Quorum:	**78.33 % The Quorum has been reached**
Weighted Segment Vote:	67.00 %
Ballot Results:	**The standard will proceed to recirculation ballot.**

Summary of Ballot Results

Segment	Ballot Pool	Segment Weight	Affirmative # Votes	Affirmative Fraction	Negative # Votes	Negative Fraction	Abstain # Votes	No Vote
1 - Segment 1.	89	1	46	0.687	21	0.313	4	18
2 - Segment 2.	9	0.6	4	0.4	2	0.2	1	2
3 - Segment 3.	71	1	38	0.704	16	0.296	1	16
4 - Segment 4.	24	1	11	0.5	11	0.5	1	1
5 - Segment 5.	68	1	23	0.548	19	0.452	4	22
6 - Segment 6.	38	1	17	0.586	12	0.414	1	8
7 - Segment 7.	0	0	0	0	0	0	0	0
8 - Segment 8.	11	0.8	5	0.5	3	0.3	1	2
9 - Segment 9.	6	0.5	5	0.5	0	0	1	0
10 - Segment 10.	7	0.6	6	0.6	0	0	0	1
Totals	**323**	**7.5**	**155**	**5.025**	**84**	**2.475**	**14**	**70**

Individual Ballot Pool Results

Segment	Organization	Member	Ballot	Comments
1	Allegheny Power	Rodney Phillips		
1	Ameren Services	Kirit S. Shah	Affirmative	View
1	American Electric Power	Paul B. Johnson	Affirmative	View
1	American Transmission Company, LLC	Jason Shaver	Negative	View
1	Arizona Public Service Co.	Robert D Smith	Negative	View
1	Associated Electric Cooperative, Inc.	John Bussman	Negative	View
1	Avista Corp.	Scott Kinney		
1	Baltimore Gas & Electric Company	John J. Moraski	Affirmative	

1	BC Transmission Corporation	Gordon Rawlings	Affirmative	
1	Beaches Energy Services	Joseph S. Stonecipher	Negative	View
1	Black Hills Corp	Eric Egge		
1	Bonneville Power Administration	Donald S. Watkins	Negative	View
1	CenterPoint Energy	Paul Rocha	Negative	
1	Central Maine Power Company	Brian Conroy		
1	City of Vero Beach	Randall McCamish	Negative	
1	City Utilities of Springfield, Missouri	Jeff Knottek	Affirmative	
1	Clark Public Utilities	Jack Stamper	Affirmative	
1	Cleco Power LLC	Danny McDaniel		
1	Colorado Springs Utilities	Paul Morland	Negative	View
1	Commonwealth Edison Co.	Daniel Brotzman		
1	Consolidated Edison Co. of New York	Christopher L de Graffenried	Affirmative	View
1	Dairyland Power Coop.	Robert W. Roddy	Abstain	
1	Dayton Power & Light Co.	Hertzel Shamash	Affirmative	
1	Deseret Power	James Tucker	Affirmative	
1	Dominion Virginia Power	John K Loftis	Affirmative	
1	Duke Energy Carolina	Douglas E. Hils	Affirmative	
1	East Kentucky Power Coop.	George S. Carruba	Affirmative	
1	Empire District Electric Co.	Ralph Frederick Meyer	Affirmative	
1	Entergy Corporation	George R. Bartlett		
1	FirstEnergy Energy Delivery	Robert Martinko	Affirmative	View
1	Florida Keys Electric Cooperative Assoc.	Dennis Minton	Negative	View
1	Gainesville Regional Utilities	Luther E. Fair	Negative	View
1	GDS Associates, Inc.	Claudiu Cadar	Negative	View
1	Georgia Transmission Corporation	Harold Taylor, II	Affirmative	
1	Great River Energy	Gordon Pietsch	Affirmative	View
1	Hydro One Networks, Inc.	Ajay Garg	Affirmative	
1	Idaho Power Company	Ronald D. Schellberg	Affirmative	View
1	International Transmission Company Holdings Corp	Michael Moltane	Negative	View
1	Kansas City Power & Light Co.	Michael Gammon		
1	Keys Energy Services	Stan T. Rzad	Negative	View
1	Lake Worth Utilities	Walt Gill	Negative	
1	Lakeland Electric	Larry E Watt	Negative	View
1	Lincoln Electric System	Doug Bantam	Affirmative	
1	Long Island Power Authority	Robert Ganley	Affirmative	
1	Lower Colorado River Authority	Martyn Turner	Affirmative	
1	Manitoba Hydro	Joe D Petaski	Negative	View
1	Metropolitan Water District of Southern California	Ernest Hahn	Abstain	
1	MidAmerican Energy Co.	Terry Harbour	Affirmative	
1	Minnesota Power, Inc.	Randi Woodward	Affirmative	
1	National Grid	Saurabh Saksena	Affirmative	View
1	Nebraska Public Power District	Richard L. Koch		
1	New York Power Authority	Arnold J. Schuff	Affirmative	View
1	Northeast Utilities	David H. Boguslawski	Affirmative	
1	NorthWestern Energy	John Canavan	Affirmative	View
1	Ohio Valley Electric Corp.	Robert Mattey	Affirmative	
1	Oklahoma Gas and Electric Co.	Marvin E VanBebber	Abstain	
1	Omaha Public Power District	Douglas G Peterchuck	Affirmative	
1	Orlando Utilities Commission	Brad Chase	Affirmative	
1	Otter Tail Power Company	Lawrence R. Larson		
1	Pacific Gas and Electric Company	Chifong Thomas		
1	PacifiCorp	Mark Sampson		
1	PECO Energy	Ronald Schloendorn	Affirmative	
1	Platte River Power Authority	John C. Collins	Affirmative	View
1	Potomac Electric Power Co.	David Thorne	Affirmative	View
1	PowerSouth Energy Cooperative	Larry D. Avery		
1	PPL Electric Utilities Corp.	Brenda L Truhe	Affirmative	
1	Public Service Company of New Mexico	Laurie Williams		
1	Public Service Electric and Gas Co.	Kenneth D. Brown	Affirmative	
1	Public Utility District No. 1 of Chelan County	Chad Bowman	Affirmative	
1	Puget Sound Energy, Inc.	Catherine Koch		
1	Sacramento Municipal Utility District	Tim Kelley		
1	Salt River Project	Robert Kondziolka	Affirmative	
1	Santee Cooper	Terry L. Blackwell	Negative	View

1	SCE&G	Henry Delk, Jr.	Abstain	
1	Seattle City Light	Pawel Krupa	Negative	View
1	South Texas Electric Cooperative	Richard McLeon	Negative	
1	Southern California Edison Co.	Dana Cabbell	Affirmative	
1	Southern Company Services, Inc.	Horace Stephen Williamson	Affirmative	
1	Southern Illinois Power Coop.	William G. Hutchison	Affirmative	
1	Southwest Transmission Cooperative, Inc.	James L. Jones	Affirmative	
1	Southwestern Power Administration	Gary W Cox		
1	Sunflower Electric Power Corporation	Noman Lee Williams		
1	Tennessee Valley Authority	Larry Akens	Negative	View
1	Tri-State G & T Association, Inc.	Keith V Carman	Affirmative	View
1	Tucson Electric Power Co.	John Tolo	Negative	View
1	United Illuminating Co.	Jonathan Appelbaum	Affirmative	
1	Westar Energy	Allen Klassen	Affirmative	
1	Western Area Power Administration	Brandy A Dunn	Affirmative	
1	Xcel Energy, Inc.	Gregory L Pieper	Affirmative	
2	Alberta Electric System Operator	Mark B Thompson	Affirmative	
2	BC Transmission Corporation	Faramarz Amjadi	Affirmative	
2	Electric Reliability Council of Texas, Inc.	Chuck B Manning		
2	Independent Electricity System Operator	Kim Warren	Affirmative	
2	ISO New England, Inc.	Kathleen Goodman	Affirmative	
2	Midwest ISO, Inc.	Jason L. Marshall	Negative	View
2	New York Independent System Operator	Gregory Campoli		
2	PJM Interconnection, L.L.C.	Tom Bowe	Negative	View
2	Southwest Power Pool	Charles H Yeung	Abstain	
3	Alabama Power Company	Richard J. Mandes	Affirmative	
3	Allegheny Power	Bob Reeping		
3	Ameren Services	Mark Peters	Affirmative	
3	American Electric Power	Raj Rana		
3	Arizona Public Service Co.	Thomas R. Glock		
3	Atlantic City Electric Company	James V. Petrella	Affirmative	
3	BC Hydro and Power Authority	Pat G. Harrington	Affirmative	
3	Bonneville Power Administration	Rebecca Berdahl	Negative	
3	Central Lincoln PUD	Steve Alexanderson	Affirmative	View
3	City of Bartow, Florida	Matt Culverhouse	Negative	View
3	City of Clewiston	Lynne Mila	Negative	
3	City of Farmington	Linda R. Jacobson	Affirmative	View
3	City of Green Cove Springs	Gregg R Griffin	Negative	View
3	City of Leesburg	Phil Janik		
3	ComEd	Bruce Krawczyk	Affirmative	
3	Consolidated Edison Co. of New York	Peter T Yost	Affirmative	View
3	Consumers Energy	David A. Lapinski	Negative	View
3	Cowlitz County PUD	Russell A Noble	Affirmative	
3	Delmarva Power & Light Co.	Michael R. Mayer	Affirmative	
3	Detroit Edison Company	Kent Kujala	Negative	
3	Dominion Resources Services	Michael F Gildea	Affirmative	
3	Duke Energy Carolina	Henry Ernst-Jr	Affirmative	
3	East Kentucky Power Coop.	Sally Witt	Affirmative	
3	Entergy	Joel T Plessinger	Negative	View
3	FirstEnergy Solutions	Kevin Querry	Affirmative	View
3	Florida Power Corporation	Lee Schuster	Affirmative	
3	Gainesville Regional Utilities	Kenneth Simmons	Negative	
3	Georgia Power Company	Anthony L Wilson	Affirmative	
3	Georgia System Operations Corporation	R Scott S. Barfield-McGinnis		
3	Great River Energy	Sam Kokkinen	Affirmative	
3	Gulf Power Company	Gwen S Frazier	Affirmative	
3	Hydro One Networks, Inc.	Michael D. Penstone	Affirmative	
3	JEA	Garry Baker	Negative	View
3	Kansas City Power & Light Co.	Charles Locke	Affirmative	
3	Kissimmee Utility Authority	Gregory David Woessner	Negative	
3	Lakeland Electric	Mace Hunter	Negative	View
3	Lincoln Electric System	Bruce Merrill	Affirmative	
3	Los Angeles Department of Water & Power	Kenneth Silver		
3	Louisville Gas and Electric Co.	Charles A. Freibert		
3	Manitoba Hydro	Greg C. Parent	Negative	View
3	MEAG Power	Steven Grego		
3	MidAmerican Energy Co.	Thomas C. Mielnik	Affirmative	

3	Mississippi Power	Don Horsley	Affirmative	
3	Municipal Electric Authority of Georgia	Steven M. Jackson	Affirmative	
3	Muscatine Power & Water	John S Bos	Affirmative	View
3	New York Power Authority	Marilyn Brown	Affirmative	
3	Niagara Mohawk (National Grid Company)	Michael Schiavone	Affirmative	
3	Northern Indiana Public Service Co.	William SeDoris	Negative	View
3	Ocala Electric Utility	David T. Anderson		
3	Orlando Utilities Commission	Ballard Keith Mutters	Affirmative	
3	PacifiCorp	John Apperson	Affirmative	
3	PECO Energy an Exelon Co.	Vincent J. Catania		
3	Platte River Power Authority	Terry L Baker	Affirmative	View
3	Potomac Electric Power Co.	Robert Reuter	Affirmative	
3	Progress Energy Carolinas	Sam Waters		
3	Public Service Electric and Gas Co.	Jeffrey Mueller	Affirmative	
3	Public Utility District No. 1 of Chelan County	Kenneth R. Johnson	Affirmative	
3	Public Utility District No. 2 of Grant County	Greg Lange	Negative	View
3	Sacramento Municipal Utility District	James Leigh-Kendall		
3	Salem Electric	Anthony Schacher	Affirmative	
3	Salt River Project	John T. Underhill	Affirmative	
3	San Diego Gas & Electric	Scott Peterson		
3	Santee Cooper	Zack Dusenbury		
3	Seattle City Light	Dana Wheelock	Negative	View
3	Southern California Edison Co.	David Schiada	Affirmative	
3	Springfield Utility Board	Jeff Nelson	Abstain	
3	Tampa Electric Co.	Ronald L Donahey		
3	Tri-State G & T Association, Inc.	Janelle Marriott	Affirmative	View
3	Wisconsin Electric Power Marketing	James R. Keller	Negative	View
3	Wisconsin Public Service Corp.	Gregory J Le Grave		
3	Xcel Energy, Inc.	Michael Ibold	Affirmative	
4	Alliant Energy Corp. Services, Inc.	Kenneth Goldsmith	Negative	View
4	American Municipal Power	Kevin Koloini	Negative	
4	American Public Power Association	Allen Mosher	Affirmative	
4	City of Clewiston	Kevin McCarthy	Negative	
4	City of New Smyrna Beach Utilities Commission	Timothy Beyrle	Negative	
4	Consumers Energy	David Frank Ronk	Negative	View
4	Cowlitz County PUD	Rick Syring	Affirmative	
4	Detroit Edison Company	Daniel Herring	Negative	
4	Florida Municipal Power Agency	Frank Gaffney	Negative	View
4	Fort Pierce Utilities Authority	Thomas W. Richards	Affirmative	
4	Georgia System Operations Corporation	Guy Andrews	Affirmative	View
4	Illinois Municipal Electric Agency	Bob C. Thomas	Negative	View
4	Integrys Energy Group, Inc.	Christopher Plante	Affirmative	
4	Madison Gas and Electric Co.	Joseph G. DePoorter	Affirmative	View
4	Ohio Edison Company	Douglas Hohlbaugh	Affirmative	View
4	Old Dominion Electric Coop.	Mark Ringhausen	Affirmative	View
4	Public Utility District No. 1 of Douglas County	Henry E. LuBean	Affirmative	View
4	Public Utility District No. 1 of Snohomish County	John D. Martinsen	Affirmative	
4	Sacramento Municipal Utility District	Mike Ramirez		
4	Seattle City Light	Hao Li	Negative	View
4	Seminole Electric Cooperative, Inc.	Steven R Wallace	Abstain	
4	South Mississippi Electric Power Association	Steve McElhaney	Negative	
4	Wisconsin Energy Corp.	Anthony Jankowski	Negative	View
4	Y-W Electric Association, Inc.	James A Ziebarth	Affirmative	View
5	AEP Service Corp.	Brock Ondayko	Affirmative	View
5	Amerenue	Sam Dwyer	Affirmative	
5	APS	Mel Jensen	Negative	
5	Avista Corp.	Edward F. Groce	Abstain	
5	Black Hills Corp	George Tatar	Affirmative	
5	Bonneville Power Administration	Francis J. Halpin	Negative	View
5	Chelan County Public Utility District #1	John Yale	Affirmative	
5	City of Grand Island	Jeff Mead	Abstain	
5	City of Tallahassee	Alan Gale		
5	City Water, Light & Power of Springfield	Karl E. Kohlrus		
5	Consolidated Edison Co. of New York	Wilket (Jack) Ng	Affirmative	View
5	Constellation Power Source Generation, Inc.	Amir Y Hammad	Negative	View

5	Consumers Energy	James B Lewis	Negative	View
5	Cowlitz County PUD	Bob Essex	Affirmative	
5	Dominion Resources, Inc.	Mike Garton	Affirmative	
5	Duke Energy	Robert Smith		
5	Dynegy Inc.	Dan Roethemeyer	Affirmative	
5	East Kentucky Power Coop.	Stephen Ricker	Affirmative	
5	Energy Northwest - Columbia Generating Station	Doug Ramey		
5	Entegra Power Group, LLC	Kenneth Parker	Affirmative	View
5	Entergy Corporation	Stanley M Jaskot		
5	FirstEnergy Solutions	Kenneth Dresner	Affirmative	View
5	Florida Municipal Power Agency	David Schumann	Negative	View
5	Green Country Energy	Greg Froehling	Affirmative	
5	Horizon Wind Energy	Brent Hebert		
5	Indeck Energy Services, Inc.	Rex A Roehl	Negative	View
5	JEA	Donald Gilbert		
5	Kansas City Power & Light Co.	Scott Heidtbrink		
5	Kissimmee Utility Authority	Mike Blough	Negative	
5	Lakeland Electric	Thomas J Trickey		
5	Liberty Electric Power LLC	Daniel Duff	Negative	View
5	Lincoln Electric System	Dennis Florom		
5	Louisville Gas and Electric Co.	Charlie Martin		
5	Luminant Generation Company LLC	Mike Laney	Affirmative	View
5	Manitoba Hydro	Mark Aikens	Negative	View
5	Massachusetts Municipal Wholesale Electric Company	David Gordon	Abstain	
5	New Harquahala Generating Co. LLC	Nicholas Q Hayes		
5	New York Power Authority	Gerald Mannarino	Affirmative	View
5	Northern Indiana Public Service Co.	Michael K Wilkerson		
5	Otter Tail Power Company	Stacie Hebert		
5	PacifiCorp	Sandra L. Shaffer	Affirmative	View
5	Portland General Electric Co.	Gary L Tingley		
5	PowerSouth Energy Cooperative	Tim Hattaway	Negative	
5	PPL Generation LLC	Mark A Heimbach		
5	Progress Energy Carolinas	Wayne Lewis	Affirmative	
5	PSEG Power LLC	Jerzy A Slusarz	Affirmative	View
5	Public Utility District No. 1 of Lewis County	Steven Grega	Negative	View
5	Reedy Creek Energy Services	Bernie Budnik	Negative	
5	RRI Energy	Thomas J. Bradish		
5	Sacramento Municipal Utility District	Bethany Hunter		
5	Salt River Project	Glen Reeves	Affirmative	
5	San Diego Gas & Electric	Daniel Baerman		
5	Santee Cooper	Lewis P Pierce	Negative	View
5	Seattle City Light	Michael J. Haynes	Negative	View
5	Seminole Electric Cooperative, Inc.	Brenda K. Atkins		
5	South Carolina Electric & Gas Co.	Richard Jones		
5	South Mississippi Electric Power Association	Jerry W Johnson		
5	Southern Company Generation	William D Shultz	Affirmative	View
5	Tampa Electric Co.	RJames Rocha	Negative	
5	Tenaska, Inc.	Scott M. Helyer	Negative	View
5	Tennessee Valley Authority	George T. Ballew	Negative	View
5	TransAlta Centralia Generation, LLC	Joanna Luong-Tran	Abstain	
5	Tri-State G & T Association, Inc.	Barry Ingold	Affirmative	View
5	U.S. Army Corps of Engineers	Melissa Kurtz	Negative	View
5	U.S. Bureau of Reclamation	Martin Bauer P.E.	Affirmative	View
5	Wisconsin Electric Power Co.	Linda Horn	Negative	View
5	Wisconsin Public Service Corp.	Leonard Rentmeester	Affirmative	
5	Xcel Energy, Inc.	Liam Noailles	Affirmative	
6	AEP Marketing	Edward P. Cox	Affirmative	View
6	Ameren Energy Marketing Co.	Jennifer Richardson	Affirmative	
6	Bonneville Power Administration	Brenda S. Anderson	Negative	
6	Cleco Power LLC	Matthew D Cripps		
6	Consolidated Edison Co. of New York	Nickesha P Carrol	Affirmative	View
6	Constellation Energy Commodities Group	Brenda Powell	Negative	View
6	Dominion Resources, Inc.	Louis S. Slade	Affirmative	
6	Duke Energy Carolina	Walter Yeager	Affirmative	
6	Entergy Services, Inc.	Terri F Benoit	Negative	View

6	Eugene Water & Electric Board	Daniel Mark Bedbury	Affirmative	
6	Exelon Power Team	Pulin Shah	Affirmative	
6	FirstEnergy Solutions	Mark S Travaglianti	Affirmative	View
6	Florida Municipal Power Agency	Richard L. Montgomery	Negative	View
6	Florida Municipal Power Pool	Thomas E Washburn	Negative	View
6	Florida Power & Light Co.	Silvia P. Mitchell	Negative	
6	Great River Energy	Donna Stephenson		
6	Kansas City Power & Light Co.	Jessica L Klinghoffer	Affirmative	
6	Lakeland Electric	Paul Shipps	Negative	View
6	Lincoln Electric System	Eric Ruskamp	Affirmative	
6	Louisville Gas and Electric Co.	Daryn Barker		
6	Luminant Energy	Brad Jones	Affirmative	View
6	Manitoba Hydro	Daniel Prowse	Negative	View
6	New York Power Authority	Thomas Papadopoulos		
6	Northern Indiana Public Service Co.	Joseph O'Brien	Negative	View
6	Omaha Public Power District	David Ried	Affirmative	
6	OTP Wholesale Marketing	Bruce Glorvigen		
6	Platte River Power Authority	Carol Ballantine	Affirmative	View
6	Progress Energy	John T Sturgeon	Affirmative	
6	PSEG Energy Resources & Trade LLC	James D. Hebson	Affirmative	
6	Public Utility District No. 1 of Chelan County	Hugh A. Owen	Affirmative	
6	RRI Energy	Trent Carlson		
6	Santee Cooper	Suzanne Ritter	Negative	View
6	Seattle City Light	Dennis Sismaet	Negative	View
6	Seminole Electric Cooperative, Inc.	Trudy S. Novak	Abstain	
6	South Carolina Electric & Gas Co.	Matt H Bullard		
6	Tennessee Valley Authority	Marjorie S. Parsons	Negative	View
6	Western Area Power Administration - UGP Marketing	John Stonebarger		
6	Xcel Energy, Inc.	David F. Lemmons	Affirmative	
8		James A Maenner	Abstain	
8		Merle Ashton	Affirmative	
8		Roger C Zaklukiewicz	Affirmative	
8		Kristina M. Loudermilk	Affirmative	View
8	Ascendant Energy Services, LLC	Raymond Tran		
8	JDRJC Associates	Jim D. Cyrulewski	Negative	
8	Pacific Northwest Generating Cooperative	Margaret Ryan	Negative	View
8	Power Energy Group LLC	Peggy Abbadini		
8	SPS Consulting Group Inc.	Jim R Stanton	Affirmative	
8	Utility Services, Inc.	Brian Evans-Mongeon	Affirmative	
8	Volkmann Consulting, Inc.	Terry Volkmann	Negative	
9	California Energy Commission	William Mitchell Chamberlain	Affirmative	View
9	Commonwealth of Massachusetts Department of Public Utilities	Donald E. Nelson	Affirmative	
9	National Association of Regulatory Utility Commissioners	Diane J. Barney	Affirmative	
9	Oregon Public Utility Commission	Jerome Murray	Abstain	
9	Public Service Commission of South Carolina	Philip Riley	Affirmative	
9	Utah Public Service Commission	Ric Campbell	Affirmative	View
10	Florida Reliability Coordinating Council	Linda Campbell	Affirmative	
10	Midwest Reliability Organization	Dan R Schoenecker		
10	New York State Reliability Council	Alan Adamson	Affirmative	
10	Northeast Power Coordinating Council, Inc.	Guy V. Zito	Affirmative	View
10	ReliabilityFirst Corporation	Jacquie Smith	Affirmative	View
10	SERC Reliability Corporation	Carter B. Edge	Affirmative	
10	Western Electricity Coordinating Council	Louise McCarren	Affirmative	View

Account Log-In/Register

Copyright © 2010 by the North American Electric Reliability Corporation. : All rights reserved.
A New Jersey Nonprofit Corporation

NERC
NORTH AMERICAN ELECTRIC RELIABILITY CORPORATION

Ballot Results	
Non-Binding Poll Name:	Project 2007-17 PRC-005-2 Non-binding poll VRFs and VSLs_in
Poll Period:	5/3/2011 - 5/15/2011
Total # Opinions:	172
Total Ballot Pool:	351
Summary Results:	75% of those who registered to participate provided an opinion or abstention; 66% of those who provided an opinion indicated support for the VRFs and VSLs that were proposed.

Individual Ballot Pool Results

Segment	Organization	Member	Opinions	Comments
1	Allegheny Power	Rodney Phillips		
1	Ameren Services	Kirit S. Shah	Abstain	
1	American Electric Power	Paul B. Johnson	Negative	View
1	American Transmission Company, LLC	Jason Shaver	Abstain	
1	Arizona Public Service Co.	Robert D Smith	Abstain	
1	Associated Electric Cooperative, Inc.	John Bussman	Abstain	
1	Avista Corp.	Scott Kinney		
1	Baltimore Gas & Electric Company	John J. Moraski	Abstain	
1	BC Transmission Corporation	Gordon Rawlings	Abstain	
1	Beaches Energy Services	Joseph S. Stonecipher	Negative	View
1	Black Hills Corp	Eric Egge		
1	Bonneville Power Administration	Donald S. Watkins	Abstain	
1	CenterPoint Energy	Paul Rocha	Negative	
1	Central Maine Power Company	Brian Conroy		

1	City of Vero Beach	Randall McCamish	Negative	
1	City Utilities of Springfield, Missouri	Jeff Knottek	Affirmative	
1	Clark Public Utilities	Jack Stamper	Affirmative	
1	Cleco Power LLC	Danny McDaniel		
1	Colorado Springs Utilities	Paul Morland	Abstain	
1	Commonwealth Edison Co.	Daniel Brotzman		
1	Consolidated Edison Co. of New York	Christopher L de Graffenried	Affirmative	View
1	Dairyland Power Coop.	Robert W. Roddy	Abstain	
1	Dayton Power & Light Co.	Hertzel Shamash	Affirmative	
1	Deseret Power	James Tucker	Abstain	
1	Dominion Virginia Power	John K Loftis	Abstain	
1	Duke Energy Carolina	Douglas E. Hils	Affirmative	View
1	East Kentucky Power Coop.	George S. Carruba	Affirmative	
1	Empire District Electric Co.	Ralph Frederick Meyer	Affirmative	
1	Entergy Corporation	George R. Bartlett		
1	FirstEnergy Energy Delivery	Robert Martinko	Affirmative	
1	Florida Keys Electric Cooperative Assoc.	Dennis Minton	Negative	
1	Gainesville Regional Utilities	Luther E. Fair	Abstain	
1	GDS Associates, Inc.	Claudiu Cadar	Negative	View
1	Georgia Transmission Corporation	Harold Taylor, II	Affirmative	
1	Great River Energy	Gordon Pietsch	Affirmative	
1	Hydro One Networks, Inc.	Ajay Garg	Affirmative	
1	Idaho Power Company	Ronald D. Schellberg	Affirmative	
1	International Transmission	Michael Moltane	Abstain	

	Company Holdings Corp			
1	Kansas City Power & Light Co.	Michael Gammon	Affirmative	
1	Keys Energy Services	Stan T. Rzad	Negative	
1	Lake Worth Utilities	Walt Gill	Negative	
1	Lakeland Electric	Larry E Watt	Negative	
1	Lee County Electric Cooperative	John W Delucca	Negative	
1	Lincoln Electric System	Doug Bantam	Affirmative	
1	Long Island Power Authority	Robert Ganley	Affirmative	
1	Lower Colorado River Authority	Martyn Turner	Affirmative	
1	Manitoba Hydro	Joe D Petaski	Negative	View
1	Metropolitan Water District of Southern California	Ernest Hahn	Abstain	
1	MidAmerican Energy Co.	Terry Harbour	Abstain	
1	National Grid	Saurabh Saksena		
1	Nebraska Public Power District	Richard L. Koch		
1	New York Power Authority	Arnold J. Schuff	Affirmative	
1	Northeast Utilities	David H. Boguslawski	Affirmative	
1	NorthWestern Energy	John Canavan	Affirmative	
1	Ohio Valley Electric Corp.	Robert Mattey	Affirmative	
1	Oklahoma Gas and Electric Co.	Marvin E VanBebber	Abstain	
1	Omaha Public Power District	Douglas G Peterchuck	Affirmative	
1	Oncor Electric Delivery	Michael T. Quinn		
1	Orlando Utilities Commission	Brad Chase	Affirmative	
1	Otter Tail Power Company	Lawrence R. Larson		
1	Pacific Gas and Electric Company	Chifong Thomas		

1	PacifiCorp	Mark Sampson		
1	PECO Energy	Ronald Schloendorn	Affirmative	
1	Platte River Power Authority	John C. Collins	Affirmative	
1	Portland General Electric Co.	Frank F. Afranji	Affirmative	
1	Potomac Electric Power Co.	David Thorne	Affirmative	View
1	PowerSouth Energy Cooperative	Larry D. Avery	Negative	
1	PPL Electric Utilities Corp.	Brenda L Truhe	Abstain	
1	Public Service Company of New Mexico	Laurie Williams		
1	Public Service Electric and Gas Co.	Kenneth D. Brown	Abstain	
1	Public Utility District No. 1 of Chelan County	Chad Bowman	Abstain	
1	Puget Sound Energy, Inc.	Catherine Koch		
1	Sacramento Municipal Utility District	Tim Kelley		
1	Salt River Project	Robert Kondziolka	Affirmative	
1	Santee Cooper	Terry L. Blackwell	Negative	View
1	SCE&G	Henry Delk, Jr.	Abstain	
1	Seattle City Light	Pawel Krupa	Abstain	
1	South Texas Electric Cooperative	Richard McLeon	Negative	
1	Southern California Edison Co.	Dana Cabbell	Affirmative	
1	Southern Company Services, Inc.	Horace Stephen Williamson	Affirmative	View
1	Southern Illinois Power Coop.	William G. Hutchison	Negative	
1	Southwest Transmission Cooperative, Inc.	James L. Jones	Affirmative	
1	Southwestern Power Administration	Gary W Cox		
1	Sunflower Electric Power Corporation	Noman Lee Williams	Affirmative	

1	Tennessee Valley Authority	Larry Akens	Affirmative	
1	Tri-State G & T Association, Inc.	Keith V Carman		
1	Tucson Electric Power Co.	John Tolo	Affirmative	
1	United Illuminating Co.	Jonathan Appelbaum	Affirmative	
1	Westar Energy	Allen Klassen	Abstain	
1	Western Area Power Administration	Brandy A Dunn	Affirmative	
1	Xcel Energy, Inc.	Gregory L Pieper		
2	Alberta Electric System Operator	Jason L. Murray		
2	BC Transmission Corporation	Faramarz Amjadi		
2	Electric Reliability Council of Texas, Inc.	Chuck B Manning		
2	Independent Electricity System Operator	Kim Warren	Negative	View
2	ISO New England, Inc.	Kathleen Goodman		
2	Midwest ISO, Inc.	Jason L. Marshall		
2	New York Independent System Operator	Gregory Campoli	Abstain	
2	PJM Interconnection, L.L.C.	Tom Bowe	Abstain	
2	Southwest Power Pool	Charles H Yeung	Abstain	
3	Alabama Power Company	Richard J. Mandes	Affirmative	View
3	Allegheny Power	Bob Reeping		
3	Ameren Services	Mark Peters	Abstain	
3	American Electric Power	Raj Rana		
3	Arizona Public Service Co.	Thomas R. Glock		
3	Atlantic City Electric Company	James V. Petrella	Affirmative	
3	BC Hydro and Power Authority	Pat G. Harrington	Abstain	
3	Blachly-Lane Electric Co-op	Bud Tracy	Abstain	

3	Bonneville Power Administration	Rebecca Berdahl	Abstain	
3	Central Electric Cooperative, Inc. (Redmond, Oregon)	Dave Markham	Abstain	
3	Central Lincoln PUD	Steve Alexanderson	Abstain	
3	City of Bartow, Florida	Matt Culverhouse	Negative	
3	City of Clewiston	Lynne Mila	Negative	
3	City of Farmington	Linda R. Jacobson	Negative	View
3	City of Green Cove Springs	Gregg R Griffin	Negative	View
3	City of Leesburg	Phil Janik		
3	Clearwater Power Co.	Dave Hagen	Abstain	
3	Cleco Utility Group	Bryan Y Harper		
3	ComEd	Bruce Krawczyk	Affirmative	
3	Consolidated Edison Co. of New York	Peter T Yost	Affirmative	View
3	Consumers Energy	David A. Lapinski	Affirmative	
3	Consumers Power Inc.	Roman Gillen	Abstain	
3	Coos-Curry Electric Cooperative, Inc	Roger Meader	Abstain	
3	Cowlitz County PUD	Russell A Noble	Affirmative	
3	Delmarva Power & Light Co.	Michael R. Mayer	Affirmative	
3	Detroit Edison Company	Kent Kujala	Negative	
3	Dominion Resources Services	Michael F Gildea	Abstain	
3	Douglas Electric Cooperative	Dave Sabala	Abstain	
3	Duke Energy Carolina	Henry Ernst-Jr	Affirmative	
3	East Kentucky Power Coop.	Sally Witt	Affirmative	
3	Entergy	Joel T Plessinger	Negative	
3	Fall River Rural Electric Cooperative	Bryan Case	Abstain	

3	FirstEnergy Solutions	Kevin Querry	Affirmative	
3	Florida Power Corporation	Lee Schuster	Affirmative	
3	Gainesville Regional Utilities	Kenneth Simmons	Affirmative	
3	Georgia Power Company	Anthony L Wilson	Affirmative	View
3	Georgia System Operations Corporation	R Scott S. Barfield-McGinnis		
3	Great River Energy	Sam Kokkinen	Affirmative	
3	Gulf Power Company	Gwen S Frazier	Affirmative	View
3	Hydro One Networks, Inc.	Michael D. Penstone	Affirmative	
3	JEA	Garry Baker	Affirmative	
3	Kansas City Power & Light Co.	Charles Locke	Affirmative	
3	Kissimmee Utility Authority	Gregory David Woessner	Negative	
3	Lakeland Electric	Mace Hunter	Affirmative	
3	Lane Electric Cooperative, Inc.	Rick Crinklaw	Abstain	
3	Lincoln Electric Cooperative, Inc.	Michael Henry	Abstain	
3	Lincoln Electric System	Bruce Merrill	Affirmative	
3	Los Angeles Department of Water & Power	Kenneth Silver		
3	Lost River Electric Cooperative	Richard Reynolds	Abstain	
3	Louisville Gas and Electric Co.	Charles A. Freibert		
3	Manitoba Hydro	Greg C. Parent	Negative	View
3	MEAG Power	Steven Grego		
3	MidAmerican Energy Co.	Thomas C. Mielnik	Abstain	
3	Mississippi Power	Don Horsley	Affirmative	View
3	Municipal Electric Authority of Georgia	Steven M. Jackson	Affirmative	

3	Muscatine Power & Water	John S Bos	Affirmative	
3	New York Power Authority	Marilyn Brown	Affirmative	
3	Niagara Mohawk (National Grid Company)	Michael Schiavone	Affirmative	
3	North Carolina Municipal Power Agency #1	Denise Roeder	Abstain	
3	Northern Indiana Public Service Co.	William SeDoris	Negative	View
3	Northern Lights Inc.	Jon Shelby	Abstain	
3	Ocala Electric Utility	David T. Anderson		
3	Okanogan County Electric Cooperative, Inc.	Ray Ellis	Abstain	
3	Orlando Utilities Commission	Ballard Keith Mutters	Abstain	
3	OTP Wholesale Marketing	Bradley Tollerson		
3	PacifiCorp	John Apperson	Abstain	
3	PECO Energy an Exelon Co.	Vincent J. Catania		
3	Platte River Power Authority	Terry L Baker	Affirmative	
3	Potomac Electric Power Co.	Robert Reuter	Affirmative	
3	Progress Energy Carolinas	Sam Waters		
3	Public Service Electric and Gas Co.	Jeffrey Mueller	Abstain	
3	Public Utility District No. 1 of Chelan County	Kenneth R. Johnson	Affirmative	
3	Public Utility District No. 2 of Grant County	Greg Lange	Negative	View
3	Raft River Rural Electric Cooperative	Heber Carpenter	Abstain	
3	Sacramento Municipal Utility District	James Leigh-Kendall		
3	Salem Electric	Anthony Schacher	Affirmative	
3	Salmon River Electric Cooperative	Ken Dizes	Abstain	
3	Salt River Project	John T. Underhill	Affirmative	

3	San Diego Gas & Electric	Scott Peterson		
3	Santee Cooper	Zack Dusenbury		
3	Seattle City Light	Dana Wheelock	Abstain	
3	South Mississippi Electric Power Association	Gary Hutson		
3	Southern California Edison Co.	David Schiada	Affirmative	
3	Springfield Utility Board	Jeff Nelson	Abstain	
3	Tampa Electric Co.	Ronald L Donahey		
3	Tri-State G & T Association, Inc.	Janelle Marriott	Affirmative	View
3	Umatilla Electric Cooperative	Steve Eldrige	Abstain	
3	West Oregon Electric Cooperative, Inc.	Marc Farmer	Abstain	
3	Wisconsin Electric Power Marketing	James R. Keller	Abstain	
3	Wisconsin Public Service Corp.	Gregory J Le Grave		
3	Xcel Energy, Inc.	Michael Ibold	Abstain	
4	Alliant Energy Corp. Services, Inc.	Kenneth Goldsmith	Negative	View
4	American Municipal Power	Kevin Koloini	Negative	
4	American Public Power Association	Allen Mosher	Affirmative	
4	City of Clewiston	Kevin McCarthy	Negative	
4	City of New Smyrna Beach Utilities Commission	Timothy Beyrle	Negative	
4	Consumers Energy	David Frank Ronk	Affirmative	
4	Cowlitz County PUD	Rick Syring	Affirmative	
4	Detroit Edison Company	Daniel Herring	Negative	
4	Florida Municipal Power Agency	Frank Gaffney	Negative	View
4	Fort Pierce Utilities Authority	Thomas W. Richards		
4	Georgia System Operations	Guy Andrews	Affirmative	

	Corporation			
4	Illinois Municipal Electric Agency	Bob C. Thomas	Abstain	
4	Integrys Energy Group, Inc.	Christopher Plante	Abstain	
4	Madison Gas and Electric Co.	Joseph G. DePoorter	Abstain	
4	Ohio Edison Company	Douglas Hohlbaugh	Affirmative	
4	Old Dominion Electric Coop.	Mark Ringhausen	Abstain	
4	Public Utility District No. 1 of Douglas County	Henry E. LuBean	Affirmative	
4	Public Utility District No. 1 of Snohomish County	John D. Martinsen	Affirmative	
4	Sacramento Municipal Utility District	Mike Ramirez		
4	Seattle City Light	Hao Li	Abstain	
4	Seminole Electric Cooperative, Inc.	Steven R Wallace	Abstain	
4	South Mississippi Electric Power Association	Steve McElhaney	Negative	
4	Wisconsin Energy Corp.	Anthony Jankowski	Abstain	
4	Y-W Electric Association, Inc.	James A Ziebarth	Abstain	
5	AEP Service Corp.	Brock Ondayko	Negative	View
5	Amerenue	Sam Dwyer	Abstain	
5	APS	Mel Jensen	Abstain	
5	Avista Corp.	Edward F. Groce	Abstain	
5	BC Hydro and Power Authority	Clement Ma	Abstain	
5	Black Hills Corp	George Tatar	Affirmative	
5	Bonneville Power Administration	Francis J. Halpin	Abstain	
5	Chelan County Public Utility District #1	John Yale	Abstain	
5	City of Grand Island	Jeff Mead	Abstain	

5	City of Tallahassee	Alan Gale	Negative	
5	City Water, Light & Power of Springfield	Karl E. Kohlrus		
5	Consolidated Edison Co. of New York	Wilket (Jack) Ng	Affirmative	View
5	Constellation Power Source Generation, Inc.	Amir Y Hammad	Negative	
5	Consumers Energy	James B Lewis	Negative	View
5	Cowlitz County PUD	Bob Essex	Affirmative	
5	Dominion Resources, Inc.	Mike Garton	Abstain	
5	Duke Energy	Robert Smith		
5	Dynegy Inc.	Dan Roethemeyer	Affirmative	
5	East Kentucky Power Coop.	Stephen Ricker	Affirmative	
5	Energy Northwest - Columbia Generating Station	Doug Ramey		
5	Entegra Power Group, LLC	Kenneth Parker	Abstain	
5	Entergy Corporation	Stanley M Jaskot		
5	Exelon Nuclear	Michael Korchynsky	Affirmative	
5	ExxonMobil Research and Engineering	Martin Kaufman	Negative	
5	FirstEnergy Solutions	Kenneth Dresner	Affirmative	
5	Florida Municipal Power Agency	David Schumann	Negative	View
5	Great River Energy	Cynthia E Sulzer		
5	Green Country Energy	Greg Froehling	Affirmative	
5	Horizon Wind Energy	Brent Hebert		
5	Indeck Energy Services, Inc.	Rex A Roehl	Negative	View
5	JEA	Donald Gilbert		
5	Kansas City Power & Light Co.	Scott Heidtbrink	Affirmative	

5	Kissimmee Utility Authority	Mike Blough	Negative	
5	Lakeland Electric	Thomas J Trickey		
5	Liberty Electric Power LLC	Daniel Duff	Negative	View
5	Lincoln Electric System	Dennis Florom		
5	Louisville Gas and Electric Co.	Charlie Martin		
5	Luminant Generation Company LLC	Mike Laney	Affirmative	View
5	Manitoba Hydro	Mark Aikens	Negative	View
5	Massachusetts Municipal Wholesale Electric Company	David Gordon	Abstain	
5	New Harquahala Generating Co. LLC	Nicholas Q Hayes		
5	New York Power Authority	Gerald Mannarino	Affirmative	
5	Northern Indiana Public Service Co.	Michael K Wilkerson		
5	Otter Tail Power Company	Stacie Hebert		
5	Pacific Gas and Electric Company	Richard J. Padilla	Affirmative	
5	PacifiCorp	Sandra L. Shaffer	Abstain	
5	Portland General Electric Co.	Gary L Tingley		
5	PowerSouth Energy Cooperative	Tim Hattaway	Abstain	
5	PPL Generation LLC	Mark A Heimbach		
5	Progress Energy Carolinas	Wayne Lewis		
5	PSEG Power LLC	Jerzy A Slusarz	Abstain	
5	Public Utility District No. 1 of Lewis County	Steven Grega	Negative	
5	Reedy Creek Energy Services	Bernie Budnik	Negative	
5	RRI Energy	Thomas J. Bradish		
5	Sacramento Municipal Utility District	Bethany Hunter		
5	Salt River Project	Glen Reeves	Affirmative	

5	San Diego Gas & Electric	Daniel Baerman		
5	Santee Cooper	Lewis P Pierce	Negative	View
5	Seattle City Light	Michael J. Haynes	Negative	View
5	Seminole Electric Cooperative, Inc.	Brenda K. Atkins		
5	South Carolina Electric & Gas Co.	Richard Jones		
5	South Mississippi Electric Power Association	Jerry W Johnson		
5	Southern Company Generation	William D Shultz	Affirmative	
5	SRW Cogeneration Limited Partnership	Michael Albosta		
5	Tampa Electric Co.	RJames Rocha	Negative	
5	Tenaska, Inc.	Scott M. Helyer	Abstain	
5	Tennessee Valley Authority	George T. Ballew	Affirmative	
5	TransAlta Centralia Generation, LLC	Joanna Luong-Tran	Abstain	
5	Tri-State G & T Association, Inc.	Barry Ingold	Affirmative	View
5	U.S. Army Corps of Engineers	Melissa Kurtz	Affirmative	
5	U.S. Bureau of Reclamation	Martin Bauer P.E.	Affirmative	
5	Wisconsin Electric Power Co.	Linda Horn	Abstain	
5	Wisconsin Public Service Corp.	Leonard Rentmeester	Affirmative	
5	Xcel Energy, Inc.	Liam Noailles		
6	AEP Marketing	Edward P. Cox	Negative	View
6	Ameren Energy Marketing Co.	Jennifer Richardson	Abstain	
6	Bonneville Power Administration	Brenda S. Anderson	Abstain	
6	Cleco Power LLC	Matthew D Cripps		
6	Consolidated Edison Co. of New York	Nickesha P Carrol	Affirmative	View
6	Constellation Energy Commodities	Brenda Powell	Abstain	

	Group			
6	Dominion Resources, Inc.	Louis S. Slade	Abstain	
6	Duke Energy Carolina	Walter Yeager	Affirmative	
6	Entergy Services, Inc.	Terri F Benoit		
6	Eugene Water & Electric Board	Daniel Mark Bedbury	Affirmative	
6	Exelon Power Team	Pulin Shah	Affirmative	
6	FirstEnergy Solutions	Mark S Travaglianti	Affirmative	
6	Florida Municipal Power Pool	Thomas E Washburn	Negative	View
6	Florida Power & Light Co.	Silvia P. Mitchell	Abstain	
6	Great River Energy	Donna Stephenson		
6	Kansas City Power & Light Co.	Thomas Saitta		
6	Lakeland Electric	Paul Shipps	Negative	
6	Lincoln Electric System	Eric Ruskamp	Affirmative	
6	Louisville Gas and Electric Co.	Daryn Barker		
6	Luminant Energy	Brad Jones	Affirmative	View
6	Manitoba Hydro	Daniel Prowse	Negative	View
6	New York Power Authority	Thomas Papadopoulos		
6	Northern Indiana Public Service Co.	Joseph O'Brien	Negative	View
6	Omaha Public Power District	David Ried	Affirmative	
6	OTP Wholesale Marketing	Bruce Glorvigen		
6	Platte River Power Authority	Carol Ballantine	Affirmative	
6	Progress Energy	John T Sturgeon	Affirmative	
6	PSEG Energy Resources & Trade LLC	James D. Hebson	Abstain	
6	Public Utility District No. 1 of Chelan County	Hugh A. Owen	Abstain	

6	RRI Energy	Trent Carlson		
6	Santee Cooper	Suzanne Ritter	Negative	View
6	Seattle City Light	Dennis Sismaet	Negative	View
6	Seminole Electric Cooperative, Inc.	Trudy S. Novak	Abstain	
6	South Carolina Electric & Gas Co.	Matt H Bullard		
6	Tennessee Valley Authority	Marjorie S. Parsons	Affirmative	
6	Western Area Power Administration - UGP Marketing	John Stonebarger		
6	Xcel Energy, Inc.	David F. Lemmons		
8		Roger C Zaklukiewicz	Affirmative	
8		James A Maenner	Abstain	
8		Merle Ashton	Affirmative	
8		Kristina M. Loudermilk	Affirmative	View
8	Ascendant Energy Services, LLC	Raymond Tran		
8	JDRJC Associates	Jim D. Cyrulewski	Abstain	
8	Pacific Northwest Generating Cooperative	Margaret Ryan	Abstain	
8	Power Energy Group LLC	Peggy Abbadini		
8	SPS Consulting Group Inc.	Jim R Stanton	Affirmative	
8	Utility Services, Inc.	Brian Evans-Mongeon	Abstain	
8	Volkmann Consulting, Inc.	Terry Volkmann	Negative	
9	California Energy Commission	William Mitchell Chamberlain	Affirmative	
9	Commonwealth of Massachusetts Department of Public Utilities	Donald E. Nelson	Affirmative	
9	National Association of Regulatory Utility Commissioners	Diane J. Barney	Affirmative	

9	North Carolina Utilities Commission	Kimberly J. Jones		
9	Oregon Public Utility Commission	Jerome Murray	Abstain	
9	Public Service Commission of South Carolina	Philip Riley	Affirmative	
9	Utah Public Service Commission	Ric Campbell	Affirmative	
10	Florida Reliability Coordinating Council	Linda Campbell	Negative	View
10	Midwest Reliability Organization	Dan R Schoenecker		
10	New York State Reliability Council	Alan Adamson	Affirmative	
10	Northeast Power Coordinating Council, Inc.	Guy V. Zito	Affirmative	
10	ReliabilityFirst Corporation	Jacquie Smith	Negative	View
10	SERC Reliability Corporation	Carter B. Edge	Abstain	
10	Western Electricity Coordinating Council	Louise McCarren		

Individual or group. (55 Responses)
Name (33 Responses)
Organization (33 Responses)
Group Name (22 Responses)
Lead Contact (22 Responses)
Question 1 (47 Responses)
Question 1 Comments (55 Responses)
Question 2 (45 Responses)
Question 2 Comments (55 Responses)
Question 3 (38 Responses)
Question 3 Comments (55 Responses)
Question 4 (40 Responses)
Question 4 Comments (55 Responses)
Question 5 (0 Responses)
Question 5 Comments (55 Responses)

Individual
Robert W. Kenyon
NERC - EA & I
Recommend entities be explictly required to document the Relay Maintenance Program in one document. Many entities presently maintain their Protection Maintenace Program in several documents, such as one for relays, one for batteries, etc. This complicates compliance review and contributes to non-compliance since personnel in diffeernt departments writing these have different levels of understanding of NERC standards. Separate documents also allow inconsistencies to slip in. Recommend Requirement 1 to changed to the following to address this problem. "Each Transmission Owner, Generator Owner, and Distribution Provider shall establish a Protection System Maintenance Program (PSMP), RECORDED AND UPDATED AS A SINGLE DOCUMNET for its Protection Systems designed to provide protection for BES Element(s). "
Individual
Daniel Duff
Liberty Electric Power LLC
Yes
Yes
No
See comments at end.
Apologies to the drafting team for submitting this with the ballot, repeated here to insure the comments are captured and addressed. While the SDT has done a very good job at responding to the most objectionable parts of the previous version, there are still a number of issues which makes the standard problematic. 1. The standard introduces the term "initiate resolution". This is an interpretable term, and has the potential for an auditor and an entity to disagree on an action. Would issuing a work order be considered "initiating resolution"? What if the WO had a completion date many years into the future? I would suggest adding the term to the list of definitions which will remain with the standard, and defining it as "preforming any task associated with conducting maintenance activities, including but not limited to issuing purchase orders, soliciting bids, scheduling tasks, issuing work requests, and performing studies". 2. Some clarity is needed to differentiate system connected and generator connected station service transformers. A statement that a station

service transformer connected radially to the generator bus is considered a system connected transformer if the transformer cannot be used for service unless connected to the BES. 3. The "bookends" issue, brought up in the prior round of comments, still exists. Although the SDT rightly notes a CAN has been issued regarding bookends, the CAN covers the documentation for system components that entities were required to self-certify to on June 18, 2007. PRC-005-2 adds additional components to the protection system scheme which were not part of that certification, and has the potential to put entities into violation space due to a lack of records for those components. The SDT should add to M3 a statement that entities may demonstrate compliance with the standard by demonstrating that required activities took place twice within the maximum maintenance interval - starting from the effective date of the standard - for all components not listed in PRC-005-1.
Group
Northeast Power Coordinating Council
Guy Zito
Yes
Yes
Yes
Yes
Suggest that to FAQ be added: 1. Regarding Table 2 in the standard, does a fail-safe “form b” contact that is alarmed to a 24/7 operation center qualify as an alarm path with monitoring? 2. Add a clarification as part of the FAQ document that defines whether the control circuitry and trip coil of a non-BES breaker, tripped via a BES protection component, must be tested as per Table 1.5.
Group
MISO Standards Collaborators
Marie Knox
Yes
Yes, however, in the “Supplemental reference and FAQ” document on page 65 there are two areas of concern. Page 65, paragraph 4: “… the type of test equipment used to establish the baseline must be used for any future trending of the cells internal ohmic measurements because of variances in test equipment and the type of ohmic measurement used by different manufacturer’s equipment.” While we understand the importance of creating a baseline, it is not feasible to expect the test equipment be the same as the manufacturer’s test equipment or even the same test equipment over the life of the battery. The expected life of a battery may be in excess of 20 years and it is not feasible to expect that the type of equipment will not change during this period. On Page 65, paragraph 6, it states: “… all manufacturers of internal ohmic measurement devices have established libraries of baseline values …” We question the availability of baseline libraries for all manufacturers considering the variety and longevity of installations.
Yes
Yes
Yes
The additional documentation seems to be quite large, and the additional content seems to go far beyond what is necessary for the PRC-005-2 standard. We recommend the SDT lessen the amount of content provided in the “Supplementary Reference” document.
R3 speaks of a Maintenance Correctable Issue and implementing your Protection System Maintenance Program (PSMP). In the definition of Maintenance Correctable Issue, it states "...of the initial on-site activity". The intent seems to be that during any maintenance activity, and something is found not working properly, you should repair it. Some may look at the word "initial" as during the commissioning of a facility. We recommend the SDT delete the word "initial" to cause less confusion.

We recommend the SDT change the text of “Standard PRC-005-2 – Protection System Maintenance” Table 1-5 on page 19, Row 1, Column 3 to “Verify that each a trip coil is able to operate the circuit breaker, interrupting device, or mitigating device.” Or alternately, “Electrically operate each interrupting device every 6 years”. Trip coils are designed to be energized no longer than the breaker opening time (3-5 cycles). They are robust devices that will successfully operate the breaker for 5,000-10,000 electrical operations. The most likely source of trip coil failure is the breaker operating mechanism binding, thereby preventing the breaker auxiliary stack from opening and keeping the trip coil energized for too long of a time period. Therefore, trip coil failure is a function of the breaker mechanism failure. Exercising the breakers and circuit switchers is an excellent practice. We would encourage language that would suggest this task be done every 2 years, not to exceed 3 years. Exercising the interrupting devices would help eliminate mechanism binding, reducing the chance that the trip coils are energized too long. The language as currently written in Table 1-5, Row 1, will also have the unintentional effect of changing an entities existing interrupting device maintenance interval (essentially driving interrupting device testing to a less than 6 year cycle). We recommend the SDT change the text of “Standard PRC-005-2 – Protection System Maintenance” Table 1-5 on page 19, Row 3, Column 2 to “12 calendar years”. The maximum maintenance interval for “Electromechanical lockout and/or tripping devices which are directly in a trip path from the protective relay to the interrupting device trip coil” should be consistent with the “Unmonitored control circuit” interval which is 12 calendar years. In order to test the lockout relays, it may be necessary to take a bus outage (due to lack of redundancy and associated stability issues with delayed clearing). Increasing the frequency of bus outages (with associated lines or transformers) will also increase the amount of time that the BES is in a less intact system configuration. Increasing the time the BES is in a less intact system configuration also increases the probability of a low frequency, high impact event occurring. Therefore, the Maximum Maintenance Interval should be 12 years for lockout relays. We recognize the substantial efforts and improvements to PRC-005-2 that have been made and appreciate the dedicated work of the SDT. We appreciate the removal of Requirement R1.5 and R4 and other clarifications from draft 3. Our remaining concern for PRC-005-2 is with definition and timelines established in Table 1-5. We believe that, as written, the testing of “each” trip coil and the proposed maintenance interval for lockout testing will result in the increased amount of time that the BES is in a less intact system configuration. We hope that the SDT will consider these changes.
Group
Electric Market Policy
Mike Garton
Yes
Yes
No
IEEE battery maintenance standards call for quarterly inspections. These are targets, though, not maximums. An entity wishing to avoid non-compliance for an interval that might extend past three calendar months must implement a policy of two months with one month of grace period thereby increasing the number of inspections each year by half again. This is unnecessarily frequent. We suggest changing the maximum interval for battery inspections to 4 calendar months. For consistency, Dominion suggests that all battery maintenance intervals expressed as 3 calendar months be changed to 4 calendar months.
Group
Luminant
David Youngblood
Yes
No comments.
Yes
No comments.

Yes
No comments.
Yes
The document was valuable in understanding PRC-005-2 by providing clarification using practical protective relay system examples. Below are two comments for further improvement. 1. It would be beneficial if the document could provide additional information for relaying in the high-voltage switchyard (transmission owned) - power plant (generation owned) interface. While Figures 1 and 2 are typical generation and transmission relay diagrams, it would be helpful if protective relays typically used in the interface also be included. For example, a transmission bus differential would remove a generator from service by tripping the generator lockout. 2. Figures 1 and 2 refer to a “Figure 1 and 2 Legend” table which provides additional information on qualifications for relay components. Should a footnote be used to point toward Reference 1 (Protective System Maintenance: A Technical Reference) located in Section 16?
The red-lined version did not appear to agree with the clean copy. In reading the "red lined" document it appears that R3 was intended to be "Each Transmission Owner, Generation Owner, and distribution Provider shall implement and follow its PSPM and initiate resolution of any identified maintenance correctable issues."
Individual
Russ Schneider
FHEC
Yes
No
Can't locate the implementation plan in the posted materials.
No
For Distribution Provider level equiment there should be no High or Severe VSLs
Yes
It is unclear what compliance obiligations may be created or clarified with the FAQ. It is a good explanatory document and a helpful reference, but the Standard should speak for itself as it relates to what it takes to achieve compliance.
Individual
Michelle D'Antuono
Ingleside Cogeneration LP
Yes
Ingleside Cogeneration, LP, continues to believe that the six year requirement to verify channel performance on associated communications equipment will prove to be more detrimental than beneficial on older relays. Clearly newer technology relays which provide read-outs of signal level or data-error rates will easily verified, but the tools which measure power levels and error rates on non-monitored communication links are far more intrusive. After the technician uncouples and re-attaches a fiber optic connection, the communications channel may be left in worse shape after verification than it was prior to the start of the test. However, we have found that the remainder of the items in the Tables are logically organized and correspond effectively with the five components of a Protection System. The maintenance activities and intervals are technically solid and reasonable. In our opinion, the benefits to proceed outweigh our one concern with the validation of communications channel performance.
Yes
Yes
No

The removal of R1.5 and R7 which required Protection System owners to identify and verify calibration tolerances or equivalent parameters upon conclusion of a maintenance activity was fundamental to Ingleside Cogeneration's "yes" vote. The amount of ambiguity introduced by the requirements and associated documentation did not serve to improve BES reliability in our view.
Group
Santee Cooper
Terry L. Blackwell
Yes
Yes
Yes
No
Comments: Santee Cooper does not agree with the expansion of the UFLS and UVLS requirements to include the dc supply. We understand that, in the previous consideration of comments, it is stated that "For UFLS and UVLS, the maintenance activities related to station dc supply and control circuitry are somewhat constrained relative to similar activities for Protection Systems in general." In the table, the requirement for dc supply for UFLS is to verify the station dc supply voltage when the control circuits are verified, which could be 6 or 12 years. It seems like the restraint shown in the requirement, if an indication of the level of need for the verification, is of a much longer timeframe than what would actually happen in the typical operation of a distribution system. Therefore, proof of this verification seems to be of minimal value compared to the extra documentation required due to this now being an auditable maintenance activity. We also agree that maintenance activities with fast intervals, especially the 3 month ones, should be adjusted to 4 months to allow for the actual interval the entities use to be 3 months. Having the requirement at 3 months forces the utilities to schedule even faster (such as every month or 2 months) to ensure compliance.
Individual
Beth Young
Tampa Electric Company
No
If during a UF operation there were ever any breakers that did not trip properly, there may be enough that do trip to return things to balance. There is more room for error with UFLS than with BES. The standard does make some allowance for differences between UFLS equipment and BES equipment. For example the DC source testing requirement for UFLS is to just test the battery voltage when the control circuit is tested. It is not necessary that the breaker be tripped for UFLS testing every six years as is the case for BES. However, every 12 years all unmonitored control circuitry must be tested, which may include tripping the breaker.
No
The new maintenance plan has to be completed in 1 year. Would that mean it is required to identify and list every element that requires testing in a database within the first year. This will be a time intensive effort that probably that would be difficult to complete in a year with current personnel. After 1 year, would entities be required to start implementing the plan depending on the maintenance intervals of the equipment. Qualified people would have to be in place to start the work, again this would be difficult to accomplish with current personnel.
No
VSL is severe for more than 4% Countable Events on R2. It does not seem feasible.
No
Tampa Electric requests further differentiation between BES protection elements and UFLS equipment.
As written PRC-005-2 would have a very significant impact on Tampa Electric Company with very little reliability benefit. For the testing of the DC control circuits Tampa Electric would need to remove from

service each BES element (circuit, bus, transformer, breaker) and perform an R&C checkout somewhat equivalent to what Tampa Electric does for new construction. That process would have to be repeated no less often than every six years. The testing of DC control circuits to the level described / required in the proposed standard in an energized station is a very risky proposition. Even though an element can be taken out of service for testing, the DC control circuits are often interconnected for functions such as breaker failure, bus and transformer lockouts etc. It is very easy to accidentally trip other in service equipment while doing this testing. Another concern is getting outages on equipment to perform the proposed testing. Tampa Electric believes that there is an unnecessary expansion of the scope of equipment covered by the proposed PRC-005-2 standard into the distribution system related to UVLS and UFLS. Currently, PRC-005-1 includes batteries, instrument transformers, DC control circuitry and communications in addition to the relays for BES protection systems. PRC-008 (UFLS) and PRC-011 (UVLS) are ambiguous as to whether non-relay components are included in those standards. The proposed PRC-005-2 includes the non-relay components into UFLS and UVLS. The problem is, for UFLS and UVLS, the non-relay components are mostly distribution class equipment; hence, the result of this version 2 standard will be inclusion of most distribution class protection system components into PRC-005-2. This is a huge expansion of the scope of equipment covered by the proposed standard with negligible benefit to BES reliability. In addition, testing of protection systems on distribution circuits is difficult for distribution circuits that are radial in nature. In addition, non-relay protection components operate much more frequently on distribution circuits than on transmission Facilities due to more frequent failures due to trees, animals, lightning, traffic accidents, etc., and have much less of a need for testing since they are operationally tested. As another comment, station service transformers are not BES Elements and should not be part of the Applicability - they are radial serving only load. Tampa Electric's Energy Supply Department has the following comment / question regarding Data Retention: • For Requirement R3 R2 and Requirement R4R3, the Transmission Owner, Generator Owner, and Distribution Provider shall each keep documentation of the two most recent performances of each distinct maintenance activity for the Protection System components, or all performances of each distinct maintenance activity for the Protection System component since or to the previous scheduled audit date, whichever is longer. If all of the data which the proposed PRC-005-2 standard requires to be collected is not be available or kept for the prescribed period of time, how does a registered entity comply with the required data retention?

Group

Bonneville Power Administration

Denise Koehn

Yes

No

Many of the maintenance intervals in the standard are given in the terms calendar years or calendar months. There is no description of these terms in the NERC Glossary. My Webster's dictionary defines calendar year as the period that begins on January 1 and ends on December 31. There is no definition in my dictionary of calendar month. Is the intent of the term calendar year in the standard that maintenance intervals start on January 1 and end on December 31? This would make all maintenance due on December 31, and December would be a very busy time. Does this mean that if I do maintenance on something with a maximum interval of six calendar years in June of 2011 that it will be due again on January 1 of 2017 instead of June 1 of 2017? We believe that the drafting team intends for maintenance to be due after a given number of years that begins to elapse immediately after the previous maintenance is completed so that in the previous example the maintenance would be due on June 1, 2017. Please remove the word calendar from the maximum maintenance intervals to remove this confusion.

In the header of Tables 1-1, 1-2, 1-3, and 1-5 there is a note that says "Table requirements apply to all components of Protection Systems except as noted." Since each table only applies to the specific component type shown in the header, we do not understand what this note means. The definition given for component only makes the note more confusing. Please clarify the note. Additionally, BPA is voting no during this round due to an issue with the Applicability Section and Section 4.2. Once this

issue is clarified, BPA would be in support of a yes vote. Issue: Section 4.2 Facilities lists 5 separate items that the standard is applicable for (4.2.1. – 4.2.5). However Requirement 1 uses language that only addresses one of the items (4.2.1). There is no language contained anywhere within any of the requirements in PRC-005-2 that apply to the types of protection systems described in Applicability Sections 4.2.2 – 4.2.5. Therefore, it could be argued that this leaves it open to interpretation as to whether UFLS/UVLS/SPS are addressed by R1. In the NOPR (¶ 105), FERC states that "the Requirements within a standard define what an entity must do to be compliant". Further, in Order 693 (¶ 253) FERC explicitly states that "compliance will in all cases be measured by determining whether a party met or failed to meet the Requirement". Given this, then from a compliance perspective, the actual applicability of the standard appears to not be as broad as intended. We ask that this issue be resolved by modifying the language in R1 in a manner that explicitly encompasses all types of protection systems to which it is intended to be applied.
Group
Progress Energy
Jim Eckelkamp
Comments on Draft Standard 1. Table 1-1, 2nd row, 2nd bullet: The comment "(see Table 2)" does not apply to this bullet, but applies to the first bullet. 2. Table 1-3, 2nd row: Need to add "(See Table 2)." Comments on Implementation Plan 1. Section 3a states that "The entity shall be at least 30% compliant on the first day of the first calendar quarter 2 calendar years following applicable regulatory approval…" If regulatory approval occurs on January 31, 2012, does this mean that the entity has until December 31, 2014 to be 30% compliant? It might be beneficial to provide an example explaining "calendar year." Comments on Supplementary Reference 1. Table of Contents does not list Section 15.4 2. Page 54, last paragraph, last sentence: "…advances that are may be coming…" 3. Page 65, 5th paragraph: VLRA should be VRLA 4. Page 67, 4th paragraph, 4th sentence: "…typically looking for on the plates…" 5. Page 69, 4th paragraph, last sentence: "…Grounds because to of the possible…" 6. Page 69, 5th paragraph, 2nd sentence: "For example, to do I need…" 7. Page 70 5th paragraph, 5th sentence: "A manufacturer of…" 8. Page 70 5th paragraph, 6th sentence: "…by a third manufacturer's equipment…" 9. Page 71, first line: "…(impedance, conductance, and resistance)…"
Group
SPP reliability standard development Team
Jonathan Hayes
Yes
Yes
No
If the maintenance is done prior to the maximum interval would it then reset the clock. Or should it read that maintenance and testing should be done at least once per quarter etc. We would like to see the plan split up into generation time horizons and transmission time horizons, these can be significantly different.
No
Would like more clarification in table 1-5 to address verification tests on different circuits. Is this an end to end test or partial test can you test one part of the circuit one way and another a different way? Should table 1-5 read Complete a terminal test of unmonitored circuitry?
Group
Western Electricity Coordinating Council
Steve Rueckert

No
The proposed PRC-005-2 standard is an improvement over the four standards that it will replace. However, section 4.2 identifies five types of protection systems that the standard is applicable to, but the language of Requirement 1 indicates that applicable entities need to establish a Protection System Maintenance Program (PSMP) for the Protection Systems designed to provide protection for BES Element(s) (Part 4.2.1 of Section 4.2). We believe the intent is to have a PSMP for all Protection Systems identified in Section 4.2 and that the language of Requirement 1 may cause confusion or be misleading. We suggest changing the language of Requirement 1 from: Each Transmission Owner, Generator Owner, and Distribution Provider shall establish a Protection System Maintenance Program (PSMP) for its Protection Systems designed to provide protection for BES Element(s). to: Each Transmission Owner, Generator Owner, and Distribution Provider shall establish a Protection System Maintenance Program (PSMP) for its Protection Systems identified in Section 4.2.
Group
Pepco Holdings Inc
David Thorne
Yes
Yes
No
1. Are the bullet items listed for the R2 Severe Violation Severity Level , Item 5 an "and" or an "or"? 5) Failed to: • Annually update the list of components, • Perform maintenance on the greater of 5% of the segment population or 3 components, • Annually analyze the program activities and results for each segment. 2. The wording of the R3 Lower Violation Severity Level seems to imply that an entity that fails to complete 0% (i.e., completes 100%) of its maintenance correctable issues is non-compliant. Entity has failed to complete scheduled program on 5% or less of total Protection System components. OR Entity has failed to initiate resolution on 5% or less of identified maintenance correctable issues. The following re-phrasing is suggested: Entity has failed to complete scheduled program on greater than 0%, but no more than 5% of total Protection System components. OR Entity has failed to initiate resolution on greater than 0%, but less than or equal to 5% of identified maintenance correctable issues.
Yes
The Supplementary Reference and FAQ should be an attachment to the standard (Appendix A)and not just referenced. If not attached it will not be readily accessible to those that will be using the standard.
There were numerous comments submitted for each of the previous drafts indicating that the 3 month interval for verifying unmonitored communication systems was much too short. The SDT declined to change the interval and in their response stated: "The 3 month intervals are for unmonitored equipment and are based on experience of the relaying industry represented by the SDT, the SPCTF and review of IEEE PSRC work. Relay communications using power line carrier or leased audio tone circuits are prone to channel failures and are proven to be less reliable than protective relays." Statistics on the causes of BES protective system misoperations, however, do not support this assertion. The PJM Relay Subcommittee has been tracking 230kV and above protective system misoperations on the PJM system for many years. For the six year period from 2002 to 2007, the number of protective system misoperations due to communication system problems was lower (and in many cases significantly lower) than those caused by defective relays, in every year but one. Similarly, RFC has conducted an analysis of BES protection system misoperations for 2008 and 2009, and found the number of misoperations caused by communication system problems to be in line with the number attributed to relay related problems. If unmonitored protective relays have a 6 year maximum maintenance/inspection interval, it does not seem reasonable to require the associated communication system to be inspected 24 times more frequently, particularly when relay failures are statistically more likely to cause protective system misoperations. As such, a 12 or 18 calendar month

interval for inspection of unmonitored communication systems would seem to be more appropriate. FAQ II 6 B states that the concept should be that the entity verify that the communication equipment...is operable through a cursory inspection and site visit. However, unlike FSK schemes where channel integrity can easily be verified by the presence of a guard signal, ON-OFF carrier schemes would require a check-back or loop-back test be initiated to verify channel integrity. If the carrier set was not equipped with this feature, verification would require personnel to be dispatched to each terminal to perform these manual checks. The SDT responded that they still felt the 3 month interval as stated in the standard was appropriate. PHI respectfully requests that the SDT reconsider this issue and also cite what "specific statistical data" they used to validate that unmonitored communication systems are 24 times more prone to failure than unmonitored protective relays.
Individual
Joe O'Brien
NIPSCO
Yes
Sub-tables are good. A related question: Some devices such as reclosers and circuit breakers may include batteries within the device itself. Does Table 1-4 apply to such batteries and DC supply? Recloser batteries do not provide access to intercell connections.
No
This new standard's calibration intervals outlined here will require additional staff at our organization. In order to get people hired and trained the implementation plan should allow more time for the phase-in period. From experience, calibration should have been de-emphasized since more concerns are discovered during full tests.
no comments at this time
Yes
We used the FAQ Supplemental Reference while reviewing this draft standard and found it useful.
The present PRC-005 standard is 2 pages while the proposed PRC-005-2 is 22 pages, with an implementation plan of 4 pages and a supplemental document of 87 pages. The review process appears to be somewhat daunting especially considering that NERC is trying to simply things with such concepts as the "traffic ticket" approach. In R3 we're not sure if there is a time requirement regarding the completion of the resolution process. We like the use of "calendar year" in requirements which should provide flexibility in getting the work completed. Another comment for our response concerns Table 1-2, Communications Systems (page 11): The first maintenance interval is 3 calendar months. Does this mean the same as 1 calendar quarter? 1. Example for 3 calendar months:Maintenance performed on 1/4/11. Next maint due by 4/30/11. Maintenance performed on 4/12/11. Next maint due by 7/31/11. Maintenance performed on 7/30/11. Next maint due by 10/31/11. This would yield 3 inspections for 2011. Maintenance performed on 10/12/11. Next maint due by 1/31/12. 2. Example for 1 calendar quarter: Maintenance performed on 1/4/11. Next maint due by 6/30/11. This would yield 4 inspections for 2011 (1 per quarter).
Individual
Linda Jacobson
Farmington Electric Utility System
Yes
Yes
No
VSL on R2: Lower criteria item 1; the wording is identical High VSL. FEUS recommends keeping the criteria in the Lower VSL.
No
Individual
Greg Rowland

Duke Energy
Yes
We believe the table could be improved further to aid compliance by adding a footnote to the term “baseline” in the sub-tables 1-4(a), 1-4(b) and 1-4(f). The following proposed footnote text is taken from page 65 of the Supplementary and FAQ Reference Document: “Often for older VLRA batteries the owners of the station batteries have not established a baseline at installation. Also for owners of VLA batteries who want to establish a maintenance activity which requires trending of measured ohmic values to a baseline, there was typically no baseline established at installation of the station battery to trend to. To resolve the problem of the unavailability of baseline internal ohmic measurements for the individual cell/unit of a station battery, all manufacturers of internal ohmic measurement devices have established libraries of baseline values for VRLA and VLA batteries using their testing device. Also several of the battery manufacturers have libraries of baselines for their products that can be used to trend to.”
Yes
No
Typographical error - the High VSL for R2 has been incorrectly changed to “within three years” from “within four years”. This is now the same as the Lower VSL.
Yes
Along the lines of what we have suggested in our comment to Question #1 above, we believe it would make compliance more certain if selected language from the Supplementary reference could be incorporated into the standard, either directly in requirements, or in footnotes.
The Standard Drafting Team has done an outstanding job on this standard. We are voting “Affirmative” but note that implementation questions remain, particularly with regards to classifying component attributes as “monitored”, “unmonitored”, “internal self diagnosis”, “alarming”, “alarming for excessive error”, and “alarming for excessive performance degradation”. The sheer size of the population of protective relays, communications systems, voltage and current sensing devices, batteries, and dc supply components means that the size of the effort required to categorize each individual component could drive us to test and maintain on the more frequent unmonitored time intervals, simply because of the difficulty in assembling “monitored” compliance documentation.
Individual
Steve Alexanderson
Central Lincoln
Yes
Yes
Yes
No
The first FAQ under 2.3.1 is incorrect, referencing a FERC informational filing. Included in the filing was a WECC test that was never approved by the WECC board and is not being used. Using this document as suggested will get WECC entities into trouble.
As we stated two ballots ago, we continue to believe that IEEE battery standard quarterly maintenance was never intended to be performed at a maximum interval of three months. Instead, three months is a target value that might be extended due to emergency. We continue to support a maximum interval of four months for these activities.
Individual
Bob Thomas
Illinois Municipal Electric Agency
Yes
Yes

No
The scope of the equipment to which the draft standard applies is still overly broad. Specifically, PRC-005-2 should not apply to non-relay equipment for UFLS and UVLS systems. Subjecting UFLS and UVLS batteries, instrument transformers, DC control circuitry, and communications to the requirements of PRC-005-2 would drastically increase the scope of equipment covered by the standard, with no corresponding benefit to reliabiltiy of the BES. This comment/recommendation is provided to address the resource and customer service interests of a TO and/or DP systems serving distribution load. Illinois Municipal Electric Agency supports comments submitted by the Transmission Access Policy Study Group.
Individual
Joe Petaski
Manitoba Hydro
Yes
The restructured tables are an improvement, but we suggest that conductance (siemens) should be listed as an acceptable measurement in addition to the resistance measurements already included in the tables.
Yes
No
VSL for Requirement 2: -Needs to use consistent terminology. The standard requirements refer to components and component types, not elements. -The violation “Entity has Protection System elements in a performance-based PSMP but has failed to reduce countable events to less than 4% within three years” appears in both the Lower VSL column and the High VSL column. The violation cannot be both Lower and High. VSL for Requirement R3: -Suggested wording “completed its scheduled program”.
A red line was not provided making this document difficult to review. We suggest that a redline of this document be posted.
-Grace periods Grace periods should be permitted on the maintenance time intervals. While we understand that grace periods can be built into a PSMP, maintenance decisions that compromise reliability may still have to be made just to meet the specified time intervals and avoid penalty. An example of this would be removing a hydraulic generator from service at a time of low reserve to meet a maintenance interval and avoid non-compliance (removing an asset in a time of constraint). Grace periods are also required in the case of extreme weather conditions. Such conditions may make it unsafe to perform maintenance within the maintenance interval or may create a risk to reliability if the equipment being maintained is removed from service during these conditions. Utilities need to retain a reasonable amount of discretion and flexibility to make maintenance decisions that are best for reliability without risking non-compliance. -Battery Check Interval Manitoba Hydro maintains our position that the 3 month battery check interval should be extended to 6 months. The 3 month interval is too frequent based on our experience and while IEEE std 450 (which seems to be the basis for table 1-4) does recommend intervals, it also states that users should evaluate these recommendations against their own operating experience. With the 3 month battery check frequency and no allowance for a grace period, there may be a negative impact on reliability caused by diverting resources away from projects that are critical to reliability to meet this maintenance interval.
Individual
Mike Hancock
Shermco Industries
Yes
Yes

Yes
No
Please provide clarification on "Communications" in regards to the following: If our customers are utilizing Schweitzer SEL311 relays and utilizing the fiber for transfer trip, is this considered a communications circuit? Our experiences in regards to testing these devices that have transfer trips out into a main substation, that could affect a main ring tie or open a major 138kV loop, are that the T&D utilities will not allow us to perform these tests and trip their breakers. Therefore, what is required to satisfy testing? In regards to Function / Trip testing, if we have a sudden pressure device, this is considered an auxiliary relay and the sudden pressure relay itself is not required to be tested. However, the trip path is required to be tested for DC tripping, if it directly trips the breaker feeding the BES, on the DC Control verification testing. Please clarify if this is correct.
Individual
Michael Crowley
Dominion Virginia Power
Yes
Yes
No
Comments: IEEE battery maintenance standards call for quarterly inspections. These are targets, though, not maximums. An entity wishing to avoid non-compliance for an interval that might extend past three calendar months must implement a policy of two months with one month of grace period thereby increasing the number of inspections each year by half again. This is unnecessarily frequent. We suggest changing the maximum interval for battery inspections to 4 calendar months. For consistency, Dominion suggests that all battery maintenance intervals expressed as 3 calendar months be changed to 4 calendar months.
Individual
Edward J Davis
Entergy Services
In Section 4.2, ‘Facilities’ add the following subsection 4.2.6: Protection Systems for generating units in extended forced outage or in inactive reserve status are excluded from the requirements of this standard. However, the required maintenance and testing of the Protection Systems at these units must be completed prior to connecting the units to the Bulk Electric System (BES). Reason for the above comment: The above units are not connected to the BES and therefore do not affect the reliability of the BES. However, to ensure the reliability of the BES, required maintenance and testing of the Protection Systems at these units must be completed prior to connecting them to the BES.
Individual
Thad Ness
American Electric Power
Yes
No
On page 2 of the implementation plan, it is indicated that PRC-005-1, PRC-008-0, PRC-011-0 and PRC-017-0 shall be retired and that entities will be required to identify which components will be

addressed under PRC-005-1 or PRC-005-2. There is no wording to cover those components that are still being addressed under PRC-008-0, PRC-011-0 or PRC-017-0 during the implementation period.
No
This standard encompasses a very broad range of component types and functionality. It also encompasses broad segments of the BES. The proposed VSLs and VRFs place the same level of severity or priority on facilities that serve local load with that of an EHV facility. The percentages indicated in the VSLs seem to be too strict based upon the vast quantity of elements in scope and broad range of application.
No
Individual
Jose H Escamilla
CPS Energy
Yes
Yes
Yes
No
Table 1-5 The new standard requires that every 6 years it is verified that “each trip coil is able to operate the breaker,…”. The supplementary reference states that this requirement can be met by tracking real-time fault-clearing operations on the circuit breakers. With transmission breakers typically having dual trip coils, how can tracking real-time operations meet this requirement? Would a breaker operations where relays in both the primary and secondary trip coils indicated operation be sufficient or would some type of trip coil monitoring that showed coil energization be needed? Additionally, regarding the verification of all trip paths of the trip circuit. If a microprocessor relay is used to trip a breaker, and two contacts are paralleled on the relay through a single test switch for breaker tripping, would it be necessary to verify each contact independently or could an assertion of both contacts through the test switch be adequate? In this instance, the functionality of each contact would be fully identical. Table 1-2 A 3-month inspection is required for communications equipment that does not have “continuous monitoring or periodic automated testing for the presence of the channel function, and alarming for loss of function” has to be verified that the communication equipment is “functional” with a 3-month site visit. Would a carrier on-off system, that did not perform periodic check back testing, but did have an alarm contact (loss of power, failure, etc.) that was monitored through SCADA would need to have a 3-month inspection? According to the supplemental reference, this inspection should be to verify that the equipment is “operable through a cursory inspection and site visit”. It sounds as if this cursory inspection and site visit would accomplish the same as the alarm contact. It does not appear that end-end functional testing of the blocking signal is required by what is provided in the supplemental reference. Is this correct? Table 1-3 The maintenance activity for the 12 calendar year testing should include a little more specificity. It should have something stating the values provided to the relay are accurate. I know that this discussed in the supplemental reference, but requirement in Table1-3 sounds as if any relay that measured for loss of signal, such as a loss-of-potential function, would be sufficient when the purpose to verify that the signal not only gets to the relay but also has some accuracy as needed by the application of the relay.
Group
Tennessee Valley Authority
Dave Davidson
Yes
However, The requirement to perform battery cell internal ohmic measurements every 18 months for vented lead-acid batteries is excessive, and no technical justification is provided for an 18-month

interval. A 3-year internal ohmic test frequency is adequate to prove battery integrity. IEEE 450 does not provide a recommended interval for internal ohmic measurements. For standard capacity testing, the recommended interval is no greater than 25% of expected battery life. Our normal battery life is 20+ years, so the recommended capacity test interval would be about 5 years. EPRI also recommends capacity testing at 5 year intervals. There is no justification for performing internal ohmic measurements every 18 months (which equals every 7.5% interval of the expected battery life). Recommendation: Set the interval for battery internal cell ohmic testing at 3 years.
Yes
No
TVA has 590 Pilot Relay (Carrier Blocking) Terminals that are tested twice a year. After an extensive study of carrier failures over a 5-year period, it was determined that we were not having any failures that could have been prevented by a functional test. In January 2008, we reduced our frequency from 4 times per year to 2 times per year. The failure rate has remained about the same since that change. As PRC 005-2 currently states, the PM frequency would be 3 months. Allowing for a one-month grace period would actually require the interval to be set at 2 months. Therefore, the interval we used prior to 2008 (4 times per year) still would not make TVA compliant with the stated 3 month interval. TVA Power Control Systems is in the process of developing extensive PM tests for carrier terminals to complement the existing PM program. This PM would record signal levels, reflected power, line losses, and other pertinent data. It is my position that this PM will improve reliability more than increasing the frequency of the functional test.
No
Individual
Melissa Kurtz
US Army Corps of Engineers
Yes
Yes
Yes
Yes
The reference material provides a significant insight into the intent of the proposed changes to the standard. In some cases an interpretation is provided which is not supported by the explicit interpretation of the standard text. The SDT is encouraged to either attach the reference material to the standard or add relevant sections to standard as Background. The Background section could reference the Supplemental Reference & FAQ. The reference material provides more detail indicating that “Voltage & Current Sensing Device circuit input connections to the protection system relays can be verified by (but not limited to) comparison of measured values on live circuits or by using test currents and voltages on equipment out of service for maintenance. . . . . The values should be verified to be as expected, (phase value and phase relationships are both equally important to verify).” This interpretation is not consistent with the text of the standard and would suggest that it be incorporated into Table 1-3.
Section 4.2.5.4 - please clarify generator connected station service transformer. We believe this to mean a station service transformer with no breaker between the transformer and teh generator bus. R3 - the term 'initiate resolution' is vague and needs to be further defined. Does this mean putting in a work order or is further action required. Data Retention: The proposed standard clarifies that two of the most recent records of maintenance are to be retained to demonstrate compliance with the prescribed maintenance intervals. When equipment is replaced, the reference information indicates that the information associated with the original equipment must be retained to show compliance with the standard until the performance with the new equipment can be established. This is not explicitly stated in the requirements and warrants a comment.

Group
Imperial Irrigation District
Jose Landeros
Yes
Yes
Yes
No
Group
PNGC Comment Group
Ron Sporseen
No
We agree the changes to the tables have added clarity, but disagree with the maintenance intervals for DC supply. Comments: “PNGC’s comment group views the Maximum Maintenance Interval for station DC Power Supply (Table -14a/b/c/d) to be unnecessarily onerous and restrictive to many smaller-rural entities, in the west and probably throughout the US, and this prevents us from being able to support PRC-005-2 as written. We make these comments with the understanding that others have made similar comments in the past but we feel strongly that this is an important issue worthy of further review by the SDT. We believe a quarterly inspection schedule can be met while at the same time allowing entities the flexibility they need. IEEE 1188-2005 suggests a quarterly inspection schedule for lead acid batteries and we believe the standard interval for verifying and inspecting dc supply should be 3 months with a maximum interval of 6 months. This meets the quarterly threshold and gives some flexibility to account for unusual conditions. There are substations in Pacific Northwest rural areas that can be inaccessible during long periods of time during the winter, potentially exposing an entity to sanction if weather conditions prevent access to equipment for an extended period of time. Additionally, due to a smaller workforces and greater distances between equipment subject to PRC-005, small-rural entities face obstacles that large entities may not have. The three month maximum interval assumes ideal conditions and resource access and is not realistic. We thank the SDT for considering our comments.”
Yes
Yes
Yes
Section 9.2 (copied below)indicates that small entities can utilize Performance-Based PSMP if they aggregate with other entities. Does this section indicate that only a parent entity with individually owned components can aggregate, or can independent entities under a G&T aggregate? In other words, individual DP/LSE/TOs with different audits. Can they aggregate under a common PSMP for performance based maintenance? 9.2 Frequently Asked Questions: I’m a small entity and cannot aggregate a population of Protection System components to establish a segment required for a Performance-Based Protection System Maintenance Program. How can I utilize that opportunity? Multiple asset owning entities may aggregate their individually owned populations of individual Protection System components to create a segment that crosses ownership boundaries. All entities participating in a joint program should have a single documented joint management process, with consistent Protection System Maintenance Programs (practices, maintenance intervals and criteria), for which the multiple owners are individually responsible with respect to the requirements of the Standard. The requirements established for performance-based maintenance must be met for the overall aggregated program on an ongoing basis. The aggregated population should reflect all factors that affect consistent performance across the population, including any relevant environmental factors such as geography, power-plant vs. substation, and weather conditions.

Group
Arizona Public Service Company
Janet Smith, Regulatory Affairs Supervisor
No
Although considerable clarity was achieved in the structuring of the table for the different types of technologies associated with the DC supply, there is issue on the maximum allowable intervals. The standard remains too prescriptive in the intervals and maintenance activities. As an example it is believed the intent of the interval for verifying voltages and inspecting electrolyte levels and unintentional grounds level would be every 3 months. However, for the entity to ensure compliance and not incur a violation it would have to have a shorter interval, probably every 2 months just to ensure compliance and not incur a violation. The 3 month interval is in question based on programs that have been in service for many years where four months have been proven as reliable for operation, an even shorter period than 3 or 4 months is not only a burden but an unnecessary expense without a benefit of increase reliability of the Bulk Electric System.
Yes
NERC continues to be too prescriptive in the standard. For example, Table 1-4(a) requires battery verifications and inspection every three months. We have been performing similar tests every four months for over a decade, with no adverse consequences. Although FERC Order 693 directs NERC to establish maximum allowable intervals, the maximum interval must be “appropriate to the type of protection system and its impact on the reliability of the Bulk-Power System.” (Order 693 at 1475) The Standard Drafting Team (SDT) has not demonstrated a mechanism that connects the maximum maintenance interval with its impact on the reliability of the Bulk-Power System. An example can be found on the bottom of page 18 and the top of page 19 of the Consideration of Comments on Protection System Maintenance [Project 2007-17] for draft 3. Although the commenting organization provided a concrete example of successful maintenance under a longer interval, the Standards Drafting Team commented that it “… believes that 18-months is the proper interval for this activity.” (Emphasis added) An organization cannot challenge the SDT’s beliefs, only facts. The basis for each maximum maintenance interval, with appropriate linkage to its impact on the reliability of the Bulk-Power System, needs to be published and voted upon so that factual based proposals to modify the maximum interval can be rationally challenged.
Individual
Kenneth A. Goldsmith
Alliant Energy
Yes
Yes
No
The LOW and HIGH VSL for R2 are the same. There are additional possibilities for the LOW, but it is possible to be in both the LOW and HIGH VSL at the same time. We recommend removing #1 in the LOW VSL category to resolve the issue.
Yes
Comment 1 If PRC-005-2 is going to incorporate PRC-008 (UFLS) and PRC-011 (UVLS) the Purpose needs to be revised to include Distribution Protection Systems designed to protect the BES. Comment 2 We do not believe a distribution relaying system, designed to protect the distribution assets, that may open a transmission element (ie; breaker failure) should be considered part of the BES Protection System. R1 should add the following sentence “Distribution Protection Systems intended solely for the protection of distribution assets are not included as a BES Protection System, even if they may open a BES Element.” Comment 3 Table 1-5 (Component Type – Control Circuitry) Item 4 –

“Unmonitored control circuitry associated with protective functions” require a 12 calendar year maximum maintenance interval. We believe UFLS and UVLS control circuitry should be exempted from this requirement. It would take multiple failures to have any impact, and the impact on the BES would be minimal.
Group
MRO's NERC Standards Review Subcommittee
Carol Gerou
Yes
Yes, however, in the “Supplemental reference and FAQ” document on page 65 this is one area of concern. Page 65, paragraph 4 “… the type of test equipment used to establish the baseline must be used for any future trending of the cells internal ohmic measurements because of variances in test equipment and the type of ohmic measurement used by different manufacturer’s equipment.” While we understand the importance of creating a baseline, it’s not feasible to expect the test equipment to be the same as the manufacturer’s test equipment or even the same test equipment over the life of the battery. The expected life of a battery may be in excess of 15 years and it is not feasible to expect that the type of test equipment will not change during this period. We suggest changing the wording to read that consistent test equipment should be used to provide consistent/comparable results.
Yes
Yes
No
In the checkbox for Requirement R3 please change the wording to read, “Maintenance Correctable Issue - Failure of a component to operate within design parameters such that it cannot be restored to functional order by repair or calibration during performance of the initiating on-site activity. Therefore this issue requires follow-up corrective action.”
Individual
Kirit Shah
Ameren
Yes
Please carry the grid across in Table 1-4(f) to show the Maintenance Activities that go with the Component Attribute.
Yes
While we agree with the Implementation Periods, it would be best to alter R2 and R3 implementation such that components with maximum allowable intervals of 1 year or longer align with a true calendar year (i.e. begin with January 1).
Yes
Yes
1. Comments: Supplement FAQ 12.1 on page 51 final sentence states that documentation for replaced equipment must be retained to prove the interval of its maintenance. We oppose this because: the replaced equipment is gone and has no impact on BES reliability; and such retention clutters the data base and could cause confusion. For example, it could result in saving lead acid battery load test data beyond the life of its replacement. Since BES Element protection is the objective, we suggest a compromise of keeping the evidences of last test for the removed equipment and using that with the equivalent function replacement equipment commissioning or in-service date to prove interval. 2. Clarify p17 Table 1-4(e) interval meaning. We think this means we need to verify the Station dc supply voltage on 12 calendar year interval if unmonitored, or no periodic maintenance if monitored as stated. 3. In Supplement examples on pp 22-23, replace “Instrumentation transformers” with “Verify that current and voltage signal values are provided to the protective relays” to be consistent with Table 1-3. 4. Remove “Reverse power relays” from the sample list of

generator devices in Supplement p31 because reverse power relays are applied for mechanical protection of the prime mover, not electrical protection of the generator. 5. Revise Supplement Figure 1 & 2 Legend p83 to align with Draft 4 (a) state “Protective relays designed to provide protection for BES Element(s)”. (b) state “Current and voltage signals provided to the protective relays” 6. Please add a Performance-Based maintenance example for control circuitry, and /or voltage and current sensing.
Measure M3 on page 5 should apply to 99% of the components. “Each … shall have evidence that it has implemented the Protection System Maintenance Program for 99% of its components and initiated….” PRC-005-2 unrealistically mandates perfection without providing technical justification. A basic premise of engineering is to allow for reasonable tolerances, even Six Sigma allows for defects. Requiring perfection may well harm reliability in that valuable resources will be distracted from other duties. 2. Define BES perimeter in accordance with Project 2009-17 Interpretation. Facilities Section 4.2.1 “or designed to provide protection for the BES” needs to be clarified so that it incorporates the latest Project 2009-17 interpretation. The industry has deliberated and reached a conclusion that provides a meaningful and appropriate border for the transmission Protection System; this needs to be acknowledged in PRC-005-2 and carried forward. The BOT adopted this 2/17/2011. 3. Battery inspection every 4 months is sufficient. IEEE battery maintenance standards call for quarterly inspections. These are targets, though, not maximums. An entity wishing to avoid non-compliance for an interval that might extend past three calendar months due to storms and outages must set a target interval of two months thereby increasing the number of inspections each year by half again. This is unnecessarily frequent. We suggest changing the maximum interval for battery inspections to 4 calendar months. For consistency, we also suggest that all intervals expressed as 3 calendar months be changed to 4 calendar months.
Individual
Rex Roehl
Indeck Energy Services
No
The tables are limited to a few battery technologies and will be out of date in short order with the many types of advanced batteries already on the market. The testing requirements should be performance based as opposed to prescriptive.
No
The last part of the implementation plan is vague, if not undefined. The implementation should “follow the previous maintenance intervals until all maintenance is transitioned to the new intervals.”
No
The VSL’s for R1 should combine the ones for Lower, Moderate and High VSL into Lower VSL. The Severe VSL should be moved to the Moderate VSL. Because R1 is administrative, it shouldn’t have High or Severe VSL’s. The R2 High VSL (3 yrs) is more stringent than the Severe VSL (5 yrs). The R3 VSL’s need to have combined numbers of components or percentages because small generators may only have 25 relays or 1 battery and would be categorized as High or Severe VSL with a few components affected. The percentage could apply to RE’s with more than 250 components included in the PSMP. The Medium VRF for R1 should be Low VRF because R1 is administrative. Only the performance of the maintenance has anything more than Low VRF. The Medium VRF for R2 is OK. Having a High VRF for R3 is without basis. R3 should have Medium VRF.
No
Individual
Kevin Luke
Georgia Transmission Corporation
No
We need clarification on the UFLS or UVLS system Station DC Supply test. We trip the high side device (non-BES asset) for each of our distribution stations UFLS or UVLS schemes, not the individual distribution breakers. It is hard to distinguish what maintenance interval and maintenance activities we should engage for Station DC Supply test. Since the device is not a distribution breaker as

mentioned in the Table 1-4 (a-f) we would be conservative and choose to perform maintenance at all our distribution stations with UFLS or UVLS schemes as per Table 1-4(a). Reading the statements in the Supplementary Reference and FAQ, we notice our devices perform similar functions as the distribution breakers. Reference pg 60 of Supp. Ref. and FAQ paragraph 4. Since tripping the high side device of a distribution transformer still constitutes a distributed system would our system meat the exclusion criteria although it is not a distribution breaker, would this meet the same requirements and exempt the station from Table 1-4(a) and require only maintenance for DC systems as per Table 1-4(e)? Please clarify. We recommend changing the term distribution breaker to distribution asset interruption device or non-BES equipment interruption device.
Yes
Yes
Yes
See comments for item 1 and continue clarification where we could include high side or distributed interrupting devices, exchange nomenclature removing distribution breaker and adding distributed interrupting device or non-BES equipment.
Individual
Andrew Z Pusztai
American Transmission Company, LLC
Yes
Yes, however, in the “Supplemental reference and FAQ” document on page 65 there are two areas of concern. - Page 65, paragraph 4 “… the type of test equipment used to establish the baseline must be used for any future trending of the cells internal ohmic measurements because of variances in test equipment and the type of ohmic measured used by different manufacturer’s equipment.” While ATC understands the importance of creating a baseline, it is not feasible to expect the test equipment be the same as the manufacturer’s test equipment or even the same test equipment over the life of the battery. The expected life of a battery may be in excess of 20 years and it is not feasible to expect that the type of equipment will not change during this period. - Page 65, paragraph 6 “… all manufacturers of internal ohmic measurement devices have established libraries of baseline values …” ATC question’s the availability of baseline libraries for all manufacturers considering the variety and longevity of installations.
Yes
Change the text of “Standard PRC-005-2 – Protection System Maintenance” Table 1-5 on page 19, Row 1, Column 3 to: “Verify that a trip coil is able to operate the circuit breaker, interrupting device, or mitigating device.” Or alternately, “Electrically operate each interrupting device every 6 years” Trip coils are designed to be energized no longer than the breaker opening time (3-5 cycles). They are robust devices that will successfully operate the breaker for 5,000-10,000 electrical operations. The most likely source of trip coil failure is the breaker operating mechanism binding, thereby preventing the breaker auxiliary stack from opening and keeping the trip coil energized for too long of a time period. Therefore, trip coil failure is a function of the breaker mechanism failure. Exercising the breakers and circuit switchers is an excellent practice. We would encourage language that would suggest this task be done every 2 years, not to exceed 3 years. Exercising the interrupting devices would help eliminate mechanism binding, reducing the chance that the trip coils are energized too long. The language as currently written in table1-5 row 1, will also have the unintentional effect of changing an entities existing interrupting device maintenance interval (essentially driving interrupting device testing to a less than 6 year cycle). Change the text of “Standard PRC-005-2 – Protection System Maintenance” Table 1-5 on page 19, Row 3, Column 2 to: “12 calendar years” The maximum maintenance interval for “Electromechanical lockout and/or tripping devices which are directly in a trip path from the protective relay to the interrupting device trip coil” should be consistent with the “Unmonitored control circuit” interval which is 12 calendar years. In order to test the lockout relays, it

may be necessary to take a bus outage (due to lack of redundancy and associated stability issues with delayed clearing). Increasing the frequency of bus outages (with associated lines or transformers) will also increase the amount of time that the BES is in a less intact system configuration. Increasing the time the BES is in a less intact system configuration also increases the probability of a low frequency, high impact event occurring. Therefore, the Maximum Maintenance Interval should be 12 years for lockout relays. ATC recognizes the substantial efforts and improvements to PRC-005-2 that have been made and appreciate the dedicated work of the SDT. We appreciate the removal of Requirement R1.5 and R4 and other clarifications from draft 3. ATC's remaining concern for PRC-005-2 is with definition and timelines established in Table 1-5. ATC believes that, as written, the testing of "each" trip coil and the proposed maintenance interval for lockout testing will result in the increased amount of time that the BES is in a less intact system configuration. ATC hopes that the SDT will consider these changes.

Group

The Detroit Edison Company

Daniel Herring

Yes

Yes, the tables do provide more clarity. It is much easier to understand the requirements now that they are broken down by technology, and the exclusion of intervals on certain activities based on the individual monitoring attributes is helpful. I appreciate the thought that went into revising this.

Yes

No

R2 - It appears that the Lower VSL point 1) and High VSL are identical.

No

Countable Event - This definition should be clarified. As it stands, it appears that if a technician were to adjust the settings on an electromechanical relay - even if it were not outside of the entity's acceptable tolerance - it would need to be classified as a countable event. I would recommend that the definition be limited to repairing or replacing a failed component during the maintenance activity. These activities would address conditions that would potentially cause a Protection System misoperation (either a failure to trip or an unintentional trip). Routine maintenance activities to bring component test values back within tolerance should be excluded from the definition of a Countable Event. These activities are performed to keep the protection systems performance at its most ideal state. In addition, the definition as stated appears to classify battery maintenance activities such as cleaning corrosion, adding water, or applying an equalize charge, as countable events. If this is the intent, I disagree. These are activities that are expected to occur on a regular, routine basis due to the chemical properties of the battery (as described at length in the Supplementary Reference). As such, they should also not be classified as countable events. Table 1-1 and Table 1-5 Based on experience with DECo equipment, a 6 year interval for testing monitored relays and performing tests on the breaker trip coil is substantially shorter than required. Currently, the interval for both is 10 years. This interval lines up both with the Transmission Owner's interval for relay maintenance as well as the maintenance interval for the associated current interrupting devices. I would recommend that these intervals be extended, at minimum, back to the 7 year interval proposed in Draft 2 - if not longer. Table 1-4 (a, b, c, e) - Station dc supply using any type of battery I recommend that the maintenance activity to "Verify: Station dc supply voltage" be clarified to state that the voltage should be measured at the positive and negative battery terminals. Until you get to page 72 of the Supplementary Reference, you do not know if this means to check the battery voltage or the bus voltage. The "Station dc supply" could refer to the entire dc system. It needs to be made clear in the table that you are referring to the battery. Also, I noticed that there is no longer a requirement to measure individual cell voltages. I was wondering if you could explain the rationale behind that. Checking for voltages that are out of specification in individual cells helps to identify weak cells that may need to be replaced, if corrective action taken on them does not improve their condition. Individual cell voltage readings, along with ohmic readings, have been an industry standard that I believe many, if not most, companies adhere to. Table 1-4 (a, b, c, d) I recommend eliminating the 3 month requirement. We have found annual inspections to be sufficient in catching problems early enough to take corrective action. Page 30 of the Supplementary Reference states that the SDT

believes that routine monthly inspections are the norm. While this may be the case at manned stations, it is not at unmanned stations. The amount of paperwork that would be required to demonstrate compliance is overwhelming and would be an immense burden. I have seen your suggestion in past draft comments of the same nature that if we don't want to do the 3 month inspections, then we should utilize more advanced monitoring. This is not something that can be implemented in a short time frame. It would take years to put all of that technology in place, and is rather cost prohibitive. Furthermore, some of the monitoring technologies that would enable you to forgo the 3 month requirement do not exist yet (to my knowledge). I recommend keeping with the 18 month requirement. If that seems too long, based on past experience I think a 12 month requirement would suffice. Table 1-4 (c) I propose keeping the option to evaluate ohmic values to baseline. Table 1-4 (a, b) For the requirement to evaluate the ohmic values to baseline, is a checkbox stating that you did this sufficient, or would a report/graph/etc listing the actual baseline and current value be required? Table 1-4 (f) The first attribute is regarding high and low voltage monitoring and alarming of the battery charger voltage to detect charger overvoltage and charger failure. Would a low voltage alarm combined with high voltage shutdown (but not a high voltage alarm) meet this requirement? The high voltage shutdown will shut the charger down in a high voltage condition, and therefore result in a low voltage alarm, so the outcome is the same.
Individual
John Bee
Exelon
Yes
What kind of component we are talking about in table 1.4(d) “Station DC Supply using Non Battery Based Energy Storage” for switchyard in nuclear plants?
In response to Exelon’s comments provided to drafts 1, 2, and 3 of PRC-005, the SDT did not explain why a conflict with an existing regulatory requirement is acceptable. The SDT previously responded that a conflict does not exist and that the removal of grace periods simply is there to comply with FERC Order directive 693. In response to draft 3 of PRC-005, the SDT stated that "If several different regulatory agencies have differing requirements for similar equipment, it seems that the entity must be compliant with the most stringent of the varying requirements. In the cited case, an entity may need to perform maintenance more frequently than specified within the requirements to assure that they are compliant." Again this does not explain why a conflict with an existing regulatory requirement is acceptable. This response does not answer or address dual regulation by the NRC and by the FERC. Specifically, the request has not been adequately considered for an allowance for NRC-licensed generating units to default to existing Operating License Technical Specification Surveillance Requirements if there is a maintenance interval that would force shutting down a unit prematurely or become non-compliant with PRC-005. Therefore, Exelon again requests that the SDT communicate with the NRC and with the FERC to ensure a conflict of dual regulation is not imposed on a nuclear generating unit without the necessary evaluation. In addition, the SDT still did not fully evaluate or address the concern related to the uniqueness of nuclear generating unit refueling outage schedules. Although Exelon Nuclear agrees with the SDT that the maximum allowed battery capacity testing intervals of not to exceed 6 calendar years for vented lead acid or NiCad batteries (not to exceed 3 calendar years for VRLA batteries) could be integrated within the plant’s routine 18 month to 2 year interval refueling outage schedule, the SDT has not considered that nuclear refueling outages may be extended past the 18 month to 2 year "normal" periodicity. There are some unique factors related to nuclear generating units that the SDT has not taken into consideration in that these units are typically online continuously between refueling outages without shutting down for any other required maintenance. Historically, generating units have at times extended planned refueling outage shutdown dates days and even weeks due to requests from transmission operations, fuel issues and electrical demand. Without the grace period exclusion currently allowed by existing maintenance programs, a nuclear plant will be forced to either extend outage duration to include testing on an every other refueling outage (i.e., every four years to ensure compliance for a typical boiling water reactor) or leave the testing on a six year periodicity with the vulnerability of a forced shut down simply to perform maintenance to meet the six year periodicity or a self report of non-compliance. To

ensure compliance, the nuclear industry will be forced to schedule battery testing on a four year periodicity to ensure the six year periodicity is met, thus imposing a requirement on nuclear generating units that would not apply to other types of generating units. The SDT response to this question in draft 3 is that "(t)he 18-month (and shorter) interval activities are activities that can be completed without outages – primarily inspection-related activities. An entity may need to perform maintenance more frequently than specified within the requirements to assure that they are compliant." Respectfully Exelon requests that the SDT review and evaluate the concern.
Individual
Glen Sutton
AtCO Electric ltd
Table 1-4: ATCO Electric has a number of remote substations that are difficult to access. The requirement for a 3 calendar month inspection for electrolyte level is too frequent. The requirement would become achievable if electrolyte level inspections were moved to the 18 calendar months category, or if the 3 calendar months frequency were increased to 8 calendar months. Table 1-4(b): for the same reasons, the requirement of a 6 calendar month inspection of individual battery cell/unit internal ohmic values is too frequent. The requirement would become achievable if battery cell/unit internal ohmic value inspections were moved to the 18 calendar months category, or if the 6 calendar months frequency were increased to 14 calendar months. Table 1-4(c): the requirement of a 6 calendar year performance service or modified performance capacity test should be removed. From our experience, there is no benefit in doing battery load tests. Instead, we apply verification of battery intercell resistance as a more efficient method of monitoring battery condition, which provides an 8 to 14 month lead time to replace a battery unit/cell before it goes dead.
Table 1-2: the requirement for a 12 calendar year verification for the channel and essential signals' performance should be removed. We do not see benefit in the maintenance activities under level 2 (the 12 calendar year requirement) and suggest merging it with level 3 (the "no periodic maintenance specified" requirement). The 'loss of function' alarm, will be considered as a countable event to fall under requirement R3 and dealt as maintenance correctable issue. Table 1-5: the requirement of 6 calendar year verification for electrical operation of electromechanical lockout and/or tripping auxiliary devices should be revisited, considering that: • It is not feasible to exercise a lockout relay during maintenance due to high risk to the in-service facility, as well as the complexity of lockout relay connections and protection schemes. Instead, we propose a DC ring test, which verifies the continuity of control circuitry and eliminates the risk impact of lockout or auxiliary tripping device operations. • The interval is too frequent. The requirement would become achievable if the 6 calendar year frequency were increased to 12 calendar years, to be in line with microprocessor relay maintenance frequency
Individual
Claudiu Cadar
GDS Associates
Yes
Yes
No
• Suggest clarification of the VSL for R2. It appears that R2 Lower VSL is also contained in the R2 High VSL. • If the maintenance is completed prior to the maximum interval, would it then reset the clock? Or should it read that maintenance should be done at least once per quarter, etc. • The plan should split into generation time horizons and transmission time horizons since these can be significantly different
Yes
The standard should include a footnote indicating this document as reference
A. Requirement R1 • Suggest changing the language in R1.2 to read "Identify which maintenance

method such as the time-based, performance-based (detailed in PRC-005 Attachment A), or a combination of the two would be appropriate to be used for each type of Protection System component. Based upon their own constructive type, all batteries associated with the station DC supply shall be included in a time-based maintenance program consistent with Table 1-4(a) through Table 1-4(f)" • Suggest changing the language for the first paragraph in R1.3 to read "Establish the occurrences associated with the time-based maintenance programs up to but no less than the time intervals specified in Table 1-1 through Table 1-5, and Table 2. Consequently, include all applicable monitoring attributes and related maintenance activities characteristic to each type of Protection System component specified in Table 1-1 through Table 1-5, and Table 2" • Suggest adding a sub-requirement such as R1.5 to read "Include documentation of maintenance, testing interval and their basis and a summary of testing procedures" B. Requirement R3 • The redline version of the standard is misleading. Requirement R3 is crossed out and then replacing requirement R7 which is also crossed out. • The wording "[…] initiates resolution of any identified maintenance correctable issues" it is vague. What a responsible entity should do to become compliant with this requirement? We also believe that is not sufficient to just "initiate resolution"; the standard should call for corrective actions to be performed within the maintenance time interval. • The "identified maintenance correctable issues" may not be a proper choice. The name of the new term suggests that is about issues that can be corrected during maintenance, while the definition from the clean version explains otherwise?! C. Additional requirement • Suggest adding a requirement to read "The Transmission Owner, Generator Owner, and Distribution Provider shall provide documentation of its PSMP and implementation to the appropriate Regional Reliability Organizations on request (within 45 calendar days)." • Add measure for the evidence on documenting the PSMP from the additional requirement D. General comments and notes • If you own electro-mechanical relays and microprocessor based relays is there a need to keep two different logs for these? • On table 1-4 the generator CTs should be tested earlier than the suggested 12 years due to exposure of continuous mechanical stress • Clarify table 1-5 to address verification tests on different circuits. Suggest that the Table 1-5 to read "Complete a terminal test of unmonitored circuitry" instead of the "Unmonitored control circuitry associated with protective functions" • In what instances (what extent) would the standard allow using the real time breaker operation to be considered maintenance as applicable to different types of relays involved in the real time event? This is briefly emphasized under TBM at paragraph 5.1 from the supplementary reference document?
Group
ISO/RTO Standards Review Committee
Albert DiCaprio
The SRC disagrees with the change to the term under 4.2.1. "Protection Systems designed to provide protection for BES elements." We support keeping the previous version's wording of 4.2.1. "Protection Systems applied on, or designed to provide protection for the BES." The revised wording expands the fundamental purpose of the NERC PRC-005 standard from being focused on ensuring relays intended to protect the reliability of the BES are maintained to a standard whose intent is to ensure all BES facilities have relay maintenance programs. Although we do not disagree with maintaining all relays, regardless of what their intended purposes are, it should not be the purpose of a NERC standard to police all protection schemes beyond those needed for interconnected reliability. There are numerous protective relays employed on facilities interconnected to the BES but their purpose may be for operating preference or service/equipment quality purposes such as reclosing schemes and transformer sudden pressure relays. We believe the NERC PRC-005 standard should be focused on maintenance of those protective relays which are needed to ensure that the loss of a single element does not cause cascading effects on the bulk power system.
Group
Transmission Access Policy Study Group
Cynthia S. Bogorad

The scope of the equipment to which the draft standard applies is over-broad. Specifically, PRC-005-2 should not apply to non-relay equipment for UFLS and UVLS systems. Subjecting UFLS and UVLS batteries, instrument transformers, DC control circuitry, and communications to the requirements of PRC-005-2 would drastically increase the scope of equipment covered by the standard, with no corresponding benefit to reliability, for the following reasons. In contrast to transmission and generation protection systems and SPSs, for which there are typically two protection systems per facility and therefore per fault, UFLS and UVLS deal with widespread events. For any under-voltage or under-frequency event, there are literally hundreds of UFLS/UVLS relays to respond. It is therefore far less critical if one UFLS or UVLS relay fails to operate properly. Furthermore, transmission is typically not radial (in fact, radials to load are excluded from the BES). But distribution circuits, where UFLS and UVLS systems are located, are usually radial. Testing some of the non-relay equipment to which the draft standard applies would require blacking out the customers served by that radial. In other words, the draft standard would require entities to definitely cause blackouts in an attempt to prevent very unlikely potential blackouts. This is plainly not justified from a harm/benefit perspective. Finally, many of the types of non-relay equipment to which the standard would apply are in effect tested by faults. Specifically, faults happen on distribution circuits (where UFLS and UVLS systems are located) more frequently than on transmission circuits, due to such things as animal contacts and car accidents. Any such fault is in fact a test of the all the equipment that is involved in clearing the fault. There is no need to require separate tests of that equipment, any more than we would require tests of a phone line that is used on an everyday basis; you already know that the phone works.
Individual
Gerry Schmitt
BGE
Yes
No comments.
Yes
No comments.
Yes
No comments.
Yes
The supplementary reference on page 30, under the question beginning “Our maintenance plan requires...” states that an entity is “out of compliance” if maintenance occurs at a time longer than that specified in the entity’s plan, even if that maintenance occurred at less than the maximum interval in PRC-005-2. But then on page 35, under the question, “How do I achieve a grace period without being out of compliance” provides an example of scheduling maintenance at four year intervals in order to manage scheduling complexities and assure completion in less in less than the maximum time of six calendar years. This is conflicting advice. The FAQ /supplementary reference should be revised so that it does imply that an entity is out-of-compliance by performing maintenance more frequently than required. Avoiding compliance risk is one reason to do this, but there are other valid motives not directly related to reliable protection system performance. Testing of PT’s and CT’s (12 year max) is non invasive and convenient to schedule at the same time as relays (6 year max) just to keep procedures consistent and reduce program administration. Testing of ties to other TOs or GOs may have to be scheduled more frequently than preferred in order to synchronize schedules.
No comments.
Group
FirstEnergy
Sam Ciccone
Yes
No
Although we agree with the timeframes being afforded to achieve compliance, we suggest the

following changes: 1. During the last comment period, we suggested changes to the wording regarding retirement of existing standards on page 2. We do no see a response to these comments. Therefore, we would like to reiterate that the four existing standards are to be retired upon the effective date of the new standard and not upon regulatory approval. 2. In 4a of the plan, since the timeframe for 30% completion is 3 calendar years, we suggest a change to three calendar years for the parenthetical phrase "(or, for generating plants with scheduled outage intervals exceeding two calendar years, at the conclusion of the first succeeding maintenance outage)". Change "two" to "three". 3. We suggest the implementation plan be included within the body of the standard. It is very burdensome for entities to have to look for the implementation plan and we believe that a "one-stop shopping" approach would alleviate this burden.

Yes

Yes

We do not agree with the following wording on page 37 of the reference document: (1) "If your PSMP (plan) requires more activities then you must perform and document to this higher standard." and (2) "If your PSMP (plan) requires activities more often than the Tables maximum then you must perform and document those activities to your more stringent standard." We continue to believe that the auditor is required to audit to the standard. If the standard requires maintenance intervals every 6 years, this is what the auditor should verify. This was also verified in the recent NERC Workshop at which it was confirmed that "auditors must audit to the standard". To this end, we also suggest changes to Requirement R3 as explained in our comments in Question 5.

FE offers the following additional comments and suggestions: We do not agree with the wording of requirement R3. The entity is only required to meet the minimum maintenance intervals of the standard as outlined in Tables 1 and 2. We offer a scenario where an entity states that they will go above the standard and maintain relays on a 4 year cycle. The standard, in meeting an adequate level of reliability, sates that this activity must be performed every 6 years. If the entity happened to miss the 4 year timeframe, deciding from a business standpoint to delay the maintenance to the 5th year, an auditor can find the entity non-compliant per the guidance and wording of the requirements in this standard. However, the entity still exceeded an adequate level of reliability by performing the maintenance within 5 years. This scenario would be very unfortunate to the entity that has essentially done their part in providing reliability to the bulk power system, yet they would be punished for not meeting their more stringent timeframes. This standard's guidance and requirements sends an adverse message to industry. It essentially punishes an entity for going above and beyond the standard except on a few rare occasions. If this were to happen, that entity, and possibly others, would not see the value in going above a standard. It would make entities meet the bare minimum requirements, essentially reducing overall system reliability. Therefore, we suggest the following wording for requirement R3: "R3. Each Transmission Owner, Generator Owner, and Distribution Provider shall implement its PSMP to ensure adherence to the minimum requirements as outlined in Tables 1 and 2, and initiate resolution of any identified maintenance correctable issues."

Individual

Michael Moltane

ITC

Yes

The re-structured tables are easier to use.

Yes

Yes

No

We agree with the combination of the two. One document with the FAQ's grouped with the supplemental topics makes it easier to review the whole topic.

For Battery System: - Table 1-4(a) o The maximum maintenance interval for the majority of the battery maintenance is listed at "18 calendar months". The current ITC Standard is "once per calendar year and a calendar year is defined as a twelve-month period beginning January 1st and ending December 31st ". ITC would like the maximum maintenance interval at "once per calendar year" -

Table 1-4(b) o VRLA (Valve Regulated Lead Acid) batteries have an additional inspection at 6 calendar months that includes inspecting the condition of all individual units by measuring the battery cell/unit internal ohmic values. This is in addition to the “18 calendar months” inspection. ITC would like to be consistent with the VLA (Vented Lead Acid) batteries and have only one internal ohmic value inspection once per calendar year. For Battery System: - Table 1-4(a) o The maximum maintenance interval for the majority of the battery maintenance is listed at “18 calendar months”. The current ITC Standard is “once per calendar year and a calendar year is defined as a twelve-month period beginning January 1st and ending December 31st “. ITC would like the maximum maintenance interval at “once per calendar year” - Table 1-4(b) o VRLA (Valve Regulated Lead Acid) batteries have an additional inspection at 6 calendar months that includes inspecting the condition of all individual units by measuring the battery cell/unit internal ohmic values. This is in addition to the “18 calendar months” inspection. ITC would like to be consistent with the VLA (Vented Lead Acid) batteries and have only one internal ohmic value inspection once per calendar year. Auxiliary Relays: • ITC does not agree with the 6 year interval for Aux relays in the trip circuit. Although they are EM relays they are simple and have very few moving parts. We believe the maintenance period for auxiliary relays should be 12 years and they should be in conjunction with the control circuit. We recognize that Draft 4 only includes auxiliary relays that are directly in the trip path. That is an improvement in Draft 4. In general, auxiliary relays are very reliable; only certain relay types have been proven to be problematic. A known relay type (HEA) has been proven to be problematic if not exercised frequently. The standard should not require a 6 year interval period for all other auxiliary relays. We believe problematic relays should be addressed through use of a NERC Alert process. Don’t cut down the tree for a bad apple.
Individual
Bill Middaugh
Tri-State G&T
On Table 1-2, page 11: The standard describes the following component attributes, “Any unmonitored communications system necessary for correct operation of protective functions, and not having all the monitoring attributes of a category below.” How does this apply to redundant communication systems? If the primary communications channel fails the protective relay automatically fails over to the back-up channel and continues to function properly. Are redundant communication channels excluded from this component attribute and associated interval? Please clarify the term correct operation and how it applies to redundant communication systems.
The draft standard requires the PSMP to include maintenance and testing intervals for Station DC supply associated with protective functions (including batteries, battery chargers, and non-battery-based dc supply). Does this requirement include DC systems (batteries not included in station batteries) used by communication systems necessary for the correct operation of protective functions?
On Page 19, Table 1-5, the standard requires that monitored electromechanical lockouts be maintained every 6 years. Why is there inconsistency in the interval between the monitored lockouts and monitored relays?
M1 - Why is the document necessary to be “current or updated?” Eliminate “or updated.” R1 VSL - Second item in Severe VSL is not addressed in any lower VSL. Should there also be a comparable violation in Lower and Moderate? R2 VSL – Keep the comment about the redundancy in Lower VSL and High VSL for clarifying the difference between the two.
Individual
Don Schmit
Nebraska Public Power District
No
Comments: The restructured tables are indeed an improvement; however the tables still need some work for clarity: Table 1-5: Unmonitored control circuitry has a maintenance activity of “Verify all paths of the control and trip circuits.” The wording of “control and trip circuits” leads to circuit verification of more than just trip circuits. In fact multiple circuits would have to verified, such as station house load transfer schemes. Providing documentation to an auditor to prove all paths have been tested will be difficult and is considered excessive. The paperwork required to prove compliance

is extremely excessive for this requirement and doesn't provide a benefit to reliability. Table 1-5: Table 1-5 requires trip checking every six calendar years for trip coils and electromechanical lockout and/or tripping auxiliary devices. Every six years is excessive, when sutiable monitoring is used. We recommend verification of these components be completed at the same frequency as the associated relay testing when monitoring is used. For electromechanical, no more than every 6 calendar years, for microprocessor, no more than 12 calendar years. Table 2: The interrelationship between Tables 1-1 through 1-5 and Table 2 is ambiguous. Tables 1-1 through 1-5 "component attributes" columns references Table 2 in many cases as the criteria for maximum interval. However, each table entry has a maximum maintenance interval listed as well. There are a few instances where the "trump" interval is not clear. Table 1-5 is a good example. Table 2 states that monitored devices (1-1 through 1-5) not having monitored alarm paths shall be tested every 12 years. However, Table 1-5 states that DC circuits with monitored continuity shall have no periodic maintenance. We suspect that Table 2 attributes needs further clarification to eliminate the confusion, both Table 2 attributes at first glance appear to say the same thing. However, after study it appears to address "detection" monitoring versus continuous (control center type) monitoring. We believe further distinguishing clarifications are needed to make it evident and clear.
Group
Western Area Power Administration
Brandy A. Dunn
Yes
Yes
Yes
Yes
Can the SDT add a better definition or clarification of "Calendar Year" as it pertains to PRC-005-2 and provide examples or parameters of Compliance with the Standard requirements and tables? Calendar Year is explained in various details within Pages 35-Pages 37 of the Supplementary Reference and FAQ. This important attribute of a TBM or TBM/CBM combination program is not easily found in the Table of Contents or section sub-headings.
Please explain or clarify the term "mitigating devices" used in Table 1-5 Control Circuitry, Page 19. This term is not well defined in the industry and not easily understood as "interrupting device" or "circuit breaker."
Group
Luminant
David Youngblood
Yes
No comments
Yes
No comments
Yes
No comments
Yes
The document was valuable in understanding PRC-005-2 by providing clarification using practical protective relay system examples. Below are two comments for further improvement. 1. It would be beneficial if the document could provide additional information for relaying in the high-voltage switchyard (transmission owned) - power plant (generation owned) interface. While Figures 1 and 2 are typical generation and transmission relay diagrams, it would be helpful if protective relays

typically used in the interface also be included. For example, a transmission bus differential would remove a generator from service by tripping the generator lockout. 2. Figures 1 and 2 refer to a “Figure 1 and 2 Legend” table which provides additional information on qualifications for relay components. Should a footnote be used to point toward Reference 1 (Protective System Maintenance: A Technical Reference) located in Section 16?
The red-lined version did not agree with the clean copy. In reading the "red lined" document it appears that R3 was intended to be "Each Transmission Owner, Generation Owner, and distribution Provider shall implement and follow its PSPM and initiate resolution of any identified maintenance correctable issues."
Group
NextEra Energy
Silvia Parada Mitchell
Yes
Yes
Yes
No
Thank you for your diligent efforts in writing the draft standard. The draft standard and associated documents are well written and we believe, after approval, will be instrumental to improving the reliability of the BES. We have the following specific comments: a. The maximum maintenance interval of unmonitored Vented Lead-Acid (VLA) batteries should be changed from 3 calendar months to 12 calendar months. Today’s lead-calcium and lead-selenium-low antimony batteries do not have rapid water loss as compared to the legacy lead-antimony batteries. FPL’s operating experience has shown that electrolyte in today’s VLA cells do not require watering within a 12-month interval. In fact, battery manufacturers now recommend watering intervals of 2 to 3 years for some new batteries. b. The maximum maintenance interval to verify that unmonitored communications systems are functional should be changed from 3 calendar months to 12 calendar months. FPL’s operating experience has shown that power line carrier (PLC) failures are primarily due to PLC protective devices (MOVs, gas tubes & spark gaps). Automated testing such as PLC check-back schemes cannot test for failed PLC protective devices. We believe a 12 calendar month functional test is sufficient because of FPL’s operating experience. FPL’s operating experience has shown that power line carrier (PLC) failures are primarily due to PLC protective devices (MOVs, gas tubes & spark gaps). c. We believe the data retention requirements for R2 and R3 should be documentation for the two most recent maintenance activities. d. Regarding Maintenance Correctable Issue (page2) where it states: “..such that it cannot be restored to functional order during performance of the initial on-site activity”. This terminology is vague: Particularly” initial on-site activity”. Not sure what “functional order” means? The suggestion is to change to “..such that the deficiency cannot be restored to meet applicable acceptance criteria during the performance of the scheduled maintenance activity”. e. Regarding Maintenance Correctable Issue (page 2) and “R4” on Page 5, the suggestion is an entirely new “Maintenance Correctable” definition especially: “Therefore this issue requires followup corrective action”. Regarding this new definition: Why is it here? Is its purpose to ask us to do something with these issues if we discover them? Do issues identified as “Maint. Correctable” need to be tracked and reported in some manner? The referenced term “Maint. Correctable” is only used in PRC-005-2 in “R4” (page 5). The suggestion is to provide clarification. Is this “maintenance cotrrectable terminology implying that NERC PRC005-2 is opening up a new requirement for tracking and reporting resolution of “Maint Correctable” issues? The suggestion is to change to: “This issue includes any activity requiring further follow-up corrective action to restore operability outside of the applicable maint activity”. f. Regarding Countable Event (Page 3), the suggestion is an entirely new “Countable Event” definition. Why is this new term and definition “countable event” included in PRC-005-2 ? Note: In the PRC005-2 text ”countable event” is actually only referred to in PRC-005-2 in Attachment A under “Performance Based Programs” (not referred to in time based programs section). The recommendation is that the PRC-005-2 version explicitly clarify the definition of “countable event” to

clearly indicate that this term is applicable ONLY to “Performance Based Programs”. g. Regarding Countable Event (page 3), where the text says “Any failure of a component which requires repair or replacement, any condition discovered during the verification activities in Tables 1-1/1-5 which requires corrective action…..”, in the definition for “countable event” what does “corrective action” mean? PRC005-2 is unclear. Does the term “countable event” have any ties to “Maint Correctable” issues. The suggestion is to Consider changing wording from “corrective action” to “which requires > 7 days to correct” and clarify whether or not ”countable event” has any correlation to “Maint Correctable”events as discussed on page 2 and in R4? If so please provide language clarifying this correlation.
Individual
Michael Falvo
Independent Electricity System Operator
Yes
No
We commented on this before and we will comment again. The time periods for FERC-jurisdictional entities and non-jurisdictional entities should have at least a 3-month difference to allow some time for FERC approval after BoT adoption in an attempt to more or less put the effective dates of the two groups of entities in the same general time frame. The implementation plan as presented will always result in an effective date for the non-jurisdictional entities to be at least some months (the time between BoT adoption and FERC approval) earlier than their jurisdictional counterparts.
No
(1) We do not agree with the High VRF for R3 which asks for implementing the maintenance plan (and initiate corrective measures) whose development and content requirements (R1 and R2) themselves have a Medium VRF. Failure to develop a maintenance program with the attributes specified in R1, and stipulation of the maintenance intervals or performance criteria as required in R2, will render R3 not executable. Hence, we suggest that the VRF for R3 be changed to Medium. (2) The Severe VSL for R2 is improper. First, the reference to R3 is incorrect. Second, the first condition that says: “Failed to establish the entire technical justification described within R3 for the initial use of the performance-based PSMP” introduces a requirement not stipulated in R2 itself. We suggest to remove this condition. If the SDT feels strongly that the technical justification (we’re not sure what exactly it is) needs to be established for the initial use of the performance-based PSMP, then R2 should be revised to capture this requirement.
Individual
Martin Kaufman
ExxonMobil Research and Engineering
No
No
No
Yes
The SDT should provide notes that reference the sources used for developing the maximum maintenance intervals utilized in the time-based program, and provide a technical explanation as to why they have not provided a tolerance band for use with the time-based program. What is the increase in risk owned by an entity when a protective device is tested at the 6 year and 30 day mark instead of the 6 year mark?
PRC-005-2 is a highly prescriptive standard that prevents small entities from establishing a risk-based approach to protective system maintenance that is commonly used in other industry sectors and forces the small entity to utilize the time-based program. Many registered entities do not have a

population size of 60 for each type of protective device. However, they do possess historical records that can be used to calculate the mean time between failures for each equipment type that adequately reflects the service conditions in which the equipment is installed. The SDT should consider allowing registered entities to utilize historical records in their supporting documentation for defining a performance based program. Additionally, by restricting populations by manufacturer model, as referenced in PRC-005-2 Attachment A, the Standard Drafting Team is bordering on anti-competitive behavior as those entities that utilize performance-based programs may be discouraged to utilize alternative suppliers because utilization of a time-based maintenance program on the alternative supplier's equipment may present a cost-benefit analysis hurdle that the supplier of the equipment is not able to overcome. Lastly, the SDT has chosen not to provide a tolerance band for the maximum maintenance intervals it defines in its time-base program. Given that the SDT has not provided sound technical justification (i.e. a study, industry recommended practice, etc.), the SDT should reconsider its stance on providing a tolerance band on the time intervals specified in the time-based program. What is the increase in risk owned by an entity when a protective device is tested at the 6 year and 30 day mark instead of the 6 year mark?
Individual
Gary Kruempel
MidAmerican Energy Company
Yes
Yes
In the background section of the implementation plan in item two it states "...it is unrealistic for those entities to be immediately in compliance with the new intervals." Recent compliance application notices indicate that auditors are requiring entities to include proof of compliance to maintenance intervals by providing the most recent and prior maintenance dates. The implementation document could be improved by providing clarity to what is expected with regard to when an entity is expected to provide evidence of maintenance interval compliance given the quoted item above. As an example in the section the implementation plan for a 6 year interval item it states: " The entity shall be at least 30% compliant on the first day of the first calendar quarter 3 years following applicable regulatory approval.." In keeping with the previously quoted "reasonableness" criteria it would seem that 30% compliant would mean only one test action would be needed to be completed by the indicated deadline and the next one would be required no later than 6 years from that first test. It is recommended that the implementation plan document be improved to clarify this issue. In addition, it would seem appropriate to allow entities that decide to implement PRC-005-2 requirements before the standard becomes effective to count the maintenance they do before the effective date in the implementation plan schedule and in the testing interval compliance.
Yes
No
Requirement R3 of the standard discusses resolution of "identified maintenance correctable issues". M3 requires evidence of "resolution of Maintenance Correctable Issues". The definition of Maintenance Correctable Issue in the standard includes "during performance of the initial on-site activity". The "initial on-site activity" seems to imply that the corrective steps that need to be tracked are those resulting from the periodic testing that is done for compliance with the standard. It is not clear if the SDT meant to require that records be kept of any required maintenance that is done as a result of a discovered problem or failure that is not identified during the periodic testing.
Individual
Alice Ireland
Xcel Energy
Yes
Regarding the last row of Table 1-4(f): it seems very inconsistent to require a formal trending program for a manual 6 month(VRLA)/18 month (VLA) internal ohmic reading but to require no gathering and analysis of data as an alarm for a ohmic value for each cell/unit is available. If just a raw ohmic value is an adequate predictor of cell life, than why require a trending program for the

manual reading if all that is needed to determine adequacy of remaining cell life is just a simple acceptance criteria (i.e. - alarm setpoint) against which you need to compare your measured data? In theory these are very gradual and predictable changes in ohmic readings over the entire life of the battery, such that the benefit of real time knowledge of exactly when a threshold is reached via alarm is minimal rather than having to wait until the next manual reading to ascertain that the threshold limit has been reached.
Yes
Yes
Yes
1) On page 65, paragraph 4, of the “Supplemental reference and FAQ” document, it states: “… the type of test equipment used to establish the baseline must be used for any future trending of the cells internal ohmic measurements because of variances in test equipment and the type of ohmic measurement used by different manufacturer’s equipment.” While we understand the importance of creating a baseline, it is not feasible to expect the test equipment be the same as the manufacturer’s test equipment or even the same test equipment over the life of the battery. The expected life of a battery may be in excess of 20 years and it is not feasible to expect that the type of test equipment will not change during this period. 2) A FAQ to clarify in scope protection systems for variable energy resource facilities (wind, solar, etc) would be very helpful. Does paragraph 4.2.5.3 “Facilities” imply that the only protection system associated with a wind farm that is considered in scope for PRC-005-2 is that for the aggregating transformer? If other protection systems associated with a wind farm are in scope, please clarify which systems would be in scope for PRC-005-2. For example, a typical wind farm in our system might have 30-33, 1.5MVA windmills connected to one 34.5 KV collecting feeder circuit for a total of roughly 50 MVA per collecting feeder. 4 of these 50 MVA collecting feeders are tied via circuit breakers to a low side 34.5 KV bus which in turn is connected via a low side breaker to aggregating step up transformer which then connects to the BES transmission system. Obviously per paragraph 4.2.5.3, the protection system for the aggregating step up transformer is in scope. What about the protection system for the transformer low side 34.5 KV breaker – serving 200 MVA of aggregate generation? What about the protection system of each individual 34.5 KV aggregating feeder – 50 MVA of aggregate generation? What about the “protection system” for each individual 1.5 MVA windmill? An FAQ on this topic would be very helpful.
1) Regarding “Facilities” paragraph 4.2.5, we are in agreement with the elimination from scope of system connected station service transformers for those plants that are normally fed from a generator connected station service transformers. However, in the cases where a plant does not have a generator connected station service transformer such that it is normally fed from a system connected station service transformer, is it still the drafting team’s intent to exclude the protection systems for these system connected auxiliary transformers from scope even when the loss of the normal (system connected) station service transformer will result in a trip of a BES generating facility? If the end result of the trip of the primary station service transformer is a trip of a BES generating facility, it would be more consistent to include the protection system for that transformer as in scope – whether it be connected to the system or to the generator. 2) We recommend the SDT consider an interval of 12 calendar years for the component in row 3, of Table 1-5 on page 19 of the standard. The maximum maintenance interval for “Electromechanical lockout and/or tripping devices which are directly in a trip path from the protective relay to the interrupting device trip coil” should be consistent with the “Unmonitored control circuit” interval which is 12 calendar years. In order to test the lockout relays, it may be necessary to take a bus outage (due to lack of redundancy and associated stability issues with delayed clearing). Increasing the frequency of bus outages (with associated lines or transformers) will also increase the amount of time that the BES is in a less intact system configuration. Increasing the time the BES is in a less intact system configuration also increases the probability of a low frequency, high impact event occurring. Therefore, the Maximum Maintenance Interval should be 12 years for lockout relays. We believe that, as written, the testing of “each” trip coil and the proposed maintenance interval for lockout testing will result in the increased amount of time that the BES is in a less intact system configuration. We hope that the SDT will consider these changes.

Consideration of Comments on the 4th Draft of Protection System Maintenance and Testing — Project 2007-17

The Protection System Maintenance and Testing Drafting Team thanks all commenters who submitted comments on the 4th draft of the Protection System Maintenance standard, its implementation plan, and the associated reference document. The standard and associated documents were posted for a 30-day public comment period from April 13, 2011 through May 13, 2011. Stakeholders were asked to provide feedback on the standard and associated documents through a special electronic comment form. There were 55 sets of comments, including comments from more than 176 people from approximately 103 companies representing 10 of the 10 Industry Segments as shown in the table on the following pages.

All comments submitted may be reviewed in their original format on the standard's project page:

http://www.nerc.com/filez/standards/Protection_System_Maintenance_Project_2007-17.html

In addition, a successive ballot of the standard was conducted from May 3-13, 2011, and a non-binding poll of the Violation Risk Factors and Violation Severity Levels was conducted from May 3-16, 2011 and comments from the ballot and poll have been included in this report.

If you feel that your comment has been overlooked, please let us know immediately. Our goal is to give every comment serious consideration in this process! If you feel there has been an error or omission, you can contact the Vice President and Director of Standards, Herb Schrayshuen, at 609-452-8060 or at herb.schrayshuen@nerc.net. In addition, there is a NERC Reliability Standards Appeals Process.[1]

Summary Consideration of all Comments Received:

Purpose:

The SDT modified the Purpose to state, "To document and implement programs for the maintenance of all Protection Systems affecting the reliability of the Bulk Electric System (BES) so that these Protection Systems are kept in working order" in response to previous Quality Review comments.

Applicability:

Several comments were offered, suggesting that PRC-005-2 needs to be consistent with the interpretation in Project 2009-17, now implemented as PRC-005-1a, and the SDT modified Applicability 4.2.1 for better consistency with the interpretation 4.2.1 as shown below:

> 4.2.1. Protection Systems that are installed for the purpose of detecting faults on BES Elements (lines, buses, transformers, etc.).

Requirement R1:

[1] The appeals process is in the Reliability Standards Development Procedures: http://www.nerc.com/standards/newstandardsprocess.html.

Requirement R1 was modified as shown below for improved specificity, based on stakeholder comments:

> R1. Each Transmission Owner, Generator Owner, and Distribution Provider shall establish a Protection System Maintenance Program (PSMP) for its Protection Systems identified in Section 4.2.

Tables

Most commenters seemed to agree in general that the restructured tables added clarity, and some commenters offered assorted suggestions for further improvement. Minor clarifying changes were made to the Tables themselves, and additional discussion was added to the "Supplementary Reference and FAQ" to address various comments.

Implementation Plan

Some commenters noted that for entities not subject to regulatory approvals, the implementation plan should be longer so that all entities have sufficient time for implementation. The team did modify the Implementation Plan to provide for a lengthened implementation period for R1 and the less-than-1-calendar-year activities in R2 and R3 to allow entities not subject to regulatory approvals of 9 additional months following BOT approvals, and, for the remaining activities, of 12 additional months following BOT approvals, to be more consistent with the expected Regulatory Approval timelines. Additionally, all "calendar year" implementation periods were revised to "months" for additional clarity.

VLSs:

VSLs for Requirement R1

- Phased VSLs were added to address R1 Part 1.1, which was previously addressed only as a "Severe" VSL.
- A reference was added within the R1 VSL to Part 1.3.
- R1 High VSL was revised to add a reference to Table 2.

VSLs for Requirement R2

- One element of the R2 VSL was made binary (Severe), rather than "phased" (in two steps), in response to several comments.
- Many commenters pointed out an error (which was corrected by the SDT) within the VSL for R2, where the Lower and High VSLs contained identical text.

VSLs for Requirement R3

- The R3 VSLs were revised to replace "complete" with "implement and follow" for consistency with the Requirement.
- Other minor editorial changes were made throughout the VSLs in response to comments.

Supplementary Reference and FAQ

- The commenters were generally supportive of the reference document.

- Several questions regarding the enforceability of this document were posed, and the SDT explained that the document is a supporting reference and not enforceable – only standard requirements are enforceable.
- A variety of suggestions were offered regarding additional information for the document, which largely resulted in modifications to the Supplementary Reference document. One specific suggestion of note (resulting in additional discussion within the document) requested a FAQ regarding "Calendar Year".
- Several commenters posed questions regarding "grace periods" and "PSMPs established by entities that are more stringent than the requirements within the standard". No additional changes were made due to these questions. If an entity develops a PSMP that includes time intervals that are more stringent than those in the standard, the entity will be audited against the intervals in its PSMP.

Definitions:

- Several comments were offered regarding Maintenance Correctable Issues, and resulted in modifying this definition to be "…such that the deficiency cannot be corrected during the performance of the maintenance activity …"

Unresolved Minority Views:

- Many comments were offered objecting to the 3-calendar-month intervals for station dc supply and communications systems, and suggesting that a 3-calendar-month interval requires entities to schedule these activities for 2-calendar-months in order to assure compliance. The SDT did not modify the standard in response to these comments, and responded that the intervals were appropriate, and that entities should be able to assure compliance on a 3-calendar-month schedule by using program oversight. The "Supplementary Reference and FAQ" document was augmented with additional explanatory text.

- Several commenters were concerned that an entity has to be "perfect" in order to be compliant; the SDT responded that NERC Standards currently allow no provision for any degree of non-performance relative to the requirements.

- Several commenters continued to insist that "grace periods" should be allowed. The SDT continued to respond that grace periods would not be measurable.

- Several comments were offered questioning various aspects of Applicability 4.2.5.4 (generation auxiliary transformers). No changes were made in response to these comments, and responses were offered illustrating why these transformers are included.

- Many comments were offered, questioning the propriety of including distribution system Protection Systems, almost all related to UFLS/UVLS. The SDT explained that these Protection Systems are appropriate to be included for consistency with legacy standards PRC-008, PRC-011, and PRC-017, and noted that their inclusion is consistent with Section 202 of the NERC Rules of Procedure.

- Several comments were offered, objecting to the 6-calendar-year interval for lockout and auxiliary relays. The SDT declined to adopt the requested changes, and noted that these "electromechanical" devices with "moving parts" share failure mechanisms with electromechanical protective relays and that the intervals should be identical.

Index to Questions, Comments, and Responses

1. The SDT has restructured the Table for Station DC Supply, separating it into six sub-tables individually addressing the various different technologies. Do you agree that the restructured tables provide more clarity? If not, please provide specific suggestions for improvement. 18

2. The SDT has modified the Implementation Periods within the Implementation Plan. Do you agree with the changes? If not, please provide specific suggestions for improvement. 39

3. The SDT has modified the VSLs, VRFs and Time Horizons with this posting. Do you agree with the changes? If not, please provide specific suggestions for improvement. 47

4. The SDT has incorporated the FAQ document into the "Supplementary Reference" document and has provided the combined document as support for the Requirements within the standard. Do you have any specific suggestions for further improvements? 53

5. If you have any other comments on this Standard that you have not already provided in response to the prior questions, please provide them here. 64

The Industry Segments are:

1 — Transmission Owners
2 — RTOs, ISOs
3 — Load-serving Entities
4 — Transmission-dependent Utilities
5 — Electric Generators
6 — Electricity Brokers, Aggregators, and Marketers
7 — Large Electricity End Users
8 — Small Electricity End Users
9 — Federal, State, Provincial Regulatory or other Government Entities
10 — Regional Reliability Organizations, Regional Entities

Group/Individual		Commenter	Organization	Registered Ballot Body Segment									
				1	2	3	4	5	6	7	8	9	10
1.	Group	Guy Zito	Northeast Power Coordinating Council										X

	Additional Member	Additional Organization	Region	Segment Selection
1.	Alan Adamson	New York State Reliablity Council, LLC	NPCC	10
2.	Gregory Campoli	New York Independent System Operator	NPCC	2
3.	Kurtis Chong	Independent Electricity System Operator	NPCC	2
4.	Sylvain Clermont	Hydro-Quebec TransEnergie	NPCC	1
5.	Chris de Graffenried	Consolidated Edison Co. of New York, Inc.	NPCC	1
6.	Gerry Dunbar	Northeast Power Coordinating Council	NPCC	10
7.	Brian Evans-Mongeon	Utility Services	NPCC	8
8.	Mike Garton	Dominion Resources Services, Inc.	NPCC	5
9.	Brian L. Gooder	Ontario Power Generation Incorporated	NPCC	5
10.	Kathleen Goodman	ISO - New England	NPCC	2
11.	Chantel Haswell	FPL Group, Inc.	NPCC	5
12.	David Kiguel	Hydro One Networks Inc.	NPCC	1
13.	Michael R. Lombardi	Northeast Utilities	NPCC	1
14.	Randy MacDonald	New Brunswick Power Transmission	NPCC	1

Group/Individual		Commenter	Organization		Registered Ballot Body Segment									
					1	2	3	4	5	6	7	8	9	10
15.	Bruce Metruck	New York Power Authority	NPCC	6										
16.	Lee Pedowicz	Northeast Power Coordinating Council	NPCC	10										
17.	Robert Pellegrini	The United Illuminating Company	NPCC	1										
18.	Si Truc Phan	Hydro-Quebec TransEnergie	NPCC	1										
19.	Saurabh Saksena	National Grid	NPCC	1										
20.	Michael Schiavone	National Grid	NPCC	1										
21.	Wayne Sipperly	New York Power Authority	NPCC	5										
22.	Donald Weaver	New Brunswick System Operator	NPCC	1										
23.	Ben Wu	Orange and Rockland Utilities	NPCC	1										
24.	Peter Yost	Consolidated Edison Co. of New York, Inc.	NPCC	3										
2.	Group	Marie Knox	MISO Standards Collaborators			X								
	Additional Member	Additional Organization	Region	Segment Selection										
1.	Joe O'Brien	NIPSCO	RFC	6										
2.	Gary Carlson	Michigan Public Power Agency	RFC	3										
3.	Group	Mike Garton	Electric Market Policy		X		X		X	X				
	Additional Member	Additional Organization	Region	Segment Selection										
1.	Michael Gildea	Dominion Resources Services, Inc.	SERC	3										
2.	Michael Crowley	Dominion Virginia Power	SERC	1										
3.	Louis Slade	Dominion Resources Services, Inc.	RFC	6										
4.	Group	Terry L. Blackwell	Santee Cooper		X		X		X	X				
	Additional Member	Additional Organization	Region	Segment Selection										
1.	S. T. Abrams	Santee Cooper	SERC	1										
2.	Glenn Stephens	Santee Cooper	SERC	1										
3.	Rene Free	Santee Cooper	SERC	1										
4.	Kevin Bevins	Santee Cooper	SERC	1										
5.	Bridgett Coffman	Santee Cooper	SERC	1										

Group/Individual		Commenter	Organization	Registered Ballot Body Segment									
				1	2	3	4	5	6	7	8	9	10
5.	Group	Denise Koehn	Bonneville Power Administration	X		X		X	X				

	Additional Member	Additional Organization	Region	Segment Selection
1.	Dean Bender	BPA, Transmission, SPC Technical Svcs	WECC	1
2.	Jason Burt	BPA, Transmission, RAS and Data Systems	WECC	1
3.	Robert France	BPA, Transmission, PSC Technical Svcs	WECC	1
4.	Mason Bibles	BPA, Transmission, Sub Maint and HV Engineering	WECC	1
5.	Deanna Phillips	BPA, Transmission, FERC Compliance	WECC	1

6.	Group	Jonathan Hayes	SPP reliability standard development Team		X								

	Additional Member	Additional Organization	Region	Segment Selection
1.	David Reilly	Oklahoma Gas and Electric	SPP	1, 3, 5
2.	Edwin Averill	Grand Rvier Dam Authority	SPP	1, 3, 5
3.	James Hutchinson	Oklahoma Gas and Electric	SPP	1, 3, 5
4.	Mahmood Safi	Omaha Public Power District	MRO	1, 3, 5
5.	Rick Bartlett	Independence Power & Light	SPP	1, 3, 5
6.	Sean Simpson	Board of Public Utilities, City of McPherson	SPP	1, 3, 5
7.	Mark Wurm	Board of Public Utilities, City of McPherson	SPP	1, 3, 5
8.	Joe Border	Board of Public Utilities, City of McPherson	SPP	1, 3, 5
9.	Michelle Corley	CLECO	SPP	1, 3, 5, 6

7.	Group	David Thorne	Pepco Holdings Inc	X		X							

	Additional Member	Additional Organization	Region	Segment Selection
1.	Carlton Bradshaw	Atlantic Electric		1

8.	Group	Dave Davidson	Tennessee Valley Authority	X				X					

	Additional Member	Additional Organization	Region	Segment Selection
1.	David Thompson	River Operations Engineering	SERC	NA
2.	Frank Cuzzort	Nuclear Power Engineering	SERC	NA

Group/Individual		Commenter	Organization		Registered Ballot Body Segment									
					1	2	3	4	5	6	7	8	9	10
3.	Robert Brown	Nuclear Power Engineering	SERC	NA										
4.	Robert Mares	Fossil Power Engineering	SERC	NA										
5.	Paul Barlett	Transmission O&M Support	SERC	NA										
6.	Pat Caldwell	Transmission O&M Support	SERC	NA										
7.	Rusty Hardison	Transmission O&M Support	SERC	NA										
8.	Jerry Findley	Communications/SCADA	SERC	NA										
9.	Group	Jose Landeros	Imperial Irrigation District		X		X	X		X				
	Additional Member	**Additional Organization**	**Region**	**Segment Selection**										
1.	Epifanio Martinez		WECC											
2.	Fernando Gutierrez		WECC											
3.	Gerardo Landeros		WECC											
4.	Tony Allegranza		WECC											
10.	Group	Ron Sporseen	PNGC Comment Group		X		X					X		
	Additional Member	**Additional Organization**	**Region**	**Segment Selection**										
1.	Bud Tracy	Blachly-Lane Electric Cooperative	WECC	3										
2.	Dave Markham	Central Electric Cooperative	WECC	3										
3.	Roman Gillen	Consumer's Power Inc.	WECC	3										
4.	Roger Meader	Coos-Curry Electric Cooperative	WECC	3										
5.	Dave Hagen	Clearwater Electric Cooperative	WECC	3										
6.	Dave Sabala	Douglas Electric Cooperative	WECC	3										
7.	Bryan Case	Fall River Electric Cooperative	WECC	3										
8.	Rick Crinklaw	Lane Electric Cooperative	WECC	3										
9.	Michael Henry	Lincoln Electric Cooperative	WECC	3										
10.	Richard Reynolds	Lost River Electric Cooperative	WECC	3										
11.	Jon Shelby	Northern Lights Electric Cooperative	WECC	3										
12.	Ray Ellis	Okanogan Electric Cooperative	WECC	3										
13.	Aleka Scott	PNGC Power	WECC	4										

Group/Individual		Commenter	Organization		Registered Ballot Body Segment									
					1	2	3	4	5	6	7	8	9	10
14.	Heber Carpenter	Raft River Electric Cooperative	WECC	3										
15.	Ken Dizes	Salmon River Electric Cooperative	WECC	3										
16.	Steve Eldrige	Umatilla Electric Cooperative	WECC	3										
17.	Marc Farmer	West Oregon Electric Cooperative	WECC	3										
18.	Margaret Ryan	PNGC Power	WECC	8										
19.	Stuart Sloan	Consumer's Power Inc.	WECC	1										
20.	Rick Paschal	PNGC Power	WECC	3										
11.	Group	Carol Gerou	MRO's NERC Standards Review Subcommittee											X
	Additional Member	**Additional Organization**	**Region**	**Segment Selection**										
1.	Mahmood Safi	Omaha Public Utility District	MRO	1, 3, 5, 6										
2.	Chuck Lawrence	American Transmission Company	MRO	1										
3.	Tom Webb	Wisconsin Public Service Corporation	MRO	3, 4, 5, 6										
4.	Jodi Jenson	Western Area Power Administration	MRO	1, 6										
5.	Ken Goldsmith	Alliant Energy	MRO	4										
6.	Alice Ireland	Xcel Energy	MRO	1, 3, 5, 6										
7.	Dave Rudolph	Basin Electric Power Cooperative	MRO	1, 3, 5, 6										
8.	Eric Ruskamp	Lincoln Electric System	MRO	1, 3, 5, 6										
9.	Joseph Knight	Great River Energy	MRO	1, 3, 5, 6										
10.	Joe DePoorter	Madison Gas & Electric	MRO	3, 4, 5, 6										
11.	Scott Nickels	Rochester Public Utilties	MRO	4										
12.	Terry Harbour	MidAmerican Energy Company	MRO	1, 3, 5, 6										
13.	Richard Burt	Minnkota Power Cooperative, Inc.	MRO	1, 3, 5, 6										
12.	Group	Daniel Herring	The Detroit Edison Company				X	X	X					
	Additional Member	**Additional Organization**	**Region**	**Segment Selection**										
1.	David A Szulczewski	Engineering	RFC	3, 4, 5										
2.	Steven P Kerkmaz	Engineering	RFC	3, 4, 5										

Group/Individual		Commenter	Organization		Registered Ballot Body Segment									
					1	2	3	4	5	6	7	8	9	10
3.	Nicole M Syc	Engineering	RFC	3, 4, 5										
13.	Group	Albert DiCaprio	ISO/RTO Standards Review Committee			X								
	Additional Member	**Additional Organization**	**Region**	**Segment Selection**										
1.	Terry Bilke	MISO	RFC	2										
2.	Patrick Brown	PJM	RFC	2										
3.	Greg Campoli	ISO-NY	NPCC	2										
4.	Mike Falvo	IESO	NPCC	2										
5.	Matt Goldberg	ISO-NE	NPCC	2										
6.	Kathleen Goodman	ISO-NE	NPCC	2										
7.	Ben Li	IESO	NPCC	2										
8.	Steve Myers	ERCOT	ERCOT	2										
9.	Bill Phillips	MISO	RFC	2										
10.	Mark Thompson	AESO	WECC	2										
11.	Don Weaver	NBSO	NPCC	2										
12.	Mark Westendorf	MISO	RFC	2										
13.	Charles Yeung	SPP	SPP	2										
14.	Group	Sam Ciccone	FirstEnergy		X		X	X	X	X				
	Additional Member	**Additional Organization**	**Region**	**Segment Selection**										
1.	Doug Hohlbaugh	FE	RFC	1, 3, 4, 5, 6										
2.	Jim Kinney	FE	RFC	1										
3.	Brian Orians	FE	RFC	5										
4.	Ken Dresner	FE	RFC	5										
5.	Bill Duge	FE	RFC	5										
6.	Craig Boyle	FE	RFC	1										
7.	Mark Pavlick	FE	RFC	1, 3, 4, 5, 6										
8.	Lenny Lee	FE	RFC	1										
9.	J. Chmura	FE	RFC	1										

Group/Individual		Commenter	Organization	Registered Ballot Body Segment									
				1	2	3	4	5	6	7	8	9	10
10.	Rusty Loy	FE	RFC 5										
11.	Hugh Conley	FE	RFC 1										
12.	Frank Hartley	FE	RFC 1										
15.	Individual	Cynthia S. Bogorad	Transmission Access Policy Study Group	X		X	X	X	X				
16.	Individual	Brandy A. Dunn	Western Area Power Administration	X									
17.	Individual	David Youngblood	Luminant						X				
18.	Individual	Silvia Parada Mitchell	NextEra Energy	X		X		X	X				
19.	Individual	David Youngblood	Luminant					X					
20.	Individual	Jim Eckelkamp	Progress Energy	X		X		X	X				
21.	Individual	Steve Rueckert	Western Electricity Coordinating Council										X
22.	Individual	Janet Smith, Regulatory Affairs Supervisor	Arizona Public Service Company	X		X		X	X				
23.	Individual	Robert W. Kenyon	NERC - EA & I										
24.	Individual	Daniel Duff	Liberty Electric Power LLC					X					
25.	Individual	Russ Schneider	FHEC			X							
26.	Individual	Michelle D'Antuono	Ingleside Cogeneration LP					X					
27.	Individual	Beth Young	Tampa Electric Company	X									

Group/Individual		Commenter	Organization	Registered Ballot Body Segment									
				1	2	3	4	5	6	7	8	9	10
28.	Individual	Joe O'Brien	NIPSCO	X		X		X	X				
29.	Individual	Linda Jacobson	Farmington Electric Utility System			X							
30.	Individual	Greg Rowland	Duke Energy	X		X		X	X				
31.	Individual	Steve Alexanderson	Central Lincoln			X	X					X	
32.	Individual	Bob Thomas	Illinois Municipal Electric Agency				X						
33.	Individual	Joe Petaski	Manitoba Hydro	X		X		X	X				
34.	Individual	Mike Hancock	Shermco Industries										
35.	Individual	Michael Crowley	Dominion Virginia Power	X									
36.	Individual	Edward J Davis	Entergy Services	X		X		X	X				
37.	Individual	Thad Ness	American Electric Power	X		X		X	X				
38.	Individual	Jose H Escamilla	CPS Energy	X									
39.	Individual	Melissa Kurtz	US Army Corps of Engineers	X				X					
40.	Individual	Kenneth A. Goldsmith	Alliant Energy				X						
41.	Individual	Kirit Shah	Ameren	X		X		X	X				
42.	Individual	Rex Roehl	Indeck Energy Services					X					
43.	Individual	Kevin Luke	Georgia Transmission Corporation	X									

Group/Individual		Commenter	Organization	Registered Ballot Body Segment									
				1	2	3	4	5	6	7	8	9	10
44.	Individual	Andrew Z Pusztai	American Transmission Company, LLC	X									
45.	Individual	John Bee	Exelon	X		X		X					
46.	Individual	Glen Sutton	AtCO Electric ltd	X									
47.	Individual	Claudiu Cadar	GDS Associates	X									
48.	Individual	Gerry Schmitt	BGE	X									
49.	Individual	Michael Moltane	ITC	X									
50.	Individual	Bill Middaugh	Tri-State G&T	X									
51.	Individual	Don Schmit	Nebraska Public Power District	X		X		X					
52.	Individual	Michael Falvo	Independent Electricity System Operator		X								
53.	Individual	Martin Kaufman	ExxonMobil Research and Engineering	X				X		X			
54.	Individual	Gary Kruempel	MidAmerican Energy Company	X		X		X					
55.	Individual	Alice Ireland	Xcel Energy	X		X		X	X				

The following balloters submitted comments either with a comment form or with their ballot:

1	Edward P. Cox	AEP Marketing	6
2	Brock Ondayko	AEP Service Corp.	5
3	Kenneth Goldsmith	Alliant Energy Corp. Services, Inc.	4
4	Kirit S. Shah	Ameren Services	1
5	Paul B. Johnson	American Electric Power	1
6	Jason Shaver	American Transmission Company, LLC	1
7	Robert D Smith	Arizona Public Service Co.	1
8	John Bussman	Associated Electric Cooperative, Inc.	1
9	Joseph S. Stonecipher	Beaches Energy Services	1
10	Donald S. Watkins	Bonneville Power Administration	1
11	Francis J. Halpin	Bonneville Power Administration	5
12	William Mitchell Chamberlain	California Energy Commission	9
13	Steve Alexanderson	Central Lincoln PUD	3
14	Matt Culverhouse	City of Bartow, Florida	3
15	Linda R. Jacobson	City of Farmington	3
16	Gregg R Griffin	City of Green Cove Springs	3
17	Paul Morland	Colorado Springs Utilities	1
18	Christopher L de Graffenried	Consolidated Edison Co. of New York	1
19	Peter T Yost	Consolidated Edison Co. of New York	3
20	Wilket (Jack) Ng	Consolidated Edison Co. of New York	5
21	Nickesha P Carrol	Consolidated Edison Co. of New York	6
22	Brenda Powell	Constellation Energy Commodities Group	6
23	Amir Y Hammad	Constellation Power Source Generation, Inc.	5
24	David A. Lapinski	Consumers Energy	3
25	David Frank Ronk	Consumers Energy	4
26	James B Lewis	Consumers Energy	5

27	Kenneth Parker	Entegra Power Group, LLC	5
28	Joel T Plessinger	Entergy	3
29	Terri F Benoit	Entergy Services, Inc.	6
30	Robert Martinko	FirstEnergy Energy Delivery	1
31	Kevin Querry	FirstEnergy Solutions	3
32	Kenneth Dresner	FirstEnergy Solutions	5
33	Mark S Travaglianti	FirstEnergy Solutions	6
34	Dennis Minton	Florida Keys Electric Cooperative Assoc.	1
35	Frank Gaffney	Florida Municipal Power Agency	4
36	David Schumann	Florida Municipal Power Agency	5
37	Richard L. Montgomery	Florida Municipal Power Agency	6
38	Thomas E Washburn	Florida Municipal Power Pool	6
39	Luther E. Fair	Gainesville Regional Utilities	1
40	Claudiu Cadar	GDS Associates, Inc.	1
41	Guy Andrews	Georgia System Operations Corporation	4
42	Gordon Pietsch	Great River Energy	1
43	Gwen Frazier	Gulf Power	3
44	Ronald D. Schellberg	Idaho Power Company	1
45	Bob C. Thomas	Illinois Municipal Electric Agency	4
46	Rex A Roehl	Indeck Energy Services, Inc.	5
47	Michael Moltane	International Transmission Company Holdings Corp	1
48	Garry Baker	JEA	3
49	Stan T. Rzad	Keys Energy Services	1
50	Larry E Watt	Lakeland Electric	1
51	Mace Hunter	Lakeland Electric	3
52	Paul Shipps	Lakeland Electric	6
53	Daniel Duff	Liberty Electric Power LLC	5
54	Brad Jones	Luminant Energy	6
55	Mike Laney	Luminant Generation Company LLC	5
56	Joseph G. DePoorter	Madison Gas and Electric Co.	4

57	Joe D Petaski	Manitoba Hydro	1
58	Greg C. Parent	Manitoba Hydro	3
59	Mark Aikens	Manitoba Hydro	5
60	Daniel Prowse	Manitoba Hydro	6
61	Jason L. Marshall	Midwest ISO, Inc.	2
62	John S Bos	Muscatine Power & Water	3
63	Saurabh Saksena	National Grid	1
64	Arnold J. Schuff	New York Power Authority	1
65	Gerald Mannarino	New York Power Authority	5
66	Guy V. Zito	Northeast Power Coordinating Council, Inc.	10
67	William SeDoris	Northern Indiana Public Service Co.	3
68	Joseph O'Brien	Northern Indiana Public Service Co.	6
69	John Canavan	NorthWestern Energy	1
70	Douglas Hohlbaugh	Ohio Edison Company	4
71	Mark Ringhausen	Old Dominion Electric Coop.	4
72	Margaret Ryan	Pacific Northwest Generating Cooperative	8
73	Sandra L. Shaffer	PacifiCorp	5
74	Tom Bowe	PJM Interconnection, L.L.C.	2
75	John C. Collins	Platte River Power Authority	1
76	Terry L Baker	Platte River Power Authority	3
77	Carol Ballantine	Platte River Power Authority	6
78	David Thorne	Potomac Electric Power Co.	1
79	Jerzy A Slusarz	PSEG Power LLC	5
80	Henry E. LuBean	Public Utility District No. 1 of Douglas County	4
81	Steven Grega	Public Utility District No. 1 of Lewis County	5
82	Greg Lange	Public Utility District No. 2 of Grant County	3
83	Terry L. Blackwell	Santee Cooper	1
84	Lewis P Pierce	Santee Cooper	5
85	Suzanne Ritter	Santee Cooper	6
86	Pawel Krupa	Seattle City Light	1

87	Dana Wheelock	Seattle City Light	3
88	Hao Li	Seattle City Light	4
89	Michael J. Haynes	Seattle City Light	5
90	Dennis Sismaet	Seattle City Light	6
91	Horace Williamson	Southern Company	1
92	William D Shultz	Southern Company Generation	5
93	Scott M. Helyer	Tenaska, Inc.	5
94	Larry Akens	Tennessee Valley Authority	1
95	George T. Ballew	Tennessee Valley Authority	5
96	Marjorie S. Parsons	Tennessee Valley Authority	6
97	Keith V Carman	Tri-State G & T Association, Inc.	1
98	Janelle Marriott	Tri-State G & T Association, Inc.	3
99	Barry Ingold	Tri-State G & T Association, Inc.	5
100	John Tolo	Tucson Electric Power Co.	1
101	Melissa Kurtz	U.S. Army Corps of Engineers	5
102	Martin Bauer P.E.	U.S. Bureau of Reclamation	5
103	Ric Campbell	Utah Public Service Commission	9
104	Louise McCarren	Western Electricity Coordinating Council	10
105	Linda Horn	Wisconsin Electric Power Co.	5
106	James R. Keller	Wisconsin Electric Power Marketing	3
107	Anthony Jankowski	Wisconsin Energy Corp.	4
108	James A Ziebarth	Y-W Electric Association, Inc.	4
109	Kristina M. Loudermilk		8

1. The SDT has restructured the Table for Station DC Supply, separating it into six sub-tables individually addressing the various different technologies. Do you agree that the restructured tables provide more clarity? If not, please provide specific suggestions for improvement.

Summary Consideration: Most commenters seemed to agree in general that the restructured tables added clarity, and some commenters offered assorted suggestions for further improvement. Minor clarifying changes were made to the Tables themselves, and additional discussion was added to the "Supplementary Reference and FAQ" to address various comments.

A number of commenters continued to object to the "3 Calendar Month" maintenance intervals, and the SDT chose not to modify the standard. The activities involved in the 3-calendar-month maintenance intervals all relate to inspection-type activities of unmonitored battery systems and suggestions to extend the maintenance intervals to 6 or 18 months were not adopted.

Some comments suggested extending the interval to 4 months. Additional discussion (including an example) regarding this item was added to Section 7.1 of the "Supplementary Reference and FAQ". As explained in the reference, a calendar month begins on the first day of a new month following the month in which the activity was performed. Thus every "3 Calendar Months" means to add 3 months from the last time the activity was performed.

Specific changes made to the tables in response to comments:

Tables 1-1 and 1-3 – References to Table 2 were corrected.

Table 1-4(a) and Table 1-4(d) – Modified header to clarify, "Protection System Station dc supply"

Table 1-4(b) and Table 1-4(c) - Modified header and component attributes to clarify, "Protection System Station dc supply"

Table 1-4(e) - Modified header and component attributes to clarify, "Protection System Station dc supply" and replaced, "distribution breakers" with "non-BES interrupting devices".

Table 1-4(f) - Modified header to clarify, "Protection System Station dc supply", modified the seventh table entry for clarity, and added eighth table entry.

Table 1-5 – Added "Associated with Protective Functions" to header

Organization	Yes or No	Question 1 Comment
Tri-State G & T Association, Inc.	Ballot	On Table 1-2, page 11: The standard describes the following component attributes, "Any unmonitored

Organization	Yes or No	Question 1 Comment
(3) (5)	Comment – Affirmative	communications system necessary for correct operation of protective functions, and not having all the monitoring attributes of a category below." How does this apply to redundant communication systems? If the primary communications channel fails the protective relay automatically fails over to the back-up channel and continues to function properly. Are redundant communication channels excluded from this component attribute and associated interval? Also, if a relay is set to operate in a manner typical when communication is not used for protection (i.e. defaulting to step-distance functions with a loss of communication), is the defaulted operation of the relay considered "correct operation" thereby excluding the communication as necessary for its correct operation? Please clarify the term correct operation and how it applies to redundant communication systems and/or the performance of the relay in the absence of communication.
Response: Thank you for your comments. If communication-assisted protection is provided as described in the Applicability of PRC-005-2, it must be tested in accordance with the intervals and activities described in the standard. Redundant equipment and/or channels do not relieve the entity of the responsibility to maintain all equipment as required. An entity is entitled to use any monitoring present on the communications system to adjust its maintenance as established within Table 1-2, and, if sufficient component populations are present and the entity wishes to address the additional included requirements, performance-based maintenance is also available. Correct operation of the protective function means that if the communications system is part of the protection system and loss of it causes the system to fail to meet the schemes protection requirements it has failed. In the example you provide, loss of communications would result in time delay clearing depending on location of the fault. If time delay clearing will be sufficient for your system clearing time requirements, then high speed clearing is not required and the Comm. System would not need to be installed. If it is installed, you must meet the PRC-005 requirements. Redundant communications schemes are installed where high speed clearing is required to meet planning criteria. The second scheme is in place to prevent the line from being removed from service if the primary scheme must be maintained or fails. If redundant schemes are in place, both must meet the PRC-005 standard.		
Tri-State G&T		On Table 1-2, page 11: The standard describes the following component attributes, "Any unmonitored communications system necessary for correct operation of protective functions, and not having all the monitoring attributes of a category below." How does this apply to redundant communication systems? If the primary communications channel fails the protective relay automatically fails over to the back-up channel and continues to function properly. Are redundant communication channels excluded from this component attribute and associated interval? Please clarify the term correct operation and how it applies to redundant communication systems.
Response: Thank you for your comments. If communication-assisted protection is provided as described in the Applicability of PRC-005-2, it must be tested in accordance with the intervals and activities described in the standard. Redundant equipment and/or channels do not relieve the entity of the responsibility to maintain all equipment as required. An entity is entitled to use any monitoring present on the communications system to adjust its maintenance as established		

Organization	Yes or No	Question 1 Comment
within Table 1-2, and, if sufficient component populations are present and the entity wishes to address the additional included requirements, performance-based maintenance is also available. Correct operation of the protective function means that if the communications system is part of the protection system and loss of it causes the system to fail to meet the schemes protection requirements it has failed. In the example you provide, loss of communications would result in time delay clearing depending on location of the fault. If time delay clearing will be sufficient for your system clearing time requirements, then high speed clearing is not required and the Comm. System would not need to be installed. If it is installed, you must meet the PRC-005 requirements. Redundant communications schemes are installed where high speed clearing is required to meet planning criteria. The second scheme is in place to prevent the line from being removed from service if the primary scheme must be maintained or fails. If redundant schemes are in place, both must meet the PRC-005 standard.		
Consumers Energy (4)	Ballot Comment - Negative	Relating to Table 1-3, The SDT has advised that the voltage and current inputs must be checked at each individual relay. This may not be difficult if the relays are microprocessor relays (where internal metering may be used), but for the predominant population of electromechanical relays (particularly for current signals), this requirement will necessitate repeated operation of test switches and associated insertion of meters. Such activities will not only be very difficult and time consuming, but will actually be dangerous because of the dangers of accidentally opening current circuits during testing. It should be sufficient to verify the integrity of the series string of protective relays, etc during maintenance activities, as all devices within the series string will be receiving the same values.
Response: Thank you for your comments. Entities can choose how to best manage their risk. If online testing is deemed too risky, offline tests such as, but not limited to, secondary injection, CT excitation test and PT turns ratio tests can be compared to baseline data and be used in conjunction with CT and PT secondary wiring insulation verification tests to adequately “verify the current and voltage circuit inputs from the voltage and current sensing devices to the protective relays”.		
Tri-State G & T Association, Inc. (3) (5)	Ballot Comment - Affirmative	The draft standard requires the PSMP to include maintenance and testing intervals for Station DC supply associated with protective functions (including batteries, battery chargers, and non-battery-based dc supply). Does this requirement include DC systems (batteries not included in station batteries) used by communication systems necessary for the correct operation of protective functions?
Response: Thank you for your comments. No, an independent DC Supply related only to communication equipment is not considered to be “station dc supply”. The periodic functional observation and testing of the communications equipment is included, but there are no requirements for the independent dc supply.		
Wisconsin Electric Power Co. (5) Wisconsin Electric Power	Ballot Comment - Negative	(1) The maximum maintenance intervals listed in various PRC-005-2 tables are described as “calendar years” which is an undefined term. Since maintenance intervals are critical to this standard, this term should be either clearly defined or explained in the standard. For example, if a component was last tested on 6/1/2005; does that component need to be tested by 6/1/2011 or 12/31/2011 to satisfy its 6 calendar year

Organization	Yes or No	Question 1 Comment
Marketing (3) Wisconsin Energy Corp. (4)		maximum maintenance interval? 2) Clarification and/or direction is desired on the testing of protection systems that contain components owned by various entities. For example, in the instance of non-vertical integrated utilities where a distribution provider has a Protection System that directly trips a transmission owner's circuit breaker(s), how would the distribution provider verify that the trip coil is able to operate the circuit breaker? (3) Maximum testing intervals are defined. Does this imply that there are no minimum testing intervals? In other words, is the maintenance cycle reset anytime maintenance is performed? (4) Requirement R1.1.2 states that" "All batteries associated with the station dc supply component type of a Protection System shall be included in a time-based program as described in Table 1-4." Yet, in Table 1-4 under Component Attributes it refers to "…not having monitoring attributes of Table 1-4(f)." Suggest this statement be made more clear by adding "All batteries associated with the station dc supply component type of a Protection System shall be included in a time-based program as described in Table 1-4., unless the dc supply has the monitoring attributes listed in Table 1-4(f)." (5) Suggest the inspection Maximum Maintenance Interval for inspection of batteries be 4 months instead of 3 months to allow for workforce constraints that may preclude an inspection being performed within a 3 month window. Every 3 months has been found to be more than adequate to observe changing conditions that affect batteries, therefore we feel 4 months would still be sufficient. (6) In Tables 1-4 (a), (b), (c) – What is your interpretation of battery continuity? In other words, what measurements or indications would be acceptable to affirm an acceptable condition? Table 1-4(b) VRLA batteries, Maximum Maintenance Interval 18 Calendar Months, Maintenance Activities, Verify: Battery terminal connection resistance, Verify: Battery intercell or unit-to-unit connection resistance - comment: Add the following qualifier to these resistance checks: "If battery posts are not readily accessible or too small to allow a good connection, follow the manufacturer's recommendation(s)."

Response: Thank you for your comments.

1. A "calendar year" refers to the years on the Julian calendar commonly used, and should be regarded as referring to a numbered year, comprising the months of January through December. For example, 2010 is one calendar year; 2011 is another. A component, with a 6-year interval, which was last tested in 2005, would next have to be tested by the end of 2011.

2. The standard does not prescribe "how" an entity must meet the requirements, only that the requirements must be met. However, all entities listed in the Applicability are "owner entities", and the SDT believes that the owner of the component should be responsible for its maintenance. However, it may be necessary to have records relating to specific activities from the associated entity in order to demonstrate compliance to an auditor.

3. No minimum intervals are provided. To the degree that any maintenance includes all required activities, that maintenance can be recorded as addressing the

Organization	Yes or No	Question 1 Comment
standard and re-setting the interval. 4. A "time-based" program includes extended intervals for those activities that can be effectively performed by condition monitoring. However, this requirement excludes an entity from utilizing performance-based maintenance per R3 and Attachment A. 5. The activities involved in the 3-calendar-month maintenance intervals all relate to inspection-type activities. The SDT believes that an entity may schedule activities for a 3-calendar-month interval without a "grace period" if adequate program oversight is exercised, and disagrees that the intervals should be extended. The activities involved in the 3-calendar-month maintenance intervals all relate to inspection-type activities of unmonitored battery systems. See Section 7.1 of the "PRC-005-2 Protection System Maintenance Supplementary Reference & FAQ" for a discussion about "calendar month" 6. In Section 15.4 of "PRC-005-2 Protection System Maintenance Supplementary Reference & FAQ" the SDT gives its interpretation of battery continuity and lists several examples of measurements or indications that would be acceptable to affirm an acceptable condition and contains a discussion of connection resistance. Your comment concerning the inaccessibility of posts or being too small would fit more appropriately as a qualifier there than in the in the standard itself.		
Tennessee Valley Authority (1) (5) (6)	Ballot Comment - Negative	In Table 1-4(a), the requirement to perform battery cell internal ohmic measurements every 18 months for vented lead-acid batteries is excessive, and no technical justification is provided for an 18-month interval. A 3-year internal ohmic test frequency is adequate to prove battery integrity. IEEE 450 does not provide a recommended interval for internal ohmic measurements. For standard capacity testing, the recommended interval is no greater than 25% of expected battery life. Our normal battery life is 20+ years, so the recommended capacity test interval would be about 5 years. EPRI also recommends capacity testing at 5 year intervals. There is no justification for performing internal ohmic measurements every 18 months (which equals every 7.5% interval of the expected battery life). We feel the standard should set the interval for battery internal cell ohmic testing at 3 years.
Response: Thank you for your comments. The Maintenance Activity of evaluating the measured cell/unit internal ohmic values to station battery baseline is an optional activity to verify that the station battery can perform as designed. An owner who desires not to take internal ohmic measurements on a Vented Lead-Acid (VLA) battery can elect to verify that the station battery can perform as designed by conducting a performance, service, or modified performance capacity test of the entire battery bank without ever having to perform any internal ohmic measurement on the battery. The maximum maintenance interval for performing this capacity test on a VLA battery bank is 6 Calendar Years. In section 15.4 of "PRC-005-2 Protection System Maintenance Supplementary Reference & FAQ" - that was posted for review with PRC-005-2 - the SDT answered several Frequently Asked Questions which explain why the 18 month Maximum Maintenance Interval is justified rather than the 3 year frequency that is assumed by some to be adequate.		
Great River Energy (1)	Ballot Comment - Affirmative	1. Table 1-4(b) VRLA Batteries---both" 6 Calendar Months" in the table should be changed to 12 months. This would avoid being in violation if we miss a bank during a "6 month maintenance cycle" 2. Table 1-4(c) Nickel-Cadmium Batteries under the Maintenance Activities column for the 6 Calendar Years--- This maintenance activity should be optional if 18 Calendar Month Activities are completed. Or increase load test to 10 years.

Organization	Yes or No	Question 1 Comment
Response: Thank you for your comments. 1. In the IEEE recommended Practice for Maintenance, Testing and Replacement of VRLA batteries (IEEE SDT 1188) a quarterly inspection should include "Cell/unit internal ohmic values." Based on this recommendation the SDT believes that extending the Maximum Maintenance Interval of 6 Calendar Months in Table 1-4(b) to 12 months as suggested would be too excessive. The 6 Calendar Months for this maintenance activity will allow an entity to avoid being in violation if they miss a bank by a few days during the quarterly maintenance cycle. 2. In section 15.4 of "PRC-005-2 Protection System Maintenance Supplementary Reference & FAQ" the SDT answered a Frequently Asked Question explaining why the 6 Calendar Year maintenance activity cannot be optional if the 18 Calendar Month Activity of Table 1-4(c) is performed. The SDT also in the Supplemental Reference & FAQ document justifies why the 6 Calendar Year Maximum Maintenance interval for performing the Maintenance Activity in Table 1-4(c) can not be extended to 10 years as suggested.		
AtCO Electric ltd		Table 1-4: ATCO Electric has a number of remote substations that are difficult to access. 1. The requirement for a 3 calendar month inspection for electrolyte level is too frequent. The requirement would become achievable if electrolyte level inspections were moved to the 18 calendar months category, or if the 3 calendar months frequency were increased to 8 calendar months. 2. Table 1-4(b): for the same reasons, the requirement of a 6 calendar month inspection of individual battery cell/unit internal ohmic values is too frequent. The requirement would become achievable if battery cell/unit internal ohmic value inspections were moved to the 18 calendar months category, or if the 6 calendar months frequency were increased to 14 calendar months. 3. Table 1-4(c): the requirement of a 6 calendar year performance service or modified performance capacity test should be removed. From our experience, there is no benefit in doing battery load tests. Instead, we apply verification of battery intercell resistance as a more efficient method of monitoring battery condition, which provides an 8 to 14 month lead time to replace a battery unit/cell before it goes dead.
Response: Thank you for your comments. 1. The activities involved in the 3-calendar-month maintenance intervals all relate to inspection-type activities of unmonitored battery systems. The SDT believes that an entity may schedule activities for a 3-calendar-month interval. If adequate program oversight is exercised, and disagrees that the intervals should be extended. See Section 7.1 of the "PRC-005-2 Protection System Maintenance Supplementary Reference & FAQ" for a discussion about "calendar month". 2. In the IEEE recommended Practice for Maintenance, Testing and Replacement of VRLA batteries (IEEE SDT 1188) a quarterly inspection should include "Cell/unit internal ohmic values." Based on this recommendation the SDT believes that extending the Maximum Maintenance Interval of 6 Calendar Months in Table 1-4(b) to the 18 calendar months category as suggested would be excessive and the SDT notes that this verification may be possible via monitoring methods."(See Table 1-4(f), component attribute row "Any lead acid battery based …"). The 6 Calendar Months for this maintenance activity will allow an entity to avoid being in violation if they miss a bank by a few days during the quarterly maintenance cycle.		

Organization	Yes or No	Question 1 Comment
3. In section 15.4 of "PRC-005-2 Protection System Maintenance Supplementary Reference & FAQ" the SDT answered a Frequently Asked Question explaining why the 6 Calendar Year maintenance activity cannot be optional if the 18 Calendar Month Activity of Table 1-4(c) is performed. The SDT also in the Supplemental Reference & FAQ document justifies why the 6 Calendar Year Maximum Maintenance interval for performing the Maintenance Activity in Table 1-4(c) can not be removed as suggested.		
Kristina M. Loudermilk (8)	Ballot Comment - Affirmative	1) In Table 1-4(b) under the Component Attributes, the sentence begins with Station dc supply; while the other 1-4 tables begin with Protection System Station dc. I propose to make it consistent with the other tables. 2) Table 1-4(e) mentions Maximum intervals and references another table. Is there an easier way in the Standard to send the same information without having them flip pages? As another example in every Component Attribute in Table 1-4(f) we mention (See Table 2). Could it be possible to make that a note, instead of placing it under each attribute? It seems overwhelming when looking at these and for each one that is read, flip over to Table 2. I feel like some of these references give the feel of a scavenger hunt. I am not sure if anything can be done, but thought I would mention it.
Response: Thank you for your comments. 1.The Tables have been modified to use "Protection System Station dc supply" 2. In this regard, the SDT has tried several methods of presentation for this information. Of all methods reviewed, including the one you suggest, the SDT has determined that the method currently represented in the Tables represents the best compromise.		
Consumers Energy (4)	Ballot Comment - Negative	Relative to the 18-month activity to measure battery terminal connection resistance in Table 1-4, measuring the battery terminal connection resistance for all terminals of the battery is an involved process that may force the battery (and thus the system) out-of-service, or alternatively the use of a temporary battery, for the duration of the activity. We suggest that a 6-year interval for this involved and invasive activity is appropriate and adequate. We also suggest that it should alternatively be sufficient to instead re-torque all battery terminal connections at the same interval.
Response: Thank you for your comments. In IEEE Standards 450, 1188, and 1106 for vented lead-acid (VLA), valve-regulated lead-acid (VRLA) and nickel-cadmium (NiCd) batteries respectively state that a "yearly inspection" should include "Cell-to-cell and terminal connection resistance", "Cell-to-cell and detail resistance of entire battery", and "Condition and resistance of cable connections." Based on these IEEE recommendations the SDT believes that the Maximum Maintenance Interval of 18 Calendar Months for this Maintenance activity will allow an entity to avoid being in violation if they miss a bank by a few weeks during the yearly maintenance cycle. In section 15.4 of "PRC-005-2 Protection System Maintenance Supplementary Reference & FAQ" - that was posted for review with PRC-005-2 - the SDT explains what hazards can result from high connection resistance. Also in the Supplementary Reference the SDT references where in the IEEE Standards entities can find excellent information and examples of performing this non-intrusive Maintenance Activity. The SDT respectively disagrees with the premise that the activity to		

Organization	Yes or No	Question 1 Comment
measure battery terminal connection resistance in Table 1-4 is "an involved process that may force the battery (and thus the system) out-of-service, or alternatively the use of a temporary battery, for the duration of the activity." Members of the SDT are familiar with numerous Transmission Owners, Generator Owners and Distribution Providers in NERC who yearly perform this benign maintenance activity on their battery systems while the Protection Systems that the station batteries support are in service.		
Ameren Services (1)	Ballot Comment - Affirmative	Clarify p17 Table 1-4(e) interval meaning. We think this means we need to verify the Station dc supply voltage on 12 calendar year interval if unmonitored, or no periodic maintenance if monitored as stated.
Response: Thank you for your comments. You are correct in your interpretation for Protection System dc supply used only for distribution breakers that are associated with UFLS, UVLS, or SPS, as stated in Table 1-4(e).		
Old Dominion Electric Coop. (4)	Ballot Comment - Affirmative	ODEC believes the standard is very close to being ready for approval. 1. In the Attachment A for the battery testing, you exempt the UFLS and UVLS equipment in tables and then include SPS batteries in the table with UFLS and UVLS. Either SPS should be associated with UFLS and UVLS and you need to add it to the previous tables or fix table 1(f). 2. Also, consider going to 4 calendar months instead of 3 calendar months for the battery maintenance requirements.
Response: Thank you for your comments. 1. Special Protection Systems are often a far more complex system which may comprise a combination of "transmission", distribution, and generation components, and are often installed to prevent serious system problems. Therefore, the requirements for SPS equipment maintenance align with that for other generic Protection Systems. It is also notable that the legacy PRC-017-1 includes batteries within the list of components to be addressed. However, if the breaker is a distribution breaker that is associated with SPS but is not otherwise associated with generic Protection Systems, the extended interval in Table 1.4(e) applies. 2. The activities involved in the 3-calendar-month maintenance intervals all relate to inspection-type activities of unmonitored battery systems. The SDT believes that an entity may schedule activities for a 3-calendar-month interval without a "grace period" if adequate program oversight is exercised, and disagrees that the intervals should be extended. See Section 7.1 of the "PRC-005-2 Protection System Maintenance Supplementary Reference & FAQ" for a discussion about "calendar month."		
Associated Electric Cooperative, Inc. (1)	Ballot Comment - Negative	AECI appreciates the effort by the drafting team. However, the 90 day inspections for batteries and communications circuits should be extended to 120 days to allow for a 30 grace period. Schedules would be set for every 90 days as what is required in this revision.
Response: Thank you for your comments. The activities involved in the 3-calendar-month maintenance intervals all relate to inspection-type activities of		

Organization	Yes or No	Question 1 Comment
unmonitored components. The SDT believes that an entity may schedule activities for a 3-calendar-month interval without a "grace period" if adequate program oversight is exercised, and disagrees that the intervals should be extended. See Section 7.1 of the "PRC-005-2 Protection System Maintenance Supplementary Reference & FAQ" for a discussion about "calendar month"		
Manitoba Hydro (1) (3) (5) (6)	Ballot Comment - Negative	1. Battery Check Interval Manitoba Hydro maintains our position that the 3 month battery check interval should be extended to 6 months. The 3 month interval is too frequent based on our experience and while IEEE SDT 450 (which seems to be the basis for table 1-4) does recommend intervals, it also states that users should evaluate these recommendations against their own operating experience. With the 3 month battery check frequency and no allowance for a grace period, there may be a negative impact on reliability caused by diverting resources away from projects that are critical to reliability to meet this maintenance interval. 2. Conductance Measurements Conductance measurement should be listed in Table 1-4 as an acceptable measurement method.
Response: Thank you for your comments. 1. The activities involved in the 3-calendar-month maintenance intervals all relate to inspection-type activities of unmonitored battery systems. The SDT believes that an entity may schedule activities for a 3-calendar-month interval if adequate program oversight is exercised, and disagrees that the intervals should be extended. See Section 7.1 of the "PRC-005-2 Protection System Maintenance Supplementary Reference & FAQ" for a discussion about "calendar month". 2. In section 15.4 of "PRC-005-2 Protection System Maintenance Supplementary Reference & FAQ" the SDT answered a Frequently Asked Question explaining what cell/unit internal ohmic measurements are. Conductance by definition is an ohmic measurement and although not spelled out in the standard is listed in Table 1-4 because it is an ohmic measurement.		
Georgia Transmission Corporation	No	We need clarification on the UFLS or UVLS system Station DC Supply test. We trip the high side device (non-BES asset) for each of our distribution stations UFLS or UVLS schemes, not the individual distribution breakers. It is hard to distinguish what maintenance interval and maintenance activities we should engage for Station DC Supply test. Since the device is not a distribution breaker as mentioned in the Table 1-4 (a-f) we would be conservative and choose to perform maintenance at all our distribution stations with UFLS or UVLS schemes as per Table 1-4(a). Reading the statements in the Supplementary Reference and FAQ, we notice our devices perform similar functions as the distribution breakers. Reference pg 60 of Supp. Ref. and FAQ paragraph 4. Since tripping the high side device of a distribution transformer still constitutes a distributed system would our system meat the exclusion criteria although it is not a distribution breaker, would this meet the same requirements and exempt the station from Table 1-4(a) and require only maintenance for DC systems as per Table 1-4(e)? Please clarify. We recommend changing the term distribution breaker to distribution asset interruption device or non-BES equipment interruption device.

Organization	Yes or No	Question 1 Comment
Response: Thank you for your comments. Table 1-4 (e) has been modified in consideration of your comment to improve clarity ("non-BES interrupting devices "). If the cited distribution transformer is not a BES element, the Protection Systems for that distribution transformer are not included per the Applicability (4.2.1) as modified.		
PNGC Comment Group	No	We agree the changes to the tables have added clarity, but disagree with the maintenance intervals for DC supply. Comments: PNGC's comment group views the Maximum Maintenance Interval for station DC Power Supply (Table - 14a/b/c/d) to be unnecessarily onerous and restrictive to many smaller-rural entities, in the west and probably throughout the US, and this prevents us from being able to support PRC-005-2 as written. We make these comments with the understanding that others have made similar comments in the past but we feel strongly that this is an important issue worthy of further review by the SDT. We believe a quarterly inspection schedule can be met while at the same time allowing entities the flexibility they need. IEEE 1188-2005 suggests a quarterly inspection schedule for lead acid batteries and we believe the standard interval for verifying and inspecting dc supply should be 3 months with a maximum interval of 6 months. This meets the quarterly threshold and gives some flexibility to account for unusual conditions. There are substations in Pacific Northwest rural areas that can be inaccessible during long periods of time during the winter, potentially exposing an entity to sanction if weather conditions prevent access to equipment for an extended period of time. Additionally, due to a smaller workforces and greater distances between equipment subject to PRC-005, small-rural entities face obstacles that large entities may not have. The three month maximum interval assumes ideal conditions and resource access and is not realistic. We thank the SDT for considering our comments.
Response: Thank you for your comments. The activities involved in the 3-calendar-month maintenance intervals all relate to inspection-type activities of unmonitored battery systems. The SDT believes that an entity may schedule activities for a 3-calendar-month interval without a "grace period" if adequate program oversight is exercised, and disagrees that the intervals should be extended.		
Arizona Public Service Company	No	Although considerable clarity was achieved in the structuring of the table for the different types of technologies associated with the DC supply, there is issue on the maximum allowable intervals. The standard remains too prescriptive in the intervals and maintenance activities. As an example it is believed the intent of the interval for verifying voltages and inspecting electrolyte levels and unintentional grounds level would be every 3 months. However, for the entity to ensure compliance and not incur a violation it would have to have a shorter interval, probably every 2 months just to ensure compliance and not incur a violation. The 3 month interval is in question based on programs that have been in service for many years where four months have been proven as reliable for operation, an even shorter period than 3 or 4 months is not only a burden but an unnecessary expense without a benefit of increase reliability of the Bulk Electric System.

Organization	Yes or No	Question 1 Comment
Response: Thank you for your comments. The activities involved in the 3-calendar-month maintenance intervals all relate to inspection-type activities of unmonitored battery systems. The SDT believes that an entity may schedule activities for a 3-calendar-month interval without a "grace period" if adequate program oversight is exercised, and disagrees that the intervals should be extended. See Section 7.1 of the "PRC-005-2 Protection System Maintenance Supplementary Reference & FAQ" for a discussion about "calendar month".		
Southern Company Generation (5)	Ballot Comment - Affirmative	The restructured Table for Station DC supply does clarify what is being required for each type of dc system, yet the Station DC Supply requirements, however, are excessively prescriptive in comparison to the other Protection System component types.
Response: Thank you for your comments. The SDT recognizes that Table 1-4 with its tables a through f is considerably larger than any of the tables for the other four Protection System components. However the SDT does not agree that the maintenance activities of Tables 1-4 (a –f) for the station dc supply are "excessively prescriptive." As pointed out in Section 15.4 of "PRC-005-2 Protection System Maintenance Supplementary Reference & FAQ" the station battery which is part of the station dc supply is unique from any other Protection System component in that it is a perishable product which requires several prescribed maintenance activities to monitor and maintain its ability to perform as designed for its life cycle.		
Indeck Energy Services	No	The tables are limited to a few battery technologies and will be out of date in short order with the many types of advanced batteries already on the market. The testing requirements should be performance based as opposed to prescriptive.
Response: Thank you for your comments. While the SDT agrees that there are a few advanced batteries and new station dc supplies which have non battery based energy storage devices in them on the market, the SDT disagrees that the testing requirements for batteries used in station dc supplies should be performance based as opposed to prescriptive. FERC Order 693 and the approved SAR assign the SDT to develop a standard with maximum allowable intervals and minimum maintenance activities. Please note that the Standard specifically addresses requirements for non-battery based energy storage devices within Table 1-4(d). According to the NERC Reliability Standard Development Process, NERC Reliability Standards must be reviewed at least once every five years, and any changes related to new technologies can be addressed within that process.		
Tampa Electric Company	No	If during a UF operation there were ever any breakers that did not trip properly, there may be enough that do trip to return things to balance. There is more room for error with UFLS than with BES. The standard does make some allowance for differences between UFLS equipment and BES equipment. For example the DC source testing requirement for UFLS is to just test the battery voltage when the control circuit is tested. It is not necessary that the breaker be tripped for UFLS testing every six years as is the case for BES. However, every 12 years all unmonitored control circuitry must be tested, which may include tripping the breaker.
Response: Thank you for your comments. Table 1-5 does not require tripping of the breaker for UFLS/UVLS.		
Tri-State G & T Association, Inc.	Ballot	On Page 19, Table 1-5, the standard requires that electromechanical lockout control circuits be maintained

Organization	Yes or No	Question 1 Comment
(3) (5)	Comment - Affirmative	every 6 years and protective function unmonitored control circuits be maintained every 12 years. Why is there inconsistency in the interval between the electromechanical lockout and protective function control circuits?
Response: Thank you for your comments. The circuit itself is 12-years, but the interval for electromechanical devices such as auxiliary or lockout relays remains at 6 years, as these devices contain “moving parts” which must be periodically exercised to remain reliable.		
Constellation Energy Commodities Group (6)	Ballot Comment - Negative	As with previous revisions of this standard, the maintenance intervals and activities described in Table 1-1 through Table 1-5 are too prescriptive.
Constellation Power Source Generation, Inc. (5)	Ballot Comment - Negative	CPG believes, as with previous revisions of this standard, that the maintenance intervals and activities described in Table 1-1 through Table 1-5 are too prescriptive.
Response: Thank you for your comments. The SDT is not prescribing or suggesting what methods an entity employs within their program. The intervals remain as prescribed within the standard and are designed to be clear and effective to support reliability of the BES.		
Alliant Energy Corp. Services, Inc. (4)	Ballot Comment - Negative	Table 1-5 (Component Type – Control Circuitry) Item 4 – “Unmonitored control circuitry associated with protective functions” require a 12 calendar year maximum maintenance interval. We believe UFLS and UVLS control circuitry should be exempted from this requirement. It would take multiple failures to have any impact, and the impact on the BES would be minimal.
Response: Thank you for your comments. The SDT disagrees; however, the requirements related to interrupting devices used only for UFLS/UVLS are less detailed than those for other Protection Systems because of the reason cited in your comment.		
Consumers Energy (4)	Ballot Comment - Negative	Relative to Table 1-5, the activities will likely require that system components be removed from service to complete those activities. In the case of system elements that do not have redundant protection systems (such as those related to lower-voltage systems within the BES), it may not be possible to do so with outaging customers for the duration of the maintenance activity. The standard must exempt these components from the activities of Table 1-5 if the activity would result in deenergizing customers.
Response: Thank you for your comments. The intervals and activities specified are believed by the SDT to be technically effective. It is left to the entity to determine how to align these requirements with requirements of other regulations and with operational concerns. Entities should be able to complete the activities within the shorter intervals without outages.		
American Transmission	Ballot	1. ATC recognizes the substantial efforts and improvements to PRC-005-2 that have been made and

Organization	Yes or No	Question 1 Comment
Company, LLC (1)	Comment - Negative	appreciate the dedicated work of the SDT. ATC appreciates the removal of Requirement R1.5 and R4 and other clarifications from draft 3. 2. ATC's remaining concerns to PRC-005-2 are with the definition and timelines established in Table 1-5. ATC is recommending a negative ballot since, as written, the testing of "each" trip coil and the proposed maintenance interval for lockout testing will result in the increased amount of time that the BES is in a less intact system configuration. Note: Additional Comments to overall Standard also submitted.
Response: Thank you for your comments. 1. Thank you for your support. 2. The lockout relays and trip coils contain "moving parts" which must be periodically exercised to remain reliable. Operational results, if desired by an entity, MAY be used to meet maintenance requirements to the degree that they verify, etc, the relevant performance. Whether their use is effective for a specific entity is left to the entity to determine.		
Wisconsin Electric Power Co. (5) Wisconsin Electric Power Marketing (3) Wisconsin Energy Corp. (4)	Ballot Comment - Negative	Clarification is required in Table 1-5 as to what trip and control paths should be tested. Specifically, should non-protection paths, such as local control switches, that are not part of the Protection System, but operate Protection System Component, be tested? In Table 1-5, the maintenance activity for unmonitored control circuitry associated with protective functions is to "verify all paths of the control and trip circuits". We recommend that only the protection system paths of the control and trip circuits require verification by PRC-005-2.
Response: Thank you for your comments. The SDT believes that Protection Systems that protect BES elements should be included. This position is consistent with the currently-approved PRC-005-1 and consistent with the SAR for Project 2007-17. The header section of Table 1-5 has been modified to clarify that only the control circuitry associated with protective functions is being addressed.		
Kristina M. Loudermilk (8)	Ballot Comment - Affirmative	In table 1-5 is it necessary to mention the second and last item in the table. If there is nothing to do, then why have it as an attribute making it mandatory to keep track of, well, nothing. If those items do need to stay, then could we reorganize the table so where it is in ascending order from Maximum maintenance intervals, like the other tables?
Response: Thank you for your comments. The SDT believes that inclusion of these two items add clarity. The Table entry for trip coils associated only with UVLS/UVLS has been left in the original position to relate it directly to the companion activities for other applications.		

Organization	Yes or No	Question 1 Comment
Nebraska Public Power District	No	The restructured tables are indeed an improvement; however the tables still need some work for clarity: 1. Table 1-5: Unmonitored control circuitry has a maintenance activity of "Verify all paths of the control and trip circuits." The wording of "control and trip circuits" leads to circuit verification of more than just trip circuits. In fact multiple circuits would have to verified, such as station house load transfer schemes. Providing documentation to an auditor to prove all paths have been tested will be difficult and is considered excessive. The paperwork required to prove compliance is extremely excessive for this requirement and doesn't provide a benefit to reliability. 2. Table 1-5: Table 1-5 requires trip checking every six calendar years for trip coils and electromechanical lockout and/or tripping auxiliary devices. Every six years is excessive, when suitable monitoring is used. We recommend verification of these components be completed at the same frequency as the associated relay testing when monitoring is used. For electromechanical, no more than every 6 calendar years, for microprocessor, no more than 12 calendar years.
Response: Thank you for your comments. 1. The header section of Table 1-5 has been revised to clarify that it applies to "Control Circuitry Associated with Protective Functions", and the SDT believes that this revision addresses your concerns. 2. The electromechanical devices such as auxiliary or lockout relays remains at 6 years, as these devices contain "moving parts" which must be periodically exercised to remain reliable.		
Consolidated Edison Co. of New York (1) (3) (5)	Ballot Comment - Affirmative	1. We recommend increasing the Table 2 reporting window from 24-hours to 72-hours for facilities not continuously manned in order to accommodate discovery and reporting of failed alarms at these facilities which may occur over a long (3-day) holiday weekend.
Consolidated Edison Co. of New York (6)	Ballot Comment - Affirmative	1. We recommend increasing the Table 2 reporting window from 24-hours to 72-hours for facilities not continuously manned in order to accommodate discovery and reporting of failed alarms at these facilities which may occur over a long (3-day) holiday weekend. 2. We recommend that the drafting team recognize that a "fail safe" or "self-reporting" alarm design serves as an acceptable alternative to periodic testing. This "fail safe" or "self-reporting" alarm design is equivalent to continuous testing the alarm. When the alarm circuit fails the alarm is set to "alarm on" and automatically notifies the control center, initiating a corrective action.
Response: Thank you for your comments.		

Organization	Yes or No	Question 1 Comment
1. The SDT believes that the monitoring and reporting will be generally done by automatic reporting methods such as SCADA and previously removed a reference to "automatic reporting" specifically to address those cases where the facility is manned. 2. The application discussed seems to the SDT to be an effective method of "monitoring the monitoring circuit". (See Table 2, last row with heading "Alarm Path with monitoring.")		
Nebraska Public Power District	No	1. Table 2: The interrelationship between Tables 1-1 through 1-5 and Table 2 is ambiguous. Tables 1-1 through 1-5 "component attributes" columns references Table 2 in many cases as the criteria for maximum interval. However, each table entry has a maximum maintenance interval listed as well. There are a few instances where the "trump" interval is not clear. Table 1-5 is a good example. 2. Table 2 states that monitored devices (1-1 through 1-5) not having monitored alarm paths shall be tested every 12 years. However, Table 1-5 states that DC circuits with monitored continuity shall have no periodic maintenance. We suspect that Table 2 attributes needs further clarification to eliminate the confusion, both Table 2 attributes at first glance appear to say the same thing. However, after study it appears to address "detection" monitoring versus continuous (control center type) monitoring. We believe further distinguishing clarifications are needed to make it evident and clear.
Response: Thank you for your comments. 1. The SDT believes that the activities and intervals, as they relate to whatever monitoring attributes are present, are clear. Table 2 is specifically labeled to address whatever maintenance is necessary to the monitoring and alarming equipment itself. The references to Table 2 have been corrected where necessary. 2. Table 1 is related to the component itself, and Table 2 relates to maintenance of the monitoring and alarming if relevant. If the monitoring specified is present, no periodic maintenance of the control circuitry itself is needed. However, as indicated in Table 2, maintenance (or monitoring) is required to assure that the monitoring on the control circuitry is operational.		
ExxonMobil Research and Engineering	No	
Ameren	Yes	Please carry the grid across in Table 1-4(f) to show the Maintenance Activities that go with the Component Attribute.
Response: Thank you for your comments. The grid in Table 1-4(f) is drawn as the SDT intended, to show "No periodic maintenance specified" for all table entries. The activity listed is the activity that is being accomplished by the monitoring mechanism.		
Tennessee Valley Authority	Yes	However, The requirement to perform battery cell internal ohmic measurements every 18 months for vented lead-acid batteries is excessive, and no technical justification is provided for an 18-month interval. A 3-year

Organization	Yes or No	Question 1 Comment
		internal ohmic test frequency is adequate to prove battery integrity. EEE 450 does not provide a recommended interval for internal ohmic measurements. For standard capacity testing, the recommended interval is no greater than 25% of expected battery life. Our normal battery life is 20+ years, so the recommended capacity test interval would be about 5 years. EPRI also recommends capacity testing at 5 year intervals. There is no justification for performing internal ohmic measurements every 18 months (which equals every 7.5% interval of the expected battery life). Recommendation: Set the interval for battery internal cell ohmic testing at 3 years.
Response: Thank you for your comments. The Maintenance Activity of evaluating the measured cell/unit internal ohmic values to station battery baseline is an optional activity to verify that the station battery can perform as designed. An owner who desires not to take internal ohmic measurements on a Vented Lead-Acid (VLA) battery can elect to verify that the station battery can perform as designed by conducting a performance, service, or modified performance capacity test of the entire battery bank without ever having to perform any internal ohmic measurement on the battery. The maximum maintenance interval for performing this capacity test on a VLA battery bank is 6 Calendar Years. In section 15.4 of "PRC-005-2 Protection System Maintenance Supplementary Reference & FAQ" - that was posted for review with PRC-005-2 - the SDT answered several Frequently Asked Questions which explain why the 18 month Maximum Maintenance Interval is justified rather than the 3 year frequency that is assumed by some to be adequate.		
Exelon	Yes	What kind of component we are talking about in table 1.4(d) "Station DC Supply using Non Battery Based Energy Storage" for switchyard in nuclear plants?
Response: Thank you for your comments. An example of a "station dc supply" component of this nature would be fuel cells. The SDT is aware that some entities are beginning to apply non-battery-based dc supplies, but we are unaware whether anyone is using these in switchyards for nuclear plants.		
Xcel Energy	Yes	Regarding the last row of Table 1-4(f): it seems very inconsistent to require a formal trending program for a manual 6 month (VRLA)/18 month (VLA) internal ohmic reading but to require no gathering and analysis of data as an alarm for a ohmic value for each cell/unit is available. If just a raw ohmic value is an adequate predictor of cell life, than why require a trending program for the manual reading if all that is needed to determine adequacy of remaining cell life is just a simple acceptance criteria (i.e. - alarm set point) against which you need to compare your measured data? In theory these are very gradual and predictable changes in ohmic readings over the entire life of the battery, such that the benefit of real time knowledge of exactly when a threshold is reached via alarm is minimal rather than having to wait until the next manual reading to ascertain that the threshold limit has been reached.
Response: Thank you for your comments. Your comment concerning the last row of Table 1-4(f) being inconsistent with the two distinct maintenance activities for internal ohmic value measurement found in the unmonitored station dc supply tables 1-4(a) and 1-4(b) was very incisive. As pointed out in section 15.4 of "PRC-005-2 Protection System Maintenance Supplementary Reference & FAQ" the SDT recognized that there are two maintenance activities in Table 1-4(b) which appear to be the same, but require a different method of interpretation to complete the required maintenance activity. The Drafting Team has considered your comment in light of its own discussion in the Supplementary Reference & FAQ document and has divided the last row of Table 1-4(f) into two rows to reflect the		

Organization	Yes or No	Question 1 Comment
two distinct maintenance activities required in the unmonitored tables (inspection of the condition of individual VRLA cell/units, and evaluating internal ohmic measurements to a baseline to verify the station battery can perform as designed).		
Duke Energy	Yes	We believe the table could be improved further to aid compliance by adding a footnote to the term "baseline" in the sub-tables 1-4(a), 1-4(b) and 1-4(f). The following proposed footnote text is taken from page 65 of the Supplementary and FAQ Reference Document: "Often for older VLRA batteries the owners of the station batteries have not established a baseline at installation. Also for owners of VLA batteries who want to establish a maintenance activity which requires trending of measured ohmic values to a baseline, there was typically no baseline established at installation of the station battery to trend to. To resolve the problem of the unavailability of baseline internal ohmic measurements for the individual cell/unit of a station battery, all manufacturers of internal ohmic measurement devices have established libraries of baseline values for VRLA and VLA batteries using their testing device. Also several of the battery manufacturers have libraries of baselines for their products that can be used to trend to."
Response: Thank you for your comments. The addition that you suggest is properly considered application guidance; the SDT has been advised that such information is not to be included within the standard, and that it is appropriately included in separate reference materials.		
Ingleside Cogeneration LP	Yes	1. Ingleside Cogeneration, LP, continues to believe that the six year requirement to verify channel performance on associated communications equipment will prove to be more detrimental than beneficial on older relays. Clearly newer technology relays which provide read-outs of signal level or data-error rates will easily verified, but the tools which measure power levels and error rates on non-monitored communication links are far more intrusive. After the technician uncouples and re-attaches a fiber optic connection, the communications channel may be left in worse shape after verification than it was prior to the start of the test. 2. However, we have found that the remainder of the items in the Tables are logically organized and correspond effectively with the five components of a Protection System. The maintenance activities and intervals are technically solid and reasonable. In our opinion, the benefits to proceed outweigh our one concern with the validation of communications channel performance.
Response: Thank you for your comments. 1. We agree that it is not good practice to disturb fiber connections as you indicate. Draft 4 does not require that. The Entity must perform the activities in the "Maintenance Activities" column. The SDT does not interpret this as taking anything apart. 2. Thank you.		
Manitoba Hydro	Yes	The restructured tables are an improvement, but we suggest that conductance (siemens) should be listed as

Organization	Yes or No	Question 1 Comment
		an acceptable measurement in addition to the resistance measurements already included in the tables.
Response: Thank you for your comments. In section 15.4 of "PRC-005-2 Protection System Maintenance Supplementary Reference & FAQ" the SDT answered a Frequently Asked Question explaining what cell/unit internal ohmic measurements are. Conductance is an ohmic measurement and although not spelled out in the standard is listed in Table 1-4 because it is an ohmic measurement.		
NIPSCO	Yes	Sub-tables are good. A related question: Some devices such as reclosers and circuit breakers may include batteries within the device itself. Does Table 1-4 apply to such batteries and DC supply? Recloser batteries do not provide access to intercell connections.
Response: Thank you for your comments. In most instances Table 1-4 does not apply to recloser batteries or batteries within the device because they are not generally used to provide dc power to Protection Systems designed to provide protection for BES elements. However, these types of devices with self contained batteries may be used at the distribution level to provide Protection Systems used for underfrequency and undervoltage load-shedding. Maintenance activities and maximum maintenance intervals for such batteries are found in Table 1-4(e) of the Standard.		
MISO Standards Collaborators American Transmission Company, LLC	Yes	1. Yes, however, in the "Supplemental reference and FAQ" document on page 65 there are two areas of concern. Page 65, paragraph 4:" the type of test equipment used to establish the baseline must be used for any future trending of the cells internal ohmic measurements because of variances in test equipment and the type of ohmic measurement used by different manufacturer's equipment." While we understand the importance of creating a baseline, it is not feasible to expect the test equipment be the same as the manufacturer's test equipment or even the same test equipment over the life of the battery. The expected life of a battery may be in excess of 20 years and it is not feasible to expect that the type of equipment will not change during this period. 2. On Page 65, paragraph 6, it states:"all manufacturers of internal ohmic measurement devices have established libraries of baseline values." We question the availability of baseline libraries for all manufacturers considering the variety and longevity of installations.
Response: Thank you for your comments. 1. The "Supplementary Reference and FAQ" concerning types of equipment have been changed per your suggestion to reflect consistent test data as opposed to exactly the same piece of test equipment. 2. Many manufacturers of "Ohmic" test equipment have established libraries of baseline data. You are correct that test equipment manufacturers may not have data on every battery in service today. Several manufacturers of batteries (not all) have libraries for some (but perhaps not all) of their products. To achieve significant results from a trending program one needs to have good baseline data. The "Supplementary Reference and FAQ" document has been revised to reflect your concern – the word, "all" was changed to "many".		

Organization	Yes or No	Question 1 Comment
MRO's NERC Standards Review Subcommittee	Yes	Yes, however, in the "Supplemental reference and FAQ" document on page 65 this is one area of concern. Page 65, paragraph 4 "the type of test equipment used to establish the baseline must be used for any future trending of the cells internal ohmic measurements because of variances in test equipment and the type of ohmic measurement used by different manufacturer's equipment" While we understand the importance of creating a baseline, it's not feasible to expect the test equipment to be the same as the manufacturer's test equipment or even the same test equipment over the life of the battery. The expected life of a battery may be in excess of 15 years and it is not feasible to expect that the type of test equipment will not change during this period. We suggest changing the wording to read that consistent test equipment should be used to provide consistent/comparable results.
Response: Thank you for your comments. The statements concerning types of equipment have been changed per your suggestion to reflect consistent test data as opposed to exactly the same piece of test equipment.		
The Detroit Edison Company	Yes	Yes, the tables do provide more clarity. It is much easier to understand the requirements now that they are broken down by technology, and the exclusion of intervals on certain activities based on the individual monitoring attributes is helpful. I appreciate the thought that went into revising this.
Response: Thank you for your comments.		
New York Power Authority (1)	Yes	No comments.
ITC	Yes	The re-structured tables are easier to use.
Response: Thank you for your comments.		
Luminant	Yes	No comments.
BGE	Yes	No comments.
Luminant	Yes	No comments
Northeast Power Coordinating Council	Yes	

Organization	Yes or No	Question 1 Comment
Electric Market Policy	Yes	
Santee Cooper	Yes	
Bonneville Power Administration	Yes	
SPP reliability standard development Team	Yes	
Pepco Holdings Inc	Yes	
Imperial Irrigation District	Yes	
FirstEnergy	Yes	
Western Area Power Administration	Yes	
NextEra Energy	Yes	
Liberty Electric Power LLC	Yes	
FHEC	Yes	
Farmington Electric Utility System	Yes	
Central Lincoln	Yes	
Illinois Municipal Electric Agency	Yes	
Shermco Industries	Yes	
Dominion Virginia Power	Yes	

Organization	Yes or No	Question 1 Comment
American Electric Power	Yes	
CPS Energy	Yes	
US Army Corps of Engineers	Yes	
Alliant Energy	Yes	
GDS Associates	Yes	
Independent Electricity System Operator	Yes	
MidAmerican Energy Company	Yes	

2. The SDT has modified the Implementation Periods within the Implementation Plan. Do you agree with the changes? If not, please provide specific suggestions for improvement.

Summary Consideration: Most commenters who responded to this question agreed with the proposed Implementation Plan. There was no predominant theme in the comments. A few commenters focused on the perceived short time period allowed for the initial conversion and development of their maintenance program while and other commenters suggested specifying Jan. 1 as an interval marker to ease in calendar year interval determination.

The SDT believes that the time frames in the proposed Implementation Plan are adequate for conversion when considering the complete time frame that is likely to occur between industry approval vote and regulatory approvals.

The Implementation Plan was modified to provide for a lengthened implementation period for R1 and the less-than-1-calendar-year activities in R2 and R3 to allow entities not subject to regulatory approvals of 9 additional months following BOT approvals, and, for the remaining activities, of 12 additional months following BOT approvals, to be more consistent with the expected Regulatory Approval timelines. Additionally, all "calendar year" implementation periods were revised to "months" for additional clarity.

The team also clarified that during the phase-in of the requirements in PRC-005-2, entities must be prepared to identify whether each component is being maintained according to PRC-005-2, or according to PRC-005-1, PRC-008-0, PRC-011-0, and PRC-017-0.

Under Item 4a, the team corrected the reference to generating plant outages to change "two years" to "three years" to align with the time allocated for becoming 30% compliant (3 years) with maintenance of components subject to a 6 year interval.

Organization	Yes or No	Question 2 Comment
Tri-State G&T		The draft standard requires the PSMP to include maintenance and testing intervals for Station DC supply associated with protective functions (including batteries, battery chargers, and non-battery-based dc supply). Does this requirement include DC systems (batteries not included in station batteries) used by communication systems necessary for the correct operation of protective functions?
Response: Thank you for your comments. This comment does not apply to the Implementation Plan.		
Consumers Energy (4)	Ballot Comment - Negative	The implementation period for R1 and R3 for the component types addressed in Tables 1-3 and 1-5 is not adequate. The requirements may cause entities to identify components very differently than they are currently doing, and doing so may take several years to complete. The Implementation Plan for R1 and R3 is too aggressive in that it may not permit entities to complete the identification of discrete components and the associated maintenance and implement their program as currently proposed. We propose that the Implementation Plan specifically address the components in Table 1-3 and 1-5 with a minimum of 3 calendar

Organization	Yes or No	Question 2 Comment
		years for R1 and 12 calendar years after that for R4.
Response: Thank you for your comments. The SDT believes that the degree of flexibility written in the standard for categorizing (and subcategorizing) is sufficient for accomplishing the requirements within the time frames given in the Implementation Plan. For example, the voltage and current sensing devices may be individually identified or identified by group (associated with a relay). Examples of different ways to group the dc control circuitry discrete components include individual circuits, individual lockout devices, component protected, by control panel, or by station. The method chosen for the representation will impact the amount of time required to transform a maintenance program.		
Ameren Services (1)	Ballot Comment - Affirmative	PSMP Implement Date should commence at the beginning of a Calendar year (i.e., January 1st). This is the most practical way to transition assets from our existing PRC-005-1 plans
Response: Thank you for your comments. The SDT believes that the proposed Implementation Plan intervals are long enough to provide an entity the amount of time it will take to transition to the new intervals. Considering the additional time between an approved ballot by the industry through the NERC BOT approval and regulatory agency approval, it is very likely that an entity may have an additional 6-9 months to transition to the new program. The guidance provided to drafting teams by NERC suggests that standards should be effective at the beginning of a calendar quarter, rather than a calendar year.		
Independent Electricity System Operator	No	We commented on this before and we will comment again. The time periods for FERC-jurisdictional entities and non-jurisdictional entities should have at least a 3-month difference to allow some time for FERC approval after BoT adoption in an attempt to more or less put the effective dates of the two groups of entities in the same general time frame. The implementation plan as presented will always result in an effective date for the non-jurisdictional entities to be at least some months (the time between BoT adoption and FERC approval) earlier than their jurisdictional counterparts.
Response: Thank you for your comments. The Implementation Plan was modified to provide for a lengthened implementation period for R1 and the less-than-1-calendar-year activities in R2 and R3 to allow entities not subject to regulatory approvals of 9 additional months following BOT approvals, and, for the remaining activities, of 12 additional months following BOT approvals, to be more consistent with the expected Regulatory Approval timelines.		
NIPSCO	No	This new standard's calibration intervals outlined here will require additional staff at our organization. In order to get people hired and trained the implementation plan should allow more time for the phase-in period. From experience, calibration should have been de-emphasized since more concerns are discovered during full tests.
Response: Thank you for your comments. The SDT believes that the proposed Implementation Plan intervals are long enough to provide an entity the amount of time it will take to transition to the new intervals. Considering the additional time between an approved ballot by the industry through the NERC BOT approval and regulatory agency approval, it is very likely that an entity may have an additional 6-9 months to transition to the new program.		

Organization	Yes or No	Question 2 Comment
Tampa Electric Company	No	The new maintenance plan has to be completed in 1 year. 1. Would that mean it is required to identify and list every element that requires testing in a database within the first year? This will be a time intensive effort that probably that would be difficult to complete in a year with current personnel. 2. After 1 year, would entities be required to start implementing the plan depending on the maintenance intervals of the equipment? Qualified people would have to be in place to start the work, again this would be difficult to accomplish with current personnel.
Response: Thank you for your comments. 1. No. Please read R1 carefully to determine what's necessary to be implemented. There is no requirement to have a database – just to have a PSMP that identifies the component "types" and for each component type, the associated type of maintenance program, associated maintenance activities, maintenance intervals, and, for component types that use monitoring to extend the intervals, the appropriate monitoring attributes. There is no requirement to identify and list every element. 2. Yes. The implementation of the plan must proceed as indicated.		
Indeck Energy Services	No	The last part of the implementation plan is vague, if not undefined. The implementation should "follow the previous maintenance intervals until all maintenance is transitioned to the new intervals."
Response: Thank you for your comments. The SDT presumes that your comment is related to the last paragraph of the General Consideration section of the proposed Implementation Plan. The entity should follow the previous maintenance intervals for any specific components until that component is addressed by PRC-005-2. As the transition is occurring, the entity should adjust its maintenance and testing schedule so that it is able to demonstrate that the required % of components meet the maintenance intervals given in the PRC-005-2 tables at each of the % compliant milestones given in this Implementation Plan.		
American Electric Power	No	On page 2 of the implementation plan, it is indicated that PRC-005-1, PRC-008-0, PRC-011-0 and PRC-017-0 shall be retired and that entities will be required to identify which components will be addressed under PRC-005-1 or PRC-005-2. There is no wording to cover those components that are still being addressed under PRC-008-0, PRC-011-0 or PRC-017-0 during the implementation period.
Response: Thank you for your comments. As noted in the "General Considerations", the entity should follow the previous maintenance intervals for any specific components until that component is addressed by PRC-005-2. As the transition is occurring, the entity should adjust its maintenance and testing schedule so that they are able to demonstrate that the required % of components meet the maintenance intervals given in the PRC-005-2 tables at each of the % compliant milestones given in this Implementation Plan. The team also clarified that during the phase-in of the requirements in PRC-005-2, entities must be prepared to identify whether each component is being maintained according to PRC-005-2 or according to PRC-005-1, PRC-008-0, PRC-011-0, or PRC-017-0.		

Organization	Yes or No	Question 2 Comment
Bonneville Power Administration	No	Many of the maintenance intervals in the standard are given in the terms calendar years or calendar months. There is no description of these terms in the NERC Glossary. My Webster's dictionary defines calendar year as the period that begins on January 1 and ends on December 31. There is no definition in my dictionary of calendar month. Is the intent of the term calendar year in the standard that maintenance intervals start on January 1 and end on December 31? This would make all maintenance due on December 31, and December would be a very busy time. Does this mean that if I do maintenance on something with a maximum interval of six calendar years in June of 2011 that it will be due again on January 1 of 2017 instead of June 1 of 2017? We believe that the drafting team intends for maintenance to be due after a given number of years that begins to elapse immediately after the previous maintenance is completed so that in the previous example the maintenance would be due on June 1, 2017. Please remove the word calendar from the maximum maintenance intervals to remove this confusion.
Response: Thank you for your comments. The intent of the term calendar year is to indicate that the maintenance is due sometime during a particular calendar year (Jan-Dec). If you perform maintenance in June 2011 and have a 6 calendar year interval, then the same maintenance is again due sometime in 2017 (2011 + 6). The NERC Compliance Application Notice CAN-0010, posted 19 Apr 2011, supports this compliance guideline. An interval of one calendar year means that the activity or event must be conducted at least once within each calendar year.		
FHEC	No	Can't locate the implementation plan in the posted materials.
Response: Thank you for your comments. The implementation plan was provided as a separate document within the posting and is available in the Standards Under Development section of the NERC website under Project 2007-17: http://www.nerc.com/filez/standards/Protection_System_Maintenance_Project_2007-17.html		
FirstEnergy	No	Although we agree with the timeframes being afforded to achieve compliance, we suggest the following changes: 1. During the last comment period, we suggested changes to the wording regarding retirement of existing standards on page 2. We do no see a response to these comments. Therefore, we would like to reiterate that the four existing standards are to be retired upon the effective date of the new standard and not upon regulatory approval. 2. In 4a of the plan, since the timeframe for 30% completion is 3 calendar years, we suggest a change to three calendar years for the parenthetical phrase “(or, for generating plants with scheduled outage intervals exceeding two calendar years, at the conclusion of the first succeeding maintenance outage)”. Change ”two” to “three” 3. We suggest the implementation plan be included within the body of the standard. It is very burdensome for

Organization	Yes or No	Question 2 Comment
		entities to have to look for the implementation plan and we believe that a "one-stop shopping" approach would alleviate this burden.
Response: Thank you for your comments. 1. The Effective Date within the Standard was stated as it is based on verbal advice of NERC Compliance – several drafts ago. 2. The Implementation Plan has been modified as you suggested. 3. The Implementation Plan is provided separately in accordance with instructions from the NERC Standards Department and Standards Committee. Further, at the end of all transition periods, it is not needed in the standard.		
ExxonMobil Research and Engineering	No	
Ameren	Yes	While we agree with the Implementation Periods, it would be best to alter R2 and R3 implementation such that components with maximum allowable intervals of 1 year or longer align with a true calendar year (i.e. begin with January 1).
Response: Thank you for your comments. The SDT believes that the proposed Implementation Plan intervals are long enough to provide an entity the amount of time it will take to transition to the new intervals. Considering the additional time between an approved ballot by the industry through the NERC BOT approval and regulatory agency approval, it is very likely that an entity may have an additional 6-9 months to transition to the new program. The guidance provided to drafting teams by NERC suggests that standards should be effective at the beginning of a calendar quarter, rather than a calendar year.		
MidAmerican Energy Company	Yes	1. In the background section of the implementation plan in item two it states "...it is unrealistic for those entities to be immediately in compliance with the new intervals." Recent compliance application notices indicate that auditors are requiring entities to include proof of compliance to maintenance intervals by providing the most recent and prior maintenance dates. The implementation document could be improved by providing clarity to what is expected with regard to when an entity is expected to provide evidence of maintenance interval compliance given the quoted item above. As an example in the section the implementation plan for a 6 year interval item it states: "The entity shall be at least 30% compliant on the first day of the first calendar quarter 3 years following applicable regulatory approval.." In keeping with the previously quoted "reasonableness" criteria it would seem that 30% compliant would mean only one test action would be needed to be completed by the indicated deadline and the next one would be required no later than 6 years from that first test. It is recommended that the implementation plan document be improved to clarify this issue. 2. In addition, it would seem appropriate to allow entities that decide to implement PRC-005-2 requirements

Organization	Yes or No	Question 2 Comment
		before the standard becomes effective to count the maintenance they do before the effective date in the implementation plan schedule and in the testing interval compliance.
Response: Thank you for your comments. 1. The Implementation Plan establishes that an entity must follow its current plan until the new standard is implemented for any specific component. Therefore, an entity should have documentation that it has maintained any given component according to its current program until it is addressed in the revised program (including all relevant activities addressed in PRC-005-2). An entity should adjust it's maintenance and testing schedule so that it is able to demonstrate that the required % of components meet the maintenance intervals given in the PRC-005-2 tables at each of the % compliant milestones given in the Implementation Plan. The team also clarified that during the phase-in of the requirements in PRC-005-2, entities must be prepared to identify whether each component is being maintained according to PRC-005-2 or according to PRC-005-1, PRC-008-0, PRC-011-0, or PRC-017-0. 2. If entities begin to implement the PRC-005-2 activities before the effective date, it seems to the SDT that this entity will find that they it has fully implemented PRC-005-2 sooner, and will thus have attained a stable sustainable program that much sooner.		
New York Power Authority (1)	Ballot Comment - Affirmative	2. The SDT has modified the Implementation Periods within the Implementation Plan.. Do you agree with the changes? If not, please provide specific suggestions for improvement. X0 Yes 0 No Comments:
Luminant	Yes	No comments.
BGE	Yes	No comments.
Luminant	Yes	No comments
Northeast Power Coordinating Council	Yes	
MISO Standards Collaborators	Yes	
Electric Market Policy	Yes	
Santee Cooper	Yes	

Organization	Yes or No	Question 2 Comment
SPP reliability standard development Team	Yes	
Pepco Holdings Inc	Yes	
Tennessee Valley Authority	Yes	
Imperial Irrigation District	Yes	
PNGC Comment Group	Yes	
MRO's NERC Standards Review Subcommittee	Yes	
The Detroit Edison Company	Yes	
Western Area Power Administration	Yes	
NextEra Energy	Yes	
Arizona Public Service Company	Yes	
Liberty Electric Power LLC	Yes	
Ingleside Cogeneration LP	Yes	
Farmington Electric Utility System	Yes	
Duke Energy	Yes	
Central Lincoln	Yes	
Illinois Municipal Electric Agency	Yes	

Organization	Yes or No	Question 2 Comment
Manitoba Hydro	Yes	
Shermco Industries	Yes	
Dominion Virginia Power	Yes	
CPS Energy	Yes	
US Army Corps of Engineers	Yes	
Alliant Energy	Yes	
Georgia Transmission Corporation	Yes	
American Transmission Company, LLC	Yes	
GDS Associates	Yes	
ITC	Yes	
Xcel Energy	Yes	

3. The SDT has modified the VSLs, VRFs and Time Horizons with this posting. Do you agree with the changes? If not, please provide specific suggestions for improvement.

Summary Consideration: Many commenters pointed out an error (which was corrected by the SDT) within the VSL for R2, where the Lower and High VSLs contained identical text.

Many comments were offered on the VRFs that demonstrated unfamiliarity with the relationship between VSLs and VRFs. Violation Risk Factors identify the reliability-related risk associated with non-compliance; VSLs are applied after a finding of non-compliance to identify the degree of non-compliance.

Many duplicate comments were offered on the content of the standard which were not relevant to the VRFs, VSLs, or Time Horizons and these were answered elsewhere in this document

VSLs for R1:

- Phased VSLs were added to address R1 Part 1.1, which was previously addressed only as a "Severe" VSL.
- A reference was added within the R1 VSL to Part 1.3.
- R1 High VSL was revised to add a reference to Table 2.

VSLs for R2:

- One element of the R2 VSL was made binary (Severe), rather than "phased" (in two steps), in response to several comments.

VSLs for R3:

- The R3 VSLs were revised to replace "complete" with "implement and follow" for consistency with the Requirement.

Other minor editorial changes were made throughout the VSLs in response to comments.

Organization	Yes or No	Question 3 Comment
Tri-State G&T		On Page 19, Table 1-5, the standard requires that monitored electromechanical lockouts be maintained every 6 years. Why is there inconsistency in the interval between the monitored lockouts and monitored relays?
Response: Thank you for your comments. These comments are not relative to the non-binding poll of the VRFs and VSLs for PRC-005. Please see our response to your comments on the standard provided elsewhere in this report.		

Organization	Yes or No	Question 3 Comment
SPP reliability standard development Team	No	1. If the maintenance is done prior to the maximum interval would it then reset the clock. Or should it read that maintenance and testing should be done at least once per quarter etc. 2. We would like to see the plan split up into generation time horizons and transmission time horizons, these can be significantly different.
Response: Thank you for your comments. 1. Provided that all required maintenance activities are done, the activity for that interval is taken care of, and the clock is reset. 2. The options for the Time Horizons are "Long-term Planning" (a planning horizon of one year or longer), "Operations Planning" (operating and resource plans from day-ahead up to and including seasonal), "Same Day Operations" (actions required within the timeframe of a day, but not real-time), "Real-time Operations" (actions required within one hour or less to preserve the reliability of the bulk electric system), and "Operations Assessment" (follow-up evaluations and reporting of real time operations). All of the requirements are properly assigned a Time Horizon of "Long Term Planning". There is no provision for different Time Horizon between entity types.		
Indeck Energy Services	No	1. The VSL's for R1 should combine the ones for Lower, Moderate and High VSL into Lower VSL. The Severe VSL should be moved to the Moderate VSL. Because R1 is administrative, it shouldn't have High or Severe VSL's. 2. The R2 High VSL (3 yrs) is more stringent than the Severe VSL (5 yrs). 3. The R3 VSL's need to have combined numbers of components or percentages because small generators may only have 25 relays or 1 battery and would be categorized as High or Severe VSL with a few components affected. The percentage could apply to RE's with more than 250 components included in the PSMP. 4. The Medium VRF for R1 should be Low VRF because R1 is administrative. Only the performance of the maintenance has anything more than Low VRF. 5. The Medium VRF for R2 is OK. 6. Having a High VRF for R3 is without basis. R3 should have Medium VRF.
Response: Thank you for your comments. 1. R1 is not administrative – it is foundational to developing the program. The VSLs as established conform to the NERC Violation Severity Level Guidelines. 2. The SDT disagrees. R2 "High" reflects a failure to return the "Countable Events" to an acceptable level in three years. R2 "Severe" reflects even worse performance, in that the entity has failed to return the "Countable Events" to an acceptable level in an even longer period – five years.		

Organization	Yes or No	Question 3 Comment
3. The SDT disagrees. A smaller entity will have less to maintain in accordance with the standard, and thus the percentages are still appropriate. 4. R1 is not administrative – it is foundational to developing the program, and not having a program could "directly and adversely affect the electrical state or capability of the bulk electric system, or the ability to effectively monitor, control, or restore the bulk electric system" as established in the criteria for a Medium VRF, even if the devices are being maintained to some degree. Without having an established program, the remaining requirements are far less meaningful. 5. Thank you. 6. The SDT believes that failure to maintain Protection Systems could "place the bulk electric system at an unacceptable risk of instability, separation, or cascading failures" as established in the criteria for a High VRF. This concern is borne out by observations relating to several disturbances over the last several years. Also, a High VRF for R3 is consistent with the PRC-005-1 VRF for the corresponding requirement (R2).		
FRCC (10)	Non-binding Poll Comment	The VSL's need additional work. Here are some of the issues I see: 1. For R1, the High VSL has a condition that states "Failed to include all maintenance activities or intervals relevant for the identified monitoring attributes specified in Tables 1-1 through 1-5. (Part 1.4)" This condition is really a combination of what is required in Part 1.3 AND Part 1.4. How would the compliance enforcement determine an appropriate VSL if the registered entity only did not do Part 1.3 (maintenance activities)? These should be separated. 2. Also the Severe VSL is also identified for failure to specify three or more component types. I believe it is more appropriate to have three in High VSL and leave the Severe VSL for 4 or more. 3. For R2, the Lower VSL lists item 1) as "Failed to reduce countable events to less than 4% within three years." This is also the same condition that is identified for the High VSL. It is also the same condition that is listed as item 2) for the Severe VSL. In Lower and Severe, the items are separated by OR so they are each distinct. So, which VSL should the compliance enforcement authority use? 4. Also for R2, Lower VSL is indicated for failure to document for countable events for 5% or less of components. Then you jump to Severe VSL for over 5%. That seems like a very huge jump. The Moderate and High VSLs should be used to make a more gradual difference. 5. Finally, for R2, the Lower VSL is indicated if a segment has 54-59 components and a Severe is more than 54 components. In reading Attachment A, it states that a segment MUST contain at least sixty (60) individual components. This would appear to me to be all or nothing. I would suggest that the only VSL for this would be a Severe if it did not have 60 or more.
Response: Thank you for your comments.		

Organization	Yes or No	Question 3 Comment
1. The SDT disagrees. For the assessment of compliance to R1, Part 1.3 and Part 1.4 work together in the fashion identified in the VSL. 2. The SDT disagrees, and believes that failure to address three or more component types (out of a total of five) indeed reflects a Severe violation of the requirement. 3. Thank you for catching this. The High VSL has been modified from three years to four years. Where elements of the VSL are separated by "or", the compliance enforcement authority should use each of them as appropriate. 4. The SDT disagrees. The documentation of countable events is so fundamental to a performance-based maintenance program that the SDT has assigned a Lower VSL to minor transgressions, with all other transgressions being regarded as a Severe VSL. 5. The SDT has modified the R2 VSL for the segment population to be binary as you suggested.		
Tri-State G & T Association, Inc. (3) (5)	Ballot Comment	1. On Page 7, R2 Violation Severity Levels, "Entity has Protection System elements in a performance-based PSMP but has failed to reduce countable events to less than 4% within three years" is shown as both a Lower VSL and a High VSL. What differentiates the two VSLs? 2. R1 VSL - Second item in Severe VSL is not addressed in any lower VSL. Should there also be a comparable violation in Lower and Moderate?
Response: Thank you for your comments. 1. Thank you for catching this. The High VSL has been modified from three years to four years. 2. VSLs have been added to Moderate and High to address lesser violations.		
Tri-State G & T Association Inc. (3)	Non-binding Poll Comment	1. Comment 1: On Page 7, R2 Violation Severity Levels, "Entity has Protection System elements in a performance-based PSMP but has failed to reduce countable events to less than 4% within three years" is shown as both a Lower VSL and a High VSL. What differentiates the two VSLs? 2. Comment 2: R1 VSL - Second item in Severe VSL is not addressed in any lower VSL. Should there also be a comparable violation in Lower and Moderate?
Response: Thank you for your comments. 1. Thank you for catching this. The High VSL has been modified from three years to four years. 2. VSLs have been added to Moderate and High to address lesser violations.		
Tri-State G & T Association Inc. (5)	Non-binding Poll	1: On Table 1-2, page 11: The standard describes the following component attributes, "Any unmonitored communications system necessary for correct operation of protective functions, and

Organization	Yes or No	Question 3 Comment
	Comment	not having all the monitoring attributes of a category below." How does this apply to redundant communication systems? If the primary communications channel fails the protective relay automatically fails over to the back-up channel and continues to function properly. Are redundant communication channels excluded from this component attribute and associated interval? Also, if a relay is set to operate in a manner typical when communication is not used for protection (i.e. defaulting to step-distance functions with a loss of communication), is the defaulted operation of the relay considered "correct operation" thereby excluding the communication as necessary for its correct operation? Please clarify the term correct operation and how it applies to redundant communication systems and/or the performance of the relay in the absence of communication. 2: The draft standard requires the PSMP to include maintenance and testing intervals for Station DC supply associated with protective functions (including batteries, battery chargers, and non-battery-based dc supply). Does this requirement include DC systems (batteries not included in station batteries) used by communication systems necessary for the correct operation of protective functions? 3: On Page 19, Table 1-5, the standard requires that electromechanical lockout control circuits be maintained every 6 years and protective function unmonitored control circuits be maintained every 12 years. Why is there inconsistency in the interval between the electromechanical lockout and protective function control circuits? 4: On Page 7, R2 Violation Severity Levels, "Entity has Protection System elements in a performance-based PSMP but has failed to reduce countable events to less than 4% within three years" is shown as both a Lower VSL and a High VSL. What differentiates the two VSLs?
Response: Thank you for your comments. 1. These comments are not relative to the non-binding poll of the VRFs and VSLs for PRC-005. Please see our response to your comments on the standard provided elsewhere in this report. 2. These comments are not relative to the non-binding poll of the VRFs and VSLs for PRC-005. Please see our response to your comments on the standard provided elsewhere in this report. 3. These comments are not relative to the non-binding poll of the VRFs and VSLs for PRC-005. Please see our response to your comments on the standard provided elsewhere in this report. 4. Thank you for catching this. The High VSL has been modified from three years to four years.		
Farmington Electric Utility System	No	VSL on R2: Lower criteria item 1; the wording is identical High VSL. FEUS recommends keeping the criteria in the Lower VSL.

Organization	Yes or No	Question 3 Comment
City of Farmington (3)		
Response: Thank you for your comments. Thank you for catching this. The High VSL has been modified from three years to four years.		
Alliant Energy Corp. Services, Inc. (4)	Non-binding Poll Comment	The Lower and High VSL for Requirement 2 have the same description. The Lower VSL has other possible items, but there is a conflict where an entity could argue for both a Lower and High VSL. That needs to be clarified.
Response: Thank you for your comments. Thank you for catching this. The High VSL has been modified from three years to four years.		
GDS Associates	No	1. Suggest clarification of the VSL for R2. It appears that R2 Lower VSL is also contained in the R2 High VSL. 2. If the maintenance is completed prior to the maximum interval, would it then reset the clock? Or should it read that maintenance should be done at least once per quarter? 3. The plan should split into generation time horizons and transmission time horizons since these can be significantly different
Response: Thank you for your comments. 1. Thank you for catching this. The High VSL has been modified from three years to four years. 2. Yes – it would reset the clock, provided that all required activities are completed during the performance of the maintenance. 3. The SDT disagrees. The options for the Time Horizons are "Long-term Planning" (a planning horizon of one year or longer), "Operations Planning" (operating and resource plans from day-ahead up to and including seasonal), "Same Day Operations" (actions required within the timeframe of a day, but not real-time), "Real-time Operations" (actions required within one hour or less to preserve the reliability of the bulk electric system), and "Operations Assessment" (follow-up evaluations and reporting of real time operations). All of the requirements are properly assigned a Time Horizon of "Long Term Planning". There is no provision for different Time Horizon between entity types.		
Alabama Power Company (3) Georgia Power Company (3) Gulf Power (3) Mississippi Power (3)	Non-binding Poll Comment	But only if the clean version on Page 7 under Violation Severity Levels R2/High VSL match the redline dated 4/12/2011. Entity has Protection System elements in a performance-based PSMP but has failed to reduce countable events to less than 4% within four years.
Response: Thank you for your comments. The clean version represents the content desired for the Standard. The red-line is affected by peculiarities of		

Organization	Yes or No	Question 3 Comment
the red-lining tool within Microsoft Word.		
Tampa Electric Company	No	VSL is severe for more than 4% Countable Events on R2. It does not seem feasible.
Response: Thank you for your comments. R2, by reference to Attachment A, requires that entities using performance-based maintenance reduce Countable Events to less than 4% within three years. The R2 Severe VSL reflects failure to do so within five years.		
Manitoba Hydro	No	1. VSL for Requirement 2:-Needs to use consistent terminology. The standard requirements refer to components and component types, not elements. 2. The violation "Entity has Protection System elements in a performance-based PSMP but has failed to reduce countable events to less than 4% within three years" appears in both the Lower VSL column and the High VSL column. The violation cannot be both Lower and High. VSL for Requirement R3: -Suggested wording "completed its scheduled program".
Manitoba Hydro (1) (3) (5) (6)	Non-binding Poll Comment	Manitoba Hydro is voting negative for the following reasons: 1. VSL for Requirement 2: -Needs to use consistent terminology. The standard requirements refer to components and component types, not elements. 2. The violation "Entity has Protection System elements in a performance-based PSMP but has failed to reduce countable events to less than 4% within three years" appears in both the Lower VSL column and the High VSL column. The violation cannot be both Lower and High. 3. VSL for Requirement R3: -Suggested wording "completed its scheduled program".
Response: Thank you for your comments. The term, "element" is not used in any of the VSLs. 2. Thank you for catching this. The High VSL has been modified from three years to four years. 3. The SDT disagrees; the VSL address failure to complete the scheduled program. The suggested change does not reflect this.		
Duke Energy	No	Typographical error - the High VSL for R2 has been incorrectly changed to "within three years" from "within four years". This is now the same as the Lower VSL.
Duke Energy	Non-binding Poll	There is a typographical error on the High VSL for R2. It has been incorrectly changed to "within three years" from "within four years". This is now the same as the Lower VSL.

Organization	Yes or No	Question 3 Comment
	Comment	
Response: Thank you for your comments. Thank you for catching this. The High VSL has been modified from three years to four years.		
Kristina M. Loudermilk	Non-binding Poll Comment	1. In VSL R2 I find it confusing for the Lower VSL and High VSL. In the Lower VSL for R2 #1 is mentioned, but again mentioned in High VSL. IS there an easier way to make that flow? 2. Also I found that I have forgotten a comment for the Standard itself.... In Attachment A, #5 is mentioned twice. I understand as to why, so I think, but in the "To Maintain" #5 says that one has to use the prior year's data. It matches the exact form of "how to establish the performance based PSMP". I find this confusing. So does this mean that testing will be once a year for parts of the segment. I did not get that same understanding from the support documents. Is there way to reword one of the #5's to show case a difference. Or is this on purpose? I just found it confusing.
Response: Thank you for your comments. 1. The High VSL has been modified from three years to four years. 2. The “first” #5 applies to establishing the performance-based program; the “second” one – now modified to be #4 in the second section, applies to maintaining the performance-based program on a continuing basis.		
Alliant Energy	No	The LOW and HIGH VSL for R2 are the same. There are additional possibilities for the LOW, but it is possible to be in both the LOW and HIGH VSL at the same time. We recommend removing #1 in the LOW VSL category to resolve the issue.
Response: Thank you for your comments. Thank you for catching this. The High VSL has been modified from three years to four years.		
The Detroit Edison Company	No	R2 - It appears that the Lower VSL point 1) and High VSL are identical.
Response: Thank you for your comments. Thank you for catching this. The High VSL has been modified from three years to four years.		
Consolidated Edison Co. of New York (1) (3) (5) (6)	Ballot Comment - Affirmative	Clarification is needed to assure that the industry more fully understands how the percentage of “maintenance correctable issues” will be computed in the R3 VSL.
Consolidated Edison Co. of New York (1) (5) (6)	Non-binding Poll	1: Clarification is needed to assure that the industry more fully understands how the percentage of “maintenance correctable issues” will be computed in the R3 VSL.

Organization	Yes or No	Question 3 Comment
	Comment	2: We recommend increasing the Table 2 reporting window from 24-hours to 72-hours for facilities not continuously manned in order to accommodate discovery and reporting of failed alarms at these facilities which may occur over a long (3-day) holiday weekend. 3: We recommend that the drafting team recognize that a “fail safe” or “self-reporting” alarm design serves as an acceptable alternative to periodic testing. This “fail safe” or “self-reporting” alarm design is equivalent to continuous testing the alarm. When the alarm circuit fails the alarm is set to “alarm on” and automatically notifies the control center, initiating a corrective action.
Response: Thank you for your comments. 1. The SDT believes that this is clear; if an entity has 20 maintenance-correctable issues and has failed to initiate resolution of one, it has failed to initiate resolution of 5% of the maintenance-correctable issues. 2. These comments are not relative to the non-binding poll of the VRFs and VSLs for PRC-005. Please see our response to your comments on the standard provided elsewhere in this report. 3. These comments are not relative to the non-binding poll of the VRFs and VSLs for PRC-005. Please see our response to your comments on the standard provided elsewhere in this report.		
Independent Electricity System Operator Independent Electricity System Operator (2)	No Non-binding Poll Comment	(1) We do not agree with the High VRF for R3 which asks for implementing the maintenance plan (and initiate corrective measures) whose development and content requirements (R1 and R2) themselves have a Medium VRF. Failure to develop a maintenance program with the attributes specified in R1, and stipulation of the maintenance intervals or performance criteria as required in R2, will render R3 not executable. Hence, we suggest that the VRF for R3 be changed to Medium. (2) The Severe VSL for R2 is improper. First, the reference to R3 is incorrect. Second, the first condition that says: “Failed to establish the entire technical justification described within R3 for the initial use of the performance-based PSMP” introduces a requirement not stipulated in R2 itself. We suggest to remove this condition. If the SDT feels strongly that the technical justification (we’re not sure what exactly it is) needs to be established for the initial use of the performance-based PSMP, then R2 should be revised to capture this requirement.
Response: Thank you for your comments. 1. The SDT believes that failure to maintain Protection Systems could “place the bulk electric system at an unacceptable risk of instability, separation, or cascading failures” as established in the criteria for a High VRF. This concern is borne out by observations relating to several disturbances over the last several years. However, even if the program is not fully documented per R1 and R2, devices may still be maintained; thus the reduced VRF for these requirements. Also, the R3 “High” VRF is consistent with the VRF assigned to the similar PRC-005-1 requirement (R2).		

Organization	Yes or No	Question 3 Comment
2. The Severe VSL for R2 has been corrected to refer to R2. The remainder of the Severe VSL for R2 is correct, in that R2 itself specifies that the procedure in Attachment A must be used, both to establish and maintain a performance-based maintenance program. The definition of maintenance correctable issue has been revised to be clearer.		
Tennessee Valley Authority	No	TVA has 590 Pilot Relay (Carrier Blocking) Terminals that are tested twice a year. After an extensive study of carrier failures over a 5-year period, it was determined that we were not having any failures that could have been prevented by a functional test. In January 2008, we reduced our frequency from 4 times per year to 2 times per year. The failure rate has remained about the same since that change. As PRC 005-2 currently states, the PM frequency would be 3 months. Allowing for a one-month grace period would actually require the interval to be set at 2 months. Therefore, the interval we used prior to 2008 (4 times per year) still would not make TVA compliant with the stated 3 month interval.TVA Power Control Systems is in the process of developing extensive PM tests for carrier terminals to complement the existing PM program. This PM would record signal levels, reflected power, line losses, and other pertinent data. It is my position that this PM will improve reliability more than increasing the frequency of the functional test.
Response: Thank you for your comments. These comments are not relative to the non-binding poll of the VRFs and VSLs for PRC-005. Please see our response to your comments on the standard provided elsewhere in this report.		
American Electric Power	No	This standard encompasses a very broad range of component types and functionality. It also encompasses broad segments of the BES. The proposed VSLs and VRFs place the same level of severity or priority on facilities that serve local load with that of an EHV facility. The percentages indicated in the VSLs seem to be too strict based upon the vast quantity of elements in scope and broad range of application.
Response: Thank you for your comments. The NERC criteria for VSLs do not currently permit them to allow some level of non-performance without being in violation. The NERC VRF Guidelines establish the criteria for assigning VRFs and do not provide for multiple VRFs for a single requirement, and the percentages (where used) assigned within the VSLs conform to the criteria established within the NERC VSL guidelines.		
FHEC	No	For Distribution Provider level equipment there should be no High or Severe VSLs
Response: Thank you for your comments. The SDT disagrees; the VSLs are intended to address the degree to which an entity fails to comply with each requirement, and the nature of the entity has no bearing on this determination.		

Organization	Yes or No	Question 3 Comment
Pepco Holdings Inc	No	1. Are the bullet items listed for the R2 Severe Violation Severity Level , Item 5 an "and" or an "or"? 5) Failed to: • Annually update the list of components, • Perform maintenance on the greater of 5% of the segment population or 3 components, • Annually analyze the program activities and results for each segment. 2. The wording of the R3 Lower Violation Severity Level seems to imply that an entity that fails to complete 0% (i.e., completes 100%) of its maintenance correctable issues is non-compliant. Entity has failed to complete scheduled program on 5% or less of total Protection System components. OR Entity has failed to initiate resolution on 5% or less of identified maintenance correctable issues. The following re-phrasing is suggested: Entity has failed to complete scheduled program on greater than 0%, but no more than 5% of total Protection System components. OR Entity has failed to initiate resolution on greater than 0%, but less than or equal to 5% of identified maintenance correctable issues.
Response: Thank you for your comments. 1. The VSL has been modified to separate these items with “or”. 2. The SDT disagrees; this description conforms to the guidance in the NERC VSL Guidelines, and VSLs only apply if there is a failure to comply with the relevant requirement.		
Liberty Electric Power LLC (5)	Non-binding Poll Comment	The use of percentages, without accounting for the size of the entity, unfairly burdens small IPPs.
Response: Thank you for your comments. The SDT disagrees. A smaller entity will have less to maintain in accordance with the standard, and thus the percentages are still appropriate.		
Liberty Electric Power LLC	No	See comments at end.
Response: Thank you for your comments. Please see our response to your other comments.		

Organization	Yes or No	Question 3 Comment
ExxonMobil Research and Engineering	No	
Consumers Energy (5)	Non-binding Poll Comment	see comment on R3
Response: Thank you for your comments. These comments are not relative to the non-binding poll of the VRFs and VSLs for PRC-005. Please see our response to your comments on the standard provided elsewhere in this report.		
New York Power Authority (1)	Yes	No comments.
Luminant	Yes	No comments.
BGE	Yes	No comments.
Luminant	Yes	No comments
Northeast Power Coordinating Council	Yes	
MISO Standards Collaborators	Yes	
Santee Cooper	Yes	
Imperial Irrigation District	Yes	
PNGC Comment Group	Yes	
MRO's NERC Standards Review Subcommittee	Yes	
FirstEnergy	Yes	

Organization	Yes or No	Question 3 Comment
Western Area Power Administration	Yes	
NextEra Energy	Yes	
Ingleside Cogeneration LP	Yes	
Central Lincoln	Yes	
Shermco Industries	Yes	
CPS Energy	Yes	
US Army Corps of Engineers	Yes	
Ameren	Yes	
Georgia Transmission Corporation	Yes	
ITC	Yes	
MidAmerican Energy Company	Yes	
Xcel Energy	Yes	
NIPSCO		no comments at this time
Northern Indiana Public Service Co. (3)	Non-binding Poll Comment	One of our concerns is that, while the present standard is 2 pages and is the most highly violated and fined standard, the new proposed standard is 22 pages, the implementation plan is 4 pages and the Supplemental FAQ document is 87 pages.
Response: Thank you for your comments. These comments are not relative to the non-binding poll of the VRFs and VSLs for PRC-005. Please see our		

Organization	Yes or No	Question 3 Comment
response to NIPSC's comments on the standard provided elsewhere in this report.		
Public Utility District No. 2 of Grant County	Non-binding Poll Comment	GCPD has made it a practical practice of not voting affirmative for VRF and VSL until the standard is edited to our satisfaction and can vote affirmative on the standard.
Response: Thank you for your comments. Please see the revisions made to the standard and the drafting team's responses to the comments.		
Florida Municipal Power Agency (4) (5) FMPP (6)	Non-binding Poll Comment	· Section 4.2.1 states that the Standard is applicable to "Protections Systems designed to provide protection BES Elements." Section 15.1 of the Supplementary Reference Document defines the scope as those "devices that receive the input signal from the current and voltage sensing devices and are used to isolate a faulted element of the BES." These two statements are not exactly equivalent, and in fact, are in conflict with the Interpretation of PRC-004-1 and PRC-005-1 for Y-W Electric and Tri-State, Approved by the Board of Trustees on February 17, 2011. Section 4.2.1 should be changed to "Any Protection System that is installed for the purpose of detecting faults on transmission elements (lines, buses, transformers, etc.) identified as being included in the Bulk Electric System (BES) and trips an interrupting device that interrupts current supplied directly from the BES." · Examples #1, #2 and #3 in Section 7.1 of the Supplementary Reference all indicate that it is a requirement to "verify all paths of control and trip circuits" every 12 years. As stated, there would be circuits included in the testing requirement that the SDT did not mean to include in the scope of the Standard (e.g., SCADA closing circuit.) The statements in the illustrative examples should be changed to "verify all paths in the control circuitry associated with protective functions through the trip coil(s) of the circuit breakers or other interrupting devices" to be in line with the definition of a Protection System. · Section 15.5 of the Supplementary Reference Document states: "It was the intent of this Standard to require that a test be made of any communications-assisted trip scheme regardless of the vintage of the technology. The essential element is that the tripping (or blocking) occurs locally when the remote action has been asserted; or that the tripping (or blocking) occurs remotely when the local action is asserted". The SDT should reword this statement recognizing that tests performed on communication systems may not be performed at the same time an entity chooses to perform trip tests on the associated breaker(s). The notion of "overlapping" can be applied, for instance, by taking an outage on one relay set in a fully redundant system, initiating a trip signal from the remote end and observing

Organization	Yes or No	Question 3 Comment
		the trip signal locally. All remaining portions in the local communication-assisted trip paths can then be tested when the local line panel is taken out of service for maintenance.
Response: Thank you for your comments. These comments are not relative to the non-binding poll of the VRFs and VSLs for PRC-005. Please see our response to the same comments on the proposed standard provided elsewhere in this report.		
Seattle City Light (5)	Non-binding Poll Comment	Pursuant to the negative ballot relating to the Standard. Both votes will be affirmed if the comments are addressed.
Response: Thank you for your comments. Please see the drafting team's responses to the comments offered by Seattle on the proposed standard.		
Seattle City Light (6)	Non-binding Poll Comment	Seattle City Light (SCL) commends the Standard Drafting Team (SDT) for the many improvements in the latest draft of proposed standard PRC-005-2. The proposed PRC-005-2 standard is an improvement over the four standards that it will replace. Each draft has been better than that preceding, and the supporting material is very helpful in understanding the impact and implementation of the proposed Standard. However, SCL votes NO for this draft because of 1) the inclusion and treatment of electromechanical lockout relays within the scope of draft Standard and 2) confusion about language between section 4.2 and Requirement 1. Regarding electromechanical lockout relays, SCL is highly concerned about the reliability risks and logistical difficulties associated with meeting the requirements proposed for these relays. Lockout relays operate rarely and are known for reliable service. For many such relays, the proposed maintenance would require clearance of entire bus sections or even multiple bus sections (such as for a bus differential lockout relay). In SCL's opinion, the reliability risks posed by such switching and outages to the Bulk Electric System outweigh the reliability benefits of including lockout relays in the scope of PRC-005-2. If the SDT deems it necessary to include electromechnical lockout relays within PRC-005-2, SCL recommends that a difference be made between the maintenance activities specified for monitored and unmonitored types. The draft Standard describes the requirements for "electromechanical lockout and/or tripping auxiliary devices" in Table 1-5 (p.19) and assigns a 6-year maximum maintenance interval, the same as for other unmonitored relays. Modern electromechanical lockout relays may be specified with a built-in self-monitoring trip-coil alarm. SCL believes the maintenance requirements for electromechanical lockout relays with such an alarm should be similar to those for other alarmed or monitored relays. As such we recommend that a new entry be added to Table 1-5 for monitored electromechanical

Organization	Yes or No	Question 3 Comment
		lockout relays, as follows: • Component Attributes: Electromechanical lockout and/or tripping auxiliary devices which are directly in a trip path from the protective relay to the interrupting device trip coil AND include built-in self-monitoring trip-coil alarm • Maximum Maintenance Interval: 12 calendar years • Maintenance Activities: Verify electrical operation of electromechanical trip and auxiliary devices. Verify that the alarm path conveys alarm signals to a location where corrective action can be initiated. Regarding confusion over language, section 4.2 section identifies five types of Facilities that the standard is applicable to, whereas Requirement 1 indicates that applicable entities need to establish a Protection System Maintenance Program (PSMP) for the Protection Systems designed to provide protection for BES Element(s) (Part 4.2.1 of Section 4.2). As such, it is not clear if PRC-005-2 applies to five Facilities or to certain Protection Systems. SCL believes the intent is to have a PSMP for all Protection Systems identified in "Part A, Section 4.2 - Facilities" and that the language of Requirement 1 may cause confusion or be misleading. We suggest changing the language of Requirement 1 from: • Each Transmission Owner, Generator Owner, and Distribution Provider shall establish a Protection System Maintenance Program (PSMP) for its Protection Systems designed to provide protection for BES Element(s). to: • Each Transmission Owner, Generator Owner, and Distribution Provider shall establish a Protection System Maintenance Program (PSMP) for its Facilities identified in Part A, Section 4.2.
Response: Thank you for your comments. These comments are not relative to the non-binding poll of the VRFs and VSLs for PRC-005. Please see our response to the same comments on the proposed standard provided elsewhere in this report.		
Beaches Energy Services (1)	Non-binding Poll Comment	We believe that there is an unnecessary expansion of the scope of equipment covered by this standard into the distribution system related to UVLS and UFLS. Currently, PRC-005-1 includes batteries, instrument transformers, DC control circuitry and communications in addition to the relays for BES protection systems. PRC-008 (UFLS) and PRC-011 (UVLS) are ambiguous as to whether non-relay components are included in those standards. The new PRC-005-2 includes these non-relay components into UFLS and UVLS. The problem is, for UFLS and UVLS, these non-relay components are mostly distribution class equipment; hence, the result of this version 2 standard will be inclusion of most distribution class protection system components into PRC-005-2. This is a huge expansion of the scope of equipment covered by the standard with negligible benefit to BES reliability. We agree wholeheartedly with the inclusion of non-relay components for BES Protection Systems. It is critical

Organization	Yes or No	Question 3 Comment
		that BES Protection Systems work and clear the fault (e.g., on > 100 kV Facilities). However, UFLS and UVLS are quite different. For an event requiring UFLS and UVLS operation, there are many, e.g., hundreds and possibly thousands of relays, that operate to shed load automatically and if a small percentage of those do not operate as expected, the impact is minimal. So, it is not important for BES reliability to include non-relay components of UFLS and UVLS in the PRC-005-2 standard. In addition, testing of protection systems on distribution circuits is difficult for distribution circuits that are radial in nature. For instance, testing trip coils of distribution breakers will likely result in service interruption to customers on that distribution circuit in order to test the breaker or to perform break-before-make switching on the distribution system often required to manage maximum available fault current on the distribution system for worker safety, etc.. Hence, the standard would be sacrificing customer service quality for an infinitesimal increase in BES reliability. In addition, non-relay protection components operate much more frequently on distribution circuits than on Transmission Facilities due to more frequent failures due to trees, animals
Response: Thank you for your comments. These comments are not relative to the non-binding poll of the VRFs and VSLs for PRC-005. Please see our response to the same comments on the proposed standard provided elsewhere in this report.		
City of Green Cove Springs (3)	Non-binding Poll Comment	GCS believes that there is an unnecessary expansion of the scope of equipment covered by this standard into the distribution system related to UVLS and UFLS. Currently, PRC-005-1 includes batteries, instrument transformers, DC control circuitry and communications in addition to the relays for BES protection systems. PRC-008 (UFLS) and PRC-011 (UVLS) are ambiguous as to whether non-relay components are included in those standards. The new PRC-005-2 includes these non-relay components into UFLS and UVLS. The problem is, for UFLS and UVLS, these non-relay components are mostly distribution class equipment; hence, the result of this version 2 standard will be inclusion of most distribution class protection system components into PRC-005-2. This is a huge expansion of the scope of equipment covered by the standard with negligible benefit to BES reliability. GCS agrees wholeheartedly with the inclusion of non-relay components for BES Protection Systems. It is critical that BES Protection Systems work and clear the fault (e.g., on > 100 kV Facilities). However, UFLS and UVLS are quite different. For an event requiring UFLS and UVLS operation, there are many, e.g., hundreds and possibly thousands of relays, that operate to shed load automatically and if a small percentage of those do not operate as expected, the impact is minimal. So, it is not important for BES reliability to include non-relay components of UFLS and UVLS in the PRC-005-2 standard. In addition, testing of protection systems on distribution circuits is difficult for distribution circuits that are radial in nature. For instance, testing trip coils of a distribution breakers will likely results in service interruption to customers on that distribution circuit in order to test the breaker or to perform break-

Organization	Yes or No	Question 3 Comment
		before-make switching on the distribution system often required to manage maximum available fault current on the distribution system for worker safety, etc.. Hence, the standard would be sacrificing customer service quality for an infinitesimal increase in BES reliability. In addition, non-relay protection components operate much more frequently on distribution circuits than on transmission Facilities due to more frequent failures due to trees, animals, lightning, traffic accidents, etc., and have much less of a need for testing since they are operationally tested. As another comment, station service transformers are not BES Elements and should not be part of the Applicability - they are radial serving only load.
Response: Thank you for your comments. These comments are not relative to the non-binding poll of the VRFs and VSLs for PRC-005. Please see our response to the same comments on the proposed standard provided elsewhere in this report.		
ReliabilityFirst	Non-binding Poll Comment	ReliabilityFirst agrees with the VRFs but votes negative on the VSLs for the following reasons: 1. VSL for R1 a. Part 1.3 is not mentioned in the VSLs b. The VSLs should start off with the phrase “The responsible entities PSMP…” c. For the VSLs dealing with Part 1.2, the term “or a combination” should be added as one of the methods for maintenance. d. The last VSL under the Severe category should reference Part 1.2 e. The VSLs for Part 1.1 should be gradated similar to Part 1.2 (e.g. what VSL does an entity fall under if they failed to address two component types included in the definition of ‘Protection System’?) 2. VSL for R2 a. To be consistent with Requirement 2, the VSLs should start off with the phrase “The responsible entity uses performance-based maintenance intervals in its PSMP, but…” b. The first VSL under the “Lower” category is a duplicate of the VSL under the “High” category c. The third VSL under the “Lower” category has language stating “or containing different manufacturers.” Neither R2 nor Attachment A mentions this language. This is a violation of the FERC Guideline 3: “Violation Severity Level Assignment Should Be Consistent with the Corresponding Requirement” d. Recommend that the VSL regarding entities that “maintained a segment with less than X amount of components” should be a binary “Severe” VSL 3. VSL for R3 a. The VSLs should start off with the phrase “The responsible entity…”

Organization	Yes or No	Question 3 Comment
		b. R3 does not require an entity to "…complete scheduled program…" This is a violation of the FERC Guideline 3: "Violation Severity Level Assignment Should Be Consistent with the Corresponding Requirement" c. The "implement and follow its PSMP" language in R3 is not mentioned in the VSLs for R3. Recommend including this language in the VSLs for R3

Response: Thank you for your comments.

1.

a. Part 1.3 has been added to the R1 High VSL.

b. The R1 Lower, Medium, and Higher VSLs have been modified as you suggest.

c. The R1 Lower, Medium, and Severe VSLs have been modified as you suggest.

d. The R1 Severe VSL has been modified as you suggest

e. The R1 Moderate and High VSLs have been modified to add graduated VSLs for part 1.1.

2.

a. The R2 VSLs have been modified as you suggest.

b. Thank you for catching this. The High VSL has been modified from three years to four years.

c. This portion of the R2 Lower VSL has been removed, making the VSL for this portion of R2 binary (with only a Severe VSL).

d. The VSL for R2 has been modified as you suggest.

3.

a. The R3 VSLs have been modified as you suggest.

b. The R3 VSLs have been modified by replacing "complete" with "implement and follow" in consideration of your comment.

c. The R3 VSLs have been modified by replacing "complete" with "implement and follow" in consideration of your comment.

4. The SDT has incorporated the FAQ document into the "Supplementary Reference" document and has provided the combined document as support for the Requirements within the standard. Do you have any specific suggestions for further improvements?

Summary Consideration: The commenters were generally supportive of the combination of documents.

Several comments were offered, repeating previous questions regarding the enforceability of this document, and the SDT repeated previous responses explaining the status of this document as a supporting reference – reference documents have no enforceability.

A variety of suggestions were offered regarding additional information for the document, which largely resulted in modifications to the Supplementary Reference document. One specific suggestion of note (resulting in additional discussion within the document) requested a FAQ regarding "Calendar Year".

Several commenters posed questions regarding "grace periods" and "PSMPs established by entities that are more stringent than the requirements within the standard". No additional changes were made due to these questions, but the SDT further explained previous guidance on these issues within the responses. Entities are always allowed to implement practices that are more stringent than those identified in a standard.

Organization	Yes or No	Question 4 Comment
Manitoba Hydro		A red line was not provided making this document difficult to review. We suggest that a redline of this document be posted.
Response: Thank you for your comments. A red-line was not provided because of overall extensive changes, resulting from merging of the previous Supplementary Reference Document and FAQ; the entire document would have been red-line. The next posting will include a red-lined document, as well as the "clean" document.		
U.S. Bureau of Reclamation (5)	Ballot Comment - Affirmative	1. The reference material provides a significant insight into the intent of the proposed changes to the standard. In some cases an interpretation is provided which is not supported by the explicit interpretation of the standard text. The SDT is encouraged to either attach the reference material to the standard or add relevant sections to standard as Background. The Background section could reference the Supplemental Reference & FAQ. 2. The reference material provides more detail indicating that "Voltage & Current Sensing Device circuit input

Organization	Yes or No	Question 4 Comment
		connections to the protection system relays can be verified by (but not limited to) comparison of measured values on live circuits or by using test currents and voltages on equipment out of service for maintenance. . . . . The values should be verified to be as expected, (phase value and phase relationships are both equally important to verify).” This interpretation is not consistent with the text of the standard and would suggest that it be incorporated into Table 1-3. 3. When protective equipment is replaced, the reference information indicates that the information associated with the original equipment must be retained to show compliance with the standard until the performance with the new equipment can be established. This is not stated in the Measurements and should be added if the expectation exists.
Response: Thank you for your comments. 1. This standard is not being developed in a “results-based” format. Attaching the extra document as you suggest would make the supporting information within the FAQ and Supplementary Reference part of the standard, and this would add extensive and unnecessary prescription to the standard. As you suggest the reference material is listed within the Standard (Section F – Supplemental Reference Document). The next revision will likely resemble your suggestion. 2. Details within the Supplemental Reference Document are provided as examples and should not be construed as limitations or additional requirements. The intent of the supplementary information is to spur insight into possible means of satisfying requirements and is not intended to promote a single technical method of accomplishing tasks. 3. M1 states “Each Transmission Owner, Generator Owner, and Distribution Provider shall have evidence that it has implemented the Protection System Maintenance Program and…” Documenting the implementation of the PSMP certainly requires evidence that maintenance was performed at the prescribed intervals and the data retention requirements state that evidence of the two most recent performances of each distinct maintenance activity be retained. Also, please see the NERC Compliance Process Bulletin #2011-001 (“Data Retention Requirements”) for similar guidance.		
Ameren Services (1)	Ballot Comment – Affirmative	1. Omit retention of maintenance records for replaced equipment. Supplement FAQ 12.1 on page 51 final sentence states that documentation for replaced equipment must be retained to prove the interval of its maintenance. We oppose this because: the replaced equipment is gone and has no impact on BES reliability; and such retention clutters the data base and could cause confusion. For example, it could result in saving lead acid battery load test data beyond the life of its replacement. Since BES Element protection is the objective, we suggest a compromise of keeping the evidences of last test for the removed equipment and using that with the equivalent function replacement equipment commissioning or in-service date to prove interval. 2. In Supplement examples on pp 22-23, replace “Instrumentation transformers” with “Verify that current and voltage signal values are provided to the protective relays” to be consistent with Table 1-3. 3. Remove “Reverse power relays” from the sample list of generator devices in Supplement p31 because reverse power relays are applied for mechanical protection of the prime mover, not electrical protection of the

Organization	Yes or No	Question 4 Comment
		generator. 4. Revise Supplement Figure 1 & 2 Legend p83 to align with Draft 4 (a) state "Protective relays designed to provide protection for BES Element(s)" (b) state "Current and voltage signals provided to the protective relays". 5. Please add a Performance-Based maintenance example for control circuitry, and /or voltage and current sensing.
Response: Thank you for your comments. 1. This cited reference in the Supplementary Reference Document is present to maintain consistent evidence that maintenance was performed within prescribed intervals. Please see the NERC Compliance Process Bulletin #2011-001 ("Data Retention Requirements") for similar guidance. 2. Thank you, the change has been made. 3. The commenter is correct that it is the prime mover that is protected by the Reverse Power relay; however the Standard considers relays (such as Reverse Power relays) that sense voltage and current are within the scope. Furthermore, Part 4.2.5.1 (Applicability) of the Standard includes Protection Systems for generator Facilities that are part of the BES including Protection Systems that act to trip the generator either directly or via generator lockout or auxiliary tripping relays. 4. The column marked Component of Protection System closely aligns with the definition of Protection System as approved by the NERC Board of Trustees and is included within the Standard itself. The next column ("Includes") is more explanatory in nature and is intended to give insight on the SDT's intent. 5. Thank you, the requested changes have been made. Additional Q&A (including one for control circuitry and one for voltage and current sensing devices) have been added to Section 9.2.		
National Grid (1)	Ballot Comment - Affirmative	National Grid suggests that FAQ be added: 1. Regarding Table 2 in the standard, Does a fail-safe "form b" contact that is alarmed to a 24/7 operation center classify as an alarm path with monitoring? 2. Please add a clarification as part of the FAQ document that defines whether the control circuitry and trip coil of a non-BES breaker, tripped via a BES protection component, must be tested per Table 1.5.
Response: Thank you for your comments. 1. Thank you, the change has been made. An additional Q&A has been added to Section 15.6.1. 2. Thank you, the change has been made. An additional Q&A has been added to Section 15.3.1.		

Organization	Yes or No	Question 4 Comment
New York Power Authority (1)	Ballot Comment - Affirmative	Comments: We suggest that FAQ be added: 1. Regarding Table 2 in the standard, Does a fail-safe "form b" contact that is alarmed to a 24/7 operation center classify as an alarm path with monitoring? 2. Please add a clarification as part of the FAQ document that defines whether the control circuitry and trip coil of a non-BES breaker, tripped via a BES protection component, must be tested per Table 1.5.
Response: Thank you for your comments. 1. Thank you, the change has been made. An additional Q&A has been added to Section 15.6.1. 2. Thank you, the change has been made. An additional Q&A has been added to Section 15.3.1.		
Muscatine Power & Water (3)	Ballot Comment - Affirmative	In the "Supplemental Reference and FAQ" document on page 65 there is one area of concern. In paragraph 4 "…the type of test equipment used to establish the baseline must be used for any future trending of the cells internal ohmic measurements because of variances in test equipment and the type of ohmic measurement used by different manufacturer's equipment." While MP&W understands the importance of creating a valid baseline, it is disingenuous to expect the test equipment to be the same as the manufacturer's test equipment. For that matter, it would be highly unlikely the same test equipment would be used over the life of the battery. The expected life of a battery may be in excess of 15 years in most cases and it would not be probable to expect that the type of test equipment is not going to change during this period. MP&W suggests changing the wording to read that CONSISTENT test equipment should be used to provide consistent/comparable results.
Response: Thank you for your comments, the change has been made. The statements concerning types of equipment have been changed per your suggestion to reflect consistent test data as opposed to exactly the same piece of test equipment.		
Florida Municipal Power Agency (4) (5) (6) Florida Municipal Power Pool (6)	Ballot Comment - Negative	1. Examples #1, #2 and #3 in Section 7.1 of the Supplementary Reference all indicate that it is a requirement to "verify all paths of control and trip circuits" every 12 years. As stated, there would be circuits included in the testing requirement that the SDT did not mean to include in the scope of the Standard (e.g., SCADA closing circuit.) The statements in the illustrative examples should be changed to "verify all paths in the control circuitry associated with protective functions through the trip coil(s) of the circuit breakers or other interrupting devices" to be in line with the definition of a Protection System. 2. Section 15.5 of the Supplementary Reference Document states: "It was the intent of this Standard to require that a test be made of any communications-assisted trip scheme regardless of the vintage of the technology. The essential element is that the tripping (or blocking) occurs locally when the remote action

Organization	Yes or No	Question 4 Comment
		has been asserted; or that the tripping (or blocking) occurs remotely when the local action is asserted". The SDT should reword this statement recognizing that tests performed on communication systems may not be performed at the same time an entity chooses to perform trip tests on the associated breaker(s). The notion of "overlapping" can be applied, for instance, by taking an outage on one relay set in a fully redundant system, initiating a trip signal from the remote end and observing the trip signal locally. All remaining portions in the local communication-assisted trip paths can then be tested when the local line panel is taken out of service for maintenance.
Response: Thank you for your comments. 1. Thank you, the change has been made. 2. Thank you, the change has been made.		
ITC	No	We agree with the combination of the two. One document with the FAQ's grouped with the supplemental topics makes it easier to review the whole topic.
Response: Thank you for your comments.		
Central Lincoln	No	The first FAQ under 2.3.1 is incorrect, referencing a FERC informational filing. Included in the filing was a WECC test that was never approved by the WECC board and is not being used. Using this document as suggested will get WECC entities into trouble.
Response: Thank you for your comments. There are presently regional differences allowed that may cease to exist once the BES is redefined. The SDT for the BES Definition (Project 2010-17) is charged with developing a continent-wide BES definition; however, this FERC informational filing is on the public record, and was part of the basis for FERC Order 743.		
Tampa Electric Company	No	Tampa Electric requests further differentiation between BES protection elements and UFLS equipment.
Response: Thank you for your comments. UFLS equipment is presently covered under PRC-008. PRC-005-2 will cover all Protection Systems components including components used for UFLS. The Standard addresses UFLS and UVLS to the degree that they are installed per NERC Standards, even though entities may choose to install them on distribution systems. This is an intentional difference between UFLS/UVLS and the remainder of the Protection Systems addressed within the Standard, because of the distributed nature of UFLS/UVLS and because these devices are usually tripping non-BES system elements.		
Electric Market Policy	No	
Santee Cooper	No	

Organization	Yes or No	Question 4 Comment
SPP reliability standard development Team	No	
Tennessee Valley Authority	No	
Imperial Irrigation District	No	
MRO's NERC Standards Review Subcommittee	No	
The Detroit Edison Company	No	
NextEra Energy	No	
Western Electricity Coordinating Council	No	
Ingleside Cogeneration LP	No	
Farmington Electric Utility System	No	
Illinois Municipal Electric Agency	No	
Shermco Industries	No	
Dominion Virginia Power	No	
American Electric Power	No	
CPS Energy	No	
Indeck Energy Services	No	
MidAmerican Energy Company	No	

Organization	Yes or No	Question 4 Comment
NIPSCO	Yes	We used the FAQ Supplemental Reference while reviewing this draft standard and found it useful.
Response: Thank you for your comments.		
FirstEnergy	Yes	1. We do not agree with the following wording on page 37 of the reference document: (1) "If your PSMP (plan) requires more activities then you must perform and document to this higher standard." and (2) "If your PSMP (plan) requires activities more often than the Tables maximum then you must perform and document those activities to your more stringent standard." 2. We continue to believe that the auditor is required to audit to the standard. If the standard requires maintenance intervals every 6 years, this is what the auditor should verify. This was also verified in the recent NERC Workshop at which it was confirmed that "auditors must audit to the standard". To this end, we also suggest changes to Requirement R3 as explained in our comments in Question 5.
Response: Thank you for your comments. 1. The SDT respectfully disagrees with the commenter. R1 of the Standard states that "… shall establish a Protection System Maintenance Program (PSMP)…, and R3 states that "… shall implement and follow its (PSMP)…" Therefore, if an entity has a more stringent PSMP then they must follow their own PSMP. An example of this might be a case that has an entity with Performance Based Maintenance; this entity could find time intervals between maintenance activities that are more frequent than are laid out in the Tables. This entity must follow their PSMP. Another example might be an entity that requires CT Saturation tests every 10 years; this is a more stringent requirement than is contained within the minimum maintenance activities of the Standard. Neither the SDT nor any auditor has any idea why an entity may require more stringent requirements of themselves than the Standard requirements. Even under the present PRC-005-1 an auditor audits to the entity's PSMP; a case in point is if an entity PSMP requires relay testing with simulated fault values of voltage and current every year then they are audited to that requirement (even though PRC-005-1 specifically does not require any particular relay testing and certainly has no time intervals stated). Please note that FERC Order 693 directs NERC to establish maximum allowable intervals not minimum intervals, and the entity's program must, at a minimum, conform to those intervals. 2. The SDT has set no requirements that an entity have a more stringent PSMP than the minimum requirements set out in the Standard, only that any PSMP meet the minimums laid out within the Standard. But, should an entity have a PSMP that is more stringent then, according to R3, they must maintain to their own more stringent PSMP.		
BGE	Yes	1. The supplementary reference on page 30, under the question beginning "Our maintenance plan requires" states that an entity is "out of compliance" if maintenance occurs at a time longer than that specified in the entity's plan, even if that maintenance occurred at less than the maximum interval in PRC-005-2. But then on page 35, under the question, "How do I achieve a grace period without being out of compliance" provides an example of scheduling maintenance at four year intervals in order to manage scheduling complexities and assure completion in less in less than the maximum time of six calendar years. This is

Organization	Yes or No	Question 4 Comment
		conflicting advice. The FAQ /supplementary reference should be revised so that it does imply that an entity is out-of-compliance by performing maintenance more frequently than required. Avoiding compliance risk is one reason to do this, but there are other valid motives not directly related to reliable protection system performance. 2. Testing of PT's and CT's (12 year max) is non invasive and convenient to schedule at the same time as relays (6 year max) just to keep procedures consistent and reduce program administration. Testing of ties to other TOs or GOs may have to be scheduled more frequently than preferred in order to synchronize schedules.
Response: Thank you for your comments. 1. There is no conflict, the first commenter-cited PSMP example has language that has no grace-period built in, and the second commenter-cited PSMP example has language with a built-in grace period. Both cited examples are measurable to a time limit between testing activities. 2. Your observations are correct; an entity may choose to perform activities more often than is specified in the Standard. For that matter, an entity may choose to perform activities more often than their own PSMP; the entity simply cannot exceed their own PSMP intervals which in turn cannot exceed the intervals in the Standard.		
Pepco Holdings Inc	Yes	The Supplementary Reference and FAQ should be an attachment to the standard (Appendix A) and not just referenced. If not attached it will not be readily accessible to those that will be using the standard.
Response: Thank you for your comments. The Supplementary Reference and FAQ is referenced in Section F of the standard (which was on Page 9 of the clean version of the recent posting), in accordance with the Standards Development Process, and will be posted with the standard as "Reference Materials".		
GDS Associates	Yes	The standard should include a footnote indicating this document as reference
Response: Thank you for your comments. This document is addressed within the Standard as a reference document by listing it in Section F (which was on Page 9 of the clean version of the recent posting), in accordance with the Standards Development Process.		
ExxonMobil Research and Engineering	Yes	The SDT should provide notes that reference the sources used for developing the maximum maintenance intervals utilized in the time-based program, and provide a technical explanation as to why they have not provided a tolerance band for use with the time-based program. What is the increase in risk owned by an entity when a protective device is tested at the 6 year and 30 day mark instead of the 6 year mark?
Response: Thank you for your comments. The SDT was tasked to create a standard with maximum time intervals between maintenance activities. Thus the task, in and of itself, sets the limit as absolute. Where the intervals were set at six years (or any interval for that matter), there was no assessment of risk beyond the time interval chosen as the absolute. The question always would arise as "Why not an additional thirty days after that?" The reference material cites methodology		

Organization	Yes or No	Question 4 Comment
to determine initial time intervals. The SDT took further care to try to align the initial maintenance intervals with common maintenance schedules like plant outages and other published guidelines. Please note that the Tables refer to "Calendar Year" for the intervals referenced in the comment; the noted concern would only be relevant if the entity actually completes the activity at the very end of the calendar year.		
US Army Corps of Engineers	Yes	1. The reference material provides a significant insight into the intent of the proposed changes to the standard. In some cases an interpretation is provided which is not supported by the explicit interpretation of the standard text. The SDT is encouraged to either attach the reference material to the standard or add relevant sections to standard as Background. The Background section could reference the Supplemental Reference & FAQ. 2. The reference material provides more detail indicating that "Voltage & Current Sensing Device circuit input connections to the protection system relays can be verified by (but not limited to) comparison of measured values on live circuits or by using test currents and voltages on equipment out of service for maintenance. . . . . The values should be verified to be as expected, (phase value and phase relationships are both equally important to verify)." This interpretation is not consistent with the text of the standard and would suggest that it be incorporated into Table 1-3.
Response: Thank you for your comments. 1. This standard is not being developed in a "results-based" format. As you suggest the reference material is listed within the Standard (Section F – Supplemental Reference Document). The next revision will likely resemble your suggestion. 2. Details within the Supplemental Reference Document are provided as examples and should not be construed as limitations or additional requirements. The intent of the supplementary information is to spur insight into possible means of satisfying requirements and is not intended to promote a single technical method of accomplishing tasks.		
Luminant	Yes	The document was valuable in understanding PRC-005-2 by providing clarification using practical protective relay system examples. Below are two comments for further improvement. 1. It would be beneficial if the document could provide additional information for relaying in the high-voltage switchyard (transmission owned) - power plant (generation owned) interface. While Figures 1 and 2 are typical generation and transmission relay diagrams, it would be helpful if protective relays typically used in the interface also be included. For example, a transmission bus differential would remove a generator from service by tripping the generator lockout. 2. Figures 1 and 2 refer to a "Figure 1 and 2 Legend" table which provides additional information on qualifications for relay components. Should a footnote be used to point toward Reference 1 (Protective

Organization	Yes or No	Question 4 Comment
		System Maintenance: A Technical Reference) located in Section 16?
Response: Thank you for your comments. 1. There are so many variations possible that it is impractical to try to capture all configurations on a single picture or in a single document. However, for the cited example - a transmission bus Protection System would be included. All five of the Protection System component types would fall within the Standard including the trip paths and the electrical test requirements of the generator lockout device. 2. Thank you, a link has been provided to the references.		
MISO Standards Collaborators	Yes	The additional documentation seems to be quite large, and the additional content seems to go far beyond what is necessary for the PRC-005-2 standard. We recommend the SDT lessen the amount of content provided in the "Supplementary Reference" document.
Response: Thank you for your comments. Details within the Supplemental Reference Document are provided as examples and should not be construed as limitations or additional requirements. The intent of the supplementary information is to spur insight into possible means of satisfying requirements and is not intended to promote a single technical method of accomplishing tasks.		
Northeast Power Coordinating Council	Yes	Suggest that to FAQ be added: 1. Regarding Table 2 in the standard, does a fail-safe "form" contact that is alarmed to a 24/7 operation center qualify as an alarm path with monitoring? 2. Add a clarification as part of the FAQ document that defines whether the control circuitry and trip coil of a non-BES breaker, tripped via a BES protection component, must be tested as per Table 1.5.
Response: Thank you for your comments. 1. Thank you, the change has been made. An additional Q&A has been added to Section 15.6.1. 2. Thank you, the change has been made. An additional Q&A has been added to Section 15.3.1.		
Georgia Transmission Corporation	Yes	See comments for item 1 and continue clarification where we could include high side or distributed interrupting devices, exchange nomenclature removing distribution breaker and adding distributed interrupting device or non-BES equipment.
Response: Thank you for your comments. Circuit interrupting devices that only participate in a UFLS or UVLS scheme are excluded from the tripping requirement, but not from the circuit test requirements. The "non-BES equipment interruption device" phrase has been inserted as suggested.		

Organization	Yes or No	Question 4 Comment
PNGC Comment Group	Yes	Section 9.2 (copied below) indicates that small entities can utilize Performance-Based PSMP if they aggregate with other entities. Does this section indicate that only a parent entity with individually owned components can aggregate, or can independent entities under a G&T aggregate? In other words, individual DP/LSE/TOs with different audits. Can they aggregate under a common PSMP for performance based maintenance? 9.2 Frequently Asked Questions: I'm a small entity and cannot aggregate a population of Protection System components to establish a segment required for a Performance-Based Protection System Maintenance Program. How can I utilize that opportunity? Multiple asset owning entities may aggregate their individually owned populations of individual Protection System components to create a segment that crosses ownership boundaries. All entities participating in a joint program should have a single documented joint management process, with consistent Protection System Maintenance Programs (practices, maintenance intervals and criteria), for which the multiple owners are individually responsible with respect to the requirements of the Standard. The requirements established for performance-based maintenance must be met for the overall aggregated program on an ongoing basis. The aggregated population should reflect all factors that affect consistent performance across the population, including any relevant environmental factors such as geography, power-plant vs. substation, and weather conditions.
Response: Thank you for your comments. Two entities in such a shared program must have populations of components that can be aggregated and the PSMP for those components are the same between the two entities. Thus the combined entities can show total populations, total numbers of components tested and total failures found. The combined entities would thus be forced to follow the same intervals, test procedures and statistical analysis. There would have to be cooperation between entities but in the end the outcome would be the same as if the PBM process were applied to a single entity. There is no inherent advantage or disadvantage to multiple entities cooperating in such a manner. The SDT intends that small entities with small populations of equipment have the same access to PBM as the larger entities.		
FHEC	Yes	It is unclear what compliance obligations may be created or clarified with the FAQ. It is a good explanatory document and a helpful reference, but the Standard should speak for itself as it relates to what it takes to achieve compliance.
Response: Thank you for your comments. The Standard is the only "mandatory and enforceable" document. Details within the Supplemental Reference Document are provided as examples and should not be construed as limitations or additional requirements. The SDT intends that it be posted as a Reference Document, accompanying the standard. As established in SDT Guidelines, the Standard is to be a terse statement of requirements, etc, and is not to include explanatory information like that included in the Supplementary Reference Document. The Supplementary Reference FAQ will be revised in the course of the revision process of the standard.		
Western Area Power	Yes	Can the SDT add a better definition or clarification of "Calendar Year" as it pertains to PRC-005-2 and provide

Organization	Yes or No	Question 4 Comment
Administration		examples or parameters of Compliance with the Standard requirements and tables? Calendar Year is explained in various details within Pages 35-Pages 37 of the Supplementary Reference and FAQ. This important attribute of a TBM or TBM/CBM combination program is not easily found in the Table of Contents or section sub-headings.
Response: Thank you for your comments. Per your suggestion, a "What is a Calendar Year?" Q&A has been added to the front end of Section 7.1.		
Duke Energy	Yes	Along the lines of what we have suggested in our comment to Question #1 above, we believe it would make compliance more certain if selected language from the Supplementary reference could be incorporated into the standard, either directly in requirements, or in footnotes.
Response: Thank you for your comments. The addition that you suggest is properly considered application guidance; the SDT has been advised that this information is not to be included within the standard, and that it is appropriately included in separate reference materials.		
Ameren	Yes	1. Comments: Supplement FAQ 12.1 on page 51 final sentence states that documentation for replaced equipment must be retained to prove the interval of its maintenance. We oppose this because: the replaced equipment is gone and has no impact on BES reliability; and such retention clutters the data base and could cause confusion. For example, it could result in saving lead acid battery load test data beyond the life of its replacement. Since BES Element protection is the objective, we suggest a compromise of keeping the evidences of last test for the removed equipment and using that with the equivalent function replacement equipment commissioning or in-service date to prove interval. 2. Clarify p17 Table 1-4(e) interval meaning. We think this means we need to verify the Station dc supply voltage on 12 calendar year interval if unmonitored, or no periodic maintenance if monitored as stated. 3. In Supplement examples on pp 22-23, replace "Instrumentation transformers" with "Verify that current and voltage signal values are provided to the protective relays" to be consistent with Table 1-3. 4. Remove "Reverse power relays" from the sample list of generator devices in Supplement p31 because reverse power relays are applied for mechanical protection of the prime mover, not electrical protection of the generator. 5. Revise Supplement Figure 1 & 2 Legend p83 to align with Draft 4 (a) state "Protective relays designed to provide protection for BES Element(s)". (b) state "Current and voltage signals provided to the protective relays" 6. Please add a Performance-Based maintenance example for control circuitry, and /or voltage and current sensing.

Organization	Yes or No	Question 4 Comment
Response: Thank you for your comments. 1. This cited reference in the proposed Standard is present to maintain consistent evidence that maintenance was performed within prescribed intervals. 2. The SDT agrees. 3. Thank you, the change has been made 4. The commenter is correct that it is the prime mover that is protected by the Reverse Power relay, however the Standard considers relays (such as Reverse Power relays) that sense voltage and current as within the scope. Furthermore, Part 4.2.5.1 of the Standard states that Protection Systems for generator Facilities that are part of the BES including Protection Systems that act to trip the generator either directly or via generator lockout or auxiliary tripping relays 5. The column marked Component of Protection System closely aligns with the definition of Protection System as approved by the NERC Board of Trustees and is included within the Standard itself. The next column ("Includes") is more explanatory in nature and is intended to give insight on the SDT intent 6. Thank you, the changes have been made. Additional Q&A have been added to Section 9.2.		
Xcel Energy	Yes	1) On page 65, paragraph 4, of the "Supplemental reference and FAQ" document, it states:"the type of test equipment used to establish the baseline must be used for any future trending of the cells internal ohmic measurements because of variances in test equipment and the type of ohmic measurement used by different manufacturer's equipment." While we understand the importance of creating a baseline, it is not feasible to expect the test equipment be the same as the manufacturer's test equipment or even the same test equipment over the life of the battery. The expected life of a battery may be in excess of 20 years and it is not feasible to expect that the type of test equipment will not change during this period.2) A FAQ to clarify in scope protection systems for variable energy resource facilities (wind, solar, etc) would be very helpful. 2) Does paragraph 4.2.5.3 "Facilities" imply that the only protection system associated with a wind farm that is considered in scope for PRC-005-2 is that for the aggregating transformer? If other protection systems associated with a wind farm are in scope, please clarify which systems would be in scope for PRC-005-2. For example, a typical wind farm in our system might have 30-33, 1.5MVA windmills connected to one 34.5 KV collecting feeder circuit for a total of roughly 50 MVA per collecting feeder. 4 of these 50 MVA collecting feeders are tied via circuit breakers to a low side 34.5 KV bus which in turn is connected via a low side breaker to aggregating step up transformer which then connects to the BES transmission system. Obviously per paragraph 4.2.5.3, the protection system for the aggregating step up transformer is in scope. What about the protection system for the transformer low side 34.5 KV breaker - serving 200 MVA of aggregate generation? What about the protection system of each individual 34.5 KV aggregating

Organization	Yes or No	Question 4 Comment
		feeder - 50 MVA of aggregate generation? What about the"protection system" for each individual 1.5 MVA windmill? An FAQ on this topic would be very helpful.
Response: Thank you for your comments. 1. Thank you for your suggestion; the paragraph cited has been changed. 2. Clause 4.2.5.3 states specifically that the Protection Systems on the aggregating transformer are included. The SDT has not specifically included other equipment, but, depending on what, specifically, is defined to be BES for these facilities, either within current Regional definitions or within the emerging NERC definition, other equipment may be drawn in.		
Alliant Energy	Yes	

5. If you have any other comments on this Standard that you have not already provided in response to the prior questions, please provide them here.

Summary Consideration: Several commenters were concerned that an entity has to be "perfect" in order to be compliant; the SDT responded that NERC Standards currently allow no provision for any degree of non-performance relative to the requirements.

Several commenters continued to insist that "grace periods" should be allowed. The SDT continued to respond that grace periods would not be measurable.

Several comments were offered, suggesting that PRC-005-2 needs to be consistent with the interpretation in Project 2009-17, now implemented as PRC-005-1a, and the SDT modified Applicability 4.2.1 for better consistency with the interpretation 4.2.1 (Protection Systems that are installed for the purpose of detecting faults on BES Elements (lines, buses, transformers, etc).

Many comments were offered objecting to the 3-calendar-month intervals for station dc supply and communications systems, and suggesting that a 3-calendar-month interval requires entities to schedule these activities for 2-calendar-months in order to assure compliance. The SDT did not modify the standard in response to these comments, and responded that the intervals were appropriate, and that entities should be able to assure compliance on a 3-calendar-month schedule by using program oversight. The "Supplementary Reference and FAQ" document was augmented with additional explanatory text.

Several comments were offered questioning various aspects of Applicability 4.2.5.4 (generation auxiliary transformers). No changes were made in response to these comments, and responses were offered illustrating why these transformers are included.

Many (essentially identical) comments were offered, questioning the propriety of including distribution system Protection Systems, almost all related to UFLS/UVLS. The SDT explained that these Protection Systems are appropriate to be included for consistency with legacy standards PRC-008, PRC-011, and PRC-017, and noted that their inclusion is consistent with Section 202 of the NERC Rules of Procedure.

Several comments were offered, objecting to the 6-calendar-year interval for lockout and auxiliary relays. The SDT declined to adopt the requested changes, and noted that these "electromechanical" devices with "moving parts" share failure mechanisms with electromechanical protective relays and that the intervals should be identical.

Several comments were offered regarding Maintenance Correctable Issues, and resulted in modifying this definition to be "…such that the deficiency cannot be corrected during the performance of the maintenance activity …"

Assorted additional comments were offered by individual commenters (most of them similar to comments on previous postings), which resulted in responses similar to those offered during previous posting periods.

Organization	Yes or No	Question 5 Comment
Consolidated Edison Co. of New York (1) (3) (5)	Ballot Comment - Affirmative	We recommend that the drafting team recognize that a "fail safe" or "self-reporting" alarm design serves as an acceptable alternative to periodic testing. This "fail safe" or "self-reporting" alarm design is equivalent to continuous testing the alarm. When the alarm circuit fails the alarm is set to "alarm on" and automatically notifies the control center, initiating a corrective action.
Response: Thank you for your comments. The application discussed seems to the SDT to be an effective method of "monitoring the monitoring circuit". (See Table 2, last row with heading "Alarm Path with monitoring.")		
Ameren Services (1)	Ballot Comment - Affirmative	(1) Need some tolerance – require 99% of components to meet R3. Measure M3 on page 5 should apply to 99% of the components. "Each … shall have evidence that it has implemented the Protection System Maintenance Program for 99% of its components and initiated…." PRC-005-2 unrealistically mandates perfection without providing technical justification. A basic premise of engineering is to allow for reasonable tolerances, even Six Sigma allows for defects. Requiring perfection may well harm reliability in that valuable resources will be distracted from other duties. (2) Define BES perimeter in accordance with Project 2009-17 Interpretation. Facilities Section 4.2.1 "or designed to provide protection for the BES" needs to be clarified so that it incorporates the latest Project 2009-17 interpretation. The industry has deliberated and reached a conclusion that provides a meaningful and appropriate border for the transmission Protection System; this needs to be acknowledged in PRC-005-2 and carried forward. The BOT adopted this 2/17/2011. (3) Battery inspection every 4 months is sufficient. IEEE battery maintenance standards call for quarterly inspections. These are targets, though, not maximums. An entity wishing to avoid non-compliance for an interval that might extend past three calendar months due to storms and outages must set a target interval of two months thereby increasing the number of inspections each year by half again. This is unnecessarily frequent. We suggest changing the maximum interval for battery inspections to 4 calendar months. For consistency, we also suggest that all intervals expressed as 3 calendar months be changed to 4 calendar months.
Response: Thank you for your comments. 1. The NERC criteria for VSLs do not currently permit them to allow some level of non-performance without being in violation. 2. The referenced interpretation relates to a quasi-definition of "transmission Protection System", and in the context of the approved PRC-004-1 and PRC-005-1, presents a consistent context for this term. However, the interpretation was constrained to not introducing any requirements or applicability not already included within the approved standards. PRC-005-2 does not use this term, and expands upon the applicability in the interpretation to address what seems to the SDT to be an appropriate applicability for PRC-005-2. The applicability of the interpretation to PRC-004-1 is not affected by PRC-005-2. 3. The activities involved in the 3-calendar-month maintenance intervals all relate to inspection-type activities of unmonitored battery systems. The SDT believes		

Organization	Yes or No	Question 5 Comment
that an entity may schedule activities for a 3-calendar-month interval without a "grace period" if adequate program oversight is exercised, and disagrees that the intervals should be extended. See Section 7.1 of the "PRC-005-2 Protection System Maintenance Supplementary Reference & FAQ" for a discussion about "calendar month". Basically every "3 Calendar Months" means to add 3 months from the last time the activity was performed.		
Xcel Energy		1) Regarding "Facilities" paragraph 4.2.5, we are in agreement with the elimination from scope of system connected station service transformers for those plants that are normally fed from a generator connected station service transformers. However, in the cases where a plant does not have a generator connected station service transformer such that it is normally fed from a system connected station service transformer, is it still the drafting team's intent to exclude the protection systems for these system connected auxiliary transformers from scope even when the loss of the normal (system connected) station service transformer will result in a trip of a BES generating facility? If the end result of the trip of the primary station service transformer is a trip of a BES generating facility, it would be more consistent to include the protection system for that transformer as in scope - whether it be connected to the system or to the generator. 2) We recommend the SDT consider an interval of 12 calendar years for the component in row 3, of Table 1-5 on page 19 of the standard. The maximum maintenance interval for "Electromechanical lockout and/or tripping devices which are directly in a trip path from the protective relay to the interrupting device trip coil" should be consistent with the "Unmonitored control circuit" interval which is 12 calendar years. In order to test the lockout relays, it may be necessary to take a bus outage (due to lack of redundancy and associated stability issues with delayed clearing). Increasing the frequency of bus outages (with associated lines or transformers) will also increase the amount of time that the BES is in a less intact system configuration. Increasing the time the BES is in a less intact system configuration also increases the probability of a low frequency, high impact event occurring. Therefore, the Maximum Maintenance Interval should be 12 years for lockout relays. We believe that, as written, the testing of "each" trip coil and the proposed maintenance interval for lockout testing will result in the increased amount of time that the BES is in a less intact system configuration. We hope that the SDT will consider these changes.
Response: Thank you for your comments. 1. The SDT does not intend that the system-connected station auxiliary transformers be included in the Applicability. The generator-connected station service transformers are often connected to the generator bus directly without an interposing breaker; thus, the Protection Systems on these transformers will trip the generator as discussed in 4.2.5.1. 2. The SDT believes that electromechanical devices share performance attributes (and failure modes) with electromechanical relays and need to be tested at similar intervals. Performance-Based maintenance is an option to increase the intervals if the performance of these devices supports those intervals.		
Northeast Power Coordinating Council, Inc. (10)	Ballot Comment -	A concern exists that an entity with a very strict PSMP with intervals that are much shorter than neighboring entities or the standard will rewrite their PSMP and loosen their requirements to allow postponed maintenance

Organization	Yes or No	Question 5 Comment
	Affirmative	up the maximum specified in the standard. This standard, as written penalizes non-adherence to more stringent and better PSMPs and may inadvertently driving entities to the least common denominator. I am hopeful that Phase 2 will address this issue.
Response: Thank you for your comments. The Standard is defining maximum allowable intervals and minimum acceptable activities for a PSMP. Entities are empowered to develop PSMPs that exceed these requirements if they determine such a PSMP to be necessary.		
GDS Associates		Requirement R1 1. Suggest changing the language in R1.2 to read "Identify which maintenance method such as the time-based, performance-based (detailed in PRC-005 Attachment A), or a combination of the two would be appropriate to be used for each type of Protection System component. Based upon their own constructive type, all batteries associated with the station DC supply shall be included in a time-based maintenance program consistent with Table 1-4(a) through Table 1-4(f)" 2. Suggest changing the language for the first paragraph in R1.3 to read "Establish the occurrences associated with the time-based maintenance programs up to but no less than the time intervals specified in Table 1-1 through Table 1-5, and Table 2. Consequently, include all applicable monitoring attributes and related maintenance activities characteristic to each type of Protection System component specified in Table 1-1 through Table 1-5, and Table 2" 3. Suggest adding a sub-requirement such as R1.5 to read "Include documentation of maintenance, testing interval and their basis and a summary of testing procedures" Requirement R3 4. The redline version of the standard is misleading. Requirement R3 is crossed out and then replacing requirement R7 which is also crossed out. 5. The wording "initiates resolution of any identified maintenance correctable issues" it is vague. What a responsible entity should do to become compliant with this requirement? We also believe that is not sufficient to just "initiate resolution"; the standard should call for corrective actions to be performed within the maintenance time interval. 6. The "identified maintenance correctable issues" may not be a proper choice. The name of the new term suggests that is about issues that can be corrected during maintenance, while the definition from the clean version explains otherwise?

Organization	Yes or No	Question 5 Comment
		Additional requirement 7. Suggest adding a requirement to read "The Transmission Owner, Generator Owner, and Distribution Provider shall provide documentation of its PSMP and implementation to the appropriate Regional Reliability Organizations on request (within 45 calendar days)." 8. Add measure for the evidence on documenting the PSMP from the additional requirement General comments and notes 9. If you own electro-mechanical relays and microprocessor based relays is there a need to keep two different logs for these? 10. On table 1-4 the generator CTs should be tested earlier than the suggested 12 years due to exposure of continuous mechanical stress 11. Clarify table 1-5 to address verification tests on different circuits. Suggest that the Table 1-5 to read "Complete a terminal test of unmonitored circuitry" instead of the "Unmonitored control circuitry associated with protective functions" 12. In what instances (what extent) would the standard allow using the real time breaker operation to be considered maintenance as applicable to different types of relays involved in the real time event? This is briefly emphasized under TBM at paragraph 5.1 from the supplementary reference document?

Response: Thank you for your comments.

1. It is not enough for an entity to determine if time-based, performance-based, or a combination of the two would be "appropriate"; the entity must specify which method is being used, so that it is clear to both the entity and an auditor if R2 and Attachment A apply.

2. The SDT has considered your comment and has determined that the text currently within the requirement is appropriate.

3. The requirement that you suggest is identical to one of the most troublesome requirements from the approved PRC-005-1. By providing Tables 1-1 through 1-5, as well as Table 2, the SDT is establishing maximum allowable intervals as well as minimum required activities, and thus replacing this PRC-005-1 requirement with a more prescriptive one. If an entity chooses to extend the intervals and alter the activities by using monitoring, or to apply performance-based maintenance per R2 and Attachment A, the additional requirements related to those choices effectively establish a requirement such as you suggest.

4. The red-lining tools in Microsoft Word can sometimes be misleading, but the red-line is provided in an effort to illustrate the changes made to the document. We recommend that the entity use the "clean" version in order to see the final resulting text.

5. The SDT has considered that, while some maintenance correctable issues may be completed very quickly, others may take an extended period (perhaps even several years) to complete effectively, during which time the degraded system must be reported and reflected within the operation of the BES in accordance with

Organization	Yes or No	Question 5 Comment
other standards. The SDT is concerned that the entity will not be able to record the maintenance activity as “complete” during the scheduled interval for these more extended activities to “correct the maintenance correctable issue”; therefore, the SDT has opted to require only that the entity initiate correction of maintenance correctable issues within PRC-005-2 and rely on the operating focus on the degraded system to ensure that they are completed. The associated measure provides examples of relevant documentation. The definition of maintenance correctable issue has been revised to be clearer. 6. The phrase from the entire sentence states “initiate resolution of any identified maintenance correctable issues”. This is to ensure follow-up for items which cannot be corrected during maintenance. The definition of maintenance correctable issue has been revised to be clearer. 7. No direct BES reliability purpose is supported by “on request documentation of a program”; this has value only for monitoring compliance. Additionally, Compliance Enforcement Authorities are empowered by the NERC Rules of Procedure to request information demonstrating compliance at any time. 8. No additional measure is necessary, as the suggested requirement is unnecessary. 9. The SDT is not specifying how the maintenance records are maintained relative to the Standard. It is up to the entity to determine how to best document the detailed implementation of their program. 10. Instrument transformers are addressed in Table 1-3, not Table 1-4. Entities are allowed to maintain components more frequently than required within the Standard if they feel it necessary. 11. The SDT does not believe that the suggested text adds clarity to the standard. Please see Section 15.3 of the Supplementary Reference Document for additional discussion. 12. The SDT suggests that observed in-service performance may be usable for any activities that are clearly verified by the in-service performance.		
Liberty Electric Power LLC		Apologies to the drafting team for submitting this with the ballot, repeated here to insure the comments are captured and addressed. While the SDT has done a very good job at responding to the most objectionable parts of the previous version, there are still a number of issues which makes the standard problematic. 1. The standard introduces the term "initiate resolution". This is an interpretable term, and has the potential for an auditor and an entity to disagree on an action. Would issuing a work order be considered "initiating resolution"? What if the WO had a completion date many years into the future? I would suggest adding the term to the list of definitions which will remain with the standard, and defining it as "performing any task associated with conducting maintenance activities, including but not limited to issuing purchase orders, soliciting bids, scheduling tasks, issuing work requests, and performing studies". 2. Some clarity is needed to differentiate system connected and generator connected station service transformers. A statement that a station service transformer connected radially to the generator bus is considered a system connected transformer if the transformer cannot be used for service unless connected to the BES. 3. The "bookends" issue, brought up in the prior round of comments, still exists. Although the SDT rightly notes a CAN has been issued regarding bookends, the CAN covers the documentation for system

Organization	Yes or No	Question 5 Comment
		components that entities were required to self-certify to on June 18, 2007. PRC-005-2 adds additional components to the protection system scheme which were not part of that certification, and has the potential to put entities into violation space due to a lack of records for those components. The SDT should add to M3 a statement that entities may demonstrate compliance with the standard by demonstrating that required activities took place twice within the maximum maintenance interval -starting from the effective date of the standard - for all components not listed in PRC-005-1.
Response: Thank you for your comments. 1. The SDT believes that issuing a work order would satisfy this requirement. M3 presents several examples of relevant evidence. The SDT has considered that, while some maintenance correctable issues may be completed very quickly, others may take an extended period (perhaps even several years) to complete effectively, during which time the degraded system must be reported and reflected within the operation of the BES in accordance with other standards. The SDT is concerned that the entity will not be able to record the maintenance activity as "complete" during the scheduled interval for these more extended activities to "correct the maintenance correctable issue"; therefore, the SDT has opted to require only that the entity initiate correction of maintenance correctable issues and rely on the operating focus on the degraded system to ensure that they are completed. The definition of maintenance correctable issue has been revised to be clearer. 2. The generator-connected station service transformers are often connected to the generator bus directly without an interposing breaker; thus, the Protection Systems on these transformers will trip the generator as discussed in 4.2.5.1. System connected station service transformers were removed from the Applicability in a previous draft. 3. The Implementation Plan specifies that entities may implement PRC-005-2 incrementally throughout the intervals specified, and that they shall follow their existing program for components not yet implemented. The SDT believes that the "bookends" issue to which you refer is therefore addressed. Also, please see Compliance Process Bulletin 2011-001 for a discussion about data retention.		
Central Lincoln		As we stated two ballots ago, we continue to believe that IEEE battery standard quarterly maintenance was never intended to be performed at a maximum interval of three months. Instead, three months is a target value that might be extended due to emergency. We continue to support a maximum interval of four months for these activities.
Response: Thank you for your comments. The activities involved in the 3-calendar-month maintenance intervals all relate to inspection-type activities of unmonitored battery systems. The SDT believes that an entity may schedule activities for a 3-calendar-month interval without a "grace period" if adequate program oversight is exercised, and disagrees that the intervals should be extended. See Section 7.1 of the "PRC-005-2 Protection System Maintenance Supplementary Reference & FAQ" for a discussion about "calendar month". Basically every "3 Calendar Months" means to add 3 months from the last time the activity was performed.		
Tampa Electric Company		1. As written PRC-005-2 would have a very significant impact on Tampa Electric Company with very little reliability benefit. For the testing of the DC control circuits Tampa Electric would need to remove from

Organization	Yes or No	Question 5 Comment
		service each BES element (circuit, bus, transformer, breaker) and perform an R&C checkout somewhat equivalent to what Tampa Electric does for new construction. That process would have to be repeated no less often than every six years. The testing of DC control circuits to the level described / required in the proposed standard in an energized station is a very risky proposition. Even though an element can be taken out of service for testing, the DC control circuits are often interconnected for functions such as breaker failure, bus and transformer lockouts etc. It is very easy to accidentally trip other in service equipment while doing this testing. Another concern is getting outages on equipment to perform the proposed testing. 2. Tampa Electric believes that there is an unnecessary expansion of the scope of equipment covered by the proposed PRC-005-2 standard into the distribution system related to UVLS and UFLS. Currently, PRC-005-1 includes batteries, instrument transformers, DC control circuitry and communications in addition to the relays for BES protection systems. PRC-008 (UFLS) and PRC-011 (UVLS) are ambiguous as to whether non-relay components are included in those standards. The proposed PRC-005-2 includes the non-relay components into UFLS and UVLS. The problem is, for UFLS and UVLS, the non-relay components are mostly distribution class equipment; hence, the result of this version 2 standard will be inclusion of most distribution class protection system components into PRC-005-2. This is a huge expansion of the scope of equipment covered by the proposed standard with negligible benefit to BES reliability. 3. In addition, testing of protection systems on distribution circuits is difficult for distribution circuits that are radial in nature. In addition, non-relay protection components operate much more frequently on distribution circuits than on transmission Facilities due to more frequent failures due to trees, animals, lightning, traffic accidents, etc., and have much less of a need for testing since they are operationally tested. 4. As another comment, station service transformers are not BES Elements and should not be part of the Applicability - they are radial serving only load. 5. Tampa Electric's Energy Supply Department has the following comment / question regarding Data Retention: For Requirement R3 R2 and Requirement R4R3, the Transmission Owner, Generator Owner, and Distribution Provider shall each keep documentation of the two most recent performances of each distinct maintenance activity for the Protection System components, or all performances of each distinct maintenance activity for the Protection System component since or to the previous scheduled audit date, whichever is longer. If all of the data which the proposed PRC-005-2 standard requires to be collected is not be available or kept for the prescribed period of time, how does a registered entity comply with the required data retention?
Response: Thank you for your comments. 1. Entities must employ processes and training on how to best manage risk . Not performing DC control circuit verification of protection functions is a risk to the		

Organization	Yes or No	Question 5 Comment
reliability of the BES. 2. Section 202 of the NERC Rules of Procedure define "Reliability standard" as "a requirement to provide for reliable operation of the bulk power system …" The requirements regarding maintenance of Protection Systems for UFLS and UVLS directly support this definition. The SDT notes that several Table entries for components that are used only for UFLS or UVLS involve fewer activities and/or longer intervals than for other similar components for generic Protection Systems. 3. The requirements related to UFLS and UVLS, which are commonly applied on non-BES equipment, are less involved than those for other Protection System equipment in recognition of the observations by the commenter. 4. The generator-connected station service transformers are often connected to the generator bus directly without an interposing breaker; thus, the Protection Systems on these transformers will trip the generator as discussed in 4.2.5.1. System connected station service transformers were removed from the Applicability in a previous draft. 5. The stated data retention period is consistent with what auditors are expecting (per the SDT's experience), and is also consistent with Compliance Process Bulletins 2011-001 and 2009-05. The entity is urged to assure that data is retained as specified within the Standard.		
American Transmission Company, LLC		1. Change the text of Standard PRC-005-2 - Protection System Maintenance Table 1-5 on page 19, Row 1, Column 3 to: "Verify that a trip coil is able to operate the circuit breaker, interrupting device, or mitigating device." Or alternately, "Electrically operate each interrupting device every 6 years" Trip coils are designed to be energized no longer than the breaker opening time (3-5 cycles). They are robust devices that will successfully operate the breaker for 5,000-10,000 electrical operations. The most likely source of trip coil failure is the breaker operating mechanism binding, thereby preventing the breaker auxiliary stack from opening and keeping the trip coil energized for too long of a time period. Therefore, trip coil failure is a function of the breaker mechanism failure. Exercising the breakers and circuit switchers is an excellent practice. We would encourage language that would suggest this task be done every 2 years, not to exceed 3 years. Exercising the interrupting devices would help eliminate mechanism binding, reducing the chance that the trip coils are energized too long. The language as currently written in table 1-5 row 1 will also have the unintentional effect of changing an entities existing interrupting device maintenance interval (essentially driving interrupting device testing to a less than 6 year cycle). 2. Change the text of Standard PRC-005-2 -Protection System Maintenance Table 1-5 on page 19, Row 3, Column 2 to: "12 calendar years" The maximum maintenance interval for "Electromechanical lockout and/or tripping devices which are directly in a trip path from the protective relay to the interrupting device trip coil" should be consistent with the "Unmonitored control circuit" interval which is 12 calendar years. In order to test the lockout relays, it

Organization	Yes or No	Question 5 Comment
		may be necessary to take a bus outage (due to lack of redundancy and associated stability issues with delayed clearing). Increasing the frequency of bus outages (with associated lines or transformers) will also increase the amount of time that the BES is in a less intact system configuration. Increasing the time the BES is in a less intact system configuration also increases the probability of a low frequency, high impact event occurring. Therefore, the Maximum Maintenance Interval should be 12 years for lockout relays.ATC recognizes the substantial efforts and improvements to PRC-005-2 that have been made and appreciate the dedicated work of the SDT. We appreciate the removal of Requirement R1.5 and R4 and other clarifications from draft 3. 3. ATC's remaining concern for PRC-005-2 is with definition and timelines established in Table 1-5. ATC believes that, as written, the testing of "each" trip coil and the proposed maintenance interval for lockout testing will result in the increased amount of time that the BES is in a less intact system configuration. ATC hopes that the SDT will consider these changes.
Response: Thank you for your comments. 1. The SDT considers it important to verify that each breaker trip coil has indeed operated within the established intervals. While breakers may be operated much more frequently at times (and allow the entity to document these operations to address this activity), other breakers may not be called on to operate for many years. 2. The SDT believes that electromechanical devices share performance attributes (and failure modes) with electromechanical relays and need to be tested at similar intervals. Performance-Based maintenance is an option to increase the intervals if the performance of these devices supports those intervals. 3. The SDT believes that performing these maintenance activities will benefit the reliability of the BES.		
Tri-State G & T Association, Inc. (3)	Ballot Comment - Affirmative	1: Section A.4.2. They are referencing Protection Systems as if they are Facilities in the Applicability section. Facilities are BES Elements, but Protection Systems are not. That needs to be modified somehow. Perhaps the drafting team needs to add another category under Applicability entitled "Protection Systems" and then list which types are included. 2: Maintenance Correctable Issue - This definition seems to be more of a Maintenance Non-Correctable Issue since it can only be resolved by follow-up corrective action. Suggest changing the term. 3: Change Definitions as indicated below: Segment - Protection System components that are identical or share common elements. Consistent performance is expected across the entire population of a Segment. A Segment must contain at least sixty (60) individual components in order to be considered for inclusion in a performance-based PSMP Component -An individual piece of equipment included in the definition of a Protection System., Entities are allowed some latitude to designate their own definitions of a Component. An example of where the entity

Organization	Yes or No	Question 5 Comment
		has some discretion on determining what constitutes a single Component is the voltage and current sensing devices, where the entity may choose either to designate a full three-phase set of such devices or a single device as a single Component. 4: M1 - Why is the document necessary to be "current or updated?" Eliminate "or updated." 5: The Applicability section needs to be changed, regardless of whether it has been discussed before. Protection Systems are not Facilities.
Response: Thank you for your comments. 1. The standard template allows for two separate sections within Applicability, "Entities" and "Facilities". The listing under Facilities is describing the applicable facilities to which the Protection Systems are applied, clarified further to indicate that only the Protection Systems on those Facilities are relevant. 2. The definition of maintenance correctable issue has been revised to be clearer. Please see Section 4.1 of the Supplementary Reference Document for additional discussion. The revised definition is: **Maintenance Correctable Issue** – Failure of a component to operate within design parameters such that the deficiency cannot be corrected during the performance of the maintenance activity. Therefore this issue requires follow-up corrective action. 3. The SDT does not believe that your suggested changes add clarity. 4. M1 has been modified as you suggest. 5. The standard template allows for two separate sections within Applicability, "Entities" and "Facilities". The listing under Facilities is describing the applicable Facilities to which the Protection Systems are applied, clarified further to indicate that only the Protection Systems on those Facilities are relevant.		
Progress Energy		Comments on Draft Standard 1. Table 1-1, 2nd row, 2nd bullet: The comment "(see Table 2)" does not apply to this bullet, but applies to the first bullet. 2. Table 1-3, 2nd row: Need to add "(See Table 2)." Comments on Implementation Plan 1. Section 3a states that "The entity shall be at least 30% compliant on the first day of the first calendar quarter 2 calendar years following applicable regulatory approval" If regulatory approval occurs on January 31, 2012, does this mean that the entity has until December 31, 2014 to be 30% compliant? It might be beneficial to provide an example explaining "calendar year." Comments on Supplementary Reference

Organization	Yes or No	Question 5 Comment
		1. Table of Contents does not list Section 15.4 2. Page 54, last paragraph, last sentence: “advances that are may be coming” 3. Page 65, 5th paragraph: VLRA should be VRLA 4. Page 67, 4th paragraph, 4th sentence: “typically looking for on the plates” 5. Page 69, 4th paragraph, last sentence: “Grounds because to of the possible” 6. Page 69, 5th paragraph, 2nd sentence: “For example, to do I need” 7. Page 70 5th paragraph, 5th sentence: “A manufacturer of” 8. Page 70 5th paragraph, 6th sentence: “by a third manufacturer’s equipment” 9. Page 71, first line: “(impedance, conductance, and resistance)”

Response: Thank you for your comments.

Draft Standard Comments

1. The Table has been modified as you suggest.

2. The Table has been modified as you suggest.

Implementation Plan Comments

1. The Implementation Plan has been modified for clarity. For the cited example with regulatory approval on January 31, 2012, the entity must be 30% compliant on the first day of the first calendar quarter 24 months following regulatory approvals. Hence, the entity must be 30% compliant on April 1, 2014.

Supplemental Reference Document Comments

1. Changed per your suggestion.

2. Changed per your suggestion.

3. Changed per your suggestion.

4. Changed per your suggestion.

5. Changed per your suggestion.

6. Changed per your suggestion.

7. Changed per your suggestion.

Organization	Yes or No	Question 5 Comment
8. Changed per your suggestion. 9 Changed per your suggestion.		
Dominion Virginia Power		Comments: IEEE battery maintenance standards call for quarterly inspections. These are targets, though, not maximums. An entity wishing to avoid non-compliance for an interval that might extend past three calendar months must implement a policy of two months with one month of grace period thereby increasing the number of inspections each year by half again. This is unnecessarily frequent. We suggest changing the maximum interval for battery inspections to 4 calendar months. For consistency, Dominion suggests that all battery maintenance intervals expressed as 3 calendar months be changed to 4 calendar months.
Response: Thank you for your comments. The activities involved in the 3-calendar-month maintenance intervals all relate to inspection-type activities of unmonitored battery systems. The SDT believes that an entity may schedule activities for a 3-calendar-month interval without a "grace period" if adequate program oversight is exercised, and disagrees that the intervals should be extended. See Section 7.1 of the "PRC-005-2 Protection System Maintenance Supplementary Reference & FAQ" for a discussion about "calendar month". Basically every "3 Calendar Months" means to add 3 months from the last time the activity was performed.		
Santee Cooper		Comments: 1. Santee Cooper does not agree with the expansion of the UFLS and UVLS requirements to include the dc supply. We understand that, in the previous consideration of comments, it is stated that "For UFLS and UVLS, the maintenance activities related to station dc supply and control circuitry are somewhat constrained relative to similar activities for Protection Systems in general." In the table, the requirement for dc supply for UFLS is to verify the station dc supply voltage when the control circuits are verified, which could be 6 or 12 years. It seems like the restraint shown in the requirement, if an indication of the level of need for the verification, is of a much longer timeframe than what would actually happen in the typical operation of a distribution system. Therefore, proof of this verification seems to be of minimal value compared to the extra documentation required due to this now being an auditable maintenance activity. 2. We also agree that maintenance activities with fast intervals, especially the 3 month ones, should be adjusted to 4 months to allow for the actual interval the entities use to be 3 months. Having the requirement at 3 months forces the utilities to schedule even faster (such as every month or 2 months) to ensure compliance.
Response: Thank you for your comments. 1. Section 202 of the NERC Rules of Procedure define "Reliability Standard" as "a requirement to provide for reliable operation of the bulk power system …" The requirements regarding maintenance of Protection Systems for UFLS and UVLS directly support this definition.		

Organization	Yes or No	Question 5 Comment
2. The activities involved in the 3-calendar-month maintenance intervals all relate to inspection-type activities of unmonitored battery systems. The SDT believes that an entity may schedule activities for a 3-calendar-month interval without a "grace period" if adequate program oversight is exercised, and disagrees that the intervals should be extended. See Section 7.1 of the "PRC-005-2 Protection System Maintenance Supplementary Reference & FAQ" for a discussion about "calendar month". Basically every "3 Calendar Months" means to add 3 months from the last time the activity was performed.		
The Detroit Edison Company		1. Countable Event - This definition should be clarified. As it stands, it appears that if a technician were to adjust the settings on an electromechanical relay - even if it were not outside of the entity's acceptable tolerance - it would need to be classified as a countable event. I would recommend that the definition be limited to repairing or replacing a failed component during the maintenance activity. These activities would address conditions that would potentially cause a Protection System misoperation (either a failure to trip or an unintentional trip). Routine maintenance activities to bring component test values back within tolerance should be excluded from the definition of a Countable Event. These activities are performed to keep the protection systems performance at its most ideal state. In addition, the definition as stated appears to classify battery maintenance activities such as cleaning corrosion, adding water, or applying an equalize charge, as countable events. If this is the intent, I disagree. These are activities that are expected to occur on a regular, routine basis due to the chemical properties of the battery (as described at length in the Supplementary Reference). As such, they should also not be classified as countable events. 2. Table 1-1 and Table 1-5 Based on experience with DECo equipment, a 6 year interval for testing monitored relays and performing tests on the breaker trip coil is substantially shorter than required. Currently, the interval for both is 10 years. This interval lines up both with the Transmission Owner's interval for relay maintenance as well as the maintenance interval for the associated current interrupting devices. I would recommend that these intervals be extended, at minimum, back to the 7 year interval proposed in Draft 2 - if not longer. 3. Table 1-4 (a, b, c, e) - Station dc supply using any type of battery recommend that the maintenance activity to "Verify: Station dc supply voltage" be clarified to state that the voltage should be measured at the positive and negative battery terminals. Until you get to page 72 of the Supplementary Reference, you do not know if this means to check the battery voltage or the bus voltage. The "Station dc supply" could refer to the entire dc system. It needs to be made clear in the table that you are referring to the battery. 4. Also, I noticed that there is no longer a requirement to measure individual cell voltages. I was wondering if you could explain the rationale behind that. Checking for voltages that are out of specification in individual cells helps to identify weak cells that may need to be replaced, if corrective action taken on them does not improve their condition. Individual cell voltage readings, along with ohmic readings, have been an industry standard that I believe many, if not most, companies adhere to. 5. Table 1-4 (a, b, c, d)I recommend eliminating the 3 month requirement. We have found annual inspections to be sufficient in catching problems early enough to take corrective action. Page 30 of the Supplementary

Organization	Yes or No	Question 5 Comment
		Reference states that the SDT believes that routine monthly inspections are the norm. While this may be the case at manned stations, it is not at unmanned stations. The amount of paperwork that would be required to demonstrate compliance is overwhelming and would be an immense burden. I have seen your suggestion in past draft comments of the same nature that if we don't want to do the 3 month inspections, then we should utilize more advanced monitoring. This is not something that can be implemented in a short time frame. It would take years to put all of that technology in place, and is rather cost prohibitive. Furthermore, some of the monitoring technologies that would enable you to forgo the 3 month requirement do not exist yet (to my knowledge). I recommend keeping with the 18 month requirement. If that seems too long, based on past experience I think a 12 month requirement would suffice. 6. Table 1-4 (c) I propose keeping the option to evaluate ohmic values to baseline. 7. Table 1-4 (a, b) For the requirement to evaluate the ohmic values to baseline, is a checkbox stating that you did this sufficient, or would a report/graph/etc listing the actual baseline and current value be required? 8. Table 1-4 (f) The first attribute is regarding high and low voltage monitoring and alarming of the battery charger voltage to detect charger overvoltage and charger failure. Would a low voltage alarm combined with high voltage shutdown (but not a high voltage alarm) meet this requirement? The high voltage shutdown will shut the charger down in a high voltage condition, and therefore result in a low voltage alarm, so the outcome is the same.

Response: Thank you for your comments.

1."Tweaking the settings" on a component that is not outside tolerances is not a Countable Event, which is partially defined as "A component which has failed and requires repair or replacement, any condition discovered during the verification maintenance activities in Tables 1-1 through 1-5 which requires corrective action …". However, as described in Clause 9.2 (Question 4) of the Supplementary Reference Document, a device which is outside tolerances should be considered to have experienced a "calibration failure" and thus has experienced a countable event.

2. If an entity's experience is that these components require less-frequent maintenance, a performance-based program in accordance with R2 and Attachment A is an option. The intervals were revised after Draft 3 such that the various intervals are multiples of each other, such that entities may establish a systematic PSMP.

3. Your observation that in section 15.4 of "PRC-005-2 Protection System Maintenance Supplementary Reference & FAQ" the SDT stated that "verification of dc supply voltage is simply an observation of battery voltage" is correct, but the SDT does not agree that the location where voltage should be measured (verified) be contained in PRC-005-2 or the Supplementary Reference document. Due to the variances in topography of dc control circuitry for Protection Systems, a single location for verification of dc supply voltage cannot be specified and must be determined by the Protection System owner.

4. As you correctly stated taking Individual cell voltage readings has been a standard that many companies adhere to. However, this maintenance activity was removed from the standard because it was a "how to requirement".

5. The activities involved in the 3-calendar-month maintenance intervals all relate to inspection-type activities of unmonitored battery systems. The SDT believes that an entity may schedule activities for a 3-calendar-month interval without a "grace period" if adequate program oversight is exercised, and disagrees that the

Organization	Yes or No	Question 5 Comment
intervals should be extended. See Section 7.1 of the "PRC-005-2 Protection System Maintenance Supplementary Reference & FAQ" for a discussion about "calendar month". Basically every "3 Calendar Months" means to add 3 months from the last time the activity was performed. 6. In section 15.4 of "PRC-005-2 Protection System Maintenance Supplementary Reference & FAQ" the SDT explains why in Table 1-4 (c) (Station dc supply using NiCad batteries) the option to evaluate ohmic values to baseline is not available. 7. The SDT believes that just providing "a checkbox stating that you did this" is sufficient proof. Section 15.4 of "PRC-005-2 Protection System Maintenance Supplementary Reference & FAQ" provides additional discussion on this topic. However, the SDT is unable to fully predict what evidence may be required by the Compliance Enforcement Authority to demonstrate compliance. 8. "A low voltage alarm combined with high voltage shutdown (but not a high voltage alarm)" would only partially meet the requirement. To ensure that the automatic shutdown of the battery charger for high voltage conditions is achieved, a high voltage alarm must be a component attribute of the monitoring system in order.		
Florida Keys Electric Cooperative Assoc. (1)	Ballot Comment - Negative	Extreme unreasonableness and undue hardships on entities, specifically smaller entities. Just one example is "battery inspections". What is an inspection - simply visual or cell readings? Some entities may have to assign full time battery maintenance duties. Can SCADA monitor DC voltage trends?
Response: Thank you for your comments. In section 15.4 of "PRC-005-2 Protection System Maintenance Supplementary Reference & FAQ" – that was provided for review and comment with PRC-005-2 – details what should be inspected for visual battery cells. The SDT disagrees that the PRC-005-2 with its accompanying Table 1 imposes "extreme unreasonableness and undue hardships on entities, specifically smaller entities" to maintain a reliable Protection Systems. Monitoring the dc voltages via SCADA is an option.		
FirstEnergy		FE offers the following additional comments and suggestions: We do not agree with the wording of requirement R3. The entity is only required to meet the minimum maintenance intervals of the standard as outlined in Tables 1 and 2. We offer a scenario where an entity states that they will go above the standard and maintain relays on a 4 year cycle. The standard, in meeting an adequate level of reliability, sates that this activity must be performed every 6 years. If the entity happened to miss the 4 year timeframe, deciding from a business standpoint to delay the maintenance to the 5th year, an auditor can find the entity non-compliant per the guidance and wording of the requirements in this standard. However, the entity still exceeded an adequate level of reliability by performing the maintenance within 5 years. This scenario would be very unfortunate to the entity that has essentially done their part in providing reliability to the bulk power system, yet they would be punished for not meeting their more stringent timeframes. This standard's guidance and requirements sends an adverse message to industry. It essentially punishes an entity for going above and beyond the standard except on a few rare occasions. If this were to happen, that entity, and possibly others, would not see the value in going above a standard. It would make entities meet the bare minimum requirements, essentially reducing overall system reliability. Therefore, we

Organization	Yes or No	Question 5 Comment
		suggest the following wording for requirement R3: "R3. Each Transmission Owner, Generator Owner, and Distribution Provider shall implement its PSMP to ensure adherence to the minimum requirements as outlined in Tables 1 and 2, and initiate resolution of any identified maintenance correctable issues."
Response: Thank you for your comments. The Standard requires an entity to implement a PSMP that meets the minimum requirements to the standard. An entity may choose to implement a program that exceeds the requirements.		
City of Farmington (3)	Ballot Comment - Affirmative	FEUS would like to thank the Drafting Team. The proposed PRC-005-2 standard is an improvement over the four standards that it will replace. However, section 4.2 identifies five types of protection systems that the standard is applicable to, but the language of Requirement 1 indicates that applicable entities need to establish a Protection System Maintenance Program (PSMP) for the Protection Systems designed to provide protection for BES Element(s) (Part 4.2.1 of Section 4.2). We believe the intent is to have a PSMP for all Protection Systems identified in Section 4.2 and that the language of Requirement 1 may cause confusion or be misleading. We suggest changing the language of Requirement 1 from: Each Transmission Owner, Generator Owner, and Distribution Provider shall establish a Protection System Maintenance Program (PSMP) for its Protection Systems designed to provide protection for BES Element(s). to: Each Transmission Owner, Generator Owner, and Distribution Provider shall establish a Protection System Maintenance Program (PSMP) for its Protection Systems identified in Section 4.2.
Response: Thank you for your comments. R1 has been modified as you suggest.		
FirstEnergy Energy Delivery FirstEnergy Solutions Ohio Edison Company (1) (3) (4) (5) (6)	Ballot Comment - Affirmative	FirstEnergy appreciates the efforts of the drafting team and supports PRC-005-2. We would also like the team to address our comments and suggestions submitted through the separate comment period.
Response: Thank you for your comments. Please see our responses to your comments submitted with the Formal Comments.		
ITC		1. For Battery System:- Table 1-4(a)o The maximum maintenance interval for the majority of the battery maintenance is listed at "18 calendar months". The current ITC Standard is"once per calendar year and a calendar year is defined as a twelve-month period beginning January 1st and ending December 31st ".

Organization	Yes or No	Question 5 Comment
		ITC would like the maximum maintenance interval at “once per calendar year” 2. Table 1-4(b) o VRLA (Valve Regulated Lead Acid) batteries have an additional inspection at 6 calendar months that includes inspecting the condition of all individual units by measuring the battery cell/unit internal ohmic values. This is in addition to the “18 calendar months” inspection. ITC would like to be consistent with the VLA (Vented Lead Acid) batteries and have only one internal ohmic value inspection once per calendar year. 3. For Battery System:- Table 1-4(a) o The maximum maintenance interval for the majority of the battery maintenance is listed at “18 calendar months”. The current ITC Standard is “once per calendar year and a calendar year is defined as a twelve-month period beginning January 1st and ending December 31st “. ITC would like the maximum maintenance interval at “once per calendar year” 4. Table 1-4(b) VRLA (Valve Regulated Lead Acid) batteries have an additional inspection at 6 calendar months that includes inspecting the condition of all individual units by measuring the battery cell/unit internal ohmic values. This is in addition to the ”18 calendar months” inspection. ITC would like to be consistent with the VLA (Vented Lead Acid) batteries and have only one internal ohmic value inspection once per calendar year. 5. Auxiliary Relays: ITC does not agree with the 6 year interval for Aux relays in the trip circuit. Although they are EM relays they are simple and have very few moving parts. We believe the maintenance period for auxiliary relays should be 12 years and they should be in conjunction with the control circuit. We recognize that Draft 4 only includes auxiliary relays that are directly in the trip path. That is an improvement in Draft 4. In general, auxiliary relays are very reliable; only certain relay types have been proven to be problematic. A known relay type (HEA) has been proven to be problematic if not exercised frequently. The standard should not require a 6 year interval period for all other auxiliary relays. We believe problematic relays should be addressed through use of a NERC Alert process. Don’t cut down the tree for a bad apple.

Response: Thank you for your comments.

1. In choosing the 18 calendar month interval for the maximum maintenance interval for the maintenance activities of table 1-4(a) the SDT was aware that the majority of these activities are recommended to be performed in IEEE 450 “Recommended Practice for Maintenance, Testing, and Replacement of Vented Lead-Acid Batteries for Stationary Applications “at the Yearly inspection. The SDT does not agree that “once per calendar year” would be a more appropriate interval for these activities but notes that entities may choose to perform required activities more frequently than the maximum intervals expressed in the Tables.

Organization	Yes or No	Question 5 Comment
2. In section 15.4 of "PRC-005-2 Protection System Maintenance Supplementary Reference & FAQ" – that was provided for review and comment with PRC-005-2 explaining why the for VRLA battery systems (Table 1-4(b)) the maximum maintenance intervals and maintenance activities cannot be consistent with the intervals and activities of VLA battery systems (Table 1-4(a)). 3. In choosing the 18 calendar month interval for the maximum maintenance interval for the maintenance activities of table 1-4(a) the SDT was aware that the majority of these activities are recommended to be performed in IEEE 450 "Recommended Practice for Maintenance, Testing, and Replacement of Vented Lead-Acid Batteries for Stationary Applications "at the Yearly inspection. However, the SDT has considered that IEEE 450 presents these activities as recommended activities in a vacuum, without considering other activities that are being performed at the 3-calendar-month interval and has established the 18-calendar-month interval to comport to the most aggressive intervals being used in common practice. The SDT does not agree that "once per calendar year" would be a more appropriate interval for these activities but notes that entities may choose to perform required activities more frequently than the maximum intervals expressed in the Tables. 4. Section 15.4 of "PRC-005-2 Protection System Maintenance Supplementary Reference & FAQ" (question – "What are cell/unit internal ohmic measurements "– that was provided for review and comment with PRC-005-2 – explains why the for VRLA battery systems (Table 1-4(b)) the maximum maintenance intervals and maintenance activities cannot be consistent with the intervals and activities of VLA battery systems (Table 1-4(a)). 5. The SDT believes that electromechanical devices share performance attributes (and failure modes) with electromechanical relays and need to be tested at similar intervals. Performance-Based maintenance is an option to increase the intervals if the performance of these devices supports those intervals. If an entities' experience is that these components require less-frequent maintenance, a performance-based program in accordance with R3 and Attachment A is an option.		
Manitoba Hydro		-Grace periods Grace periods should be permitted on the maintenance time intervals. While we understand that grace periods can be built into a PSMP, maintenance decisions that compromise reliability may still have to be made just to meet the specified time
Manitoba Hydro (1) (3) (5) (6)	Ballot Comment - Negative	Manitoba Hydro is voting negative for the following reasons: -Grace periods Grace periods should be permitted on the maintenance time intervals. While we understand that grace periods can be built into a PSMP, maintenance decisions that compromise reliability may still have to be made just to meet the specified time intervals and avoid penalty. An example of this would be removing a hydraulic generator from service at a time of low reserve to meet a maintenance interval and avoid non-compliance (removing an asset in a time of constraint). Grace periods are also required in the case of extreme weather conditions. Such conditions may make it unsafe to perform maintenance within the maintenance interval or may create a risk to reliability if the equipment being maintained is removed from service during these conditions. Utilities need to retain a reasonable amount of discretion and flexibility to make maintenance decisions that are best for reliability without risking non-compliance.
Response: Thank you for your comments. "Grace Periods" within the standard are not measurable, and would probably lead to persistently increasing intervals. However, an entity may establish an internal program with grace-period allowance, as long as the entire program (including grace periods) does not exceed the		

Organization	Yes or No	Question 5 Comment
intervals within the standard.		
Georgia System Operations Corporation (3)	Ballot Comment	GSOC supports comments submitted by Georgia Transmission Corporation
Response: Thank you for your comments. Please see the SDT response to the comments submitted by Georgia Transmission Corporation.		
Electric Market Policy		IEEE battery maintenance standards call for quarterly inspections. These are targets, though, not maximums. An entity wishing to avoid non-compliance for an interval that might extend past three calendar months must implement a policy of two months with one month of grace period thereby increasing the number of inspections each year by half again. This is unnecessarily frequent. We suggest changing the maximum interval for battery inspections to 4 calendar months. For consistency, Dominion suggests that all battery maintenance intervals expressed as 3 calendar months be changed to 4 calendar months.
Response: Thank you for your comments. The activities involved in the 3-calendar-month maintenance intervals all relate to inspection-type activities of unmonitored battery systems. The SDT believes that an entity may schedule activities for a 3-calendar-month interval without a "grace period" if adequate program oversight is exercised, and disagrees that the intervals should be extended. See Section 7.1 of the "PRC-005-2 Protection System Maintenance Supplementary Reference & FAQ" for a discussion about "calendar month". Basically every "3 Calendar Months" means to add 3 months from the last time the activity was performed.		
Alliant Energy Corp. Services, Inc. (4)	Ballot Comment - Negative	1. If PRC-005-2 is going to incorporate PRC-008 (UFLS) and PRC-011 (UVLS) the Purpose needs to be revised to include Distribution Protection Systems designed to protect the BES. 2. We do not believe a distribution relaying system, designed to protect the distribution assets, that may open a transmission element (ie; breaker failure) should be considered part of the BES Protection System. R1 should add the following sentence "Distribution Protection Systems intended solely for the protection of distribution assets are not included as a BES Protection System, even if they may open a BES Element."
Response: Thank you for your comments. 1. Section 202 of the NERC Rules of Procedure define "Reliability standard" as "a requirement to provide for reliable operation of the bulk power system …" The requirements regarding maintenance of Protection Systems for UFLS and UVLS directly support this definition. UFLS and UVLS are described in the Applicability as being included within the Protection System addressed within the standard if they are applied per other NERC Standards. 2. Section 202 of the NERC Rules of Procedure define "Reliability standard" as "a requirement to provide for reliable operation of the bulk power system …" The requirement, as written, supports this.		

Organization	Yes or No	Question 5 Comment
Exelon		1. In response to Exelon's comments provided to drafts 1, 2, and 3 of PRC-005, the SDT did not explain why a conflict with an existing regulatory requirement is acceptable. The SDT previously responded that a conflict does not exist and that the removal of grace periods simply is there to comply with FERC Order directive 693. In response to draft 3 of PRC-005, the SDT stated that "If several different regulatory agencies have differing requirements for similar equipment, it seems that the entity must be compliant with the most stringent of the varying requirements. In the cited case, an entity may need to perform maintenance more frequently than specified within the requirements to assure that they are compliant." Again this does not explain why a conflict with an existing regulatory requirement is acceptable. This response does not answer or address dual regulation by the NRC and by the FERC. Specifically, the request has not been adequately considered for an allowance for NRC-licensed generating units to default to existing Operating License Technical Specification Surveillance Requirements if there is a maintenance interval that would force shutting down a unit prematurely or become non-compliant with PRC-005. Therefore, Exelon again requests that the SDT communicate with the NRC and with the FERC to ensure a conflict of dual regulation is not imposed on a nuclear generating unit without the necessary evaluation. In addition, the SDT still did not fully evaluate or address the concern related to the uniqueness of nuclear generating unit refueling outage schedules. 2. Although Exelon Nuclear agrees with the SDT that the maximum allowed battery capacity testing intervals of not to exceed 6 calendar years for vented lead acid or NiCad batteries (not to exceed 3 calendar years for VRLA batteries) could be integrated within the plant's routine 18 month to 2 year interval refueling outage schedule, the SDT has not considered that nuclear refueling outages may be extended past the 18 month to 2 year "normal" periodicity. There are some unique factors related to nuclear generating units that the SDT has not taken into consideration in that these units are typically online continuously between refueling outages without shutting down for any other required maintenance. Historically, generating units have at times extended planned refueling outage shutdown dates days and even weeks due to requests from transmission operations, fuel issues and electrical demand. Without the grace period exclusion currently allowed by existing maintenance programs, a nuclear plant will be forced to either extend outage duration to include testing on an every other refueling outage (i.e., every four years to ensure compliance for a typical boiling water reactor) or leave the testing on a six year periodicity with the vulnerability of a forced shut down simply to perform maintenance to meet the six year periodicity or a self report of non-compliance. To ensure compliance, the nuclear industry will be forced to schedule battery testing on a four year periodicity to ensure the six year periodicity is met, thus imposing a requirement on nuclear generating units that would not apply to other types of generating units. The SDT response to this question in draft 3 is that "(t)he 18-month (and shorter) interval activities are activities that can be completed without outages - primarily inspection-related activities. An entity may need to perform maintenance more frequently than specified within the requirements to assure that they are compliant." Respectfully Exelon requests that the SDT review and evaluate the concern.

Organization	Yes or No	Question 5 Comment
Response: Thank you for your comments. 1. It appears that the SDT's response was mis-understood. The SDT intended that the response be understood as" in order to be compliant with all requirements, regardless of the different agencies imposing those requirements, the entity will likely have to be compliant with the most stringent of the requirements". Regarding PRC-005-2, an entity must be compliant with the included requirements, even if they are more stringent than other regulatory requirements. 2. The SDT believes that the activities addressed in the comment can be integrated with the 18-24 month plant refueling outage. This may result in the activities being performed more frequently than specified.		
Entergy (3) Entergy Services, Inc. (6)	Ballot Comment - Negative	In Section 4.2, 'Facilities' add the following subsection 4.2.6: Protection Systems for generating units in extended forced outage or in inactive reserve status are excluded from the requirements of this standard. However, the required maintenance and testing of the Protection Systems at these units must be completed prior to connecting the units to the Bulk Electric System (BES). Reason for the above comment: The above units are not connected to the BES and therefore do not affect the reliability of the BES. However, to ensure the reliability of the BES, required maintenance and testing of the Protection Systems at these units must be completed prior to connecting them to the BES.
Response: Thank you for your comments. Please refer to Compliance Application Notice CAN-0011, footnote 5, which states, "The registered entity's Protection System maintenance and testing program is only applicable for Protection System devices in service …" The SDT believes that this guidance will remain durable for PRC-005-2.		
Entergy Services		In Section 4.2, "Facilities" add the following subsection 4.2.6: Protection Systems for generating units in extended forced outage or in inactive reserve status are excluded from the requirements of this standard. However, the required maintenance and testing of the Protection Systems at these units must be completed prior to connecting the units to the Bulk Electric System (BES). Reason for the above comment: The above units are not connected to the BES and therefore do not affect the reliability of the BES. However, to ensure the reliability of the BES, required maintenance and testing of the Protection Systems at these units must be completed prior to connecting them to the BES.
Response: Thank you for your comments. Please refer to Compliance Application Notice CAN-0011, footnote 5, which states, "The registered entity's Protection System maintenance and testing program is only applicable for Protection System devices in service …" The SDT believes that this guidance will remain durable for PRC-005-2.		
MRO's NERC Standards Review Subcommittee		In the checkbox for Requirement R3 please change the wording to read, "Maintenance Correctable Issue - Failure of a component to operate within design parameters such that it cannot be restored to functional order by repair or calibration during performance of the initiating on-site activity. Therefore this issue requires follow-

Organization	Yes or No	Question 5 Comment
		up corrective action."
Response: Thank you for your comments. The definition of maintenance correctable issue has been revised to be clearer: Maintenance Correctable Issue – Failure of a component to operate within design parameters such that the deficiency cannot be corrected during the performance of the maintenance activity. Therefore this issue requires follow-up corrective action.		
Bonneville Power Administration		1. In the header of Tables 1-1, 1-2, 1-3, and 1-5 there is a note that says "Table requirements apply to all components of Protection Systems except as noted." Since each table only applies to the specific component type shown in the header, we do not understand what this note means. The definition given for component only makes the note more confusing. Please clarify the note. 2. Additionally, BPA is voting no during this round due to an issue with the Applicability Section and Section 4.2. Once this issue is clarified, BPA would be in support of a yes vote. Issue: Section 4.2 Facilities lists 5 separate items that the standard is applicable for (4.2.1. - 4.2.5). However Requirement 1 uses language that only addresses one of the items (4.2.1). There is no language contained anywhere within any of the requirements in PRC-005-2 that apply to the types of protection systems described in Applicability Sections 4.2.2 - 4.2.5. Therefore, it could be argued that this leaves it open to interpretation as to whether UFLS/UVLS/SPS are addressed by R1.In the NOPR (Â¶ 105), FERC states that "the Requirements within a standard define what an entity must do to be compliant" Further, in Order 693 (Â¶ 253) FERC explicitly states that "compliance will in all cases be measured by determining whether a party met or failed to meet the Requirement". Given this, then from a compliance perspective, the actual applicability of the standard appears to not be as broad as intended. We ask that this issue be resolved by modifying the language in R1 in a manner that explicitly encompasses all types of protection systems to which it is intended to be applied.
Response: Thank you for your comments. 1. In Table 1-1, for example, this note means that all activities apply to all protective relay components unless specifically differentiated within individual table entries. Because Tables 1-1, 1-2, and 1-3 do not include any additional differentiation within the table, the note was removed from these tables in consideration of your comment. 2. The R1 requirement has been revised in consideration of your comments.		
JEA (3)	Ballot Comment - Negative	JEA maintains testing of lockout relays will have major reliability impact to the JEA system.

Organization	Yes or No	Question 5 Comment
Response: Thank you for your comments. The SDT believes that electromechanical devices share performance attributes (and failure modes) with electromechanical relays and need to be tested at similar intervals. Performance-Based maintenance is an option to increase the intervals if the performance of these devices supports those intervals.		
Tri-State G&T		1. M1 - Why is the document necessary to be "current or updated?" Eliminate "or updated." 2. R1 VSL - Second item in Severe VSL is not addressed in any lower VSL. Should there also be a comparable violation in Lower and Moderate? 3. R2 VSL - Keep the comment about the redundancy in Lower VSL and High VSL for clarifying the difference between the two.
Response: Thank you for your comments. 1. M1 has been revised as suggested and the phrase, "or updated" has been removed 2. The VSL for R1 has been revised to add phased VSLs for Moderate and High related to this item. 3. The High VSL has been modified from three years to four years.		
Ameren		1. Measure M3 on page 5 should apply to 99% of the components. "Each __shall have evidence that it has implemented the Protection System Maintenance Program for 99% of its components and initiate" PRC-005-2 unrealistically mandates perfection without providing technical justification. A basic premise of engineering is to allow for reasonable tolerances, even Six Sigma allows for defects. Requiring perfection may well harm reliability in that valuable resources will be distracted from other duties. 2. Define BES perimeter in accordance with Project 2009-17 Interpretation. Facilities Section 4.2.1 "or designed to provide protection for the BES" needs to be clarified so that it incorporates the latest Project 2009-17 interpretation. The industry has deliberated and reached a conclusion that provides a meaningful and appropriate border for the transmission Protection System; this needs to be acknowledged in PRC-005-2 and carried forward. The BOT adopted this 2/17/2011. 3. Battery inspection every 4 months is sufficient. IEEE battery maintenance standards call for quarterly inspections. These are targets, though, not maximums. An entity wishing to avoid non-compliance for an interval that might extend past three calendar months due to storms and outages must set a target interval of two months thereby increasing the number of inspections each year by half again. This is unnecessarily frequent. We suggest changing the maximum interval for battery inspections to 4 calendar months. For consistency, we also suggest that all intervals expressed as 3 calendar months be changed to 4 calendar months.

Organization	Yes or No	Question 5 Comment
Response: Thank you for your comments. 1. The NERC criteria for VSLs do not currently permit them to allow some level of non-performance without being in violation. 2. The referenced interpretation relates to a quasi-definition of "transmission Protection System", and in the context of the approved PRC-004-1 and PRC-005-1, presents a consistent context for this term. However, the interpretation was constrained to not introduce any requirements or applicability not already included within the approved standards. PRC-005-2 does not use this term, and expands upon the applicability in the interpretation to address what seems to the SDT to be an appropriate applicability for PRC-005-2. The applicability of the interpretation to PRC-004 is not affected by PRC-005-2. 3. The activities involved in the 3-calendar-month maintenance intervals all relate to inspection-type activities of unmonitored battery systems. The SDT believes that an entity may schedule activities for a 3-calendar-month interval without a "grace period" if adequate program oversight is exercised, and disagrees that the intervals should be extended. See Section 7.1 of the "PRC-005-2 Protection System Maintenance Supplementary Reference & FAQ" for a discussion about "calendar month". Basically every "3 Calendar Months" means to add 3 months from the last time the activity was performed.		
Madison Gas and Electric Co. (4)	Ballot Comment - Affirmative	MGE is voting affirmative with the following recommendation to the definition of Maintenance Correctable Issue. Maintenance Correctable Issue - Failure of a component to operate within design parameters such that it cannot be restored to functional order by repair or calibration during performance of the "initiating" on-site activity. Therefore this issue requires follow-up corrective action. The removal of the word "initial" will cause less confusion because the industry does not understand if this is initial (commissioning) or is initial used as when a component requires repair. Recommend "initiating" replace "initial".
Response: Thank you for your comments. The definition of maintenance correctable issue has been revised to be clearer: Maintenance Correctable Issue – Failure of a component to operate within design parameters such that the deficiency cannot be corrected during the performance of the maintenance activity. Therefore this issue requires follow-up corrective action.		
Arizona Public Service Company		NERC continues to be too prescriptive in the standard. For example, Table 1-4(a) requires battery verifications and inspection every three months. We have been performing similar tests every four months for over a decade, with no adverse consequences. Although FERC Order 693 directs NERC to establish maximum allowable intervals, the maximum interval must be "appropriate to the type of protection system and its impact on the reliability of the Bulk-Power System." (Order 693 at 1475)The Standard Drafting Team (SDT) has not demonstrated a mechanism that connects the maximum maintenance interval with its impact on the reliability of the Bulk-Power System. An example can be found on the bottom of page 18 and the top of page 19 of the Consideration of Comments on Protection System Maintenance [Project 2007-17] for draft 3. Although the commenting organization provided a concrete example of successful maintenance under a longer interval, the Standards Drafting Team commented that it "believes that 18-months is the proper interval for this activity." (Emphasis added) An organization cannot challenge the SDT's beliefs, only facts. The basis for each maximum maintenance interval, with appropriate linkage to its impact on the reliability of the Bulk-

Organization	Yes or No	Question 5 Comment
		Power System, needs to be published and voted upon so that factual based proposals to modify the maximum interval can be rationally challenged.
Response: Thank you for your comments. The basis for the intervals established within the standard is described throughout the Supplementary Reference document.		
Northern Indiana Public Service Co. (3)	Ballot Comment - Negative	One of our concerns is that, while the present standard is 2 pages and is the most highly violated and fined standard, the new proposed standard is 22 pages, the implementation plan is 4 pages and the Supplemental FAQ document is 87 pages.
Response: Thank you for your comments. The SDT has established maximum allowable intervals in accordance with FERC Order 693. Additionally, the SDT has addressed many of the common program-related causes of observed violations, and has provided the Supplementary Reference and FAQ to assist entities in implementing their program.		
PJM Interconnection, L.L.C. (2)	Ballot Comment - Negative	PJM has a general problem with how this current draft defines "protection system". The issue is that PJM believes the standard should only apply to Protection relays that are designed to protect the BES. It should not apply to relays that protect the asset itself.
Response: Thank you for your comments. Section 202 of the NERC Rules of Procedure defines “Reliability Standard” as “a requirement to provide for reliable operation of the bulk power system …” The requirements as written directly support this definition.		
Western Area Power Administration		Please explain or clarify the term “mitigating devices” used in Table 1-5 Control Circuitry, Page 19. This term is not well defined in the industry and not easily understood as “interrupting device” or “circuit breaker.”
Response: Thank you for your comments. This term is primarily focused on Special Protection Systems, where they may perform some activity other than “interrupt” to address their design objectives.		
Shermco Industries		1. Please provide clarification on "Communications" in regards to the following: If our customers are utilizing Schweitzer SEL311 relays and utilizing the fiber for transfer trip, is this considered a communications circuit? Our experiences in regards to testing these devices that have transfer trips out into a main substation that could affect a main ring tie or open a major 138kV loop, are that the T&D utilities will not allow us to perform these tests and trip their breakers. Therefore, what is required to satisfy testing? 2. In regards to Function / Trip testing, if we have a sudden pressure device, this is considered an auxiliary relay and the sudden pressure relay itself is not required to be tested. However, the trip path is required to be tested for DC tripping, if it directly trips the breaker feeding the BES, on the DC Control verification

Organization	Yes or No	Question 5 Comment
		testing. Please clarify if this is correct.
Response: Thank you for your comments. 1. The fiber you indicate is a relay communications circuit. The SEL311 monitors the condition of the fiber. It will provide an alarm on loss of communications. If this alarm is not monitored then the entity will be required to check it every 3 months and verify it is still operational. If the communications alarm is brought back to the control center, and the error rate or pilot signal is verified continuously, the interval will be 12 years. 2. Yes, this is correct.		
ExxonMobil Research and Engineering		1. PRC-005-2 is a highly prescriptive standard that prevents small entities from establishing a risk-based approach to protective system maintenance that is commonly used in other industry sectors and forces the small entity to utilize the time-based program. Many registered entities do not have a population size of 60 for each type of protective device. However, they do possess historical records that can be used to calculate the mean time between failures for each equipment type that adequately reflects the service conditions in which the equipment is installed. The SDT should consider allowing registered entities to utilize historical records in their supporting documentation for defining a performance based program. 2. Additionally, by restricting populations by manufacturer model, as referenced in PRC-005-2 Attachment A, the Standard Drafting Team is bordering on anti-competitive behavior as those entities that utilize performance-based programs may be discouraged to utilize alternative suppliers because utilization of a time-based maintenance program on the alternative supplier's equipment may present a cost-benefit analysis hurdle that the supplier of the equipment is not able to overcome. 3. Lastly, the SDT has chosen not to provide a tolerance band for the maximum maintenance intervals it defines in its time-base program. Given that the SDT has not provided sound technical justification (i.e. a study, industry recommended practice, etc.), the SDT should reconsider its stance on providing a tolerance band on the time intervals specified in the time-based program. What is the increase in risk owned by an entity when a protective device is tested at the 6 year and 30 day mark instead of the 6 year mark?
Response: Thank you for your comments. 1. If the historical records fully address the criteria in Attachment A, they would be useful in establishing the basis for a performance-based maintenance program. If the population is not in accordance with the definition of segment in Attachment A, the SDT does not believe that the entity has a statistically-significant sample on which to base a PBM. 2. In order to properly apply a performance-based maintenance program, the components within a segment must be such that they will exhibit similar behavior. Similarly-functioning components from different manufacturers will likely not satisfy this criterion. If an entity does not have sufficient component populations to apply performance-based maintenance, they must revert to time-based maintenance per the Tables or find another entity with whom they can aggregate		

Organization	Yes or No	Question 5 Comment
components within a performance-based maintenance program. Please see Section 9 of the Supplementary Reference Document for a discussion regarding aggregating components between entities within a performance-based maintenance program. 3. There may be minimal additional risk for missing the required interval by only a small amount. However, “grace periods” within the standard are not measurable, and would probably lead to persistently increasing intervals. However, an entity may establish an internal program with grace-period allowance, as long as the entire program (including grace periods) does not exceed the intervals within the standard. Also, this concern is only a practical one if an entity is persistently maintaining its Protection System components at the very end of each maximum allowable interval.		
Luminant		The red-lined version did not appear to agree with the clean copy. In reading the "red lined" document it appears that R3 was intended to be "Each Transmission Owner, Generation Owner, and distribution Provider shall implement and follow its PSPM and initiate resolution of any identified maintenance correctable issues."
Response: Thank you for your comments. The red-lining tools in Microsoft Word can sometimes be misleading, but the red-line is provided in an effort to illustrate the changes made to the document. We recommend that the entity use the “clean” version in order to see the final resulting text.		
MidAmerican Energy Company		Requirement R3 of the standard discusses resolution of “identified maintenance correctable issues”. M3 requires evidence of “resolution of Maintenance Correctable Issues”. The definition of Maintenance Correctable Issue in the standard includes “during performance of the initial on-site activity”. The “initial on-site activity” seems to imply that the corrective steps that need to be tracked are those resulting from the periodic testing that is done for compliance with the standard. It is not clear if the SDT meant to require that records be kept of any required maintenance that is done as a result of a discovered problem or failure that is not identified during the periodic testing.
Response: Thank you for your comments. The SDT has considered that, while some maintenance correctable issues may be completed very quickly, others may take an extended period (perhaps even several years) to complete effectively, during which time the degraded system must be reported and reflected within the operation of the BES in accordance with other standards. The SDT is concerned that the entity will not be able to record the maintenance activity as “complete” during the scheduled interval for these more extended activities to “correct”; therefore, the SDT has opted to require only that the entity initiate correction of maintenance correctable issues and rely on the operating focus on the degraded system to ensure that they are completed. The definition of maintenance correctable issue has been revised, though, to be clearer. Maintenance Correctable Issue – Failure of a component to operate within design parameters such that the deficiency cannot be corrected during the performance of the maintenance activity. Therefore this issue requires follow-up corrective action.		
Consumers Energy (5)	Ballot Comment - Negative	While most of the changes are quite good, I believe R3 may not be what was intended. R3 concludes with "initiate resolution of any identified maintenance correctable issues." My copy of Webster's Dictonary defines initiate as "to set going : start". Thus to meet R3, I need never order a replacement component I just need to write a purchase order (it's the start of the process). If rewiring is needed, I only need to write a maintenance order, rather than sending out an electrician with tools and wire. I believe reliability would be better served to

Organization	Yes or No	Question 5 Comment
		require resolution of the problem rather than just starting a process to begin work.
Response: Thank you for your comments. The SDT has considered that, while some maintenance correctable issues may be completed very quickly, others may take an extended period (perhaps even several years) to complete effectively, during which time the degraded system must be reported and reflected within the operation of the BES in accordance with other standards. The SDT is concerned that the entity will not be able to record the maintenance activity as "complete" during the scheduled interval for these more extended activities to "correct"; therefore, the SDT has opted to require only that the entity initiate correction of maintenance correctable issues and rely on the operating focus on the degraded system to ensure that they are completed.		
Constellation Energy Commodities Group (6) Constellation Power Source Generation, Inc. (5)	Ballot Comment - Negative	1. R3 is vague and can be easily interpreted in a variety of ways. For example, "initiate resolution" may mean closing a work order on a correctable issue or it may mean simply to create a work order with the intent of closing it out. The difference is not just in compliance evidence but it potentially allows an auditor to interpret the requirement to state that closed work orders should be completed in a timely manner. 2. Lastly, the technical man power and compliance documentation needed to implement a performance based protection system maintenance program are so onerous that it is highly unlikely that any entity would use it."
Response: Thank you for your comments. 1. The SDT has considered that, while some maintenance correctable issues may be completed very quickly, others may take an extended period (perhaps even several years) to complete effectively, during which time the degraded system must be reported and reflected within the operation of the BES in accordance with other standards. The SDT is concerned that the entity will not be able to record the maintenance activity as "complete" during the scheduled interval for these more extended activities to "correct"; therefore, the SDT has opted to require only that the entity initiate correction of maintenance correctable issues and rely on the operating focus on the degraded system to ensure that they are completed. The definition of maintenance correctable issue has been revised to be clearer. Maintenance Correctable Issue – Failure of a component to operate within design parameters such that the deficiency cannot be corrected during the performance of the maintenance activity. Therefore this issue requires follow-up corrective action. 2. The SDT understands that the requirements to establish and operate a performance-based PSMP may be beyond what many entities will wish to pursue. However, these are provided for the use of those entities who wish to make use of the analytical resources to optimize their field maintenance.		
MISO Standards Collaborators		1. R3 speaks of a Maintenance Correctable Issue and implementing your Protection System Maintenance Program (PSMP). In the definition of Maintenance Correctable Issue, it states "...of the initial on-site activity". The intent seems to be that during any maintenance activity, and something is found not working properly, you should repair it. Some may look at the word "initial" as during the commissioning of a facility. We recommend the SDT delete the word "initial" to cause less confusion. 2. We recommend the SDT change the text of Standard PRC-005-2 - Protection System Maintenance Table

Organization	Yes or No	Question 5 Comment
		1-5 on page 19, Row 1, Column 3 to "Verify that each a trip coil is able to operate the circuit breaker, interrupting device, or mitigating device." Or alternately, "Electrically operate each interrupting device every 6 years." Trip coils are designed to be energized no longer than the breaker opening time (3-5 cycles). They are robust devices that will successfully operate the breaker for 5,000-10,000 electrical operations. The most likely source of trip coil failure is the breaker operating mechanism binding, thereby preventing the breaker auxiliary stack from opening and keeping the trip coil energized for too long of a time period. Therefore, trip coil failure is a function of the breaker mechanism failure. Exercising the breakers and circuit switchers is an excellent practice. We would encourage language that would suggest this task be done every 2 years, not to exceed 3 years. Exercising the interrupting devices would help eliminate mechanism binding, reducing the chance that the trip coils are energized too long. The language as currently written in Table 1-5, Row 1, will also have the unintentional effect of changing an entities existing interrupting device maintenance interval (essentially driving interrupting device testing to a less than 6 year cycle). 3. We recommend the SDT change the text of Standard PRC-005-2 - Protection System Maintenance Table 1-5 on page 19, Row 3, Column 2 to "12 calendar years". The maximum maintenance interval for "Electromechanical lockout and/or tripping devices which are directly in a trip path from the protective relay to the interrupting device trip coil" should be consistent with the "Unmonitored control circuit" interval which is 12 calendar years. 4. In order to test the lockout relays, it may be necessary to take a bus outage (due to lack of redundancy and associated stability issues with delayed clearing). Increasing the frequency of bus outages (with associated lines or transformers) will also increase the amount of time that the BES is in a less intact system configuration. Increasing the time the BES is in a less intact system configuration also increases the probability of a low frequency, high impact event occurring. Therefore, the Maximum Maintenance Interval should be 12 years for lockout relays. 5. We recognize the substantial efforts and improvements to PRC-005-2 that have been made and appreciate the dedicated work of the SDT. We appreciate the removal of Requirement R1.5 and R4 and other clarifications from draft 3. 6. Our remaining concern for PRC-005-2 is with definition and timelines established in Table 1-5. We believe that, as written, the testing of "each" trip coil and the proposed maintenance interval for lockout testing will result in the increased amount of time that the BES is in a less intact system configuration. We hope that

Organization	Yes or No	Question 5 Comment
		the SDT will consider these changes.
Response: Thank you for your comments. 1. The word, "initial" is intended to emphasize that an identified concern becomes a Maintenance Correctable Issue when the entity is not able to immediately resolve it, and must return to correct the problem. The definition of maintenance correctable issue has been revised to be clearer. Maintenance Correctable Issue – Failure of a component to operate within design parameters such that the deficiency cannot be corrected during the performance of the maintenance activity. Therefore this issue requires follow-up corrective action. 2. The SDT considers it important to verify each breaker trip coil will indeed operate within the established intervals. While breakers may be operated much more frequently at times (and allow the entity to document these operation to address this activity), other breakers may not be called on to operate for many years. 3. The SDT believes that electromechanical devices contain moving parts and share performance attributes (and failure modes) with electromechanical relays and need to be tested at similar intervals. Performance-Based maintenance is an option to increase the intervals if the performance of these devices supports those intervals. 4. The SDT believes that performing these maintenance activities will benefit the reliability of the BES. 5. Thank you. 6. The SDT believes that performing these maintenance activities will benefit the reliability of the BES.		
NERC - EA & I		Recommend entities be explicitly required to document the Relay Maintenance Program in one document. Many entities presently maintain their Protection Maintenance Program in several documents, such as one for relays, one for batteries, etc. This complicates compliance review and contributes to non-compliance since personnel in different departments writing these have different levels of understanding of NERC standards. Separate documents also allow inconsistencies to slip in. Recommend Requirement 1 to changed to the following to address this problem. "Each Transmission Owner, Generator Owner, and Distribution Provider shall establish a Protection System Maintenance Program (PSMP), RECORDED AND UPDATED AS A SINGLE DOCUMNET for its Protection Systems designed to provide protection for BES Element(s). "
Response: Thank you for your comments. The SDT believes that, because of the diversity of different entities and their business arrangements that such a requirement could serve to decrease the quality of an entity's PSMP, particularly for a vertically-integrated entity that includes several of the specified Applicable Entities. For example, the Generator Owner and Transmission Owner are likely to have significant differences for very good reasons.		
Florida Municipal Power Agency (4) (5) (6)	Ballot Comment - Negative	1. Section 4.2.1 states that the Standard is applicable to "Protections Systems designed to provide protection BES Elements." Section 15.1 of the Supplementary Reference Document defines the scope as those "devices that receive the input signal from the current and voltage sensing devices and are used to isolate a faulted element of the BES." These two statements are not exactly equivalent, and in fact, are in conflict

Organization	Yes or No	Question 5 Comment
Florida Municipal Power Pool (6)		with the Interpretation of PRC-004-1 and PRC-005-1 for Y-W Electric and Tri-State, Approved by the Board of Trustees on February 17, 2011. 2. Section 4.2.1 should be changed to "Any Protection System that is installed for the purpose of detecting faults on transmission elements (lines, buses, transformers, etc.) identified as being included in the Bulk Electric System (BES) and trips an interrupting device that interrupts current supplied directly from the BES."
Response: Thank you for your comments. 1. The referenced interpretation relates to a quasi-definition of "transmission Protection System", and in the context of the approved PRC-004-1 and PRC-005-1, presents a consistent context for this term. However, the interpretation was constrained to not introduce any requirements or applicability not already included within the approved standards. PRC-005-2 does not use this term, and expands upon the applicability in the interpretation to address what seems to the SDT to be an appropriate applicability for PRC-005-2. The applicability of the interpretation to PRC-004 is not affected by PRC-005-2. 2. Section 202 of the NERC Rules of Procedure defines "Reliability Standard" as "a requirement to provide for reliable operation of the bulk power system …" The requirements as written directly support this definition.		
US Army Corps of Engineers		1. Section 4.2.5.4 - please clarify generator connected station service transformer. We believe this to mean a station service transformer with no breaker between the transformer and the generator bus. 2. R3 - the term 'initiate resolution' is vague and needs to be further defined. Does this mean putting in a work order or is further action required. 3. Data Retention: The proposed standard clarifies that two of the most recent records of maintenance are to be retained to demonstrate compliance with the prescribed maintenance intervals. When equipment is replaced, the reference information indicates that the information associated with the original equipment must be retained to show compliance with the standard until the performance with the new equipment can be established. This is not explicitly stated in the requirements and warrants a comment.
Response: Thank you for your comments. 1. The commenter is correct. 2. The SDT has considered that, while some maintenance correctable issues may be completed very quickly, others may take an extended period (perhaps even several years) to complete effectively, during which time the degraded system must be reported and reflected within the operation of the BES in accordance with other standards. The SDT is concerned that the entity will not be able to record the maintenance activity as "complete" during the scheduled interval for these more extended activities to "correct"; therefore, the SDT has opted to require only that the entity initiate correction of maintenance correctable issues and rely on the operating focus on the degraded system to ensure that they are completed. The definition of maintenance correctable issue has been revised to be clearer. Maintenance Correctable Issue – Failure of a component to operate within design parameters such that the deficiency cannot be corrected during the		

Organization	Yes or No	Question 5 Comment
performance of the maintenance activity. Therefore this issue requires follow-up corrective action. 3. The data retention section is stated to describe what an entity must do to demonstrate compliance to an auditor on a persistent basis. The additional clarification in the Supplemental Reference Document is provided to share the experiences of SDT members with other entities, and to suggest a possible effective practice.		
Public Utility District No. 1 of Lewis County (5)	Ballot Comment - Negative	Standard does not recognize the affects and great burdens to smaller utilities that have limited staff and great distance to travel out west. Generally, our facilities to not affect the BES. We believe that the battery testing requirements are overkill. The intervals for testing should be placed at minimum of 2 or 3 years
Response: Thank you for your comments. The activities involved in the 3-calendar-month maintenance intervals all relate to inspection-type activities of unmonitored battery systems. The SDT believes that an entity may schedule activities for a 3-calendar-month interval without a "grace period" if adequate program oversight is exercised, and disagrees that the intervals should be extended. See Section 7.1 of the "PRC-005-2 Protection System Maintenance Supplementary Reference & FAQ" for a discussion about "calendar month". Basically every "3 Calendar Months" means to add 3 months from the last time the activity was performed. As for the other shorter-duration activities, the SDT believes that all of these activities, at the specified intervals, are necessary to assure reliability. From the experience of the SDT members, and as supported by various IEEE Standards, it seems clear that delaying the battery maintenance activities to 2-3 years would be detrimental to the reliability of the BES.		
AtCO Electric ltd		1. Table 1-2: the requirement for 12 calendar year verification for the channel and essential signals' performance should be removed. We do not see benefit in the maintenance activities under level 2 (the 12 calendar year requirement) and suggest merging it with level 3 (the "no periodic maintenance specified" requirement). The "loss of function" alarm, will be considered as a countable event to fall under requirement R3 and dealt as maintenance correctable issue. 2. Table 1-5: the requirement of 6 calendar year verification for electrical operation of electromechanical lockout and/or tripping auxiliary devices should be revisited, considering that: " It is not feasible to exercise a lockout relay during maintenance due to high risk to the in-service facility, as well as the complexity of lockout relay connections and protection schemes. Instead, we propose a DC ring test, which verifies the continuity of control circuitry and eliminates the risk impact of lockout or auxiliary tripping device operations." The interval is too frequent. The requirement would become achievable if the 6 calendar year frequency were increased to 12 calendar years, to be in line with microprocessor relay maintenance frequency
Response: Thank you for your comments. 1. Though a channel with continuous alarming may not be in an alarm state during a quiescent state, the alarm function alone does not identify if the channel will fail during fault conditions. Fault noise level and, fault location impact a channels' noise immunity margin. The activities are specified are to ensure reliable		

Organization	Yes or No	Question 5 Comment
performance of the communication channel. 2. The SDT believes that performing these maintenance activities will benefit the reliability of the BES.The SDT believes that electromechanical devices with moving parts share performance attributes (and failure modes) with electromechanical relays and need to be tested at similar intervals. Performance-Based maintenance is an option to increase the intervals if the performance of these devices supports those intervals.		
CPS Energy		1. Table 1-5 The new standard requires that every 6 years it is verified that "each trip coil is able to operate the breaker,". The supplementary reference states that this requirement can be met by tracking real-time fault-clearing operations on the circuit breakers. With transmission breakers typically having dual trip coils, how can tracking real-time operations meet this requirement? Would a breaker operations where relays in both the primary and secondary trip coils indicated operation be sufficient or would some type of trip coil monitoring that showed coil energization be needed? 2. Additionally, regarding the verification of all trip paths of the trip circuit. If a microprocessor relay is used to trip a breaker, and two contacts are paralleled on the relay through a single test switch for breaker tripping, would it be necessary to verify each contact independently or could an assertion of both contacts through the test switch be adequate? In this instance, the functionality of each contact would be fully identical. 3. Table 1-2A 3-month inspection is required for communications equipment that does not have "continuous monitoring or periodic automated testing for the presence of the channel function, and alarming for loss of function" has to be verified that the communication equipment is "functional" with a 3-month site visit. Would a carrier on-off system, that did not perform periodic check back testing, but did have an alarm contact (loss of power, failure, etc.) that was monitored through SCADA would need to have a 3-month inspection? According to the supplemental reference, this inspection should be to verify that the equipment is "operable through a cursory inspection and site visit". It sounds as if this cursory inspection and site visit would accomplish the same as the alarm contact. It does not appear that end-end functional testing of the blocking signal is required by what is provided in the supplemental reference. Is this correct? 4. Table 1-3 - The maintenance activity for the 12 calendar year testing should include a little more specificity. It should have something stating the values provided to the relay are accurate. I know that this discussed in the supplemental reference, but requirement in Table1-3 sounds as if any relay that measured for loss of signal, such as a loss-of-potential function, would be sufficient when the purpose to verify that the signal not only gets to the relay but also has some accuracy as needed by the application of the relay.
Response: Thank you for your comments. 1. If you are able to independently track both trip coils via real-time operations tracking, you could use this tracking to address this activity. If not, you will likely need to perform focused maintenance activities.		

Organization	Yes or No	Question 5 Comment
2. This would be adequate. 3. This is not correct. As you indicate, the 3 month check for unmonitored relay channels is to verify that the channel is functional. For a guard signal, a visual inspection will indicate if a guard or pilot signal is being received. A blocking channel can only be verified by either a checkback test or an end to end signal check. A visual check that the equipment is not failed does not indicate that the channel medium or auxiliary devices are still intact. We will revise the supplementary reference to clear this up (See Section 15.5.1, question "What is needed for the 3-month inspection of communications-assisted trip scheme equipment?"). 4. If the voltage and current signals are measured by the relay and verified to be correct, this would satisfy the required activity in the Table. Please note that, in the definition of Protection System Maintenance Program, "verify" means, "determine that the component is functioning correctly".		
NextEra Energy		Thank you for your diligent efforts in writing the draft standard. The draft standard and associated documents are well written and we believe, after approval, will be instrumental to improving the reliability of the BES. We have the following specific comments: a. The maximum maintenance interval of unmonitored Vented Lead-Acid (VLA) batteries should be changed from 3 calendar months to 12 calendar months. Today's lead-calcium and lead-selenium-low antimony batteries do not have rapid water loss as compared to the legacy lead-antimony batteries. FPL's operating experience has shown that electrolyte in today's VLA cells do not require watering within a 12-month interval. In fact, battery manufacturers now recommend watering intervals of 2 to 3 years for some new batteries. b. The maximum maintenance interval to verify that unmonitored communications systems are functional should be changed from 3 calendar months to 12 calendar months. FPL's operating experience has shown that power line carrier (PLC) failures are primarily due to PLC protective devices (MOVs, gas tubes & spark gaps). Automated testing such as PLC check-back schemes cannot test for failed PLC protective devices. We believe a 12 calendar month functional test is sufficient because of FPL's operating experience. FPL's operating experience has shown that power line carrier (PLC) failures are primarily due to PLC protective devices (MOVs, gas tubes & spark gaps). c. We believe the data retention requirements for R2 and R3 should be documentation for the two most recent maintenance activities. d. Regarding Maintenance Correctable Issue (page2) where it states: ".such that it cannot be restored to functional order during performance of the initial on-site activity". This terminology is vague: Particularly "initial on-site activity". Not sure what "functional order" means? The suggestion is to change to "..such that the deficiency cannot be restored to meet applicable acceptance criteria during the performance of the scheduled maintenance activity". e. Regarding Maintenance Correctable Issue (page 2) and R4 on Page 5, the suggestion is an entirely new "Maintenance Correctable" definition especially: "Therefore this issue requires followup corrective action".

Organization	Yes or No	Question 5 Comment
		Regarding this new definition: Why is it here? Is its purpose to ask us to do something with these issues if we discover them? Do issues identified as "Maint. Correctable" need to be tracked and reported in some manner? The referenced term "Maint. Correctable" is only used in PRC-005-2 in R4 (page 5). The suggestion is to provide clarification. Is this maintenance correctable terminology implying that NERC PRC005-2 is opening up a new requirement for tracking and reporting resolution of "Maint Correctable" issues? The suggestion is to change to: This issue includes any activity requiring further follow-up corrective action to restore operability outside of the applicable maint activity f. Regarding Countable Event (Page 3), the suggestion is an entirely new "Countable Event" definition. Why is this new term and definition "countable event" included in PRC-005-2 ? Note: In the PRC005-2 text "countable event" is actually only referred to in PRC-005-2 in Attachment A under "Performance Based Programs" (not referred to in time based programs section). The recommendation is that the PRC-005-2 version explicitly clarify the definition of â "countable event" to clearly indicate that this term is applicable ONLY to "Performance Based Programs". g. Regarding Countable Event (page 3), where the text says "Any failure of a component which requires repair or replacement, any condition discovered during the verification activities in Tables 1-1/1-5 which requires corrective action..", in the definition for "countable event" what does "corrective action" mean? PRC005-2 is unclear. Does the term "countable event" have any ties to"Maint Correctable" issues. The suggestion is to Consider changing wording from "corrective action" to "which requires > 7 days to correct" and clarify whether or not "countable event" has any correlation to "Maint Correctable" events as discussed on page 2 and in R4? If so please provide language clarifying this correlation.

Response: Thank you for your comments.

a. This activity is primarily inspection-related, and addresses an inspection of electrolyte levels, dc grounds, and station dc supply voltages. Good practice is that entities will conduct a visual inspection of the overall battery condition during these activities, although the Standard does not require it. Also, please note that, while some batteries may reliably go longer between "watering", this activity is to detect gross failures, rather than specifically to address "watering". Please see Section 15.4 of the Supplementary Reference Document for further discussion.

b. A relay communications channel and equipment provide logic for a pilot protective relay system to operate correctly to clear faults instantaneously. Channel failure would cause the protective system to not operate or to operate incorrectly. An unmonitored channel failure will decrease reliability of that protective system until its failure is discovered. One year is too long to risk BES protective systems out of service. The three month interval is devised to maintain BES system reliability. If an entity's experience suggests that longer intervals are appropriate, they may employ performance-based maintenance per R2 and Attachment A. The definition of maintenance correctable issue has been revised to be clearer.

c. From SDT members' experiences, it is clear that auditors will generally wish to monitor compliance all the way back to the previous audit. Please see

Organization	Yes or No	Question 5 Comment
Compliance Application Notice CAN-008 for a discussion about pre-2007 data. d. The definition has been modified in consideration of your comment. Maintenance Correctable Issue – Failure of a component to operate within design parameters such that the deficiency cannot be corrected during the performance of the maintenance activity. Therefore this issue requires follow-up corrective action. e. Yes – the entity is expected to do something in response to an identified Maintenance Correctable Issue, but it is left to the entity to determine the best method for them to track the initiation of resolution of Maintenance Correctable issues. The definition of maintenance correctable issue has been revised to be clearer.. Please refer to M3 for some sample types of evidence. f. Countable events are used only within Attachment A. g. “Countable Event” applies only to performance-based maintenance, and is used solely to determine and evaluate the PBM maintenance intervals. A countable event may (or may not) be a maintenance correctable issue, depending on whether the deficiency is corrected while performing the maintenance activity or requires additional follow-up.		
U.S. Bureau of Reclamation (5)	Ballot Comment - Affirmative	The application of the PSMP should be explicitly defined in the standard. Currently the PSMP is required to protect rather than a PSMP to identify the components defined by the standard. The language should be altered to ensure the PSMP is developed for the component types specified in the standard. The following language should be considered: "Each Transmission Owner, Generator Owner, and Distribution Provider shall establish a Protection System Maintenance Program (PSMP) for its Protection Systems identified in Section 4.2".
Response: Thank you for your comments. R1 has been modified as you suggest.		
NIPSCO		1. The present PRC-005 standard is 2 pages while the proposed PRC-005-2 is 22 pages, with an implementation plan of 4 pages and a supplemental document of 87 pages. The review process appears to be somewhat daunting especially considering that NERC is trying to simply things with such concepts as the “traffic ticket” approach. 2. In R3 we’re not sure if there is a time requirement regarding the completion of the resolution process. We like the use of "calendar year" in requirements which should provide flexibility in getting the work completed. 3. Another comment for our response concerns Table 1-2, Communications Systems (page 11):The first maintenance interval is 3 calendar months. Does this mean the same as 1 calendar quarter?1. Example for 3 calendar months: Maintenance performed on 1/4/11. Next maint due by 4/30/11. Maintenance performed on 4/12/11. Next maint due by 7/31/11. Maintenance performed on 7/30/11. Next maint due by

Organization	Yes or No	Question 5 Comment
		10/31/11. This would yield 3 inspections for 2011. Maintenance performed on 10/12/11. Next maint due by 1/31/12.2. Example for 1 calendar quarter: Maintenance performed on 1/4/11. Next maint due by 6/30/11. This would yield 4 inspections for 2011 (1 per quarter).
Response: Thank you for your comments. 1. The SDT has established maximum allowable intervals in accordance with FERC Order 693. Additionally, the SDT has addressed many of the common program-related causes of observed violations, and has provided the Supplementary Reference and FAQ to assist entities in implementing their program. The "traffic ticket" approach is focused on how the compliance monitor will assess violations, and has no bearing on the Standard itself. 2. The SDT has considered that, while some maintenance correctable issues may be completed very quickly, others may take an extended period (perhaps even several years) to complete effectively, during which time the degraded system must be reported and reflected within the operation of the BES in accordance with other standards. The SDT is concerned that the entity will not be able to record the maintenance activity as "complete" during the scheduled interval for these more extended activities to "correct"; therefore, the SDT has opted to require only that the entity initiate correction of maintenance correctable issues and rely on the operating focus on the degraded system to ensure that they are completed. 3. The intervals, "3 calendar months" and "once per calendar quarter" are not synonymous. "Once per calendar quarter" would effectively permit entities to have six months (less two days) between successive activities, while a "3 calendar month" interval limits an entity to four months (less two days) between activities. See Section 7.1 of the "PRC-005-2 Protection System Maintenance Supplementary Reference & FAQ" for a discussion about "calendar month" Basically every "3 Calendar Months" means to add 3 months from the last time the activity was performed.		
Tenaska, Inc. (5)	Ballot Comment - Negative	1. The biggest concern we have with the proposed standard is the inclusion of 4.2.5.4. As written it is not clear, but more importantly it is overly broad and provides little, if any, increase to reliability. It needs to be deleted. 2. In Section 4.2, five types of protection systems are identified as being applicable, but the language of Requirement 1 indicates that applicable entities need to establish a Protection System Maintenance Program (PSMP) for the Protection Systems designed to provide protection for BES Element(s) (Part 4.2.1 of Section 4.2). We believe the intent is to have a PSMP for all Protection Systems identified in Section 4.2 and that the language of Requirement 1 may cause confusion or be misleading. We suggest changing the language of Requirement 1 from: • Each Transmission Owner, Generator Owner, and Distribution Provider shall establish a Protection System Maintenance Program (PSMP) for its Protection Systems designed to provide protection for BES Element(s). to: • Each Transmission Owner, Generator Owner, and Distribution Provider shall establish a Protection

Organization	Yes or No	Question 5 Comment
		System Maintenance Program (PSMP) for its Protection Systems identified in Section 4.2.
Response: Thank you for your comments. 1. The generator-connected station service transformers are often connected to the generator bus directly without an interposing breaker; thus, the Protection Systems on these transformers will trip the generator as discussed in 4.2.5.1. 2. R1 of the standard has been modified as you suggest.		
Seattle City Light (1) (3) (4)	Ballot Comment - Negative	Seattle City Light (SCL) commends the Standard Drafting Team (SDT) for the many improvements in the latest draft of proposed standard PRC-005-2. The proposed PRC-005-2 standard is an improvement over the four standards that it will replace. Each draft has been better than that preceding, and the supporting material is very helpful in understanding the impact and implementation of the proposed Standard. However, SCL votes NO for this draft because of 1) the inclusion and treatment of electromechanical lockout relays within the scope of draft Standard and 2) 2) confusion about language between section 4.2 and Requirement 1. 1. Regarding electromechanical lockout relays, SCL is highly concerned about the reliability risks and logistical difficulties associated with meeting the requirements proposed for these relays. Lockout relays operate rarely and are known for reliable service. For many such relays, the proposed maintenance would require clearance of entire bus sections or even multiple bus sections (such as for a bus differential lockout relay). In SCL's opinion, the reliability risks posed by such switching and outages to the Bulk Electric System outweigh the reliability benefits of including lockout relays in the scope of PRC-005-2. If the SDT deems it necessary to include electromechanical lockout relays within PRC-005-2, SCL recommends that a difference be made between the maintenance activities specified for monitored and unmonitored types. The draft Standard describes the requirements for "electromechanical lockout and/or tripping auxiliary devices" in Table 1-5 (p.19) and assigns a 6-year maximum maintenance interval, the same as for other unmonitored relays. Modern electromechanical lockout relays may be specified with a built-in self-monitoring trip-coil alarm. SCL believes the maintenance requirements for electromechanical lockout relays with such an alarm should be similar to those for other alarmed or monitored relays. As such we recommend that a new entry be added to Table 1-5 for monitored electromechanical lockout relays, as follows:

Organization	Yes or No	Question 5 Comment
		• Component Attributes: Electromechanical lockout and/or tripping auxiliary devices which are directly in a trip path from the protective relay to the interrupting device trip coil AND include built-in self-monitoring trip-coil alarm • Maximum Maintenance Interval: 12 calendar years • Maintenance Activities: Verify electrical operation of electromechanical trip and auxiliary devices. Verify that the alarm path conveys alarm signals to a location where corrective action can be initiated. 2. We also would like to comment regarding confusion over language in section 4.2.This section identifies five types of Facilities that the standard is applicable to, whereas Requirement 1 indicates that applicable entities need to establish a Protection System Maintenance Program (PSMP) for the Protection Systems designed to provide protection for BES Element(s) (Part 4.2.1 of Section 4.2). As such, it is not clear if PRC-005-2 applies to five Facilities or to certain Protection Systems. SCL believes the intent is to have a PSMP for all Protection Systems identified in "Part A, Section 4.2 - Facilities" and that the language of Requirement 1 may cause confusion or be misleading. We suggest changing the language of Requirement 1 from: • Each Transmission Owner, Generator Owner, and Distribution Provider shall establish a Protection System Maintenance Program (PSMP) for its Protection Systems designed to provide protection for BES Element(s). to: • Each Transmission Owner, Generator Owner, and Distribution Provider shall establish a Protection System Maintenance Program (PSMP) for its Facilities identified in Part A, Section 4.2.
Response: Thank you for your comments. 1. The SDT believes that performing these maintenance activities will benefit the reliability of the BES. The SDT believes that electromechanical devices having moving parts share performance attributes (and failure modes) with electromechanical relays and need to be tested at similar intervals. Performance-Based maintenance is an option to increase the intervals if the performance of these devices supports those intervals. 2. R1 has been modified as you suggest.		
Seattle City Light (5) (6)	Ballot Comment - Negative	Seattle City Light (SCL) commends the Standard Drafting Team (SDT) for the many improvements in the latest draft of proposed standard PRC-005-2. The proposed PRC-005-2 standard is an improvement over the four standards that it will replace. Each draft has been better than that preceding, and the supporting material is very helpful in understanding the impact and implementation of the proposed Standard. However, SCL votes NO for this draft because of

Organization	Yes or No	Question 5 Comment
		1) the inclusion and treatment of electromechanical lockout relays within the scope of draft Standard and 2) confusion about language between section 4.2 and Requirement 1. 1. Regarding electromechanical lockout relays, SCL is highly concerned about the reliability risks and logistical difficulties associated with meeting the requirements proposed for these relays. Lockout relays operate rarely and are known for reliable service. For many such relays, the proposed maintenance would require clearance of entire bus sections or even multiple bus sections (such as for a bus differential lockout relay). In SCL's opinion, the reliability risks posed by such switching and outages to the Bulk Electric System outweigh the reliability benefits of including lockout relays in the scope of PRC-005-2. If the SDT deems it necessary to include electromechanical lockout relays within PRC-005-2, SCL recommends that a difference be made between the maintenance activities specified for monitored and unmonitored types. The draft Standard describes the requirements for "electromechanical lockout and/or tripping auxiliary devices" in Table 1-5 (p.19) and assigns a 6-year maximum maintenance interval, the same as for other unmonitored relays. Modern electromechanical lockout relays may be specified with a built-in self-monitoring trip-coil alarm. SCL believes the maintenance requirements for electromechanical lockout relays with such an alarm should be similar to those for other alarmed or monitored relays. As such we recommend that a new entry be added to Table 1-5 for monitored electromechanical lockout relays, as follows: • Component Attributes: Electromechanical lockout and/or tripping auxiliary devices which are directly in a trip path from the protective relay to the interrupting device trip coil AND include built-in self-monitoring trip-coil alarm o Maximum Maintenance Interval: 12 calendar years • Maintenance Activities: Verify electrical operation of electromechanical trip and auxiliary devices. Verify that the alarm path conveys alarm signals to a location where corrective action can be initiated. 2. Regarding confusion over language, section 4.2 section identifies five types of Facilities that the standard is applicable to, whereas Requirement 1 indicates that applicable entities need to establish a Protection System Maintenance Program (PSMP) for the Protection Systems designed to provide protection for BES Element(s) (Part 4.2.1 of Section 4.2). As such, it is not clear if PRC-005-2 applies to five Facilities or to certain Protection Systems. SCL believes the intent is to have a PSMP for all Protection Systems identified in "Part A, Section 4.2 - Facilities" and that the language of Requirement 1 may cause confusion or be misleading. We suggest changing the language of Requirement 1 from: • Each Transmission Owner, Generator Owner, and Distribution Provider shall establish a Protection

Organization	Yes or No	Question 5 Comment
		System Maintenance Program (PSMP) for its Protection Systems designed to provide protection for BES Element(s). to: • Each Transmission Owner, Generator Owner, and Distribution Provider shall establish a Protection System Maintenance Program (PSMP) for its Facilities identified in Part A, Section 4.2.
Response: Thank you for your comments. 1. The SDT believes that performing these maintenance activities will benefit the reliability of the BES. The SDT believes that electromechanical devices having moving parts share performance attributes (and failure modes) with electromechanical relays and need to be tested at similar intervals. Performance-Based maintenance is an option to increase the intervals if the performance of these devices supports those intervals. 2. R1 has been modified as you suggest.		
Colorado Springs Utilities (1)	Ballot Comment - Negative	The proposed PRC-005-2 standard is an improvement over the four standards that it will replace. However, section 4.2 identifies five types of protection systems that the standard is applicable to, but the language of Requirement 1 indicates that applicable entities need to establish a Protection System Maintenance Program (PSMP) for the Protection Systems designed to provide protection for BES Element(s) (Part 4.2.1 of Section 4.2). We believe the intent is to have a PSMP for all Protection Systems identified in Section 4.2 and that the language of Requirement 1 may cause confusion or be misleading. We suggest changing the language of Requirement 1 from: • Each Transmission Owner, Generator Owner, and Distribution Provider shall establish a Protection System Maintenance Program (PSMP) for its Protection Systems designed to provide protection for BES Element(s). to: • Each Transmission Owner, Generator Owner, and Distribution Provider shall establish a Protection System Maintenance Program (PSMP) for its Protection Systems identified in Section 4.2. Even with this change, the standard is still vague given the fact that there is no clear definition of "BES" or "Protective relay".
Response: Thank you for your comments. R1 has been modified as you suggest.		
Western Electricity Coordinating Council (10)	Ballot Comment - Affirmative	The proposed PRC-005-2 standard is an improvement over the four standards that it will replace. However, section 4.2 identifies five types of protection systems that the standard is applicable to, but the language of Requirement 1 indicates that applicable entities need to establish a Protection System Maintenance Program (PSMP) for the Protection Systems designed to provide protection for BES Element(s) (Part 4.2.1 of Section 4.2). We believe the intent is to have a PSMP for all Protection Systems identified in Section 4.2 and that the language of Requirement 1 may cause confusion or be misleading. To address the potential for confusion we

Organization	Yes or No	Question 5 Comment
		suggest changing the language of Requirement 1 from: • Each Transmission Owner, Generator Owner, and Distribution Provider shall establish a Protection System Maintenance Program (PSMP) for its Protection Systems designed to provide protection for BES Element(s). to: • Each Transmission Owner, Generator Owner, and Distribution Provider shall establish a Protection System Maintenance Program (PSMP) for its Protection Systems identified in Section 4.2.
Western Electricity Coordinating Council		The proposed PRC-005-2 standard is an improvement over the four standards that it will replace. However, section 4.2 identifies five types of protection systems that the standard is applicable to, but the language of Requirement 1 indicates that applicable entities need to establish a Protection System Maintenance Program (PSMP) for the Protection Systems designed to provide protection for BES Element(s) (Part 4.2.1 of Section 4.2). We believe the intent is to have a PSMP for all Protection Systems identified in Section 4.2 and that the language of Requirement 1 may cause confusion or be misleading. We suggest changing the language of Requirement 1 from: • Each Transmission Owner, Generator Owner, and Distribution Provider shall establish a Protection System Maintenance Program (PSMP) for its Protection Systems designed to provide protection for BES Element(s). to: • Each Transmission Owner, Generator Owner, and Distribution Provider shall establish a Protection System Maintenance Program (PSMP) for its Protection Systems identified in Section 4.2.
Response: Thank you for your comments. R1 has been modified as you suggest.		
California Energy Commission (9) Entegra Power Group, LLC (5)Idaho Power Company (1) NorthWestern Energy (1) Platte River Power Authority (1)	Ballot Comment – Affirmative (except for PUD of Grant County - Negative	The proposed PRC-005-2 standard is an improvement over the four standards that it will replace. However, section 4.2 identifies five types of protection systems that the standard is applicable to, but the language of Requirement 1 indicates that applicable entities need to establish a Protection System Maintenance Program (PSMP) for the Protection Systems designed to provide protection for BES Element(s) (Part 4.2.1 of Section 4.2). We believe the intent is to have a PSMP for all Protection Systems identified in Section 4.2 and that the language of Requirement 1 may cause confusion or be misleading. We suggest changing the language of Requirement 1 from: • Each Transmission Owner, Generator Owner, and Distribution Provider shall establish a Protection System Maintenance Program (PSMP) for its Protection Systems designed to provide protection for BES Element(s). to:

Organization	Yes or No	Question 5 Comment
(3) (6) Public Utility District No. 1 of Douglas County (4) Public Utility District No. 2 of Grant County (3) Utah Public Service Commission (9)		• Each Transmission Owner, Generator Owner, and Distribution Provider shall establish a Protection System Maintenance Program (PSMP) for its Protection Systems identified in Section 4.2.
Response: Thank you for your comments. The Standard has been modified as you suggest.		
Tucson Electric Power Co. (1)	Ballot Comment - Negative	The proposed PRC-005-2 standard is an improvement over the four standards that it will replace. However, section 4.2 identifies five types of protection systems that the standard is applicable to, but the language of Requirement 1 indicates that applicable entities need to establish a Protection System Maintenance Program (PSMP) for the Protection Systems designed to provide protection for BES Element(s) (Part 4.2.1 of Section 4.2). I believe the intent is to have a PSMP for all Protection Systems identified in Section 4.2 and that the language of Requirement 1 may cause confusion or be misleading. Suggest changing the language of Requirement 1 to: • Each Transmission Owner, Generator Owner, and Distribution Provider shall establish a Protection System Maintenance Program (PSMP) for its Protection Systems identified in Section 4.2.
Response: Thank you for your comments. The Standard has been modified as you suggest.		
Ingleside Cogeneration LP		The removal of R1.5 and R7 which required Protection System owners to identify and verify calibration tolerances or equivalent parameters upon conclusion of a maintenance activity was fundamental to Ingleside Cogeneration's yes vote. The amount of ambiguity introduced by the requirements and associated documentation did not serve to improve BES reliability in our view.
Response: Thank you for your comments.		
Transmission Access Policy		The scope of the equipment to which the draft standard applies is over-broad.

Organization	Yes or No	Question 5 Comment
Study Group		Specifically, PRC-005-2 should not apply to non-relay equipment for UFLS and UVLS systems. Subjecting UFLS and UVLS batteries, instrument transformers, DC control circuitry, and communications to the requirements of PRC-005-2 would drastically increase the scope of equipment covered by the standard, with no corresponding benefit to reliability, for the following reasons. In contrast to transmission and generation protection systems and SPSs, for which there are typically two protection systems per facility and therefore per fault, UFLS and UVLS deal with widespread events. For any under-voltage or under-frequency event, there are literally hundreds of UFLS/UVLS relays to respond. It is therefore far less critical if one UFLS or UVLS relay fails to operate properly. Furthermore, transmission is typically not radial (in fact, radials to load are excluded from the BES). But distribution circuits, where UFLS and UVLS systems are located, are usually radial. Testing some of the non-relay equipment to which the draft standard applies would require blacking out the customers served by that radial. In other words, the draft standard would require entities to definitely cause blackouts in an attempt to prevent very unlikely potential blackouts. This is plainly not justified from a harm/benefit perspective. Finally, many of the types of non-relay equipment to which the standard would apply are in effect tested by faults. Specifically, faults happen on distribution circuits (where UFLS and UVLS systems are located) more frequently than on transmission circuits, due to such things as animal contacts and car accidents. Any such fault is in fact a test of the all the equipment that is involved in clearing the fault. There is no need to require separate tests of that equipment, any more than we would require tests of a phone line that is used on an everyday basis; you already know that the phone works.
Response: Thank you for your comments. Section 202 of the NERC Rules of Procedure defines “Reliability Standard” as “a requirement to provide for reliable operation of the bulk power system …” The requirements regarding maintenance of Protection Systems for UFLS and UVLS directly support this definition.		
Illinois Municipal Electric Agency		The scope of the equipment to which the draft standard applies is still overly broad. Specifically, PRC-005-2 should not apply to non-relay equipment for UFLS and UVLS systems. Subjecting UFLS and UVLS batteries, instrument transformers, DC control circuitry, and communications to the requirements of PRC-005-2 would drastically increase the scope of equipment covered by the standard, with no corresponding benefit to reliability of the BES. This comment/recommendation is provided to address the resource and customer service interests of a TO and/or DP systems serving distribution load. Illinois Municipal Electric Agency supports comments submitted by the Transmission Access Policy Study Group.
Response: Thank you for your comments. Section 202 of the NERC Rules of Procedure define “Reliability standard” as “a requirement to provide for reliable operation of the bulk power system …” The requirements regarding maintenance of Protection Systems for UFLS and UVLS directly support this definition.		
ISO/RTO Standards Review		The SRC disagrees with the change to the term under 4.2.1. “Protection Systems designed to provide protection for BES elements.” We support keeping the previous version’s wording of 4.2.1. “Protection

Organization	Yes or No	Question 5 Comment
Committee		Systems applied on, or designed to provide protection for the BES." The revised wording expands the fundamental purpose of the NERC PRC-005 standard from being focused on ensuring relays intended to protect the reliability of the BES are maintained to a standard whose intent is to ensure all BES facilities have relay maintenance programs. Although we do not disagree with maintaining all relays, regardless of what their intended purposes are, it should not be the purpose of a NERC standard to police all protection schemes beyond those needed for interconnected reliability. There are numerous protective relays employed on facilities interconnected to the BES but their purpose may be for operating preference or service/equipment quality purposes such as reclosing schemes and transformer sudden pressure relays. We believe the NERC PRC-005 standard should be focused on maintenance of those protective relays which are needed to ensure that the loss of a single element does not cause cascading effects on the bulk power system.
Response: Thank you for your comments. Clause 4.2.1 has been modified to improve consistency with the Interpretation that has become part of PRC-005-1a.		
Duke Energy		The Standard Drafting Team has done an outstanding job on this standard. We are voting "Affirmative" but note that implementation questions remain, particularly with regards to classifying component attributes as "monitored," "unmonitored," "internal self diagnosis," "alarming," "alarming for excessive error" and "alarming for excessive performance degradation". The sheer size of the population of protective relays, communications systems, voltage and current sensing devices, batteries, and dc supply components means that the size of the effort required to categorize each individual component could drive us to test and maintain on the more frequent unmonitored time intervals, simply because of the difficulty in assembling "monitored" compliance documentation.
Response: Thank you for your comments. The opportunity to use "monitoring" to extend the intervals and reduce the activities, as well as the opportunity to use performance-based maintenance, is provided for those entities who wish to apply the administrative resources in order to minimize the field maintenance. If entities choose not to use those opportunities, the SDT believes that the un-monitored intervals and activities will establish an effective PSMP.		
Pepco Holdings Inc		There were numerous comments submitted for each of the previous drafts indicating that the 3 month interval for verifying unmonitored communication systems was much too short. The SDT declined to change the interval and in their response stated: "The 3 month intervals are for unmonitored equipment and are based on experience of the relaying industry represented by the SDT, the SPCTF and review of IEEE PSRC work. Relay communications using power line carrier or leased audio tone circuits are prone to channel failures and are proven to be less reliable than protective relays." Statistics on the causes of BES protective system misoperations, however, do not support this assertion. The PJM Relay Subcommittee has been tracking 230kV and above protective system misoperations on the PJM system for many years. For the six year period from 2002 to 2007, the number of protective system misoperations due to communication system problems was lower (and in many cases significantly lower) than those caused by defective relays, in every year but one. Similarly, RFC has conducted an analysis of BES protection system misoperations for 2008

Organization	Yes or No	Question 5 Comment
		and 2009, and found the number of misoperations caused by communication system problems to be in line with the number attributed to relay related problems. If unmonitored protective relays have a 6 year maximum maintenance/inspection interval, it does not seem reasonable to require the associated communication system to be inspected 24 times more frequently, particularly when relay failures are statistically more likely to cause protective system misoperations. As such, a 12 or 18 calendar month interval for inspection of unmonitored communication systems would seem to be more appropriate. FAQ II 6 B states that the concept should be that the entity verify that the communication equipment...is operable through a cursory inspection and site visit. However, unlike FSK schemes where channel integrity can easily be verified by the presence of a guard signal, ON-OFF carrier schemes would require a check-back or loop-back test be initiated to verify channel integrity. If the carrier set was not equipped with this feature, verification would require personnel to be dispatched to each terminal to perform these manual checks. The SDT responded that they still felt the 3 month interval as stated in the standard was appropriate. PHI respectfully requests that the SDT reconsider this issue and also cite what "specific statistical data" they used to validate that unmonitored communication systems are 24 times more prone to failure than unmonitored protective relays.
Response: Thank you for your comments. The SDT believes that relay communications channels are more susceptible to failure from an outside influence than a protective relay. Leased circuits from communications providers and carrier channels are highly exposed to lightning, automobiles, backhoes, etc. We believe the existing statistics from PJM and RFC on relay communications system based misoperation causes is due to the present practice of periodic channel verifications being performed. Many utilities presently use channel monitoring and carrier checkbacks to ensure reliable operation.		
Liberty Electric Power LLC (5)	Ballot Comment - Negative	While the SDT has done a very good job at responding to the most objectionable parts of the previous version, there are still a number of issues which makes the standard problematic. 1. The standard introduces the term "initiate resolution". This is an interpretable term, and has the potential for an auditor and an entity to disagree on an action. Would issuing a work order be considered "initiating resolution"? What if the WO had a completion date many years into the future? I would suggest adding the term to the list of definitions which will remain with the standard, and defining it as "performing any task associated with conducting maintenance activities, including but not limited to issuing purchase orders, soliciting bids, scheduling tasks, issuing work requests, and performing studies". 2. Some clarity is needed to differentiate system connected and generator connected station service transformers. A statement that a station service transformer connected radially to the generator bus is considered a system connected transformer if the transformer cannot be used for service unless connected to the BES. 3. The "bookends" issue, brought up in the prior round of comments, still exists. Although the SDT rightly notes a CAN has been issued regarding bookends, the CAN covers the documentation for system

Organization	Yes or No	Question 5 Comment
		components that entities were required to self-certify to on June 18, 2007. PRC-005-2 adds additional components to the protection system scheme which were not part of that certification, and has the potential to put entities into violation space due to a lack of records for those components. 4. The SDT should add to M3 a statement that entities may demonstrate compliance with the standard by demonstrating that required activities took place twice within the maximum maintenance interval -starting from the effective date of the standard - for all components not listed in PRC-005-1.
Response: Thank you for your comments. 1. The SDT believes that issuing a work order would satisfy this requirement. M3 presents several examples of relevant evidence. The SDT has considered that, while some maintenance correctable issues may be completed very quickly, others may take an extended period (perhaps even several years) to complete effectively, during which time the degraded system must be reported and reflected within the operation of the BES in accordance with other standards. The SDT is concerned that the entity will not be able to record the maintenance activity as "complete" during the scheduled interval for these more extended activities to "correct the maintenance correctable issue"; therefore, the SDT has opted to require only that the entity initiate correction of maintenance correctable issues and rely on the operating focus on the degraded system to ensure that they are completed. 2. The generator-connected station service transformers are often connected to the generator bus directly without an interposing breaker; thus, the Protection Systems on these transformers will trip the generator as discussed in 4.2.5.1. System connected station service transformers were removed from the Applicability in a previous draft. 3. The Implementation Plan specifies that entities may implement PRC-005-2 incrementally throughout the intervals specified, and that they shall follow their existing program for components not yet implemented. The SDT believes that the "bookends" issue to which you refer is therefore addressed. 4. The Standard requires that activities only take place once within the established interval.		
SPP reliability standard development Team		Would like more clarification in table 1-5 to address verification tests on different circuits. Is this an end to end test or partial test can you test one part of the circuit one way and another a different way? Should table 1-5 read Complete a terminal test of unmonitored circuitry?
Response: Thank you for your comments. The SDT does not believe that the suggested text adds clarity to the standard. Please see Section 15.3 of the Supplementary Reference Document for additional discussion.		
Lakeland Electric (1)	Ballot Comment - Negative	The new PRC-005-2 includes non-relay components into UFLS and UVLS. The problem is, for UFLS and UVLS, these non-relay components are mostly distribution class equipment; hence, the result of this version 2 standard will be inclusion of most distribution class protection system components into PRC-005-2. This is a huge expansion of the scope of equipment covered by the standard with negligible benefit to BES reliability. While Lakeland Electric agrees wholeheartedly with the inclusion of non-relay components for BES Protection Systems. It is critical that BES Protection Systems work and clear the fault (e.g., on > 100 kV Facilities).

Organization	Yes or No	Question 5 Comment
		However, UFLS and UVLS are quite different. For an event requiring UFLS and UVLS operation, there are many, e.g., hundreds and possibly thousands of relays, that operate to shed load automatically and if a small percentage of those do not operate as expected, the impact is minimal. So, it is not important for BES reliability to include non-relay components of UFLS and UVLS in the PRC-005-2 standard.
Response: Thank you for your comments. Section 202 of the NERC Rules of Procedure defines "Reliability Standard" as "a requirement to provide for reliable operation of the bulk power system …" The requirements regarding maintenance of Protection Systems for UFLS and UVLS directly support this definition.		
City of Bartow, Florida (3)	Ballot Comment - Negative	There is an unnecessary expansion of the scope of equipment covered by this standard into the distribution system related to UVLS and UFLS. Currently, PRC-005-1 includes batteries, instrument transformers, DC control circuitry and communications in addition to the relays for BES protection systems. PRC-008 (UFLS) and PRC-011 (UVLS) are ambiguous as to whether non-relay components are included in those standards. The new PRC-005-2 includes these non-relay components into UFLS and UVLS. The problem is, for UFLS and UVLS, these non-relay components are mostly distribution class equipment; hence, the result of this version 2 standard will be inclusion of most distribution class protection system components into PRC-005-2. This is a huge expansion of the scope of equipment covered by the standard with negligible benefit to BES reliability. We agree wholeheartedly with the inclusion of non-relay components for BES Protection Systems. It is critical that BES Protection Systems work and clear the fault (e.g., on > 100 kV Facilities). However, UFLS and UVLS are quite different. For an event requiring UFLS and UVLS operation, there are many, e.g., hundreds and possibly thousands of relays, that operate to shed load automatically and if a small percentage of those do not operate as expected, the impact is minimal. So, it is not important for BES reliability to include non-relay components of UFLS and UVLS in the PRC-005-2 standard. In addition, testing of protection systems on distribution circuits is difficult for distribution circuits that are radial in nature. For instance, testing trip coils of a distribution breakers will likely results in service interruption to customers on that distribution circuit in order to test the breaker or to perform break-before-make switching on the distribution system often required to manage maximum available fault current on the distribution system for worker safety, etc.. Hence, the standard would be sacrificing customer service quality for an infinitesimal increase in BES reliability. In addition, non-relay protection components operate much more frequently on distribution circuits than on transmission Facilities due to more frequent failures due to trees, animals, lightning, traffic accidents, etc., and have much less of a need for testing since they are operationally tested.
Response: Thank you for your comments. Section 202 of the NERC Rules of Procedure defines "Reliability Standard" as "a requirement to provide for reliable operation of the bulk power system …" The requirements regarding maintenance of Protection Systems for UFLS and UVLS directly support this definition.		
Lakeland Electric (6)	Ballot Comment -	Unnecessary expansion of the scope of equipment covered by this standard into the distribution system related to UVLS and UFLS. Currently, PRC-005-1 includes batteries, instrument transformers, DC control circuitry and communications in addition to the relays for BES protection systems. PRC-008 (UFLS) and

Organization	Yes or No	Question 5 Comment
	Negative	PRC-011 (UVLS) are ambiguous as to whether non-relay components are included in those standards. The new PRC-005-2 includes these non-relay components into UFLS and UVLS. The problem is, for UFLS and UVLS, these non-relay components are mostly distribution class equipment; hence, the result of this version 2 standard will be inclusion of most distribution class protection system components into PRC-005-2. This is a huge expansion of the scope of equipment covered by the standard with negligible benefit to BES reliability.
Response: Thank you for your comments. Section 202 of the NERC Rules of Procedure defines "Reliability Standard" as "a requirement to provide for reliable operation of the bulk power system …" The requirements regarding maintenance of Protection Systems for UFLS and UVLS directly support this definition.		
Beaches Energy Services (1)	Ballot Comment - Negative	We believe that there is an unnecessary expansion of the scope of equipment covered by this standard into the distribution system related to UVLS and UFLS. Currently, PRC-005-1 includes batteries, instrument transformers, DC control circuitry and communications in addition to the relays for BES protection systems. PRC-008 (UFLS) and PRC-011 (UVLS) are ambiguous as to whether non-relay components are included in those standards. The new PRC-005-2 includes these non-relay components into UFLS and UVLS. The problem is, for UFLS and UVLS, these non-relay components are mostly distribution class equipment; hence, the result of this version 2 standard will be inclusion of most distribution class protection system components into PRC-005-2. This is a huge expansion of the scope of equipment covered by the standard with negligible benefit to BES reliability. We agree wholeheartedly with the inclusion of non-relay components for BES Protection Systems. It is critical that BES Protection Systems work and clear the fault (e.g., on > 100 kV Facilities). However, UFLS and UVLS are quite different. For an event requiring UFLS and UVLS operation, there are many, e.g., hundreds and possibly thousands of relays, that operate to shed load automatically and if a small percentage of those do not operate as expected, the impact is minimal. So, it is not important for BES reliability to include non-relay components of UFLS and UVLS in the PRC-005-2 standard. In addition, testing of protection systems on distribution circuits is difficult for distribution circuits that are radial in nature. For instance, testing trip coils of distribution breakers will likely result in service interruption to customers on that distribution circuit in order to test the breaker or to perform break-before-make switching on the distribution system often required to manage maximum available fault current on the distribution system for worker safety, etc.. Hence, the standard would be sacrificing customer service quality for an infinitesimal increase in BES reliability. In addition, non-relay protection components operate much more frequently on distribution circuits than on Transmission Facilities due to more frequent failures due to trees, animals, lightning, traffic accidents, etc., and have much less of a need for testing since they are operationally tested.
Response: Thank you for your comments. Section 202 of the NERC Rules of Procedure defines "Reliability Standard" as "a requirement to provide for reliable operation of the bulk power system …" The requirements regarding maintenance of Protection Systems for UFLS and UVLS directly support this definition.		
Keys Energy Services (1)	Ballot Comment -	1. KEYS believes that there is an unnecessary expansion of the scope of equipment covered by this standard into the distribution system related to UVLS and UFLS. Currently, PRC-005-1 includes batteries, instrument

Organization	Yes or No	Question 5 Comment
	Negative	transformers, DC control circuitry and communications in addition to the relays for BES protection systems. PRC-008 (UFLS) and PRC-011 (UVLS) are ambiguous as to whether non-relay components are included in those standards. The new PRC-005-2 includes these non-relay components into UFLS and UVLS. The problem is, for UFLS and UVLS, these non-relay components are mostly distribution class equipment; hence, the result of this version 2 standard will be inclusion of most distribution class protection system components into PRC-005-2. This is a huge expansion of the scope of equipment covered by the standard with negligible benefit to BES reliability. KEYS agrees wholeheartedly with the inclusion of non-relay components for BES Protection Systems. It is critical that BES Protection Systems work and clear the fault (e.g., on > 100 kV Facilities). However, UFLS and UVLS are quite different. For an event requiring UFLS and UVLS operation, there are many, e.g., hundreds and possibly thousands of relays, that operate to shed load automatically and if a small percentage of those do not operate as expected, the impact is minimal. So, it is not important for BES reliability to include non-relay components of UFLS and UVLS in the PRC-005-2 standard. In addition, testing of protection systems on distribution circuits is difficult for distribution circuits that are radial in nature. For instance, testing trip coils of a distribution breakers will likely results in service interruption to customers on that distribution circuit in order to test the breaker or to perform break-before-make switching on the distribution system often required to manage maximum available fault current on the distribution system for worker safety, etc.. Hence, the standard would be sacrificing customer service quality for an infinitesimal increase in BES reliability. In addition, non-relay protection components operate much more frequently on distribution circuits than on transmission Facilities due to more frequent failures due to trees, animals, lightning, traffic accidents, etc., and have much less of a need for testing since they are operationally tested. 2. As another comment, station service transformers are not BES Elements and should not be part of the Applicability - they are radial serving only load.
Response: Thank you for your comments. 1. Section 202 of the NERC Rules of Procedure defines “Reliability Standard” as “a requirement to provide for reliable operation of the bulk power system …” The requirements regarding maintenance of Protection Systems for UFLS and UVLS directly support this definition. 2. The generator-connected station service transformers are often connected to the generator bus directly without an interposing breaker; thus, the Protection Systems on these transformers will trip the generator as discussed in 4.2.5.1. System connected station service transformers were removed from the Applicability in a previous draft.		
Lakeland Electric (3)	Ballot Comment - Negative	1. LAK believes that there is an unnecessary expansion of the scope of equipment covered by this standard into the distribution system related to UVLS and UFLS. Currently, PRC-005-1 includes batteries, instrument transformers, DC control circuitry and communications in addition to the relays for BES protection systems. PRC-008 (UFLS) and PRC-011 (UVLS) are ambiguous as to whether non-relay components are included

Organization	Yes or No	Question 5 Comment
		in those standards. The new PRC-005-2 includes these non-relay components into UFLS and UVLS. The problem is, for UFLS and UVLS, these non-relay components are mostly distribution class equipment; hence, the result of this version 2 standard will be inclusion of most distribution class protection system components into PRC-005-2. This is a huge expansion of the scope of equipment covered by the standard with negligible benefit to BES reliability. LAK agrees wholeheartedly with the inclusion of non-relay components for BES Protection Systems. It is critical that BES Protection Systems work and clear the fault (e.g., on > 100 kV Facilities). However, UFLS and UVLS are quite different. For an event requiring UFLS and UVLS operation, there are many, e.g., hundreds and possibly thousands of relays, that operate to shed load automatically and if a small percentage of those do not operate as expected, the impact is minimal. So, it is not important for BES reliability to include non-relay components of UFLS and UVLS in the PRC-005-2 standard. In addition, testing of protection systems on distribution circuits is difficult for distribution circuits that are radial in nature. For instance, testing trip coils of a distribution breakers will likely results in service interruption to customers on that distribution circuit in order to test the breaker or to perform break-before-make switching on the distribution system often required to manage maximum available fault current on the distribution system for worker safety, etc.. Hence, the standard would be sacrificing customer service quality for an infinitesimal increase in BES reliability. In addition, non-relay protection components operate much more frequently on distribution circuits than on transmission Facilities due to more frequent failures due to trees, animals, lightning, traffic accidents, etc., and have much less of a need for testing since they are operationally tested. 2. As another comment, station service transformers are not BES Elements and should not be part of the Applicability - they are radial serving only load.
Response: Thank you for your comments. 1. Section 202 of the NERC Rules of Procedure defines “Reliability Standard” as “a requirement to provide for reliable operation of the bulk power system …” The requirements regarding maintenance of Protection Systems for UFLS and UVLS directly support this definition. 2. The generator-connected station service transformers are often connected to the generator bus directly without an interposing breaker; thus, the Protection Systems on these transformers will trip the generator as discussed in 4.2.5.1. System connected station service transformers were removed from the Applicability in a previous draft.		
City of Green Cove Springs (3)	Ballot Comment - Negative	1. GCS believes that there is an unnecessary expansion of the scope of equipment covered by this standard into the distribution system related to UVLS and UFLS. Currently, PRC-005-1 includes batteries, instrument transformers, DC control circuitry and communications in addition to the relays for BES protection systems. PRC-008 (UFLS) and PRC-011 (UVLS) are ambiguous as to whether non-relay components are included in those standards. The new PRC-005-2 includes these non-relay components into UFLS and UVLS. The problem is, for UFLS and UVLS, these non-relay components are mostly distribution class equipment;

Organization	Yes or No	Question 5 Comment
		hence, the result of this version 2 standard will be inclusion of most distribution class protection system components into PRC-005-2. This is a huge expansion of the scope of equipment covered by the standard with negligible benefit to BES reliability. GCS agrees wholeheartedly with the inclusion of non-relay components for BES Protection Systems. It is critical that BES Protection Systems work and clear the fault (e.g., on > 100 kV Facilities). However, UFLS and UVLS are quite different. For an event requiring UFLS and UVLS operation, there are many, e.g., hundreds and possibly thousands of relays, that operate to shed load automatically and if a small percentage of those do not operate as expected, the impact is minimal. So, it is not important for BES reliability to include non-relay components of UFLS and UVLS in the PRC-005-2 standard. In addition, testing of protection systems on distribution circuits is difficult for distribution circuits that are radial in nature. For instance, testing trip coils of a distribution breakers will likely results in service interruption to customers on that distribution circuit in order to test the breaker or to perform break-before-make switching on the distribution system often required to manage maximum available fault current on the distribution system for worker safety, etc.. Hence, the standard would be sacrificing customer service quality for an infinitesimal increase in BES reliability. In addition, non-relay protection components operate much more frequently on distribution circuits than on transmission Facilities due to more frequent failures due to trees, animals, lightning, traffic accidents, etc., and have much less of a need for testing since they are operationally tested. 2. As another comment, station service transformers are not BES Elements and should not be part of the Applicability - they are radial serving only load.
Response: Thank you for your comments. 1. Section 202 of the NERC Rules of Procedure defines “Reliability Standard” as “a requirement to provide for reliable operation of the bulk power system …” The requirements regarding maintenance of Protection Systems for UFLS and UVLS directly support this definition. 2. The generator-connected station service transformers are often connected to the generator bus directly without an interposing breaker; thus, the Protection Systems on these transformers will trip the generator as discussed in 4.2.5.1. System connected station service transformers were removed from the Applicability in a previous draft.		
Gainesville Regional Utilities (1)	Ballot Comment - Negative	GRU (GVL) agrees with the following comments provided by the FMPA: 1. FMPA believes that there is an unnecessary expansion of the scope of equipment covered by this standard into the distribution system related to UVLS and UFLS. Currently, PRC-005-1 includes batteries, instrument transformers, DC control circuitry and communications in addition to the relays for BES protection systems. PRC-008 (UFLS) and PRC-011 (UVLS) are ambiguous as to whether non-relay components are included in those standards. The new PRC-005-2 includes these non-relay components into UFLS and UVLS. The problem is, for UFLS and UVLS, these non-relay components are mostly distribution class equipment; hence, the result of this version 2 standard will be inclusion of most distribution class protection system

Organization	Yes or No	Question 5 Comment
		components into PRC-005-2. This is a huge expansion of the scope of equipment covered by the standard with negligible benefit to BES reliability. FMPA agrees wholeheartedly with the inclusion of non-relay components for BES Protection Systems. It is critical that BES Protection Systems work and clear the fault (e.g., on > 100 kV Facilities). However, UFLS and UVLS are quite different. For an event requiring UFLS and UVLS operation, there are many, e.g., hundreds and possibly thousands of relays, that operate to shed load automatically and if a small percentage of those do not operate as expected, the impact is minimal. So, it is not important for BES reliability to include non-relay components of UFLS and UVLS in the PRC-005-2 standard. In addition, testing of protection systems on distribution circuits is difficult for distribution circuits that are radial in nature. For instance, testing trip coils of a distribution breakers will likely results in service interruption to customers on that distribution circuit in order to test the breaker or to perform break-before-make switching on the distribution system often required to manage maximum available fault current on the distribution system for worker safety, etc.. Hence, the standard would be sacrificing customer service quality for an infinitesimal increase in BES reliability. In addition, non-relay protection components operate much more frequently on distribution circuits than on transmission Facilities due to more frequent failures due to trees, animals, lightning, traffic accidents, etc., and have much less of a need for testing since they are operationally tested. 2. As another comment, station service transformers are not BES Elements and should not be part of the Applicability - they are radial serving only load.
Response: Thank you for your comments. 1. Section 202 of the NERC Rules of Procedure defines “Reliability Standard” as “a requirement to provide for reliable operation of the bulk power system …” The requirements regarding maintenance of Protection Systems for UFLS and UVLS directly support this definition. 2. The generator-connected station service transformers are often connected to the generator bus directly without an interposing breaker; thus, the Protection Systems on these transformers will trip the generator as discussed in 4.2.5.1. System connected station service transformers were removed from the Applicability in a previous draft.		
Alliant Energy		1. If PRC-005-2 is going to incorporate PRC-008 (UFLS) and PRC-011 (UVLS) the Purpose needs to be revised to include Distribution Protection Systems designed to protect the BES. 2. We do not believe a distribution relaying system, designed to protect the distribution assets, that may open a transmission element (ie; breaker failure) should be considered part of the BES Protection System. R1 should add the following sentence “Distribution Protection Systems intended solely for the protection of distribution assets are not included as a BES Protection System, even if they may open a BES Element.” 3. Table 1-5 (Component Type - Control Circuitry) Item 4 “Unmonitored control circuitry associated with protective functions” require a 12 calendar year maximum maintenance interval. We believe UFLS and

Organization	Yes or No	Question 5 Comment
		UVLS control circuitry should be exempted from this requirement. It would take multiple failures to have any impact, and the impact on the BES would be minimal.
Response: Thank you for your comments. 1. There is no distinction in the purpose between "Distribution Protection Systems" and "Transmission Protection Systems". The SDT believes that the Applicability appropriately describes both the entities and the facilities. 2. The SDT modified Applicability 4.2.1 for better consistency with the interpretation that is reflected in PRC-005-1a, and believes that this change may address your concern. 3. The Table 1-5 activities for UFLS/UVLS are constrained to those activities that the SDT considers to be appropriate relative to the reliability impact of these applications. Please see Section 15.3 of the Supplemental Reference Document for additional discussion on this topic.		
Y-W Electric Association, Inc. (4)	Ballot Comment - Affirmative	Y-WEA thanks the SDT for its long, hard work on this standard and for its consideration of previous comments.
Response: Thank you for your comments.		
BGE		No comments.
PNGC Power		Thank you for the opportunity to comment on the draft Standard PRC-005-2 – Protection System Maintenance. We appreciate the work that NERC has put into a new standard to encapsulate and replace the current PRC-005, PRC-008, PRC-011 and PRC-017. But, we believe that the draft Standard needs one important revision before the NERC Board of Trustees should approve it. Specifically, NERC should revise the draft version of PRC-005-2 so that the beginning of Section 4.2 reads as follows: *"4.2. Facilities:* *Protection Systems that (1) are not facilities used in the local distribution of electricity, (2) are facilities and control systems necessary for operating an interconnected electric energy transmission network, and (3) are any of the following:"* This revision is necessary to capture the limits that Congress placed on FERC, NERC, and the Regional Entities in developing and enforcing mandatory reliability standards. Specifically, Section 215(i) of the Federal Power Act provides that the Electric Reliability Organization (ERO) "shall have authority to develop and enforce compliance

Organization	Yes or No	Question 5 Comment
		with reliability standards *for only* the Bulk-Power System." And, Section 215(a)(1) of the statute defines the term "Bulk-Power System" or "BPS" as: (A) facilities and control systems *necessary* for operating an interconnected electric energy transmission network (or any portion thereof); and (B) electric energy from generation facilities needed to maintain transmission system reliability. *The term does not include facilities used in the local distribution of electric energy*." With this language, Congress expressly limited FERC, NERC, and the Regional Entities' jurisdiction with regard to local distribution facilities as well as those facilities not necessary for operating a transmission network. Given that these facilities are statutorily excluded from the definition of the BPS, reliability standards may not be developed or enforced for facilities used in local distribution. In Order No. 672, FERC adopted the statutory definition of the BPS. In Order No. 743-A, issued earlier this year, the Commission acknowledged that "Congress has specifically exempted 'facilities used in the local distribution of electric energy'" from the BPS definition. FERC also held that to the extent *any* facility is a facility used in the local distribution of electric energy, it is exempted from the requirements of Section 215. In Order No. 743-A, FERC delegated to NERC the task of proposing for FERC approval criteria and a process to identify the facilities used in local distribution that will be excluded from NERC and FERC regulation. The critical first step in this process is for NERC to propose criteria for approval by FERC to determine which facilities are used in local distribution, and are therefore <u>not</u> BPS facilities. The criteria to be developed by NERC must exclude any facilities that are used in the local distribution of electric energy, because all such facilities are beyond the scope of the statutory definition of the BPS, which establishes the limit of FERC and NERC jurisdiction. Accordingly, it is critical that NERC draft the new PRC-005-2 standard to expressly exclude facilities used in local distribution. NERC must also expressly exclude from PRC-005-2 those facilities "not necessary for operating an interconnected electric energy transmission network (or any portion thereof)". Similar to the local distribution exclusion, the facilities not necessary for operating a transmission network are not part of the BPS and therefore must be expressly excluded from the standard. We understand, but disagree with, the argument that, because the FPA clearly excludes local distribution facilities and facilities necessary for operating an interconnected electric transmission network from FERC, NERC, and Regional Entity jurisdiction, it is not necessary to expressly exclude these facilities again in reliability standards. This approach might be legally accurate, but could lead to significant confusion for entities attempting to implement the new PRC-005-2 standard. There are numerous examples of Regional Entities, particularly WECC, attempting to assert jurisdiction over such facilities, and regulated entities face significant uncertainty as to which facilities they should consider as within jurisdiction. Clarifying FERC, NERC, and Regional Entity

Organization	Yes or No	Question 5 Comment
		jurisdiction in the BES definition, even if such clarification is already provided in the FPA, would avoid such problems under the new PRC-005-2 standard. Again, we appreciate the work NERC has put in so far on a new Standard. We look forward to working within the drafting process to help implement our recommended revision.
Response: Thank you for your comments. The SDT has revised R1 to refer to Applicability 4.2. The SDT believes that your comments are otherwise already reflected in the Standard, and that no further changes are necessary. The Standard currently addresses maintenance of all Protection Systems that are applied on or to protect BES elements, as well as maintenance of UFLS installed for the BES per PRC-007, UVLS installed on or for the BES per PRC-010, and Special Protection Systems installed on or for the BES per PRC-012, PRC-013, PRC-014, and PRC-015. Therefore, the Standard is already constrained as you suggest. Additionally, Section 202 of the NERC Rules of Procedure defines "Reliability Standard" as "a requirement to provide for reliable operation of the bulk power system …" The requirements regarding maintenance of Protection Systems for UFLS and UVLS directly support this definition.		
ReliabilityFirst	Ballot Comment - Affirmative	ReliabilityFirst votes affirmative but offers the following suggestions/comments: 1. R3 should be split into two separate requirements since there are two distinct actions being requested (e.g. "…shall implement and follow its PSMP" is one requirement and "… shall initiate resolution of any identified maintenance correctable issues" is the second requirement. 2. There are a number of terms which are defined only for the use of the PRC-005-2 standard which will not be moved to the Glossary of Terms., and even though I completely agree with this concept, I believe this concept is not mentioned nor is it allowed per the NERC Standard Processes Manual.
Response: Thank you for your comments. 1. The SDT believes that the two activities are intertwined and should remain within a single requirement. 2. The SDT has been advised by NERC Standards staff that this is acceptable, and has adopted the methodology for doing so as suggested by staff.		

Standard Development Roadmap

This section is maintained by the drafting team during the development of the standard and will be removed when the standard becomes effective.

Development Steps Completed:

1. Standards Committee approves SAR for posting on June 5, 2007.
2. The SAR was posted for comment from June 11, 2007–July 10, 2007.
3. The SC approves development of the standard on August 13, 2007.
4. First posting of revised standard on July 24, 2009.
5. Second posting of revised standard on June 11, 2010
6. Third posting of revised standard on November 17, 2010
7. Fourth posting of revised standard on April 13, 2011

Description of Current Draft:
This is the fifth draft of the Standard. This standard merges previous standards PRC-005-1, PRC-008-0, PRC-011-0, and PRC-017-0. It also addresses FERC comments from Order 693, and addresses observations from the NERC System Protection and Control Task Force, as presented in *NERC SPCTF Assessment of Standards: PRC-005-1 — Transmission and Generation Protection System Maintenance and Testing, PRC-008-0 — Underfrequency Load Shedding Equipment Maintenance Programs, PRC-011-0 — UVLS System Maintenance and Testing, PRC-017-0 — Special Protection System Maintenance and Testing.*

Future Development Plan:

Anticipated Actions	Anticipated Date
1. Post for combined 30-day comment and ballot.	July 5 – August 4, 2011
2. Conduct successive ballot	July 26 – August 4, 2011
3. Drafting Team Responds to Comments	August 4 – September 6, 2011

Definitions of Terms Used in Standard

This section includes all newly defined or revised terms used in the proposed standard. Terms already defined in the Reliability Standards Glossary of Terms are not repeated here. New or revised definitions listed below become approved when the proposed standard is approved. When the standard becomes effective, these defined terms will be removed from the individual standard and added to the Glossary.

Protection System Maintenance Program (PSMP) — An ongoing program by which Protection System components are kept in working order and proper operation of malfunctioning components is restored. A maintenance program for a specific component includes one or more of the following activities:

- Verify — Determine that the component is functioning correctly.
- Monitor — Observe the routine in-service operation of the component.
- Test — Apply signals to a component to observe functional performance or output behavior, or to diagnose problems.
- Inspect — Detect visible signs of component failure, reduced performance and degradation.
- Calibrate — Adjust the operating threshold or measurement accuracy of a measuring element to meet the intended performance requirement.

Protection System (NERC Board of Trustees Approved Definition)

- Protective relays which respond to electrical quantities,
- communications systems necessary for correct operation of protective functions,
- voltage and current sensing devices providing inputs to protective relays,
- station dc supply associated with protective functions (including station batteries, battery chargers, and non-battery-based dc supply), and
- control circuitry associated with protective functions through the trip coil(s) of the circuit breakers or other interrupting devices.

The following terms are defined for use only within PRC-005-2, and should remain with the standard upon approval rather than being moved to the Glossary of Terms.

Maintenance Correctable Issue – Failure of a component to operate within design parameters such that the deficiency cannot be corrected during the performance of the maintenance activity. Therefore this issue requires follow-up corrective action.

Segment – Protection Systems or components of a consistent design standard, or a particular model or type from a single manufacturer that typically share other common elements. Consistent performance is expected across the entire population of a segment. A segment must contain at least sixty (60) individual components.

Component Type - Any one of the five specific elements of the Protection System definition.

Component – A component is any individual discrete piece of equipment included in a Protection System, including but not limited to a protective relay or current sensing device. The designation of what constitutes a control circuit component is very dependent upon how an entity performs and tracks the testing of the control circuitry. Some entities test their control circuits on a breaker basis whereas others test their circuitry on a local zone of protection basis. Thus, entities are allowed the latitude to designate

their own definitions of control circuit components. Another example of where the entity has some discretion on determining what constitutes a single component is the voltage and current sensing devices, where the entity may choose either to designate a full three-phase set of such devices or a single device as a single component.

Countable Event – A component which has failed and requires repair or replacement, any condition discovered during the maintenance activities in Tables 1-1 through 1-5 which requires corrective action, or a Misoperation attributed to hardware failure or calibration failure. Misoperations due to product design errors, software errors, relay settings different from specified settings, Protection System component configuration errors, or Protection System application errors are not included in Countable Events.

A. Introduction

1. Title: **Protection System Maintenance**

2. Number: PRC-005-2

3. Purpose: To document and implement programs for the maintenance of all Protection Systems affecting the reliability of the Bulk Electric System (BES) so that these Protection Systems are kept in working order.

4. Applicability:

4.1. Functional Entities:

4.1.1 Transmission Owners

4.1.2 Generator Owners

4.1.3 Distribution Providers

4.2. Facilities:

4.2.1 Protection Systems that are installed for the purpose of detecting faults on BES Elements (lines, buses, transformers, etc.)

4.2.2 Protection Systems used for underfrequency load-shedding systems installed per ERO underfrequency load-shedding requirements.

4.2.3 Protection Systems used for undervoltage load-shedding systems installed to prevent system voltage collapse or voltage instability for BES reliability.

4.2.4 Protection Systems installed as a Special Protection System (SPS) for BES reliability.

4.2.5 Protection Systems for generator Facilities that are part of the BES, including:

4.2.5.1 Protection Systems that act to trip the generator either directly or via generator lockout or auxiliary tripping relays.

4.2.5.2 Protection Systems for generator step-up transformers for generators that are part of the BES.

4.2.5.3 Protection Systems for transformers connecting aggregated generation, where the aggregated generation is part of the BES (e.g., transformers connecting facilities such as wind-farms to the BES).

4.2.5.4 Protection Systems for generator-connected station service transformers for generators that are part of the BES.

5. Effective Date: See Implementation Plan

B. Requirements

R1. Each Transmission Owner, Generator Owner, and Distribution Provider shall establish a Protection System Maintenance Program (PSMP) for its Protection Systems identified in Section 4.2. *Violation Risk Factor: Medium] [Time Horizon: Long Term Planning]*

The PSMP shall:

1.1. Address all Protection System **component types.**

1.2. Identify which maintenance method (time-based,

Component Type *- Any one of the five specific elements of the Protection System definition.*

performance-based (per PRC-005 Attachment A), or a combination) is used to address each Protection System component type. All batteries associated with the station dc supply component type of a Protection System shall be included in a time-based program as described in Table 1-4.

1.3. Identify the associated maintenance intervals for time-based programs, to be no less frequent than the intervals established in Table 1-1 through 1-5 and Table 2.

1.4. Include all applicable monitoring attributes and related maintenance activities applied to each Protection System component type consistent with the maintenance intervals specified in Tables 1-1 through 1-5 and Table 2.

Maintenance Correctable Issue - *Failure of a component to operate within design parameters* such that the deficiency cannot be corrected during the performance of the maintenance activity. *Therefore this issue requires follow-up corrective action.*

R2. Each Transmission Owner, Generator Owner, and Distribution Provider that uses performance-based maintenance intervals in its PSMP shall follow the procedure established in PRC-005 Attachment A to establish and maintain its performance-based intervals. *[Violation Risk Factor: Medium] [Time Horizon: Operations Planning]*

R3. Each Transmission Owner, Generator Owner, and Distribution Provider shall implement and follow its PSMP and initiate resolution of any identified **maintenance correctable issues**. *[Violation Risk Factor: High] [Time Horizon: Operations Planning]*

C. Measures

M1. Each Transmission Owner, Generator Owner and Distribution Provider shall have a current documented Protection System Maintenance Program that addresses all component types of its Protection Systems, as required by Requirement R1. For each Protection System component type, the documentation shall include the type of maintenance program applied (time-based, performance-based, or a combination of these maintenance methods), maintenance activities, maintenance intervals, and, for component types that use monitoring to extend the intervals, the appropriate monitoring attributes as specified in Requirement R1, Parts 1.1 through 1.4.

M2. Each Transmission Owner, Generator Owner, and Distribution Provider that uses a performance-based maintenance program shall have evidence that its current performance-based maintenance program is in accordance with Requirement R2, which may include but is not limited to equipment lists, dated maintenance records, and dated analysis records and results.

M3. Each Transmission Owner, Generator Owner, and Distribution Provider shall have evidence that it has implemented the Protection System Maintenance Program and initiated resolution of identified Maintenance Correctable Issues in accordance with Requirement R3, which may include but is not limited to dated maintenance records, dated maintenance summaries, dated check-off lists, dated inspection records, or dated work orders.

D. Compliance

1. Compliance Monitoring Process

1.1. Compliance Monitoring Responsibility

Regional Entity

1.2. Compliance Monitoring and Enforcement Processes:

Compliance Audits

Self-Certifications

Spot Checking

Compliance Violation Investigations

Self-Reporting

Complaints

1.3. Data Retention

The Transmission Owner, Generator Owner, and Distribution Provider shall each keep data or evidence to demonstrate compliance as identified below unless directed by its Compliance Enforcement Authority to retain specific evidence for a longer period of time as part of an investigation.

For Requirement R1, the Transmission Owner, Generator Owner, and Distribution Provider shall each keep its current dated Protection System Maintenance Program including the documentation that specifies the type of maintenance program applied for each Protection System component type.

For Requirement R2 and Requirement R3, the Transmission Owner, Generator Owner, and Distribution Provider shall each keep documentation of the two most recent performances of each distinct maintenance activity for the Protection System **components**, or all performances of each distinct maintenance activity for the Protection System component since the previous scheduled audit date, whichever is longer.

Component – *A component is any individual discrete piece of equipment included in a Protection System, including but not limited to a protective relay or current sensing device. The designation of what constitutes a control circuit component is very dependent upon how an entity performs and tracks the testing of the control circuitry. Some entities test their control circuits on a breaker basis whereas others test their circuitry on a local zone of protection basis. Thus, entities are allowed the latitude to designate their own definitions of control circuit components. Another example of where the entity has some discretion on determining what constitutes a single component is the voltage and current sensing devices, where the entity may choose either to designate a full three-phase set of such devices or a single device as a single component.*

The Compliance Enforcement Authority shall keep the last periodic audit report and all requested and submitted subsequent compliance records.

1.4. Additional Compliance Information

None.

2. Violation Severity Levels

Requirement Number	Lower VSL	Moderate VSL	High VSL	Severe VSL
R1	The responsible entity's PSMP failed to specify whether one component type is being addressed by time-based or performance-based maintenance, or a combination of both. (Part 1.2)	The responsible entity's PSMP failed to address one component type included in the definition of 'Protection System' (Part 1.1) OR The responsible entity's PSMP failed to specify whether two component types are being addressed by time-based or performance-based maintenance, or a combination of both. (Part 1.2)	The responsible entity's PSMP failed to address two component types included in the definition of 'Protection System' (Part 1.1) OR The responsible entity's PSMP failed to include station batteries in a time-based program (Part 1.2) OR The responsible entity failed to include all maintenance activities or intervals relevant for the identified monitoring attributes specified in Tables 1-1 through 1-5 and Table 2. (Part 1.3 and 1.4)	The responsible entity has not established a PSMP. OR The responsible entity's PSMP failed to address three or more component types included in the definition of 'Protection System' (Part 1.1) OR The responsible entity failed to specify whether three or more component types are being addressed by time-based or performance-based maintenance, or a combination of both. (Part 1.2).
R2	The responsible entity uses performance-based maintenance intervals in its PSMP but has: 1) Failed to reduce countable events to less than 4% within three years OR 2) Failed to annually document program activities, results, maintenance dates, or countable events for 5% or less of components in any individual segment	NA	The responsible entity uses performance-based maintenance intervals in its PSMP but has failed to reduce countable events to less than 4% within four years.	The responsible entity uses performance-based maintenance intervals in its PSMP but has: 1) Failed to establish the entire technical justification described within R2 for the initial use of the performance-based PSMP OR 2) Failed to reduce countable events to less than 4% within five years OR 3) Failed to annually document program activities, results, maintenance dates, or countable

Requirement Number	Lower VSL	Moderate VSL	High VSL	Severe VSL
				events for over 5% of components in any individual segment OR 4) Maintained a segment with less than 60 components OR 5) Failed to: • Annually update the list of components, OR • Perform maintenance on the greater of 5% of the segment population or 3 components, OR • Annually analyze the program activities and results for each segment.
R3	The responsible entity has failed to implement and follow scheduled program on 5% or less of total Protection System components. OR The responsible entity has failed to initiate resolution on 5% or less of identified maintenance correctable issues.	The responsible entity has failed to implement and follow scheduled program on greater than 5%, but no more than 10% of total Protection System components OR The responsible entity has failed to initiate resolution on greater than 5%, but less than or equal to 10% of identified maintenance correctable issues.	The responsible entity has failed to implement and follow scheduled program on greater than 10%, but no more than 15% of total Protection System components OR The responsible entity has failed to initiate resolution on greater than 10%, but less than or equal to 15% of identified.	The responsible entity has failed to implement and follow scheduled program on greater than 15% of total Protection System components OR The responsible entity has failed to initiate resolution on greater than 15% of identified maintenance correctable issues.

E. Regional Variances

None

F. Supplemental Reference Document

The following documents present a detailed discussion about determination of maintenance intervals and other useful information regarding establishment of a maintenance program.

1. PRC-005-2 Protection System Maintenance Supplementary Reference and FAQ — February 2011.

Version History

Version	Date	Action	Change Tracking
2	TBD	Complete revision, absorbing maintenance requirements from PRC-005-1, PRC-008-0, PRC-011-0, PRC-017	Complete revision

Table 1-1 Component Type - Protective Relay		
Component Attributes	**Maximum Maintenance Interval**[1]	**Maintenance Activities**
Any unmonitored protective relay not having all the monitoring attributes of a category below.	6 calendar years	Verify that settings are as specified For non-microprocessor relays: • Test and, if necessary calibrate For microprocessor relays: • Verify operation of the relay inputs and outputs that are essential to proper functioning of the Protection System. • Verify acceptable measurement of power system input values.
Monitored microprocessor protective relay with the following: • Internal self diagnosis and alarming (see Table 2). • Voltage and/or current waveform sampling three or more times per power cycle, and conversion of samples to numeric values for measurement calculations by microprocessor electronics. • Alarming for power supply failure (see Table 2).	12 calendar years	Verify: • Settings are as specified. • Operation of the relay inputs and outputs that are essential to proper functioning of the Protection System. • Acceptable measurement of power system input values.

[1] For the tables in this standard, a calendar year starts on the first day of a new year (January 1) after a maintenance activity has been completed. For the tables in this standard, a calendar month starts on the first day of the first month after a maintenance activity has been completed.

Monitored microprocessor protective relay with preceding row attributes and the following: • Ac measurements are continuously verified by comparison to an independent ac measurement source, with alarming for excessive error. (See Table 2) • Some or all binary or status inputs and control outputs are monitored by a process that continuously demonstrates ability to perform as designed, with alarming for failure. (See Table 2) • Alarming for change of settings. (See Table 2)	12 calendar years	Verify only the unmonitored relay inputs and outputs that are essential to proper functioning of the Protection System.

Table 1-2 Component Type - Communications Systems		
Component Attributes	**Maximum Maintenance Interval**	**Maintenance Activities**
Any unmonitored communications system necessary for correct operation of protective functions, and not having all the monitoring attributes of a category below.	3 calendar months	Verify that the communications system is functional.
	6 calendar years	Verify that the channel meets performance criteria pertinent to the communications technology applied (e.g signal level, reflected power, or data error rate). Verify essential signals to and from other Protection System components.
Any communications system with continuous monitoring or periodic automated testing for the presence of the channel function, and alarming for loss of function. (See Table 2)	12 calendar years	Verify that the channel meets performance criteria pertinent to the communications technology applied (e.g signal level, reflected power, or data error rate). Verify essential signals to and from other Protection System components.

Any communications system with continuous monitoring or periodic automated testing for the performance of the channel using criteria pertinent to the communications technology applied (e.g. signal level, reflected power, or data error rate, and alarming for excessive performance degradation). (See Table 2)	No periodic maintenance specified	None.

Table 1-3 Component Type - Voltage and Current Sensing Devices Providing Inputs to Protective Relays		
Component Attributes	**Maximum Maintenance Interval**	**Maintenance Activities**
Any voltage and current sensing devices not having monitoring attributes of the category below.	12 calendar years	Verify that current and voltage signal values are provided to the protective relays.
Voltage and Current Sensing devices connected to microprocessor relays with AC measurements are continuously verified by comparison of sensing input value as measured by the microprocessor relay to an independent ac measurement source, with alarming for unacceptable error or failure (see Table 2).	No periodic maintenance specified	None.

Table 1-4(a) Component Type – Protection System Station dc Supply Using Vented Lead-Acid (VLA) Batteries		
Component Attributes	**Maximum Maintenance Interval**	**Maintenance Activities**
Protection System Station dc supply using **Vented Lead-Acid (VLA) batteries** not having monitoring attributes of Table 1-4(f). Protection System Station dc supply for distribution breakers for UFLS or UVLS are excluded (see Table 1-4(e)).	3 Calendar Months	Verify: • Station dc supply voltage Inspect: • Electrolyte level • For unintentional grounds
	18 Calendar Months	Verify: • Float voltage of battery charger • Battery continuity • Battery terminal connection resistance • Battery intercell or unit-to-unit connection resistance Inspect: • Cell condition of all individual battery cells where cells are visible – or measure battery cell/unit internal ohmic values where the cells are not visible • Physical condition of battery rack
	18 Calendar Months -or- 6 Calendar Years	Verify that the station battery can perform as designed by evaluating the measured cell/unit internal ohmic values to station battery baseline. -or- Verify that the station battery can perform as designed by conducting a performance, service, or modified performance capacity test of the entire battery bank.

Table 1-4(b) Component Type – Protection System Station dc Supply Using Valve-Regulated Lead-Acid (VRLA) Batteries		
Component Attributes	**Maximum Maintenance Interval**	**Maintenance Activities**
Protection System Station dc supply **with Valve Regulated Lead-Acid (VRLA) batteries** not having monitoring attributes of Table 1-4(f). Station dc supply for distribution breakers for UFLS or UVLS are excluded (see Table 1-4(e)).	3 Calendar Months	Verify: • Station dc supply voltage Inspect: • For unintentional grounds
	6 Calendar Months	Inspect: • Condition of all individual units by measuring battery cell/unit internal ohmic values.
	18 Calendar Months	Verify: • Float voltage of battery charger • Battery continuity • Battery terminal connection resistance • Battery intercell or unit-to-unit connection resistance Inspect: • Physical condition of battery rack
	6 Calendar Months -or- 3 Calendar Years	Verify that the station battery can perform as designed by evaluating the measured cell/unit internal ohmic values to station battery baseline. -or- Verify that the station battery can perform as designed by conducting a performance, service, or modified performance capacity test of the entire battery bank

Table 1-4(c) Component Type – Protection System Station dc Supply Using Nickel-Cadmium (NiCad) Batteries		
Component Attributes	**Maximum Maintenance Interval**	**Maintenance Activities**
Protection System Station dc supply **Nickel-Cadmium (NiCad) batteries** not having monitoring attributes of Table 1-4(f). Station dc supply for distribution breakers for UFLS or UVLS are excluded (see Table 1-4(e)).	3 Calendar Months	Verify: • Station dc supply voltage Inspect: • Electrolyte level • For unintentional grounds
	18 Calendar Months	Verify: • Float voltage of battery charger • Battery continuity • Battery terminal connection resistance • Battery intercell or unit-to-unit connection resistance Inspect: • Cell condition of all individual battery cells. • Physical condition of battery rack
	6 Calendar Years	Verify that the station battery can perform as designed by conducting a performance service, or modified performance capacity test of the entire battery bank.

Table 1-4(d) Component Type – Protection System Station dc Supply Using Non Battery Based Energy Storage		
Component Attributes	**Maximum Maintenance Interval**	**Maintenance Activities**
Any Protection System station dc supply not using a battery and not having monitoring attributes of Table 1-4(f). Protection System Station dc supply for distribution breakers for UFLS, UVLS and SPS are excluded (see Table 1-4(e)).	3 Calendar Months	Verify: • Station dc supply voltage Inspect: • For unintentional grounds
	18 Calendar Months	Inspect: Condition of non-battery based dc supply
	6 Calendar Years	Verify that the dc supply can perform as designed when ac power is not present.

Table 1-4(e) Component Type – Protection System Station dc Supply for non-BES Interrupting Device		
Component Attributes	**Maximum Maintenance Interval**	**Maintenance Activities**
Any Protection System dc supply for tripping only non-BES interrupting devices as part of a UFLS, UVLS or SPS system and not having monitoring attributes of Table 1-4(f).	When control circuits are verified (See Table 1-5)	Verify: • Station dc supply voltage

Table 1-4(f) Exclusions for Protection System Station dc Supply Monitoring Devices and Systems		
Component Attributes	**Maximum Maintenance Interval**	**Maintenance Activities**
Any station dc supply with high and low voltage monitoring and alarming of the battery charger voltage to detect charger overvoltage and charger failure. (See Table 2)	No periodic maintenance specified	No periodic verification of station dc supply voltage is required.
Any battery based station dc supply with electrolyte level monitoring and alarming in every cell (See Table 2)		No periodic inspection of the electrolyte level for each cell is required.
Any station dc supply with unintentional dc ground monitoring and alarming (See Table 2)		No periodic inspection of unintentional dc grounds is required.
Any station dc supply with charger float voltage monitoring and alarming to ensure correct float voltage is being applied on the station dc supply (See Table 2)		No periodic verification of float voltage of battery charger is required
Any battery based station dc supply with monitoring and alarming of battery string continuity (See Table 2)		No periodic verification of the battery continuity is required.
Any battery based station dc supply with monitoring and alarming of the intercell and/or terminal connection detail resistance of the entire battery (See Table 2)		No periodic verification of the intercell and terminal connection resistance is required.
Any lead acid battery based station dc supply with internal ohmic value monitoring, and evaluating present values relative to baseline internal ohmic values for every cell/unit (See Table 2)		.No periodic measurement and evaluation relative to baseline of battery cell/unit internal ohmic values is required to verify the station battery can perform as designed .
Any Valve Regulated Lead-Acid (VRLA) station battery with monitoring and alarming of each cell/unit internal Ohmic value. (See Table 2)		No periodic inspection of the condition of all individual units by measuring battery cell/unit internal ohmic values of a station VRLA battery is required.

Table 1-5 Component Type - Control Circuitry Associated With Protective Functions **Note:** Table requirements apply to all Control Circuitry components of Protection Systems, UVLS and UFLS Systems, and SPSs except as noted.		
Component Attributes	**Maximum Maintenance Interval**	**Maintenance Activities**
Trip coils or actuators of circuit breakers, interrupting devices, or mitigating devices (excluding UFLS or UVLS systems).	6 calendar years	Verify that each trip coil is able to operate the circuit breaker, interrupting device, or mitigating device.
Trip coils of circuit breakers and interrupting devices in UFLS or UVLS systems.	No periodic maintenance specified	None.
Electromechanical lockout and/or tripping auxiliary devices which are directly in a trip path from the protective relay to the interrupting device trip coil.	6 calendar years	Verify electrical operation of electromechanical trip and auxiliary devices.
Unmonitored control circuitry associated with protective functions.	12 calendar years	Verify all paths of the control and trip circuits.
Control circuitry whose continuity and energization or ability to operate are monitored and alarmed (See Table 2).	No periodic maintenance specified	None.

Table 2 – Alarming Paths and Monitoring In Tables 1-1 through 1-5, alarm attributes used to justify extended maximum maintenance intervals and/or reduced maintenance activities are subject to the following maintenance requirements		
Component Attributes	**Maximum Maintenance Interval**	**Maintenance Activities**
Any alarm path through which alarms in Tables 1-1 through 1-5 are conveyed from the alarm origin to the location where corrective action can be initiated, and not having all the attributes of the "Alarm Path with monitoring" category below. Alarms are reported within 24 hours of DETECTION to a location where corrective action can be initiated.	12 Calendar Years	Verify that the alarm path conveys alarm signals to a location where corrective action can be initiated.
Alarm Path with monitoring: The location where corrective action is taken receives an alarm within 24 hours for failure of any portion of the alarming path from the alarm origin to the location where corrective action can be initiated.	No periodic maintenance specified	No periodic maintenance specified.

PRC-005 — Attachment A

Criteria for a Performance-Based Protection System Maintenance Program

Purpose: To establish a technical basis for initial and continued use of a performance-based Protection System Maintenance Program (PSMP).

To establish the technical justification for the initial use of a performance-based PSMP:

1. Develop a list with a description of components included in each designated segment of the Protection System component population, with a minimum **segment** population of 60 components.
2. Maintain the components in each segment according to the time-based maximum allowable intervals established in Tables 1-1 through 1-5 until results of maintenance activities for the segment are available for a minimum of 30 individual components of the segment.

> **Segment** – *Protection Systems or components of a consistent design standard, or a particular model or type from a single manufacturer that typically share other common elements. Consistent performance is expected across the entire population of a segment. A segment must contain at least sixty (60) individual components.*

3. Document the maintenance program activities and results for each segment, including maintenance dates and countable events for each included component.
4. Analyze the maintenance program activities and results for each segment to determine the overall performance of the segment and develop maintenance intervals.
5. Determine the maximum allowable maintenance interval for each segment such that the segment experiences **countable events** on no more than 4% of the components within the segment, for the greater of either the last 30 components maintained or all components maintained in the previous year.

> **Countable Event** – *A component which has failed and requires repair or replacement, any condition discovered during the maintenance activities in Tables 1-1 through 1-5 which requires corrective action, or a Misoperation attributed to hardware failure or calibration failure. Misoperations due to product design errors, software errors, relay settings different from specified settings, Protection System component configuration errors, or Protection System application errors are not included in Countable Events.*

To maintain the technical justification for the ongoing use of a performance-based PSMP:

1. At least annually, update the list of Protection System components and segments and/or description if any changes occur within the segment.
2. Perform maintenance on the greater of 5% of the components (addressed in the performance based PSMP) in each segment or 3 individual components within the segment in each year.
3. For the prior year, analyze the maintenance program activities and results for each segment to determine the overall performance of the segment.

4. Using the prior year's data, determine the maximum allowable maintenance interval for each segment such that the segment experiences countable events on no more than 4% of the components within the segment, for the greater of either the last 30 components maintained or all components maintained in the previous year.
5. If the components in a Protection System segment maintained through a performance-based PSMP experience 4% or more countable events, develop, document, and implement an action plan to reduce the countable events to less than 4% of the segment population within 3 years.

Standard Development Roadmap

This section is maintained by the drafting team during the development of the standard and will be removed when the standard becomes effective.

Development Steps Completed:

1. Standards Committee approves SAR for posting on June 5, 2007.
2. The SAR was posted for comment from June 11, 2007–July 10, 2007.
3. The SC approves development of the standard on August 13, 2007.
4. First posting of revised standard on July 24, 2009.
5. Second posting of revised standard on June 11, 2010
6. Third posting of revised standard on November 17, 2010
7. Fourth posting of revised standard on April 13, 2011

Description of Current Draft:

This is the f~~our~~ifth draft of the Standard. This standard merges previous standards PRC-005-1, PRC-008-0, PRC-011-0, and PRC-017-0. It also addresses FERC comments from Order 693, and addresses observations from the NERC System Protection and Control Task Force, as presented in *NERC SPCTF Assessment of Standards: PRC-005-1 — Transmission and Generation Protection System Maintenance and Testing, PRC-008-0 — Underfrequency Load Shedding Equipment Maintenance Programs, PRC-011-0 — UVLS System Maintenance and Testing, PRC-017-0 — Special Protection System Maintenance and Testing.*

Future Development Plan:

Anticipated Actions	Anticipated Date
1. Post for combined 30-day comment and ballot.	~~1 April 12~~July 5 – August 4, 2011
2. Conduct successive ballot	~~May 2 – May 12~~July 26 – August 4, 2011
3. Drafting Team Responds to Comments	~~May 16 – June 3~~August 4 – September 6, 2011

Definitions of Terms Used in Standard

This section includes all newly defined or revised terms used in the proposed standard. Terms already defined in the Reliability Standards Glossary of Terms are not repeated here. New or revised definitions listed below become approved when the proposed standard is approved. When the standard becomes effective, these defined terms will be removed from the individual standard and added to the Glossary.

Protection System Maintenance Program (PSMP) — An ongoing program by which Protection System components are kept in working order and proper operation of malfunctioning components is restored. A maintenance program for a specific component includes one or more of the following activities:

- Verify — Determine that the component is functioning correctly.
- Monitor — Observe the routine in-service operation of the component.
- Test — Apply signals to a component to observe functional performance or output behavior, or to diagnose problems.
- Inspect — Detect visible signs of component failure, reduced performance and degradation.
- Calibrate — Adjust the operating threshold or measurement accuracy of a measuring element to meet the intended performance requirement.
- ~~Restore — Return malfunctioning components to proper operation.~~

Protection System (NERC Board of Trustees Approved Definition)

- Protective relays which respond to electrical quantities,
- communications systems necessary for correct operation of protective functions,
- voltage and current sensing devices providing inputs to protective relays,
- station dc supply associated with protective functions (including station batteries, battery chargers, and non-battery-based dc supply), and
- control circuitry associated with protective functions through the trip coil(s) of the circuit breakers or other interrupting devices.

The following terms are defined for use only within PRC-005-2, and should remain with the standard upon approval rather than being moved to the Glossary of Terms.

Maintenance Correctable Issue – Failure of a component to operate within design parameters such that ~~it~~the deficiency cannot be ~~restored to functional order by repair or calibration~~corrected during the performance of the ~~initial on-site~~maintenance activity. Therefore this issue requires follow-up corrective action.

Segment – Protection Systems or components of a consistent design standard, or a particular model or type from a single manufacturer that typically share other common elements. Consistent performance is expected across the entire population of a segment. A segment must contain at least sixty (60) individual components.

Component Type - Any one of the five specific elements of the Protection System definition.

Component – A component is any individual discrete piece of equipment included in a Protection System, including but not limited to a protective relay or current sensing device. The designation of what constitutes a control circuit component is very dependent upon how an entity performs and tracks the

testing of the control circuitry. Some entities test their control circuits on a breaker basis whereas others test their circuitry on a local zone of protection basis. Thus, entities are allowed the latitude to designate their own definitions of control circuit components. Another example of where the entity has some discretion on determining what constitutes a single component is the voltage and current sensing devices, where the entity may choose either to designate a full three-phase set of such devices or a single device as a single component.

Countable Event – A component which has failed and requires repair or replacement, any condition discovered during the ~~verification~~maintenance activities in Tables 1-1 through 1-5 which requires corrective action, or a Misoperation attributed to hardware failure or calibration failure. Misoperations due to product design errors, software errors, relay settings different from specified settings, Protection System component configuration errors, or Protection System application errors are not included in Countable Events.

A. Introduction

1. Title: **Protection System Maintenance**

2. Number: PRC-005-2

3. Purpose: To ~~ensure all transmission~~document and ~~generation~~implement programs for the maintenance of all Protection Systems affecting the reliability of the Bulk Electric System (BES) ~~are maintained~~so that these Protection Systems are kept in working order.

4. Applicability:

4.1. Functional Entities:

4.1.1 Transmission Owners

4.1.2 Generator Owners

4.1.3 Distribution Providers

4.2. Facilities:

4.2.1 Protection Systems ~~designed to provide protection~~that are installed for the purpose of detecting faults on BES ~~Element(s).~~Elements (lines, buses, transformers, etc.)

4.2.2 Protection Systems used for underfrequency load-shedding systems installed per ERO underfrequency load-shedding requirements.

4.2.3 Protection Systems used for undervoltage load-shedding systems installed to prevent system voltage collapse or voltage instability for BES reliability.

4.2.4 Protection Systems installed as a Special Protection System (SPS) for BES reliability.

4.2.5 Protection Systems for generator Facilities that are part of the BES, including:

4.2.5.1 Protection Systems that act to trip the generator either directly or via generator lockout or auxiliary tripping relays.

4.2.5.2 Protection Systems for generator step-up transformers for generators that are part of the BES.

4.2.5.3 Protection Systems for transformers connecting aggregated generation, where the aggregated generation is part of the BES (e.g., transformers connecting facilities such as wind-farms to the BES).

4.2.5.4 Protection Systems for generator-connected station service transformers for generators that are part of the BES.

5. ~~**(Proposed)**~~ **Effective Date:** See Implementation Plan

B. Requirements

R1. Each Transmission Owner, Generator Owner, and Distribution Provider shall establish a Protection System Maintenance Program (PSMP) for its Protection Systems ~~designed to provide protection for BES Element(s). The PSMP shall: [~~identified in Section 4.2. *Violation Risk Factor: Medium] [Time Horizon: Long Term Planning]*

The PSMP shall:

1.1. Address all Protection System **component types.**

1.2. Identify which maintenance method (time-based, performance-based (per PRC-005 Attachment A), or a combination) is used to address each Protection System component type. All batteries associated with the station dc supply component type of a Protection System shall be included in a time-based program as described in Table 1-4.

1.3. Identify the associated maintenance intervals for time-based programs, to be no less frequent than the intervals established in Table 1-1 through 1-5 and Table 2.

1.4. Include all applicable monitoring attributes and related maintenance activities applied to each Protection System component type consistent with the maintenance intervals specified in Tables 1-1 through 1-5 and Table 2.

Maintenance Correctable Issue - *Failure of a component to operate within design parameters* such that the deficiency cannot be corrected during the performance of the maintenance activity. *Therefore this issue requires follow-up corrective action.*

R2. Each Transmission Owner, Generator Owner, and Distribution Provider that uses performance-based maintenance intervals in its PSMP shall follow the procedure established in PRC-005 Attachment A to establish and maintain its performance-based intervals. *[Violation Risk Factor: Medium] [Time Horizon: Operations Planning]*

R3. Each Transmission Owner, Generator Owner, and Distribution Provider shall implement and follow its PSMP and initiate resolution of any identified **maintenance correctable issues**. *[Violation Risk Factor: High] [Time Horizon: Operations Planning]*

C. Measures

M1. Each Transmission Owner, Generator Owner and Distribution Provider shall have a current ~~or updated~~ documented Protection System Maintenance Program that addresses all component types of its Protection Systems, as required by Requirement R1. For each Protection System component type, the documentation shall include the type of maintenance program applied (time-based, performance-based, or a combination of these maintenance methods), maintenance activities, maintenance intervals, and, for component types that use monitoring to extend the intervals, the appropriate monitoring attributes as specified in Requirement R1, Parts 1.1 through 1.4.

M2. Each Transmission Owner, Generator Owner, and Distribution Provider that uses a performance-based maintenance program shall have evidence that its current performance-based maintenance program is in accordance with Requirement R2, which may include but is not limited to equipment lists, dated maintenance records, and dated analysis records and results ~~that its current performance-based maintenance program is in accordance with Requirement R2~~.

M3. Each Transmission Owner, Generator Owner, and Distribution Provider shall have ~~evidence which may include but not limited to dated maintenance records, dated maintenance summaries, dated check-off lists, dated inspection records, or dated work orders as~~ evidence that it has implemented the Protection System Maintenance Program and initiated resolution of identified Maintenance Correctable Issues in

Component Type - *Any one of the five specific elements of the Protection System definition.*

accordance with Requirement R3~~.~~, which may include but is not limited to dated maintenance records, dated maintenance summaries, dated check-off lists, dated inspection records, or dated work orders.

D. Compliance

1. Compliance Monitoring Process

1.1. Compliance Monitoring Responsibility

Regional Entity

1.2. Compliance Monitoring and Enforcement Processes:

Compliance Audits

Self-Certifications

Spot Checking

Compliance Violation Investigations

Self-Reporting

Complaints

1.3. Data Retention

The Transmission Owner, Generator Owner, and Distribution Provider shall each keep data or evidence to demonstrate compliance as identified below unless directed by its Compliance Enforcement Authority to retain specific evidence for a longer period of time as part of an investigation.

For Requirement R1, the Transmission Owner, Generator Owner, and Distribution Provider shall each keep its current dated Protection System Maintenance Program including the documentation that specifies the type of maintenance program applied for each Protection System component type.

Component – *A component is any individual discrete piece of equipment included in a Protection System, including but not limited to a protective relay or current sensing device. The designation of what constitutes a control circuit component is very dependent upon how an entity performs and tracks the testing of the control circuitry. Some entities test their control circuits on a breaker basis whereas others test their circuitry on a local zone of protection basis. Thus, entities are allowed the latitude to designate their own definitions of control circuit components. Another example of where the entity has some discretion on determining what constitutes a single component is the voltage and current sensing devices, where the entity may choose either to designate a full three-phase set of such devices or a single device as a single component.*

For Requirement R2 and Requirement R3, the Transmission Owner, Generator Owner, and Distribution Provider shall each keep documentation of the two most recent performances of each distinct maintenance activity for the Protection System **components**, or all performances of each distinct maintenance activity for the Protection System component since the previous scheduled audit date, whichever is longer.

The Compliance Enforcement Authority shall keep the last periodic audit report and all requested and submitted subsequent compliance records.

1.4. Additional Compliance Information

None.

2. Violation Severity Levels

Requirement Number	Lower VSL	Moderate VSL	High VSL	Severe VSL
R1	The responsible entity's PSMP failed to specify whether one component type is being addressed by time-based or performance-based maintenance~~.~~, or a combination of both. (Part 1.2)	The responsible entity's PSMP failed to address one component type included in the definition of 'Protection System' (Part 1.1) OR The responsible entity's PSMP failed to specify whether two component types are being addressed by time-based or performance-based maintenance~~.~~, or a combination of both. (Part 1.2)	The responsible entity's PSMP failed to address two component types included in the definition of 'Protection System' (Part 1.1) OR The responsible entity's PSMP failed to include station batteries in a time-based program (Part 1.2) OR The responsible entity failed to include all maintenance activities or intervals relevant for the identified monitoring attributes specified in Tables 1-1 through 1-5 and Table 2. (Part 1.3 and 1.4)	The responsible entity has not established a PSMP. OR The responsible entity's PSMP failed to address three or more component types included in the definition of 'Protection System' (Part 1.1) OR The responsible entity failed to specify whether three or more component types are being addressed by time-based or performance-based maintenance~~.~~, or a combination of both. (Part 1.2).
R2	~~Entity has Protection System elements in a~~The responsible entity uses performance-based maintenance intervals in its PSMP but has: 1) Failed to reduce countable events to less than 4% within three years OR 2) Failed to annually document program activities, results, maintenance dates, or countable events for 5% or less of components in any individual segment ~~OR~~ ~~3) Maintained a segment with 54-59~~	NA	~~Entity has Protection System elements in a~~The responsible entity uses performance-based maintenance intervals in its PSMP but has failed to reduce countable events to less than 4% within four years.	~~Entity has Protection System components in a~~The responsible entity uses performance-based maintenance intervals in its PSMP but has: 1) Failed to establish the entire technical justification described within ~~R3 and Attachment A~~R2 for the initial use of the performance-based PSMP OR 2) Failed to reduce countable events to less than 4% within five years OR

Requirement Number	Lower VSL	Moderate VSL	High VSL	Severe VSL
	~~components or containing different manufacturers.~~			3) Failed to annually document program activities, results, maintenance dates, or countable events for over 5% of components in any individual segment OR 4) Maintained a segment with less than ~~54~~60 components OR 5) Failed to: • Annually update the list of components, OR • Perform maintenance on the greater of 5% of the segment population or 3 components, OR • Annually analyze the program activities and results for each segment.
R3	The responsible entity has failed to ~~complete~~implement and follow scheduled program on 5% or less of total Protection System components. OR The responsible entity has failed to initiate resolution on 5% or less of identified maintenance correctable issues.	The responsible entity has failed to ~~complete~~implement and follow scheduled program on greater than 5%, but no more than 10% of total Protection System components OR The responsible entity has failed to initiate resolution on greater than 5%, but less than or equal to 10% of identified maintenance correctable issues.	The responsible entity has failed to ~~complete~~implement and follow scheduled program on greater than 10%, but no more than 15% of total Protection System components OR The responsible entity has failed to initiate resolution on greater than 10%, but less than or equal to 15% of identified.	The responsible entity has failed to ~~complete~~implement and follow scheduled program on greater than 15% of total Protection System components OR The responsible entity has failed to initiate resolution on greater than 15% of identified maintenance correctable issues.

E. Regional Variances

None

F. Supplemental Reference Document

The following documents present a detailed discussion about determination of maintenance intervals and other useful information regarding establishment of a maintenance program.

1. PRC-005-2 Protection System Maintenance Supplementary Reference and FAQ — February 2011.

Version History

Version	Date	Action	Change Tracking
2	TBD	Complete revision, absorbing maintenance requirements from PRC-005-1, PRC-008-0, PRC-011-0, PRC-017	Complete revision

Table 1-1 Component Type - Protective Relay ~~Note: Table requirements apply to all components of Protection Systems, UVLS and UFLS Systems, and SPSs except as noted.~~		
Component Attributes	**Maximum Maintenance Interval**[1]	**Maintenance Activities**
Any unmonitored protective relay not having all the monitoring attributes of a category below.	6 calendar years	Verify that settings are as specified For non-microprocessor relays: • Test and, if necessary calibrate For microprocessor relays: • Verify operation of the relay inputs and outputs that are essential to proper functioning of the Protection System. • Verify acceptable measurement of power system input values.
Monitored microprocessor protective relay with the following: • Internal self diagnosis and alarming~~.~~ (see Table 2). • Voltage and/or current waveform sampling three or more times per power cycle, and conversion of samples to numeric values for measurement calculations by microprocessor electronics ~~(see Table 2).~~. • Alarming for power supply failure (see Table 2).	12 calendar years	Verify: • Settings are as specified. • Operation of the relay inputs and outputs that are essential to proper functioning of the Protection System. • Acceptable measurement of power system input values.

[1] For the tables in this standard, a calendar year starts on the first day of a new year (January 1) after a maintenance activity has been completed. For the tables in this standard, a calendar month starts on the first day of the first month after a maintenance activity has been completed.

Monitored microprocessor protective relay with preceding row attributes and the following: • Ac measurements are continuously verified by comparison to an independent ac measurement source, with alarming for excessive error. (See Table 2) • Some or all binary or status inputs and control outputs are monitored by a process that continuously demonstrates ability to perform as designed, with alarming for failure. (See Table 2) • Alarming for change of settings. (See Table 2)	12 calendar years	Verify only the unmonitored relay inputs and outputs that are essential to proper functioning of the Protection System.

Table 1-2 Component Type - Communications Systems ~~Note: Table requirements apply to all components of Protection Systems, UVLS and UFLS Systems, and SPSs except as noted.~~		
Component Attributes	**Maximum Maintenance Interval**	**Maintenance Activities**
Any unmonitored communications system necessary for correct operation of protective functions, and not having all the monitoring attributes of a category below.	3 calendar months	Verify that the communications system is functional.
	6 calendar years	Verify that the channel meets performance criteria pertinent to the communications technology applied (e.g signal level, reflected power, or data error rate). Verify essential signals to and from other Protection System components.
Any communications system with continuous monitoring or periodic automated testing for the presence of the channel function, and alarming for loss of function. (See Table 2)	12 calendar years	Verify that the channel meets performance criteria pertinent to the communications technology applied (e.g signal level, reflected power, or data error rate). Verify essential signals to and from other Protection System components.

Any communications system with continuous monitoring or periodic automated testing for the performance of the channel using criteria pertinent to the communications technology applied (e.g. signal level, reflected power, or data error rate, and alarming for excessive performance degradation). (See Table 2)	No periodic maintenance specified	None.

Table 1-3 Component Type - Voltage and Current Sensing Devices Providing Inputs to Protective Relays ~~**Note:** Table requirements apply to all components of Protection Systems, UVLS and UFLS Systems, and SPSs except as noted.~~		
Component Attributes	**Maximum Maintenance Interval**	**Maintenance Activities**
Any voltage and current sensing devices not having monitoring attributes of the category below.	12 calendar years	Verify that current and voltage signal values are provided to the protective relays.
Voltage and Current Sensing devices connected to microprocessor relays with AC measurements are continuously verified by comparison of sensing input value as measured by the microprocessor relay to an independent ac measurement source, with alarming for unacceptable error or failure~~.~~ (see Table 2).	No periodic maintenance specified	None.

Table 1-4(a) Component Type ~~–~~ Protection System Station dc Supply Using Vented Lead-Acid (VLA) Batteries		
Component Attributes	**Maximum Maintenance Interval**	**Maintenance Activities**
Protection System Station dc supply ~~with~~using **Vented Lead-Acid (VLA) batteries** not having monitoring attributes of Table 1-4(f). Protection System Station dc supply for distribution breakers for UFLS or UVLS are excluded (see Table 1-4(e)).	3 Calendar Months	Verify: • Station dc supply voltage Inspect: • Electrolyte level • For unintentional grounds
	18 Calendar Months	Verify: • Float voltage of battery charger • Battery continuity • Battery terminal connection resistance • Battery intercell or unit-to-unit connection resistance Inspect: • Cell condition of all individual battery cells where cells are visible – or measure battery cell/unit internal ohmic values where the cells are not visible • Physical condition of battery rack
	18 Calendar Months -or- 6 Calendar Years	Verify that the station battery can perform as designed by evaluating the measured cell/unit internal ohmic values to station battery baseline. -or- Verify that the station battery can perform as designed by conducting a performance, service, or modified performance capacity test of the entire battery bank.

Table 1-4(b) Component Type ~~–~~ Protection System Station dc Supply Using Valve-Regulated Lead-Acid (VRLA) Batteries		
Component Attributes	**Maximum Maintenance Interval**	**Maintenance Activities**
Protection System Station dc supply **with Valve Regulated Lead-Acid (VRLA) batteries** not having monitoring attributes of Table 1-4(f). Station dc supply for distribution breakers for UFLS or UVLS are excluded (see Table 1-4(e)).	3 Calendar Months	Verify: • Station dc supply voltage Inspect: • For unintentional grounds
	6 Calendar Months	Inspect: • Condition of all individual units by measuring battery cell/unit internal ohmic values.
	18 Calendar Months	Verify: • Float voltage of battery charger • Battery continuity • Battery terminal connection resistance • Battery intercell or unit-to-unit connection resistance Inspect: • Physical condition of battery rack
	6 Calendar Months -or- 3 Calendar Years	Verify that the station battery can perform as designed by evaluating the measured cell/unit internal ohmic values to station battery baseline. -or- Verify that the station battery can perform as designed by conducting a performance, service, or modified performance capacity test of the entire battery bank

Table 1-4(c) Component Type ~~–~~ Protection System Station dc Supply Using Nickel-Cadmium (NiCad) Batteries		
Component Attributes	**Maximum Maintenance Interval**	**Maintenance Activities**
Protection System Station dc supply **Nickel-Cadmium (NiCad) batteries** not having monitoring attributes of Table 1-4(f). Station dc supply for distribution breakers for UFLS or UVLS are excluded (see Table 1-4(e)).	3 Calendar Months	Verify: • Station dc supply voltage Inspect: • Electrolyte level • For unintentional grounds
	18 Calendar Months	Verify: • Float voltage of battery charger • Battery continuity • Battery terminal connection resistance • Battery intercell or unit-to-unit connection resistance Inspect: • Cell condition of all individual battery cells. • Physical condition of battery rack
	6 Calendar Years	Verify that the station battery can perform as designed by conducting a performance service, or modified performance capacity test of the entire battery bank.

Table 1-4(d) Component Type ~~–~~ Protection System Station dc Supply Using Non Battery Based Energy Storage		
Component Attributes	**Maximum Maintenance Interval**	**Maintenance Activities**
Any Protection System station dc supply not using a battery and not having monitoring attributes of Table 1-4(f). Protection System Station dc supply for distribution breakers for UFLS ~~or~~, UVLS and SPS are excluded (see Table 1-4(e)).	3 Calendar Months	Verify: • Station dc supply voltage Inspect: • For unintentional grounds
	18 Calendar Months	Inspect: Condition of non-battery based dc supply
	6 Calendar Years	Verify that the dc supply can perform as designed when ac power is not present.

Table 1-4(e) Component Type ~~–~~ Protection System Station dc Supply for ~~Distribution Breakers~~non-BES Interrupting Device		
Component Attributes	**Maximum Maintenance Interval**	**Maintenance Activities**
Any Protection System dc supply for tripping only ~~distribution breakers~~non-BES interrupting devices as part of a UFLS ~~or~~, UVLS ~~system,~~ or SPS system and not having monitoring attributes of Table 1-4(f).	When control circuits are verified (See Table 1-5)	Verify: • Station dc supply voltage

Table 1-4(f) Exclusions for Protection System Station dc Supply Monitoring Devices and Systems		
Component Attributes	**Maximum Maintenance Interval**	**Maintenance Activities**
Any station dc supply with high and low voltage monitoring and alarming of the battery charger voltage to detect charger overvoltage and charger failure. (See Table 2)	No periodic maintenance specified	No periodic verification of station dc supply voltage is required.
Any battery based station dc supply with electrolyte level monitoring and alarming in every cell (See Table 2)		No periodic inspection of the electrolyte level for each cell is required.
Any station dc supply with unintentional dc ground monitoring and alarming (See Table 2)		No periodic inspection of unintentional dc grounds is required.
Any station dc supply with charger float voltage monitoring and alarming to ensure correct float voltage is being applied on the station dc supply~~.~~ (See Table 2)		No periodic verification of float voltage of battery charger is required
Any battery based station dc supply with monitoring and alarming of battery string continuity (See Table 2)		No periodic verification of the battery continuity is required.
Any battery based station dc supply with monitoring and alarming of the intercell and/or terminal connection detail resistance of the entire battery (See Table 2)		No periodic verification of the intercell and terminal connection resistance is required.
Any lead acid battery based station dc supply with internal ohmic value monitoring, and ~~alarming of internal Ohmic~~evaluating present values ~~of every cell (if available for measurement) or each unit and alarming when any cell/unit deviates by an unacceptable value from the~~relative to baseline internal ohmic ~~value.~~ values for every cell/unit (See Table 2)		.No periodic measurement and ~~comparison~~evaluation relative to baseline of battery cell/unit internal ohmic values ~~for VRLA batteries and VLA batteries where the cells are not visible are~~is required~~.~~ to verify the station battery can perform as designed .
Any Valve Regulated Lead-Acid (VRLA) station battery with monitoring and alarming of each cell/unit internal Ohmic value. (See Table 2)		No periodic inspection of the condition of all individual units by measuring battery cell/unit internal ohmic values of a station VRLA battery is required.

Table 1-5 Component Type - Control Circuitry Associated With Protective Functions **Note:** Table requirements apply to all Control Circuitry components of Protection Systems, UVLS and UFLS Systems, and SPSs except as noted.		
Component Attributes	**Maximum Maintenance Interval**	**Maintenance Activities**
Trip coils or actuators of circuit breakers, interrupting devices, or mitigating devices (excluding UFLS or UVLS systems).	6 calendar years	Verify that each trip coil is able to operate the circuit breaker, interrupting device, or mitigating device.
Trip coils of circuit breakers and interrupting devices in UFLS or UVLS systems.	No periodic maintenance specified	None.
Electromechanical lockout and/or tripping auxiliary devices which are directly in a trip path from the protective relay to the interrupting device trip coil.	6 calendar years	Verify electrical operation of electromechanical trip and auxiliary devices.
Unmonitored control circuitry associated with protective functions.	12 calendar years	Verify all paths of the control and trip circuits.
Control circuitry whose continuity and energization or ability to operate are monitored and alarmed (See Table 2).	No periodic maintenance specified	None.

Table 2 – Alarming Paths and Monitoring In Tables 1-1 through 1-5, alarm attributes used to justify extended maximum maintenance intervals and/or reduced maintenance activities are subject to the following maintenance requirements		
Component Attributes	**Maximum Maintenance Interval**	**Maintenance Activities**
Any alarm path through which alarms in Tables 1-1 through 1-5 are conveyed from the alarm origin to the location where corrective action can be initiated, and not having all the attributes of the "Alarm Path with monitoring" category below. Alarms are reported within 24 hours of DETECTION to a location where corrective action can be initiated.	12 Calendar Years	Verify that the alarm path conveys alarm signals to a location where corrective action can be initiated.
Alarm Path with monitoring: The location where corrective action is taken receives an alarm within 24 hours for failure of any portion of the alarming path from the alarm origin to the location where corrective action can be initiated.	No periodic maintenance specified	No periodic maintenance specified.

PRC-005 — Attachment A

Criteria for a Performance-Based Protection System Maintenance Program

Purpose: To establish a technical basis for initial and continued use of a performance-based Protection System Maintenance Program (PSMP).

To establish the technical justification for the initial use of a performance-based PSMP:

1. Develop a list with a description of components included in each designated segment of the Protection System component population, with a minimum **segment** population of 60 components.
2. Maintain the components in each segment according to the time-based maximum allowable intervals established in Tables 1-~~1through~~1 through 1-5 until results of maintenance activities for the segment are available for a minimum of 30 individual components of the segment.

> **Segment** – *Protection Systems or components of a consistent design standard, or a particular model or type from a single manufacturer that typically share other common elements. Consistent performance is expected across the entire population of a segment. A segment must contain at least sixty (60) individual components.*

3. Document the maintenance program activities and results for each segment, including maintenance dates and countable events for each included component.
4. Analyze the maintenance program activities and results for each segment to determine the overall performance of the segment and develop maintenance intervals.
5. Determine the maximum allowable maintenance interval for each segment such that the segment experiences **countable events** on no more than 4% of the components within the segment, for the greater of either the last 30 components maintained or all components maintained in the previous year.

> **Countable Event** – *A component which has failed and requires repair or replacement, any condition discovered during the maintenance activities in Tables 1-1 through 1-5 which requires corrective action, or a Misoperation attributed to hardware failure or calibration failure. Misoperations due to product design errors, software errors, relay settings different from specified settings, Protection System component configuration errors, or Protection System application errors are not included in Countable Events.*

To maintain the technical justification for the ongoing use of a performance-based PSMP:

1. At least annually, update the list of Protection System components and segments and/or description if any changes occur within the segment.
2. Perform maintenance on the greater of 5% of the components (addressed in the performance based PSMP) in each segment or 3 individual components within the segment in each year.
3. For the prior year, analyze the maintenance program activities and results for each segment to determine the overall performance of the segment.

4. ~~If the components in a Protection System segment maintained through a performance-based PSMP experience 4% or more countable events, develop, document, and implement an action plan to reduce the countable events to less than 4% of the segment population within 3 years.~~
5. Using the prior year's data, determine the maximum allowable maintenance interval for each segment such that the segment experiences countable events on no more than 4% of the components within the segment, for the greater of either the last 30 components maintained or all components maintained in the previous year.
6. If the components in a Protection System segment maintained through a performance-based PSMP experience 4% or more countable events, develop, document, and implement an action plan to reduce the countable events to less than 4% of the segment population within 3 years.

Implementation Plan for PRC-005-02

Standards Involved:

- Approval:
  - PRC-005-2 – Protection System Maintenance and Testing

- Retirements (phased to coincide with each entity's implementation of PRC-005-2 as specified in the Implementation Plan for Requirements R1 through R3 later in this document):
  - PRC-005-1 – Transmission and Generation Protection System Maintenance and Testing
  - PRC-008-0 – Implementation and Documentation of Underfrequency Load Shedding Equipment Maintenance Program
  - PRC-011-0 – Undervoltage Load Shedding System Maintenance and Testing
  - PRC-017-0 – Special Protection System Maintenance and Testing

Prerequisite Approvals:

- Revised definition of "Protection System"

Background:

The Implementation Plan reflects consideration of the following:

1. The requirements set forth in the proposed standard establish maximum allowable maintenance intervals for the first time. The established maximum allowable intervals may be shorter than those currently in use by some entities.
2. For entities using longer intervals than the maximum allowable intervals established in the proposed standard, it is unrealistic for those entities to be immediately in compliance with the new intervals. Further, entities should be allowed to become compliant in such a way as to facilitate a continuing maintenance program.
3. Entities that have previously been performing maintenance within the newly specified intervals may not have all the documentation needed to demonstrate compliance with all of the maintenance activities specified.
4. The Implementation Schedule set forth in this document requires that entities develop their revised Protection System Maintenance Program within 12 months following applicable regulatory approvals, or in those jurisdictions where no regulatory approval is required, on the first day of the first calendar quarter twelve months following Board of Trustees adoption.
5. The Implementation Schedule set forth in this document further requires implementation of the revised Protection System Maintenance Program in roughly equally-distributed steps over the maintenance intervals prescribed for each respective maintenance activity in order that entities may implement this standard in a systematic method that facilitates an effective ongoing Protection System Maintenance Program.

General Considerations:

Each Transmission Owner, Generator Owner, and Distribution Provider shall follow the protection system maintenance and testing program it used to perform maintenance and testing to comply with PRC-005-1, PRC-008-0, PRC-011-0, and PRC-017-0 (for the Protection System components identified in PRC-005-2 Tables 1-1 through 1-5) until that Transmission Owner, Generator Owner or Distribution

Provider meets initial compliance for maintenance of the same Protection System component, in accordance with the phasing specified below.

For audits that are conducted during the time period when entities are modifying their existing protection system maintenance and testing programs to become compliant with the maintenance activities and intervals specified in PRC-005-2, each responsible entity must be prepared to identify:

- All of its applicable protection system components.
- For each component, whether maintenance of that component is being addressed according to PRC-005-2 or under PRC-005-1, PRC-008-0, PRC-011-0, or PRC-017-0.
- Evidence that each component has been maintained under the relevant requirements.

Retirement of Existing Standards:
The existing Standards PRC-005-1, PRC-008-0, PRC-011-0, and PRC-017-0 shall be retired upon regulatory approval of PRC-005-2.

Implementation Plan for Definition:
Protection System Maintenance Program – Entities shall use this definition when implementing any portions of R1, R2 and R3 which use this defined term.

Implementation Plan for Requirement R1:

- Entities shall be 100% compliant on the first day of the first calendar quarter twelve (12) months following applicable regulatory approvals, or in those jurisdictions where no regulatory approval is required, on the first day of the first calendar quarter twenty-one (21) months following Board of Trustees adoption.

Implementation Plan for Requirements R2 and R3:

1. For Protection System components with maximum allowable intervals of less than 1 year, as established in Tables 1-1 through 1-5:
    a. The entity shall be 100% compliant on the first day of the first calendar quarter 15 months following applicable regulatory approval, or in those jurisdictions where no regulatory approval is required, on the first day of the first calendar quarter 24 months following Board of Trustees adoption.

2. For Protection System components with maximum allowable intervals 1 year or more, but 2 years or less, as established in Tables 1-1 through 1-5:
    a. The entity shall be 100% compliant on the first day of the first calendar quarter 36 months following applicable regulatory approval, or in those jurisdictions where no regulatory approval is required, on the first day of the first calendar quarter 48 months following Board of Trustees adoption.

3. For Protection System components with maximum allowable intervals of 3 years, as established in Tables 1-1 through 1-5:

a. The entity shall be at least 30% compliant on the first day of the first calendar quarter 24 months following applicable regulatory approval (or, for generating plants with scheduled outage intervals exceeding two years, at the conclusion of the first succeeding maintenance outage), or in those jurisdictions where no regulatory approval is required, on the first day of the first calendar quarter 36 months following Board of Trustees adoption.
b. The entity shall be at least 60% compliant on the first day of the first calendar quarter 36 months following applicable regulatory approval, or in those jurisdictions where no regulatory approval is required, on the first day of the first calendar quarter 48 months following Board of Trustees adoption.
c. The entity shall be 100% compliant on the first day of the first calendar quarter 48 months following applicable regulatory approval, or in those jurisdictions where no regulatory approval is required, on the first day of the first calendar quarter 60 months following Board of Trustees adoption.

4. For Protection System components with maximum allowable intervals of 6 years, as established in Tables 1-1 through 1-5:
   a. The entity shall be at least 30% compliant on the first day of the first calendar quarter 36 months following applicable regulatory approval (or, for generating plants with scheduled outage intervals exceeding three years, at the conclusion of the first succeeding maintenance outage), or in those jurisdictions where no regulatory approval is required, on the first day of the first calendar quarter 48 months following Board of Trustees adoption.
   b. The entity shall be at least 60% compliant on the first day of the first calendar quarter 60 months following applicable regulatory approval, or in those jurisdictions where no regulatory approval is required, on the first day of the first calendar quarter 72 months following Board of Trustees adoption.
   c. The entity shall be 100% compliant on the first day of the first calendar quarter 84 months following applicable regulatory approval, or in those jurisdictions where no regulatory approval is required, on the first day of the first calendar quarter 96 months following Board of Trustees adoption.

5. For Protection System components with maximum allowable intervals of 12 years, as established in Tables 1-1 through 1-5 and Table 2:
   a. The entity shall be at least 30% compliant on the first day of the first calendar quarter 60 months following applicable regulatory approval, or in those jurisdictions where no regulatory approval is required, on the first day of the first calendar quarter 72 months following Board of Trustees adoption.
   b. The entity shall be at least 60% compliant on the first day of the first calendar quarter following 108 months following applicable regulatory approval, or in those jurisdictions where no regulatory approval is required, on the first day of the first calendar quarter 120 months following Board of Trustees adoption.
   c. The entity shall be 100% compliant on the first day of the first calendar quarter 156 months following applicable regulatory approval, or in those jurisdictions where no regulatory approval is required, on the first day of the first calendar quarter 168 months following Board of Trustees adoption.

Applicability:
This standard applies to the following functional entities:

- Transmission Owners
- Generator Owners
- Distribution Providers

Implementation Plan for PRC-005-02

Standards Involved:

- Approval:
  - PRC-005-2 – Protection System Maintenance and Testing

- Retirements~~:~~ (phased to coincide with each entity's implementation of PRC-005-2 as specified in the Implementation Plan for Requirements R1 through R3 later in this document):
  - PRC-005-1 – Transmission and Generation Protection System Maintenance and Testing
  - PRC-008-0 – Implementation and Documentation of Underfrequency Load Shedding Equipment Maintenance Program
  - PRC-011-0 – Undervoltage Load Shedding System Maintenance and Testing
  - PRC-017-0 – Special Protection System Maintenance and Testing

Prerequisite Approvals:

- Revised definition of "Protection System"

Background:

The Implementation Plan reflects consideration of the following:

1. The requirements set forth in the proposed standard establish maximum allowable maintenance intervals for the first time. The established maximum allowable intervals may be shorter than those currently in use by some entities.
2. For entities using longer intervals than the maximum allowable intervals established in the proposed standard, it is unrealistic for those entities to be immediately in compliance with the new intervals. Further, entities should be allowed to become compliant in such a way as to facilitate a continuing maintenance program.
3. Entities that have previously been performing maintenance within the newly specified intervals may not have all the documentation needed to demonstrate compliance with all of the maintenance activities specified.
4. The Implementation Schedule set forth in this document requires that entities develop their revised Protection System Maintenance Program within 12 months following applicable regulatory approvals, or in those jurisdictions where no regulatory approval is required, on the first day of the first calendar quarter twelve months following Board of Trustees adoption.
5. The Implementation Schedule set forth in this document further requires implementation of the revised Protection System Maintenance Program in roughly equally-distributed steps over the maintenance intervals prescribed for each respective maintenance activity in order that entities may implement this standard in a systematic method that facilitates an effective ongoing Protection System Maintenance Program.

General Considerations:

Each Transmission Owner, Generator Owner, and Distribution Provider shall follow the protection system maintenance and testing program it used to perform maintenance and testing to comply with PRC-005-1, PRC-008-0, PRC-011-0, and PRC-017-0 (for the Protection System components identified in PRC-005-2 Tables 1-1 through 1-5) until that Transmission Owner, Generator Owner or Distribution

Provider meets initial compliance for maintenance of the same Protection System component, in accordance with the phasing specified below.

For audits that are conducted during the time period when entities are modifying their existing protection system maintenance and testing programs to become compliant with the maintenance activities and intervals specified in PRC-005-2, each responsible entity must be prepared to identify:

- All of its applicable protection system components.
- For each component, whether maintenance of that component is ~~still~~ being addressed according to PRC-005-2 or under PRC-005-1~~ or is being performed according toPRC-005-2~~, PRC-008-0, PRC-011-0, or PRC-017-0.
- Evidence that each component has been maintained under the relevant requirements.

Retirement of Existing Standards:
The existing Standards PRC-005-1, PRC-008-0, PRC-011-0, and PRC-017-0 shall be retired upon regulatory approval of PRC-005-2.

Implementation Plan for Definition:
Protection System Maintenance Program – Entities shall use this definition when implementing any portions of R1, R2 and R3 which use this defined term.

Implementation Plan for Requirement R1:

- Entities shall be 100% compliant on the first day of the first calendar quarter twelve (12) months following applicable regulatory approvals, or in those jurisdictions where no regulatory approval is required, on the first day of the first calendar quarter ~~twelve~~twenty-one (21) months following Board of Trustees adoption.

Implementation Plan for Requirements R2 and R3:

1. For Protection System components with maximum allowable intervals of less than 1 year, as established in Tables 1-1 through 1-5:
    a. The entity shall be 100% compliant on the first day of the first calendar quarter 15 months following applicable regulatory approval, or in those jurisdictions where no regulatory approval is required, on the first day of the first calendar quarter ~~15~~24 months following Board of Trustees adoption.

2. For Protection System components with maximum allowable intervals 1 year or more, but 2 years or less, as established in Tables 1-1 through 1-5:
    a. The entity shall be 100% compliant on the first day of the first calendar quarter ~~3 calendar years~~36 months following applicable regulatory approval, or in those jurisdictions where no regulatory approval is required, on the first day of the first calendar quarter ~~3 calendar years~~48 months following Board of Trustees adoption.

3. For Protection System components with maximum allowable intervals of 3 years, as established in Tables 1-1 through 1-5:

a. The entity shall be at least 30% compliant on the first day of the first calendar quarter ~~2 calendar years~~24 months following applicable regulatory approval (or, for generating plants with scheduled outage intervals exceeding two ~~calendar~~ years, at the conclusion of the first succeeding maintenance outage), or in those jurisdictions where no regulatory approval is required, on the first day of the first calendar quarter ~~2 calendar years~~36 months following Board of Trustees adoption.

~~b.~~ The entity shall be at least 60% compliant on the first day of the first calendar quarter ~~3 calendar years following applicable regulatory approval, or in those jurisdictions where no regulatory approval is required, on the first day of the first calendar quarter 3 calendar years following Board of Trustees adoption.~~

~~c.~~b. ~~The entity shall be 100% compliant on the first day of the first calendar quarter 4 calendar years~~36 months following applicable regulatory approval, or in those jurisdictions where no regulatory approval is required, on the first day of the first calendar quarter ~~4 calendar years~~48 months following Board of Trustees adoption.

c. The entity shall be 100% compliant on the first day of the first calendar quarter 48 months following applicable regulatory approval, or in those jurisdictions where no regulatory approval is required, on the first day of the first calendar quarter 60 months following Board of Trustees adoption.

4. For Protection System components with maximum allowable intervals of 6 years, as established in Tables 1-1 through 1-5:

a. The entity shall be at least 30% compliant on the first day of the first calendar quarter ~~3 calendar years~~36 months following applicable regulatory approval (or, for generating plants with scheduled outage intervals exceeding ~~two calendar~~three years, at the conclusion of the first succeeding maintenance outage), or in those jurisdictions where no regulatory approval is required, on the first day of the first calendar quarter ~~3 calendar years~~48 months following Board of Trustees adoption.

b. The entity shall be at least 60% compliant on the first day of the first calendar quarter ~~5 calendar years~~60 months following applicable regulatory approval, or in those jurisdictions where no regulatory approval is required, on the first day of the first calendar quarter ~~5 calendar years~~72 months following Board of Trustees adoption.

c. The entity shall be 100% compliant on the first day of the first calendar quarter ~~7 calendar years~~84 months following applicable regulatory approval, or in those jurisdictions where no regulatory approval is required, on the first day of the first calendar quarter ~~7 calendar years~~96 months following Board of Trustees adoption.

5. For Protection System components with maximum allowable intervals of 12 years, as established in Tables 1-1 through 1-5 and Table 2:

a. The entity shall be at least 30% compliant on the first day of the first calendar quarter ~~5 calendar years~~60 months following applicable regulatory approval, or in those jurisdictions where no regulatory approval is required, on the first day of the first calendar quarter ~~5 calendar years~~72 months following Board of Trustees adoption.

b. The entity shall be at least 60% compliant on the first day of the first calendar quarter following ~~9 calendar years~~108 months following applicable regulatory approval, or in those jurisdictions where no regulatory approval is required, on the first day of the first calendar quarter 120 months following Board of Trustees adoption.

~~b.~~c. The entity shall be 100% compliant on the first day of the first calendar quarter 156 months following applicable regulatory approval, or in those jurisdictions where no regulatory approval is required, on the first day of the first calendar quarter ~~9 calendar years~~168 months following Board of Trustees adoption.

~~c.The entity shall be 100% compliant on the first day of the first calendar quarter 13 calendar years following applicable regulatory approval, or in those jurisdictions where no regulatory approval is required, on the first day of the first calendar quarter 13 calendar years following Board of Trustees adoption.~~

Applicability:
This standard applies to the following functional entities:

- Transmission Owners
- Generator Owners
- Distribution Providers

Project 2007-17 Protection System Maintenance & Testing

New Definition for Approval:

Protection System Maintenance Program (PSMP) — An ongoing program by which Protection System components are kept in working order and proper operation of malfunctioning components is restored. A maintenance program for a specific component includes one or more of the following activities:

- Verify — Determine that the component is functioning correctly.
- Monitor — Observe the routine in-service operation of the component.
- Test — Apply signals to a component to observe functional performance or output behavior, or to diagnose problems.
- Inspect — Detect visible signs of component failure, reduced performance and degradation.
- Calibrate — Adjust the operating threshold or measurement accuracy of a measuring element to meet the intended performance requirement.
- Upkeep — Perform routine activities necessary to assure that the component remains in good working order and implementation of any manufacturer's hardware and software service advisories which are relevant to the application of the device.
- Restore — Return malfunctioning components to proper operation.

NERC

NORTH AMERICAN ELECTRIC RELIABILITY CORPORATION

PRC-005-2 Protection System Maintenance

Supplementary Reference & FAQ

Draft

June 2, 2011

Prepared by the

Protection System Maintenance and Testing Standard Drafting Team

116-390 Village Blvd., Princeton, NJ 08540
609.452.8060 | 609.452.9550 fax
www.nerc.com

Table of Contents

1. Introduction and Summary 4
2. Need for Verifying Protection System Performance 5
2.1 Existing NERC Standards for Protection System Maintenance and Testing 5
2.2 Protection System Definition 6
2.3 Applicability of New Protection System Maintenance Standards 6
2.3.1 Frequently Asked Questions: 7
2.4 Applicable Relays 8
2.4.1 Frequently Asked Questions: 9
3. Protection Systems Product Generations 10
4. Definitions 11
4.1 Frequently Asked Questions: 11
5. Time-Based Maintenance (TBM) Programs 13
5.1 Maintenance Practices 13
5.1.1 Frequently Asked Questions: 15
5.2 Extending Time-Based Maintenance 16
5.2.1 Frequently Asked Question: 17
6. Condition-Based Maintenance (CBM) Programs 18
6.1 Frequently Asked Questions: 19
7. Time-Based Versus Condition-Based Maintenance 20
7.1 Frequently Asked Questions: 20
8. Maximum Allowable Verification Intervals 25
8.1 Maintenance Tests 25
8.1.1 Table of Maximum Allowable Verification Intervals 25
8.1.2 Additional Notes for Tables 1-1 through 1-5 27
8.1.3 Frequently Asked Questions: 28
8.2 Retention of Records 33
8.2.1 Frequently Asked Questions: 33
8.3 Basis for Table 1 Intervals 35
8.4 Basis for Extended Maintenance Intervals for Microprocessor Relays 36
9. Performance-Based Maintenance Process 38
9.1 Minimum Sample Size 39
9.2 Frequently Asked Questions: 41
10. Overlapping the Verification of Sections of the Protection System 54
10.1 Frequently Asked Question: 55
11. Monitoring by Analysis of Fault Records 55

11.1 Frequently Asked Question: 56
12. Importance of Relay Settings in Maintenance Programs 57
12.1 Frequently Asked Questions: 58
13. Self-Monitoring Capabilities and Limitations 60
13.1 Frequently Asked Question: 61
14. Notification of Protection System Failures 62
15. Maintenance Activities 63
15.1 Protective Relays (Table 1-1) 63
15.1.1 Frequently Asked Question: 64
15.2 Voltage & Current Sensing Devices (Table 1-3) 64
15.2.1 Frequently Asked Questions: 65
15.3 Control circuitry associated with protective functions (Table 1-5) 67
15.3.1 Frequently Asked Questions: 68
15.4 Batteries and DC Supplies (Table 1-4) 69
15.4.1 Frequently Asked Questions: 70
15.5 Associated communications equipment (Table 1-2) 81
15.5.1 Frequently Asked Questions: 82
15.6 Alarms (Table 2) 85
15.6.1 Frequently Asked Question: 85
15.7 Examples of Evidence of Compliance 86
15.7.1 Frequently Asked Questions: 86
Yes. 87
16. References 88
Figures 89
Figure 1: Typical Transmission System 89
Figure 2: Typical Generation System 90
Appendix B — Protection System Maintenance Standard Drafting Team 95

This supplementary reference to PRC-005-2 is not mandatory and enforceable.

1. Introduction and Summary

NERC currently has four Reliability Standards that are mandatory and enforceable in the United States and address various aspects of maintenance and testing of Protection and Control systems. These standards are:

PRC-005-1 — *Transmission and Generation Protection System Maintenance and Testing*

PRC-008-0 — *Underfrequency Load Shedding Equipment Maintenance Programs*

PRC-011-0 — *UVLS System Maintenance and Testing*

PRC-017-0 — *Special Protection System Maintenance and Testing*

While these standards require that applicable entities have a maintenance program for Protection Systems, and that these entities must be able to demonstrate they are carrying out such a program, there are no specifics regarding the technical requirements for Protection System maintenance programs. Furthermore, FERC Order 693 directed additional modifications respective to Protection System maintenance programs. PRC-005-2 combines and replaces PRC-005, PRC-008, PRC-011 and PRC-017.

2. Need for Verifying Protection System Performance

Protective relays have been described as silent sentinels, and do not generally demonstrate their performance until a fault or other power system problem requires that they operate to protect power system elements, or even the entire Bulk Electric System (BES). Lacking faults, switching operations or system problems, the Protection Systems may not operate, beyond static operation, for extended periods. A misoperation - a false operation of a Protection System or a failure of the Protection System to operate, as designed, when needed - can result in equipment damage, personnel hazards, and wide area disturbances or unnecessary customer outages. Maintenance or testing programs are used to determine the performance and availability of Protection Systems.

Typically, utilities have tested Protection Systems at fixed time intervals, unless they had some incidental evidence that a particular Protection System was not behaving as expected. Testing practices vary widely across the industry. Testing has included system functionality, calibration of measuring devices, and correctness of settings. Typically, a Protection System must be visited at its installation site and, in many cases, removed from service for this testing.

Fundamentally, a Reliability Standard for Protection System Maintenance and Testing requires the performance of the maintenance activities that are necessary to detect and correct plausible age and service related degradation of the Protection System components such that a properly built and commissioned Protection System will continue to function as designed over its service life.

Similarly station batteries which are an important part of the station dc supply are not called upon to provide instantaneous dc power to the Protection System until power is required by the Protection System to operate circuit breakers or interrupting devices to clear faults or to isolate equipment.

2.1 Existing NERC Standards for Protection System Maintenance and Testing

For critical BES protection functions, NERC Standards have required that each utility or asset owner define a testing program. The starting point is the existing Standard PRC-005, briefly restated as follows:

Purpose: To document and implement programs for the maintenance of all Protection Systems affecting the reliability of the Bulk Electric System (BES) so that these Protection Systems are kept in working order.

PRC-005-1 is not specific on where the boundaries of the Protection Systems lie. However, the definition of Protection System in the NERC Glossary of Terms used in Reliability Standards indicates what must be included as a minimum.

At the beginning of the project to develop PRC-005-2, the definition of Protection System was:

Protective relays, associated communications systems, voltage and current sensing devices, station batteries and dc control circuitry.

Applicability: Owners of generation and transmission Protection Systems.

Requirements: The owner shall have a documented maintenance program with test intervals. The owner must keep records showing that the maintenance was performed at the specified intervals.

2.2 Protection System Definition

The most recently approved definition of Protection Systems is:

- Protective relays which respond to electrical quantities,
- communications systems necessary for correct operation of protective functions,
- voltage and current sensing devices providing inputs to protective relays,
- station dc supply associated with protective functions (including station batteries, battery chargers, and non-battery-based dc supply), and
- control circuitry associated with protective functions through the trip coil(s) of the circuit breakers or other interrupting devices.

2.3 Applicability of New Protection System Maintenance Standards

The BES purpose is to transfer bulk power. The applicability language has been changed from the original PRC-005:

"*...affecting the reliability of the Bulk Electric System (BES)…*"

To the present language:

"*…that are installed for the purpose of detecting faults on BES Elements (lines, buses, transformers, etc.).*"

The drafting team intends that this Standard will follow with any definition of the Bulk Electric System. There should be no ambiguity; if the element is a BES element then the Protection System protecting that element should then be included within this Standard. If there is regional variation to the definition then there will be a corresponding regional variation to the Protection Systems that fall under this Standard.

There is no way for the Standard Drafting Team to know whether a specific 230KV line, 115KV line (even 69KV line), for example, should be included or excluded. Therefore, the team set the clear intent that the Standard language should simply be applicable to relays for BES elements.

The BES is a NERC defined term that, from time to time, may undergo revisions. Additionally, there may even be regional variations that are allowed in the present and future definitions. See the NERC glossary of terms for the present, in-force, definition. See the applicable regional reliability organization for any applicable allowed variations.

While this Standard will undergo revisions in the future, this Standard will not attempt to keep up with revisions to the NERC definition of BES but rather simply make BES Protection Systems applicable.

The Standard is applied to Generator Owners (GO) and Transmission Owners (TO) because GO's and TO's have equipment that is BES equipment. The Standard brings in Distribution Providers (DP) because depending on the station configuration of a particular substation, there may be Protection System equipment installed at a non-transmission voltage level (Distribution Provider equipment) that is wholly or partially installed to protect the BES. PRC-005-2 would apply to this equipment. An example is underfrequency load-shedding, which is frequently applied well down into the distribution system to meet PRC-007-0.

As this Standard is intended to replace the existing PRC-005, PRC-008, PRC-011 and PRC-017, those Standards are used in the construction of this revision of PRC-005-1. Much of the original intent of those Standards was carried forward whenever it was possible to continue the intent without a disagreement with FERC Order 693. For example the original PRC-008 was constructed quite differently than the original PRC-005. The drafting team agrees with the intent of this and notes that distributed tripping schemes would have to exhibit multiple failures to trip before they would prove to be significant as opposed to a single failure to trip of, for example, a Transmission Protection System Bus Differential lock-out relay. While many failures of these distribution breakers could add up to be significant, it is also believed that distribution breakers are operated often on just fault clearing duty and therefore the distribution circuit breakers are operated at least as frequently as any requirements that might have appeared in this Standard.

Additionally, since this Standard will now replace PRC-011 it will be important to make the distinction between under-voltage Protection Systems that protect individual loads and Protection Systems that are UVLS schemes that protect the BES. Any UVLS scheme that had been applicable under PRC-011 will now be applicable under this revision of PRC-005-1. An example of an Under-Voltage Load Shedding scheme that is not applicable to this Standard is one in which the tripping action was intended to prevent low distribution voltage to a specific load from a transmission system that was intact except for the line that was out of service, as opposed to preventing a cascading outage or transmission system collapse.

It had been correctly noted that the devices needed for PRC-011 are the very same types of devices needed in PRC-005.

Thus a Standard written for Protection Systems of the BES can easily make the needed requirements for Protection Systems and replace some other Standards at the same time.

2.3.1 Frequently Asked Questions:

What, exactly, is the BES, or Bulk Electric System?
BES is the abbreviation for Bulk Electric System. BES is a term in the Glossary of Terms used in Reliability Standards, and is not being modified within this draft Standard.
NERC's approved definition of Bulk Electric System is:

As defined by the Regional Reliability Organization, the electrical generation resources, transmission lines, interconnections with neighboring systems, and associated equipment, generally operated at voltages of 100 kV or higher. Radial transmission facilities serving only load with one transmission source are generally not included in this definition.

Each Regional Entity implements a definition of the Bulk Electric System that is based on this NERC definition, in some cases, supplemented by additional criteria. These regional definitions have been documented and provided to FERC as part of a *June 14, 2007 Informational Filing*.

Why is Distribution Provider included within the Applicable Entities and as a responsible entity within several of the requirements? Wouldn't anyone having relevant facilities be a Transmission Owner?
Depending on the station configuration of a particular substation, there may be Protection System equipment installed at a non-transmission voltage level (Distribution Provider equipment) that is wholly or partially installed to protect the BES. PRC-005-2 would apply to this equipment. An example is underfrequency load-shedding, which is frequently applied well down into the distribution system to meet PRC-007-0.

We have an Under Voltage Load Shedding (UVLS) system in place that prevents one of our distribution substations from supplying extremely low voltage in the case of a specific transmission line outage. The transmission line is part of the BES. Does this mean that our UVLS system falls within this Standard?
The situation as stated indicates that the tripping action was intended to prevent low distribution voltage to a specific load from a transmission system that was intact except for the line that was out of service, as opposed to preventing cascading outage or transmission system collapse. This Standard is not applicable to this UVLS.

We have a UFLS scheme that sheds the necessary load through distribution-side circuit breakers and circuit reclosers. Do the trip-test requirements for circuit breakers apply to our situation?
No. Distributed tripping schemes would have to exhibit multiple failures to trip before they would prove to be significant as opposed to a single failure to trip of, for example, a Transmission Protection System Bus Differential lock-out relay. While many failures of these distribution breakers could add up to be significant, it is also believed that distribution breakers are operated often on just fault clearing duty and therefore the distribution circuit breakers are operated at least as frequently as any requirements that might have appeared in this Standard.

We have a UFLS scheme that, in some locales, sheds the necessary load through non-BES circuit breakers and occasionally even circuit switchers. Do the trip-test requirements for circuit breakers apply to our situation?
If your "non-BES circuit breaker" has been brought into this standard by the inclusion of UFLS requirements and otherwise would not have been brought into this standard, then the answer is that there are no trip-test requirements. For these devices that are otherwise non-BES assets, these tripping schemes would have to exhibit multiple failures to trip before they would prove to be as significant as (for example) a single failure to trip of a Transmission Protection System Bus Differential lock-out relay.

2.4 Applicable Relays

The NERC Glossary definition has a Protection System including relays, dc supply, current and voltage sensing devices, dc control circuitry and associated communications circuits. The relays to which this Standard applies are those protective relays that respond to electrical quantities and provide a trip output to trip coils, dc control circuitry or associated communications equipment. This definition extends to IEEE device # 86 (lockout relay) and IEEE device # 94 (tripping or trip-free relay) as these devices are tripping relays that respond to the trip signal of the protective relay that processed the signals from the current and voltage sensing devices.

Relays that respond to non-electrical inputs or impulses (such as, but not limited to, vibration, pressure, seismic, thermal or gas accumulation) are not included.

2.4.1 Frequently Asked Questions:

Are power circuit reclosers, reclosing relays, closing circuits and auto-restoration schemes covered in this Standard?

No. As stated in Requirement R1, this Standard covers protective relays that use measurements of electrical quantities to determine anomalies and to trip a portion of the BES. Reclosers, reclosing relays, closing circuits and auto-restoration schemes are used to cause devices to close as opposed to electrical-measurement relays and their associated circuits that cause circuit interruption from the BES; such closing devices and schemes are more appropriately covered under other NERC Standards. There is one notable exception: if a Special Protection System incorporates automatic closing of breakers, the related closing devices are part of the SPS and must be tested accordingly.

I use my protective relays only as sources of metered quantities and breaker status for SCADA and EMS through a substation distributed RTU or data concentrator to the control center. What are the maintenance requirements for the relays?

This Standard addresses only devices "that are applied on, or are designed to provide protection for the BES." Protective relays, providing only the functions mentioned in the question, are not included.

Is a Sudden Pressure Relay an auxiliary tripping relay?

No. IEEE C37.2-2008 assigns the device number 94 to auxiliary tripping relays. Sudden pressure relays are assigned device number 63. Sudden pressure relays are excluded from the Standard because it does not utilize voltage and/or current measurements to determine anomalies. Devices that use anything other than electrical detection means are excluded.

My mechanical device does not operate electrically and does not have calibration settings; what maintenance activities apply?

You must conduct a test(s) to verify the integrity of the trip circuit. This Standard does not cover circuit breaker maintenance or transformer maintenance. The Standard also does not cover testing of devices such as sudden pressure relays (63), temperature relays (49), and other relays which respond to mechanical parameters rather than electrical parameters.

The Standard specifically mentions auxiliary and lock-out relays; what is an auxiliary tripping relay?
An auxiliary relay, IEEE Device Number 94, is described in IEEE Standard C37.2-2008 as "A device that functions to trip a circuit breaker, contactor, or equipment; to permit immediate tripping by other devices; or to prevent immediate reclosing of a circuit interrupter if it should open automatically, even though its closing circuit is maintained closed."

What is a lock-out relay?
A lock-out relay, IEEE Device Number 86, is described in IEEE Standard C37.2 as "A device that trips and maintains the associated equipment or devices inoperative until it is reset by an operator, either locally or remotely."

3. Protection Systems Product Generations

The likelihood of failure and the ability to observe the operational state of a critical Protection System, both depends on the technological generation of the relays as well as how long they have been in service. Unlike many other transmission asset groups, protection and control systems have seen dramatic technological changes spanning several generations. During the past 20 years, major functional advances are primarily due to the introduction of microprocessor technology for power system devices such as primary measuring relays, monitoring devices, control systems, and telecommunications equipment.

Modern microprocessor based relays have six significant traits that impact a maintenance strategy:

- Self monitoring capability - the processors can check themselves, peripheral circuits, and some connected substation inputs and outputs such as trip coil continuity. Most relay users are aware that these relays have self monitoring, but are not focusing on exactly what internal functions are actually being monitored. As explained further below, every element critical to the Protection System must be monitored, or else verified periodically.
- Ability to capture fault records showing how the Protection System responded to a fault in its zone of protection, or to a nearby fault for which it is required not to operate.
- Ability to meter currents and voltages, as well as status of connected circuit breakers, continuously during non-fault times. The relays can compute values such as MW and MVAR line flows that are sometimes used for operational purposes such as SCADA.
- Data communications via ports that provide remote access to all of the results of Protection System monitoring, recording, and measurement.
- Ability to trip or close circuit breakers and switches through the Protection System outputs, on command from remote data communications messages or from relay front panel button requests.

- Construction from electronic components some of which have shorter technical life or service life than electromechanical components of prior Protection System generations.

There have been significant advances in the technology behind the other components of Protection Systems. Microprocessors are now a part of Battery Chargers, Associated Communications Equipment, Voltage and Current Measuring Devices and even the control circuitry (in the form of software-latches replacing lock-out relays, etc).

Any Protection System component can have self-monitoring and alarming capability, not just relays. Because of this technology, extended time intervals can find their way into all components of the Protection System.

4. Definitions

Protection System Maintenance Program (PSMP) — An ongoing program by which Protection System components are kept in working order and proper operation of malfunctioning components is restored. A maintenance program for a specific component includes one or more of the following activities:

- Verify — Determine that the component is functioning correctly.
- Monitor — Observe the routine in-service operation of the component.
- Test — Apply signals to a component to observe functional performance or output behavior, or to diagnose problems.
- Inspect — Detect visible signs of component failure, reduced performance and degradation.
- Calibrate — Adjust the operating threshold or measurement accuracy of a measuring element to meet the intended performance requirement.
- Restore — Return malfunctioning components to proper operation.

4.1 Frequently Asked Questions:

Why does PRC-005-2 not specifically require maintenance and testing procedures as reflected in the previous Standard, PRC-005-1?

PRC-005-1 does not require detailed maintenance and testing procedures, but instead requires summaries of such procedures, and is not clear on what is actually required. PRC-005-2 requires a documented maintenance program, and is focused on establishing requirements rather than prescribing methodology to meet those requirements. Between the activities identified in the tables 1-1 through 1-5 and Table 2 (collectively the "Tables"), and the various components of the definition established for a "Protection System Maintenance Program", PRC-005-2 establishes the activities and time-basis for a Protection System Maintenance Program to a level of detail not previously required.

Please clarify what is meant by restore in the definition of maintenance.

The description of "Restore" in the definition of a Protection System Maintenance Program, addresses corrective activities necessary to assure that the component is returned to working order following the discovery of its failure or malfunction. The Maintenance Activities specified in the Tables do not present any requirements related to Restoration; R3 of the Standard does require that the entity "initiate resolution of any identified maintenance correctable issues". Some examples of restoration (or correction of maintenance-correctable issues) include, but are not limited to, replacement of capacitors in distance relays to bring them to working order; replacement of relays, or other Protection System components, to bring the Protection System to working order; upgrade of electromechanical or solid-state protective relays to micro-processor based relays following the discovery of failed components. Restoration, as used in this context is not to be confused with Restoration rules as used in system operations. Maintenance activity necessarily includes both the detection of problems and the repairs needed to eliminate those problems. This Standard does not identify all of the Protection System problems that must be detected and eliminated, rather it is the intent of this Standard that an entity determines the necessary working order for their various devices and keeps them in working order. If an equipment item is repaired or replaced then the entity can restart the maintenance-time-interval-clock if desired, however the replacement of equipment does not remove any documentation requirements that would have been required to verify compliance with time-interval requirements; in other words do not discard maintenance data that goes to verify your work.

The retention of documentation for new and/or replaced equipment is all about proving that the maintenance intervals had been in compliance. For example, a long range plan of upgrades might lead an entity to ignore required maintenance; retaining the evidence of prior maintenance that existed before any retirements and upgrades proves compliance with the Standard.

5. Time-Based Maintenance (TBM) Programs

Time-based maintenance is the process in which Protection Systems are maintained or verified according to a time schedule. The scheduled program often calls for technicians to travel to the physical site and perform a functional test on Protection System components. However, some components of a TBM program may be conducted from a remote location - for example, tripping a circuit breaker by communicating a trip command to a microprocessor relay to determine if the entire Protection System tripping chain is able to operate the breaker. Similarly, all Protection System components can have the ability to remotely conduct tests, either on-command or routinely, the running of these tests can extend the time interval between hands-on maintenance activities.

5.1 Maintenance Practices

Maintenance and testing programs often incorporate the following types of maintenance practices:

- TBM – time-based maintenance – externally prescribed maximum maintenance or testing intervals are applied for components or groups of components. The intervals may have been developed from prior experience or manufacturers' recommendations. The TBM verification interval is based on a variety of factors, including experience of the particular asset owner, collective experiences of several asset owners who are members of a country or regional council, etc. The maintenance intervals are fixed, and may range in number of months or in years.

  TBM can include review of recent power system events near the particular terminal. Operating records may verify that some portion of the Protection System has operated correctly since the last test occurred. If specific protection scheme components have demonstrated correct performance within specifications, the maintenance test time clock can be reset for those components.

- PBM – Performance-Based Maintenance - intervals are established based on analytical or historical results of TBM failure rates on a statistically significant population of similar components. Some level of TBM is generally followed. Statistical analyses accompanied by adjustments to maintenance intervals are used to justify continued use of PBM-developed extended intervals when test failures or in-service failures occur infrequently.

- CBM – condition-based maintenance – continuously or frequently reported results from non-disruptive self monitoring of components demonstrate operational status as those components remain in service. Whatever is verified by CBM does not require manual testing, but taking advantage of this requires precise technical focus on exactly what parts are included as part of the self diagnostics. While the term "Condition-Based-Maintenance" (CBM) is no longer used within the Standard itself, it is important to note that the concepts of CBM are a part of the Standard (in the form of extended time intervals through status-monitoring). These extended time intervals are only allowed (in the absence of PBM) if the condition of the device is monitored (CBM). As a consequence of the "monitored-basis-time-intervals" existing within the Standard the explanatory discussions within this Supplementary Reference concerned with CBM will remain in this reference and are discussed as CBM.

  Microprocessor based Protection System components that perform continuous self-monitoring verify correct operation of most components within the device. Self-monitoring capabilities may include battery continuity, float voltages, unintentional grounds, the ac signal inputs to a relay, analog measuring circuits, processors and memory for measurement, protection, and data communications, trip circuit monitoring, and protection or data communications signals (and many, many more measurements). For those conditions, failure of a self-monitoring routine generates an alarm and may inhibit operation to avoid false trips. When internal components, such as critical output relay contacts, are not equipped with self-monitoring, they can be manually tested. The method of testing may be local or remote, or through inherent performance of the scheme during a system event.

The TBM is the overarching maintenance process of which the other types are subsets. Unlike TBM, PBM intervals are adjusted based on good or bad experiences. The CBM verification intervals can be hours or even milliseconds between non-disruptive self monitoring checks within or around components as they remain in service.

TBM, PBM, and CBM can be combined for individual components, or within a complete Protection System. The following diagram illustrates the relationship between various types of maintenance practices described in this section. In the Venn diagram the overlapping regions show the relationship of TBM with PBM historical information and the inherent continuous monitoring offered through CBM.

This figure shows:

- Region 1: The TBM intervals that are increased based on known reported operational condition of individual components that are monitoring themselves.
- Region 2: The TBM intervals that are adjusted up or down based on results of analysis of maintenance history of statistically significant population of similar products that have been subject to TBM.
- Region 3: Optimal TBM intervals based on regions 1 and 2.

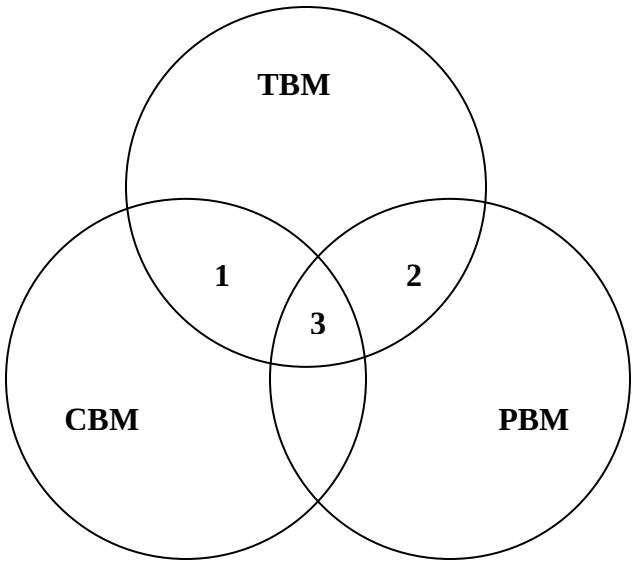

Relationship of time-based maintenance types

5.1.1 Frequently Asked Questions:

The Standard seems very complicated, and is difficult to understand. Can it be simplified?

Because the Standard is establishing parameters for condition-based Maintenance (R1) and Performance-Based Maintenance (R2) in addition to simple time-based Maintenance, it does appear to be complicated. At its simplest, an entity needs to ONLY perform time-based maintenance according to the unmonitored rows of the Tables. If an entity then wishes to take advantage of monitoring on its Protection System components and its available lengthened time intervals then it may, as long as the component has the listed monitoring attributes. If an entity wishes to use historical performance of its Protection System components to perform Performance-Based Maintenance, then R2 applies.

Please see the following diagram, which provides a “flow chart” of the Standard.

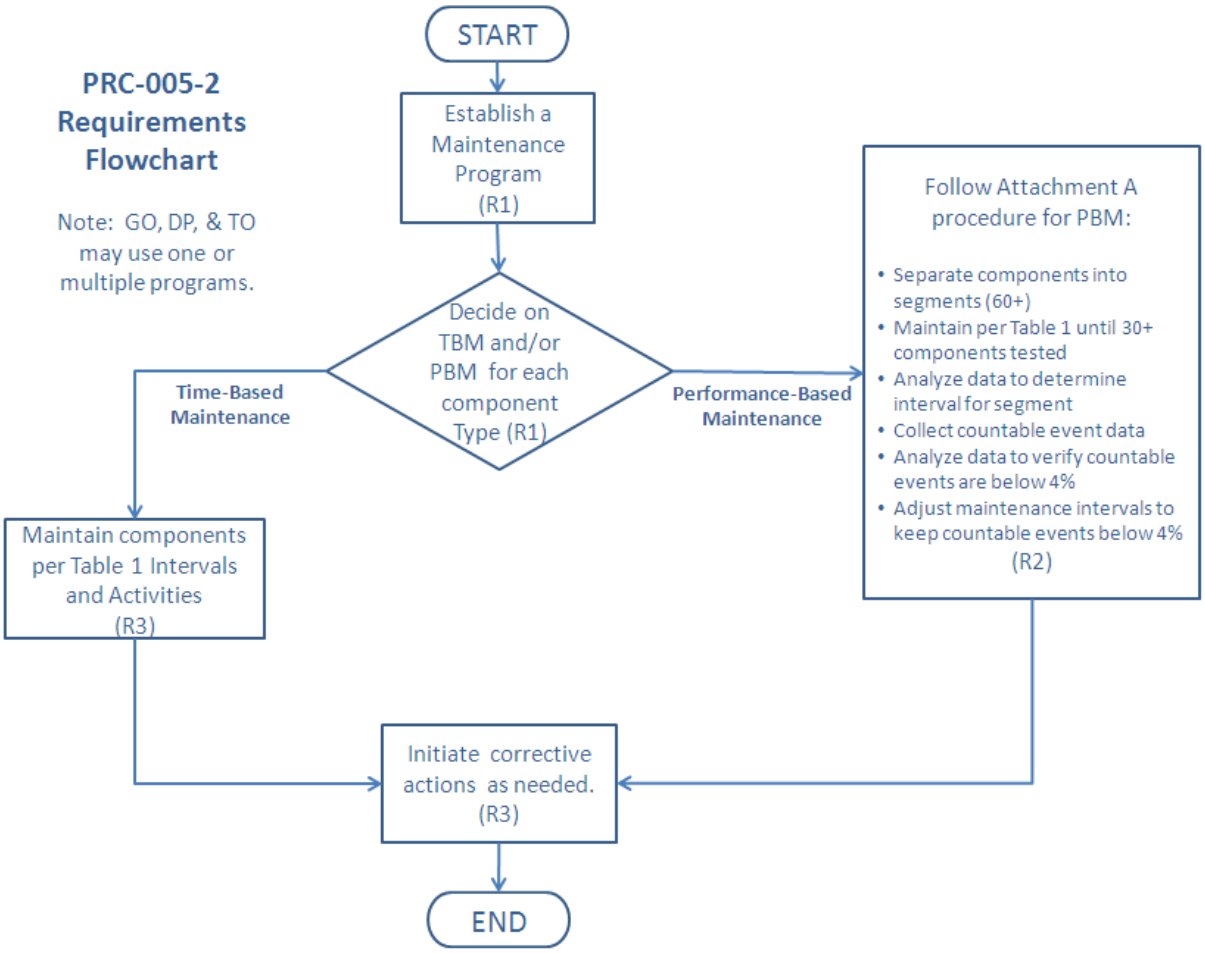

We have an electromechanical (unmonitored) relay that has a trip output to a lockout relay (unmonitored) which trips our transformer off-line by tripping the transformer's high-side and low-side circuit breakers. What testing must be done for this system?
This system is made up of components that are all unmonitored. Assuming a time-based Protection System maintenance program schedule (as opposed to a Performance-Based maintenance program), each component must be maintained per the most frequent hands-on activities listed in the Tables 1-1 through 1-5.

5.2 Extending Time-Based Maintenance

All maintenance is fundamentally time-based. Default time-based intervals are commonly established to assure proper functioning of each component of the Protection System, when data on the reliability of the components is not available other than observations from time-based maintenance. The following factors may influence the established default intervals:

- If continuous indication of the functional condition of a component is available (from relays or chargers or any self monitoring device), then the intervals may be extended or

manual testing may be eliminated. This is referred to as condition-based maintenance or CBM. CBM is valid only for precisely the components subject to monitoring. In the case of microprocessor-based relays, self-monitoring may not include automated diagnostics of every component within a microprocessor.

- Previous maintenance history for a group of components of a common type may indicate that the maintenance intervals can be extended while still achieving the desired level of performance. This is referred to as Performance-Based Maintenance or PBM. It is also sometimes referred to as reliability-centered maintenance or RCM, but PBM is used in this document.
- Observed proper operation of a component may be regarded as a maintenance verification of the respective component or element in a microprocessor-based device. For such an observation, the maintenance interval may be reset only to the degree that can be verified by data available on the operation. For example, the trip of an electromechanical relay for a fault verifies the trip contact and trip path, but only through the relays in series that actually operated; one operation of this relay cannot verify correct calibration.

Excessive maintenance can actually decrease the reliability of the component or system. It is not unusual to cause failure of a component by removing it from service and restoring it. The improper application of test signals may cause failure of a component. For example, in electromechanical overcurrent relays, test currents have been known to destroy convolution springs.

In addition, maintenance usually takes the component out of service, during which time it is not able to perform its function. Cutout switch failures, or failure to restore switch position, commonly lead to protection failures.

5.2.1 Frequently Asked Question:

If I show the protective device out of service while it is being repaired then can I add it back as a new protective device when it returns? If not, my relay testing history would show that I was out of compliance for the last maintenance cycle.

The maintenance and testing requirements (R3) (in essence) state "…shall implement and follow its PSMP …" if not then actions must be initiated to correct the deviance. The type of corrective activity is not stated; however it could include repairs or replacements.

Your documentation requirements will increase, of course, to demonstrate that your device tested bad and had corrective actions initiated. Your regional entity could very well ask for documentation showing status of your corrective actions.

6. Condition-Based Maintenance (CBM) Programs

Condition-based maintenance is the process of gathering and monitoring the information available from modern microprocessor-based relays and other intelligent electronic devices (IEDs) that monitor Protection System elements. These devices generate monitoring information during normal operation, and the information can be assessed at a convenient location remote from the substation. The information from these relays and IEDs is divided into two basic types:

1. Information can come from background self-monitoring processes, programmed by the manufacturer, or by the user in device logic settings. The results are presented by alarm contacts or points, front panel indications, and by data communications messages.
2. Information can come from event logs, captured files, and/or oscillographic records for faults and disturbances, metered values, and binary input status reports. Some of these are available on the device front panel display, but may be available via data communications ports. Large files of fault information can only be retrieved via data communications. These results comprise a mass of data that must be further analyzed for evidence of the operational condition of the Protection System.

Using these two types of information, the user can develop an effective maintenance program carried out mostly from a central location remote from the substation. This approach offers the following advantages:

1. Non-invasive Maintenance: The system is kept in its normal operating state, without human intervention for checking. This reduces risk of damage, or risk of leaving the system in an inoperable state after a manual test. Experience has shown that keeping human hands away from equipment known to be working correctly enhances reliability.
2. Virtually Continuous Monitoring: CBM will report many hardware failure problems for repair within seconds or minutes of when they happen. This reduces the percentage of problems that are discovered through incorrect relaying performance. By contrast, a hardware failure discovered by TBM may have been there for much of the time interval between tests, and there is a good chance that some devices will show health problems by incorrect operation before being caught in the next test round. The frequent or continuous nature of CBM makes the effective verification interval far shorter than any required TBM maximum interval.

6.1 Frequently Asked Questions:

My microprocessor relays and dc circuit alarms are contained on relay panels in a 24-hour attended control room. Does this qualify as an extended time interval condition-based system?
Yes, provided the station attendant (plant operator, etc.) monitors the alarms and other indications (comparable to the monitoring attributes) and reports them within the given time limits that are stated in the criteria of the Tables.

When documenting the basis for inclusion of components into the appropriate levels of monitoring as per Requirement R1.4 of the Standard, is it necessary to provide this documentation about the device by listing of every component and the specific monitoring attributes of each device?
No. While maintaining this documentation on the device level would certainly be permissible, it is not necessary. Global statements can be made to document appropriate levels of monitoring for the entire population of a component type or portion thereof.

For example, it would be permissible to document the conclusion that all BES substation dc supply battery chargers are Monitored by stating the following within the program description:

> "All substation dc supply battery chargers are considered Monitored and subject to the rows for monitored equipment of Table 1-4 requirements as all substation dc supply battery chargers are equipped with dc voltage alarms and ground detection alarms that are sent to the manned control center."

Similarly, it would be acceptable to use a combination of a global statement and a device level list of exclusions. Example:

> "Except as noted below, all substation dc supply battery chargers are considered Monitored and subject to the rows for monitored equipment of Table 1-4 requirements as all substation dc supply battery chargers are equipped with dc voltage alarms and ground detection alarms that are sent to the manned control center. The dc supply battery chargers of Substation X, Substation Y, and Substation Z are considered Unmonitored and subject to the rows for unmonitored equipment in Table 1-4 requirements as they are not equipped with ground detection capability."

Regardless whether this documentation is provided by device listing of monitoring attributes, by global statements of the monitoring attributes of an entire population of component types, or by some combination of these methods, it should be noted that auditors may request supporting drawings or other documentation necessary to validate the inclusion of the device(s) within the appropriate level of monitoring. This supporting background information need not be maintained within the program document structure but should be retrievable if requested by an auditor.

7. Time-Based Versus Condition-Based Maintenance

Time-based and condition-based maintenance programs are both acceptable, if implemented according to technically sound requirements. Practical programs can employ a *combination of time-based and condition-based maintenance.* The Standard requirements introduce the concept of optionally using condition monitoring as a documented element of a maintenance program.

The Federal Energy Regulatory Commission (FERC), in its Order Number 693 Final Rule dated March 16, 2007 (18 CFR Part 40, Docket No. RM06-16-000) on Mandatory Reliability Standards for the Bulk-Power System, directed NERC to submit a modification to PRC-005-1 that includes a requirement that maintenance and testing of a Protection System must be carried out within a maximum allowable interval that is appropriate to the type of the Protection System and its impact on the reliability of the Bulk Power System. Accordingly, this Supplementary Reference Paper refers to the specific maximum allowable intervals in PRC-005-2. The defined time limits allow for longer time intervals if the maintained component is monitored.

A key feature of condition-based monitoring is that it effectively reduces the time delay between the moment of a protection failure and time the Protection System owner knows about it, for the monitored segments of the Protection System. In some cases, the verification is practically continuous - the time interval between verifications is minutes or seconds. Thus, technically sound, condition-based verification, meets the verification requirements of the FERC order even more effectively than the strictly time-based tests of the same system components.

The result is that:

This NERC Standard permits utilities to use a technically sound approach and to take advantage of remote monitoring, data analysis, and control capabilities of modern Protection Systems to reduce the need for periodic site visits and invasive testing of components by on-site technicians. This periodic testing must be conducted within the maximum time intervals specified in Tables 1-1 through 1-5 and Table 2 of PRC-005-2.

7.1 Frequently Asked Questions:

What is a Calendar Year?
Calendar Year - January 1 through December 31 of any year. As an example, if an event occurred on June 17, 2009 and is on a “One Calendar Year Interval”, the next event would have to occur on or before December 31, 2010.

Please provide an example of “3 Calendar Months”.
If a maintenance activity is described as being needed every 3 Calendar Months then it is performed in a (given) month and due again 3 months later. For example a battery bank is inspected in month number 1 then it is due again in month number 4. And specifically consider that you perform your battery inspection on January 3, 2010 then it must be inspected again before the end of April. Another example could be that a 3-month inspection was performed in January is due in April, but if performed in March (instead of April) would still be due three

months later therefore the activity is due again June. Basically every "3 Calendar Months" means to add 3 months from the last time the activity was performed.

Please provide an example of the unmonitored versus other levels of monitoring available?
An unmonitored Protection System has no monitoring and alarm circuits on the Protection System components. A Protection System component that has monitoring attributes but no alarm output connected is considered to be unmonitored.

A monitored Protection System or an individual monitored component of a Protection System has monitoring and alarm circuits on the Protection System components. The alarm circuits must alert, within 24 hours, a location wherein corrective action can be initiated. This location might be, but not limited to an Operations Center, Dispatch Office, Maintenance Center or even a portable SCADA system.

There can be a combination of monitored and unmonitored Protection Systems within any given scheme, substation or plant; there can also be a combination of monitored and unmonitored components within any given Protection System.

Example #1: A combination of monitored and unmonitored components within a given Protection System might be:

- A microprocessor relay with an internal alarm connected to SCADA to alert 24-hr staffed operations center; it has internal self diagnosis and alarming. (monitored)
- Instrumentation transformers, with no monitoring, connected as inputs to that relay. (unmonitored)
- A Vented Lead-Acid battery with a low voltage alarm for the station dc supply voltage and an unintentional grounds detection alarm connected to SCADA. (monitoring varies)
- A circuit breaker with a trip coil and the trip circuit is not monitored. (unmonitored)

Given the particular components and conditions, and using Table 1 and Table 2 , the particular components have maximum activity intervals of:

Every 3 calendar months, verify:

- Electrolyte level (station dc supply voltage and unintentional ground detection is being maintained more frequently by the monitoring system).

Every 18 calendar months, verify/inspect the following:

- Battery bank ohmic values to station battery baseline (if performance tests are not opted)
- Battery charger float voltage
- Battery rack integrity
- Cell condition of all individual battery cells (where visible)
- Battery continuity
- Battery terminal connection resistance

- Battery cell-to-cell resistance (where available to measure)

Every 6 calendar years, perform/verify the following:

- Battery performance test (if ohmic tests are not opted)
- Verify that each trip coil is able to operate the circuit breaker, interrupting device, or mitigating device
- For electromechanical lock-out relays and auxiliary relays, electrical operation of electromechanical trip and auxiliary devices

Every 12 calendar years, verify the following:

- Microprocessor relay settings are as specified
- Operation of the microprocessor's relay inputs and outputs that are essential to proper functioning of the Protection System
- Acceptable measurement of power system input values seen by the microprocessor protective relay
- Verify that current and voltage signal values are provided to the protective relays
- Protection System component monitoring for the battery system signals are conveyed to a location where corrective action can be initiated
- The microprocessor relay alarm signals are conveyed to a location where corrective action can be initiated
- Verify all paths in the control circuitry associated with protective functions through the trip coil(s) of the circuit breakers or other interrupting devices

Example #2: A combination of monitored and unmonitored components within a given Protection System might be:

- A microprocessor relay with integral alarm that is not connected to SCADA. (unmonitored)
- Current and voltage signal values, with no monitoring, connected as inputs to that relay. (unmonitored)
- A Vented Lead-Acid battery with a low voltage alarm for the station dc supply voltage and an unintentional grounds detection alarm connected to SCADA. (monitoring varies)
- A circuit breaker with a trip coil, with no circuits monitored. (unmonitored)

Given the particular components and conditions, and using the Table 1 ("Maximum Allowable Testing Intervals and Maintenance Activities") and Table 2 ("Alarming Paths and Monitoring"), the particular components have maximum activity intervals of:

Every 3 calendar months, verify:

- Electrolyte level (Station dc supply voltage and unintentional ground detection is being maintained more frequently by the monitoring system)

Every 18 calendar months, verify/inspect the following:

- Battery bank ohmic values to station battery baseline (if performance tests are not opted)
- Battery charger float voltage
- Battery rack integrity
- Cell condition of all individual battery cells (where visible)
- Battery continuity
- Battery terminal connection resistance
- Battery cell-to-cell resistance (where available to measure)

Every 6 calendar years, verify/perform the following:

- Verify operation of the relay inputs and outputs that are essential to proper functioning of the Protection System
- Verify acceptable measurement of power system input values as seen by the relays
- Verify that each trip coil is able to operate the circuit breaker, interrupting device, or mitigating device
- For electromechanical lock-out relays and auxiliary relays, electrical operation of electromechanical trip and auxiliary devices
- Battery performance test (if ohmic tests are not opted)

Every 12 calendar years, verify the following:

- Verify that current and voltage signal values are provided to the protective relays
- Verify that Protection System component monitoring for the battery system signals are conveyed to a location where corrective action can be initiated
- Verify all paths in the control circuitry associated with protective functions through the trip coil(s) of the circuit breakers or other interrupting devices **Example #3:** A combination of monitored and unmonitored components within a given Protection System might be:
    - A microprocessor relay with alarm connected to SCADA to alert 24-hr staffed operations center; it has internal self diagnosis and alarms. (monitored)
    - Current and voltage signal values, with monitoring, connected as inputs to that relay (monitored)
    - Vented Lead-Acid battery without any alarms connected to SCADA (unmonitored)
    - Circuit breaker with a trip coil, with no circuits monitored (unmonitored)

Given the particular components, conditions, and using the Table 1 ("Maximum Allowable Testing Intervals and Maintenance Activities") and Table 2 ("Alarming Paths and Monitoring"), the particular components shall have maximum activity intervals of:

Every 3 calendar months, verify/inspect the following:

- Station dc supply voltage
- For unintentional grounds
- Electrolyte level

Every 18 calendar months, verify/inspect the following:

- Battery bank ohmic values to station battery baseline (if performance tests are not opted)
- Battery charger float voltage
- Battery rack integrity
- Battery continuity
- Battery terminal connection resistance
- Battery cell-to-cell resistance (where available to measure)
- Cell condition of all individual battery cells (where visible)

Every 6 calendar years, perform/verify the following:

- Battery performance test (if ohmic tests are not opted)
- Verify that each trip coil is able to operate the circuit breaker, interrupting device, or mitigating device
- For electromechanical lock-out relays and auxiliary relays, electrical operation of electromechanical trip and auxiliary devices

Every 12 calendar years, verify the following:

- The microprocessor relay alarm signals are conveyed to a location where corrective action can be taken
- Microprocessor relay settings are as specified
- Operation of the microprocessor's relay inputs and outputs that are essential to proper functioning of the Protection System
- Acceptable measurement of power system input values seen by the microprocessor protective relay
- Verify all paths in the control circuitry associated with protective functions through the trip coil(s) of the circuit breakers or other interrupting devices

Why do components have different maintenance activities and intervals if they are monitored?

The intent behind different activities and intervals for monitored equipment is to allow less frequent manual intervention when more information is known about the condition of Protection System components. Condition-Based Maintenance is a valuable asset to improve reliability.

Can all components in a Protection System be monitored?

No. For some components in a Protection System, monitoring will not be relevant. For example a battery will always need some kind of inspection.

We have a 30 year old oil circuit breaker with a red indicating lamp on the substation relay panel that is illuminated only if there is continuity through the breaker trip coil. There is no SCADA monitor or relay monitor of this trip coil. The line protection relay package that trips this circuit breaker is a microprocessor relay that has an integral alarm relay that will assert on a number of conditions that includes a loss of power to the relay. This alarm contact connects to our SCADA system and alerts our 24-hour operations center of relay trouble when the alarm contact closes. This microprocessor relay trips the circuit breaker only and does not monitor trip coil continuity or other things such as trip current. Are the components monitored or not? How often must I perform maintenance?
The protective relay is monitored and can be maintained every 12 years or when a maintenance correctable issue arises. The control circuitry can be maintained every 12 years. The trip coil(s) has to be electrically operated at least once every 6 years.

8. Maximum Allowable Verification Intervals

The Maximum Allowable Testing Intervals and Maintenance Activities show how CBM with newer device types can reduce the need for many of the tests and site visits that older Protection System components require. As explained below, there are some sections of the Protection System that monitoring or data analysis may not verify. Verifying these sections of the Protection Systems requires some persistent TBM activity in the maintenance program. However, some of this TBM can be carried out remotely - for example, exercising a circuit breaker through the relay tripping circuits using the relay remote control capabilities can be used to verify function of one tripping path and proper trip coil operation, if there has been no fault or routine operation to demonstrate performance of relay tripping circuits.

8.1 Maintenance Tests

Periodic maintenance testing is performed to ensure that the protection and control system is operating correctly after a time period of field installation. These tests may be used to ensure that individual components are still operating within acceptable performance parameters - this type of test is needed for components susceptible to degraded or changing characteristics due to aging and wear. Full system performance tests may be used to confirm that the total Protection System functions from measurement of power system values, to properly identifying fault characteristics, to the operation of the interrupting devices.

8.1.1 Table of Maximum Allowable Verification Intervals

Table 1 (collectively known as Table 1, individually called out as Tables 1-1 through 1-5), in the Standard, specifies maximum allowable verification intervals for various generations of Protection Systems and categories of equipment that comprise Protection Systems. The right column indicates maintenance activities required for each category.

The types of components are illustrated in Figures 1 and 2 at the end of this paper. Figure 1 shows an example of telecommunications-assisted line Protection System comprising substation equipment at each terminal and a telecommunications channel for relaying between the two substations. Figure 2 shows an example of a Generation station layout. The various subsystems of a Protection System that need to be verified are shown. UFLS, UVLS, and SPS are additional categories of Table 1 that are not illustrated in these figures. UFLS, UVLS and SPS all use identical equipment as Protection Systems in the performance of their functions and therefore have the same maintenance needs.

While it is easy to associate protective relays to multiple levels of monitoring, it is also true that most of the components that can make up a Protection System can also have technological advancements that place them into higher levels of monitoring.

To use the Maintenance Activities and Intervals Tables from PRC-005-2:

- First find the Table associated with your component. The tables are arranged in the order of mention in the definition of Protection System;
    - Table 1-1 is for protective relays,
    - Table 1-2 is for the associated communications systems,
    - Table 1-3 is for current and voltage sensing devices,
    - Table 1-4 is for station dc supply and
    - Table 1-5 is for control circuits. There is an additional table,
    - Table 2, which brings alarms into the maintenance arena; this was broken out to simplify the other tables.
- Next look within that table for your device and its degree of monitoring. The tables have different hands-on maintenance activities prescribed depending upon the degree to which you monitor your equipment. Find the maintenance activity that applies to the monitoring level that you have on your piece of equipment.
- This Maintenance activity is the minimum maintenance activity that must be documented.
- If your PSMP (plan) requires more activities then you must perform and document to this higher standard.
- After the maintenance activity is known, check the Maximum Maintenance Interval; this time is the maximum time allowed between hands-on maintenance activity cycles of this component.
- If your PSMP (plan) requires activities more often than the Tables maximum then you must perform and document those activities to your more stringent standard.
- Any given component of a Protection System can be determined to have a degree of monitoring that may be different from another component within that same Protection System. For example, in a given Protection System it is possible for an entity to have a monitored protective relay and an unmonitored associated communications system; this combination would require hands-on maintenance activity on the relay at least once every 12 years and attention paid to the communications system as often as every 3 months.

- An entity does not have to utilize the extended time intervals made available by this use of condition-based monitoring. An easy choice to make is to simply utilize the unmonitored level of maintenance made available on each of the 5 Tables. While the maintenance activities resulting from this choice would require more maintenance man-hours, the maintenance requirements may be simpler to document and the resulting maintenance plans may be easier to create.

For each Protection System component, Table 1 shows maximum allowable testing intervals for the various degrees of monitoring. These degrees of monitoring, or levels, range from the legacy unmonitored through a system that is more comprehensively monitored.

It has been noted here that an entity may have a PSMP that is more stringent than PRC-005-2. There may be any number of reasons that an entity chooses a more stringent plan than the minimums prescribed within PRC-005-2, most notable of which is an entity using performance based maintenance methodology. (Another reason for having a more stringent plan than is required could be a regional entity could have more stringent requirements.) Regardless of the rationale behind an entity's more stringent plan, it is incumbent upon them to perform the activities, and perform them at the stated intervals, of the entity's PSMP. A quality PSMP will help assure system reliability and adhering to any given PSMP should be the goal.

8.1.2 Additional Notes for Tables 1-1 through 1-5

1. For electromechanical relays, adjustment is required to bring measurement accuracy within the tolerance needed by the asset owner. Microprocessor relays with no remote monitoring of alarm contacts, etc, are unmonitored relays and need to be verified within the Table interval as other unmonitored relays but may be verified as functional by means other than testing by simulated inputs.

2. Microprocessor relays typically are specified by manufacturers as not requiring calibration, but acceptable measurement of power system input values must be verified (verification of the Analog to Digital [A/D] converters) within the Table intervals. The integrity of the digital inputs and outputs that are used as protective functions must be verified within the Table intervals.

3. Any Phasor Measurement Unit (PMU) function whose output is used in a Protection System or SPS (as opposed to a monitoring task) must be verified as a component in a Protection System.

4. In addition to verifying the circuitry that supplies dc to the Protection System, the owner must maintain the station dc supply. The most widespread station dc supply is the station battery and charger. Unlike most Protection System components physical inspection of station batteries for signs of component failure, reduced performance, and degradation are required to ensure that the station battery is reliable enough to deliver dc power when required. IEEE Standards 450, 1188, and 1106 for Vented Lead-Acid, Valve-Regulated Lead-Acid, and Nickel-Cadmium batteries, respectively (which are the most commonly used substation batteries on the NERC BES) have been developed as an important reference source of maintenance recommendations. The Protection System owner might use the applicable IEEE recommended practice which contains information and recommendations concerning the maintenance, testing and replacement of its substation

battery. However, the methods prescribed in these IEEE recommendations cannot be specifically required because they do not apply to all battery applications.

5. Aggregated small entities might distribute the testing of the population of UFLS/UVLS systems, and large entities will usually maintain a portion of these systems in any given year. Additionally, if relatively small quantities of such systems do not perform properly, it will not affect the integrity of the overall program. Thus these distributed systems have decreased requirements as compared to other Protection Systems.
6. Voltage & Current Sensing Device circuit input connections to the Protection System relays can be verified by (but not limited to) comparison of measured values on live circuits or by using test currents and voltages on equipment out of service for maintenance. The verification process can be automated or manual. The values should be verified to be as expected, (phase value and phase relationships are both equally important to verify).
7. "End-to-end test" as used in this Supplementary Reference is any testing procedure that creates a remote input to the local communications-assisted trip scheme. While this can be interpreted as a GPS-type functional test it is not limited to testing via GPS. Any remote scheme manipulation that can cause action at the local trip path can be used to functionally-test the dc Control Circuitry. A documented real-time trip of any given trip path is acceptable in lieu of a functional trip test. It is possible, with sufficient monitoring, to be able to verify each and every parallel trip path that participated in any given dc Control Circuit trip. Or, another possible solution is that a single trip path from a single monitored relay can be verified to be the trip path that successfully tripped during a real-time operation. The variations are only limited by the degree of engineering and monitoring that an entity desires to pursue.
8. A/D verification may use relay front panel value displays, or values gathered via data communications. Groupings of other measurements (such as vector summation of bus feeder currents) can be used for comparison if calibration requirements assure acceptable measurement of power system input values.
9. Notes 1-8 attempt to describe some testing activities; they do not represent the only methods to achieve these activities but rather some possible methods. Technological advances, ingenuity and/or industry accepted techniques can all be used to satisfy maintenance activity requirements; the Standard is technology and method neutral in most cases.

8.1.3 Frequently Asked Questions:

What is meant by "Verify that settings are as specified" maintenance activity in Table 1-1?
Verification of settings is an activity directed mostly towards microprocessor based relays.
For relay maintenance departments that choose to test microprocessor based relays in the same manner as electromechanical relays are tested, the testing process sometimes requires that some specific functions be disabled. Later tests might enable the functions previously disabled but perhaps still other functions or logic statements were then masked out. It is imperative that, when the relay is placed into service, the settings in the relay be the settings that were intended to be in that relay or as the Standard states "…settings are as specified."

Many of the microprocessor based relays available today have software tools which provide this functionality and generate reports for this purpose.

For evidence or documentation of this requirement a simple recorded acknowledgement that the settings were checked to be as specified is sufficient.

The drafting team was careful not to require "…that the relay settings be correct…" because it was believed that this might then place a burden of proof that the specified settings would result in the correct intended operation of the interrupting device. While that is a noble intention, the measurable proof of such a requirement is immense. The intent is that settings of the component be as specified at the conclusion of maintenance activities, whether those settings may have "drifted" since the prior maintenance or whether changes were made as part of the testing process.

Are electromechanical relays included in the "Verify that settings are as specified" maintenance activity in Table 1-1?

Verification of settings is an activity directed towards the application of protection related functions of microprocessor based relays. Electromechanical relays require calibration verification by voltage and/or current injection, and thus the settings are verified during calibration activity. In the example of a time-overcurrent relay, a minor deviation in time dial, versus the settings, may be acceptable as long as the relay calibration is within accepted tolerances at the injected current amplitudes. A major deviation may require further investigation, as it could indicate a problem with the relay or an incorrect relay style for the application.

The verification of phase current and voltage measurements by comparison to other quantities seems reasonable. How, though, can I verify residual or neutral currents, or 3V0 voltages, by comparison, when my system is closely balanced?

Since these inputs are verified at commissioning, maintenance verification requires ensuring that phase quantities are as expected and that 3IO and 3VO quantities appear equal to or close to 0. These quantities also may be verified by use of oscillographic records for connected microprocessor relays as recorded during system disturbances. Such records may compare to similar values recorded at other locations by other microprocessor relays for the same event, or compared to expected values (from short circuit studies) for known fault locations.

What does this Standard require for testing an auxiliary tripping relay?

Table 1 requires that a trip test must verify that the auxiliary tripping relay(s) and/or lockout relay(s) which are directly in a trip path from the protective relay to the interrupting device trip coil operate(s) electrically. Auxiliary outputs not in a trip path (i.e. annunciation or DME input) are not required, by this Standard, to be checked.

Do I have to perform a full end-to-end test of a Special Protection System?

No. All portions of the SPS need to be maintained, and the portions must overlap, but the overall SPS does not need to have a single end-to-end test. In other words it may be tested in piecemeal fashion provided all of the pieces are verified.

What about SPS interfaces between different entities or owners?
As in all of the Protection System requirements, SPS segments can be tested individually thus minimizing the need to accommodate complex maintenance schedules.

What do I have to do if I am using a phasor measurement unit (PMU) as part of a Protection System or Special Protection System?
Any Phasor Measurement Unit (PMU) function whose output is used in a Protection System or Special Protection System (as opposed to a monitoring task) must be verified as a component in a Protection System.

How do I maintain a Special Protection System or relay sensing for Centralized UFLS or UVLS Systems?
Since components of the SPS, UFLS, or UVLS are the same types of components as those in Protection Systems then these components should be maintained like similar components used for other Protection System functions. In many cases the devices for SPS, UFLS and UVLS are also used for other protective functions. The same maintenance activities apply with the exception that distributed systems (UFLS and UVLS) have fewer dc supply and control circuitry maintenance activity requirements.
For the testing of the output action, verification may be by breaker tripping, but may be verified in overlapping segments. For example an SPS that trips a remote circuit breaker might be tested by testing the various parts of the scheme in overlapping segments. Another method is to document the real-time tripping of an SPS scheme should that occur. Forced trip tests of circuit breakers (etc) that are a part of distributed UFLS or UVLS schemes are not required.

The established maximum allowable intervals do not align well with the scheduled outages for my power plant. Can I extend the maintenance to the next scheduled outage following the established maximum interval?
No. You must complete your maintenance within the established maximum allowable intervals in order to be compliant. You will need to schedule your maintenance during available outages to complete your maintenance as required, even if it means that you may do protective relay maintenance more frequently than the maximum allowable intervals. The maintenance intervals were selected with typical plant outages, among other things, in mind.

If I am unable to complete the maintenance as required due to a major natural disaster (hurricane, earthquake, etc), how will this affect my compliance with this Standard.
The Sanction Guidelines of the North American Electric Reliability Corporation effective January 15, 2008 provides that the Compliance Monitor will consider extenuating circumstances when considering any sanctions.

What if my observed testing results show a high incidence of out-of-tolerance relays, or, even worse, I am experiencing numerous relay misoperations due to the relays being out-of-tolerance?
The established maximum time intervals are mandatory only as a not-to-exceed limitation. The establishment of a maximum is measurable. But, any entity can choose to test some or all of their Protection System components more frequently (or, to express it differently, exceed the

minimum requirements of the Standard). Particularly, if you find that the maximum intervals in the Standard do not achieve your expected level of performance, it is understandable that you would maintain the related equipment more frequently. A high incidence of relay Misoperations is in no one's best interest. The BES and an entity's bottom line both suffer.

We believe that the 3-month interval between inspections is unneccessary, why can we not perform these inspections twice per year?

The standard drafting team believes that routine monthly inspections are the norm. To align routine station inspections with other important inspections the 3-month interval was chosen. In lieu of station visits many activities can be accomplished with automated monitoring and alarming.

Our maintenance plan calls for us to perform routine protective relay tests every 3 years; if we are unable to achieve this schedule but we are able to complete the procedures in less than the Maximum Time Interval then are we in or out of compliance?

You are out of compliance. You must maintain your equipment to your stated intervals within your maintenance plan. The protective relays (and any Protection System component) cannot be tested at intervals that are longer than the maximum allowable interval stated in the Tables and yet you must conform to your own maintenance plan. Therefore you should design your maintenance plan such that it is not in conflict with the Minimum Activities and the Maximum Intervals. You then must maintain your equipment according to your maintenance plan. You will end up being compliant with both the Standard and your own plan.

Please provide a sample list of devices or systems that must be verified in a generator, generator step-up transformer, and generator connected station auxiliary transformer to meet the requirements of this Maintenance Standard.

Examples of typical devices and systems that may directly trip the generator, or trip through a lockout relay may include but are not necessarily limited to:

- Fault protective functions, including distance functions, voltage-restrained overcurrent functions, or voltage-controlled overcurrent functions
- Loss-of-field relays
- Volts-per-hertz relays
- Negative sequence overcurrent relays
- Over voltage and under voltage protection relays
- Stator-ground relays
- Communications-based Protection Systems such as transfer-trip systems
- Generator differential relays
- Reverse power relays
- Frequency relays
- Out-of-step relays

- Inadvertent energization protection
- Breaker failure protection

For generator step up or generator-connected station auxiliary transformers, operation of any of the following associated protective relays frequently would result in a trip of the generating unit and, as such, would be included in the program:

- Transformer differential relays
- Neutral overcurrent relay
- Phase overcurrent relays

Relays which trip breakers serving station auxiliary loads such as pumps, fans, or fuel handling equipment, etc., need not be included in the program even if the loss of the those loads could result in a trip of the generating unit. Furthermore, relays which provide protection to secondary unit substation (SUS) or low switchgear transformers and relays protecting other downstream plant electrical distribution system components are not included in the scope of this program even if a trip of these devices might eventually result in a trip of the generating unit. For example, a thermal overcurrent trip on the motor of a coal-conveyor belt could eventually lead to the tripping of the generator, but it does not cause the trip.

In the case where a plant does not have a generator connected station service transformer such that it is normally fed from a system connected station service transformer, is it still the drafting team's intent to exclude the protection systems for these system connected auxiliary transformers from scope even when the loss of the normal (system connected) station service transformer will result in a trip of a BES generating facility?

The SDT does not intend that the system-connected station auxiliary transformers be included in the Applicability. The generator-connected station service transformers are often connected to the generator bus directly without an interposing breaker; thus, the Protection Systems on these transformers will trip the generator as discussed in 4.2.5.1.

What is meant by "verify operation of the relay inputs and outputs that are essential to proper functioning of the Protection System?"

Any input or output (of the relay) that "affects the tripping" of the breaker is included in the scope of I/O of the relay to be verified. By "affects the tripping" one needs to realize that sometimes there are more Inputs and Outputs than simply the output to the trip coil. Many important protective functions include things like breaker fail initiation, zone timer initiation and sometimes even 52a/b contact inputs are needed for a protective relay to correctly operate.

Each input should be "picked up" or "turned on and off" and verified as changing state by the microprocessor of the relay. Each output should be "operated" or "closed and opened" from the microprocessor of the relay and the output should be verified to change state on the output terminals of the relay. One possible method of testing inputs of these relays is to "jumper" the needed dc voltage to the input and verify that the relay registered the change of state.

Electromechanical lock-out relays (86) and auxiliary tripping relays (94) (used to convey the tripping current to the trip coils) need to be electrically operated to prove the capability of the

device to change state. These tests need to be accomplished at least every 6 years, unless PBM methodology is applied.

The contacts on the 86 or 94 that change state to pass on the trip current to a breaker trip coil need only be checked every twelve years with the control circuitry.

Other devices in the control circuitry that are used for other protective functions besides tripping (including, but not limited to, electromechanical breaker fail initiation relays) need only be verified with the control circuitry every twelve years.

8.2 Retention of Records

PRC-005-1 describes a reporting or auditing cycle of one year and retention of records for three years. However, with a three year retention cycle, the records of verification for a Protection System might be discarded before the next verification, leaving no record of what was done if a Misoperation or failure is to be analyzed.

PRC-005-2 corrects this by requiring:

The Transmission Owner, Generator Owner, and Distribution Provider shall each retain documentation of the two most recent performances of each distinct maintenance activity for the Protection System components, or to the previous scheduled (on-site) audit date, whichever is longer.

This requirement assures that the documentation shows that the interval between maintenance cycles correctly meets the maintenance interval limits. The requirement is actually alerting the industry to documentation requirements already implemented by audit teams. Evidence of compliance bookending the interval shows interval accomplished instead of proving only your planned interval.

8.2.1 Frequently Asked Questions:

Please use a specific example to demonstrate the data retention requirements.
The data retention requirements are intended to allow the availability of maintenance records to demonstrate that the time intervals in your maintenance plan were upheld. For example: "Company A" has a maintenance plan that requires its electromechanical protective relays be tested, for routine scheduled tests, every 3 calendar years with a maximum allowed grace period of an additional 18 months. This entity would be required to maintain its records of maintenance of its last two routine scheduled tests. Thus its test records would have a latest routine test as well as its previous routine test. The interval between tests is therefore provable to an auditor as being within "Company A's" stated maximum time interval of 4.5 years.

The intent is not to require three test results proving two time intervals, but rather have two test results proving the last interval. The drafting team contends that this minimizes storage requirements while still having minimum data available to demonstrate compliance with time intervals.

Realistically, the Standard is providing advanced notice of audit team documentation requests; this type of information has already been requested by auditors.

If an entity prefers to utilize Performance Based Maintenance then statistical data may well be retained for extended periods to assist with future adjustments in time intervals.

If an equipment item is replaced then the entity can restart the maintenance-time-interval-clock if desired, however the replacement of equipment does not remove any documentation requirements that would have been required to verify compliance with time-interval requirements; in other words do not discard maintenance data that goes to verify your work.

The retention of documentation for new and/or replaced equipment is all about proving that the maintenance intervals had been in compliance. For example, a long range plan of upgrades might lead an entity to ignore required maintenance; retaining the evidence of prior maintenance that existed before any retirements and upgrades proves compliance with the Standard.

What does this Maintenance Standard say about commissioning? Is it necessary to have documentation in your maintenance history of the completion of commission testing?
This Standard does not establish requirements for commission testing. Commission testing includes all testing activities necessary to conclude that a facility has been built in accordance with design. While a thorough commission testing program would include, either directly or indirectly, the verification of all those Protection System attributes addressed by the maintenance activities specified in the Tables of PRC-005-2, verification of the adequacy of initial installation necessitates the performance of testing and inspections that go well beyond these routine maintenance activities. For example, commission testing might set baselines for future tests; perform acceptance tests and/or warranty tests; utilize testing methods that are not generally done routinely like staged-fault-tests.
However, many of the Protection System attributes which are verified during commission testing are not subject to age related or service related degradation and need not be re-verified within an ongoing maintenance program. Example – it is not necessary to re-verify correct terminal strip wiring on an ongoing basis.

PRC-005-2 assumes that thorough commission testing was performed prior to a Protection System being placed in service. PRC-005-2 requires performance of maintenance activities that are deemed necessary to detect and correct plausible age and service related degradation of components such that a properly built and commission tested Protection System will continue to function as designed over its service life.

It should be noted that commission testing frequently is performed by a different organization than that which is responsible for the ongoing maintenance of the Protection System. Furthermore, the commission testing activities will not necessarily correlate directly with the maintenance activities required by the Standard. As such, it is very likely that commission testing records will deviate significantly from maintenance records in both form and content and therefore, it is not necessary to maintain commission testing records within the maintenance program documentation.

Notwithstanding the differences in records, an entity would be wise to retain commissioning records to show a maintenance start date. (See below). An entity that requires that their commissioning tests have, at a minimum, the requirements of PRC-005-2 would help that entity prove time interval maximums by setting the initial time clock.

How do you determine the initial due date for maintenance?
The initial due date for maintenance should be based upon when a Protection System was tested. Alternatively, an entity may choose to use the date of completion of the commission testing of the Protection System component and the system was placed into service as the starting point in determining its first maintenance due dates. Whichever method is chosen, for newly installed Protection Systems the components should not be placed into service until minimum maintenance activities have taken place.
It is conceivable that there can be a (substantial) difference in time between the date of testing as compared to the date placed into service. The use of the "Calendar Year" language can help determine the next due date without too much concern about being non-compliant for missing test dates by a small amount (provided your dates are not already at the end of a year). However, if there is a substantial amount of time difference between testing and in-service dates then the testing date should be followed because it is the degradation of components that is the concern. While accuracy fluctuations may decrease when components are not energized there are cases when degradation can take place even though the device is not energized. Minimizing the time between commissioning tests and in-service dates will help.

If I miss two battery inspections four times out of 100 Protection System components on my transmission system, does that count as 2 percent or 8 percent when counting Violation Severity Level (VSL) for R3?
The entity failed to complete its scheduled program on two of its one hundred Protection System components which would equate to two percent for application to the VSL Table for Requirement R3.

How do I achieve a "grace period" without being out of compliance?
For the purposes of this example, concentrating on just unmonitored protective relays,– Table 1-1 specifies a maximum time interval (between the mandated maintenance activities) of 6 calendar years. Your plan must ensure that your unmonitored relays are tested at least once every 6 calendar years. You could, within your PSMP, require that your unmonitored relays be tested every 4 calendar years with a maximum allowable time extension of 18 calendar months. This allows an entity to have deadlines set for the auto-generation of work orders but still have the flexibility in scheduling complex work schedules. This also allows for that 18 calendar months to act as a buffer, a grace period, in the event of unforeseen events. You will note that this example of a maintenance plan interval has a planned time of 4 years; it also has a built-in time extension allowed within the PSMP and yet does not exceed the maximum time interval allowed by the Standard. So while there are no time extensions allowed beyond the Standard, an entity can still have substantial flexibility to maintain their Protection System components.

8.3 Basis for Table 1 Intervals

When developing the original *Protection System Maintenance – A Technical Reference* in 2007. the SPCTF collected all available data from Regional Entities (REs) on time intervals recommended for maintenance and test programs. The recommendations vary widely in categorization of relays, defined maintenance actions, and time intervals, precluding development of intervals by averaging. The SPCTF also reviewed the 2005 Report [2] of the

IEEE Power System Relaying Committee Working Group I-17 (Transmission Relay System Performance Comparison). Review of the I-17 report shows data from a small number of utilities, with no company identification or means of investigating the significance of particular results.

To develop a solid current base of practice, the SPCTF surveyed its members regarding their maintenance intervals for electromechanical and microprocessor relays, and asked the members to also provide definitively-known data for other entities. The survey represented 470 GW of peak load, or 64% of the NERC peak load. Maintenance interval averages were compiled by weighting reported intervals according to the size (based on peak load) of the reporting utility. Thus, the averages more accurately represent practices for the large populations of Protection Systems used across the NERC regions.

The results of this survey with weighted averaging indicate maintenance intervals of 5 years for electromechanical or solid state relays, and 7 years for unmonitored microprocessor relays.

A number of utilities have extended maintenance intervals for microprocessor relays beyond 7 years, based on favorable experience with the particular products they have installed. To provide a technical basis for such extension, the SPCTF authors developed a recommendation of 10 years using the Markov modeling approach from [1] as summarized in Section 8.4. The results of this modeling depend on the completeness of self-testing or monitoring. Accordingly, this extended interval is allowed by Table 1 only when such relays are monitored as specified in the attributes of monitoring contained in Tables 1-1 through 1-5 and Table 2. Monitoring is capable of reporting Protection System health issues that are likely to affect performance within the 10 year time interval between verifications.

It is important to note that, according to modeling results, Protection System availability barely changes as the maintenance interval is varied below the 10-year mark. Thus, reducing the maintenance interval does not improve Protection System availability. With the assumptions of the model regarding how maintenance is carried out, reducing the maintenance interval actually degrades Protection System availability.

8.4 Basis for Extended Maintenance Intervals for Microprocessor Relays

Table 1 allows maximum verification intervals that are extended based on monitoring level. The industry has experience with self-monitoring microprocessor relays that leads to the Table 1 value for a monitored relay as explained in Section 8.3. To develop a basis for the maximum interval for monitored relays in their *Protection System Maintenance – A Technical Reference*, the SPCTF used the methodology of Reference [1], which specifically addresses optimum routine maintenance intervals. The Markov modeling approach of [1] is judged to be valid for the design and typical failure modes of microprocessor relays.

The SPCTF authors ran test cases of the Markov model to calculate two key probability measures:

- Relay Unavailability - the probability that the relay is out of service due to failure or maintenance activity while the power system element to be protected is in service.

- Abnormal Unavailability - the probability that the relay is out of service due to failure or maintenance activity when a fault occurs, leading to failure to operate for the fault.

The parameter in the Markov model that defines self-monitoring capability is ST (for self test). ST = 0 if there is no self-monitoring; ST = 1 for full monitoring. Practical ST values are estimated to range from .75 to .95. The SPCTF simulation runs used constants in the Markov model that were the same as those used in [1] with the following exceptions:

Sn, Normal tripping operations per hour = 21600 (reciprocal of normal fault clearing time of 10 cycles)

Sb, Backup tripping operations per hour = 4320 (reciprocal of backup fault clearing time of 50 cycles)

Rc, Protected component repairs per hour = 0.125 (8 hours to restore the power system)

Rt, Relay routine tests per hour = 0.125 (8 hours to test a Protection System)

Rr, Relay repairs per hour = 0.08333 (12 hours to complete a Protection System repair after failure)

Experimental runs of the model showed low sensitivity of optimum maintenance interval to these parameter adjustments.

The resulting curves for Relay Unavailability and Abnormal Unavailability versus maintenance interval showed a broad minimum (optimum maintenance interval) in the vicinity of 10 years – the curve is flat, with no significant change in either unavailability value over the range of 9, 10, or 11 years. This was true even for a relay Mean Time between Failures (MTBF) of 50 years, much lower than MTBF values typically published for these relays. Also, the Markov modeling indicates that both the relay unavailability and abnormal unavailability actually become higher with more frequent testing. This shows that the time spent on these more frequent tests yields no failure discoveries that approach the negative impact of removing the relays from service and running the tests.

The PSMT SDT discussed the practical need for “time-interval extensions” or “grace periods” to allow for scheduling problems that resulted from any number of business contingencies. The time interval discussions also focused on the need to reflect industry norms surrounding Generator outage frequencies. Finally it was again noted that FERC Order 693 demanded maximum time intervals. “Maximum time intervals” by their very term negates any “time-interval extension” or “grace periods”. To recognize the need to follow industry norms on Generator outage frequencies and accommodate a form of time-interval extension while still following FERC Order 693 the Standard Drafting Team arrived at a 6 year interval for the electromechanical relay instead of the 5 year interval arrived at by the SPCTF. The PSMT SDT has followed the FERC directive for a *maximum* time interval and has determined that no extensions will be allowed. Six years has been set for the maximum time interval between manual maintenance activities. This maximum time interval also works well for maintenance cycles that have been in use in generator plants for decades.

For monitored relays, the PSMT SDT notes that the SPCTF called for 10 years as the interval between maintenance activities. This 10 year interval was chosen even though there was “…no significant change in unavailability value over the range of 9, 10, or 11 years. This was true

even for a relay Mean Time between Failures (MTBF) of 50 years…" The Standard Drafting Team again sought to align maintenance activities with known successful practices and outage schedules. The Standard does not allow extensions on any component of the Protection System; thus the maximum allowed interval for these components has been set to12 years. Twelve years also fits well into the traditional maintenance cycles of both substations and generator plants.

Also of note is the Table's use of the term "Calendar" in the column for "Maximum Maintenance Interval". The PSMT SDT deemed it necessary to include the term "Calendar" to facilitate annual maintenance planning, scheduling and implementation. This need is the result of known occurrences of system requirements that could cause maintenance schedules to be missed by a few days or weeks. The PSMT SDT chose the term "Calendar" to preclude the need to have schedules be met to the day. An electromechanical protective relay that is maintained in year #1 need not be revisited until 6 years later (year #7). For example: a relay was maintained April 10, 2008; maintenance would need to be completed no later than December 31, 2014.

Though not a requirement of this Standard, to stay in line with many Compliance Enforcement Agencies audit processes an entity should define, within their own PSMP, the entity's use of terms like annual, calendar year, etc. Then, once this is within the PSMP the entity should abide by their chosen language.

9. Performance-Based Maintenance Process

In lieu of using the Table 1 intervals, a Performance-Based Maintenance process may be used to establish maintenance intervals (*PRC-005 Attachment A Criteria for a Performance-Based Protection System Maintenance Program*). A Performance-Based Maintenance process may justify longer maintenance intervals, or require shorter intervals relative to Table 1. In order to use a Performance-Based Maintenance process, the documented maintenance program must include records of repairs, adjustments, and corrections to covered Protection Systems in order to provide historical justification for intervals other than those established in Table 1. Furthermore, the asset owner must regularly analyze these records of corrective actions to develop a ranking of causes. Recurrent problems are to be highlighted, and remedial action plans are to be documented to mitigate or eliminate recurrent problems.

Entities with Performance-Based Maintenance track performance of Protection Systems, demonstrate how they analyze findings of performance failures and aberrations, and implement continuous improvement actions. Since no maintenance program can ever guarantee that no malfunction can possibly occur, documentation of a Performance-Based Maintenance program would serve the utility well in explaining to regulators and the public a Misoperation leading to a major system outage event.

A Performance-Based Maintenance program requires auditing processes like those included in widely used industrial quality systems (such as ***ISO 9001-2000, Quality management systems***

— ***Requirements;*** or applicable parts of the NIST Baldridge National Quality Program). The audits periodically evaluate:

- The completeness of the documented maintenance process
- Organizational knowledge of and adherence to the process
- Performance metrics and documentation of results
- Remediation of issues
- Demonstration of continuous improvement.

In order to opt into a Performance-Based Maintenance (PBM) program the asset owner must first sort the various Protection System components into population segments. Any population segment must be comprised of at least 60 individual units; if any asset owner opts for PBM but does not own 60 units to comprise a population then that asset owner may combine data from other asset owners until the needed 60 units is aggregated. Each population segment must be composed of a grouping of Protection Systems or components of a consistent design standard or particular model or type from a single manufacturer and subjected to similar environmental factors. For example: One segment cannot be comprised of both GE & Westinghouse electro-mechanical lock-out relays; likewise, one segment cannot be comprised of 60 GE lock-out relays, 30 of which are in a dirty environment and the remaining 30 from a clean environment. This PBM process cannot be applied to batteries but can be applied to all other components of a Protection System including (but not limited to) specific battery chargers, instrument transformers, trip coils and/or control circuitry (etc.).

9.1 Minimum Sample Size

Large Sample Size

An assumption that needs to be made when choosing a sample size is "the sampling distribution of the sample mean can be approximated by a normal probability distribution." The Central Limit Theorem states: "In selecting simple random samples of size *n* from a population, the sampling distribution of the sample mean *x* can be approximated by a normal probability distribution as the sample size becomes large." (Essentials of Statistics for Business and Economics, Anderson, Sweeney, Williams, 2003)

To use the Central Limit Theorem in statistics, the population size should be large. The references below are supplied to help define what is large.

> "… whenever we are using a large simple random sample (rule of thumb: n>=30), the central limit theorem enables us to conclude that the sampling distribution of the sample mean can be approximated by a normal distribution." (Essentials of Statistics for Business and Economics, Anderson, Sweeney, Williams, 2003)

> "If samples of size n, when n>=30, are drawn from any population with a mean *u* and a standard deviation σ, the sampling distribution of sample means approximates a normal distribution. The greater the sample size, the better the approximation." (Elementary Statistics - Picturing the World, Larson, Farber, 2003)

> "The sample size is large (generally n>=30)… (Introduction to Statistics and Data Analysis - Second Edition, Peck, Olson, Devore, 2005)
>
> "… the normal is often used as an approximation to the *t* distribution in a test of a null hypothesis about the mean of a normally distributed population when the population variance is estimated from a relatively large sample. A sample size exceeding 30 is often given as a minimal size in this connection." (Statistical Analysis for Business Decisions, Peters, Summers, 1968)

Error of Distribution Formula

Beyond the large sample size discussion above, a sample size requirement can be estimated using the bound on the Error of Distribution Formula when the expected result is of a "Pass/Fail" format and will be between 0 and 1.0.

The Error of Distribution Formula is:

$$B = z\sqrt{\frac{\pi(1-\pi)}{n}}$$

Where:
B = bound on the error of distribution (allowable error)
z = standard error
π = expected failure rate
n = sample size required

Solving for n provides:

$$n = \pi(1-\pi)\left(\frac{z}{B}\right)^2$$

Minimum Population Size to use Performance-Based Program

One entity's population of components should be large enough to represent a sizeable sample of a vendor's overall population of manufactured devices. For this reason the following assumptions are made:

B = 5%
z = 1.96 (This equates to a 95% confidence level)
π = 4%

Using the equation above, n=59.0.

Minimum Sample Size to evaluate Performance-Based Program

The number of components that should be included in a sample size for evaluation of the appropriate testing interval can be smaller because a lower confidence level is acceptable since

the sample testing is repeated or updated annually. For this reason, the following assumptions are made:

B = 5%
z = 1.44 (85% confidence level)
π = 4%

Using the equation above, n=31.8.

Recommendation
Based on the above discussion, a sample size should be at least 30 to allow use of the equation mentioned. Using this and the results of the equation, the following numbers are recommended (and required within the Standard):

Minimum Population Size to use Performance-Based Maintenance Program = 60

Minimum Sample Size to evaluate Performance-Based Program = 30.

Once the population segment is defined then maintenance must begin within the intervals as outlined for the device described in the Tables 1-1 through 1-5. Time intervals can be lengthened provided the last year's worth of components tested (or the last 30 units maintained, whichever is more) had fewer than 4% countable events. It is notable that 4% is specifically chosen because an entity with a small population (60 units) would have to adjust its time intervals between maintenance if more than 1 countable event was found to have occurred during the last analysis period. A smaller percentage would require that entity to adjust the time interval between maintenance activities if even one unit is found out of tolerance or causes a Misoperation.

The minimum number of units that can be tested in any given year is 5% of the population. Note that this 5% threshold sets a practical limitation on total length of time between intervals at 20 years.

If at any time the number of countable events equals or exceeds 4% of the last year's tested components (or the last 30 units maintained, whichever is more) then the time period between manual maintenance activities must be decreased. There is a time limit on reaching the decreased time at which the countable events is less than 4%; this must be attained within three years.

This additional time period of three years to restore segment performance to <4% countable events is mandated to keep entities from "gaming the PBM system". It is believed that this requirement provides the economic disincentives to discourage asset owners from arbitrarily pushing the PBM time intervals out to up to 20 years without proper statistical data.

9.2 Frequently Asked Questions:

I'm a small entity and cannot aggregate a population of Protection System components to establish a segment required for a Performance-Based Protection System Maintenance Program. How can I utilize that opportunity?
Multiple asset owning entities may aggregate their individually owned populations of individual Protection System components to create a segment that crosses ownership boundaries. All entities participating in a joint program should have a single documented joint management process, with consistent Protection System Maintenance Programs (practices, maintenance intervals and criteria), for which the multiple owners are individually responsible with respect to the requirements of the Standard. The requirements established for Performance-Based Maintenance must be met for the overall aggregated program on an ongoing basis.

The aggregated population should reflect all factors that affect consistent performance across the population, including any relevant environmental factors such as geography, power-plant vs. substation, and weather conditions.

Can an owner go straight to a Performance-Based Maintenance program schedule, if they have previously gathered records?
Yes. An owner can go to a Performance-Based Maintenance program immediately. The owner will need to comply with the requirements of a Performance-Based Maintenance program as listed in the Standard. Gaps in the data collected will not be allowed; therefore, if an owner finds that a gap exists such that they cannot prove that they have collected the data as required for a Performance-Based Maintenance program then they will need to wait until they can prove compliance.

When establishing a Performance-Based Maintenance program, can I use test data from the device manufacturer, or industry survey results, as results to help establish a basis for my Performance-Based intervals?
No. You must use actual in-service test data for the components in the segment.

What types of misoperations or events are not considered countable events in the Performance-Based Protection System Maintenance (PBM) Program?
Countable events are intended to address conditions that are attributed to hardware failure or calibration failure; that is, conditions that reflect deteriorating performance of the component. These conditions include any condition where the device previously worked properly, then, due to changes within the device, malfunctioned or degraded to the point that re-calibration (to within the entity's tolerance) was required.
For this purpose of tracking hardware issues, human errors resulting in Protection System misoperations during system installation or maintenance activities are not considered countable events. Examples of excluded human errors include relay setting errors, design errors, wiring errors, inadvertent tripping of devices during testing or installation, and misapplication of Protection System components. Examples of misapplication of Protection System components include wrong CT or PT tap position, protective relay function misapplication, and components not specified correctly for their installation. Obviously, if one is setting up relevant data about hardware failures then human failures should be eliminated from the hardware performance analysis.

One example of human-error is not pertinent data might be in the area of testing "86" lock-out relays (LOR). "Entity A" has two types of LOR's type "X" and type "Y"; they want to move into a performance based maintenance interval. They have 1000 of each type, so the population variables are met. During electrical trip testing of all of their various schemes over the initial six-year interval they find zero type "X" failures, but human error led to tripping a BES element 100 times; they find 100 type "Y" failures and had an additional 100 human-error caused tripping incidents. In this example the human-error caused misoperations should not be used to judge the performance of either type of LOR. Analysis of the data might lead "Entity A" to change time intervals. Type "X" LOR can be placed into extended time interval testing because of its low failure rate (zero failures) while Type "Y" would have to be tested more often than every 6 calendar years (100 failures divided by 1000 units exceeds the 4% tolerance level).

Certain types of Protection System component errors that cause misoperations are not considered countable events. Examples of excluded component errors include device malfunctions that are correctable by firmware upgrades and design errors that do not impact protection function.

What are some examples of methods of correcting segment perfomance for Performance-Based Maintenance?

There are a number of methods that may be useful for correcting segment performance for mal-performing segments in a Performance-Based Maintenance system. Some examples are listed below.

- The maximum allowable interval, as established by the Performance-Based Maintenance system, can be decreased. This may, however, be slow to correct the performance of the segment.
- Identifiable sub-groups of components within the established segment, which have been identified to be the mal-performing portion of the segment, can be broken out as an independent segment for target action. Each resulting segment must satisfy the minimum population requirements for a Performance-Based Maintenance program in order to remain within the program.
- Targeted corrective actions can be taken to correct frequently occurring problems. An example would be replacement of capacitors within electromechanical distance relays if bad capacitors were determined to be the cause of the mal-performance.
- Components within the mal-performing segment can be replaced with other components (electromechanical distance relays with microprocessor relays, for example) to remove the mal-performing segment.

If I find (and correct) a maintenance-correctable issue as a result of a misoperation investigation (Re: PRC-004), how does this affect my Performance-Based Maintenance program?

If you perform maintenance on a Protection System component for any reason (including as part of a PRC-004 required misoperation investigation/corrective action), the actions performed can count as a maintenance activity, and, if you desire, "reset the clock" on everything you've done. In a Performance-Based Maintenance program, you also need to record the maintenance-correctable issue with the relevant component group and use it in the analysis to determine your

correct Performance-Based Maintenance interval for that component group. Note that "resetting the clock" should not be construed as interfering with an entity's routine testing schedule because the "clock-reset" would actually make for a decreased time interval by the time the next routine test schedule comes around.

For example a relay scheme, consisting of 4 relays, is tested on 1-1-11 and the PSMP has a time interval of 3 calendar years with an allowable extension of 1 calendar year. The relay would be due again for routine testing before the end of the year 2015. This mythical relay scheme has a misoperation on 6-1-12 that points to one of the four relays as bad. Investigation proves a bad relay and a new one is tested and installed in place of the original. This replacement relay actually could be retested before the end of the year 2016 (clock-reset) and not be out of compliance. This requires tracking maintenance by individual relays and is allowed. However, many companies schedule maintenance in other ways like by substation or by circuit breaker or by relay scheme. By these methods of tracking maintenance that "replaced relay" will be retested before the end of the year 2015. This is also acceptable. In no case was a particular relay tested beyond the PSMP of 4 years max, nor was the 6 year max of the Standard exceeded. The entity can reset the clock if they desire or the entity can continue with original schedules and, in effect, test even more frequently.

Why are batteries excluded from PBM? What about exclusion of batteries from condition based maintenance?

Batteries are the only element of a Protection System that is a perishable item with a shelf life. As a perishable item batteries require not only a constant float charge to maintain their freshness (charge), but periodic inspection to determine if there are problems associated with their aging process and testing to see if they are maintaining a charge or can still deliver their rated output as required.

Besides being perishable, a second unique feature of a battery that is unlike any other Protection System element is that a battery uses chemicals, metal alloys, plastics, welds, and bonds that must interact with each other to produce the constant dc source required for Protection Systems, undisturbed by ac system disturbances.

No type of battery manufactured today for Protection System application is free from problems that can only be detected over time by inspection and test. These problems can arise from variances in the manufacturing process, chemicals and alloys used in the construction of the individual cells, quality of welds and bonds to connect the components, the plastics used to make batteries and the cell forming process for the individual battery cells.

Other problems that require periodic inspection and testing can result from transportation from the factory to the job site, length of time before a charge is put on the battery, the method of installation, the voltage level and duration of equalize charges, the float voltage level used, and the environment that the battery is installed in.

All of the above mentioned factors and several more not discussed here are beyond the control of the Functional Entities that want to use a Performance-Based Protection System Maintenance (PBM) program. These inherent variances in the aging process of a battery cell make establishment of a designated segment based on manufacturer and type of battery impossible.

The whole point of PBM is that if all variables are isolated then common aging and performance criteria would be the same. However, there are too many variables in the electrochemical process to completely isolate all of the performance-changing criteria.

Similarly, Functional Entities that want to establish a condition-based maintenance program using the highest levels of monitoring, resulting in the least amount of hands-on maintenance activity, cannot completely eliminate some periodic maintenance of the battery used in a station dc supply. Inspection of the battery is required on a Maximum Maintenance Interval listed in the tables due to the aging processes of station batteries. However, higher degrees of monitoring of a battery can eliminate the requirement for some periodic testing and some inspections (see Table 1-4).

Please provide an example of the calculations involved in extending maintenance time intervals using PBM.

Entity has 1000 GE-HEA lock-out relays; this is greater than the minimum sample requirement of 60.

They start out testing all of the relays within the prescribed Table requirements (6 year max) by testing the relays every 5 years. The entity's plan is to test 200 units per year; this is greater than the minimum sample size requirement of 30.

For the sake of example only the following will show 6 failures per year, reality may well have different numbers of failures every year. PBM requires annual assessment of failures found per units tested.

After the first year of tests the entity finds 6 failures in the 200 units tested. 6/200= 3% failure rate.

This entity is now allowed to extend the maintenance interval if they choose.

The entity chooses to extend the maintenance interval of this population segment out to 10 years.

This represents a rate of 100 units tested per year; entity selects 100 units to be tested in the following year.

After that year of testing these 100 units the entity again finds 6 failed units. 6/100= 6% failures.

This entity has now exceeded the acceptable failure rate for these devices and must accelerate testing of all of the units at a higher rate such that the failure rate is found to be less than 4% per year; the entity has three years to get this failure rate down to 4% or less (per year).

In response to the 6% failure rate, the entity decreases the testing interval to 8 years. This means that they will now test 125 units per year (1000/8). The entity has just two years left to get the test rate corrected.

After a year they again find 6 failures out of the 125 units tested. 6/125= 5% failures.

In response to the 5% failure rate, the entity decreases the testing interval to 7 years. This means that they will now test 143 units per year (1000/7). The entity has just one year left to get the test rate corrected.

After a year they again find 6 failures out of the 143 units tested. 6/143= 4.2% failures.

(Note that the entity has tried 5 years and they were under the 4% limit and they tried 7 years and they were over the 4% limit. They must be back at 4% failures or less in the next year so they might simply elect to go back to 5 years.)

Instead, in response to the 5% failure rate, the entity decreases the testing interval to 6 years. This means that they will now test 167 units per year (1000/6).

After a year they again find 6 failures out of the 167 units tested. 6/167= 3.6% failures.

Entity found that they could maintain the failure rate at no more than 4% failures by maintaining the testing interval at 6 years or less. Entity chose 6 year interval and effectively extended their TBM (5 years) program by 20%.

A note of practicality is that an entity will probably be in better shape to lengthen the intervals between tests if the failure rate is less than 2%. But the requirements allow for annual adjustments if the entity desires. As a matter of maintenance management, an ever-changing test rate (units tested / year) may be un-workable.

Note that the “5% of components” requirement effectively sets a practical limit of 20 year maximum PBM interval. Also of note is the “3 years” requirement; this is there to prevent an entity from “gaming the system”. An entity might arbitrarily extend time intervals from 6 years to 20 years. In the event that an entity finds a failure rate greater than 4% then the test rate must be accelerated such that within three years the failure rate must be brought back down to 4% or less.

Here is a table that demonstrates the values discussed:

Year #	Total Population (P)	Test Interval (I)	Units to be Tested (U= P/I)	# of Failures Found (F)	Failure Rate (=F/U)	Decision to Change Interval Yes or No	Interval Chosen
1	1000	5 yrs	200	6	3%	Yes	10 yrs
2	1000	10 yrs	100	6	6%	Yes	8 yrs
3	1000	8 yrs	125	6	5%	Yes	7 yrs
4	1000	7 yrs	143	6	4.2%	Yes	6 yrs
5	1000	6 yrs	167	6	3.6%	No	6 yrs

Please provide an example of the calculations involved in extending maintenance time intervals using PBM for control circuitry.

Note that the following example captures "Control Circuitry" as all of the trip paths associated with a particular trip coil of a circuit breaker. An entity is not restricted to this method of counting control circuits. Perhaps another method an entity would prefer would be to simply track every individual (parallel) trip path. Or perhaps another method would be to track all of the trip outputs from a specific (set) of relays protecting a specific element. Under the included definition of "Component":

The designation of what constitutes a control circuit component is very dependent upon how an entity performs and tracks the testing of the control circuitry. Some entities test their control circuits on a breaker basis whereas others test their circuitry on a local zone of protection basis. Thus, entities are allowed the latitude to designate their own definitions of control circuit components. Another example of where the entity has some discretion on determining what constitutes a single component is the voltage and current sensing devices, where the entity may choose either to designate a full three-phase set of such devices or a single device as a single component.

And in Attachment A (PBM) the definition of Segment:

Segment – *Protection Systems or components of a consistent design standard, or a particular model or type from a single manufacturer that typically share other common elements. Consistent performance is expected across the entire population of a segment. A segment must contain at least sixty (60) individual components.*

Example:
Entity has 1000 circuit breakers, all of which have two trip coils for a total of 2000 trip coils; if all circuitry was designed and built with a consistent (internal entity) standard then this is greater than the minimum sample requirement of 60.
For the sake of further example the following facts are given:
Half of all relay panels (500) were built 40 years ago by an outside contractor, consisted of asbestos wrapped 600V-insulation panel wiring and the cables exiting the control house are THHN pulled in conduit direct to exactly half of all of the various circuit breakers. All of the relay panels and cable pulls were built with consistent standards and consistent performance standard expectations within the segment (which is greater than 60). Each relay panel has redundant microprocessor (MPC) relays (retrofitted); each MPC relay supplies an individual trip output to each of the two trip coils of the assigned circuit breaker.

Approximately 35 years ago the entity developed their own internal construction crew and now builds all of their own relay panels from parts supplied from vendors that meet the entity's specifications, including SIS 600V insulation wiring and copper-sheathed cabling within the direct conduits to circuit breakers. The construction crew uses consistent standards in the construction. This newer segment of their Control Circuitry population is different than the original segment, consistent (standards, construction and performance expectations) within the new segment and constitutes the remainder of the entity's population, (another 500 panels and the cabling to the remaining 500 circuit breakers). Each relay panel has redundant

microprocessor (MPC) relays; each MPC relay supplies an individual trip output to each of the two trip coils of the assigned circuit breaker. Every trip path in this newer segment has a device that monitors the voltage directly across the trip contacts of the MPC relays and alarms via RTU and SCADA to the Operations Control room. This monitoring device, when not in alarm, demonstrates continuity all the way through the trip coil, cabling and wiring back to the trip contacts of the MPC relay.

The entity is tracking 2000 trip coils (each consisting of multiple trip paths) in each of these two segments. But half of all of the trip paths are monitored, therefore the trip paths are continuously tested and the circuit will alarm when there is a failure; these alarms have to be verified every 12 years for correct operation.

The entity now has 1000 trip coils (and associated trip paths) remaining that they have elected to count as control circuits. The entity has instituted a process that requires the verification of every trip path to each trip coil (one unit), including the electrical activation of the trip coil. (The entity notes that the trip coils will have to be tripped electrically more often than the trip path verification and is taking care of this activity through other documentation of real-time fault operations.)

They start out testing all of the trip coil circuits within the prescribed Table requirements (12 year max) by testing the trip circuits every 10 years. The entity's plan is to test 100 units per year; this is greater than the minimum sample size requirement of 30.

For the sake of example only the following will show 3 failures per year, reality may well have different numbers of failures every year. PBM requires annual assessment of failures found per units tested.

After the first year of tests the entity finds 3 failures in the 100 units tested. 3/100= 3% failure rate.

This entity is now allowed to extend the maintenance interval if they choose.

The entity chooses to extend the maintenance interval of this population segment out to 20 years.

This represents a rate of 50 units tested per year; entity selects 50 units to be tested in the following year.

After that year of testing these 50 units the entity again finds 3 failed units. 3/50= 6% failures.

This entity has now exceeded the acceptable failure rate for these devices and must accelerate testing of all of the units at a higher rate such that the failure rate is found to be less than 4% per year; the entity has three years to get this failure rate down to 4% or less (per year).

In response to the 6% failure rate, the entity decreases the testing interval to 16 years. This means that they will now test 63 units per year (1000/16). The entity has just two years left to get the test rate corrected.

After a year they again find 3 failures out of the 63 units tested. 3/63= 4.76% failures.

In response to the >4% failure rate, the entity decreases the testing interval to 14 years. This means that they will now test 72 units per year (1000/14). The entity has just one year left to get the test rate corrected.

After a year they again find 3 failures out of the 72 units tested. 3/72= 4.2% failures.

(Note that the entity has tried 10 years and they were under the 4% limit and they tried 14 years and they were over the 4% limit. They must be back at 4% failures or less in the next year so they might simply elect to go back to 10 years.)

Instead, in response to the 4.2% failure rate, the entity decreases the testing interval to 12 years. This means that they will now test 84 units per year (1000/12).

After a year they again find 3 failures out of the 84 units tested. 3/84= 3.6% failures.

Entity found that they could maintain the failure rate at no more than 4% failures by maintaining the testing interval at 12 years or less. Entity chose 12 year interval and effectively extended their TBM (10 years) program by 20%.

A note of practicality is that an entity will probably be in better shape to lengthen the intervals between tests if the failure rate is less than 2%. But the requirements allow for annual adjustments if the entity desires. As a matter of maintenance management, an ever-changing test rate (units tested / year) may be un-workable.

Note that the “5% of components” requirement effectively sets a practical limit of 20 year maximum PBM interval. Also of note is the “3 years” requirement; this is there to prevent an entity from “gaming the system”. An entity might arbitrarily extend time intervals from 6 years to 20 years. In the event that an entity finds a failure rate greater than 4% then the test rate must be accelerated such that within three years the failure rate must be brought back down to 4% or less.

Here is a table that demonstrates the values discussed:

Year #	Total Population (P)	Test Interval (I)	Units to be Tested (U= P/I)	# of Failures Found (F)	Failure Rate (=F/U)	Decision to Change Interval Yes or No	Interval Chosen
1	1000	10 yrs	100	3	3%	Yes	20 yrs
2	1000	20 yrs	50	3	6%	Yes	16yrs
3	1000	16 yrs	63	3	4.8%	Yes	14 yrs
4	1000	14 yrs	72	3	4.2%	Yes	12 yrs
5	1000	12 yrs	84	3	3.6%	No	12 yrs

Please provide an example of the calculations involved in extending maintenance time intervals using PBM for voltage and current sensing devices.

Note that the following example captures "voltage and current inputs to the protective relays" as all of the various current transformer and potential transformer signals associated with a particular set of relays used for protection of a specific element. This entity calls this set of protective relays a "Relay Scheme". Thus this entity chooses to count PT and CT signals as a group instead of individually tracking maintenance activities to specific bushing CT's or specific PT's. An entity is not restricted to this method of counting voltage and current devices, signals and paths. Perhaps another method an entity would prefer would be to simply track every individual PT and CT. Note that a generation maintenance group may well select the latter because they may elect to perform routine off-line tests during generator outages whereas a transmission maintenance group might create a process that utilizes real-time system values measured at the relays. Under the included definition of "Component":

The designation of what constitutes a control circuit component is very dependent upon how an entity performs and tracks the testing of the control circuitry. Some entities test their control circuits on a breaker basis whereas others test their circuitry on a local zone of protection basis. Thus, entities are allowed the latitude to designate their own definitions of control circuit components. Another example of where the entity has some discretion on determining what constitutes a single component is the voltage and current sensing devices, where the entity may choose either to designate a full three-phase set of such devices or a single device as a single component.

And in Attachment A (PBM) the definition of Segment:

Segment – *Protection Systems or components of a consistent design standard, or a particular model or type from a single manufacturer that typically share other common elements. Consistent performance is expected across the entire population of a segment. A segment must contain at least sixty (60) individual components.*

Example:
Entity has 2000 "Relay Schemes", all of which have three current signals supplied from bushing CT's and three voltage signals supplied from substation bus PT's. All cabling and circuitry was designed and built with a consistent (internal entity) standard and this population is greater than the minimum sample requirement of 60.
For the sake of further example the following facts are given:
Half of all relay schemes (1000) are supplied with current signals from ANSI STD C800 bushing CT's and voltage signals from PT's built by ACME Electric MFR CO. All of the relay panels and cable pulls were built with consistent standards and consistent performance standard expectations exist for the consistent wiring, cabling and instrument transformers within the segment (which is greater than 60).

The other half of the entity's relay schemes have MPC relays with additional monitoring built-in that compare DNP values of voltages and currents (or Watts and VARs) as interpreted by the MPC relays and alarm for an entity-accepted tolerance level of accuracy. This newer segment of their "Voltage and Current Sensing" population is different than the original segment, consistent

(standards, construction and performance expectations) within the new segment and constitutes the remainder of the entity's population.

The entity is tracking many thousands of voltage and current signals within 2000 relay schemes (each consisting of multiple voltage and current signals) in each of these two segments. But half of all of the relay schemes voltage and current signals are monitored, therefore the voltage and current signals are continuously tested and the circuit will alarm when there is a failure; these alarms have to be verified every 12 years for correct operation.
The entity now has 1000 relay schemes worth of voltage and current signals remaining that they have elected to count within their relay schemes designation. The entity has instituted a process that requires the verification of these voltage and current signals within each relay scheme (one unit).
(Please note - a problem discovered with a current or voltage signal found at the relay could be caused by anything from the relay all the way to the signal source itself. Having many sources of problems can easily increase failure rates beyond the rate of failures of just one item (for example just PT's). It is the intent of the SDT to minimize failure rates of all of the equipment to an acceptable level thus any failure of any item that gets the signal from source to relay is counted. It is for this reason that the SDT chose to set the boundary at the ability of the signal to be delivered all the way to the relay.)

The entity will start out measuring all of the relay scheme voltage and currents at the individual relays within the prescribed Table requirements (12 year max) by measuring the voltage and current values every 10 years. The entity's plan is to test 100 units per year; this is greater than the minimum sample size requirement of 30.

For the sake of example only the following will show 3 failures per year, reality may well have different numbers of failures every year. PBM requires annual assessment of failures found per units tested.

After the first year of tests the entity finds 3 failures in the 100 units tested. 3/100= 3% failure rate.

This entity is now allowed to extend the maintenance interval if they choose.

The entity chooses to extend the maintenance interval of this population segment out to 20 years.

This represents a rate of 50 units tested per year; entity selects 50 units to be tested in the following year.

After that year of testing these 50 units the entity again finds 3 failed units. 3/50= 6% failures.

This entity has now exceeded the acceptable failure rate for these devices and must accelerate testing of all of the units at a higher rate such that the failure rate is found to be less than 4% per year; the entity has three years to get this failure rate down to 4% or less (per year).

In response to the 6% failure rate, the entity decreases the testing interval to 16 years. This means that they will now test 63 units per year (1000/16). The entity has just two years left to get the test rate corrected.

After a year they again find 3 failures out of the 63 units tested. 3/63= 4.76% failures.

In response to the >4% failure rate, the entity decreases the testing interval to 14 years. This means that they will now test 72 units per year (1000/14). The entity has just one year left to get the test rate corrected.

After a year they again find 3 failures out of the 72 units tested. 3/72= 4.2% failures.

(Note that the entity has tried 10 years and they were under the 4% limit and they tried 14 years and they were over the 4% limit. They must be back at 4% failures or less in the next year so they might simply elect to go back to 10 years.)

Instead, in response to the 4.2% failure rate, the entity decreases the testing interval to 12 years. This means that they will now test 84 units per year (1000/12).

After a year they again find 3 failures out of the 84 units tested. 3/84= 3.6% failures.

Entity found that they could maintain the failure rate at no more than 4% failures by maintaining the testing interval at 12 years or less. Entity chose 12 year interval and effectively extended their TBM (10 years) program by 20%.

A note of practicality is that an entity will probably be in better shape to lengthen the intervals between tests if the failure rate is less than 2%. But the requirements allow for annual adjustments if the entity desires. As a matter of maintenance management, an ever-changing test rate (units tested / year) may be un-workable.

Note that the “5% of components” requirement effectively sets a practical limit of 20 year maximum PBM interval. Also of note is the “3 years” requirement; this is there to prevent an entity from “gaming the system”. An entity might arbitrarily extend time intervals from 6 years to 20 years. In the event that an entity finds a failure rate greater than 4% then the test rate must be accelerated such that within three years the failure rate must be brought back down to 4% or less.

Here is a table that demonstrates the values discussed:

Year #	Total Population (P)	Test Interval (I)	Units to be Tested (U= P/I)	# of Failures Found (F)	Failure Rate (=F/U)	Decision to Change Interval Yes or No	Interval Chosen
1	1000	10 yrs	100	3	3%	Yes	20 yrs
2	1000	20 yrs	50	3	6%	Yes	16yrs
3	1000	16 yrs	63	3	4.8%	Yes	14 yrs
4	1000	14 yrs	72	3	4.2%	Yes	12 yrs
5	1000	12 yrs	84	3	3.6%	No	12 yrs

10. Overlapping the Verification of Sections of the Protection System

Tables 1-1 through 1-5 require that every Protection System component be periodically verified. One approach, but not the only method, is to test the entire protection scheme as a unit, from the secondary windings of voltage and current sources to breaker tripping. For practical ongoing verification, sections of the Protection System may be tested or monitored individually. The boundaries of the verified sections must overlap to ensure that there are no gaps in the verification. See Appendix A of this Supplementary Reference for additional discussion on this topic.

All of the methodologies expressed within this report may be combined by an entity, as appropriate, to establish and operate a maintenance program. For example, a Protection System may be divided into multiple overlapping sections with a different maintenance methodology for each section:

- Time-based maintenance with appropriate maximum verification intervals for categories of equipment as given in the Tables 1-1 through 1-5;
- Monitoring as described in Tables 1-1 through 1-5;
- A Performance-Based Maintenance program as described in Section 9 above or Attachment A of the Standard;
- Opportunistic verification using analysis of fault records as described in Section 11

10.1 Frequently Asked Question:

My system has alarms that are gathered once daily through an auto-polling system; this is not really a conventional SCADA system but does it meet the Table 1 requirements for inclusion as a monitored system?
Yes, provided the auto-polling that gathers the alarms reports those alarms to a location where the action can be initiated to correct the maintenance-correctable issue. This location does not have to be the location of the engineer or the technician that will eventually repair the problem, but rather a location where the action can be initiated.

11. Monitoring by Analysis of Fault Records

Many users of microprocessor relays retrieve fault event records and oscillographic records by data communications after a fault. They analyze the data closely if there has been an apparent misoperation, as NERC Standards require. Some advanced users have commissioned automatic fault record processing systems that gather and archive the data. They search for evidence of component failures or setting problems hidden behind an operation whose overall outcome seems to be correct. The relay data may be augmented with independently captured digital fault recorder (DFR) data retrieved for the same event.

Fault data analysis comprises a legitimate CBM program that is capable of reducing the need for a manual time-interval based check on Protection Systems whose operations are analyzed. Even electromechanical Protection Systems instrumented with DFR channels may achieve some CBM benefit. The completeness of the verification then depends on the number and variety of faults in the vicinity of the relay that produce relay response records, and the specific data captured.

A typical fault record will verify particular parts of certain Protection Systems in the vicinity of the fault. For a given Protection System installation, it may or may not be possible to gather within a reasonable amount of time an ensemble of internal and external fault records that completely verify the Protection System.

For example, fault records may verify that the particular relays that tripped are able to trip via the control circuit path that was specifically used to clear that fault. A relay or DFR record may

indicate correct operation of the protection communications channel. Furthermore, other nearby Protection Systems may verify that they restrain from tripping for a fault just outside their respective zones of protection. The ensemble of internal fault and nearby external fault event data can verify major portions of the Protection System, and reset the time clock for the Table 1 testing intervals for the verified components only.

What can be shown from the records of one operation is very specific and limited. In a panel with multiple relays, only the specific relay(s) whose operation can be observed without ambiguity should be used. Be careful about using fault response data to verify that settings or calibration are correct. Unless records have been captured for multiple faults close to either side of a setting boundary, setting or calibration could still be incorrect.
PMU data, much like DME data, can be utilized to prove various components of the Protection System. Obviously, care must be taken to attribute proof only to the parts of a Protection System that can actually be proven using the PMU or DME data.

If fault record data is used to show that portions or all of a Protection System have been verified to meet Table 1 requirements, the owner must retain the fault records used, and the maintenance related conclusions drawn from this data and used to defer Table 1 tests, for at least the retention time interval given in Section 8.2.

11.1 Frequently Asked Question:

I use my protective relays for fault and disturbance recording, collecting oscillographic records and event records via communications for fault analysis to meet NERC and DME requirements. What are the maintenance requirements for the relays?
For relays used only as disturbance monitoring equipment, the NERC Standard PRC-018-1 R3 & R6 states the maintenance requirements, and is being addressed by a Standards activity that is revising PRC-002-1 and PRC-018-1. For protective relays “that are designed to provide protection for the BES,” this Standard applies, even if they also perform DME functions.

12. Importance of Relay Settings in Maintenance Programs

In manual testing programs, many utilities depend on pickup value or zone boundary tests to show that the relays have correct settings and calibration. Microprocessor relays, by contrast, provide the means for continuously monitoring measurement accuracy. Furthermore, the relay digitizes inputs from one set of signals to perform all measurement functions in a single self-monitoring microprocessor system. These relays do not require testing or calibration of each setting.

However, incorrect settings may be a bigger risk with microprocessor relays than with older relays. Some microprocessor relays have hundreds or thousands of settings, many of which are critical to Protection System performance.

Monitoring does not check measuring element settings. Analysis of fault records may or may not reveal setting problems. To minimize risk of setting errors after commissioning, the user should enforce strict settings data base management, with reconfirmation (manual or automatic) that the installed settings are correct whenever maintenance activity might have changed them. For background and guidance, see [5] in References.

Table 1 requires that settings must be verified to be as specified. The reason for this requirement is simple. With legacy relays (non-microprocessor protective relays) it is necessary to know the value of the intended setting in order to test, adjust and calibrate the relay. Proving that the relay works per specified setting was the de facto procedure. However, with the advanced microprocessor relays it is possible to change relay settings for the purpose of verifying specific functions and then neglect to return the settings to the specified values. While there is no specific

requirement to maintain a settings management process there remains a need to verify that the settings left in the relay are the intended, specified settings. This need may manifest itself after any of the following:

- One or more settings are changed for any reason.
- A relay fails and is repaired or replaced with another unit.
- A relay is upgraded with a new firmware version.

12.1 Frequently Asked Questions:

How do I approach testing when I have to upgrade firmware of a microprocessor relay?
The entity should ensure that the relay continues to function properly after implementation of firmware changes. Some entities may have a R&D department that might routinely run acceptance tests on devices with firmware upgrades before allowing the upgrade to be installed. Other entities may rely upon the vigorous testing of the firmware OEM. An entity has the latitude to install devices and/or programming that they believe will perform to their satisfaction. If an entity should choose to perform the maintenance activities specified in the Tables following a firmware upgrade then they may, if they choose, reset the time clock on that set of maintenance activities so that they would not have to repeat the maintenance on its regularly scheduled cycle. (However, for simplicity in maintenance schedules, some entities may choose to not reset this time clock; it is merely a suggested option.)

If I upgrade my old relays then do I have to maintain my previous equipment maintenance documentation?
If an equipment item is repaired or replaced then the entity can restart the maintenance-activity-time-interval-clock if desired, however the replacement of equipment does not remove any documentation requirements. The requirements in the Standard are intended to ensure that an entity has a maintenance plan and that the entity adheres to minimum activities and maximum time intervals. The documentation requirements are intended to help an entity demonstrate compliance. For example, saving the dates and records of the last two maintenance activities is intended to demonstrate compliance with the interval. Therefore, if you upgrade or replace equipment then you still must maintain the documentation for the previous equipment, thus demonstrating compliance with the time interval requirement prior to the replacement action.

We have a number of installations where we have changed our Protection System components. Some of the changes were upgrades, but others were simply system rating changes that merely required taking relays "out-of-service". What are our responsibilities when it comes to "out-of-service" devices?
Assuming that your system up-rates, upgrades and overall changes meet any and all other requirements and standards then the requirements of PRC-005-2 are simple – if the Protection System component performs a Protection System function then it must be maintained. If the component no longer performs Protection System functions then it does not require maintenance activities under the Tables of PRC-005-2. While many entities might physically remove a component that is no longer needed there is no requirement in PRC-005-2 to remove such component(s). Obviously, prudence would

dictate that an "out-of-service" device is truly made inactive. There are no record requirements listed in PRC-005-2 for Protection System components not used.

While performing relay testing of a protective device on our Bulk Electric System it was discovered that the protective device being tested was either broken or out of calibration. Does this satisfy the relay testing requirement even though the protective device tested bad, and may be unable to be placed back into service?
Yes, PRC-005-2 requires entities to perform relay testing on protective devices on a given maintenance cycle interval. By performing this testing, the entity has satisfied PRC-005-2 requirement although the protective device may be unable to be returned to service under normal calibration adjustments. R3 states (the entity must):

R3. Each Transmission Owner, Generator Owner, and Distribution Provider shall implement and follow its PSMP and initiate resolution of any identified maintenance correctable issues.

Also, when a failure occurs in a Protection System, power system security may be comprised, and notification of the failure must be conducted in accordance with relevant NERC Standards.

If I show the protective device out of service while it is being repaired then can I add it back as a new protective device when it returns? If not, my relay testing history would show that I was out of compliance for the last maintenance cycle.
The maintenance and testing requirements (R3) (in essence) state "…shall implement and follow its PSMP and initiate resolution of any identified maintenance correctable issues..." The type of corrective activity is not stated; however it could include repairs or replacements.

Your documentation requirements will increase, of course, to demonstrate that your device tested bad and had corrective actions initiated. Your regional entity could very well ask for documentation showing status of your corrective actions.

13. Self-Monitoring Capabilities and Limitations

Microprocessor relay proponents have cited the self-monitoring capabilities of these products for nearly 20 years. Theoretically, any element that is monitored does not need a periodic manual test. A problem today is that the community of manufacturers and users has not created clear documentation of exactly what is and is not monitored. Some unmonitored but critical elements are buried in installed systems that are described as self-monitoring.

To utilize the extended time intervals allowed by monitoring the user must document that the monitoring attributes of the device match the minimum requirements listed in the Table 1.
Until users are able to document how all parts of a system which are required for the protective functions are monitored or verified (with help from manufacturers), they must continue with the unmonitored intervals established in Table 1.

Going forward, manufacturers and users can develop mappings of the monitoring within relays, and monitoring coverage by the relay of user circuits connected to the relay terminals.

To enable the use of the most extensive monitoring (and never again have a hands-on maintenance requirement), the manufacturers of the microprocessor-based self-monitoring components in the Protection System should publish for the user a document or map that shows:

- How all internal elements of the product are monitored for any failure that could impact Protection System performance.
- Which connected circuits are monitored by checks implemented within the product; how to connect and set the product to assure monitoring of these connected circuits; and what circuits or potential problems are not monitored.

With this information in hand, the user can document monitoring for some or all sections by:

- Presenting or referencing the product manufacturer's documents.
- Explaining in a system design document the mapping of how every component and circuit that is critical to protection is monitored by the microprocessor product(s) or by other design features.
- Extending the monitoring to include the alarm transmission facilities through which failures are reported within a given time frame to allocate where action can be taken to initiate resolution of the alarm attributed to a maintenance correctable issue, so that failures of monitoring or alarming systems also lead to alarms and action.
- Documenting the plans for verification of any unmonitored components according to the requirements of Table 1.

13.1 Frequently Asked Question:

I can't figure out how to demonstrate compliance with the requirements for the highest level of monitoring of Protection Systems. Why does this Maintenance Standard describe a maintenance program approach I cannot achieve?
Demonstrating compliance with the requirements for the highest level of monitoring any particular component of Protection Systems is likely to be very involved, and may include detailed manufacturer documentation of complete internal monitoring within a device, comprehensive design drawing reviews, and other detailed documentation. This Standard does not presume to specify what documentation must be developed; only that it must be documented.

There may actually be some equipment available that is capable of meeting these highest levels of monitoring criteria, in which case it may be maintained according to the highest level of monitoring shown on the Tables. However, even if there is no equipment available today that can meet this level of monitoring; the Standard establishes the necessary requirements for when such equipment becomes available.

By creating a roadmap for development, this provision makes the Standard technology-neutral. The Standard Drafting Team wants to avoid the need to revise the Standard in a few years to accommodate technology advances that may be coming to the industry.

14. Notification of Protection System Failures

When a failure occurs in a Protection System, power system security may be compromised, and notification of the failure must be conducted in accordance with relevant NERC Standard(s). Knowledge of the failure may impact the system operator's decisions on acceptable loading conditions.

This formal reporting of the failure and repair status to the system operator by the Protection System owner also encourages the system owner to execute repairs as rapidly as possible. In some cases, a microprocessor relay or carrier set can be replaced in hours; wiring termination failures may be repaired in a similar time frame. On the other hand, a component in an electromechanical or early-generation electronic relay may be difficult to find and may hold up repair for weeks. In some situations, the owner may have to resort to a temporary protection panel, or complete panel replacement.

15. Maintenance Activities

Some specific maintenance activities are a requirement to ensure reliability. An example would be that a BES entity could be prudent in its protective relay maintenance but if its battery maintenance program is lacking then reliability could still suffer. The NERC glossary outlines a Protection System as containing specific components. PRC-005-2 requires specific maintenance activities be accomplished within a specific time interval. As noted previously, higher technology equipment can contain integral monitoring capability that actually performs maintenance verification activities routinely and often; therefore *manual intervention* to perform certain activities on these type components may not be needed.

15.1 Protective Relays (Table 1-1)

These relays are defined as the devices that receive the input signal from the current and voltage sensing devices and are used to isolate a faulted element of the BES. Devices that sense thermal, vibration, seismic, pressure, gas or any other non-electrical inputs are excluded.

Non-microprocessor based equipment is treated differently than microprocessor based equipment in the following ways, the relays should meet the asset owners' tolerances.

- Non-microprocessor devices must be tested with voltage and/or current applied to the device.
- Microprocessor devices may be tested through the integral testing of the device.
    - There is no specific protective relay commissioning test or relay routine test mandated.
    - There is no specific documentation mandated.

15.1.1 Frequently Asked Question:

What calibration tolerance should be applied on electromechanical relays?
Each entity establishes their own acceptable tolerances when applying protective relaying on their system. For some Protection System components, adjustment is required to bring measurement accuracy within the parameters established by the asset owner based on the specific application of the component. A calibration failure is the result if testing finds the specified parameters to be out of tolerance.

15.2 Voltage & Current Sensing Devices (Table 1-3)

These are the current and voltage sensing devices, usually known as instrument transformers. There is presently a technology available (fiber-optic Hall-effect) that does not utilize conventional transformer technology; these devices and other technologies that produce quantities that represent the primary values of voltage and current are considered to be a type of voltage and current sensing devices included in this Standard.

The intent of the maintenance activity is to verify the input to the protective relay from the device that produces the current or voltage signal sample.

There is no specific test mandated for these components. The important thing about these signals is to know that the expected output from these components actually reaches the protective relay. Therefore, the proof of the proper operation of these components also demonstrates the integrity of the wiring (or other medium used to convey the signal) from the current and voltage sensing device all the way to the protective relay. The following observations apply.

- There is no specific ratio test, routine test or commissioning test mandated.
- There is no specific documentation mandated.
- It is required that the signal be present at the relay.
- This expectation can be arrived at from any of a number of means; by calculation, by comparison to other circuits, by commissioning tests, by thorough inspection, or by any means needed to verify the circuit meets the asset owner's Protection System maintenance program.
- An example of testing might be a saturation test of a CT with the test values applied at the relay panel; this therefore tests the CT as well as the wiring from the relay all the back to the CT.
- Another possible test is to measure the signal from the voltage and/or current sensing devices, during load conditions, at the input to the relay.
- Another example of testing the various voltage and/or current sensing devices is to query the microprocessor relay for the real-time loading; this can then be compared to other devices to verify the quantities applied to this relay. Since the input devices have supplied the proper values to the protective relay then the verification activity has been satisfied.

Thus event reports (and oscillographs) can be used to verify that the voltage and current sensing devices are performing satisfactorily.

- Still another method is to measure total watts and vars around the entire bus; this should add up to zero watts and zero vars thus proving the voltage and/or current sensing devices system throughout the bus.
- Another method for proving the voltage and/or current sensing devices is to complete commissioning tests on all of the transformers, cabling, fuses and wiring.
- Any other methods that provide documentation that the expected transformer values as applied to the inputs to the protective relays are acceptable.

15.2.1 Frequently Asked Questions:

What is meant by "…verify the current and voltage circuit inputs from the voltage and current sensing devices to the protective relays …" Do we need to perform ratio, polarity and saturation tests every few years?

No. You must verify that the protective relay is receiving the expected values from the voltage and current sensing devices (typically voltage and current transformers). This can be as difficult as is proposed by the question (with additional testing on the cabling and substation wiring to ensure that the values arrive at the relays); or simplicity can be achieved by other verification methods. While some examples follow, these are not intended to represent an all-inclusive list; technology advances and ingenuity should not be excluded from making comparisons and verifications:

- Compare the secondary values, at the relay, to a metering circuit, fed by different current transformers, monitoring the same line as the questioned relay circuit.

- Compare the individual phase secondary values at the relay panel (with additional testing on the panel wiring to ensure that the values arrive at those relays) with the other phases, and verify that residual currents are within expected bounds

- Observe all three phase currents and the residual current at the relay panel with an oscilloscope, observing comparable magnitudes and proper phase relationship, with additional testing on the panel wiring to ensure that the values arrive at the relays.

- Compare the values, as determined by the questioned relay (such as, but not limited to, a query to the microprocessor relay), to another protective relay monitoring the same line, with currents supplied by different CT's.

- Compare the secondary values, at the relay with values measured by test instruments (such as, but not limited to multi-meters, voltmeter, clamp-on ammeters, etc) and verified

by calculations and known ratios to be the values expected. For example a single PT on a 100KV bus will have a specific secondary value that when multiplied by the PT ratio arrives at the expected bus value of 100KV.

- Query SCADA for the power flows at the far end of the line protected by the questioned relay, compare those SCADA values to the values as determined by the questioned relay.

- Totalize the Watts and VARs on the bus and compare the totals to the values as seen by the questioned relay.

The point of the verification procedure is to ensure that all of the individual components are functioning properly; and that, an ongoing proactive procedure is in place to re-check the various components of the protective relay measuring systems.

Is wiring insulation or hi-pot testing required by this Maintenance Standard?
No, wiring insulation and equipment hi-pot testing are not specifically required by the Maintenance Standard. However, if the method of verifying CT and PT inputs to the relay involves some other method than actual observation of current and voltage transformer secondary inputs to the relay, it might be necessary to perform some sort of cable integrity test to verify that the instrument transformer secondary signals are actually making it to the relay and not being shunted off to ground. For instance, you could use CT excitation tests and PT turns ratio tests and compare to baseline values to verify that the instrument transformer outputs are acceptable. However, to conclude that these acceptable transformer instrument output signals are actually making it to the relay inputs, it also would be necessary to verify the insulation of the wiring between the instrument transformer and the relay.

My plant generator and transformer relays are electromechanical and do not have metering functions as do microprocessor based relays. In order for me to compare the instrument transformer inputs to these relays to the secondary values of other metered instrument transformers monitoring the same primary voltage and current signals, it would be necessary to temporarily connect test equipment like voltmeters and clamp on ammeters to measure the input signals to the relays. This practice seems very risky and a plant trip could result if the technician were to make an error while measuring these current and voltage signals. How can I avoid this risk? Also, what if no other instrument transformers are available which monitor the same primary voltage or current signal?
Comparing the input signals to the relays to the outputs of other independent instrument transformers monitoring the same primary current or voltage is just one method of verifying the instrument transformer inputs to the relays but is not required by the Standard. Plants can choose how to best manage their risk. If online testing is deemed too risky, offline tests such as, but not limited to, CT excitation test and PT turns ratio tests can be compared to baseline data and be used in conjunction with CT and PT secondary wiring insulation verification tests to adequately "verify the current and voltage circuit inputs from the voltage and current sensing devices to the protective relays …" while eliminating the risk of tripping an in service generator or transformer.

Similarly, this same offline test methodology can be used to verify the relay input voltage and current signals to relays when there are no other instrument transformers monitoring available for purposes of signal comparison.

15.3 Control circuitry associated with protective functions (Table 1-5)

This component of Protection Systems includes the trip coil(s) of the circuit breaker, circuit switcher or any other interrupting device. It includes the wiring from the batteries to the relays. It includes the wiring (or other signal conveyance) from every trip output to every trip coil. It includes any device needed for the correct processing of the needed trip signal to the trip coil of the interrupting device; this requirement is meant to capture inputs and outputs to and from a protective relay that are necessary for the correct operation of the protective functions. In short, every trip path must be verified; the method of verification is optional to the asset owner. An example of testing methods to accomplish this might be to verify, with a volt-meter, the existence of the proper voltage at the open contacts, the open circuited input circuit and at the trip coil(s). As every parallel trip path has similar failure modes, each trip path from relay to trip coil must be verified. Each trip coil must be tested to trip the circuit breaker (or other interrupting device) at least once. There is a requirement to operate the circuit breaker (or other interrupting device) at least once every six years as part of the complete functional test. If a suitable monitoring system is installed that verifies every parallel trip path then the manual-intervention testing of those parallel trip paths can be eliminated, however the actual operation of the circuit breaker must still occur at least once every six years. This 6-year tripping requirement can be completed as easily as tracking the real-time fault-clearing operations on the circuit breaker or tracking the trip coil(s) operation(s) during circuit breaker routine maintenance actions.

The circuit-interrupting device should not be confused with a motor-operated disconnect. The intent of this Standard is to require maintenance intervals and activities on Protection Systems equipment and not just all system isolating equipment.

It is necessary, however, to classify a device that actuates a high-speed auto-closing ground switch as an interrupting device if this ground switch is utilized in a Protection System and forces a ground fault to occur that then results in an expected Protection System operation to clear the forced ground fault. The SDT believes that this is essentially a transferred-tripping device without the use of communications equipment. If this high-speed ground switch is "…designed to provide protection for the BES…" then this device needs to be treated as any other Protection System component. The control circuitry would have to be tested within 12 years and any electromechanically operated device will have to be tested every 6 years. If the spring-operated ground switch can be disconnected from the solenoid triggering unit then the solenoid triggering unit can easily be tested without the actual closing of the ground blade.

Circuit breakers that participate in a UFLS or UVLS scheme are excluded from the tripping requirement, but not from the circuit test requirements; however the circuitry must be tested at least once every 12 years. There are many circuit interrupting devices in the distribution system that will be operating for any given under-frequency event that requires tripping for that event. A failure in the tripping-action of a single distributed system circuit breaker (or non-BES equipment interruption device) will be far less significant than, for example, any single

Transmission Protection System failure such as a failure of a bus differential lock-out relay. While many failures of these distributed system circuit breakers (or non-BES equipment interruption device) could add up to be significant, it is also believed that many circuit breakers are operated often on just fault clearing duty and therefore these circuit breakers are operated at least as frequently as any requirements that appear in this Standard.

The dc control circuitry also includes each auxiliary tripping relay (94) and each lock-out relay (86) that may exist in any particular trip scheme. If these devices are electromechanical components then they must be trip tested. The PSMT SDT considers these components to share some similarities in failure modes as electromechanical protective relays; as such there is a six year maximum interval between mandated maintenance tasks unless PBM is applied.

Contacts of the 86 or 94 that pass the trip current on to the circuit interrupting device trip coils will have to be checked as part of the 12 year requirement. Normally-open contacts that are not used to pass a trip signal and normally-closed contacts do not have to be verified. Verification of the tripping paths is the requirement.

New technology is also accommodated here; there are some tripping systems that have replaced the traditional hard-wired trip circuitry with other methods of trip-signal conveyance such as fiber-optics. It is the intent of the PSMT SDT to include this, and any other, technology that is used to convey a trip signal from a protective relay to a circuit breaker (or other interrupting device) within this category of equipment.

15.3.1 Frequently Asked Questions:

Is it permissible to verify circuit breaker tripping at a different time (and interval) than when we verify the protective relays and the instrument transformers?
Yes, provided the entire Protective System is tested within the individual components' maximum allowable testing intervals.

The Protection System Maintenance Standard describes requirements for verifying the tripping of circuit breakers. What is this telling me about maintenance of circuit breakers?
Requirements in PRC-005-2 are intended to verify the integrity of tripping circuits, including the breaker trip coil, as well as the presence of auxiliary supply (usually a battery) for energizing the trip coil if a protection function operates. Beyond this, PRC-005-2 sets no requirements for verifying circuit breaker performance, or for maintenance of the circuit breaker.

How do I test each dc Control Circuit path, as established in Table 1-5 "Protection System Control Circuitry (Trip coils and auxiliary relays)"?
Table 1-5 specifies that each breaker trip coil, auxiliary relay that carries trip current to a trip coil, and lockout relays that carry trip current to a trip coil must be operated within the specified time period. The required operations may be via targeted maintenance activities, or by documented operation of these devices for other purposes such as fault clearing.

Are high-speed ground switch trip coils included in the dc control circuitry?

Yes. PRC-005-2 includes high-speed grounding switch trip coils within the dc control circuitry to the degree that the initiating Protection Systems are characterized as "transmission Protection Systems."

Does the control circuitry and trip coil of a non-BES breaker, tripped via a BES protection component, have to be tested per Table 1.5?
An example of an otherwise non-BES circuit breaker that is tripped via a BES protection component might be (but is not limited to) a 12.5KV circuit breaker feeding (non-black-start) radial loads but has a trip that originates from an under-frequency (81) relay.
The relay must be verified.
The voltage signal to the relay must be verified.
All of the relevant dc supply tests still apply.
The unmonitored trip circuit must be verified every 12 years.
The trip coil of the circuit breaker does not have to be individually proven with an electrical trip.

15.4 Batteries and DC Supplies (Table 1-4)

IEEE guidelines were consulted to arrive at the maintenance activities for batteries. The following guidelines were used: IEEE 450 (for Vented Lead-Acid batteries), IEEE 1188 (for Valve-Regulated Lead-Acid batteries) and IEEE 1106 (for Nickel-Cadmium batteries).

The currently proposed NERC definition of a Protection System is

- Protective relays which respond to electrical quantities,
- Communications systems necessary for correct operation of protective functions,
- Voltage and current sensing devices providing inputs to protective relays,
- Station dc supply associated with protective functions (including station batteries, battery chargers, and non-battery-based dc supply), and
- Control circuitry associated with protective functions through the trip coil(s) of the circuit breakers or other interrupting devices."
- The station battery is not the only component that provides dc power to a Protection System. In the new definition for Protection System "station batteries" are replaced with "station dc supply" to make the battery charger and dc producing stored energy devices (that are not a battery) part of the Protection System that must be maintained.

The PSMT SDT recognizes that there are several technological advances in equipment and testing procedures that allow the owner to choose how to verify that a battery string is free of open circuits. The term "continuity" was introduced into the Standard to allow the owner to choose how to verify continuity of a battery set by various methods, and not to limit the owner to the two methods recommended in the IEEE standards. Continuity as used in Table 1-4 of the Standard refers to verifying that there is a continuous current path from the positive terminal of the station battery set to the negative terminal. Without verifying continuity of a station battery, there is no way to determine that the station battery is available to supply dc power to the station.

An open battery string will be an unavailable power source in the event of loss of the battery charger.

Batteries cannot be a unique population segment of a Performance-Based Maintenance Program (PBM) because there are too many variables in the electrochemical process to completely isolate all of the performance-changing criteria necessary for using PBM on battery systems. However, nothing precludes the use of a PBM process for any other part of a dc supply besides the batteries themselves.

15.4.1 Frequently Asked Questions:

What constitutes the station dc supply as mentioned in the definition of Protective System?
The previous definition of Protection System includes batteries, but leaves out chargers. The latest definition includes chargers as well as dc systems that do not utilize batteries. This revision of PRC-005-2 is intended to capture these devices that were not included under the previous definition. The station direct current (dc) supply normally consists of two components: the battery charger and the station battery itself. There are also emerging technologies that provide a source of dc supply that does not include either a battery or charger.

Battery Charger - The battery charger is supplied by an available ac source. At a minimum, the battery charger must be sized to charge the battery (after discharge) and supply the constant dc load. In many cases, it may be sized also to provide sufficient dc current to handle the higher energy requirements of tripping breakers and switches when actuated by the protective relays in the Protection System.

Station Battery - Station batteries provide the dc power required for tripping and for supplying normal dc power to the station in the event of loss of the battery charger. There are several technologies of battery that require unique forms of maintenance as established in Table 1-4.

Emerging Technologies - Station dc supplies are currently being developed that use other energy storage technologies beside the station battery to prevent loss of the station dc supply when ac power is lost. Maintenance of these station dc supplies will require different kinds of tests and inspections. Table 1-4 presents maintenance activities and maximum allowable testing intervals for these new station dc supply technologies. However, because these technologies are relatively new the maintenance activities for these station dc supplies may change over time.

What did the PSMT SDT mean by “continuity” of the dc supply?
The PSMT SDT recognizes that there are several technological advances in equipment and testing procedures that allow the owner to choose how to verify that a battery string is free of open circuits. The term “continuity” was introduced into the Standard to allow the owner to choose how to verify continuity of a battery set by various methods, and not to limit the owner to the two methods recommended in the IEEE standards. Continuity as used in Table 1-4 of the Standard refers to verifying that there is a continuous current path from the positive terminal of the station battery set to the negative terminal. Without verifying continuity of a station battery, there is no way to determine that the station battery is available to supply dc power to the station.

An open battery string will be an unavailable power source in the event of loss of the battery charger.

The current path through a station battery from its positive to its negative connection to the dc control circuits is composed of two types of elements. These path elements are the electrochemical path through each of its cells and all of the internal and external metallic connections and terminations of the batteries in the battery set. If there is loss of continuity (an open circuit) in any part of the electrochemical or metallic path the battery set will not be available for service. In the event of the loss of the ac source or battery charger, the battery must be capable of supplying dc current, both for continuous dc loads and for tripping breakers and switches. Without continuity, the battery cannot perform this function.
At generating stations and large transmission stations where battery chargers are capable of handling the maximum current required by the Protection System, there are still problems that could potentially occur when the continuity through the connected battery is interrupted.

- Many battery chargers produce harmonics which can cause failure of dc power supplies in microprocessor based protective relays and other electronic devices connected to station dc supply. In these cases, the substation battery serves as a filter for these harmonics. With the loss of continuity in the battery, the filter provided by the battery is no longer present.

- Loss of electrical continuity of the station battery will cause, regardless of the battery charger's output current capability, a delayed response in full output current from the charger. Almost all chargers have an intentional 1 to 2 second delay to switch from a low substation dc load current to the maximum output of the charger. This delay would cause the opening of circuit breakers to be delayed which could violate system performance standards.

Monitoring of the station dc supply voltage will not indicate that there is a problem with the dc current path through the battery unless the battery charger is taken out of service. At that time a break in the continuity of the station battery current path will be revealed because there will be no voltage on the station dc circuitry. This particular test method, while proving battery continuity, may not be acceptable to all installations.

Although the Standard prescribes what must be accomplished during the maintenance activity it does not prescribe how the maintenance activity should be accomplished. There are several methods that can be used to verify the electrical continuity of the battery. These are not the only possible methods, simply a sampling of some methods:

- One method is to measure that there is current flowing through the battery itself by a simple clamp on milliamp-range ammeter. A battery is always either charging or discharging. Even when a battery is charged there is still a measurable float charge current that can be detected to verify that there is continuity in the electrical path through the battery.

- A simple test for continuity is to remove the battery charger from service and verify that the battery provides voltage and current to the dc system. However, the behavior of the

various dc-supplied equipment in the station should be considered before using this approach.

- Manufacturers of microprocessor controlled battery chargers have developed methods for their equipment to periodically (or continuously) test for battery continuity For example, one manufacturer periodically reduces the float voltage on the battery until current from the battery to the dc load can be measured to confirm continuity.

- Applying test current (as in some ohmic testing devices, or devices for locating dc grounds) will provide a current that when measured elsewhere in the string, will prove that the circuit is continuous.

- Internal ohmic measurements of the cells and units of Lead Acid Batteries (VRLA & VLA) can detect lack of continuity within the cells of a battery string and when used in conjunction with resistance measurements of the battery's external connections can prove continuity. Also some methods of taking internal ohmic measurements by their very nature can prove the continuity of a battery string without having to use the results of resistance measurements of the external connections.

- Specific Gravity tests can infer continuity because without continuity there could be no charging occurring and if there is no charging then Specific Gravity will go down below acceptable levels.

No matter how the electrical continuity of a battery set is verified it is a necessary maintenance activity that must be performed at the intervals prescribed by Table 1-4 to insure that the station dc supply has a path that can provide the required current to the Protection System at all times.

When should I check the station batteries to see if they have sufficient energy to perform as designed?

The answer to this question depends on the type of battery (Valve-Regulated Lead-Acid, Vented Lead-Acid, or Nickel-Cadmium), and the maintenance activity chosen.

For example, if you have a Valve-Regulated Lead-Acid (VRLA) station battery, and you have chosen to evaluate the measured cell/unit internal ohmic values to the battery cell's baseline, you will have to perform verification at a maximum maintenance interval of no greater than every six months. While this interval might seem to be quite short, keep in mind that the 6 month interval is consistent with IEEE guidelines for VRLA batteries; this interval provides an accumulation of data that better shows when a VRLA battery is no longer capable of its design capacity.

If, for a VRLA station battery, you choose to conduct a performance capacity test on the entire station battery as the maintenance activity, then you will have to perform verification at a maximum maintenance interval of no greater than every 3 calendar years.

How is a baseline established for cell/unit internal ohmic measurements?

Establishment of cell/unit internal ohmic baseline measurements should be completed when lead acid batteries are newly installed. To ensure that the baseline ohmic cell/unit values are most indicative of the station batteries ability to perform as designed they should be made upon

installation of the station battery and the completion of a performance test of the battery's capacity.

When internal ohmic measurements are taken, consistent test equipment should be used to establish the baseline and used for the future trending of the cells internal ohmic measurements because of variances in test equipment and the type of ohmic measurement used by different manufacturer's equipment. Keep in mind that one manufacturer's "Conductance" test equipment does not produce similar results as another manufacturer's "Impedance" test equipment even though both manufacturers have produced "Ohmic" test equipment.

For all new installations of Valve-Regulated Lead-Acid (VRLA) batteries and Vented Lead-Acid (VLA) batteries, where trending of the cells internal ohmic measurements to a baseline are to be used to determine the ability of the station battery to perform as designed, the establishment of the baseline as described above should be followed at the time of installation to insure the most accurate trending of the cell/unit. However, often for older VRLA batteries the owners of the station batteries have not established a baseline at installation. Also for owners of VLA batteries who want to establish a maintenance activity which requires trending of measured ohmic values to a baseline, there was typically no baseline established at installation of the station battery to trend to.

To resolve the problem of the unavailability of baseline internal ohmic measurements for the individual cell/unit of a station battery, many manufacturers of internal ohmic measurement devices have established libraries of baseline values for VRLA and VLA batteries using their testing device. Also several of the battery manufacturers have libraries of baselines for their products that can be used to trend to. However it is important that when using battery manufacturer supplied data that it is verified that the baseline readings to be used were taken with the same ohmic testing device that will be used for future measurements (for example "Conductance Readings" from one manufacturer's test equipment do not correlate to "Impedance Readings" from a different manufacturer's test equipment).

Although many manufacturers may have provided base line values which will allow trending of the internal ohmic measurements over the remaining life of a station battery, these baselines are not the actual cell/unit measurements for the battery being trended. It is important to have a baseline tailored to the station battery to more accurately use the tool of ohmic measurement trending. That more customized baseline can only be created by following the establishment of a baseline for each cell/unit at the time of installation of the station battery.

Why determine the State of Charge?

Even though there is no present requirement to check the state of charge of a battery, it can be a very useful tool in determining the overall condition of a battery system. The following discussions are offered as a general reference.

When a battery is fully charged the battery is available to deliver its existing capacity. As a battery is discharged its ability to deliver its maximum available capacity is diminished. It is necessary to determine if the state of charge has dropped to an unacceptable level.

IEEE Standards 450, 1188, and 1106 for Vented Lead-Acid (VLA), Valve-Regulated Lead-Acid (VRLA), and Nickel-Cadmium (NiCd) batteries respectively discuss state of charge in great

detail in their standards or annexes to their standards. The above IEEE standards are excellent sources for describing how to determine state of charge of the battery system.

What is State of Charge and how can it be determined in a station battery?
The state of charge of a battery refers to the ratio of residual capacity at a given instant to the maximum capacity available from the battery. When a battery is fully charged the battery is available to deliver its existing capacity. As a battery is discharged its ability to deliver its maximum available capacity is diminished. Knowing the amount of energy left in a battery compared with the energy it had when it was fully charged gives the user an indication of how much longer a battery will continue to perform before it needs recharging.

For Vented Lead-Acid (VLA) batteries which use accessible liquid electrolyte, a hydrometer can be used to test the specific gravity of each cell as a measure of its state of charge. The hydrometer depends on measuring changes in the weight of the active chemicals. As the battery discharges the active electrolyte, sulphuric acid, is consumed and the concentration of the sulphuric acid in water is reduced. This in turn reduces the specific gravity of the solution in direct proportion to the state of charge. The actual specific gravity of the electrolyte can therefore be used as an indication of the state of charge of the battery. Hydrometer readings may not tell the whole story, as it takes a while for the acid to get mixed up in the cells of a VLA battery. If measured right after charging, you might see high specific gravity readings at the top of the cell, even though it is much less at the bottom. Conversely if taken shortly after adding water to the cell the specific gravity readings near the top of the cell will be lower than those at the bottom.

Nickel-Cadmium batteries, where the specific gravity of the electrolyte does not change during battery charge and discharge, and Valve-Regulated Lead-Acid (VRLA) batteries, where the electrolyte is not accessible, cannot have their state of charge determined by specific gravity readings. For these two types of batteries and also for VLA batteries, where another method besides taking hydrometer readings is desired, the state of charge may be determined by using the battery charger and taking voltage and current readings during float and equalize (high-rate charge mode). This method is an effective means of determining when the state of charge is low and when it is approaching a fully charged condition which gives the assurance that the available battery capacity will be maximized.

Why determine the Connection Resistance?
High connection resistance can cause abnormal voltage drop or excessive heating during discharge of a station battery. During periods of a high rate of discharge of the station battery a very high resistance can cause severe damage. The maintenance requirement to verify battery terminal connection resistance in Table 1-4 is established to verify that the integrity of all battery electrical connections is acceptable. This verification includes cell-to-cell (intercell) and external circuit terminations.

Adequacy of the electrical terminations can be determined by comparing resistance measurements for all connections taken at the time of station battery's installation to the same resistance measurements taken at the maintenance interval chosen not to exceed the maximum

maintenance interval of Table 1-4. Trending of the interval measurements to the baseline measurements will identify any degradation in the battery connections. When the connection resistance values exceed the acceptance criteria for the connection, the connection is typically disassembled, cleaned, reassembled and measurements taken to verify that the measurements are adequate when compared to the baseline readings.

IEEE Standard 450 for Vented Lead-Acid (VLA) batteries "informative" annex F, and IEEE Standard 1188 for Valve-Regulated Lead-Acid (VRLA) batteries "informative" annex D provide excellent information and examples on performing connection resistance measurements using a microohmmeter and connection detail resistance measurements. Although this information is contained in standards for lead acid batteries the information contained is applicable to Nickel-Cadmium batteries also.

What conditions should be inspected for visible battery cells?
The maintenance requirement to inspect the cell condition of all station battery cells where the cells are visible is a maintenance requirement of Table 1-4. Station batteries are different from any other component in the Protection Station because they are a perishable product due to the electrochemical process which is used to produce dc electrical current and voltage. This inspection is a detailed visual inspection of the cells for abnormalities that occur in the aging process of the cell. In VLA battery visual inspections, some of the things that the inspector is typically looking for on the plates are signs of sulfation of the plates, abnormal color (possible copper contamination) and abnormal conditions such as cracked grids. The visual inspection could look for symptoms of hydration that would indicate that the battery has been left in a completely discharged state for a prolonged period. Besides looking at the plates for signs of aging, all internal connections such as the bus bar connection to each plate and the connections to all posts of the battery need to be visually inspected for abnormalities. In a complete visual inspection for the condition of the cell the cell plates, separators and sediment space of each cell must be looked at for signs of deterioration. An inspection of the station battery's cell condition also includes looking at all terminal posts and cell-to-cell electric connections to ensure they are corrosion free. The case of the battery containing the cell or cells must be inspected for cracks and electrolyte leaks through cracks and the post seals.

This maintenance activity cannot be extended beyond the maximum maintenance interval of Table 1-4 by a Performance-Based Maintenance Program (PBM) because of the electrochemical aging process of the station battery nor can there be any monitoring associated with it because there must be a visual inspection involved in the activity. A remote visual inspection could possibly be done, but its interval must be no greater than the maximum maintenance interval of Table 1-4.

Why consider the ability of the station battery to perform as designed?
Determining the ability of a station battery to perform as designed is critical in the process of determining when the station battery must be replaced or when an individual cell or battery unit must be removed or replaced. For lead acid batteries the ability to perform as designed can be determined in more than one manner.

The two acceptable methods for proving that a station lead acid battery can perform as designed are based on two different philosophies. The first maintenance activity requires tests and evaluation of the internal ohmic measurements on each of the individual cells/units of the station battery to determine that each component can perform as designed and therefore the entire station battery can be verified to perform as designed. The second activity requires a capacity discharge test of the entire station battery to verify that degradation of one or several components (cells) in the station battery has not deteriorated to a point where the total capacity of the station battery system falls below its designed rating.

The first maintenance activity listed in Table 1-4 for verifying that a station battery can perform as designed uses maximum maintenance intervals for evaluating internal ohmic measurements in relation to their baseline measurements that are based on industry experience, EPRI technical reports and application guides, and the IEEE battery standards. By evaluating the internal ohmic measurements for each cell and comparing that measurement to the cell's baseline ohmic measurement low-capacity cells can be identified and eliminated or the whole station battery replaced to keep the station battery capable of performing as designed. Since the philosophy behind internal ohmic measurement evaluation is based on the fact that each battery component must be verified to be able to perform as designed, the interval for verification by this maintenance activity must be shorter to catch individual cell/unit degradation.

It should be noted that even if a lead acid battery unit is composed of multiple cells where the ohmic measurement of each cell cannot be taken, the ohmic test can still be accomplished. The data produced becomes trending data on the multi-cell unit instead of trending individual cells. Care must be taken in the evaluation of the ohmic measures of entire units to detect a bad cell that has a poor ohmic value. Good ohmic values of other cells in the same battery unit can make it harder to detect the poor ohmic measurement of a bad cell because the only ohmic measurement available is of all the cells in the battery unit.

This first maintenance activity is applicable only for Vented Lead-Acid (VLA) and Valve-Regulated Lead-Acid (VRLA) batteries; this trending activity has not shown to be effective for NiCd batteries thus the only choices for owners of NiCd batteries are the performance tests of the second activity (see applicable IEEE guideline for specifics on performance tests).

The second maintenance activity listed in Table 1-4 for verifying that a station battery can perform as designed uses maximum maintenance intervals for capacity testing that were designed to align with the IEEE battery standards. This maintenance activity is applicable for Vented Lead-Acid, Valve-Regulated Lead-Acid, and Nickel-Cadmium batteries.
The maximum maintenance interval for discharge capacity testing is longer than the interval for testing and evaluation of internal ohmic cell measurements. An individual component of a station battery may degrade to an unacceptable level without causing the total station battery to fall below its designed rating under capacity testing.

IEEE Standards 450, 1188, and 1106 for vented lead-acid (VLA), Valve-Regulated Lead-Acid (VRLA), and Nickel-Cadmium (NiCd) batteries respectively (which together are the most commonly used substation batteries on the BES) go into great detail about capacity testing of the

entire battery set to determine that a battery can perform as designed or needs to be replaced soon.

Why in Table 1-4 of PRC-005-2 is there a maintenance activity to inspect the structural intergrity of the battery rack?
The three IEEE standards (1188, 450, and 1106) for VRLA, Vented Lead-Acid, and Nickel-Cadmium batteries all recommend that as part of any battery inspection the battery rack should be inspected. The purpose of this inspection is to verify that the battery rack is correctly installed and has no deterioration that could weaken its structural integrity.
Because the battery rack is specifically designed for the battery that is mounted on it, weakening of its structural members by rust or corrosion can physically jeopardize the battery.

What is required to comply with the "Unintentional dc Grounds" requirement?
In most cases, the first ground that appears on a battery is not a problem. It is the unintentional ground that appears on the opposite pole that becomes problematic. Even then many systems are designed to operate favorably under some unintentional DC ground situations. It is up to the owner of the Protection System to determine if corrective actions are needed on detected unintentional DC grounds. The Standard merely requires that a check be made for the existence of Unintentional DC Grounds. Obviously a "check-off" of some sort will have to be devised by the inspecting entity to document that a check is routinely done for Unintentional DC Grounds because of the possible consequences to the Protection System.

Where the Standard refers to "all cells" is it sufficient to have a documentation method that refers to "all cells" or do we need to have separate documentation for every cell? For example do I need 60 individual documented check-offs for good electrolyte level or would a single check-off per bank be sufficient?
A single check-off per battery bank is sufficient for documentation, as long as the single check-off attests to checking all cells/units.

Does this Standard refer to Station batteries or all batteries, for example Communications Site Batteries?
This Standard refers to Station Batteries. The drafting team does not believe that the scope of this Standard refers to communications sites. The batteries covered under PRC-005-2 are the batteries that supply the trip current to the trip coils of the interrupting devices that are a part of the Protection System. The SDT believes that a loss of power to the communications systems at a remote site would cause the communications systems associated with protective relays to alarm at the substation. At this point the corrective actions can be initiated.

My VRLA batteries have multiple-cells within an individual battery jar (or unit); how am I expected to comply with the cell-to-cell ohmic measurement requirements on these units that I cannot get to?
Measurement of cell/unit (not all batteries allow access to "individual cells" some "units" or jars may have multiple cells within a jar) internal ohmic values of all types of lead acid batteries where the cells of the battery are not visible is a station dc supply maintenance activity in Table 1-4.

What are cell/unit internal ohmic measurements?
With the introduction of Valve-Regulated Lead-Acid (VRLA) batteries to station dc supplies in the 1980's several of the standard maintenance tools that are used on Vented Lead-Acid (VLA) batteries were unable to be used on this new type of lead-acid battery to determine its state of health. The only tools that were available to give indication of the health of these new VRLA batteries were voltage readings of the total battery voltage, the voltage of the individual cells and periodic discharge tests.

In the search for a tool for determining the health of a VRLA battery several manufacturers studied the electrical model of a lead acid battery's current path through its cell. The overall battery current path consists of resistance and inductive and capacitive reactance. The inductive reactance in the current path through the battery is so minuscule when compared to the huge capacitive reactance of the cells that it is often ignored in most circuit models of the battery cell. Taking the basic model of a battery cell manufacturers of battery test equipment have developed and marketed testing devices to take measurements of the current path to detect degradation in the internal path through the cell.

In the battery industry these various types of measurements are referred to as ohmic measurements. Terms used by the industry to describe ohmic measurements are ac conductance, ac impedance, and dc resistance. They are defined by the test equipment providers and IEEE and refer to the method of taking ohmic measurements of a lead acid battery. For example in one manufacturer's ac conductance equipment measurements are taken by applying a voltage of a known frequency and amplitude across a cell or battery unit and observing the ac current flow it produces in response to the voltage. A manufacturer of an ac impedance meter measures ac current of a known frequency and amplitude that is passed through the whole battery string and determines the impedances of each cell or unit by measuring the resultant ac voltage drop across them. On the other hand dc resistance of a cell is measured by a third manfacturer's equipment by applying a dc load across the cell or unit and measuring the step change in both the voltage and current to calculate the internal dc resistance of the cell or unit.

It is important to note that because of the rapid development of the market for ohmic measurement devices there were no standards developed or used to mandate the test signals used in making ohmic measurements. Manufacturers using proprietary methods and applying different frequencies and magnitudes for their signals have developed a diversity of measurement devices. This diversity in test signals coupled with the three different types of ohmic measurements techniques (impedance conductance and resistance) make it impossible to get the same ohmic measurement for a cell with different ohmic measurement devices. However, IEEE has recognized the great value for choosing one device for ohmic measurement, no matter who makes it or the method to calculate the ohmic measurement. The only caution given by IEEE and the battery manufacturers is that when trending the cells of a lead acid station battery consistent ohmic measurement devices should be used to establish the baseline measurement and to trend the battery set for its entire life.

For VRLA batteries both IEEE Standard 1188 (Maintenance, Testing and Replacement of VRLA Batteries) and IEEE Standard 1187 (Installation Design and Installation of VRLA Batteries) recognize the importance of the maintenance activity of establishing a baseline for "cell/unit

internal ohmic measurements (impedance, conductance and resistance)" and trending them at frequent intervals over the life of the battery. There are extensive discussions about the need for taking these measurements in these standards. IEEE Standard 1188 requires taking internal ohmic values as described in Annex C4 during regular inspections of the station battery. For VRLA batteries IEEE Standard 1188 in talking about the necessity of establishing a base line and trending it over time says, "depending on the degree of change a performance test, cell replacement or other corrective action may be necessary.

For VLA batteries IEEE Standard 484 (Installation of VLA batteries) gives several guidelines about establishing baseline measurements on newly installed lead acid stationary batteries. The standard also discusses the need to look for significant changes in the ohmic measurements, the caution that measurement data will differ with each type of model of instrument used, and lists a number of factors that affect ohmic measurements.

At the beginning of the 21st century EPRI conducted a series of extensive studies to determine the relationship of internal ohmic measurements to the capacity of a lead acid battery cell. The studies indicated that internal ohmic measurements were in fact a good indicator of a lead acid battery cell's capacity but because users often were only interested in the total station battery capacity and the technology does not precisely predict overall battery capacity, if a user only needs "an accurate measure of the overall battery capacity" they should "perform a battery capacity test."

Prior to the EPRI studies some large and small companies which owned and maintained station dc supplies in NERC Protection Systems developed maintenance programs where trending of ohmic measurements of cells/units of the station's battery became the maintenance activity for determining if the station battery could perform as designed. By evaluation of the trending of the ohmic measurements over time the owner could track the performance of the individual components of the station battery and determine if a total station battery or components of it required capacity testing, removal, replacement or in many instances replacement of the entire station battery. By taking this approach these owners have eliminated having to perform capacity testing at prescribed intervals to determine if a battery needs to be replaced and are still able to effectively determine if a station battery can perform as designed.

Why verify voltage?

There are two required maintenance activities associated with verification of dc voltages in Table 1-4. These two required activities are to verify station dc supply voltage and float voltage of the battery charger, and have different maximum maintenance intervals. Both of these voltage verification requirements relate directly to the battery charger maintenance.

The verification of the dc supply voltage is simply an observation of battery voltage to prove that the charger has not been lost or is not malfunctioning. Low battery voltage below float voltage indicates that the battery may be on discharge and if not corrected the station battery could discharge down to some extremely low value that will not operate the Protection System. High voltage, close to or above the maximum allowable dc voltage for equipment connected to the

station dc supply indicates the battery charger may be malfunctioning by producing high dc voltage levels on the Protection System. If corrective actions are not taken to bring the high voltage down, the dc power supplies and other electronic devices connected to the station dc supply may be damaged. The maintenance activity of verifying the float voltage of the battery charger is not to prove that a charger is lost or producing high voltages on the station dc supply, but rather to prove that the charger is properly floating the battery within the proper voltage limits.

Why check for the electrolyte level?

In Vented Lead-Acid (VLA) and Nickel-Cadmium (NiCd) batteries the visible electrolyte level must be checked as one of the required maintenance activities that must be performed at an interval that is equal to or less than the maximum maintenance interval of Table 1-4. Because the electrolyte level in Valve-Regulated Lead-Acid (VRLA) batteries cannot be observed there is no maintenance activity listed in Table 1-4 of the Standard for checking the electrolyte level. Low electrolyte level of any cell of a VLA or NiCd station battery is a condition requiring correction. Typically the electrolyte level should be returned to an acceptable level for both types of batteries (VLA and NiCd) by adding distilled or other approved-quality water to the cell.

Often people confuse the interval for watering all cells required due to evaporation of the electrolyte in the station battery cells with the maximum maintenance interval required to check the electrolyte level. In many of the modern station batteries the jar containing the electrolyte is so large with the band between the high and low electrolyte level so wide that normal evaporation which would require periodic watering of all cells takes several years to occur. However, because loss of electrolyte due to cracks in the jar, overcharging of the station battery or other unforeseen events can cause rapid loss of electrolyte the shorter maximum maintenance intervals for checking the electrolyte level are required. A low level of electrolyte in a VLA battery cell which exposes the tops of the plates can cause the exposed portion of the plates to accelerated sulfation resulting in loss of cell capacity. Also, in a VLA battery where the electrolyte level goes below the end of the cell withdrawal tube or filling funnel, gasses can exit the cell by the tube instead of the flame arrester and present an explosion hazard.

Why does it appear that there are two maintenance activities in Table 1-4(b) (for VRLA batteries) that appear to be the same activity and have the same maximum maintenance interval?

There are two different and distinct reasons for doing almost the same maintenance activity at the same interval for Valve-Regulated Lead-Acid (VRLA) batteries. The first similar activity for VRLA batteries (Table 1-4(b)) that has the same maximum maintenance interval is to “measure battery cell/unit internal ohmic values.” Part of the reason for this activity is because the visual inspection of the cell condition is unavailable for VRLA batteries. Besides the requirement to measure the internal ohmic measurements of VRLA batteries to determine the internal health of the cell, the maximum maintenance interval for this activity is significantly shorter than the interval for Vented Lead-Acid (VLA) due to some unique failure modes for VRLA batteries. Some of the potential problems that VRLA batteries are susceptible to that do not affect VLA batteries are thermal runaway, cell dry-out, and cell reversal when one cell has a very low capacity.

The other similar activity listed in Table 1-4(b) is “verify that the station battery can perform as designed by evaluating the measured cell/unit internal ohmic values to station battery baseline.” This activity allows an owner the option to choose between this activity with its much shorter maximum maintenance interval or the longer maximum maintenance interval for the maintenance activity to “Verify that the station battery can perform as designed by conducting a performance, service, or modified performance capacity test of the entire battery bank.”

For VRLA batteries, there are two drivers for internal ohmic readings. The first driver is for a means to trend battery life. A comparison and trending against the baseline new battery ohmic reading can be used in lieu of capacity tests to determine remaining battery life. Remaining battery life is analogous to stating that the battery is still able to "perform as designed". This is the intent of the “capacity 6 month test” at Row 4 on Table 1-4b.

The second big driver is VRLA batteries tendency for thermal runaway. This is the intent of the “thermal runaway test” at Row 2 on Table 1-4b. In order to detect a cell in thermal runaway, you need not have a formal trending program to track when a cell has reached a 25% increase over baseline. Rather it will stick out like a sore thumb when compared to the other cells in a string at a given point in time regardless of the age of all the cells in a string. In other words, if the battery is 10 years old and all the cells are gradually approaching a 25% increase in ohmic values over baseline, then you have a battery which is approaching end of life. You need to get ready to buy a new battery but you do not have to worry about an impending catastrophic failure. On the other hand, if the battery is five years old and you have one cell that has a markedly different ohmic reading than all the other cells, then you need to be worried that this cell is in thermal runaway and catastrophic failure is imminent.

If an entity elects to use a capacity test rather than a cell ohmic value trending program, this does not eliminate the need to be concerned about thermal runaway – the entity still needs to do the 6 month readings and look for cells which are outliers in the string but they need not trend results against the factory/as new baseline. Some entities will not mind the extra administrative burden of having the ongoing trending program against baseline - others would rather just do the capacity test and not have to trend the data against baseline. Nonetheless, all entities must look for ohmic outliers on a 6 month basis.

It is possible to accomplish both tasks listed (trend testing for capacity and testing for thermal runaway candidates) with the very same ohmic test. It becomes an analysis exercise of watching the trend from baselines and watching for the oblique cell measurement.

15.5 Associated communications equipment (Table 1-2)

The equipment used for tripping in a communications assisted trip scheme is a vital piece of the trip circuit. Remote action causing a local trip can be thought of as another parallel trip path to the trip coil that must be tested.

Besides the trip output and wiring to the trip coil(s) there is also a communications medium that must be maintained.
Newer technologies now exist that achieve communications-assisted tripping without the conventional wiring practices of older technology.

For example: older technologies may have included *Frequency Shift Key* methods. This technology requires that guard and trip levels be maintained.

The actual tripping path(s) to the trip coil(s) may be tested as a parallel trip path within the dc control circuitry tests.

Emerging technologies transfer digital information over a variety of carrier mediums that are then interpreted locally as trip signals.

The requirements apply to the communicated signal needed for the proper operation of the protective relay trip logic or scheme. Therefore this Standard is applied to equipment used to convey both trip signals (permissive or direct) and block signals.

It was the intent of this Standard to require that a test be performed on any communications-assisted trip scheme regardless of the vintage of technology.The essential element is that the tripping (or blocking) occurs locally when the remote action has been asserted; or that the tripping (or blocking) occurs remotely when the local action is asserted. Note that the required testing can still be done within the concept of testing by overlapping segments. Associated communications equipment can be (but is not limited to) testing at other times and different frequencies as the protective relays, the individual trip paths and the affected circuit interrupting devices.

Some newer installations utilize digital signals over fiber-optics from the protective relays in the control house to the circuit interrupting device in the yard. This method of tripping the circuit breaker, even though it might be considered communications, must be maintained per the dc control circuitry maintenance requirements.

15.5.1 Frequently Asked Questions:

What are some examples of mechanisms to check communications equipment functioning?
For unmonitored Protection Systems, various types of communications systems will have different facilities for on-site integrity checking to be performed at least every three months during a substation visit. Some examples are, but not limited to:

- On-off power-line carrier systems can be checked by performing a manual carrier keying test between the line terminals, or carrier check-back test from one terminal.
- Systems which use frequency-shift communications with a continuous guard signal (over a telephone circuit, analog microwave system, etc.) can be checked by observing for a loss-of-guard indication or alarm. For frequency-shift power-line carrier systems, the guard signal level meter can also be checked.
- Hard-wired pilot wire line Protection Systems typically have pilot-wire monitoring relays that give an alarm indication for a pilot wire ground or open pilot wire circuit loop.
- Digital communications systems typically have a data reception indicator or data error indicator (based on loss of signal, bit error rate, or frame error checking).

For monitored Protection Systems, various types of communications systems will have different facilities for monitoring the presence of the communications channel, and activating alarms that can be monitored remotely. Some examples are, but not limited to:

- On-off power-line carrier systems can be shown to be operational by automated periodic power-line carrier check-back tests, with remote alarming of failures.
- Systems which use a frequency-shift communications with a continuous guard signal (over a telephone circuit, analog microwave system, etc.) can be remotely monitored with a loss-of-guard alarm or low signal level alarm.
- Hard-wired pilot wire line Protection Systems can be monitored by remote alarming of pilot-wire monitoring relays.
- Digital communications systems can activate remotely monitored alarms for data reception loss or data error indications.
- Systems can be queried for the data error rates.

For the highest degree of monitoring of Protection Systems, the communications system must monitor all aspects of the performance and quality of the channel that show it meets the design performance criteria, including monitoring of the channel interface to protective relays.

- In many communications systems signal quality measurements including signal-to-noise ratio, received signal level, reflected transmitter power or standing wave ratio, propagation delay, and data error rates are compared to alarm limits. These alarms are connected for remote monitoring.
- Alarms for inadequate performance are remotely monitored at all times, and the alarm communications system to the remote monitoring site must itself be continuously monitored to assure that the actual alarm status at the communications equipment location is continuously being reflected at the remote monitoring site.

What is needed for the 3-month inspection of communications-assisted trip scheme equipment?

The 3-month inspection applies to unmonitored equipment. An example of compliance with this requirement might be, but is not limited to:

With each site visit, check that the equipment is free from alarms, check any metered signal levels, and that power is still applied. While this might be explicit for a particular type of equipment (i.e. FSK equipment), the concept should be that the entity verify that the communications equipment that is used in a Protection System is operable through a cursory inspection and site visit. This site visit can be eliminated on this particular example if the FSK equipment had a monitored alarm on Loss of Guard. Blocking carrier systems with auto checkbacks will present an alarm when the channel fails allowing a visual indication. With no auto checkback, the channel integrity will need to be verified by a manual checkback or a two ended signal check. This check could also be eliminated by bring the auto checkback failure alarm to the monitored central location.

Does a fiber optic I/O scheme used for breaker tripping or control within a station, for example - transmitting a trip signal or control logic between the control house and the breaker control cabinet, constitute a communications system?

This equipment is presently classified as being part of the Protection System Control Circuitry and tested per the portions of Table 1 applicable to Protection System Control Circuitry rather than those portions of the table applicable to communications equipment.

In Table 1-2, the Maintenance Activities section of the Protective System Communications Equipment and Channels refers to the quality of the channel meeting "performance criteria". What is meant by performance criteria?
Protection System communications channels must have a means of determining if the channel and communications equipment is operating normally. If the channel is not operating normally an alarm will be indicated. For unmonitored systems this alarm will probably be on the panel. For monitored systems, the alarm will be transmitted to a remote location.

Each entity will have established a nominal performance level for each protective system communications channel that is consistent with proper functioning of the Protection System. If that level of nominal performance is not being met, the system will go into alarm. Following are some examples of protective system communications channel performance measuring:

- For direct transfer trip using a frequency shift power line carrier channel, a guard level monitor is part of the equipment. A normal receive level is established when the system is calibrated and if the signal level drops below an established level, the system will indicate an alarm.
- An on-off blocking signal over power line carrier is used for directional comparison blocking schemes on transmission lines. During a fault, block logic is sent to the remote relays by turning on a local transmitter and sending the signal over the power line to a receiver at the remote end. This signal is normally off so continuous levels cannot be checked. These schemes use check-back testing to determine channel performance. A predetermined signal sequence is sent to the remote end and the remote end decodes this signal and sends a signal sequence back. If the sending end receives the correct information from the remote terminal, the test passes and no alarm is indicated. Full power and reduced power tests are typically run. Power levels for these tests are determined at the time of calibration.
- Pilot wire relay systems use a hardwire communications circuit to communicate between the local and remote ends of the protective zone. This circuit is monitored by circulating a dc current between the relay systems. A typical level may be 1 mA. If the level drops below the setting of the alarm monitor, the system will indicate an alarm.
- Modern digital relay systems use data communications to transmit relay information to the remote end relays. An example of this is a line current differential scheme commonly used on transmission lines. The protective relays communicate current magnitude and phase information over the communications path to determine if the fault is located in the protective zone. Quantities such as digital packet loss, bit error rate and channel delay are monitored to determine the quality of the channel. These limits are determined and

set during relay commissioning. Once set, any channel quality problems that fall outside the set levels will indicate an alarm.

The previous examples show how some protective relay communications channels can be monitored and how the channel performance can be compared to performance criteria established by the entity. This Standard does not state what the performance criteria will be; it just requires that the entity establish nominal criteria so protective system channel monitoring can be performed.

How is the performance criteria of Protection System communications equipment involved in the maintenance program?
An entity determines the acceptable performance criteria depending on the technology implemented. If the communications channel performance of a Protection System varies from the pre-determined performance criteria for that system then these results should be investigated and resolved.

How do I verify the A/D converters of microprocessor-based relays?
There are a variety of ways to do this. Two examples would be: using values gathered via data communications and automatically comparing these values with values from other sources, or using groupings of other measurements (such as vector summation of bus feeder currents) for comparison. Many other methods are possible.

15.6 Alarms (Table 2)

In addition to the tables of maintenance for the components of a Protection System, there is an additional table added for alarms. This additional table was added for clarity. This enabled the common alarm attributes to be consolidated into a single spot and thus make it easier to read the Tables 1-1 through 1-5. The alarms need to arrive at a site wherein a corrective action can be initiated. This could be a control room, operations center, etc. The alarming mechanism can be a Standard alarming system or an auto-polling system, the only requirement is that the alarm be brought to the action-site within 24 hours. This effectively makes manned-stations equivalent to monitored stations. The alarm of a monitored point (for example a monitored trip path with a lamp) in a manned-station now makes that monitored point eligible for monitored status. Obviously, these same rules apply to a non-manned-station, which is that if the monitored point has an alarm that is auto-reported to the operations center (for example) within 24 hours then it too is considered monitored.

15.6.1 Frequently Asked Question:

Why are there activities defined for varying degrees of monitoring a Protection System component when that level of technology may not yet be available?
There may already be some equipment available that is capable of meeting the highest levels of monitoring criteria listed in the Tables. However, even if there is no equipment available today that can meet this level of monitoring the Standard establishes the necessary requirements for when such equipment becomes available. By creating a roadmap for development, this provision makes the Standard technology-neutral. The Standard Drafting Team wants to avoid the need to

revise the Standard in a few years to accommodate technology advances that may be coming to the industry.

Does a fail-safe "form b" contact that is alarmed to a 24/7 operation center classify as an alarm path with monitoring?
If the fail-safe "form-b" contact that is alarmed to a 24/7 operation center causes the alarm to activate for failure of any portion of the alarming path from the alarm origin to the 24/7 operations center then this can be classified as an alarm path with monitoring.

15.7 Examples of Evidence of Compliance

To comply with the requirements of this Standard an entity will have to document and save evidence. The evidence can be of many different forms. The Standard Drafting Team recognizes that there are concurrent evidence requirements of other NERC Standards that could, at times, fulfill evidence requirements of this Standard.

15.7.1 Frequently Asked Questions:

What forms of evidence are acceptable?

Acceptable forms of evidence, as relevant for the Requirement being documented, include but are not limited to:

- Process documents or plans
- Data (such as relay settings sheets, photos, SCADA, and test records)
- Database lists, records and/or screen shots that demonstrate compliance information
- Prints, diagrams and/or schematics
- Maintenance records
- Logs (operator, substation, and other types of log)
- Inspection forms
- Mail, memos, or email proving the required information was exchanged, coordinated, submitted or received
- Check-off forms (paper or electronic)
- Any record that demonstrates that the maintenance activity was known, accounted for, and/or performed.

If I replace a failed Protection System component with another component, what testing do I need to perform on the new component?
In order to reset the Table 1 maintenance interval for the replacement component, all relevant Table 1 activities for the component should be performed.

I have evidence to show compliance for PRC-016 ("Special Protection System Misoperation"). Can I also use it to show compliance for this Standard, PRC-005-2?
Maintaining evidence for operation of Special Protection Systems could concurrently be utilized as proof of the operation of the associated trip coil (provided one can be certain of the trip coil involved). Thus the reporting requirements that one may have to do for the Misoperation of a Special Protection Scheme under PRC-016 could work for the activity tracking requirements under this PRC-005-2.

I maintain disturbance records which show Protection System operations. Can I use these records to show compliance?
These records can be concurrently utilized as dc trip path verifications to the degree that they demonstrate the proper function of that dc trip path.

I maintain test reports on some of my components of my Protection System components. Can I use these test reports to show that I have verified a maintenance activity?
Yes.

16. References

1. Protection System Maintenance: A Technical Reference. Prepared by the System Protection and Controls Task Force of the NERC Planning Committee. Dated September 13, 2007.

2. "Predicating The Optimum Routine test Interval For Protection Relays," by J. J. Kumm, M.S. Weber, D. Hou, and E. O. Schweitzer, III, IEEE Transactions on Power Delivery, Vol. 10, No. 2, April 1995.

3. "Transmission Relay System Performance Comparison For 2000, 2001, 2002, 2003, 2004 and 2005," Working Group I17 of Power System Relaying Committee of IEEE Power Engineering Society, May 2006.

4. "A Survey of Relaying Test Practices," Special Report by WG I11 of Power System Relaying Committee of IEEE Power Engineering Society, September 16, 1999.

5. "Transmission Protective Relay System Performance Measuring Methodology," Working Group I3 of Power System Relaying Committee of IEEE Power Engineering Society, January 2002.

6. "Processes, Issues, Trends and Quality Control of Relay Settings," Working Group C3 of Power System Relaying Committee of IEEE Power Engineering Society, December 2006.

7. "Proposed Statistical Performance Measures for Microprocessor-Based Transmission-Line Protective Relays, Part I - Explanation of the Statistics, and Part II - Collection and Uses of Data," Working Group D5 of Power System Relaying Committee of IEEE Power Engineering Society, May 1995; Papers 96WM 016-6 PWRD and 96WM 127-1 PWRD, 1996 IEEE Power Engineering Society Winter Meeting.

8. "Analysis And Guidelines For Testing Numerical Protection Schemes," Final Report of CIGRE WG 34.10, August 2000.

9. "Use of Preventative Maintenance and System Performance Data to Optimize Scheduled Maintenance Intervals," H. Anderson, R. Loughlin, and J. Zipp, Georgia Tech Protective Relay Conference, May 1996.

PSMT SDT References

10. "Essentials of Statistics for Business and Economics" Anderson, Sweeney, Williams, 2003

11. "Introduction to Statistics and Data Analysis" - Second Edition, Peck, Olson, Devore, 2005

12. "Statistical Analysis for Business Decisions" Peters, Summers, 1968

Figures

Figure 1: Typical Transmission System

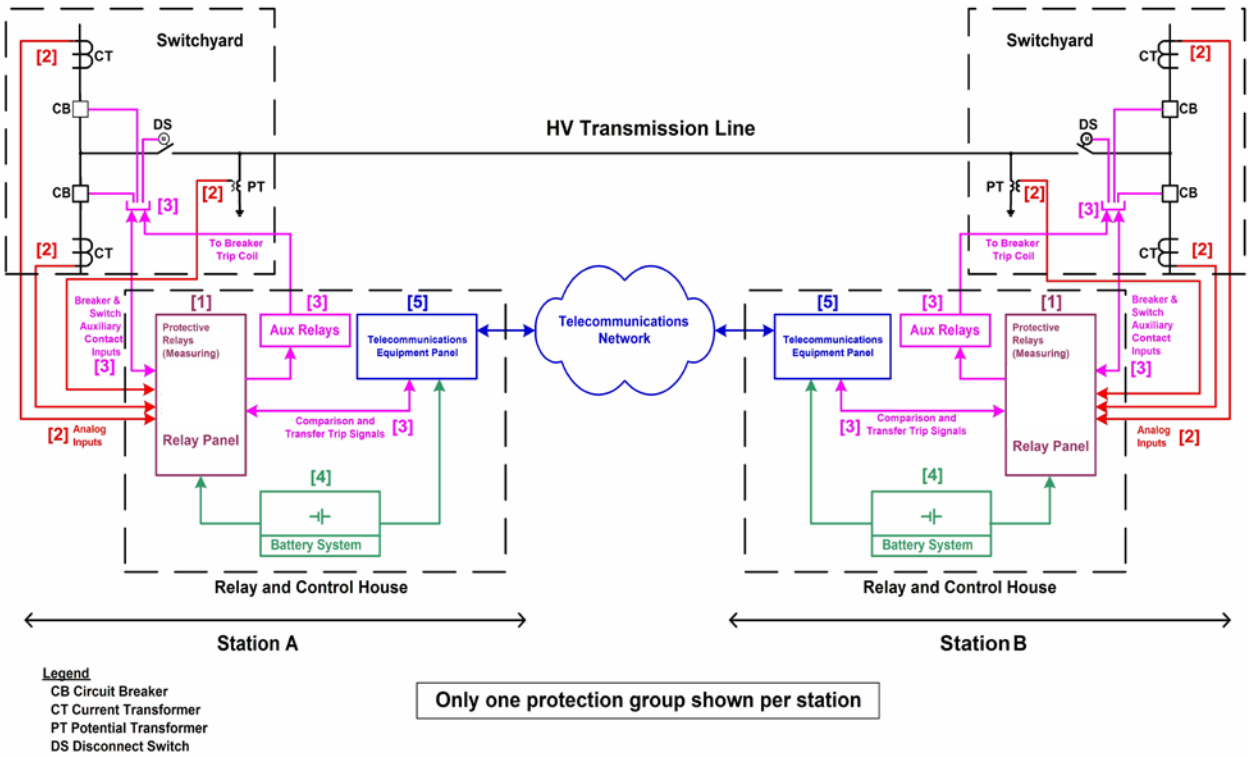

For information on components, see ***Figure 1 & 2 Legend – Components of Protection Systems***

Figure 2: Typical Generation System

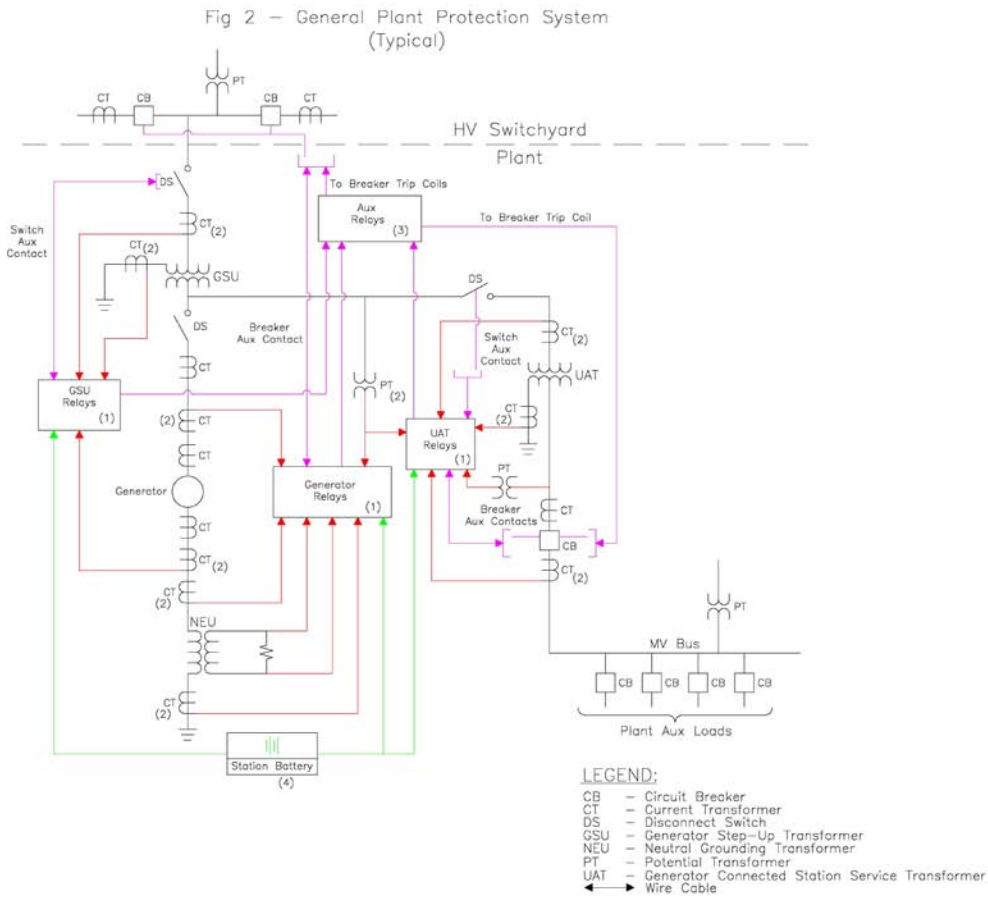

For information on components, see ***Figure 1 & 2 Legend – Components of Protection Systems***

Figure 1 & 2 Legend – Components of Protection Systems

Number in Figure	Component of Protection System	Includes	Excludes
1	Protective relays which respond to electrical quantities	All protective relays that use current and/or voltage inputs from current & voltage sensors and that trip the 86, 94 or trip coil.	Devices that use non-electrical methods of operation including thermal, pressure, gas accumulation, and vibration. Any ancillary equipment not specified in the definition of Protection Systems. Control and/or monitoring equipment that is not a part of the automatic tripping action of the Protection System
2	Voltage and current sensing devices providing inputs to protective relays	The signals from the voltage & current sensing devices to the protective relay input.	Voltage & current sensing devices that are not a part of the Protection System, including sync-check systems, metering systems and data acquisition systems.
3	Control circuitry associated with protective functions	All control wiring (or other medium for conveying trip signals) associated with the tripping action of 86 devices, 94 devices or trip coils (from all parallel trip paths). This would include fiber-optic systems that carry a trip signal as well as hard-wired systems that carry trip current.	Closing circuits, SCADA circuits, other devices in control scheme not passing trip current
4	Station dc supply	Batteries and battery chargers and any control power system which has the function of supplying power to the protective relays, associated trip circuits and trip coils.	Any power supplies that are not used to power protective relays or their associated trip circuits and trip coils.
5	Communications systems necessary for correct operation of protective functions	Tele-protection equipment used to convey specific information, in the form of analog or digital signals, necessary for the correct operation of protective functions.	Any communications equipment that is not used to convey information necessary for the correct operation of protective functions.

Additional information can be found in References

Appendix A

The following illustrates the concept of overlapping verifications and tests as summarized in Section 10 of the paper. As an example, Figure A-1 shows protection for a critical transmission line by carrier blocking directional comparison pilot relaying. The goal is to verify the ability of the entire two-terminal pilot protection scheme to protect for line faults, and to avoid over-tripping for faults external to the transmission line zone of protection bounded by the current transformer locations.

Figure A-1

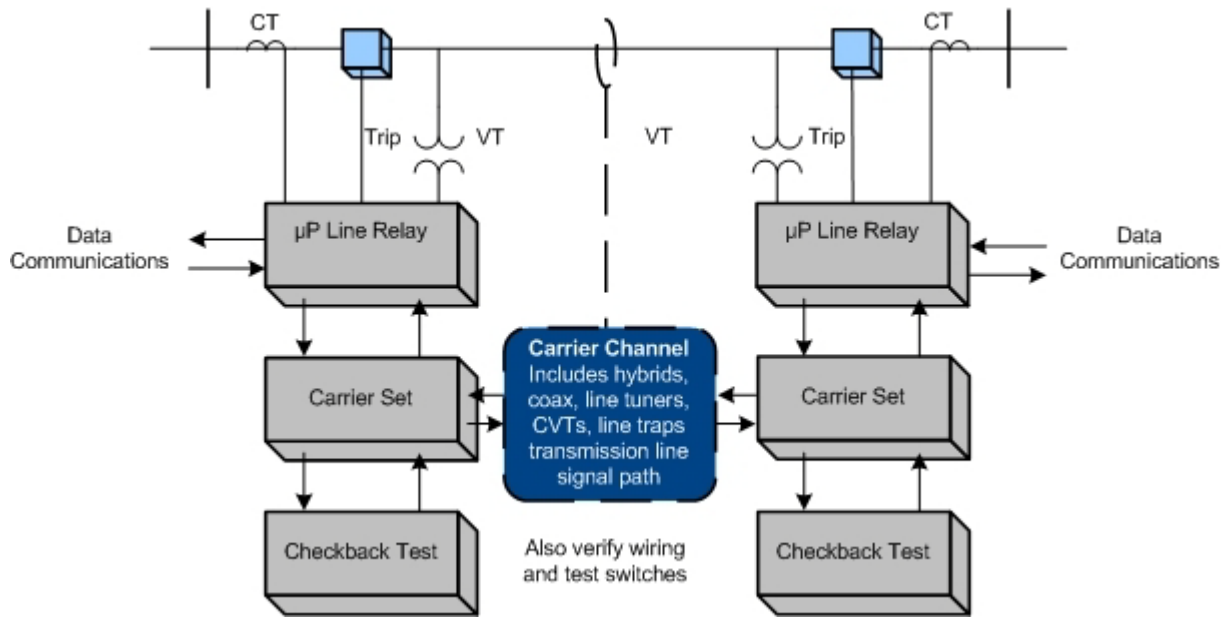

In this example (Figure A1), verification takes advantage of the self-monitoring features of microprocessor multifunction line relays at each end of the line. For each of the line relays themselves, the example assumes that the user has the following arrangements in place:

1. The relay has a data communications port that can be accessed from remote locations.
2. The relay has internal self-monitoring programs and functions that report failures of internal electronics, via communications messages or alarm contacts to SCADA.
3. The relays report loss of dc power, and the relays themselves or external monitors report the state of the dc battery supply.
4. The CT and PT inputs to the relays are used for continuous calculation of metered values of volts, amperes, plus Watts and VARs on the line. These metered values are reported by data communications. For maintenance, the user elects to compare these readings to those of other relays, meters, or DFRs. The other readings may be from redundant relaying or measurement systems or they may be derived from values in other protection zones. Comparison with other such readings to within required relaying accuracy verifies Voltage & Current Sensing Devices, wiring, and analog signal input processing of the relays. One effective way to do this is to utilize the

relay metered values directly in SCADA, where they can be compared with other references or state estimator values.

5. Breaker status indication from auxiliary contacts is verified in the same way as in (2). Status indications must be consistent with the flow or absence of current.
6. Continuity of the breaker trip circuit from dc bus through the trip coil is monitored by the relay and reported via communications.
7. Correct operation of the on-off carrier channel is also critical to security of the Protection System, so each carrier set has a connected or integrated automatic checkback test unit. The automatic checkback test runs several times a day. Newer carrier sets with integrated checkback testing check for received signal level and report abnormal channel attenuation or noise, even if the problem is not severe enough to completely disable the channel.

These monitoring activities plus the check-back test comprise automatic verification of all the Protection System elements that experience tells us are the most prone to fail. But, does this comprise a complete verification?

Figure A-2

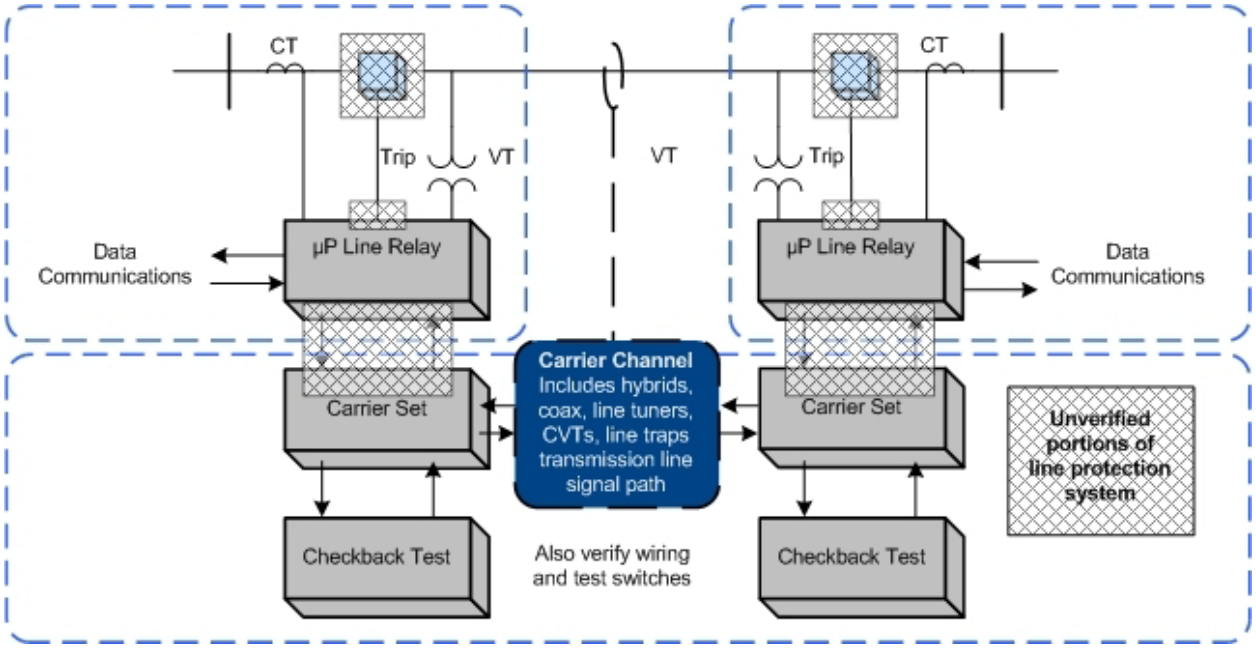

The dotted boxes of Figure A-2 show the sections of verification defined by the monitoring and verification practices just listed. These sections are not completely overlapping, and the shaded regions show elements that are not verified:

1. The continuity of trip coils is verified, but no means is provided for validating the ability of the circuit breaker to trip if the trip coil should be energized.
2. Within each line relay, all the microprocessors that participate in the trip decision have been verified by internal monitoring. However, the trip circuit is actually energized by the contacts of a small telephone-type "ice cube" relay within the line protective relay. The microprocessor energizes the coil of this ice cube relay through its output data port and a transistor driver circuit. There is no monitoring of the output port, driver circuit, ice cube relay, or contacts of that relay. These components are critical for tripping the circuit breaker for a fault.
3. The check-back test of the carrier channel does not verify the connections between the relaying microprocessor internal decision programs and the carrier transmitter keying circuit or the carrier receiver output state. These connections include microprocessor I/O ports, electronic driver circuits, wiring, and sometimes telephone-type auxiliary relays.
4. The correct states of breaker and disconnect switch auxiliary contacts are monitored, but this does not confirm that the state change indication is correct when the breaker or switch opens.

A practical solution for (1) and (2) is to observe actual breaker tripping, with a specified maximum time interval between trip tests. Clearing of naturally-occurring faults are demonstrations of operation that reset the time interval clock for testing of each breaker tripped in this way. If faults do not occur, manual tripping of the breaker through the relay trip output via data communications to the relay microprocessor meets the requirement for periodic testing.

PRC-005 does not address breaker maintenance, and its Protection System test requirements can be met by energizing the trip circuit in a test mode (breaker disconnected) through the relay microprocessor. This can be done via a front-panel button command to the relay logic, or application of a simulated fault with a relay test set. However, utilities have found that breakers often show problems during Protection System tests. It is recommended that Protection System verification include periodic testing of the actual tripping of connected circuit breakers.

Testing of the relay-carrier set interface in (3) requires that each relay key its transmitter, and that the other relay demonstrate reception of that blocking carrier. This can be observed from relay or DFR records during naturally occurring faults, or by a manual test. If the checkback test sequence were incorporated in the relay logic, the carrier sets and carrier channel are then included in the overlapping segments monitored by the two relays, and the monitoring gap is completely eliminated.

Appendix B — Protection System Maintenance Standard Drafting Team

Charles W. Rogers
Chairman
Consumers Energy Co.

John B. Anderson
Xcel Energy

Merle E. Ashton
Tri-State G&T

Corporation
Bob Bentert
Florida Power & Light Company

John Ciufo
Hydro One Inc

Sam Francis
Oncor

Carol A. Gerou
Midwest Reliability Organization

William D. Shultz
Southern Company Generation

Russell C. Hardison
Tennessee Valley Authority

David Harper
NRG Texas Maintenance Services

Mark Lucas
ComEd

Al McMeekin
NERC Staff
North American Electric Reliability

Mark Peterson
Great River Energy

Leonard Swanson, Jr
National Grid USA

Eric A. Udren
Quanta Technology

Philip B. Winston
Southern Company Transmission

John A. Zipp
ITC Holdings

NERC

NORTH AMERICAN ELECTRIC RELIABILITY CORPORATION

PRC-005-2 Protection System Maintenance

Supplementary Reference & FAQ

Draft

~~April 12~~June 2, 2011

Prepared by the

Protection System Maintenance and Testing Standard Drafting Team

116-390 Village Blvd., Princeton, NJ 08540
609.452.8060 | 609.452.9550 fax
www.nerc.com

Table of Contents

1. Introduction and Summary 4
2. Need for Verifying Protection System Performance 5
2.1 Existing NERC Standards for Protection System Maintenance and Testing 5
2.2 Protection System Definition 6
2.3 Applicability of New Protection System Maintenance Standards 6
2.3.1 Frequently Asked Questions: 7
2.4 Applicable Relays 8
2.4.1 Frequently Asked Questions: 9
3. Protection Systems Product Generations 10
4. Definitions 11
4.1 Frequently Asked Questions: 11
5. Time-Based Maintenance (TBM) Programs 13
5.1 Maintenance Practices 13
5.1.1 Frequently Asked Questions: 15
5.2 Extending Time-Based Maintenance 16
5.2.1 Frequently Asked Question: 17
6. Condition-Based Maintenance (CBM) Programs 18
6.1 Frequently Asked Questions: 19
7. Time-Based Versus Condition-Based Maintenance 20
7.1 Frequently Asked Questions: 20
8. Maximum Allowable Verification Intervals 25
8.1 Maintenance Tests 25
8.1.1 Table of Maximum Allowable Verification Intervals 26
8.1.2 Additional Notes for Tables 1-1 through 1-5 27
8.1.3 Frequently Asked Questions: 28
8.2 Retention of Records 33
8.2.1 Frequently Asked Questions: 33
8.3 Basis for Table 1 Intervals 36
8.4 Basis for Extended Maintenance Intervals for Microprocessor Relays 36
9. Performance-Based Maintenance Process 38
9.1 Minimum Sample Size 39
9.2 Frequently Asked Questions: 42
10. Overlapping the Verification of Sections of the Protection System 54
10.1 Frequently Asked Question: 55
11. Monitoring by Analysis of Fault Records 55

11.1 Frequently Asked Question: 56
12. Importance of Relay Settings in Maintenance Programs 57
12.1 Frequently Asked Questions: 58
13. Self-Monitoring Capabilities and Limitations 60
13.1 Frequently Asked Question: 61
14. Notification of Protection System Failures 62
15. Maintenance Activities 63
15.1 Protective Relays (Table 1-1) 63
15.1.1 Frequently Asked Question: 64
15.2 Voltage & Current Sensing Devices (Table 1-3) 64
15.2.1 Frequently Asked Questions: 65
15.3 Control circuitry associated with protective functions (Table 1-5) 67
15.3.1 Frequently Asked Questions: 68
15.4~~.~~ Batteries and DC Supplies (Table 1~~ Frequently Asked Questions:~~ 4) 69
~~15.5 Associated communications equipment (Table 1-2) ..~~15.4.1 Frequently Asked Questions: 70
~~15.5.1 Frequently Asked Questions: ...~~15.5 Associated communications equipment (Table 1-2) 81
~~15.6 Alarms (Table 2) .....~~15.5.1 Frequently Asked Questions: 82
15.6~~.1 Frequently Asked Question:~~ Alarms (Table 2) 85
~~15.7 Examples of Evidence of Compliance .....~~15.6.1 Frequently Asked Question: 85
~~15.7.1 Frequently Asked Questions: .....~~15.7 Examples of Evidence of Compliance 86
~~Yes.16. References .....~~15.7.1 Frequently Asked Questions: 86
~~16. References .....~~Yes. 87
~~Figures .....~~16. References 88
~~Figure 1: Typical Transmission System .....~~Figures 89
Figure ~~2~~1: Typical ~~Generation~~Transmission System 89
~~**Appendix B — Protection System Maintenance Standard Drafting Team** .~~Figure 2: Typical Generation System 90
Appendix B — Protection System Maintenance Standard Drafting Team 95

This supplementary reference to PRC-005-2 is not mandatory and enforceable.

1. Introduction and Summary

NERC currently has four Reliability Standards that are mandatory and enforceable in the United States and address various aspects of maintenance and testing of Protection and Control systems. These standards are:

PRC-005-1 — *Transmission and Generation Protection System Maintenance and Testing*

PRC-008-0 — *Underfrequency Load Shedding Equipment Maintenance Programs*

PRC-011-0 — *UVLS System Maintenance and Testing*

PRC-017-0 — *Special Protection System Maintenance and Testing*

While these standards require that applicable entities have a maintenance program for Protection Systems, and that these entities must be able to demonstrate they are carrying out such a program, there are no specifics regarding the technical requirements for Protection System maintenance programs. Furthermore, FERC Order 693 directed additional modifications respective to Protection System maintenance programs. PRC-005-2 combines and replaces PRC-005, PRC-008, PRC-011 and PRC-017.

2. Need for Verifying Protection System Performance

Protective relays have been described as silent sentinels, and do not generally demonstrate their performance until a fault or other power system problem requires that they operate to protect power system elements, or even the entire Bulk Electric System (BES). Lacking faults, switching operations or system problems, the Protection Systems may not operate, beyond static operation, for extended periods. A misoperation - a false operation of a Protection System or a failure of the Protection System to operate, as designed, when needed - can result in equipment damage, personnel hazards, and wide area disturbances or unnecessary customer outages. Maintenance or testing programs are used to determine the performance and availability of Protection Systems.

Typically, utilities have tested Protection Systems at fixed time intervals, unless they had some incidental evidence that a particular Protection System was not behaving as expected. Testing practices vary widely across the industry. Testing has included system functionality, calibration of measuring devices, and correctness of settings. Typically, a Protection System must be visited at its installation site and, in many cases, removed from service for this testing.

Fundamentally, a Reliability Standard for Protection System Maintenance and Testing requires the performance of the maintenance activities that are necessary to detect and correct plausible age and service related degradation of the Protection System components such that a properly built and commissioned Protection System will continue to function as designed over its service life.

Similarly station batteries which are an important part of the station dc supply are not called upon to provide instantaneous dc power to the Protection System until power is required by the Protection System to operate circuit breakers or interrupting devices to clear faults or to isolate equipment.

2.1 Existing NERC Standards for Protection System Maintenance and Testing

For critical BES protection functions, NERC Standards have required that each utility or asset owner define a testing program. The starting point is the existing Standard PRC-005, briefly restated as follows:

Purpose: To ~~ensure all transmission~~document and ~~generation~~implement programs for the maintenance of all Protection Systems affecting the reliability of the Bulk Electric System (BES) ~~are maintained and tested~~so that these Protection Systems are kept in working order.

PRC-005-1 is not specific on where the boundaries of the Protection Systems lie. However, the definition of Protection System in the NERC Glossary of Terms used in Reliability Standards indicates what must be included as a minimum.

At the beginning of the project to develop PRC-005-2, the definition of Protection System was:

Protective relays, associated communications systems, voltage and current sensing devices, station batteries and dc control circuitry.

Applicability: Owners of generation and transmission Protection Systems.

Requirements: The owner shall have a documented maintenance program with test intervals. The owner must keep records showing that the maintenance was performed at the specified intervals.

2.2 Protection System Definition

The most recently approved definition of Protection Systems is:

- Protective relays which respond to electrical quantities,
- communications systems necessary for correct operation of protective functions,
- voltage and current sensing devices providing inputs to protective relays,
- station dc supply associated with protective functions (including station batteries, battery chargers, and non-battery-based dc supply), and
- control circuitry associated with protective functions through the trip coil(s) of the circuit breakers or other interrupting devices.

2.3 Applicability of New Protection System Maintenance Standards

The BES purpose is to transfer bulk power. The applicability language has been changed from the original PRC-005:

"...affecting the reliability of the Bulk Electric System (BES)…"

To the present language:

"…~~ and~~ that are ~~designed to provide protection~~installed for the purpose of detecting faults on BES~~."~~ Elements (lines, buses, transformers, etc.)."

The drafting team intends that this Standard will follow with any definition of the Bulk Electric System. There should be no ambiguity; if the element is a BES element then the Protection System protecting that element should then be included within this Standard. If there is regional variation to the definition then there will be a corresponding regional variation to the Protection Systems that fall under this Standard.

There is no way for the Standard Drafting Team to know whether a specific 230KV line, 115KV line (even 69KV line), for example, should be included or excluded. Therefore, the team set the clear intent that the Standard language should simply be applicable to relays for BES elements.

The BES is a NERC defined term that, from time to time, may undergo revisions. Additionally, there may even be regional variations that are allowed in the present and future definitions. See the NERC glossary of terms for the present, in-force, definition. See the applicable regional reliability organization for any applicable allowed variations.

While this Standard will undergo revisions in the future, this Standard will not attempt to keep up with revisions to the NERC definition of BES but rather simply make BES Protection Systems applicable.

The Standard is applied to Generator Owners (GO) and Transmission Owners (TO) because GO's and TO's have equipment that is BES equipment. The Standard brings in Distribution Providers (DP) because depending on the station configuration of a particular substation, there may be Protection System equipment installed at a non-transmission voltage level (Distribution Provider equipment) that is wholly or partially installed to protect the BES. PRC-005-2 would apply to this equipment. An example is underfrequency load-shedding, which is frequently applied well down into the distribution system to meet PRC-007-0.

As this Standard is intended to replace the existing PRC-005, PRC-008, PRC-011 and PRC-017, those Standards are used in the construction of this revision of PRC-005-1. Much of the original intent of those Standards was carried forward whenever it was possible to continue the intent without a disagreement with FERC Order 693. For example the original PRC-008 was constructed quite differently than the original PRC-005. The drafting team agrees with the intent of this and notes that distributed tripping schemes would have to exhibit multiple failures to trip before they would prove to be significant as opposed to a single failure to trip of, for example, a Transmission Protection System Bus Differential lock-out relay. While many failures of these distribution breakers could add up to be significant, it is also believed that distribution breakers are operated often on just fault clearing duty and therefore the distribution circuit breakers are operated at least as frequently as any requirements that might have appeared in this Standard.

Additionally, since this Standard will now replace PRC-011 it will be important to make the distinction between under-voltage Protection Systems that protect individual loads and Protection Systems that are UVLS schemes that protect the BES. Any UVLS scheme that had been applicable under PRC-011 will now be applicable under this revision of PRC-005-1. An example of an Under-Voltage Load Shedding scheme that is not applicable to this Standard is one in which the tripping action was intended to prevent low distribution voltage to a specific load from a transmission system that was intact except for the line that was out of service, as opposed to preventing a cascading outage or transmission system collapse.

It had been correctly noted that the devices needed for PRC-011 are the very same types of devices needed in PRC-005.

Thus a Standard written for Protection Systems of the BES can easily make the needed requirements for Protection Systems and replace some other Standards at the same time.

2.3.1 Frequently Asked Questions:

What, exactly, is the BES, or Bulk Electric System?
BES is the abbreviation for Bulk Electric System. BES is a term in the Glossary of Terms used in Reliability Standards, and is not being modified within this draft Standard.
NERC's approved definition of Bulk Electric System is:

As defined by the Regional Reliability Organization, the electrical generation resources, transmission lines, interconnections with neighboring systems, and associated equipment, generally operated at voltages of 100 kV or higher. Radial transmission facilities serving only load with one transmission source are generally not included in this definition.

Each Regional Entity implements a definition of the Bulk Electric System that is based on this NERC definition, in some cases, supplemented by additional criteria. These regional definitions have been documented and provided to FERC as part of a *June ~~16~~14, 2007 Informational Filing*.

Why is Distribution Provider included within the Applicable Entities and as a responsible entity within several of the requirements? Wouldn't anyone having relevant facilities be a Transmission Owner?

Depending on the station configuration of a particular substation, there may be Protection System equipment installed at a non-transmission voltage level (Distribution Provider equipment) that is wholly or partially installed to protect the BES. PRC-005-2 would apply to this equipment. An example is underfrequency load-shedding, which is frequently applied well down into the distribution system to meet PRC-007-0.

We have an Under Voltage Load Shedding (UVLS) system in place that prevents one of our distribution substations from supplying extremely low voltage in the case of a specific transmission line outage. The transmission line is part of the BES. Does this mean that our UVLS system falls within this Standard?

The situation as stated indicates that the tripping action was intended to prevent low distribution voltage to a specific load from a transmission system that was intact except for the line that was out of service, as opposed to preventing cascading outage or transmission system collapse. This Standard is not applicable to this UVLS.

We have a UFLS scheme that sheds the necessary load through distribution-side circuit breakers and circuit reclosers. Do the trip-test requirements for circuit breakers apply to our situation?

No. Distributed tripping schemes would have to exhibit multiple failures to trip before they would prove to be significant as opposed to a single failure to trip of, for example, a Transmission Protection System Bus Differential lock-out relay. While many failures of these distribution breakers could add up to be significant, it is also believed that distribution breakers are operated often on just fault clearing duty and therefore the distribution circuit breakers are operated at least as frequently as any requirements that might have appeared in this Standard.

We have a UFLS scheme that, in some locales, sheds the necessary load through non-BES circuit breakers and occasionally even circuit switchers. Do the trip-test requirements for circuit breakers apply to our situation?

If your "non-BES circuit breaker" has been brought into this standard by the inclusion of UFLS requirements and otherwise would not have been brought into this standard, then the answer is that there are no trip-test requirements. For these devices that are otherwise non-BES assets, these tripping schemes would have to exhibit multiple failures to trip before they would prove to be as significant as (for example) a single failure to trip of a Transmission Protection System Bus Differential lock-out relay.

2.4 Applicable Relays

The NERC Glossary definition has a Protection System including relays, dc supply, current and voltage sensing devices, dc control circuitry and associated communications circuits. The relays to which this Standard applies are those protective relays that respond to electrical quantities and provide a trip output to trip coils, dc control circuitry or associated communications equipment. This definition extends to IEEE device # 86 (lockout relay) and IEEE device # 94 (tripping or trip-free relay) as these devices are tripping relays that respond to the trip signal of the protective relay that processed the signals from the current and voltage sensing devices.

Relays that respond to non-electrical inputs or impulses (such as, but not limited to, vibration, pressure, seismic, thermal or gas accumulation) are not included.

2.4.1 Frequently Asked Questions:

Are power circuit reclosers, reclosing relays, closing circuits and auto-restoration schemes covered in this Standard?

No. As stated in Requirement R1, this Standard covers protective relays that use measurements of electrical quantities to determine anomalies and to trip a portion of the BES. Reclosers, reclosing relays, closing circuits and auto-restoration schemes are used to cause devices to close as opposed to electrical-measurement relays and their associated circuits that cause circuit interruption from the BES; such closing devices and schemes are more appropriately covered under other NERC Standards. There is one notable exception: if a Special Protection System incorporates automatic closing of breakers, the related closing devices are part of the SPS and must be tested accordingly.

I use my protective relays only as sources of metered quantities and breaker status for SCADA and EMS through a substation distributed RTU or data concentrator to the control center. What are the maintenance requirements for the relays?
This Standard addresses only devices "that are applied on, or are designed to provide protection for the BES." Protective relays, providing only the functions mentioned in the question, are not included.

Is a Sudden Pressure Relay an auxiliary tripping relay?
No. IEEE C37.2-2008 assigns the device number 94 to auxiliary tripping relays. Sudden pressure relays are assigned device number 63. Sudden pressure relays are excluded from the Standard because it does not utilize voltage and/or current measurements to determine anomalies. Devices that use anything other than electrical detection means are excluded.

My mechanical device does not operate electrically and does not have calibration settings; what maintenance activities apply?
You must conduct a test(s) to verify the integrity of the trip circuit. This Standard does not cover circuit breaker maintenance or transformer maintenance. The Standard also does not cover testing of devices such as sudden pressure relays (63), temperature relays (49), and other relays which respond to mechanical parameters rather than electrical parameters.

The Standard specifically mentions auxiliary and lock-out relays; what is an auxiliary tripping relay?

An auxiliary relay, IEEE Device Number 94, is described in IEEE Standard C37.2-2008 as "A device that functions to trip a circuit breaker, contactor, or equipment; to permit immediate tripping by other devices; or to prevent immediate reclosing of a circuit interrupter if it should open automatically, even though its closing circuit is maintained closed."

What is a lock-out relay?

A lock-out relay, IEEE Device Number 86, is described in IEEE Standard C37.2 as "A device that trips and maintains the associated equipment or devices inoperative until it is reset by an operator, either locally or remotely."

3. Protection Systems Product Generations

The likelihood of failure and the ability to observe the operational state of a critical Protection System, both depends on the technological generation of the relays as well as how long they have been in service. Unlike many other transmission asset groups, protection and control systems have seen dramatic technological changes spanning several generations. During the past 20 years, major functional advances are primarily due to the introduction of microprocessor technology for power system devices such as primary measuring relays, monitoring devices, control systems, and telecommunications equipment.

Modern microprocessor based relays have six significant traits that impact a maintenance strategy:

- Self monitoring capability - the processors can check themselves, peripheral circuits, and some connected substation inputs and outputs such as trip coil continuity. Most relay users are aware that these relays have self monitoring, but are not focusing on exactly what internal functions are actually being monitored. As explained further below, every element critical to the Protection System must be monitored, or else verified periodically.
- Ability to capture fault records showing how the Protection System responded to a fault in its zone of protection, or to a nearby fault for which it is required not to operate.
- Ability to meter currents and voltages, as well as status of connected circuit breakers, continuously during non-fault times. The relays can compute values such as MW and MVAR line flows that are sometimes used for operational purposes such as SCADA.
- Data communications via ports that provide remote access to all of the results of Protection System monitoring, recording, and measurement.
- Ability to trip or close circuit breakers and switches through the Protection System outputs, on command from remote data communications messages or from relay front panel button requests.

- Construction from electronic components some of which have shorter technical life or service life than electromechanical components of prior Protection System generations.

There have been significant advances in the technology behind the other components of Protection Systems. Microprocessors are now a part of Battery Chargers, Associated Communications Equipment, Voltage and Current Measuring Devices and even the control circuitry (in the form of software-latches replacing lock-out relays, etc).

Any Protection System component can have self-monitoring and alarming capability, not just relays. Because of this technology, extended time intervals can find their way into all components of the Protection System.

4. Definitions

Protection System Maintenance Program (PSMP) — An ongoing program by which Protection System components are kept in working order and proper operation of malfunctioning components is restored. A maintenance program for a specific component includes one or more of the following activities:

- Verify — Determine that the component is functioning correctly.
- Monitor — Observe the routine in-service operation of the component.
- Test — Apply signals to a component to observe functional performance or output behavior, or to diagnose problems.
- Inspect — Detect visible signs of component failure, reduced performance and degradation.
- Calibrate — Adjust the operating threshold or measurement accuracy of a measuring element to meet the intended performance requirement.
- Restore — Return malfunctioning components to proper operation.

4.1 Frequently Asked Questions:

Why does PRC-005-2 not specifically require maintenance and testing procedures as reflected in the previous Standard, PRC-005-1?

PRC-005-1 does not require detailed maintenance and testing procedures, but instead requires summaries of such procedures, and is not clear on what is actually required. PRC-005-2 requires a documented maintenance program, and is focused on establishing requirements rather than prescribing methodology to meet those requirements. Between the activities identified in the tables 1-1 through 1-5 and Table 2 (collectively the "Tables"), and the various components of the definition established for a "Protection System Maintenance Program", PRC-005-2 establishes the activities and time-basis for a Protection System Maintenance Program to a level of detail not previously required.

Please clarify what is meant by restore in the definition of maintenance.

The description of "Restore" in the definition of a Protection System Maintenance Program, addresses corrective activities necessary to assure that the component is returned to working order following the discovery of its failure or malfunction. The Maintenance Activities specified in the Tables do not present any requirements related to Restoration; R3 of the Standard does require that the entity "initiate resolution of any identified maintenance correctable issues". Some examples of restoration (or correction of maintenance-correctable issues) include, but are not limited to, replacement of capacitors in distance relays to bring them to working order; replacement of relays, or other Protection System components, to bring the Protection System to working order; upgrade of ~~electro-mechanical~~electromechanical or solid-state protective relays to micro-processor based relays following the discovery of failed components. Restoration, as used in this context is not to be confused with Restoration rules as used in system operations. Maintenance activity necessarily includes both the detection of problems and the repairs needed to eliminate those problems. This Standard does not identify all of the Protection System problems that must be detected and eliminated, rather it is the intent of this Standard that an entity determines the necessary working order for their various devices and keeps them in working order. If an equipment item is repaired or replaced then the entity can restart the maintenance-time-interval-clock if desired, however the replacement of equipment does not remove any documentation requirements that would have been required to verify compliance with time-interval requirements; in other words do not discard maintenance data that goes to verify your work.

The retention of documentation for new and/or replaced equipment is all about proving that the maintenance intervals had been in compliance. For example, a long range plan of upgrades might lead an entity to ignore required maintenance; retaining the evidence of prior maintenance that existed before any retirements and upgrades proves compliance with the Standard.

5. Time-Based Maintenance (TBM) Programs

Time-based maintenance is the process in which Protection Systems are maintained or verified according to a time schedule. The scheduled program often calls for technicians to travel to the physical site and perform a functional test on Protection System components. However, some components of a TBM program may be conducted from a remote location - for example, tripping a circuit breaker by communicating a trip command to a microprocessor relay to determine if the entire Protection System tripping chain is able to operate the breaker. Similarly, all Protection System components can have the ability to remotely conduct tests, either on-command or routinely, the running of these tests can extend the time interval between hands-on maintenance activities.

5.1 Maintenance Practices

Maintenance and testing programs often incorporate the following types of maintenance practices:

- TBM – time-based maintenance – externally prescribed maximum maintenance or testing intervals are applied for components or groups of components. The intervals may have been developed from prior experience or manufacturers' recommendations. The TBM verification interval is based on a variety of factors, including experience of the particular asset owner, collective experiences of several asset owners who are members of a country or regional council, etc. The maintenance intervals are fixed, and may range in number of months or in years.

  TBM can include review of recent power system events near the particular terminal. Operating records may verify that some portion of the Protection System has operated correctly since the last test occurred. If specific protection scheme components have demonstrated correct performance within specifications, the maintenance test time clock can be reset for those components.

- PBM – Performance-Based Maintenance - intervals are established based on analytical or historical results of TBM failure rates on a statistically significant population of similar components. Some level of TBM is generally followed. Statistical analyses accompanied by adjustments to maintenance intervals are used to justify continued use of PBM-developed extended intervals when test failures or in-service failures occur infrequently.

- CBM – condition-based maintenance – continuously or frequently reported results from non-disruptive self monitoring of components demonstrate operational status as those components remain in service. Whatever is verified by CBM does not require manual testing, but taking advantage of this requires precise technical focus on exactly what parts are included as part of the self diagnostics. While the term "Condition-Based-Maintenance" (CBM) is no longer used within the Standard itself, it is important to note that the concepts of CBM are a part of the Standard (in the form of extended time intervals through status-monitoring). These extended time intervals are only allowed (in the absence of PBM) if the condition of the device is monitored (CBM). As a consequence of the "monitored-basis-time-intervals" existing within the Standard the explanatory discussions within this Supplementary Reference concerned with CBM will remain in this reference and are discussed as CBM.

  Microprocessor based Protection System components that perform continuous self-monitoring verify correct operation of most components within the device. Self-monitoring capabilities may include battery continuity, float voltages, unintentional grounds, the ac signal inputs to a relay, analog measuring circuits, processors and memory for measurement, protection, and data communications, trip circuit monitoring, and protection or data communications signals (and many, many more measurements). For those conditions, failure of a self-monitoring routine generates an alarm and may inhibit operation to avoid false trips. When internal components, such as critical output relay contacts, are not equipped with self-monitoring, they can be manually tested. The method of testing may be local or remote, or through inherent performance of the scheme during a system event.

The TBM is the overarching maintenance process of which the other types are subsets. Unlike TBM, PBM intervals are adjusted based on good or bad experiences. The CBM verification intervals can be hours or even milliseconds between non-disruptive self monitoring checks within or around components as they remain in service.

TBM, PBM, and CBM can be combined for individual components, or within a complete Protection System. The following diagram illustrates the relationship between various types of maintenance practices described in this section. In the Venn diagram the overlapping regions show the relationship of TBM with PBM historical information and the inherent continuous monitoring offered through CBM.

This figure shows:

- Region 1: The TBM intervals that are increased based on known reported operational condition of individual components that are monitoring themselves.
- Region 2: The TBM intervals that are adjusted up or down based on results of analysis of maintenance history of statistically significant population of similar products that have been subject to TBM.
- Region 3: Optimal TBM intervals based on regions 1 and 2.

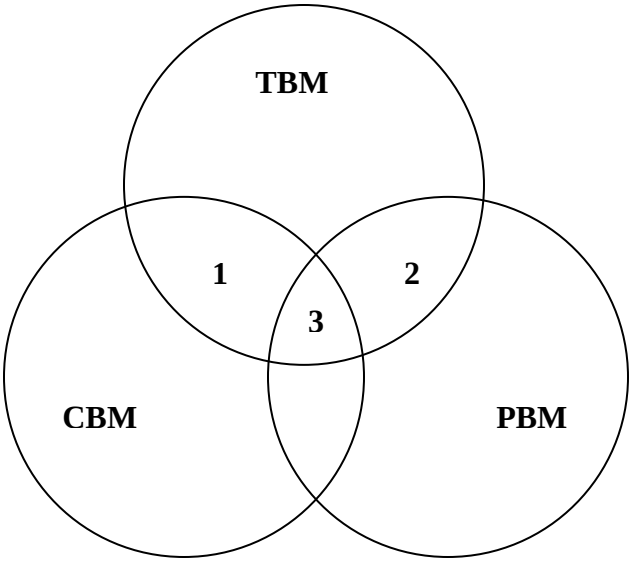

Relationship of time-based maintenance types

5.1.1 Frequently Asked Questions:

The Standard seems very complicated, and is difficult to understand. Can it be simplified?

Because the Standard is establishing parameters for condition-based Maintenance (R1) and Performance-Based Maintenance (R2) in addition to simple time-based Maintenance, it does appear to be complicated. At its simplest, an entity needs to ONLY perform time-based maintenance according to the unmonitored rows of the Tables. If an entity then wishes to take advantage of monitoring on its Protection System components and its available lengthened time intervals then it may, as long as the component has the listed monitoring attributes. If an entity wishes to use historical performance of its Protection System components to perform Performance-Based Maintenance, then R2 applies.

Please see the following diagram, which provides a "flow chart" of the Standard.

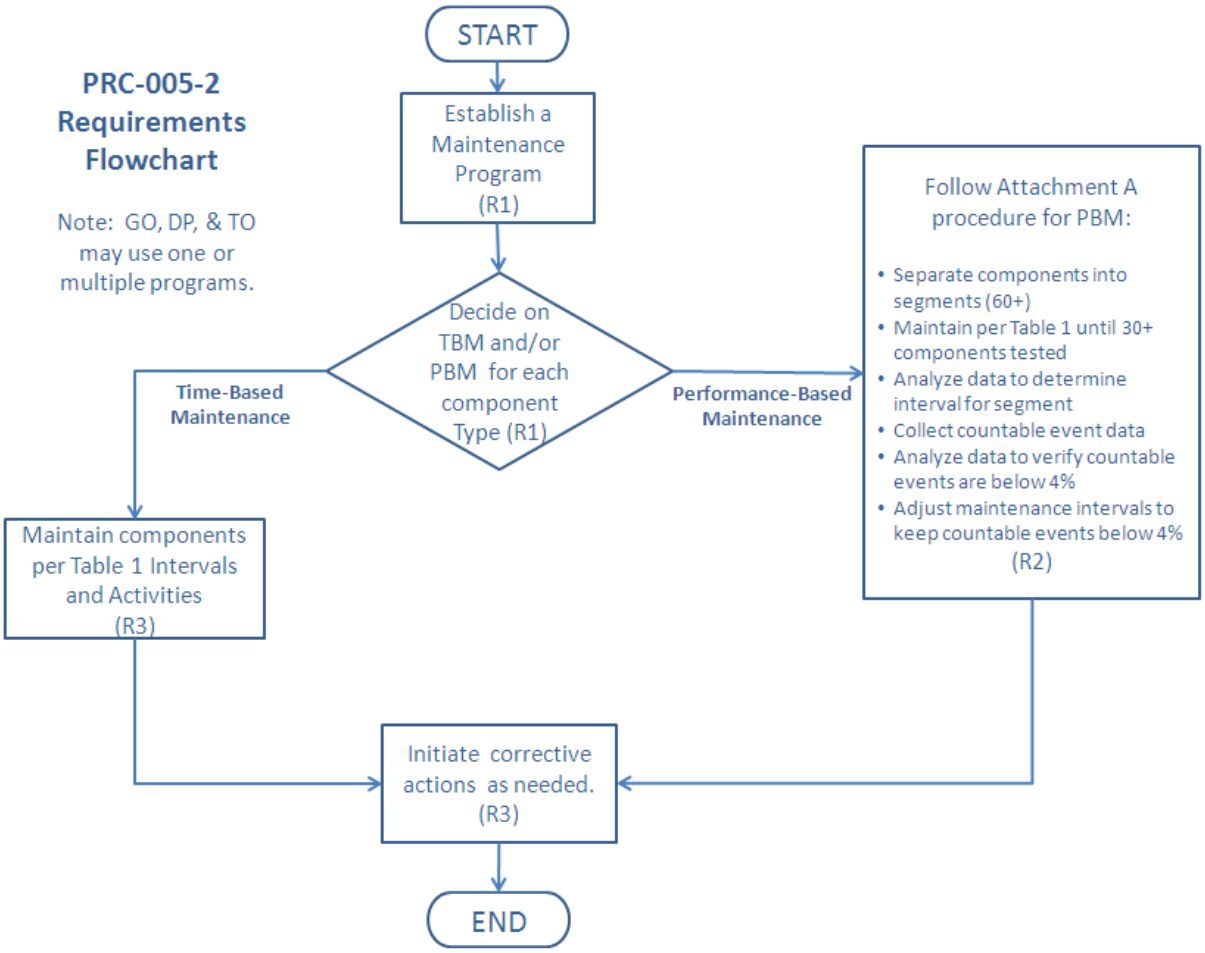

We have an electromechanical (unmonitored) relay that has a trip output to a lockout relay (unmonitored) which trips our transformer off-line by tripping the transformer's high-side and low-side circuit breakers. What testing must be done for this system?
This system is made up of components that are all unmonitored. Assuming a time-based Protection System maintenance program schedule (as opposed to a Performance-Based maintenance program), each component must be maintained per the most frequent hands-on activities listed in the Tables 1-1 through 1-5.

5.2 Extending Time-Based Maintenance

All maintenance is fundamentally time-based. Default time-based intervals are commonly established to assure proper functioning of each component of the Protection System, when data on the reliability of the components is not available other than observations from time-based maintenance. The following factors may influence the established default intervals:

- If continuous indication of the functional condition of a component is available (from relays or chargers or any self monitoring device), then the intervals may be extended or

manual testing may be eliminated. This is referred to as condition-based maintenance or CBM. CBM is valid only for precisely the components subject to monitoring. In the case of microprocessor-based relays, self-monitoring may not include automated diagnostics of every component within a microprocessor.

- Previous maintenance history for a group of components of a common type may indicate that the maintenance intervals can be extended while still achieving the desired level of performance. This is referred to as Performance-Based Maintenance or PBM. It is also sometimes referred to as reliability-centered maintenance or RCM, but PBM is used in this document.
- Observed proper operation of a component may be regarded as a maintenance verification of the respective component or element in a microprocessor-based device. For such an observation, the maintenance interval may be reset only to the degree that can be verified by data available on the operation. For example, the trip of an electromechanical relay for a fault verifies the trip contact and trip path, but only through the relays in series that actually operated; one operation of this relay cannot verify correct calibration.

Excessive maintenance can actually decrease the reliability of the component or system. It is not unusual to cause failure of a component by removing it from service and restoring it. The improper application of test signals may cause failure of a component. For example, in electromechanical overcurrent relays, test currents have been known to destroy convolution springs.

In addition, maintenance usually takes the component out of service, during which time it is not able to perform its function. Cutout switch failures, or failure to restore switch position, commonly lead to protection failures.

5.2.1 Frequently Asked Question:

If I show the protective device out of service while it is being repaired then can I add it back as a new protective device when it returns? If not, my relay testing history would show that I was out of compliance for the last maintenance cycle.

The maintenance and testing requirements (R3) (in essence) state "…shall implement and follow its PSMP …" if not then actions must be initiated to correct the deviance. The type of corrective activity is not stated; however it could include repairs or replacements.

Your documentation requirements will increase, of course, to demonstrate that your device tested bad and had corrective actions initiated. Your regional entity could very well ask for documentation showing status of your corrective actions.

6. Condition-Based Maintenance (CBM) Programs

Condition-based maintenance is the process of gathering and monitoring the information available from modern microprocessor-based relays and other intelligent electronic devices (IEDs) that monitor Protection System elements. These devices generate monitoring information during normal operation, and the information can be assessed at a convenient location remote from the substation. The information from these relays and IEDs is divided into two basic types:

1. Information can come from background self-monitoring processes, programmed by the manufacturer, or by the user in device logic settings. The results are presented by alarm contacts or points, front panel indications, and by data communications messages.
2. Information can come from event logs, captured files, and/or oscillographic records for faults and disturbances, metered values, and binary input status reports. Some of these are available on the device front panel display, but may be available via data communications ports. Large files of fault information can only be retrieved via data communications. These results comprise a mass of data that must be further analyzed for evidence of the operational condition of the Protection System.

Using these two types of information, the user can develop an effective maintenance program carried out mostly from a central location remote from the substation. This approach offers the following advantages:

1. Non-invasive Maintenance: The system is kept in its normal operating state, without human intervention for checking. This reduces risk of damage, or risk of leaving the system in an inoperable state after a manual test. Experience has shown that keeping human hands away from equipment known to be working correctly enhances reliability.
2. Virtually Continuous Monitoring: CBM will report many hardware failure problems for repair within seconds or minutes of when they happen. This reduces the percentage of problems that are discovered through incorrect relaying performance. By contrast, a hardware failure discovered by TBM may have been there for much of the time interval between tests, and there is a good chance that some devices will show health problems by incorrect operation before being caught in the next test round. The frequent or continuous nature of CBM makes the effective verification interval far shorter than any required TBM maximum interval.

6.1 Frequently Asked Questions:

My microprocessor relays and dc circuit alarms are contained on relay panels in a 24-hour attended control room. Does this qualify as an extended time interval condition-based system?

Yes, provided the station attendant (plant operator, etc.) monitors the alarms and other indications (comparable to the monitoring attributes) and reports them within the given time limits that are stated in the criteria of the Tables.

When documenting the basis for inclusion of components into the appropriate levels of monitoring as per Requirement R1.4 of the Standard, is it necessary to provide this documentation about the device by listing of every component and the specific monitoring attributes of each device?

No. While maintaining this documentation on the device level would certainly be permissible, it is not necessary. Global statements can be made to document appropriate levels of monitoring for the entire population of a component type or portion thereof.

For example, it would be permissible to document the conclusion that all BES substation dc supply battery chargers are Monitored by stating the following within the program description:

> "All substation dc supply battery chargers are considered Monitored and subject to the rows for monitored equipment of Table 1-4 requirements as all substation dc supply battery chargers are equipped with dc voltage alarms and ground detection alarms that are sent to the manned control center."

Similarly, it would be acceptable to use a combination of a global statement and a device level list of exclusions. Example:

> "Except as noted below, all substation dc supply battery chargers are considered Monitored and subject to the rows for monitored equipment of Table 1-4 requirements as all substation dc supply battery chargers are equipped with dc voltage alarms and ground detection alarms that are sent to the manned control center. The dc supply battery chargers of Substation X, Substation Y, and Substation Z are considered Unmonitored and subject to the rows for unmonitored equipment in Table 1-4 requirements as they are not equipped with ground detection capability."

Regardless whether this documentation is provided by device listing of monitoring attributes, by global statements of the monitoring attributes of an entire population of component types, or by some combination of these methods, it should be noted that auditors may request supporting drawings or other documentation necessary to validate the inclusion of the device(s) within the appropriate level of monitoring. This supporting background information need not be maintained within the program document structure but should be retrievable if requested by an auditor.

7. Time-Based Versus Condition-Based Maintenance

Time-based and condition-based maintenance programs are both acceptable, if implemented according to technically sound requirements. Practical programs can employ a *combination of time-based and condition-based maintenance.* The Standard requirements introduce the concept of optionally using condition monitoring as a documented element of a maintenance program.

The Federal Energy Regulatory Commission (FERC), in its Order Number 693 Final Rule dated March 16, 2007 (18 CFR Part 40, Docket No. RM06-16-000) on Mandatory Reliability Standards for the Bulk-Power System, directed NERC to submit a modification to PRC-005-1 that includes a requirement that maintenance and testing of a Protection System must be carried out within a maximum allowable interval that is appropriate to the type of the Protection System and its impact on the reliability of the Bulk Power System. Accordingly, this Supplementary Reference Paper refers to the specific maximum allowable intervals in PRC-005-2. The defined time limits allow for longer time intervals if the maintained component is monitored.

A key feature of condition-based monitoring is that it effectively reduces the time delay between the moment of a protection failure and time the Protection System owner knows about it, for the monitored segments of the Protection System. In some cases, the verification is practically continuous - the time interval between verifications is minutes or seconds. Thus, technically sound, condition-based verification, meets the verification requirements of the FERC order even more effectively than the strictly time-based tests of the same system components.

The result is that:

This NERC Standard permits utilities to use a technically sound approach and to take advantage of remote monitoring, data analysis, and control capabilities of modern Protection Systems to reduce the need for periodic site visits and invasive testing of components by on-site technicians. This periodic testing must be conducted within the maximum time intervals specified in Tables 1-1 through 1-5 and Table 2 of PRC-005-2.

7.1 Frequently Asked Questions:

What is a Calendar Year?
Calendar Year - January 1 through December 31 of any year. As an example, if an event occurred on June 17, 2009 and is on a "One Calendar Year Interval", the next event would have to occur on or before December 31, 2010.

Please provide an example of "3 Calendar Months".
If a maintenance activity is described as being needed every 3 Calendar Months then it is performed in a (given) month and due again 3 months later. For example a battery bank is inspected in month number 1 then it is due again in month number 4. And specifically consider that you perform your battery inspection on January 3, 2010 then it must be inspected again before the end of April. Another example could be that a 3-month inspection was performed in January is due in April, but if performed in March (instead of April) would still be due three

months later therefore the activity is due again June. Basically every "3 Calendar Months" means to add 3 months from the last time the activity was performed.

Please provide an example of the unmonitored versus other levels of monitoring available?
An unmonitored Protection System has no monitoring and alarm circuits on the Protection System components. A Protection System component that has monitoring attributes but no alarm output connected is considered to be ~~un-monitored~~unmonitored.

A monitored Protection System or an individual monitored component of a Protection System has monitoring and alarm circuits on the Protection System components. The alarm circuits must alert, within 24 hours, a location wherein corrective action can be initiated. This location might be, but not limited to an Operations Center, Dispatch Office, Maintenance Center or even a portable SCADA system.

There can be a combination of monitored and unmonitored Protection Systems within any given scheme, substation or plant; there can also be a combination of monitored and unmonitored components within any given Protection System.

Example #1: A combination of monitored and unmonitored components within a given Protection System might be:

- A microprocessor relay with an internal alarm connected to SCADA to alert 24-hr staffed operations center; it has internal self diagnosis and alarming. (monitored)
- Instrumentation transformers, with no monitoring, connected as inputs to that relay. (unmonitored)
- A Vented Lead-Acid battery with a low voltage alarm for the station dc supply voltage and an unintentional grounds detection alarm connected to SCADA. (monitoring varies)
- A circuit breaker with a trip coil and the trip circuit is not monitored. (unmonitored)

Given the particular components and conditions, and using ~~the~~ Table 1 ~~("Maximum Allowable Testing Intervals and Maintenance Activities")~~ and Table 2 ~~("Alarming Paths and Monitoring"),~~ the particular components have maximum activity intervals of:

Every 3 calendar months, verify:

- Electrolyte level (station dc supply voltage and unintentional ground detection is being maintained more frequently by the monitoring system).

Every 18 calendar months, verify/inspect the following:

- Battery bank ohmic values to station battery baseline (if performance tests are not opted)
- Battery charger float voltage
- Battery rack integrity
- Cell condition of all individual battery cells (where visible)
- Battery continuity

- Battery terminal connection resistance
- Battery cell-to-cell resistance (where available to measure)

Every 6 calendar years, perform/verify the following:

- Battery performance test (if ohmic tests are not opted)
- Verify that each trip coil is able to operate the circuit breaker, interrupting device, or mitigating device
- For ~~electro-mechanical~~electromechanical lock-out relays and auxiliary relays, electrical operation of electromechanical trip and auxiliary devices

Every 12 calendar years, verify the following:

- Microprocessor relay settings are as specified
- Operation of the microprocessor's relay inputs and outputs that are essential to proper functioning of the Protection System
- Acceptable measurement of power system input values seen by the microprocessor protective relay
- ~~Instrumentation transformers~~Verify that current and voltage signal values are provided to the protective relays
- Protection System component monitoring for the battery system signals are conveyed to a location where corrective action can be initiated
- The microprocessor relay alarm signals are conveyed to a location where corrective action can be initiated
- Verify all paths ~~of~~in the control ~~and~~circuitry associated with protective functions through the trip ~~circuits~~coil(s) of the circuit breakers or other interrupting devices

Example #2: A combination of monitored and unmonitored components within a given Protection System might be:

- A microprocessor relay with integral alarm that is not connected to SCADA. (unmonitored)
- ~~Instrument transformers~~Current and voltage signal values, with no monitoring, connected as inputs to that relay. (unmonitored)
- A Vented Lead-Acid battery with a low voltage alarm for the station dc supply voltage and an unintentional grounds detection alarm connected to SCADA. (monitoring varies)
- A circuit breaker with a trip coil, with no circuits monitored. (unmonitored)

Given the particular components and conditions, and using the Table 1 ("Maximum Allowable Testing Intervals and Maintenance Activities") and Table 2 ("Alarming Paths and Monitoring"), the particular components have maximum activity intervals of:

Every 3 calendar months, verify:

- Electrolyte level (Station dc supply voltage and unintentional ground detection is being maintained more frequently by the monitoring system)

Every 18 calendar months, verify/inspect the following:

- Battery bank ohmic values to station battery baseline (if performance tests are not opted)
- Battery charger float voltage
- Battery rack integrity
- Cell condition of all individual battery cells (where visible)
- Battery continuity
- Battery terminal connection resistance
- Battery cell-to-cell resistance (where available to measure)

Every 6 calendar years, verify/perform the following:

- Verify operation of the relay inputs and outputs that are essential to proper functioning of the Protection System
- Verify acceptable measurement of power system input values as seen by the relays
- Verify that each trip coil is able to operate the circuit breaker, interrupting device, or mitigating device
- For ~~electro-mechanical~~electromechanical lock-out relays and auxiliary relays, electrical operation of electromechanical trip and auxiliary devices
- Battery performance test (if ohmic tests are not opted)

Every 12 calendar years, verify the following:

- ~~Instrumentation transformers~~
- Verify that current and voltage signal values are provided to the protective relays
- Verify that Protection System component monitoring for the battery system signals are conveyed to a location where corrective action can be initiated
- Verify all paths ~~of the control and trip circuits~~
- in the control circuitry associated with protective functions through the trip coil(s) of the circuit breakers or other interrupting devices **Example #3:** A combination of monitored and unmonitored components within a given Protection System might be:
  - A microprocessor relay with alarm connected to SCADA to alert 24-hr staffed operations center; it has internal self diagnosis and alarms. (monitored)
  - ~~Instrument transformers~~Current and voltage signal values, with monitoring, connected as inputs to that relay (monitored)
  - Vented Lead-Acid battery without any alarms connected to SCADA (unmonitored)
  - Circuit breaker with a trip coil, with no circuits monitored (unmonitored)

Given the particular components, conditions, and using the Table 1 ("Maximum Allowable Testing Intervals and Maintenance Activities") and Table 2 ("Alarming Paths and Monitoring"), the particular components shall have maximum activity intervals of:

Every 3 calendar months, verify/inspect the following:

- Station dc supply voltage
- For unintentional grounds
- Electrolyte level

Every 18 calendar months, verify/inspect the following:

- Battery bank ohmic values to station battery baseline (if performance tests are not opted)
- Battery charger float voltage
- Battery rack integrity
- Battery continuity
- Battery terminal connection resistance
- Battery cell-to-cell resistance (where available to measure)
- Cell condition of all individual battery cells (where visible)

Every 6 calendar years, perform/verify the following:

- Battery performance test (if ohmic tests are not opted)
- Verify that each trip coil is able to operate the circuit breaker, interrupting device, or mitigating device
- For ~~electro-mechanical~~electromechanical lock-out relays and auxiliary relays, electrical operation of electromechanical trip and auxiliary devices

Every 12 calendar years, verify the following:

- The microprocessor relay alarm signals are conveyed to a location where corrective action can be taken
- Microprocessor relay settings are as specified
- Operation of the microprocessor's relay inputs and outputs that are essential to proper functioning of the Protection System
- Acceptable measurement of power system input values seen by the microprocessor protective relay
- Verify all paths ~~of~~in the control ~~and~~circuitry associated with protective functions through the trip ~~circuits~~coil(s) of the circuit breakers or other interrupting devices

Why do components have different maintenance activities and intervals if they are monitored?

The intent behind different activities and intervals for monitored equipment is to allow less frequent manual intervention when more information is known about the condition of Protection System components. Condition-Based Maintenance is a valuable asset to improve reliability.

Can all components in a Protection System be monitored?
No. For some components in a Protection System, monitoring will not be relevant. For example a battery will always need some kind of inspection.

We have a 30 year old oil circuit breaker with a red indicating lamp on the substation relay panel that is illuminated only if there is continuity through the breaker trip coil. There is no SCADA monitor or relay monitor of this trip coil. The line protection relay package that trips this circuit breaker is a microprocessor relay that has an integral alarm relay that will assert on a number of conditions that includes a loss of power to the relay. This alarm contact connects to our SCADA system and alerts our 24-hour operations center of relay trouble when the alarm contact closes. This microprocessor relay trips the circuit breaker only and does not monitor trip coil continuity or other things such as trip current. Are the components monitored or not? How often must I perform maintenance?
The protective relay is monitored and can be maintained every 12 years or when a maintenance correctable issue arises. The control circuitry can be maintained every 12 years. The trip coil(s) has to be electrically operated at least once every 6 years.

8. Maximum Allowable Verification Intervals

The Maximum Allowable Testing Intervals and Maintenance Activities show how CBM with newer device types can reduce the need for many of the tests and site visits that older Protection System components require. As explained below, there are some sections of the Protection System that monitoring or data analysis may not verify. Verifying these sections of the Protection Systems requires some persistent TBM activity in the maintenance program. However, some of this TBM can be carried out remotely - for example, exercising a circuit breaker through the relay tripping circuits using the relay remote control capabilities can be used to verify function of one tripping path and proper trip coil operation, if there has been no fault or routine operation to demonstrate performance of relay tripping circuits.

8.1 Maintenance Tests

Periodic maintenance testing is performed to ensure that the protection and control system is operating correctly after a time period of field installation. These tests may be used to ensure that individual components are still operating within acceptable performance parameters - this type of test is needed for components susceptible to degraded or changing characteristics due to aging and wear. Full system performance tests may be used to confirm that the total Protection System functions from measurement of power system values, to properly identifying fault characteristics, to the operation of the interrupting devices.

8.1.1 Table of Maximum Allowable Verification Intervals

Table 1 (collectively known as Table 1, individually called out as Tables 1-1 through 1-5), in the Standard, specifies maximum allowable verification intervals for various generations of Protection Systems and categories of equipment that comprise Protection Systems. The right column indicates maintenance activities required for each category.

The types of components are illustrated in Figures 1 and 2 at the end of this paper. Figure 1 shows an example of telecommunications-assisted line Protection System comprising substation equipment at each terminal and a telecommunications channel for relaying between the two substations. Figure 2 shows an example of a Generation station layout. The various subsystems of a Protection System that need to be verified are shown. UFLS, UVLS, and SPS are additional categories of Table 1 that are not illustrated in these figures. UFLS, UVLS and SPS all use identical equipment as Protection Systems in the performance of their functions and therefore have the same maintenance needs.

While it is easy to associate protective relays to multiple levels of monitoring, it is also true that most of the components that can make up a Protection System can also have technological advancements that place them into higher levels of monitoring.

To use the Maintenance Activities and Intervals Tables from PRC-005-2:

- First find the Table associated with your component. The tables are arranged in the order of mention in the definition of Protection System;
    - Table 1-1 is for protective relays,
    - Table 1-2 is for the associated communications systems,
    - Table 1-3 is for current and voltage sensing devices,
    - Table 1-4 is for station dc supply and
    - Table 1-5 is for control circuits. There is an additional table,
    - Table 2, which brings alarms into the maintenance arena; this was broken out to simplify the other tables.
- Next look within that table for your device and its degree of monitoring. The tables have different hands-on maintenance activities prescribed depending upon the degree to which you monitor your equipment. Find the maintenance activity that applies to the monitoring level that you have on your piece of equipment.
- This Maintenance activity is the minimum maintenance activity that must be documented.
- If your PSMP (plan) requires more activities then you must perform and document to this higher standard.
- After the maintenance activity is known, check the Maximum Maintenance Interval; this time is the maximum time allowed between hands-on maintenance activity cycles of this component.
- If your PSMP (plan) requires activities more often than the Tables maximum then you must perform and document those activities to your more stringent standard.

- Any given component of a Protection System can be determined to have a degree of monitoring that may be different from another component within that same Protection System. For example, in a given Protection System it is possible for an entity to have a monitored protective relay and an unmonitored associated communications system; this combination would require hands-on maintenance activity on the relay at least once every 12 years and attention paid to the communications system as often as every 3 months.
- An entity does not have to utilize the extended time intervals made available by this use of condition-based monitoring. An easy choice to make is to simply utilize the unmonitored level of maintenance made available on each of the 5 Tables. While the maintenance activities resulting from this choice would require more maintenance man-hours, the maintenance requirements may be simpler to document and the resulting maintenance plans may be easier to create.

For each Protection System component, Table 1 shows maximum allowable testing intervals for the various degrees of monitoring. These degrees of monitoring, or levels, range from the legacy unmonitored through a system that is more comprehensively monitored.

It has been noted here that an entity may have a PSMP that is more stringent than PRC-005-2. There may be any number of reasons that an entity chooses a more stringent plan than the minimums prescribed within PRC-005-2, most notable of which is an entity using performance based maintenance methodology. (Another reason for having a more stringent plan than is required could be a regional entity could have more stringent requirements.) Regardless of the rationale behind an entity's more stringent plan, it is incumbent upon them to perform the activities, and perform them at the stated intervals, of the entity's PSMP. A quality PSMP will help assure system reliability and adhering to any given PSMP should be the goal.

8.1.2 Additional Notes for Tables 1-1 through 1-5

1. For ~~electro-mechanical~~electromechanical relays, adjustment is required to bring measurement accuracy within the tolerance needed by the asset owner. Microprocessor ~~-~~ relays with no remote monitoring of alarm contacts, etc, are ~~un-monitored~~unmonitored relays and need to be verified within the Table interval as other ~~un-monitored~~unmonitored relays but may be verified as functional by means other than testing by simulated inputs.

2. Microprocessor relays typically are specified by manufacturers as not requiring calibration, but acceptable measurement of power system input values must be verified (verification of the Analog to Digital [A/D] converters) within the Table intervals. The integrity of the digital inputs and outputs that are used as protective functions must be verified within the Table intervals.

3. Any Phasor Measurement Unit (PMU) function whose output is used in a Protection System or SPS (as opposed to a monitoring task) must be verified as a component in a Protection System.

4. In addition to verifying the circuitry that supplies dc to the Protection System, the owner must maintain the station dc supply. The most widespread station dc supply is the station battery and charger. Unlike most Protection System components physical inspection of station batteries for signs of component failure, reduced performance, and degradation

are required to ensure that the station battery is reliable enough to deliver dc power when required. IEEE Standards 450, 1188, and 1106 for Vented Lead-Acid, Valve-Regulated Lead-Acid, and Nickel-Cadmium batteries, respectively (which are the most commonly used substation batteries on the NERC BES) have been developed as an important reference source of maintenance recommendations. The Protection System owner might use the applicable IEEE recommended practice which contains information and recommendations concerning the maintenance, testing and replacement of its substation battery. However, the methods prescribed in these IEEE recommendations cannot be specifically required because they do not apply to all battery applications.

5. Aggregated small entities might distribute the testing of the population of UFLS/UVLS systems, and large entities will usually maintain a portion of these systems in any given year. Additionally, if relatively small quantities of such systems do not perform properly, it will not affect the integrity of the overall program. Thus these distributed systems have decreased requirements as compared to other Protection Systems.
6. Voltage & Current Sensing Device circuit input connections to the Protection System relays can be verified by (but not limited to) comparison of measured values on live circuits or by using test currents and voltages on equipment out of service for maintenance. The verification process can be automated or manual. The values should be verified to be as expected, (phase value and phase relationships are both equally important to verify).
7. "End-to-end test" as used in this Supplementary Reference is any testing procedure that creates a remote input to the local communications-assisted trip scheme. While this can be interpreted as a GPS-type functional test it is not limited to testing via GPS. Any remote scheme manipulation that can cause action at the local trip path can be used to functionally-test the dc Control Circuitry. A documented real-time trip of any given trip path is acceptable in lieu of a functional trip test. It is possible, with sufficient monitoring, to be able to verify each and every parallel trip path that participated in any given dc Control Circuit trip. Or, another possible solution is that a single trip path from a single monitored relay can be verified to be the trip path that successfully tripped during a real-time operation. The variations are only limited by the degree of engineering and monitoring that an entity desires to pursue.
8. A/D verification may use relay front panel value displays, or values gathered via data communications. Groupings of other measurements (such as vector summation of bus feeder currents) can be used for comparison if calibration requirements assure acceptable measurement of power system input values.
9. Notes 1-8 attempt to describe some testing activities; they do not represent the only methods to achieve these activities but rather some possible methods. Technological advances, ingenuity and/or industry accepted techniques can all be used to satisfy maintenance activity requirements; the Standard is technology and method neutral in most cases.

8.1.3 Frequently Asked Questions:

What is meant by "Verify that settings are as specified" maintenance activity in Table 1-1?
Verification of settings is an activity directed mostly towards microprocessor based relays.

For relay maintenance departments that choose to test microprocessor based relays in the same manner as ~~electro-mechanical~~electromechanical relays are tested, the testing process sometimes requires that some specific functions be disabled. Later tests might enable the functions previously disabled but perhaps still other functions or logic statements were then masked out. It is imperative that, when the relay is placed into service, the settings in the relay be the settings that were intended to be in that relay or as the Standard states "…settings are as specified."

Many of the microprocessor based relays available today have software tools which provide this functionality and generate reports for this purpose.

For evidence or documentation of this requirement a simple recorded acknowledgement that the settings were checked to be as specified is sufficient.

The drafting team was careful not to require "…that the relay settings be correct…" because it was believed that this might then place a burden of proof that the specified settings would result in the correct intended operation of the interrupting device. While that is a noble intention, the measurable proof of such a requirement is immense. The intent is that settings of the component be as specified at the conclusion of maintenance activities, whether those settings may have "drifted" since the prior maintenance or whether changes were made as part of the testing process.

Are electromechanical relays included in the "Verify that settings are as specified" maintenance activity in Table 1-1?

Verification of settings is an activity directed towards the application of protection related functions of microprocessor based relays. Electromechanical relays require calibration verification by voltage and/or current injection, and thus the settings are verified during calibration activity. In the example of a time-overcurrent relay, a minor deviation in time dial, versus the settings, may be acceptable as long as the relay calibration is within accepted tolerances at the injected current amplitudes. A major deviation may require further investigation, as it could indicate a problem with the relay or an incorrect relay style for the application.

The verification of phase current and voltage measurements by comparison to other quantities seems reasonable. How, though, can I verify residual or neutral currents, or 3V0 voltages, by comparison, when my system is closely balanced?

Since these inputs are verified at commissioning, maintenance verification requires ensuring that phase quantities are as expected and that 3IO and 3VO quantities appear equal to or close to 0. These quantities also may be verified by use of oscillographic records for connected microprocessor relays as recorded during system disturbances. Such records may compare to similar values recorded at other locations by other microprocessor relays for the same event, or compared to expected values (from short circuit studies) for known fault locations.

What does this Standard require for testing an auxiliary tripping relay?

Table 1 requires that a trip test must verify that the auxiliary tripping relay(s) and/or lockout relay(s) which are directly in a trip path from the protective relay to the interrupting device trip coil operate(s) electrically. Auxiliary outputs not in a trip path (i.e. annunciation or DME input) are not required, by this Standard, to be checked.

Do I have to perform a full end-to-end test of a Special Protection System?
No. All portions of the SPS need to be maintained, and the portions must overlap, but the overall SPS does not need to have a single end-to-end test. In other words it may be tested in piecemeal fashion provided all of the pieces are verified.

What about SPS interfaces between different entities or owners?
As in all of the Protection System requirements, SPS segments can be tested individually thus minimizing the need to accommodate complex maintenance schedules.

What do I have to do if I am using a phasor measurement unit (PMU) as part of a Protection System or Special Protection System?
Any Phasor Measurement Unit (PMU) function whose output is used in a Protection System or Special Protection System (as opposed to a monitoring task) must be verified as a component in a Protection System.

How do I maintain a Special Protection System or relay sensing for Centralized UFLS or UVLS Systems?
Since components of the SPS, UFLS, or UVLS are the same types of components as those in Protection Systems then these components should be maintained like similar components used for other Protection System functions. In many cases the devices for SPS, UFLS and UVLS are also used for other protective functions. The same maintenance activities apply with the exception that distributed systems (UFLS and UVLS) have fewer dc supply and control circuitry maintenance activity requirements.
For the testing of the output action, verification may be by breaker tripping, but may be verified in overlapping segments. For example an SPS that trips a remote circuit breaker might be tested by testing the various parts of the scheme in overlapping segments. Another method is to document the real-time tripping of an SPS scheme should that occur. Forced trip tests of circuit breakers (etc) that are a part of distributed UFLS or UVLS schemes are not required.

The established maximum allowable intervals do not align well with the scheduled outages for my power plant. Can I extend the maintenance to the next scheduled outage following the established maximum interval?
No. You must complete your maintenance within the established maximum allowable intervals in order to be compliant. You will need to schedule your maintenance during available outages to complete your maintenance as required, even if it means that you may do protective relay maintenance more frequently than the maximum allowable intervals. The maintenance intervals were selected with typical plant outages, among other things, in mind.

If I am unable to complete the maintenance as required due to a major natural disaster (hurricane, earthquake, etc), how will this affect my compliance with this Standard.
The Sanction Guidelines of the North American Electric Reliability Corporation effective January 15, 2008 provides that the Compliance Monitor will consider extenuating circumstances when considering any sanctions.

What if my observed testing results show a high incidence of out-of-tolerance relays, or, even worse, I am experiencing numerous relay misoperations due to the relays being out-of-tolerance?

The established maximum time intervals are mandatory only as a not-to-exceed limitation. The establishment of a maximum is measurable. But, any entity can choose to test some or all of their Protection System components more frequently (or, to express it differently, exceed the minimum requirements of the Standard). Particularly, if you find that the maximum intervals in the Standard do not achieve your expected level of performance, it is understandable that you would maintain the related equipment more frequently. A high incidence of relay Misoperations is in no one's best interest. The BES and an entity's bottom line both suffer.

We believe that the 3-month interval between inspections is unneccessary, why can we not perform these inspections twice per year?

The standard drafting team believes that routine monthly inspections are the norm. To align routine station inspections with other important inspections the 3-month interval was chosen. In lieu of station visits many activities can be accomplished with automated monitoring and alarming.

Our maintenance plan calls for us to perform routine protective relay tests every 3 years; if we are unable to achieve this schedule but we are able to complete the procedures in less than the Maximum Time Interval then are we in or out of compliance?

You are out of compliance. You must maintain your equipment to your stated intervals within your maintenance plan. The protective relays (and any Protection System component) cannot be tested at intervals that are longer than the maximum allowable interval stated in the Tables and yet you must conform to your own maintenance plan. Therefore you should design your maintenance plan such that it is not in conflict with the Minimum Activities and the Maximum Intervals. You then must maintain your equipment according to your maintenance plan. You will end up being compliant with both the Standard and your own plan.

Please provide a sample list of devices or systems that must be verified in a generator, generator step-up transformer, and generator connected station auxiliary transformer to meet the requirements of this Maintenance Standard.

Examples of typical devices and systems that may directly trip the generator, or trip through a lockout relay may include but are not necessarily limited to:

- Fault protective functions, including distance functions, voltage-restrained overcurrent functions, or voltage-controlled overcurrent functions
- Loss-of-field relays
- Volts-per-hertz relays
- Negative sequence overcurrent relays
- Over voltage and under voltage protection relays
- Stator-ground relays
- Communications-based Protection Systems such as transfer-trip systems

- Generator differential relays
- Reverse power relays
- Frequency relays
- Out-of-step relays
- Inadvertent energization protection
- Breaker failure protection

For generator step up or generator-connected station auxiliary transformers, operation of any of the following associated protective relays frequently would result in a trip of the generating unit and, as such, would be included in the program:

- Transformer differential relays
- Neutral overcurrent relay
- Phase overcurrent relays

Relays which trip breakers serving station auxiliary loads such as pumps, fans, or fuel handling equipment, etc., need not be included in the program even if the loss of the those loads could result in a trip of the generating unit. Furthermore, relays which provide protection to secondary unit substation (SUS) or low switchgear transformers and relays protecting other downstream plant electrical distribution system components are not included in the scope of this program even if a trip of these devices might eventually result in a trip of the generating unit. For example, a thermal overcurrent trip on the motor of a coal-conveyor belt could eventually lead to the tripping of the generator, but it does not cause the trip.

In the case where a plant does not have a generator connected station service transformer such that it is normally fed from a system connected station service transformer, is it still the drafting team's intent to exclude the protection systems for these system connected auxiliary transformers from scope even when the loss of the normal (system connected) station service transformer will result in a trip of a BES generating facility?

The SDT does not intend that the system-connected station auxiliary transformers be included in the Applicability. The generator-connected station service transformers are often connected to the generator bus directly without an interposing breaker; thus, the Protection Systems on these transformers will trip the generator as discussed in 4.2.5.1.

What is meant by "verify operation of the relay inputs and outputs that are essential to proper functioning of the Protection System?"

Any input or output (of the relay) that "affects the tripping" of the breaker is included in the scope of I/O of the relay to be verified. By "affects the tripping" one needs to realize that sometimes there are more Inputs and Outputs than simply the output to the trip coil. Many important protective functions include things like breaker fail initiation, zone timer initiation and sometimes even 52a/b contact inputs are needed for a protective relay to correctly operate.

Each input should be "picked up" or "turned on and off" and verified as changing state by the microprocessor of the relay. Each output should be "operated" or "closed and opened" from the microprocessor of the relay and the output should be verified to change state on the output terminals of the relay. One possible method of testing inputs of these relays is to "jumper" the needed ~~dcv~~dc voltage to the input and verify that the relay registered the change of state.

~~Electro-mechanical~~Electromechanical lock-out relays (86) and auxiliary tripping relays (94) (used to convey the tripping current to the trip coils) need to be electrically operated to prove the capability of the device to change state. These tests need to be accomplished at least every 6 years, unless PBM methodology is applied.

The contacts on the 86 or 94 that change state to pass on the trip current to a breaker trip coil need only be checked every twelve years with the control circuitry.

Other devices in the control circuitry that are used for other protective functions besides tripping (including, but not limited to, ~~electro-mechanical~~electromechanical breaker fail initiation relays) need only be verified with the control circuitry every twelve years.

8.2 Retention of Records

PRC-005-1 describes a reporting or auditing cycle of one year and retention of records for three years. However, with a three year retention cycle, the records of verification for a Protection System might be discarded before the next verification, leaving no record of what was done if a Misoperation or failure is to be analyzed.

PRC-005-2 corrects this by requiring:

The Transmission Owner, Generator Owner, and Distribution Provider shall each retain documentation of the two most recent performances of each distinct maintenance activity for the Protection System components, or to the previous scheduled (on-site) audit date, whichever is longer.

This requirement assures that the documentation shows that the interval between maintenance cycles correctly meets the maintenance interval limits. The requirement is actually alerting the industry to documentation requirements already implemented by audit teams. Evidence of compliance bookending the interval shows interval accomplished instead of proving only your planned interval.

8.2.1 Frequently Asked Questions:

Please use a specific example to demonstrate the data retention requirements.
The data retention requirements are intended to allow the availability of maintenance records to demonstrate that the time intervals in your maintenance plan were upheld. For example: "Company A" has a maintenance plan that requires its ~~electro-mechanical~~electromechanical protective relays be tested, for routine scheduled tests, every 3 calendar years with a maximum allowed grace period of an additional 18 months. This entity would be required to maintain its records of maintenance of its last two routine scheduled tests. Thus its test records would have a latest routine test as well as its previous routine test. The interval between tests is therefore provable to an auditor as being within "Company A's" stated maximum time interval of 4.5 years.

The intent is not to require three test results proving two time intervals, but rather have two test results proving the last interval. The drafting team contends that this minimizes storage requirements while still having minimum data available to demonstrate compliance with time intervals.

Realistically, the Standard is providing advanced notice of audit team documentation requests; this type of information has already been requested by auditors.

If an entity prefers to utilize Performance Based Maintenance then statistical data may well be retained for extended periods to assist with future adjustments in time intervals.

If an equipment item is replaced then the entity can restart the maintenance-time-interval-clock if desired, however the replacement of equipment does not remove any documentation requirements that would have been required to verify compliance with time-interval requirements; in other words do not discard maintenance data that goes to verify your work.

The retention of documentation for new and/or replaced equipment is all about proving that the maintenance intervals had been in compliance. For example, a long range plan of upgrades might lead an entity to ignore required maintenance; retaining the evidence of prior maintenance that existed before any retirements and upgrades proves compliance with the Standard.

What does this Maintenance Standard say about commissioning? Is it necessary to have documentation in your maintenance history of the completion of commission testing?
This Standard does not establish requirements for commission testing. Commission testing includes all testing activities necessary to conclude that a facility has been built in accordance with design. While a thorough commission testing program would include, either directly or indirectly, the verification of all those Protection System attributes addressed by the maintenance activities specified in the Tables of PRC-005-2, verification of the adequacy of initial installation necessitates the performance of testing and inspections that go well beyond these routine maintenance activities. For example, commission testing might set baselines for future tests; perform acceptance tests and/or warranty tests; utilize testing methods that are not generally done routinely like staged-fault-tests.
However, many of the Protection System attributes which are verified during commission testing are not subject to age related or service related degradation and need not be re-verified within an ongoing maintenance program. Example – it is not necessary to re-verify correct terminal strip wiring on an ongoing basis.

PRC-005-2 assumes that thorough commission testing was performed prior to a Protection System being placed in service. PRC-005-2 requires performance of maintenance activities that are deemed necessary to detect and correct plausible age and service related degradation of components such that a properly built and commission tested Protection System will continue to function as designed over its service life.

It should be noted that commission testing frequently is performed by a different organization than that which is responsible for the ongoing maintenance of the Protection System. Furthermore, the commission testing activities will not necessarily correlate directly with the maintenance activities required by the Standard. As such, it is very likely that commission testing records will deviate significantly from maintenance records in both form and content and

therefore, it is not necessary to maintain commission testing records within the maintenance program documentation.

Notwithstanding the differences in records, an entity would be wise to retain commissioning records to show a maintenance start date. (See below). An entity that requires that their commissioning tests have, at a minimum, the requirements of PRC-005-2 would help that entity prove time interval maximums by setting the initial time clock.

How do you determine the initial due date for maintenance?

The initial due date for maintenance should be based upon when a Protection System was tested. Alternatively, an entity may choose to use the date of completion of the commission testing of the Protection System component and the system was placed into service as the starting point in determining its first maintenance due dates. Whichever method is chosen, for newly installed Protection Systems the components should not be placed into service until minimum maintenance activities have taken place.

It is conceivable that there can be a (substantial) difference in time between the date of testing as compared to the date placed into service. The use of the "Calendar Year" language can help determine the next due date without too much concern about being non-compliant for missing test dates by a small amount (provided your dates are not already at the end of a year). However, if there is a substantial amount of time difference between testing and in-service dates then the testing date should be followed because it is the degradation of components that is the concern. While accuracy fluctuations may decrease when components are not energized there are cases when degradation can take place even though the device is not energized. Minimizing the time between commissioning tests and in-service dates will help.

If I miss two battery inspections four times out of 100 Protection System components on my transmission system, does that count as 2 percent or 8 percent when counting Violation Severity Level (VSL) for R3?

The entity failed to complete its scheduled program on two of its one hundred Protection System components which would equate to two percent for application to the VSL Table for Requirement R3.

How do I achieve a "grace period" without being out of compliance?

For the purposes of this example, concentrating on just unmonitored protective relays,– Table 1-1 specifies a maximum time interval (between the mandated maintenance activities) of 6 calendar years. Your plan must ensure that your unmonitored relays are tested at least once every 6 calendar years. You could, within your PSMP, require that your unmonitored relays be tested every 4 calendar years with a maximum allowable time extension of 18 calendar months. This allows an entity to have deadlines set for the auto-generation of work orders but still have the flexibility in scheduling complex work schedules. This also allows for that 18 calendar months to act as a buffer, a grace period, in the event of unforeseen events. You will note that this example of a maintenance plan interval has a planned time of 4 years; it also has a built-in time extension allowed within the PSMP and yet does not exceed the maximum time interval allowed by the Standard. So while there are no time extensions allowed beyond the Standard, an entity can still have substantial flexibility to maintain their Protection System components.

8.3 Basis for Table 1 Intervals

When developing the original *Protection System Maintenance – A Technical Reference* in 2007. the SPCTF collected all available data from Regional Entities (REs) on time intervals recommended for maintenance and test programs. The recommendations vary widely in categorization of relays, defined maintenance actions, and time intervals, precluding development of intervals by averaging. The SPCTF also reviewed the 2005 Report [2] of the IEEE Power System Relaying Committee Working Group I-17 (Transmission Relay System Performance Comparison). Review of the I-17 report shows data from a small number of utilities, with no company identification or means of investigating the significance of particular results.

To develop a solid current base of practice, the SPCTF surveyed its members regarding their maintenance intervals for electromechanical and microprocessor relays, and asked the members to also provide definitively-known data for other entities. The survey represented 470 GW of peak load, or 64% of the NERC peak load. Maintenance interval averages were compiled by weighting reported intervals according to the size (based on peak load) of the reporting utility. Thus, the averages more accurately represent practices for the large populations of Protection Systems used across the NERC regions.

The results of this survey with weighted averaging indicate maintenance intervals of 5 years for electromechanical or solid state relays, and 7 years for ~~un-monitored~~unmonitored microprocessor relays.

A number of utilities have extended maintenance intervals for microprocessor relays beyond 7 years, based on favorable experience with the particular products they have installed. To provide a technical basis for such extension, the SPCTF authors developed a recommendation of 10 years using the Markov modeling approach from [1] as summarized in Section 8.4. The results of this modeling depend on the completeness of self-testing or monitoring. Accordingly, this extended interval is allowed by Table 1 only when such relays are monitored as specified in the attributes of monitoring contained in Tables 1-1 through 1-5 and Table 2. Monitoring is capable of reporting Protection System health issues that are likely to affect performance within the 10 year time interval between verifications.

It is important to note that, according to modeling results, Protection System availability barely changes as the maintenance interval is varied below the 10-year mark. Thus, reducing the maintenance interval does not improve Protection System availability. With the assumptions of the model regarding how maintenance is carried out, reducing the maintenance interval actually degrades Protection System availability.

8.4 Basis for Extended Maintenance Intervals for Microprocessor Relays

Table 1 allows maximum verification intervals that are extended based on monitoring level. The industry has experience with self-monitoring microprocessor relays that leads to the Table 1 value for a monitored relay as explained in Section 8.3. To develop a basis for the maximum

interval for monitored relays in their *Protection System Maintenance – A Technical Reference*, the SPCTF used the methodology of Reference [1], which specifically addresses optimum routine maintenance intervals. The Markov modeling approach of [1] is judged to be valid for the design and typical failure modes of microprocessor relays.

The SPCTF authors ran test cases of the Markov model to calculate two key probability measures:

- Relay Unavailability - the probability that the relay is out of service due to failure or maintenance activity while the power system element to be protected is in service.
- Abnormal Unavailability - the probability that the relay is out of service due to failure or maintenance activity when a fault occurs, leading to failure to operate for the fault.

The parameter in the Markov model that defines self-monitoring capability is ST (for self test). ST = 0 if there is no self-monitoring; ST = 1 for full monitoring. Practical ST values are estimated to range from .75 to .95. The SPCTF simulation runs used constants in the Markov model that were the same as those used in [1] with the following exceptions:

Sn, Normal tripping operations per hour = 21600 (reciprocal of normal fault clearing time of 10 cycles)

Sb, Backup tripping operations per hour = 4320 (reciprocal of backup fault clearing time of 50 cycles)

Rc, Protected component repairs per hour = 0.125 (8 hours to restore the power system)

Rt, Relay routine tests per hour = 0.125 (8 hours to test a Protection System)

Rr, Relay repairs per hour = 0.08333 (12 hours to complete a Protection System repair after failure)

Experimental runs of the model showed low sensitivity of optimum maintenance interval to these parameter adjustments.

The resulting curves for Relay Unavailability and Abnormal Unavailability versus maintenance interval showed a broad minimum (optimum maintenance interval) in the vicinity of 10 years – the curve is flat, with no significant change in either unavailability value over the range of 9, 10, or 11 years. This was true even for a relay Mean Time between Failures (MTBF) of 50 years, much lower than MTBF values typically published for these relays. Also, the Markov modeling indicates that both the relay unavailability and abnormal unavailability actually become higher with more frequent testing. This shows that the time spent on these more frequent tests yields no failure discoveries that approach the negative impact of removing the relays from service and running the tests.

The PSMT SDT discussed the practical need for "time-interval extensions" or "grace periods" to allow for scheduling problems that resulted from any number of business contingencies. The time interval discussions also focused on the need to reflect industry norms surrounding Generator outage frequencies. Finally it was again noted that FERC Order 693 demanded maximum time intervals. "Maximum time intervals" by their very term negates any "time-interval extension" or "grace periods". To recognize the need to follow industry norms on Generator outage frequencies and accommodate a form of time-interval extension while still

following FERC Order 693 the Standard Drafting Team arrived at a 6 year interval for the ~~electro-mechanical~~electromechanical relay instead of the 5 year interval arrived at by the SPCTF. The PSMT SDT has followed the FERC directive for a *maximum* time interval and has determined that no extensions will be allowed. Six years has been set for the maximum time interval between manual maintenance activities. This maximum time interval also works well for maintenance cycles that have been in use in generator plants for decades.

For monitored relays, the PSMT SDT notes that the SPCTF called for 10 years as the interval between maintenance activities. This 10 year interval was chosen even though there was "…no significant change in unavailability value over the range of 9, 10, or 11 years. This was true even for a relay Mean Time between Failures (MTBF) of 50 years…" The Standard Drafting Team again sought to align maintenance activities with known successful practices and outage schedules. The Standard does not allow extensions on any component of the Protection System; thus the maximum allowed interval for these components has been set to12 years. Twelve years also fits well into the traditional maintenance cycles of both substations and generator plants.

Also of note is the Table's use of the term "Calendar" in the column for "Maximum Maintenance Interval". The PSMT SDT deemed it necessary to include the term "Calendar" to facilitate annual maintenance planning, scheduling and implementation. This need is the result of known occurrences of system requirements that could cause maintenance schedules to be missed by a few days or weeks. The PSMT SDT chose the term "Calendar" to preclude the need to have schedules be met to the day. An ~~electro-mechanical~~electromechanical protective relay that is maintained in year #1 need not be revisited until 6 years later (year #7). For example: a relay was maintained April 10, 2008; maintenance would need to be completed no later than December 31, 2014.

Though not a requirement of this Standard, to stay in line with many Compliance Enforcement Agencies audit processes an entity should define, within their own PSMP, the entity's use of terms like annual, calendar year, etc. Then, once this is within the PSMP the entity should abide by their chosen language.

9. Performance-Based Maintenance Process

In lieu of using the Table 1 intervals, a Performance-Based Maintenance process may be used to establish maintenance intervals (*PRC-005 Attachment A Criteria for a Performance-Based Protection System Maintenance Program*). A Performance-Based Maintenance process may justify longer maintenance intervals, or require shorter intervals relative to Table 1. In order to use a Performance-Based Maintenance process, the documented maintenance program must include records of repairs, adjustments, and corrections to covered Protection Systems in order to provide historical justification for intervals other than those established in Table 1. Furthermore, the asset owner must regularly analyze these records of corrective actions to develop a ranking of causes. Recurrent problems are to be highlighted, and remedial action plans are to be documented to mitigate or eliminate recurrent problems.

~~U~~Entiities with Performance-Based Maintenance track performance of Protection Systems, demonstrate how they analyze findings of performance failures and aberrations, and implement continuous improvement actions. Since no maintenance program can ever guarantee that no malfunction can possibly occur, documentation of a Performance-Based Maintenance program would serve the utility well in explaining to regulators and the public a Misoperation leading to a major system outage event.

A Performance-Based Maintenance program requires auditing processes like those included in widely used industrial quality systems (such as ***ISO 9001-2000, Quality management systems — Requirements;*** or applicable parts of the NIST Baldridge National Quality Program). The audits periodically evaluate:

- The completeness of the documented maintenance process
- Organizational knowledge of and adherence to the process
- Performance metrics and documentation of results
- Remediation of issues
- Demonstration of continuous improvement.

In order to opt into a Performance-Based Maintenance (PBM) program the asset owner must first sort the various Protection System components into population segments. Any population segment must be comprised of at least 60 individual units; if any asset owner opts for PBM but does not own 60 units to comprise a population then that asset owner may combine data from other asset owners until the needed 60 units is aggregated. Each population segment must be composed of a grouping of Protection Systems or components of a consistent design standard or particular model or type from a single manufacturer and subjected to similar environmental factors. For example: One segment cannot be comprised of both GE & Westinghouse electro-mechanical lock-out relays; likewise, one segment cannot be comprised of 60 GE lock-out relays, 30 of which are in a dirty environment and the remaining 30 from a clean environment. This PBM process cannot be applied to batteries but can be applied to all other components of a Protection System including (but not limited to) specific battery chargers, instrument transformers, trip coils and/or control circuitry (etc.).

9.1 Minimum Sample Size

Large Sample Size

An assumption that needs to be made when choosing a sample size is "the sampling distribution of the sample mean can be approximated by a normal probability distribution." The Central Limit Theorem states: "In selecting simple random samples of size *n* from a population, the sampling distribution of the sample mean *x* can be approximated by a normal probability distribution as the sample size becomes large." (Essentials of Statistics for Business and Economics, Anderson, Sweeney, Williams, 2003)

To use the Central Limit Theorem in statistics, the population size should be large. The references below are supplied to help define what is large.

"… whenever we are using a large simple random sample (rule of thumb: n>=30), the central limit theorem enables us to conclude that the sampling distribution of the sample mean can be approximated by a normal distribution." (Essentials of Statistics for Business and Economics, Anderson, Sweeney, Williams, 2003)

"If samples of size n, when n>=30, are drawn from any population with a mean *u* and a standard deviation σ, the sampling distribution of sample means approximates a normal distribution. The greater the sample size, the better the approximation." (Elementary Statistics - Picturing the World, Larson, Farber, 2003)

"The sample size is large (generally n>=30)… (Introduction to Statistics and Data Analysis - Second Edition, Peck, Olson, Devore, 2005)

"… the normal is often used as an approximation to the *t* distribution in a test of a null hypothesis about the mean of a normally distributed population when the population variance is estimated from a relatively large sample. A sample size exceeding 30 is often given as a minimal size in this connection." (Statistical Analysis for Business Decisions, Peters, Summers, 1968)

Error of Distribution Formula

Beyond the large sample size discussion above, a sample size requirement can be estimated using the bound on the Error of Distribution Formula when the expected result is of a "Pass/Fail" format and will be between 0 and 1.0.

The Error of Distribution Formula is:

$$B = z\sqrt{\frac{\pi(1-\pi)}{n}}$$

Where:

B = bound on the error of distribution (allowable error)

z = standard error

π = expected failure rate

n = sample size required

Solving for n provides:

$$n = \pi(1-\pi)\left(\frac{z}{B}\right)^2$$

Minimum Population Size to use Performance-Based Program

One entity's population of components should be large enough to represent a sizeable sample of a vendor's overall population of manufactured devices. For this reason the following assumptions are made:

B = 5%
z = 1.96 (This equates to a 95% confidence level)
π = 4%

Using the equation above, n=59.0.

Minimum Sample Size to evaluate Performance-Based Program
The number of components that should be included in a sample size for evaluation of the appropriate testing interval can be smaller because a lower confidence level is acceptable since the sample testing is repeated or updated annually. For this reason, the following assumptions are made:

B = 5%
z = 1.44 (85% confidence level)
π = 4%

Using the equation above, n=31.8.

Recommendation
Based on the above discussion, a sample size should be at least 30 to allow use of the equation mentioned. Using this and the results of the equation, the following numbers are recommended (and required within the Standard):

Minimum Population Size to use Performance-Based Maintenance Program = 60

Minimum Sample Size to evaluate Performance-Based Program = 30.

Once the population segment is defined then maintenance must begin within the intervals as outlined for the device described in the Tables 1-1 through 1-5. Time intervals can be lengthened provided the last year's worth of components tested (or the last 30 units maintained, whichever is more) had fewer than 4% countable events. It is notable that 4% is specifically chosen because an entity with a small population (60 units) would have to adjust its time intervals between maintenance if more than 1 countable event was found to have occurred during the last analysis period. A smaller percentage would require that entity to adjust the time interval between maintenance activities if even one unit is found out of tolerance or causes a Misoperation.

The minimum number of units that can be tested in any given year is 5% of the population. Note that this 5% threshold sets a practical limitation on total length of time between intervals at 20 years.

If at any time the number of countable events equals or exceeds 4% of the last year's tested components (or the last 30 units maintained, whichever is more) then the time period between manual maintenance activities must be decreased. There is a time limit on reaching the decreased time at which the countable events is less than 4%; this must be attained within three years.

This additional time period of three years to restore segment performance to <4% countable events is mandated to keep entities from "gaming the PBM system". It is believed that this requirement provides the economic disincentives to discourage asset owners from arbitrarily pushing the PBM time intervals out to up to 20 years without proper statistical data.

9.2 Frequently Asked Questions:

I'm a small entity and cannot aggregate a population of Protection System components to establish a segment required for a Performance-Based Protection System Maintenance Program. How can I utilize that opportunity?
Multiple asset owning entities may aggregate their individually owned populations of individual Protection System components to create a segment that crosses ownership boundaries. All entities participating in a joint program should have a single documented joint management process, with consistent Protection System Maintenance Programs (practices, maintenance intervals and criteria), for which the multiple owners are individually responsible with respect to the requirements of the Standard. The requirements established for Performance-Based Maintenance must be met for the overall aggregated program on an ongoing basis.

The aggregated population should reflect all factors that affect consistent performance across the population, including any relevant environmental factors such as geography, power-plant vs. substation, and weather conditions.

Can an owner go straight to a Performance-Based Maintenance program schedule, if they have previously gathered records?
Yes. An owner can go to a Performance-Based Maintenance program immediately. The owner will need to comply with the requirements of a Performance-Based Maintenance program as listed in the Standard. Gaps in the data collected will not be allowed; therefore, if an owner finds that a gap exists such that they cannot prove that they have collected the data as required for a Performance-Based Maintenance program then they will need to wait until they can prove compliance.

When establishing a Performance-Based Maintenance program, can I use test data from the device manufacturer, or industry survey results, as results to help establish a basis for my Performance-Based intervals?
No. You must use actual in-service test data for the components in the segment.

What types of misoperations or events are not considered countable events in the Performance-Based Protection System Maintenance (PBM) Program?
Countable events are intended to address conditions that are attributed to hardware failure or calibration failure; that is, conditions that reflect deteriorating performance of the component. These conditions include any condition where the device previously worked properly, then, due to changes within the device, malfunctioned or degraded to the point that re-calibration (to within the entity's tolerance) was required.
For this purpose of tracking hardware issues, human errors resulting in Protection System misoperations during system installation or maintenance activities are not considered countable

events. Examples of excluded human errors include relay setting errors, design errors, wiring errors, inadvertent tripping of devices during testing or installation, and misapplication of Protection System components. Examples of misapplication of Protection System components include wrong CT or PT tap position, protective relay function misapplication, and components not specified correctly for their installation. Obviously, if one is setting up relevant data about hardware failures then human failures should be eliminated from the hardware performance analysis.

One example of human-error is not pertinent data might be in the area of testing "86" lock-out relays (LOR). "Entity A" has two types of LOR's type "X" and type "Y"; they want to move into a performance based maintenance interval. They have 1000 of each type, so the population variables are met. During electrical trip testing of all of their various schemes over the initial six-year interval they find zero type "X" failures, but human error led to tripping a BES element 100 times; they find 100 type "Y" failures and had an additional 100 human-error caused tripping incidents. In this example the human-error caused misoperations should not be used to judge the performance of either type of LOR. Analysis of the data might lead "Entity A" to change time intervals. Type "X" LOR can be placed into extended time interval testing because of its low failure rate (zero failures) while Type "Y" would have to be tested more often than every 6 calendar years (100 failures divided by 1000 units exceeds the 4% tolerance level).

Certain types of Protection System component errors that cause misoperations are not considered countable events. Examples of excluded component errors include device malfunctions that are correctable by firmware upgrades and design errors that do not impact protection function.

What are some examples of methods of correcting segment perfomance for Performance-Based Maintenance?

There are a number of methods that may be useful for correcting segment performance for mal-performing segments in a Performance-Based Maintenance system. Some examples are listed below.

- The maximum allowable interval, as established by the Performance-Based Maintenance system, can be decreased. This may, however, be slow to correct the performance of the segment.
- Identifiable sub-groups of components within the established segment, which have been identified to be the mal-performing portion of the segment, can be broken out as an independent segment for target action. Each resulting segment must satisfy the minimum population requirements for a Performance-Based Maintenance program in order to remain within the program.
- Targeted corrective actions can be taken to correct frequently occurring problems. An example would be replacement of capacitors within electromechanical distance relays if bad capacitors were determined to be the cause of the mal-performance.
- Components within the mal-performing segment can be replaced with other components (electromechanical distance relays with microprocessor relays, for example) to remove the mal-performing segment.

If I find (and correct) a maintenance-correctable issue as a result of a misoperation investigation (Re: PRC-004), how does this affect my Performance-Based Maintenance program?

If you perform maintenance on a Protection System component for any reason (including as part of a PRC-004 required misoperation investigation/corrective action), the actions performed can count as a maintenance activity, and, if you desire, "reset the clock" on everything you've done. In a Performance-Based Maintenance program, you also need to record the maintenance-correctable issue with the relevant component group and use it in the analysis to determine your correct Performance-Based Maintenance interval for that component group. Note that "resetting the clock" should not be construed as interfering with an entity's routine testing schedule because the "clock-reset" would actually make for a decreased time interval by the time the next routine test schedule comes around.

For example a relay scheme, consisting of 4 relays, is tested on 1-1-11 and the PSMP has a time interval of 3 calendar years with an allowable extension of 1 calendar year. The relay would be due again for routine testing before the end of the year 2015. This mythical relay scheme has a misoperation on 6-1-12 that points to one of the four relays as bad. Investigation proves a bad relay and a new one is tested and installed in place of the original. This replacement relay actually could be retested before the end of the year 2016 (clock-reset) and not be out of compliance. This requires tracking maintenance by individual relays and is allowed. However, many companies schedule maintenance in other ways like by substation or by circuit breaker or by relay scheme. By these methods of tracking maintenance that "replaced relay" will be retested before the end of the year 2015. This is also acceptable. In no case was a particular relay tested beyond the PSMP of 4 years max, nor was the 6 year max of the Standard exceeded. The entity can reset the clock if they desire or the entity can continue with original schedules and, in effect, test even more frequently.

Why are batteries excluded from PBM? What about exclusion of batteries from condition based maintenance?

Batteries are the only element of a Protection System that is a perishable item with a shelf life. As a perishable item batteries require not only a constant float charge to maintain their freshness (charge), but periodic inspection to determine if there are problems associated with their aging process and testing to see if they are maintaining a charge or can still deliver their rated output as required.

Besides being perishable, a second unique feature of a battery that is unlike any other Protection System element is that a battery uses chemicals, metal alloys, plastics, welds, and bonds that must interact with each other to produce the constant dc source required for Protection Systems, undisturbed by ac system disturbances.

No type of battery manufactured today for Protection System application is free from problems that can only be detected over time by inspection and test. These problems can arise from variances in the manufacturing process, chemicals and alloys used in the construction of the individual cells, quality of welds and bonds to connect the components, the plastics used to make batteries and the cell forming process for the individual battery cells.

Other problems that require periodic inspection and testing can result from transportation from the factory to the job site, length of time before a charge is put on the battery, the method of

installation, the voltage level and duration of equalize charges, the float voltage level used, and the environment that the battery is installed in.

All of the above mentioned factors and several more not discussed here are beyond the control of the Functional Entities that want to use a Performance-Based Protection System Maintenance (PBM) program. These inherent variances in the aging process of a battery cell make establishment of a designated segment based on manufacturer and type of battery impossible.

The whole point of PBM is that if all variables are isolated then common aging and performance criteria would be the same. However, there are too many variables in the ~~electro-chemical~~electrochemical process to completely isolate all of the performance-changing criteria.

Similarly, Functional Entities that want to establish a condition-based maintenance program using the highest levels of monitoring~~;~~, resulting in the least amount of hands-on maintenance activity, ~~of the battery used in a station dc supply~~ cannot completely eliminate some periodic maintenance of the battery used in a station dc supply. Inspection of the battery is required on a Maximum Maintenance Interval listed in the tables due to the aging processes of station batteries. However, higher degrees of monitoring of a battery can eliminate the requirement for some periodic testing and some inspections (see Table 1-4).

Please provide an example of the calculations involved in extending maintenance time intervals using PBM.
Entity has 1000 GE-HEA lock-out relays; this is greater than the minimum sample requirement of 60.

They start out testing all of the relays within the prescribed Table requirements (6 year max) by testing the relays every 5 years. The entity's plan is to test 200 units per year; this is greater than the minimum sample size requirement of 30.

For the sake of example only the following will show 6 failures per year, reality may well have different numbers of failures every year. PBM requires annual assessment of failures found per units tested.

After the first year of tests the entity finds 6 failures in the 200 units tested. 6/200= 3% failure rate.

This entity is now allowed to extend the maintenance interval if they choose.

The entity chooses to extend the maintenance interval of this population segment out to 10 years.

This represents a rate of 100 units tested per year; entity selects 100 units to be tested in the following year.

After that year of testing these 100 units the entity again finds 6 failed units. 6/100= 6% failures.

This entity has now exceeded the acceptable failure rate for these devices and must accelerate testing of all of the units at a higher rate such that the failure rate is found to be less than 4% per year; the entity has three years to get this failure rate down to 4% or less (per year).

In response to the 6% failure rate, the entity decreases the testing interval to 8 years. This means that they will now test 125 units per year (1000/8). The entity has just two years left to get the test rate corrected.

After a year they again find 6 failures out of the 125 units tested. 6/125= 5% failures.

In response to the 5% failure rate, the entity decreases the testing interval to 7 years. This means that they will now test 143 units per year (1000/7). The entity has just one year left to get the test rate corrected.

After a year they again find 6 failures out of the 143 units tested. 6/143= 4.2% failures.

(Note that the entity has tried 5 years and they were under the 4% limit and they tried 7 years and they were over the 4% limit. They must be back at 4% failures or less in the next year so they might simply elect to go back to 5 years.)

Instead, in response to the 5% failure rate, the entity decreases the testing interval to 6 years. This means that they will now test 167 units per year (1000/6).

After a year they again find 6 failures out of the 167 units tested. 6/167= 3.6% failures.

Entity found that they could maintain the failure rate at no more than 4% failures by maintaining the testing interval at 6 years or less. Entity chose 6 year interval and effectively extended their TBM (5 years) program by 20%.

A note of practicality is that an entity will probably be in better shape to lengthen the intervals between tests if the failure rate is less than 2%. But the requirements allow for annual adjustments if the entity desires. As a matter of maintenance management, an ever-changing test rate (units tested / year) may be un-workable.

Note that the “5% of components” requirement effectively sets a practical limit of 20 year maximum PBM interval. Also of note is the “3 years” requirement; this is there to prevent an entity from “gaming the system”. An entity might arbitrarily extend time intervals from 6 years to 20 years. In the event that an entity finds a failure rate greater than 4% then the test rate must be accelerated such that within three years the failure rate must be brought back down to 4% or less.

Here is a table that demonstrates the values discussed:

Year #	Total Population (P)	Test Interval (I)	Units to be Tested (U= P/I)	# of Failures Found (F)	Failure Rate (=F/U)	Decision to Change Interval Yes or No	Interval Chosen

1	1000	5 yrs	200	6	3%	Yes	10 yrs
2	1000	10 yrs	100	6	6%	Yes	8 yrs
3	1000	8 yrs	125	6	5%	Yes	7 yrs
4	1000	7 yrs	143	6	4.2%	Yes	6 yrs
5	1000	6 yrs	167	6	3.6%	No	6 yrs

Please provide an example of the calculations involved in extending maintenance time intervals using PBM for control circuitry.

Note that the following example captures "Control Circuitry" as all of the trip paths associated with a particular trip coil of a circuit breaker. An entity is not restricted to this method of counting control circuits. Perhaps another method an entity would prefer would be to simply track every individual (parallel) trip path. Or perhaps another method would be to track all of the trip outputs from a specific (set) of relays protecting a specific element. Under the included definition of "Component":

The designation of what constitutes a control circuit component is very dependent upon how an entity performs and tracks the testing of the control circuitry. Some entities test their control circuits on a breaker basis whereas others test their circuitry on a local zone of protection basis. Thus, entities are allowed the latitude to designate their own definitions of control circuit components. Another example of where the entity has some discretion on determining what constitutes a single component is the voltage and current sensing devices, where the entity may choose either to designate a full three-phase set of such devices or a single device as a single component.

And in Attachment A (PBM) the definition of Segment:

Segment – *Protection Systems or components of a consistent design standard, or a particular model or type from a single manufacturer that typically share other common elements. Consistent performance is expected across the entire population of a segment. A segment must contain at least sixty (60) individual components.*

Example:

Entity has 1000 circuit breakers, all of which have two trip coils for a total of 2000 trip coils; if all circuitry was designed and built with a consistent (internal entity) standard then this is greater than the minimum sample requirement of 60.

For the sake of further example the following facts are given:

Half of all relay panels (500) were built 40 years ago by an outside contractor, consisted of asbestos wrapped 600V-insulation panel wiring and the cables exiting the control house are THHN pulled in conduit direct to exactly half of all of the various circuit breakers. All of the relay panels and cable pulls were built with consistent standards and consistent performance standard expectations within the segment (which is greater than 60). Each relay panel has redundant microprocessor (MPC) relays (retrofitted); each MPC relay supplies an individual trip output to each of the two trip coils of the assigned circuit breaker.

Approximately 35 years ago the entity developed their own internal construction crew and now builds all of their own relay panels from parts supplied from vendors that meet the entity's specifications, including SIS 600V insulation wiring and copper-sheathed cabling within the direct conduits to circuit breakers. The construction crew uses consistent standards in the construction. This newer segment of their Control Circuitry population is different than the original segment, consistent (standards, construction and performance expectations) within the new segment and constitutes the remainder of the entity's population, (another 500 panels and the cabling to the remaining 500 circuit breakers). Each relay panel has redundant

microprocessor (MPC) relays; each MPC relay supplies an individual trip output to each of the two trip coils of the assigned circuit breaker. Every trip path in this newer segment has a device that monitors the voltage directly across the trip contacts of the MPC relays and alarms via RTU and SCADA to the Operations Control room. This monitoring device, when not in alarm, demonstrates continuity all the way through the trip coil, cabling and wiring back to the trip contacts of the MPC relay.

The entity is tracking 2000 trip coils (each consisting of multiple trip paths) in each of these two segments. But half of all of the trip paths are monitored, therefore the trip paths are continuously tested and the circuit will alarm when there is a failure; these alarms have to be verified every 12 years for correct operation.

The entity now has 1000 trip coils (and associated trip paths) remaining that they have elected to count as control circuits. The entity has instituted a process that requires the verification of every trip path to each trip coil (one unit), including the electrical activation of the trip coil. (The entity notes that the trip coils will have to be tripped electrically more often than the trip path verification and is taking care of this activity through other documentation of real-time fault operations.)

They start out testing all of the trip coil circuits within the prescribed Table requirements (12 year max) by testing the trip circuits every 10 years. The entity's plan is to test 100 units per year; this is greater than the minimum sample size requirement of 30.

For the sake of example only the following will show 3 failures per year, reality may well have different numbers of failures every year. PBM requires annual assessment of failures found per units tested.

After the first year of tests the entity finds 3 failures in the 100 units tested. 3/100= 3% failure rate.

This entity is now allowed to extend the maintenance interval if they choose.

The entity chooses to extend the maintenance interval of this population segment out to 20 years.

This represents a rate of 50 units tested per year; entity selects 50 units to be tested in the following year.

After that year of testing these 50 units the entity again finds 3 failed units. 3/50= 6% failures.

This entity has now exceeded the acceptable failure rate for these devices and must accelerate testing of all of the units at a higher rate such that the failure rate is found to be less than 4% per year; the entity has three years to get this failure rate down to 4% or less (per year).

In response to the 6% failure rate, the entity decreases the testing interval to 16 years. This means that they will now test 63 units per year (1000/16). The entity has just two years left to get the test rate corrected.

After a year they again find 3 failures out of the 63 units tested. 3/63= 4.76% failures.

In response to the >4% failure rate, the entity decreases the testing interval to 14 years. This means that they will now test 72 units per year (1000/14). The entity has just one year left to get the test rate corrected.

After a year they again find 3 failures out of the 72 units tested. 3/72= 4.2% failures.

(Note that the entity has tried 10 years and they were under the 4% limit and they tried 14 years and they were over the 4% limit. They must be back at 4% failures or less in the next year so they might simply elect to go back to 10 years.)

Instead, in response to the 4.2% failure rate, the entity decreases the testing interval to 12 years. This means that they will now test 84 units per year (1000/12).

After a year they again find 3 failures out of the 84 units tested. 3/84= 3.6% failures.

Entity found that they could maintain the failure rate at no more than 4% failures by maintaining the testing interval at 12 years or less. Entity chose 12 year interval and effectively extended their TBM (10 years) program by 20%.

A note of practicality is that an entity will probably be in better shape to lengthen the intervals between tests if the failure rate is less than 2%. But the requirements allow for annual adjustments if the entity desires. As a matter of maintenance management, an ever-changing test rate (units tested / year) may be un-workable.

Note that the "5% of components" requirement effectively sets a practical limit of 20 year maximum PBM interval. Also of note is the "3 years" requirement; this is there to prevent an entity from "gaming the system". An entity might arbitrarily extend time intervals from 6 years to 20 years. In the event that an entity finds a failure rate greater than 4% then the test rate must be accelerated such that within three years the failure rate must be brought back down to 4% or less.

Here is a table that demonstrates the values discussed:

Year #	Total Population (P)	Test Interval (I)	Units to be Tested (U= P/I)	# of Failures Found (F)	Failure Rate (=F/U)	Decision to Change Interval Yes or No	Interval Chosen
1	1000	10 yrs	100	3	3%	Yes	20 yrs
2	1000	20 yrs	50	3	6%	Yes	16yrs
3	1000	16 yrs	63	3	4.8%	Yes	14 yrs
4	1000	14 yrs	72	3	4.2%	Yes	12 yrs
5	1000	12 yrs	84	3	3.6%	No	12 yrs

Please provide an example of the calculations involved in extending maintenance time intervals using PBM for voltage and current sensing devices.

Note that the following example captures "voltage and current inputs to the protective relays" as all of the various current transformer and potential transformer signals associated with a particular set of relays used for protection of a specific element. This entity calls this set of protective relays a "Relay Scheme". Thus this entity chooses to count PT and CT signals as a group instead of individually tracking maintenance activities to specific bushing CT's or specific PT's. An entity is not restricted to this method of counting voltage and current devices, signals and paths. Perhaps another method an entity would prefer would be to simply track every individual PT and CT. Note that a generation maintenance group may well select the latter because they may elect to perform routine off-line tests during generator outages whereas a transmission maintenance group might create a process that utilizes real-time system values measured at the relays. Under the included definition of "Component":

The designation of what constitutes a control circuit component is very dependent upon how an entity performs and tracks the testing of the control circuitry. Some entities test their control circuits on a breaker basis whereas others test their circuitry on a local zone of protection basis. Thus, entities are allowed the latitude to designate their own definitions of control circuit components. Another example of where the entity has some discretion on determining what constitutes a single component is the voltage and current sensing devices, where the entity may choose either to designate a full three-phase set of such devices or a single device as a single component.

And in Attachment A (PBM) the definition of Segment:

Segment – *Protection Systems or components of a consistent design standard, or a particular model or type from a single manufacturer that typically share other common elements. Consistent performance is expected across the entire population of a segment. A segment must contain at least sixty (60) individual components.*

Example:

Entity has 2000 "Relay Schemes", all of which have three current signals supplied from bushing CT's and three voltage signals supplied from substation bus PT's. All cabling and circuitry was designed and built with a consistent (internal entity) standard and this population is greater than the minimum sample requirement of 60.

For the sake of further example the following facts are given:

Half of all relay schemes (1000) are supplied with current signals from ANSI STD C800 bushing CT's and voltage signals from PT's built by ACME Electric MFR CO. All of the relay panels and cable pulls were built with consistent standards and consistent performance standard expectations exist for the consistent wiring, cabling and instrument transformers within the segment (which is greater than 60).

The other half of the entity's relay schemes have MPC relays with additional monitoring built-in that compare DNP values of voltages and currents (or Watts and VARs) as interpreted by the MPC relays and alarm for an entity-accepted tolerance level of accuracy. This newer segment of their "Voltage and Current Sensing" population is different than the original segment, consistent

(standards, construction and performance expectations) within the new segment and constitutes the remainder of the entity's population.

The entity is tracking many thousands of voltage and current signals within 2000 relay schemes (each consisting of multiple voltage and current signals) in each of these two segments. But half of all of the relay schemes voltage and current signals are monitored, therefore the voltage and current signals are continuously tested and the circuit will alarm when there is a failure; these alarms have to be verified every 12 years for correct operation.
The entity now has 1000 relay schemes worth of voltage and current signals remaining that they have elected to count within their relay schemes designation. The entity has instituted a process that requires the verification of these voltage and current signals within each relay scheme (one unit).
(Please note - a problem discovered with a current or voltage signal found at the relay could be caused by anything from the relay all the way to the signal source itself. Having many sources of problems can easily increase failure rates beyond the rate of failures of just one item (for example just PT's). It is the intent of the SDT to minimize failure rates of all of the equipment to an acceptable level thus any failure of any item that gets the signal from source to relay is counted. It is for this reason that the SDT chose to set the boundary at the ability of the signal to be delivered all the way to the relay.)

The entity will start out measuring all of the relay scheme voltage and currents at the individual relays within the prescribed Table requirements (12 year max) by measuring the voltage and current values every 10 years. The entity's plan is to test 100 units per year; this is greater than the minimum sample size requirement of 30.

For the sake of example only the following will show 3 failures per year, reality may well have different numbers of failures every year. PBM requires annual assessment of failures found per units tested.

After the first year of tests the entity finds 3 failures in the 100 units tested. 3/100= 3% failure rate.

This entity is now allowed to extend the maintenance interval if they choose.

The entity chooses to extend the maintenance interval of this population segment out to 20 years.

This represents a rate of 50 units tested per year; entity selects 50 units to be tested in the following year.

After that year of testing these 50 units the entity again finds 3 failed units. 3/50= 6% failures.

This entity has now exceeded the acceptable failure rate for these devices and must accelerate testing of all of the units at a higher rate such that the failure rate is found to be less than 4% per year; the entity has three years to get this failure rate down to 4% or less (per year).

In response to the 6% failure rate, the entity decreases the testing interval to 16 years. This means that they will now test 63 units per year (1000/16). The entity has just two years left to get the test rate corrected.

After a year they again find 3 failures out of the 63 units tested. 3/63= 4.76% failures.

In response to the >4% failure rate, the entity decreases the testing interval to 14 years. This means that they will now test 72 units per year (1000/14). The entity has just one year left to get the test rate corrected.

After a year they again find 3 failures out of the 72 units tested. 3/72= 4.2% failures.

(Note that the entity has tried 10 years and they were under the 4% limit and they tried 14 years and they were over the 4% limit. They must be back at 4% failures or less in the next year so they might simply elect to go back to 10 years.)

Instead, in response to the 4.2% failure rate, the entity decreases the testing interval to 12 years. This means that they will now test 84 units per year (1000/12).

After a year they again find 3 failures out of the 84 units tested. 3/84= 3.6% failures.

Entity found that they could maintain the failure rate at no more than 4% failures by maintaining the testing interval at 12 years or less. Entity chose 12 year interval and effectively extended their TBM (10 years) program by 20%.

A note of practicality is that an entity will probably be in better shape to lengthen the intervals between tests if the failure rate is less than 2%. But the requirements allow for annual adjustments if the entity desires. As a matter of maintenance management, an ever-changing test rate (units tested / year) may be un-workable.

Note that the "5% of components" requirement effectively sets a practical limit of 20 year maximum PBM interval. Also of note is the "3 years" requirement; this is there to prevent an entity from "gaming the system". An entity might arbitrarily extend time intervals from 6 years to 20 years. In the event that an entity finds a failure rate greater than 4% then the test rate must be accelerated such that within three years the failure rate must be brought back down to 4% or less.

Here is a table that demonstrates the values discussed:

Year #	Total Population (P)	Test Interval (I)	Units to be Tested (U= P/I)	# of Failures Found (F)	Failure Rate (=F/U)	Decision to Change Interval Yes or No	Interval Chosen
1	1000	10 yrs	100	3	3%	Yes	20 yrs
2	1000	20 yrs	50	3	6%	Yes	16yrs
3	1000	16 yrs	63	3	4.8%	Yes	14 yrs
4	1000	14 yrs	72	3	4.2%	Yes	12 yrs
5	1000	12 yrs	84	3	3.6%	No	12 yrs

10. Overlapping the Verification of Sections of the Protection System

Tables 1-1 through 1-5 require that every Protection System component be periodically verified. One approach, but not the only method, is to test the entire protection scheme as a unit, from the secondary windings of voltage and current sources to breaker tripping. For practical ongoing verification, sections of the Protection System may be tested or monitored individually. The boundaries of the verified sections must overlap to ensure that there are no gaps in the verification. See Appendix A of this Supplementary Reference for additional discussion on this topic.

All of the methodologies expressed within this report may be combined by an entity, as appropriate, to establish and operate a maintenance program. For example, a Protection System may be divided into multiple overlapping sections with a different maintenance methodology for each section:

- Time-based maintenance with appropriate maximum verification intervals for categories of equipment as given in the Tables 1-1 through 1-5;
- Monitoring as described in Tables 1-1 through 1-5;
- A Performance-Based Maintenance program as described in Section 9 above or Attachment A of the Standard;
- Opportunistic verification using analysis of fault records as described in Section 11

10.1 Frequently Asked Question:

My system has alarms that are gathered once daily through an auto-polling system; this is not really a conventional SCADA system but does it meet the Table 1 requirements for inclusion as a monitored system?
Yes, provided the auto-polling that gathers the alarms reports those alarms to a location where the action can be initiated to correct the maintenance-correctable issue. This location does not have to be the location of the engineer or the technician that will eventually repair the problem, but rather a location where the action can be initiated.

11. Monitoring by Analysis of Fault Records

Many users of microprocessor relays retrieve fault event records and oscillographic records by data communications after a fault. They analyze the data closely if there has been an apparent misoperation, as NERC Standards require. Some advanced users have commissioned automatic fault record processing systems that gather and archive the data. They search for evidence of component failures or setting problems hidden behind an operation whose overall outcome seems to be correct. The relay data may be augmented with independently captured digital fault recorder (DFR) data retrieved for the same event.

Fault data analysis comprises a legitimate CBM program that is capable of reducing the need for a manual time-interval based check on Protection Systems whose operations are analyzed. Even electromechanical Protection Systems instrumented with DFR channels may achieve some CBM benefit. The completeness of the verification then depends on the number and variety of faults in the vicinity of the relay that produce relay response records, and the specific data captured.

A typical fault record will verify particular parts of certain Protection Systems in the vicinity of the fault. For a given Protection System installation, it may or may not be possible to gather within a reasonable amount of time an ensemble of internal and external fault records that completely verify the Protection System.

For example, fault records may verify that the particular relays that tripped are able to trip via the control circuit path that was specifically used to clear that fault. A relay or DFR record may

indicate correct operation of the protection communications channel. Furthermore, other nearby Protection Systems may verify that they restrain from tripping for a fault just outside their respective zones of protection. The ensemble of internal fault and nearby external fault event data can verify major portions of the Protection System, and reset the time clock for the Table 1 testing intervals for the verified components only.

What can be shown from the records of one operation is very specific and limited. In a panel with multiple relays, only the specific relay(s) whose operation can be observed without ambiguity should be used. Be careful about using fault response data to verify that settings or calibration are correct. Unless records have been captured for multiple faults close to either side of a setting boundary, setting or calibration could still be incorrect.
PMU data, much like DME data, can be utilized to prove various components of the Protection System. Obviously, care must be taken to attribute proof only to the parts of a Protection System that can actually be proven using the PMU or DME data.

If fault record data is used to show that portions or all of a Protection System have been verified to meet Table 1 requirements, the owner must retain the fault records used, and the maintenance related conclusions drawn from this data and used to defer Table 1 tests, for at least the retention time interval given in Section 8.2.

11.1 Frequently Asked Question:

I use my protective relays for fault and disturbance recording, collecting oscillographic records and event records via communications for fault analysis to meet NERC and DME requirements. What are the maintenance requirements for the relays?
For relays used only as disturbance monitoring equipment, the NERC Standard PRC-018-1 R3 & R6 states the maintenance requirements, and is being addressed by a Standards activity that is revising PRC-002-1 and PRC-018-1. For protective relays “that are designed to provide protection for the BES,” this Standard applies, even if they also perform DME functions.

12. Importance of Relay Settings in Maintenance Programs

In manual testing programs, many utilities depend on pickup value or zone boundary tests to show that the relays have correct settings and calibration. Microprocessor relays, by contrast, provide the means for continuously monitoring measurement accuracy. Furthermore, the relay digitizes inputs from one set of signals to perform all measurement functions in a single self-monitoring microprocessor system. These relays do not require testing or calibration of each setting.

However, incorrect settings may be a bigger risk with microprocessor relays than with older relays. Some microprocessor relays have hundreds or thousands of settings, many of which are critical to Protection System performance.

Monitoring does not check measuring element settings. Analysis of fault records may or may not reveal setting problems. To minimize risk of setting errors after commissioning, the user should enforce strict settings data base management, with reconfirmation (manual or automatic) that the installed settings are correct whenever maintenance activity might have changed them. For background and guidance, see [5~~].~~] in References.

Table 1 requires that settings must be verified to be as specified. The reason for this requirement is simple. With legacy relays (non-microprocessor protective relays) it is necessary to know the value of the intended setting in order to test, adjust and calibrate the relay. Proving that the relay works per specified setting was the de facto procedure. However, with the advanced microprocessor relays it is possible to change relay settings for the purpose of verifying specific functions and then neglect to return the settings to the specified values. While there is no specific

requirement to maintain a settings management process there remains a need to verify that the settings left in the relay are the intended, specified settings. This need may manifest itself after any of the following:

- One or more settings are changed for any reason.
- A relay fails and is repaired or replaced with another unit.
- A relay is upgraded with a new firmware version.

12.1 Frequently Asked Questions:

How do I approach testing when I have to upgrade firmware of a microprocessor relay?
The entity should ensure that the relay continues to function properly after implementation of firmware changes. Some entities may have a R&D department that might routinely run acceptance tests on devices with firmware upgrades before allowing the upgrade to be installed. Other entities may rely upon the vigorous testing of the firmware OEM. An entity has the latitude to install devices and/or programming that they believe will perform to their satisfaction. If an entity should choose to perform the maintenance activities specified in the Tables following a firmware upgrade then they may, if they choose, reset the time clock on that set of maintenance activities so that they would not have to repeat the maintenance on its regularly scheduled cycle. (However, for simplicity in maintenance schedules, some entities may choose to not reset this time clock; it is merely a suggested option.)

If I upgrade my old relays then do I have to maintain my previous equipment maintenance documentation?
If an equipment item is repaired or replaced then the entity can restart the maintenance-activity-time-interval-clock if desired, however the replacement of equipment does not remove any documentation requirements. The requirements in the Standard are intended to ensure that an entity has a maintenance plan and that the entity adheres to minimum activities and maximum time intervals. The documentation requirements are intended to help an entity demonstrate compliance. For example, saving the dates and records of the last two maintenance activities is intended to demonstrate compliance with the interval. Therefore, if you upgrade or replace equipment then you still must maintain the documentation for the previous equipment, thus demonstrating compliance with the time interval requirement prior to the replacement action.

We have a number of installations where we have changed our Protection System components. Some of the changes were upgrades, but others were simply system rating changes that merely required taking relays "out-of-service". What are our responsibilities when it comes to "out-of-service" devices?
Assuming that your system up-rates, upgrades and overall changes meet any and all other requirements and standards then the requirements of PRC-005-2 are simple – if the Protection System component performs a Protection System function then it must be maintained. If the component no longer performs Protection System functions then it does not require maintenance activities under the Tables of PRC-005-2. While many entities might physically remove a component that is no longer needed there is no requirement in PRC-005-2 to remove such component(s). Obviously, prudence would

dictate that an "out-of-service" device is truly made inactive. There are no record requirements listed in PRC-005-2 for Protection System components not used.

While performing relay testing of a protective device on our Bulk Electric System it was discovered that the protective device being tested was either broken or out of calibration. Does this satisfy the relay testing requirement even though the protective device tested bad, and may be unable to be placed back into service?
Yes, PRC-005-2 requires entities to perform relay testing on protective devices on a given maintenance cycle interval. By performing this testing, the entity has satisfied PRC-005-2 requirement although the protective device may be unable to be returned to service under normal calibration adjustments. R3 states (the entity must):

R3. Each Transmission Owner, Generator Owner, and Distribution Provider shall implement and follow its PSMP and initiate resolution of any identified maintenance correctable issues.

Also, when a failure occurs in a Protection System, power system security ~~maybe~~may be comprised, and notification of the failure must be conducted in accordance with relevant NERC Standards.

If I show the protective device out of service while it is being repaired then can I add it back as a new protective device when it returns? If not, my relay testing history would show that I was out of compliance for the last maintenance cycle.
The maintenance and testing requirements (R3) (in essence) state "…shall implement and follow its PSMP and initiate resolution of any identified maintenance correctable issues..." The type of corrective activity is not stated; however it could include repairs or replacements.

Your documentation requirements will increase, of course, to demonstrate that your device tested bad and had corrective actions initiated. Your regional entity could very well ask for documentation showing status of your corrective actions.

13. Self-Monitoring Capabilities and Limitations

Microprocessor relay proponents have cited the self-monitoring capabilities of these products for nearly 20 years. Theoretically, any element that is monitored does not need a periodic manual test. A problem today is that the community of manufacturers and users has not created clear documentation of exactly what is and is not monitored. Some unmonitored but critical elements are buried in installed systems that are described as self-monitoring.

To utilize the extended time intervals allowed by monitoring the user must document that the monitoring attributes of the device match the minimum requirements listed in the Table 1.
Until users are able to document how all parts of a system which are required for the protective functions are monitored or verified (with help from manufacturers), they must continue with the unmonitored intervals established in Table 1.

Going forward, manufacturers and users can develop mappings of the monitoring within relays, and monitoring coverage by the relay of user circuits connected to the relay terminals.

To enable the use of the most extensive monitoring (and never again have a hands-on maintenance requirement), the manufacturers of the microprocessor-based self-monitoring components in the Protection System should publish for the user a document or map that shows:

- How all internal elements of the product are monitored for any failure that could impact Protection System performance.
- Which connected circuits are monitored by checks implemented within the product; how to connect and set the product to assure monitoring of these connected circuits; and what circuits or potential problems are not monitored.

With this information in hand, the user can document monitoring for some or all sections by:

- Presenting or referencing the product manufacturer's documents.
- Explaining in a system design document the mapping of how every component and circuit that is critical to protection is monitored by the microprocessor product(s) or by other design features.
- Extending the monitoring to include the alarm transmission facilities through which failures are reported within a given time frame to allocate where action can be taken to initiate resolution of the alarm attributed to a maintenance correctable issue, so that failures of monitoring or alarming systems also lead to alarms and action.
- Documenting the plans for verification of any unmonitored components according to the requirements of Table 1.

13.1 Frequently Asked Question:

I can't figure out how to demonstrate compliance with the requirements for the highest level of monitoring of Protection Systems. Why does this Maintenance Standard describe a maintenance program approach I cannot achieve?

Demonstrating compliance with the requirements for the highest level of monitoring any particular component of Protection Systems is likely to be very involved, and may include detailed manufacturer documentation of complete internal monitoring within a device, comprehensive design drawing reviews, and other detailed documentation. This Standard does not presume to specify what documentation must be developed; only that it must be documented.

There may actually be some equipment available that is capable of meeting these highest levels of monitoring criteria, in which case it may be maintained according to the highest level of monitoring shown on the Tables. However, even if there is no equipment available today that can meet this level of monitoring; the Standard establishes the necessary requirements for when such equipment becomes available.

By creating a roadmap for development, this provision makes the Standard technology-neutral. The Standard Drafting Team wants to avoid the need to revise the Standard in a few years to accommodate technology advances that ~~are maybe~~may be coming to the industry.

14. Notification of Protection System Failures

When a failure occurs in a Protection System, power system security may be compromised, and notification of the failure must be conducted in accordance with relevant NERC Standard(s). Knowledge of the failure may impact the system operator's decisions on acceptable loading conditions.

This formal reporting of the failure and repair status to the system operator by the Protection System owner also encourages the system owner to execute repairs as rapidly as possible. In some cases, a microprocessor relay or carrier set can be replaced in hours; wiring termination failures may be repaired in a similar time frame. On the other hand, a component in an electromechanical or early-generation electronic relay may be difficult to find and may hold up repair for weeks. In some situations, the owner may have to resort to a temporary protection panel, or complete panel replacement.

15. Maintenance Activities

Some specific maintenance activities are a requirement to ensure reliability. An example would be that a BES entity could be prudent in its protective relay maintenance but if its battery maintenance program is lacking then reliability could still suffer. The NERC glossary outlines a Protection System as containing specific components. PRC-005-2 requires specific maintenance activities be accomplished within a specific time interval. As noted previously, higher technology equipment can contain integral monitoring capability that actually performs maintenance verification activities routinely and often; therefore *manual intervention* to perform certain activities on these type components may not be needed.

15.1 Protective Relays (Table 1-1)

These relays are defined as the devices that receive the input signal from the current and voltage sensing devices and are used to isolate a faulted element of the BES. Devices that sense thermal, vibration, seismic, pressure, gas or any other non-electrical inputs are excluded.

Non-microprocessor based equipment is treated differently than microprocessor based equipment in the following ways, the relays should meet the asset owners' tolerances.

- Non-microprocessor devices must be tested with voltage and/or current applied to the device.
- Microprocessor devices may be tested through the integral testing of the device.
    - There is no specific protective relay commissioning test or relay routine test mandated.
    - There is no specific documentation mandated.

15.1.1 Frequently Asked Question:

What calibration tolerance should be applied on electromechanical relays?
Each entity establishes their own acceptable tolerances when applying protective relaying on their system. For some Protection System components, adjustment is required to bring measurement accuracy within the parameters established by the asset owner based on the specific application of the component. A calibration failure is the result if testing finds the specified parameters to be out of tolerance.

15.2 Voltage & Current Sensing Devices (Table 1-3)

These are the current and voltage sensing devices, usually known as instrument transformers. There is presently a technology available (fiber-optic Hall-effect) that does not utilize conventional transformer technology; these devices and other technologies that produce quantities that represent the primary values of voltage and current are considered to be a type of voltage and current sensing devices included in this Standard.

The intent of the maintenance activity is to verify the input to the protective relay from the device that produces the current or voltage signal sample.

There is no specific test mandated for these components. The important thing about these signals is to know that the expected output from these components actually reaches the protective relay. Therefore, the proof of the proper operation of these components also demonstrates the integrity of the wiring (or other medium used to convey the signal) from the current and voltage sensing device all the way to the protective relay. The following observations apply.

- There is no specific ratio test, routine test or commissioning test mandated.
- There is no specific documentation mandated.
- It is required that the signal be present at the relay.
- This expectation can be arrived at from any of a number of means; by calculation, by comparison to other circuits, by commissioning tests, by thorough inspection, or by any means needed to verify the circuit meets the asset owner's Protection System maintenance program.
- An example of testing might be a saturation test of a CT with the test values applied at the relay panel; this therefore tests the CT as well as the wiring from the relay all the back to the CT.
- Another possible test is to measure the signal from the voltage and/or current sensing devices, during load conditions, at the input to the relay.
- Another example of testing the various voltage and/or current sensing devices is to query the microprocessor relay for the real-time loading; this can then be compared to other devices to verify the quantities applied to this relay. Since the input devices have supplied the proper values to the protective relay then the verification activity has been satisfied.

Thus event reports (and oscillographs) can be used to verify that the voltage and current sensing devices are performing satisfactorily.

- Still another method is to measure total watts and vars around the entire bus; this should add up to zero watts and zero vars thus proving the voltage and/or current sensing devices system throughout the bus.
- Another method for proving the voltage and/or current sensing devices is to complete commissioning tests on all of the transformers, cabling, fuses and wiring.
- Any other methods that provide documentation that the expected transformer values as applied to the inputs to the protective relays are acceptable.

15.2.1 Frequently Asked Questions:

What is meant by "…verify the current and voltage circuit inputs from the voltage and current sensing devices to the protective relays …" Do we need to perform ratio, polarity and saturation tests every few years?

No. You must verify that the protective relay is receiving the expected values from the voltage and current sensing devices (typically voltage and current transformers). This can be as difficult as is proposed by the question (with additional testing on the cabling and substation wiring to ensure that the values arrive at the relays); or simplicity can be achieved by other verification methods. While some examples follow, these are not intended to represent an all-inclusive list; technology advances and ingenuity should not be excluded from making comparisons and verifications:

- Compare the secondary values, at the relay, to a metering circuit, fed by different current transformers, monitoring the same line as the questioned relay circuit.
- Compare the individual phase secondary values at the relay panel (with additional testing on the panel wiring to ensure that the values arrive at those relays) with the other phases, and verify that residual currents are within expected bounds
- Observe all three phase currents and the residual current at the relay panel with an oscilloscope, observing comparable magnitudes and proper phase relationship, with additional testing on the panel wiring to ensure that the values arrive at the relays.
- Compare the values, as determined by the questioned relay (such as, but not limited to, a query to the microprocessor relay), to another protective relay monitoring the same line, with currents supplied by different CT's.
- Compare the secondary values, at the relay with values measured by test instruments (such as, but not limited to multi-meters, voltmeter, clamp-on ammeters, etc) and verified

by calculations and known ratios to be the values expected. For example a single PT on a 100KV bus will have a specific secondary value that when multiplied by the PT ratio arrives at the expected bus value of 100KV.

- Query SCADA for the power flows at the far end of the line protected by the questioned relay, compare those SCADA values to the values as determined by the questioned relay.

- Totalize the Watts and VARs on the bus and compare the totals to the values as seen by the questioned relay.

The point of the verification procedure is to ensure that all of the individual components are functioning properly; and that, an ongoing proactive procedure is in place to re-check the various components of the protective relay measuring systems.

Is wiring insulation or hi-pot testing required by this Maintenance Standard?
No, wiring insulation and equipment hi-pot testing are not specifically required by the Maintenance Standard. However, if the method of verifying CT and PT inputs to the relay involves some other method than actual observation of current and voltage transformer secondary inputs to the relay, it might be necessary to perform some sort of cable integrity test to verify that the instrument transformer secondary signals are actually making it to the relay and not being shunted off to ground. For instance, you could use CT excitation tests and PT turns ratio tests and compare to baseline values to verify that the instrument transformer outputs are acceptable. However, to conclude that these acceptable transformer instrument output signals are actually making it to the relay inputs, it also would be necessary to verify the insulation of the wiring between the instrument transformer and the relay.

My plant generator and transformer relays are electromechanical and do not have metering functions as do microprocessor based relays. In order for me to compare the instrument transformer inputs to these relays to the secondary values of other metered instrument transformers monitoring the same primary voltage and current signals, it would be necessary to temporarily connect test equipment like voltmeters and clamp on ammeters to measure the input signals to the relays. This practice seems very risky and a plant trip could result if the technician were to make an error while measuring these current and voltage signals. How can I avoid this risk? Also, what if no other instrument transformers are available which monitor the same primary voltage or current signal?
Comparing the input signals to the relays to the outputs of other independent instrument transformers monitoring the same primary current or voltage is just one method of verifying the instrument transformer inputs to the relays but is not required by the Standard. Plants can choose how to best manage their risk. If online testing is deemed too risky, offline tests such as, but not limited to, CT excitation test and PT turns ratio tests can be compared to baseline data and be used in conjunction with CT and PT secondary wiring insulation verification tests to adequately "verify the current and voltage circuit inputs from the voltage and current sensing devices to the protective relays …" while eliminating the risk of tripping an in service generator or transformer.

Similarly, this same offline test methodology can be used to verify the relay input voltage and current signals to relays when there are no other instrument transformers monitoring available for purposes of signal comparison.

15.3 Control circuitry associated with protective functions (Table 1-5)

This component of Protection Systems includes the trip coil(s) of the circuit breaker, circuit switcher or any other interrupting device. It includes the wiring from the batteries to the relays. It includes the wiring (or other signal conveyance) from every trip output to every trip coil. It includes any device needed for the correct processing of the needed trip signal to the trip coil of the interrupting device; this requirement is meant to capture inputs and outputs to and from a protective relay that are necessary for the correct operation of the protective functions. In short, every trip path must be verified; the method of verification is optional to the asset owner. An example of testing methods to accomplish this might be to verify, with a volt-meter, the existence of the proper voltage at the open contacts, the open circuited input circuit and at the trip coil(s). As every parallel trip path has similar failure modes, each trip path from relay to trip coil must be verified. Each trip coil must be tested to trip the circuit breaker (or other interrupting device) at least once. There is a requirement to operate the circuit breaker (or other interrupting device) at least once every six years as part of the complete functional test. If a suitable monitoring system is installed that verifies every parallel trip path then the manual-intervention testing of those parallel trip paths can be eliminated, however the actual operation of the circuit breaker must still occur at least once every six years. This 6-year tripping requirement can be completed as easily as tracking the real-time fault-clearing operations on the circuit breaker or tracking the trip coil(s) operation(s) during circuit breaker routine maintenance actions.

The circuit-interrupting device should not be confused with a motor-operated disconnect. The intent of this Standard is to require maintenance intervals and activities on Protection Systems equipment and not just all system isolating equipment.

It is necessary, however, to classify a device that actuates a high-speed auto-closing ground switch as an interrupting device if this ground switch is utilized in a Protection System and forces a ground fault to occur that then results in an expected Protection System operation to clear the forced ground fault. The SDT believes that this is essentially a transferred-tripping device without the use of communications equipment. If this high-speed ground switch is "…designed to provide protection for the BES…" then this device needs to be treated as any other Protection System component. The control circuitry would have to be tested within 12 years and any electromechanically operated device will have to be tested every 6 years. If the spring-operated ground switch can be disconnected from the solenoid triggering unit then the solenoid triggering unit can easily be tested without the actual closing of the ground blade.

Circuit breakers that participate in a UFLS or UVLS scheme are excluded from the tripping requirement, but not from the circuit test requirements; however the circuitry must be tested at least once every 12 years. There are many circuit interrupting devices in the distribution system that will be operating for any given under-frequency event that requires tripping for that event. A failure in the tripping-action of a single distributed system circuit breaker (or non-BES equipment interruption device) will be far less significant than, for example, any single

Transmission Protection System failure such as a failure of a bus differential lock-out relay. While many failures of these distributed system circuit breakers (or non-BES equipment interruption device) could add up to be significant, it is also believed that many circuit breakers are operated often on just fault clearing duty and therefore these circuit breakers are operated at least as frequently as any requirements that appear in this Standard.

The dc control circuitry also includes each auxiliary tripping relay (94) and each lock-out relay (86) that may exist in any particular trip scheme. If these devices are ~~electro-mechanical~~electromechanical components then they must be trip tested. The PSMT SDT considers these components to share some similarities in failure modes as ~~electro-mechanical~~electromechanical protective relays; as such there is a six year maximum interval between mandated maintenance tasks unless PBM is applied.

Contacts of the 86 or 94 that pass the trip current on to the circuit interrupting device trip coils will have to be checked as part of the 12 year requirement. Normally-open contacts that are not used to pass a trip signal and normally-closed contacts do not have to be verified. Verification of the tripping paths is the requirement.

New technology is also accommodated here; there are some tripping systems that have replaced the traditional hard-wired trip circuitry with other methods of trip-signal conveyance such as fiber-optics. It is the intent of the PSMT SDT to include this, and any other, technology that is used to convey a trip signal from a protective relay to a circuit breaker (or other interrupting device) within this category of equipment.

15.3.1 Frequently Asked Questions:

Is it permissible to verify circuit breaker tripping at a different time (and interval) than when we verify the protective relays and the instrument transformers?
Yes, provided the entire Protective System is tested within the individual components' maximum allowable testing intervals.

The Protection System Maintenance Standard describes requirements for verifying the tripping of circuit breakers. What is this telling me about maintenance of circuit breakers?
Requirements in PRC-005-2 are intended to verify the integrity of tripping circuits, including the breaker trip coil, as well as the presence of auxiliary supply (usually a battery) for energizing the trip coil if a protection function operates. Beyond this, PRC-005-2 sets no requirements for verifying circuit breaker performance, or for maintenance of the circuit breaker.

How do I test each dc Control Circuit path, as established in Table 1-5 "Protection System Control Circuitry (Trip coils and auxiliary relays)"?
Table 1-5 specifies that each breaker trip coil, auxiliary relay that carries trip current to a trip coil, and lockout relays that carry trip current to a trip coil must be operated within the specified time period. The required operations may be via targeted maintenance activities, or by documented operation of these devices for other purposes such as fault clearing.

Are high-speed ground switch trip coils included in the dc control circuitry?
Yes. PRC-005-2 includes high-speed grounding switch trip coils within the dc control circuitry to the degree that the initiating Protection Systems are characterized as "transmission Protection Systems."

Does the control circuitry and trip coil of a non-BES breaker, tripped via a BES protection component, have to be tested per Table 1.5?
An example of an otherwise non-BES circuit breaker that is tripped via a BES protection component might be (but is not limited to) a 12.5KV circuit breaker feeding (non-black-start) radial loads but has a trip that originates from an under-frequency (81) relay.
The relay must be verified.
The voltage signal to the relay must be verified.
All of the relevant dc supply tests still apply.
The unmonitored trip circuit must be verified every 12 years.
The trip coil of the circuit breaker does not have to be individually proven with an electrical trip.

15.4 Batteries and DC Supplies (Table 1-4)

IEEE guidelines were consulted to arrive at the maintenance activities for batteries. The following guidelines were used: IEEE 450 (for Vented Lead-Acid batteries), IEEE 1188 (for Valve-Regulated Lead-Acid batteries) and IEEE 1106 (for Nickel-Cadmium batteries).

The currently proposed NERC definition of a Protection System is

- Protective relays which respond to electrical quantities,
- Communications systems necessary for correct operation of protective functions,
- Voltage and current sensing devices providing inputs to protective relays,
- Station dc supply associated with protective functions (including station batteries, battery chargers, and non-battery-based dc supply), and
- Control circuitry associated with protective functions through the trip coil(s) of the circuit breakers or other interrupting devices."
- The station battery is not the only component that provides dc power to a Protection System. In the new definition for Protection System "station batteries" are replaced with "station dc supply" to make the battery charger and dc producing stored energy devices (that are not a battery) part of the Protection System that must be maintained.

The PSMT SDT recognizes that there are several technological advances in equipment and testing procedures that allow the owner to choose how to verify that a battery string is free of open circuits. The term "continuity" was introduced into the Standard to allow the owner to choose how to verify continuity of a battery set by various methods, and not to limit the owner to the two methods recommended in the IEEE standards. Continuity as used in Table 1-4 of the Standard refers to verifying that there is a continuous current path from the positive terminal of the station battery set to the negative terminal. Without verifying continuity of a station battery, there is no way to determine that the station battery is available to supply dc power to the station.

An open battery string will be an unavailable power source in the event of loss of the battery charger.

Batteries cannot be a unique population segment of a Performance-Based Maintenance Program (PBM) because there are too many variables in the ~~electro-chemical~~electrochemical process to completely isolate all of the performance-changing criteria necessary for using PBM on battery systems. However, nothing precludes the use of a PBM process for any other part of a dc supply besides the batteries themselves.

15.4.1 Frequently Asked Questions:

What constitutes the station dc supply as mentioned in the definition of Protective System?
The previous definition of Protection System includes batteries, but leaves out chargers. The latest definition includes chargers as well as dc systems that do not utilize batteries. This revision of PRC-005-2 is intended to capture these devices that were not included under the previous definition. The station direct current (dc) supply normally consists of two components: the battery charger and the station battery itself. There are also emerging technologies that provide a source of dc supply that does not include either a battery or charger.

Battery Charger - The battery charger is supplied by an available ac source. At a minimum, the battery charger must be sized to charge the battery (after discharge) and supply the constant dc load. In many cases, it may be sized also to provide sufficient dc current to handle the higher energy requirements of tripping breakers and switches when actuated by the protective relays in the Protection System.

Station Battery - Station batteries provide the dc power required for tripping and for supplying normal dc power to the station in the event of loss of the battery charger. There are several technologies of battery that require unique forms of maintenance as established in Table 1-4.

Emerging Technologies - Station dc supplies are currently being developed that use other energy storage technologies beside the station battery to prevent loss of the station dc supply when ac power is lost. Maintenance of these station dc supplies will require different kinds of tests and inspections. Table 1-4 presents maintenance activities and maximum allowable testing intervals for these new station dc supply technologies. However, because these technologies are relatively new the maintenance activities for these station dc supplies may change over time.

What did the PSMT SDT mean by "continuity" of the dc supply?
The PSMT SDT recognizes that there are several technological advances in equipment and testing procedures that allow the owner to choose how to verify that a battery string is free of open circuits. The term "continuity" was introduced into the Standard to allow the owner to choose how to verify continuity of a battery set by various methods, and not to limit the owner to the two methods recommended in the IEEE standards. Continuity as used in Table 1-4 of the Standard refers to verifying that there is a continuous current path from the positive terminal of the station battery set to the negative terminal. Without verifying continuity of a station battery, there is no way to determine that the station battery is available to supply dc power to the station.

An open battery string will be an unavailable power source in the event of loss of the battery charger.

The current path through a station battery from its positive to its negative connection to the dc control circuits is composed of two types of elements. These path elements are the electrochemical path through each of its cells and all of the internal and external metallic connections and terminations of the batteries in the battery set. If there is loss of continuity (an open circuit) in any part of the electrochemical or metallic path the battery set will not be available for service. In the event of the loss of the ac source or battery charger, the battery must be capable of supplying dc current, both for continuous dc loads and for tripping breakers and switches. Without continuity, the battery cannot perform this function.
At generating stations and large transmission stations where battery chargers are capable of handling the maximum current required by the Protection System, there are still problems that could potentially occur when the continuity through the connected battery is interrupted.

- Many battery chargers produce harmonics which can cause failure of dc power supplies in microprocessor based protective relays and other electronic devices connected to station dc supply. In these cases, the substation battery serves as a filter for these harmonics. With the loss of continuity in the battery, the filter provided by the battery is no longer present.

- Loss of electrical continuity of the station battery will cause, regardless of the battery charger's output current capability, a delayed response in full output current from the charger. Almost all chargers have an intentional 1 to 2 second delay to switch from a low substation dc load current to the maximum output of the charger. This delay would cause the opening of circuit breakers to be delayed which could violate system performance standards.

Monitoring of the station dc supply voltage will not indicate that there is a problem with the dc current path through the battery unless the battery charger is taken out of service. At that time a break in the continuity of the station battery current path will be revealed because there will be no voltage on the station dc circuitry. This particular test method, while proving battery continuity, may not be acceptable to all installations.

Although the Standard prescribes what must be accomplished during the maintenance activity it does not prescribe how the maintenance activity should be accomplished. There are several methods that can be used to verify the electrical continuity of the battery. These are not the only possible methods, simply a sampling of some methods:

- One method is to measure that there is current flowing through the battery itself by a simple clamp on milliamp-range ammeter. A battery is always either charging or discharging. Even when a battery is charged there is still a measurable float charge current that can be detected to verify that there is continuity in the electrical path through the battery.

- A simple test for continuity is to remove the battery charger from service and verify that the battery provides voltage and current to the dc system. However, the behavior of the

various dc-supplied equipment in the station should be considered before using this approach.

- Manufacturers of microprocessor controlled battery chargers have developed methods for their equipment to periodically (or continuously) test for battery continuity For example, one manufacturer periodically reduces the float voltage on the battery until current from the battery to the dc load can be measured to confirm continuity.

- Applying test current (as in some ohmic testing devices, or devices for locating dc grounds) will provide a current that when measured elsewhere in the string, will prove that the circuit is continuous.

- Internal ohmic measurements of the cells and units of Lead Acid Batteries (VRLA & VLA) can detect lack of continuity within the cells of a battery string and when used in conjunction with resistance measurements of the battery's external connections can prove continuity. Also some methods of taking internal ohmic measurements by their very nature can prove the continuity of a battery string without having to use the results of resistance measurements of the external connections.

- Specific Gravity tests can infer continuity because without continuity there could be no charging occurring and if there is no charging then Specific Gravity will go down below acceptable levels.

No matter how the electrical continuity of a battery set is verified it is a necessary maintenance activity that must be performed at the intervals prescribed by Table 1-4 to insure that the station dc supply has a path that can provide the required current to the Protection System at all times.

When should I check the station batteries to see if they have sufficient energy to perform as designed?

The answer to this question depends on the type of battery (Valve~~-regulated lead-acid, vented lead~~ -Regulated Lead-Acid, Vented Lead-Acid, or Nickel-Cadmium), and the maintenance activity chosen.

For example, if you have a Valve-Regulated Lead-Acid (VRLA) station battery, and you have chosen to evaluate the measured cell/unit internal ohmic values to the battery cell's baseline, you will have to perform verification at a maximum maintenance interval of no greater than every six months. While this interval might seem to be quite short, keep in mind that the 6 month interval is consistent with IEEE guidelines for VRLA batteries; this interval provides an accumulation of data that better shows when a VRLA battery is no longer capable of its design capacity.

If, for a VRLA station battery, you choose to conduct a performance capacity test on the entire station battery as the maintenance activity, then you will have to perform verification at a maximum maintenance interval of no greater than every 3 calendar years.

How is a baseline established for cell/unit internal ohmic measurements?

Establishment of cell/unit internal ohmic baseline measurements should be completed when lead acid batteries are newly installed. To ensure that the baseline ohmic cell/unit values are most indicative of the station batteries ability to perform as designed they should be made upon

installation of the station battery and the completion of a performance test of the battery's capacity.

When internal ohmic measurements are taken, ~~the type of~~consistent test equipment should be used to establish the baseline ~~must be~~and used for ~~any~~the future trending of the cells internal ohmic measurements because of variances in test equipment and the type of ohmic measurement used by different manufacturer's equipment. Keep in mind that one manufacturer's "Conductance" test equipment does not produce similar results as another manufacturer's "Impedance" test equipment even though both manufacturers have produced "Ohmic" test equipment.

For all new installations of Valve-Regulated Lead-Acid (VRLA) batteries and Vented Lead-Acid (VLA) batteries, where trending of the cells internal ohmic measurements to a baseline are to be used to determine the ability of the station battery to perform as designed, the establishment of the baseline as described above should be followed at the time of installation to insure the most accurate trending of the cell/unit. However, often for older V~~L~~RLA batteries the owners of the station batteries have not established a baseline at installation. Also for owners of VLA batteries who want to establish a maintenance activity which requires trending of measured ohmic values to a baseline, there was typically no baseline established at installation of the station battery to trend to.

To resolve the problem of the unavailability of baseline internal ohmic measurements for the individual cell/unit of a station battery, ~~all~~many manufacturers of internal ohmic measurement devices have established libraries of baseline values for VRLA and VLA batteries using their testing device. Also several of the battery manufacturers have libraries of baselines for their products that can be used to trend to. However it is important that when using battery manufacturer supplied data that it is verified that the baseline readings to be used were taken with the same ohmic testing device that will be used for future measurements~~.~~ (for example "Conductance Readings" from one manufacturer's test equipment do not correlate to "Impedance Readings" from a different manufacturer's test equipment).

Although ~~the manufactures~~many manufacturers may have provided base line values which will allow trending of the internal ohmic measurements over the remaining life of a station battery, these baselines are not the actual cell/unit measurements for the battery being trended. It is important to have a baseline tailored to the station battery to more accurately use the tool of ohmic measurement trending. That more customized baseline can only be created by following the establishment of a baseline for each cell/unit at the time of installation of the station battery.

Why determine the State of Charge?

Even though there is no present requirement to check the state of charge of a battery, it can be a very useful tool in determining the overall condition of a battery system. The following discussions are offered as a general reference.

When a battery is fully charged the battery is available to deliver its existing capacity. As a battery is discharged its ability to deliver its maximum available capacity is diminished. It is necessary to determine if the state of charge has dropped to an unacceptable level.

IEEE Standards 450, 1188, and 1106 for Vented Lead-Acid (VLA), Valve-Regulated Lead-Acid (VRLA), and Nickel-Cadmium (NiCd) batteries respectively discuss state of charge in great

detail in their standards or annexes to their standards. The above IEEE standards are excellent sources for describing how to determine state of charge of the battery system.

What is State of Charge and how can it be determined in a station battery?
The state of charge of a battery refers to the ratio of residual capacity at a given instant to the maximum capacity available from the battery. When a battery is fully charged the battery is available to deliver its existing capacity. As a battery is discharged its ability to deliver its maximum available capacity is diminished. Knowing the amount of energy left in a battery compared with the energy it had when it was fully charged gives the user an indication of how much longer a battery will continue to perform before it needs recharging.

For Vented Lead-Acid (VLA) batteries which use accessible liquid electrolyte, a hydrometer can be used to test the specific gravity of each cell as a measure of its state of charge. The hydrometer depends on measuring changes in the weight of the active chemicals. As the battery discharges the active electrolyte, sulphuric acid, is consumed and the concentration of the sulphuric acid in water is reduced. This in turn reduces the specific gravity of the solution in direct proportion to the state of charge. The actual specific gravity of the electrolyte can therefore be used as an indication of the state of charge of the battery. Hydrometer readings may not tell the whole story, as it takes a while for the acid to get mixed up in the cells of a VLA battery. If measured right after charging, you might see high specific gravity readings at the top of the cell, even though it is much less at the bottom. Conversely if taken shortly after adding water to the cell the specific gravity readings near the top of the cell will be lower than those at the bottom.

Nickel-Cadmium batteries, where the specific gravity of the electrolyte does not change during battery charge and discharge, and Valve-Regulated Lead-Acid (VRLA) batteries, where the electrolyte is not accessible, cannot have their state of charge determined by specific gravity readings. For these two types of batteries and also for VLA batteries, where another method besides taking hydrometer readings is desired, the state of charge may be determined by using the battery charger and taking voltage and current readings during float and equalize (high-rate charge mode). This method is an effective means of determining when the state of charge is low and when it is approaching a fully charged condition which gives the assurance that the available battery capacity will be maximized.

Why determine the Connection Resistance?
High connection resistance can cause abnormal voltage drop or excessive heating during discharge of a station battery. During periods of a high rate of discharge of the station battery a very high resistance can cause severe damage. The maintenance requirement to verify battery terminal connection resistance in Table 1-4 is established to verify that the integrity of all battery electrical connections is acceptable. This verification includes cell-to-cell (intercell) and external circuit terminations.

Adequacy of the electrical terminations can be determined by comparing resistance measurements for all connections taken at the time of station battery's installation to the same resistance measurements taken at the maintenance interval chosen not to exceed the maximum

maintenance interval of Table 1-4. Trending of the interval measurements to the baseline measurements will identify any degradation in the battery connections. When the connection resistance values exceed the acceptance criteria for the connection, the connection is typically disassembled, cleaned, reassembled and measurements taken to verify that the measurements are adequate when compared to the baseline readings.

IEEE Standard 450 for Vented Lead-Acid (VLA) batteries "informative" annex F, and IEEE Standard 1188 for Valve-Regulated Lead-Acid (VRLA) batteries "informative" annex D provide excellent information and examples on performing connection resistance measurements using a microohmmeter and connection detail resistance measurements. Although this information is contained in standards for lead acid batteries the information contained is applicable to Nickel-Cadmium batteries also.

What conditions should be inspected for visible battery cells?

The maintenance requirement to inspect the cell condition of all station battery cells where the cells are visible is a maintenance requirement of Table 1-4. Station batteries are different from any other component in the Protection Station because they are a perishable product due to the ~~electro-chemical~~electrochemical process which is used to produce dc electrical current and voltage. This inspection is a detailed visual inspection of the cells for abnormalities that occur in the aging process of the cell. In VLA battery visual inspections, some of the things that the inspector is typically looking for on the plates are signs of sulfation of the plates, abnormal color (possible copper contamination) and abnormal conditions such as cracked grids. The visual inspection could look for symptoms of hydration that would indicate that the battery has been left in a completely discharged state for a prolonged period. Besides looking at the plates for signs of aging, all internal connections such as the bus bar connection to each plate and the connections to all posts of the battery need to be visually inspected for abnormalities. In a complete visual inspection for the condition of the cell the cell plates, separators and sediment space of each cell must be looked at for signs of deterioration. An inspection of the station battery's cell condition also includes looking at all terminal posts and cell-to-cell electric connections to ensure they are corrosion free. The case of the battery containing the cell or cells must be inspected for cracks and electrolyte leaks through cracks and the post seals.

This maintenance activity cannot be extended beyond the maximum maintenance interval of Table 1-4 by a Performance-Based Maintenance Program (PBM) because of the ~~electro-chemical~~electrochemical aging process of the station battery nor can there be any monitoring associated with it because there must be a visual inspection involved in the activity. A remote visual inspection could possibly be done, but its interval must be no greater than the maximum maintenance interval of Table 1-4.

Why consider the ability of the station battery to perform as designed?

Determining the ability of a station battery to perform as designed is critical in the process of determining when the station battery must be replaced or when an individual cell or battery unit must be removed or replaced. For lead acid batteries the ability to perform as designed can be determined in more than one manner.

The two acceptable methods for proving that a station lead acid battery can perform as designed are based on two different philosophies. The first maintenance activity requires tests and evaluation of the internal ohmic measurements on each of the individual cells/units of the station battery to determine that each component can perform as designed and therefore the entire station battery can be verified to perform as designed. The second activity requires a capacity discharge test of the entire station battery to verify that degradation of one or several components (cells) in the station battery has not deteriorated to a point where the total capacity of the station battery system falls below its designed rating.

The first maintenance activity listed in Table 1-4 for verifying that a station battery can perform as designed uses maximum maintenance intervals for evaluating internal ohmic measurements in relation to their baseline measurements that are based on industry experience, EPRI technical reports and application guides, and the IEEE battery standards. By evaluating the internal ohmic measurements for each cell and comparing that measurement to the cell's baseline ohmic measurement low-capacity cells can be identified and eliminated or the whole station battery replaced to keep the station battery capable of performing as designed. Since the philosophy behind internal ohmic measurement evaluation is based on the fact that each battery component must be verified to be able to perform as designed, the interval for verification by this maintenance activity must be shorter to catch individual cell/unit degradation.

It should be noted that even if a lead acid battery unit is composed of multiple cells where the ohmic measurement of each cell cannot be taken, the ohmic test can still be accomplished. The data produced becomes trending data on the multi-cell unit instead of trending individual cells. Care must be taken in the evaluation of the ohmic measures of entire units to detect a bad cell that has a poor ohmic value. Good ohmic values of other cells in the same battery unit can make it harder to detect the poor ohmic measurement of a bad cell because the only ohmic measurement available is of all the cells in the battery unit.

This first maintenance activity is applicable only for Vented Lead-Acid (VLA) and Valve-Regulated Lead-Acid (VRLA) batteries; this trending activity has not shown to be effective for NiCd batteries thus the only choices for owners of NiCd batteries are the performance tests of the second activity (see applicable IEEE guideline for specifics on performance tests).

The second maintenance activity listed in Table 1-4 for verifying that a station battery can perform as designed uses maximum maintenance intervals for capacity testing that were designed to align with the IEEE battery standards. This maintenance activity is applicable for Vented Lead-Acid, Valve-Regulated Lead-Acid, and Nickel-Cadmium batteries.
The maximum maintenance interval for discharge capacity testing is longer than the interval for testing and evaluation of internal ohmic cell measurements. An individual component of a station battery may degrade to an unacceptable level without causing the total station battery to fall below its designed rating under capacity testing.

IEEE Standards 450, 1188, and 1106 for vented lead-acid (VLA), Valve-Regulated Lead-Acid (VRLA), and Nickel-Cadmium (NiCd) batteries respectively (which together are the most commonly used substation batteries on the BES) go into great detail about capacity testing of the

entire battery set to determine that a battery can perform as designed or needs to be replaced soon.

Why in Table 1-4 of PRC-005-2 is there a maintenance activity to inspect the structural intergrity of the battery rack?
The three IEEE standards (1188, 450, and 1106) for VRLA, Vented Lead-Acid, and Nickel-Cadmium batteries all recommend that as part of any battery inspection the battery rack should be inspected. The purpose of this inspection is to verify that the battery rack is correctly installed and has no deterioration that could weaken its structural integrity.
Because the battery rack is specifically designed for the battery that is mounted on it, weakening of its structural members by rust or corrosion can physically jeopardize the battery.

What is required to comply with the "Unintentional dc Grounds" requirement?
In most cases, the first ground that appears on a battery is not a problem. It is the unintentional ground that appears on the opposite pole that becomes problematic. Even then many systems are designed to operate favorably under some unintentional DC ground situations. It is up to the owner of the Protection System to determine if corrective actions are needed on detected unintentional DC grounds. The Standard merely requires that a check be made for the existence of Unintentional DC Grounds. Obviously a "check-off" of some sort will have to be devised by the inspecting entity to document that a check is routinely done for Unintentional DC Grounds because ~~to~~of the possible consequences to the Protection System.

Where the Standard refers to "all cells" is it sufficient to have a documentation method that refers to "all cells" or do we need to have separate documentation for every cell? For example ~~to~~do I need 60 individual documented check-offs for good electrolyte level or would a single check-off per bank be sufficient?
A single check-off per battery bank is sufficient for documentation, as long as the single check-off attests to checking all cells/units.

Does this Standard refer to Station batteries or all batteries, for example Communications Site Batteries?
This Standard refers to Station Batteries. The drafting team does not believe that the scope of this Standard refers to communications sites. The batteries covered under PRC-005-2 are the batteries that supply the trip current to the trip coils of the interrupting devices that are a part of the Protection System. The SDT believes that a loss of power to the communications systems at a remote site would cause the communications systems associated with protective relays to alarm at the substation. At this point the corrective actions can be initiated.

My VRLA batteries have multiple-cells within an individual battery jar (or unit); how am I expected to comply with the cell-to-cell ohmic measurement requirements on these units that I cannot get to?
Measurement of cell/unit (not all batteries allow access to "individual cells" some "units" or jars may have multiple cells within a jar) internal ohmic values of all types of lead acid batteries where the cells of the battery are not visible is a station dc supply maintenance activity in Table 1-4.

What are cell/unit internal ohmic measurements?

With the introduction of Valve-Regulated Lead-Acid (VRLA) batteries to station dc supplies in the 1980's several of the standard maintenance tools that are used on Vented Lead-Acid (VLA) batteries were unable to be used on this new type of lead-acid battery to determine its state of health. The only tools that were available to give indication of the health of these new VRLA batteries were voltage readings of the total battery voltage, the voltage of the individual cells and periodic discharge tests.

In the search for a tool for determining the health of a VRLA battery several manufacturers studied the electrical model of a lead acid battery's current path through its cell. The overall battery current path consists of resistance and inductive and capacitive reactance. The inductive reactance in the current path through the battery is so minuscule when compared to the huge capacitive reactance of the cells that it is often ignored in most circuit models of the battery cell. Taking the basic model of a battery cell manufacturers of battery test equipment have developed and marketed testing devices to take measurements of the current path to detect degradation in the internal path through the cell.

In the battery industry these various types of measurements are referred to as ohmic measurements. Terms used by the industry to describe ohmic measurements are ac conductance, ac impedance, and dc resistance. They are defined by the test equipment providers and IEEE and refer to the method of taking ohmic measurements of a lead acid battery. For example in one manufacturer's ac conductance equipment measurements are taken by applying a voltage of a known frequency and amplitude across a cell or battery unit and observing the ac current flow it produces in response to the voltage. A manufacturer of an ac impedance meter measures ac current of a known frequency and amplitude that is passed through the whole battery string and determines the impedances of each cell or unit by measuring the resultant ac voltage drop across them. On the other hand dc resistance of a cell is measured by a third man~~u~~facturer's equipment by applying a dc load across the cell or unit and measuring the step change in both the voltage and current to calculate the internal dc resistance of the cell or unit.

It is important to note that because of the rapid development of the market for ohmic measurement devices there were no standards developed or used to mandate the test signals used in making ohmic measurements. Manufacturers using proprietary methods and applying different frequencies and magnitudes for their signals have developed a diversity of measurement devices. This diversity in test signals coupled with the three different types of ohmic measurements techniques (impedance conductance and resistance) make it impossible to get the same ohmic measurement for a cell with different ohmic measurement devices. However, IEEE has recognized the great value for choosing one device for ohmic measurement, no matter who makes it or the method to calculate the ohmic measurement. The only caution given by IEEE and the battery manufacturers is that when trending the cells of a lead acid station battery ~~the same~~consistent ohmic measurement ~~device must~~devices should be used to establish the baseline measurement and to trend the battery set for its entire life.

For VRLA batteries both IEEE Standard 1188 (Maintenance, Testing and Replacement of VRLA Batteries) and IEEE Standard 1187 (Installation Design and Installation of VRLA Batteries) recognize the importance of the maintenance activity of establishing a baseline for "cell/unit

internal ohmic measurements~~"~~ (impedance, conductance and resistance)" and trending them at frequent intervals over the life of the battery. There are extensive discussions about the need for taking these measurements in these standards. IEEE Standard 1188 requires taking internal ohmic values as described in Annex C4 during regular inspections of the station battery. For VRLA batteries IEEE Standard 1188 in talking about the necessity of establishing a base line and trending it over time says, "depending on the degree of change a performance test, cell replacement or other corrective action may be necessary.

For VLA batteries IEEE Standard 484 (Installation of VLA batteries) gives several ~~guide lines~~guidelines about establishing baseline measurements on newly installed lead acid stationary batteries. The standard also discusses the need to look for significant changes in the ohmic measurements, the caution that measurement data will differ with each type of model of instrument used, and lists a number of factors that affect ohmic measurements.

At the beginning of the 21st century EPRI conducted a series of extensive studies to determine the relationship of internal ohmic measurements to the capacity of a lead acid battery cell. The studies indicated that internal ohmic measurements were in fact a good indicator of a lead acid battery cell's capacity but because users often were only interested in the total station battery capacity and the technology does not precisely predict overall battery capacity, if a user only needs "an accurate measure of the overall battery capacity" they should "perform a battery capacity test."

Prior to the EPRI studies some large and small companies which owned and maintained station dc supplies in NERC Protection Systems developed maintenance programs where trending of ohmic measurements of cells/units of the station's battery became the maintenance activity for determining if the station battery could perform as designed. By evaluation of the trending of the ohmic measurements over time the owner could track the performance of the individual components of the station battery and determine if a total station battery or components of it required capacity testing, removal, replacement or in many instances replacement of the entire station battery. By taking this approach these owners have eliminated having to perform capacity testing at prescribed intervals to determine if a battery needs to be replaced and are still able to effectively determine if a station battery can perform as designed.

Why verify voltage?

There are two required maintenance activities associated with verification of dc voltages in Table 1-4. These two required activities are to verify station dc supply voltage and float voltage of the battery charger, and have different maximum maintenance intervals. Both of these voltage verification requirements relate directly to the battery charger maintenance.

The verification of the dc supply voltage is simply an observation of battery voltage to prove that the charger has not been lost or is not malfunctioning. Low battery voltage below float voltage indicates that the battery may be on discharge and if not corrected the station battery could discharge down to some extremely low value that will not operate the Protection System. High voltage, close to or above the maximum allowable dc voltage for equipment connected to the

station dc supply indicates the battery charger may be malfunctioning by producing high dc voltage levels on the Protection System. If corrective actions are not taken to bring the high voltage down, the dc power supplies and other electronic devices connected to the station dc supply may be damaged. The maintenance activity of verifying the float voltage of the battery charger is not to prove that a charger is lost or producing high voltages on the station dc supply, but rather to prove that the charger is properly floating the battery within the proper voltage limits.

Why check for the electrolyte level?

In Vented Lead-Acid (VLA) and Nickel-Cadmium (NiCd) batteries the visible electrolyte level must be checked as one of the required maintenance activities that must be performed at an interval that is equal to or less than the maximum maintenance interval of Table 1-4. Because the electrolyte level in Valve-Regulated Lead-Acid (VRLA) batteries cannot be observed there is no maintenance activity listed in Table 1-4 of the Standard for checking the electrolyte level. Low electrolyte level of any cell of a VLA or NiCd station battery is a condition requiring correction. Typically the electrolyte level should be returned to an acceptable level for both types of batteries (VLA and NiCd) by adding distilled or other approved-quality water to the cell.

Often people confuse the interval for watering all cells required due to evaporation of the electrolyte in the station battery cells with the maximum maintenance interval required to check the electrolyte level. In many of the modern station batteries the jar containing the electrolyte is so large with the band between the high and low electrolyte level so wide that normal evaporation which would require periodic watering of all cells takes several years to occur. However, because loss of electrolyte due to cracks in the jar, overcharging of the station battery or other unforeseen events can cause rapid loss of electrolyte the shorter maximum maintenance intervals for checking the electrolyte level are required. A low level of electrolyte in a VLA battery cell which exposes the tops of the plates can cause the exposed portion of the plates to accelerated sulfation resulting in loss of cell capacity. Also, in a VLA battery where the electrolyte level goes below the end of the cell withdrawal tube or filling funnel, gasses can exit the cell by the tube instead of the flame arrester and present an explosion hazard.

Why does it appear that there are two maintenance activities in Table 1-4(b) (for VRLA batteries) that appear to be the same activity and have the same maximum maintenance interval?

There are two different and distinct reasons for doing almost the same maintenance activity at the same interval for Valve-Regulated Lead-Acid (VRLA) batteries. The first similar activity for VRLA batteries (Table 1-4(b)) that has the same maximum maintenance interval is to "measure battery cell/unit internal ohmic values." Part of the reason for this activity is because the visual inspection of the cell condition is unavailable for VRLA batteries. Besides the requirement to measure the internal ohmic measurements of VRLA batteries to determine the internal health of the cell, the maximum maintenance interval for this activity is significantly shorter than the interval for Vented Lead-Acid (VLA) due to some unique failure modes for VRLA batteries. Some of the potential problems that VRLA batteries are susceptible to that do not affect VLA batteries are thermal runaway, cell dry-out, and cell reversal when one cell has a very low capacity.

The other similar activity listed in Table 1-4(b) is “verify that the station battery can perform as designed by evaluating the measured cell/unit internal ohmic values to station battery baseline.” This activity allows an owner the option to choose between this activity with its much shorter maximum maintenance interval or the longer maximum maintenance interval for the maintenance activity to “Verify that the station battery can perform as designed by conducting a performance, service, or modified performance capacity test of the entire battery bank.”

For VRLA batteries, there are two drivers for internal ohmic readings. The first driver is for a means to trend battery life. A comparison and trending against the baseline new battery ohmic reading can be used in lieu of capacity tests to determine remaining battery life. Remaining battery life is analogous to stating that the battery is still able to "perform as designed". This is the intent of the “capacity 6 month test” at Row 4 on Table 1-4b.

The second big driver is VRLA batteries tendency for thermal runaway. This is the intent of the “thermal runaway test” at Row 2 on Table 1-4b. In order to detect a cell in thermal runaway, you need not have a formal trending program to track when a cell has reached a 25% increase over baseline. Rather it will stick out like a sore thumb when compared to the other cells in a string at a given point in time regardless of the age of all the cells in a string. In other words, if the battery is 10 years old and all the cells are gradually approaching a 25% increase in ohmic values over baseline, then you have a battery which is approaching end of life. You need to get ready to buy a new battery but you do not have to worry about an impending catastrophic failure. On the other hand, if the battery is five years old and you have one cell that has a markedly different ohmic reading than all the other cells, then you need to be worried that this cell is in thermal runaway and catastrophic failure is imminent.

If an entity elects to use a capacity test rather than a cell ohmic value trending program, this does not eliminate the need to be concerned about thermal runaway – the entity still needs to do the 6 month readings and look for cells which are outliers in the string but they need not trend results against the factory/as new baseline. Some entities will not mind the extra administrative burden of having the ongoing trending program against baseline - others would rather just do the capacity test and not have to trend the data against baseline. Nonetheless, all entities must look for ohmic outliers on a 6 month basis.

It is possible to accomplish both tasks listed (trend testing for capacity and testing for thermal runaway candidates) with the very same ohmic test. It becomes an analysis exercise of watching the trend from baselines and watching for the oblique cell measurement.

15.5 Associated communications equipment (Table 1-2)

The equipment used for tripping in a communications assisted trip scheme is a vital piece of the trip circuit. Remote action causing a local trip can be thought of as another parallel trip path to the trip coil that must be tested.

Besides the trip output and wiring to the trip coil(s) there is also a communications medium that must be maintained.
Newer technologies now exist that achieve communications-assisted tripping without the conventional wiring practices of older technology.

For example: older technologies may have included *Frequency Shift Key* methods. This technology requires that guard and trip levels be maintained.

The actual tripping path(s) to the trip coil(s) may be tested as a parallel trip path within the dc control circuitry tests.

Emerging technologies transfer digital information over a variety of carrier mediums that are then interpreted locally as trip signals.

The requirements apply to the communicated signal needed for the proper operation of the protective relay trip logic or scheme. Therefore this Standard is applied to equipment used to convey both trip signals (permissive or direct) and block signals.

It was the intent of this Standard to require that a test be ~~made of~~performed on any communications-assisted trip scheme regardless of the vintage of ~~the~~ technology.The essential element is that the tripping (or blocking) occurs locally when the remote action has been asserted; or that the tripping (or blocking) occurs remotely when the local action is asserted. Note that the required testing can still be done within the concept of testing by overlapping segments. Associated communications equipment can be (but is not limited to) testing at other times and different frequencies as the protective relays, the individual trip paths and the affected circuit interrupting devices.

Some newer installations utilize digital signals over fiber-optics from the protective relays in the control house to the circuit interrupting device in the yard. This method of tripping the circuit breaker, even though it might be considered communications, must be maintained per the dc control circuitry maintenance requirements.

15.5.1 Frequently Asked Questions:

What are some examples of mechanisms to check communications equipment functioning?
For unmonitored Protection Systems, various types of communications systems will have different facilities for on-site integrity checking to be performed at least every three months during a substation visit. Some examples are, but not limited to:

- On-off power-line carrier systems can be checked by performing a manual carrier keying test between the line terminals, or carrier check-back test from one terminal.
- Systems which use frequency-shift communications with a continuous guard signal (over a telephone circuit, analog microwave system, etc.) can be checked by observing for a loss-of-guard indication or alarm. For frequency-shift power-line carrier systems, the guard signal level meter can also be checked.
- Hard-wired pilot wire line Protection Systems typically have pilot-wire monitoring relays that give an alarm indication for a pilot wire ground or open pilot wire circuit loop.
- Digital communications systems typically have a data reception indicator or data error indicator (based on loss of signal, bit error rate, or frame error checking).

For monitored Protection Systems, various types of communications systems will have different facilities for monitoring the presence of the communications channel, and activating alarms that can be monitored remotely. Some examples are, but not limited to:

- On-off power-line carrier systems can be shown to be operational by automated periodic power-line carrier check-back tests, with remote alarming of failures.
- Systems which use a frequency-shift communications with a continuous guard signal (over a telephone circuit, analog microwave system, etc.) can be remotely monitored with a loss-of-guard alarm or low signal level alarm.
- Hard-wired pilot wire line Protection Systems can be monitored by remote alarming of pilot-wire monitoring relays.
- Digital communications systems can activate remotely monitored alarms for data reception loss or data error indications.
- Systems can be queried for the data error rates.

For the highest degree of monitoring of Protection Systems, the communications system must monitor all aspects of the performance and quality of the channel that show it meets the design performance criteria, including monitoring of the channel interface to protective relays.

- In many communications systems signal quality measurements including signal-to-noise ratio, received signal level, reflected transmitter power or standing wave ratio, propagation delay, and data error rates are compared to alarm limits. These alarms are connected for remote monitoring.
- Alarms for inadequate performance are remotely monitored at all times, and the alarm communications system to the remote monitoring site must itself be continuously monitored to assure that the actual alarm status at the communications equipment location is continuously being reflected at the remote monitoring site.

What is needed for the 3-month inspection of communications-assisted trip scheme equipment?

The 3-month inspection applies to unmonitored equipment. An example of compliance with this requirement might be, but is not limited to:

With each site visit, check that the equipment is free from alarms, check any metered signal levels, and that power is still applied. While this might be explicit for a particular type of equipment (i.e. FSK equipment), the concept should be that the entity verify that the communications equipment that is used in a Protection System is operable through a cursory inspection and site visit. This site visit can be eliminated on this particular example if the FSK equipment had a monitored alarm on Loss of Guard. Blocking carrier systems with auto checkbacks will present an alarm when the channel fails allowing a visual indication. With no auto checkback, the channel integrity will need to be verified by a manual checkback or a two ended signal check. This check could also be eliminated by bring the auto checkback failure alarm to the monitored central location.

Does a fiber optic I/O scheme used for breaker tripping or control within a station, for example - transmitting a trip signal or control logic between the control house and the breaker control cabinet, constitute a communications system?

This equipment is presently classified as being part of the Protection System Control Circuitry and tested per the portions of Table 1 applicable to Protection System Control Circuitry rather than those portions of the table applicable to communications equipment.

In Table 1-2, the Maintenance Activities section of the Protective System Communications Equipment and Channels refers to the quality of the channel meeting "performance criteria". What is meant by performance criteria?
Protection System communications channels must have a means of determining if the channel and communications equipment is operating normally. If the channel is not operating normally an alarm will be indicated. For unmonitored systems this alarm will probably be on the panel. For monitored systems, the alarm will be transmitted to a remote location.

Each entity will have established a nominal performance level for each protective system communications channel that is consistent with proper functioning of the Protection System. If that level of nominal performance is not being met, the system will go into alarm. Following are some examples of protective system communications channel performance measuring:

- For direct transfer trip using a frequency shift power line carrier channel, a guard level monitor is part of the equipment. A normal receive level is established when the system is calibrated and if the signal level drops below an established level, the system will indicate an alarm.
- An on-off blocking signal over power line carrier is used for directional comparison blocking schemes on transmission lines. During a fault, block logic is sent to the remote relays by turning on a local transmitter and sending the signal over the power line to a receiver at the remote end. This signal is normally off so continuous levels cannot be checked. These schemes use check-back testing to determine channel performance. A predetermined signal sequence is sent to the remote end and the remote end decodes this signal and sends a signal sequence back. If the sending end receives the correct information from the remote terminal, the test passes and no alarm is indicated. Full power and reduced power tests are typically run. Power levels for these tests are determined at the time of calibration.
- Pilot wire relay systems use a hardwire communications circuit to communicate between the local and remote ends of the protective zone. This circuit is monitored by circulating a dc current between the relay systems. A typical level may be 1 mA. If the level drops below the setting of the alarm monitor, the system will indicate an alarm.
- Modern digital relay systems use data communications to transmit relay information to the remote end relays. An example of this is a line current differential scheme commonly used on transmission lines. The protective relays communicate current magnitude and phase information over the communications path to determine if the fault is located in the protective zone. Quantities such as digital packet loss, bit error rate and channel delay are monitored to determine the quality of the channel. These limits are determined and

set during relay commissioning. Once set, any channel quality problems that fall outside the set levels will indicate an alarm.

The previous examples show how some protective relay communications channels can be monitored and how the channel performance can be compared to performance criteria established by the entity. This Standard does not state what the performance criteria will be—; it just requires that the entity establish nominal criteria so protective system channel monitoring can be performed.

How is the performance criteria of Protection System communications equipment involved in the maintenance program?
An entity determines the acceptable performance criteria depending on the technology implemented. If the communications channel performance of a Protection System varies from the pre-determined performance criteria for that system then these results should be investigated and resolved.

How do I verify the A/D converters of microprocessor-based relays?
There are a variety of ways to do this. Two examples would be: using values gathered via data communications and automatically comparing these values with values from other sources, or using groupings of other measurements (such as vector summation of bus feeder currents) for comparison. Many other methods are possible.

15.6 Alarms (Table 2)

In addition to the tables of maintenance for the components of a Protection System, there is an additional table added for alarms. This additional table was added for clarity. This enabled the common alarm attributes to be consolidated into a single spot and thus make it easier to read the Tables 1-1 through 1-5. The alarms need to arrive at a site wherein a corrective action can be initiated. This could be a control room, operations center, etc. The alarming mechanism can be a Standard alarming system or an auto-polling system, the only requirement is that the alarm be brought to the action-site within 24 hours. This effectively makes manned-stations equivalent to monitored stations. The alarm of a monitored point (for example a monitored trip path with a lamp) in a manned-station now makes that monitored point eligible for monitored status. Obviously, these same rules apply to a non-manned-station, which is that if the monitored point has an alarm that is auto-reported to the operations center (for example) within 24 hours then it too is considered monitored.

15.6.1 Frequently Asked Question:

Why are there activities defined for varying degrees of monitoring a Protection System component when that level of technology may not yet be available?
There may already be some equipment available that is capable of meeting the highest levels of monitoring criteria listed in the Tables. However, even if there is no equipment available today that can meet this level of monitoring the Standard establishes the necessary requirements for when such equipment becomes available. By creating a roadmap for development, this provision makes the Standard technology-neutral. The Standard Drafting Team wants to avoid the need to

revise the Standard in a few years to accommodate technology advances that may be coming to the industry.

Does a fail-safe "form b" contact that is alarmed to a 24/7 operation center classify as an alarm path with monitoring?
If the fail-safe "form-b" contact that is alarmed to a 24/7 operation center causes the alarm to activate for failure of any portion of the alarming path from the alarm origin to the 24/7 operations center then this can be classified as an alarm path with monitoring.

15.7 Examples of Evidence of Compliance

To comply with the requirements of this Standard an entity will have to document and save evidence. The evidence can be of many different forms. The Standard Drafting Team recognizes that there are concurrent evidence requirements of other NERC Standards that could, at times, fulfill evidence requirements of this Standard.

15.7.1 Frequently Asked Questions:

What forms of evidence are acceptable?

Acceptable forms of evidence, as relevant for the Requirement being documented, include but are not limited to:

- Process documents or plans
- Data (such as relay settings sheets, photos, SCADA, and test records)
- Database lists, records and/or screen shots that demonstrate compliance information
- Prints, diagrams and/or schematics
- Maintenance records
- Logs (operator, substation, and other types of log)
- Inspection forms
- Mail, memos, or email proving the required information was exchanged, coordinated, submitted or received
- Check-off forms (paper or electronic)
- Any record that demonstrates that the maintenance activity was known, accounted for, and/or performed.

If I replace a failed Protection System component with another component, what testing do I need to perform on the new component?
In order to reset the Table 1 maintenance interval for the replacement component, all relevant Table 1 activities for the component should be performed.

I have evidence to show compliance for PRC-016 ("Special Protection System Misoperation"). Can I also use it to show compliance for this Standard, PRC-005-2?
Maintaining evidence for operation of Special Protection Systems could concurrently be utilized as proof of the operation of the associated trip coil (provided one can be certain of the trip coil involved). Thus the reporting requirements that one may have to do for the Misoperation of a Special Protection Scheme under PRC-016 could work for the activity tracking requirements under this PRC-005-2.

I maintain disturbance records which show Protection System operations. Can I use these records to show compliance?
These records can be concurrently utilized as dc trip path verifications to the degree that they demonstrate the proper function of that dc trip path.

I maintain test reports on some of my components of my Protection System components. Can I use these test reports to show that I have verified a maintenance activity?
Yes.

16. References

1. Protection System Maintenance: A Technical Reference. Prepared by the System Protection and Controls Task Force of the NERC Planning Committee. Dated September 13, 2007.

2. "Predicating The Optimum Routine test Interval For Protection Relays," by J. J. Kumm, M.S. Weber, D. Hou, and E. O. Schweitzer, III, IEEE Transactions on Power Delivery, Vol. 10, No. 2, April 1995.

3. "Transmission Relay System Performance Comparison For 2000, 2001, 2002, 2003, 2004 and 2005," Working Group I17 of Power System Relaying Committee of IEEE Power Engineering Society, May 2006.

4. "A Survey of Relaying Test Practices," Special Report by WG I11 of Power System Relaying Committee of IEEE Power Engineering Society, September 16, 1999.

5. "Transmission Protective Relay System Performance Measuring Methodology," Working Group I3 of Power System Relaying Committee of IEEE Power Engineering Society, January 2002.

6. "Processes, Issues, Trends and Quality Control of Relay Settings," Working Group C3 of Power System Relaying Committee of IEEE Power Engineering Society, December 2006.

7. "Proposed Statistical Performance Measures for Microprocessor-Based Transmission-Line Protective Relays, Part I - Explanation of the Statistics, and Part II - Collection and Uses of Data," Working Group D5 of Power System Relaying Committee of IEEE Power Engineering Society, May 1995; Papers 96WM 016-6 PWRD and 96WM 127-1 PWRD, 1996 IEEE Power Engineering Society Winter Meeting.

8. "Analysis And Guidelines For Testing Numerical Protection Schemes," Final Report of CIGRE WG 34.10, August 2000.

9. "Use of Preventative Maintenance and System Performance Data to Optimize Scheduled Maintenance Intervals," H. Anderson, R. Loughlin, and J. Zipp, Georgia Tech Protective Relay Conference, May 1996.

PSMT SDT References

10. "Essentials of Statistics for Business and Economics" Anderson, Sweeney, Williams, 2003

11. "Introduction to Statistics and Data Analysis" - Second Edition, Peck, Olson, Devore, 2005

12. "Statistical Analysis for Business Decisions" Peters, Summers, 1968

Figures

Figure 1: Typical Transmission System

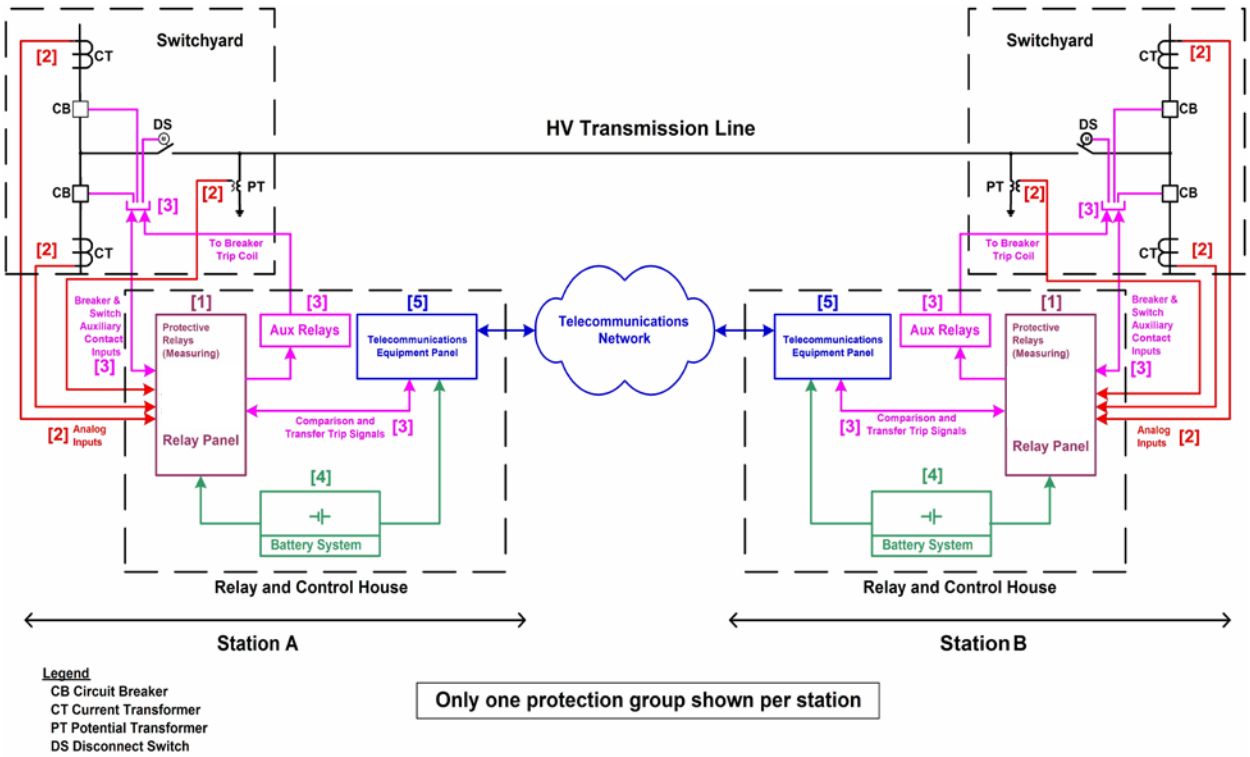

For information on components, see ***Figure 1 & 2 Legend – Components of Protection Systems***

~~(Return)~~

Figure 2: Typical Generation System

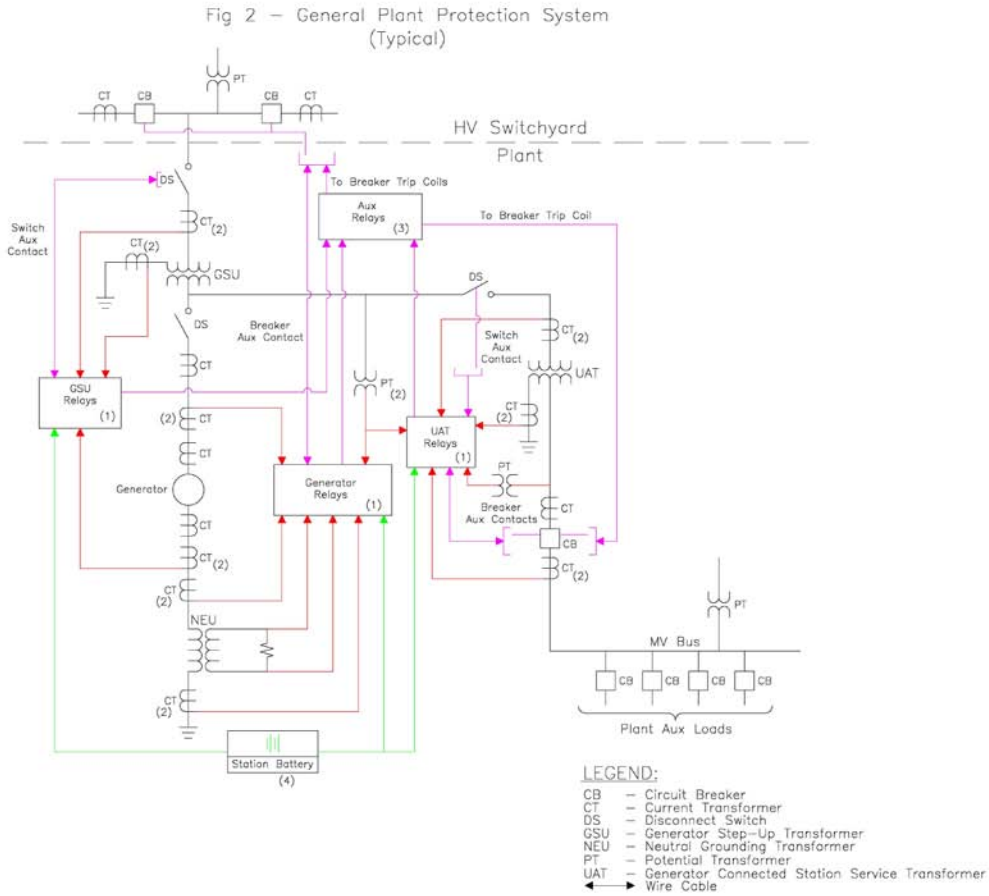

For information on components, see ***Figure 1 & 2 Legend – Components of Protection Systems***

~~(Return)~~

Figure 1 & 2 Legend – Components of Protection Systems

Number in Figure	Component of Protection System	Includes	Excludes
1	Protective relays which respond to electrical quantities	All protective relays that use current and/or voltage inputs from current & voltage sensors and that trip the 86, 94 or trip coil.	Devices that use non-electrical methods of operation including thermal, pressure, gas accumulation, and vibration. Any ancillary equipment not specified in the definition of Protection Systems. Control and/or monitoring equipment that is not a part of the automatic tripping action of the Protection System
2	Voltage and current sensing devices providing inputs to protective relays	The signals from the voltage & current sensing devices to the protective relay input.	Voltage & current sensing devices that are not a part of the Protection System, including sync-check systems, metering systems and data acquisition systems.
3	Control circuitry associated with protective functions	All control wiring (or other medium for conveying trip signals) associated with the tripping action of 86 devices, 94 devices or trip coils (from all parallel trip paths). This would include fiber-optic systems that carry a trip signal as well as hard-wired systems that carry trip current.	Closing circuits, SCADA circuits, other devices in control scheme not passing trip current
4	Station dc supply	Batteries and battery chargers and any control power system which has the function of supplying power to the protective relays, associated trip circuits and trip coils.	Any power supplies that are not used to power protective relays or their associated trip circuits and trip coils.
5	Communications systems necessary for correct operation of protective functions	Tele-protection equipment used to convey specific information, in the form of analog or digital signals, necessary for the correct operation of protective functions.	Any communications equipment that is not used to convey information necessary for the correct operation of protective functions.

(~~Return~~Additional information can be found in References

~~)~~

Appendix A

The following illustrates the concept of overlapping verifications and tests as summarized in Section 10 of the paper. As an example, Figure A-1 shows protection for a critical transmission line by carrier blocking directional comparison pilot relaying. The goal is to verify the ability of the entire two-terminal pilot protection scheme to protect for line faults, and to avoid over-tripping for faults external to the transmission line zone of protection bounded by the current transformer locations.

Figure A-1

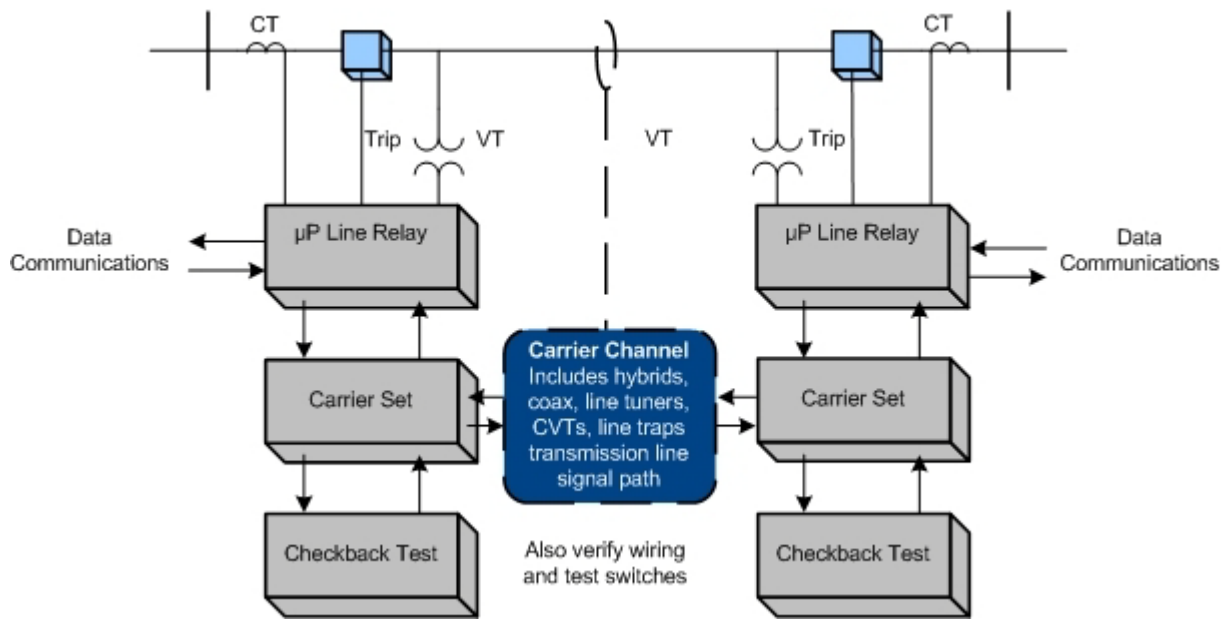

In this example (Figure A1), verification takes advantage of the self-monitoring features of microprocessor multifunction line relays at each end of the line. For each of the line relays themselves, the example assumes that the user has the following arrangements in place:

1. The relay has a data communications port that can be accessed from remote locations.
2. The relay has internal self-monitoring programs and functions that report failures of internal electronics, via communications messages or alarm contacts to SCADA.
3. The relays report loss of dc power, and the relays themselves or external monitors report the state of the dc battery supply.
4. The CT and PT inputs to the relays are used for continuous calculation of metered values of volts, amperes, plus Watts and VARs on the line. These metered values are

reported by data communications. For maintenance, the user elects to compare these readings to those of other relays, meters, or DFRs. The other readings may be from redundant relaying or measurement systems or they may be derived from values in other protection zones. Comparison with other such readings to within required relaying accuracy verifies Voltage & Current Sensing Devices, wiring, and analog signal input processing of the relays. One effective way to do this is to utilize the relay metered values directly in SCADA, where they can be compared with other references or state estimator values.

5. Breaker status indication from auxiliary contacts is verified in the same way as in (2). Status indications must be consistent with the flow or absence of current.
6. Continuity of the breaker trip circuit from dc bus through the trip coil is monitored by the relay and reported via communications.
7. Correct operation of the on-off carrier channel is also critical to security of the Protection System, so each carrier set has a connected or integrated automatic checkback test unit. The automatic checkback test runs several times a day. Newer carrier sets with integrated checkback testing check for received signal level and report abnormal channel attenuation or noise, even if the problem is not severe enough to completely disable the channel.

These monitoring activities plus the check-back test comprise automatic verification of all the Protection System elements that experience tells us are the most prone to fail. But, does this comprise a complete verification?

Figure A-2

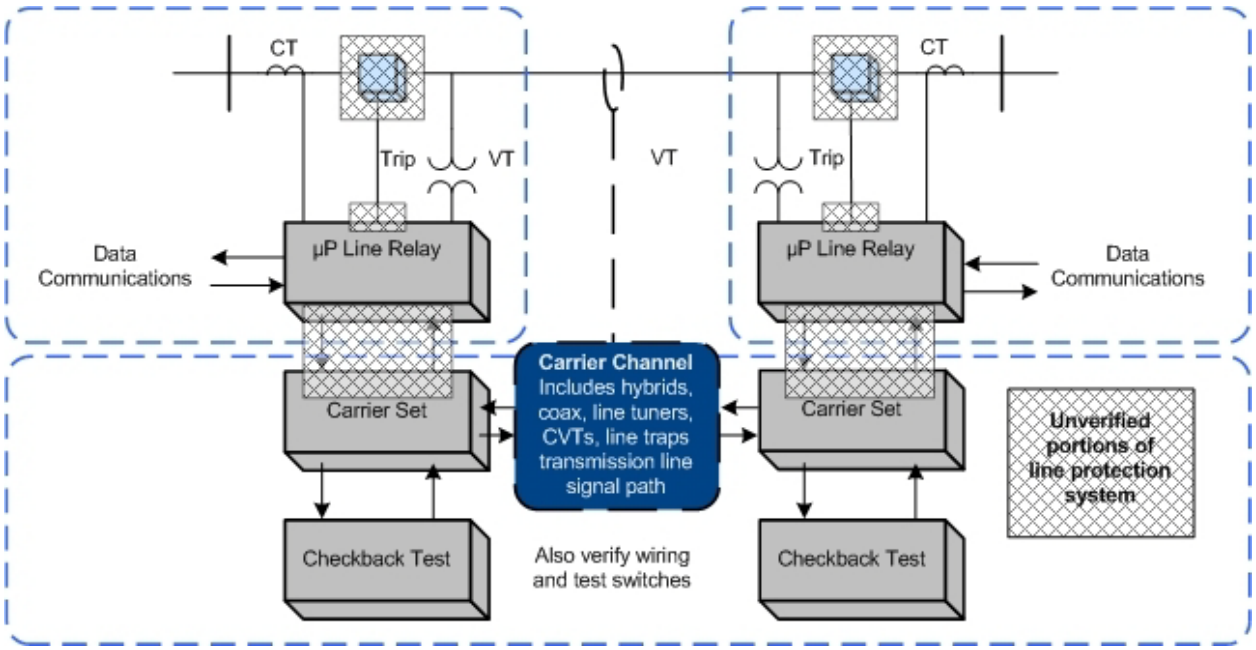

The dotted boxes of Figure A-2 show the sections of verification defined by the monitoring and verification practices just listed. These sections are not completely overlapping, and the shaded regions show elements that are not verified:

1. The continuity of trip coils is verified, but no means is provided for validating the ability of the circuit breaker to trip if the trip coil should be energized.
2. Within each line relay, all the microprocessors that participate in the trip decision have been verified by internal monitoring. However, the trip circuit is actually energized by the contacts of a small telephone-type "ice cube" relay within the line protective relay. The microprocessor energizes the coil of this ice cube relay through its output data port and a transistor driver circuit. There is no monitoring of the output port, driver circuit, ice cube relay, or contacts of that relay. These components are critical for tripping the circuit breaker for a fault.
3. The check-back test of the carrier channel does not verify the connections between the relaying microprocessor internal decision programs and the carrier transmitter keying circuit or the carrier receiver output state. These connections include microprocessor I/O ports, electronic driver circuits, wiring, and sometimes telephone-type auxiliary relays.
4. The correct states of breaker and disconnect switch auxiliary contacts are monitored, but this does not confirm that the state change indication is correct when the breaker or switch opens.

A practical solution for (1) and (2) is to observe actual breaker tripping, with a specified maximum time interval between trip tests. Clearing of naturally-occurring faults are demonstrations of operation that reset the time interval clock for testing of each breaker tripped in this way. If faults do not occur, manual tripping of the breaker through the relay trip output via data communications to the relay microprocessor meets the requirement for periodic testing.

PRC-005 does not address breaker maintenance, and its Protection System test requirements can be met by energizing the trip circuit in a test mode (breaker disconnected) through the relay microprocessor. This can be done via a front-panel button command to the relay logic, or application of a simulated fault with a relay test set. However, utilities have found that breakers often show problems during Protection System tests. It is recommended that Protection System verification include periodic testing of the actual tripping of connected circuit breakers.

Testing of the relay-carrier set interface in (3) requires that each relay key its transmitter, and that the other relay demonstrate reception of that blocking carrier. This can be observed from relay or DFR records during naturally occurring faults, or by a manual test. If the checkback test sequence were incorporated in the relay logic, the carrier sets and carrier channel are then included in the overlapping segments monitored by the two relays, and the monitoring gap is completely eliminated.

Appendix B — Protection System Maintenance Standard Drafting Team

Charles W. Rogers
Chairman
Consumers Energy Co.

John B. Anderson
Xcel Energy

Merle E. Ashton
Tri-State G&T

Corporation
Bob Bentert
Florida Power & Light Company

John Ciufo
Hydro One Inc

Sam Francis
Oncor

Carol A. Gerou
Midwest Reliability Organization

William D. Shultz
Southern Company Generation

Russell C. Hardison
Tennessee Valley Authority

David Harper
NRG Texas Maintenance Services

Mark Lucas
ComEd

Al McMeekin
NERC Staff
North American Electric Reliability

Mark Peterson
Great River Energy

Leonard Swanson, Jr
National Grid USA

Eric A. Udren
Quanta Technology

Philip B. Winston
Southern Company Transmission

John A. Zipp
ITC Holdings

A. Introduction

1. Title: **Transmission and Generation Protection System Maintenance and Testing**

2. Number: PRC-005-1

3. Purpose: To ensure all transmission and generation Protection Systems affecting the reliability of the Bulk Electric System (BES) are maintained and tested.

4. Applicability

4.1. Transmission Owner.

4.2. Generator Owner.

4.3. Distribution Provider that owns a transmission Protection System.

5. Effective Date: May 1, 2006

B. Requirements

R1. Each Transmission Owner and any Distribution Provider that owns a transmission Protection System and each Generator Owner that owns a generation Protection System shall have a Protection System maintenance and testing program for Protection Systems that affect the reliability of the BES. The program shall include:

R1.1. Maintenance and testing intervals and their basis.

R1.2. Summary of maintenance and testing procedures.

R2. Each Transmission Owner and any Distribution Provider that owns a transmission Protection System and each Generator Owner that owns a generation Protection System shall provide documentation of its Protection System maintenance and testing program and the implementation of that program to its Regional Reliability Organization on request (within 30 calendar days). The documentation of the program implementation shall include:

R2.1. Evidence Protection System devices were maintained and tested within the defined intervals.

R2.2. Date each Protection System device was last tested/maintained.

C. Measures

M1. Each Transmission Owner and any Distribution Provider that owns a transmission Protection System and each Generator Owner that owns a generation Protection System that affects the reliability of the BES, shall have an associated Protection System maintenance and testing program as defined in Requirement 1.

M2. Each Transmission Owner and any Distribution Provider that owns a transmission Protection System and each Generator Owner that owns a generation Protection System that affects the reliability of the BES, shall have evidence it provided documentation of its associated Protection System maintenance and testing program and the implementation of its program as defined in Requirement 2.

D. Compliance

1. Compliance Monitoring Process

1.1. Compliance Monitoring Responsibility

Regional Reliability Organization.

1.2. Compliance Monitoring Period and Reset Time Frame

One calendar year.

1.3. Data Retention

The Transmission Owner and any Distribution Provider that owns a transmission Protection System and each Generator Owner that owns a generation Protection System, shall retain evidence of the implementation of its Protection System maintenance and testing program for three years.

The Compliance Monitor shall retain any audit data for three years.

1.4. Additional Compliance Information

The Transmission Owner and any Distribution Provider that owns a transmission Protection System and the Generator Owner that owns a generation Protection System, shall each demonstrate compliance through self-certification or audit (periodic, as part of targeted monitoring or initiated by complaint or event), as determined by the Compliance Monitor.

2. Levels of Non-Compliance

2.1. Level 1: Documentation of the maintenance and testing program provided was incomplete as required in R1, but records indicate maintenance and testing did occur within the identified intervals for the portions of the program that were documented.

2.2. Level 2: Documentation of the maintenance and testing program provided was complete as required in R1, but records indicate that maintenance and testing did not occur within the defined intervals.

2.3. Level 3: Documentation of the maintenance and testing program provided was incomplete, and records indicate implementation of the documented portions of the maintenance and testing program did not occur within the identified intervals.

2.4. Level 4: Documentation of the maintenance and testing program, or its implementation, was not provided.

E. Regional Differences

None identified.

Version History

Version	Date	Action	Change Tracking
0	April 1, 2005	Effective Date	New
1	December 1, 2005	1. Changed incorrect use of certain hyphens (-) to “en dash” (–) and “em dash (—).” 2. Added “periods” to items where appropriate. 3. Changed “Timeframe” to “Time Frame” in item D, 1.2.	01/20/05

A. Introduction

1. Title: **Implementation and Documentation of Underfrequency Load Shedding Equipment Maintenance Program**

2. Number: PRC-008-0

3. Purpose: Provide last resort system preservation measures by implementing an Under Frequency Load Shedding (UFLS) program.

4. Applicability:

4.1. Transmission Owner required by its Regional Reliability Organization to have a UFLS program

4.2. Distribution Provider required by its Regional Reliability Organization to have a UFLS program

5. Effective Date: April 1, 2005

B. Requirements

R1. The Transmission Owner and Distribution Provider with a UFLS program (as required by its Regional Reliability Organization) shall have a UFLS equipment maintenance and testing program in place. This UFLS equipment maintenance and testing program shall include UFLS equipment identification, the schedule for UFLS equipment testing, and the schedule for UFLS equipment maintenance.

R2. The Transmission Owner and Distribution Provider with a UFLS program (as required by its Regional Reliability Organization) shall implement its UFLS equipment maintenance and testing program and shall provide UFLS maintenance and testing program results to its Regional Reliability Organization and NERC on request (within 30 calendar days).

C. Measures

M1. Each Transmission Owner's and Distribution Provider's UFLS equipment maintenance and testing program contains the elements specified in Reliability Standard PRC-007-0_R1.

M2. Each Transmission Owner and Distribution Provider shall have evidence that it provided the results of its UFLS equipment maintenance and testing program's implementation to its Regional Reliability Organization and NERC on request (within 30 calendar days).

D. Compliance

1. Compliance Monitoring Process

1.1. Compliance Monitoring Responsibility

Compliance Monitor: Regional Reliability Organization.

1.2. Compliance Monitoring Period and Reset Timeframe

On request (within 30 calendar days).

1.3. Data Retention

None specified.

1.4. Additional Compliance Information

None.

2. Levels of Non-Compliance

2.1. Level 1: Documentation of the maintenance and testing program was incomplete, but records indicate implementation was on schedule.

2.2. Level 2: Complete documentation of the maintenance and testing program was provided, but records indicate that implementation was not on schedule.

2.3. Level 3: Documentation of the maintenance and testing program was incomplete, and records indicate implementation was not on schedule.

2.4. Level 4: Documentation of the maintenance and testing program, or its implementation was not provided.

E. Regional Differences

1. None identified.

Version History

Version	Date	Action	Change Tracking
0	April 1, 2005	Effective Date	New

A. Introduction

1. Title: **Undervoltage Load Shedding System Maintenance and Testing**

2. Number: PRC-011-0

3. Purpose: Provide system preservation measures in an attempt to prevent system voltage collapse or voltage instability by implementing an Undervoltage Load Shedding (UVLS) program.

4. Applicability:

4.1. Transmission Owner that owns a UVLS system

4.2. Distribution Provider that owns a UVLS system

5. Effective Date: April 1, 2005

B. Requirements

R1. The Transmission Owner and Distribution Provider that owns a UVLS system shall have a UVLS equipment maintenance and testing program in place. This program shall include:

R1.1. The UVLS system identification which shall include but is not limited to:

R1.1.1. Relays.

R1.1.2. Instrument transformers.

R1.1.3. Communications systems, where appropriate.

R1.1.4. Batteries.

R1.2. Documentation of maintenance and testing intervals and their basis.

R1.3. Summary of testing procedure.

R1.4. Schedule for system testing.

R1.5. Schedule for system maintenance.

R1.6. Date last tested/maintained.

R2. The Transmission Owner and Distribution Provider that owns a UVLS system shall provide documentation of its UVLS equipment maintenance and testing program and the implementation of that UVLS equipment maintenance and testing program to its Regional Reliability Organization and NERC on request (within 30 calendar days).

C. Measures

M1. Each Transmission Owner and Distribution Provider that owns a UVLS system shall have documentation that its UVLS equipment maintenance and testing program conforms with Reliability Standard PRC-011-0_R1.

M2. Each Transmission Owner and Distribution Provider that owns a UVLS system shall have evidence it provided documentation of its UVLS equipment maintenance and testing program and the implementation of that UVLS equipment maintenance and testing program as specified in Reliability Standard PRC-011-0_R2.

D. Compliance

1. Compliance Monitoring Process

1.1. Compliance Monitoring Responsibility

Compliance Monitor: Regional Reliability Organization.

1.2. Compliance Monitoring Period and Reset Timeframe

On request (30 calendar days).

1.3. Data Retention

None specified.

1.4. Additional Compliance Information

None.

2. Levels of Non-Compliance

2.1. Level 1: Documentation of the maintenance and testing program was incomplete, but records indicate implementation was on schedule.

2.2. Level 2: Documentation of the maintenance and testing program was incomplete, but records indicate implementation was on schedule.

2.3. Level 3: Documentation of the maintenance and testing program was incomplete, and records indicate implementation was not on schedule.

2.4. Level 4: Documentation of the maintenance and testing program, or its implementation, was not provided.

E. Regional Differences

1. None identified.

Version History

Version	Date	Action	Change Tracking
0	April 1, 2005	Effective Date	New

A. Introduction

1. Title: **Special Protection System Maintenance and Testing**

2. Number: PRC-017-0

3. Purpose: To ensure that all Special Protection Systems (SPS) are properly designed, meet performance requirements, and are coordinated with other protection systems. To ensure that maintenance and testing programs are developed and misoperations are analyzed and corrected.

4. Applicability:

4.1. Transmission Owner that owns an SPS

4.2. Generator Owner that owns an SPS

4.3. Distribution Provider that owns an SPS

5. Effective Date: April 1, 2005

B. Requirements

R1. The Transmission Owner, Generator Owner, and Distribution Provider that owns an SPS shall have a system maintenance and testing program(s) in place. The program(s) shall include:

R1.1. SPS identification shall include but is not limited to:

R1.1.1. Relays.

R1.1.2. Instrument transformers.

R1.1.3. Communications systems, where appropriate.

R1.1.4. Batteries.

R1.2. Documentation of maintenance and testing intervals and their basis.

R1.3. Summary of testing procedure.

R1.4. Schedule for system testing.

R1.5. Schedule for system maintenance.

R1.6. Date last tested/maintained.

R2. The Transmission Owner, Generator Owner, and Distribution Provider that owns an SPS shall provide documentation of the program and its implementation to the appropriate Regional Reliability Organizations and NERC on request (within 30 calendar days).

C. Measures

M1. The Transmission Owner, Generator Owner, and Distribution Provider that owns an SPS shall have a system maintenance and testing program(s) in place that includes all items in Reliability Standard PRC-017-0_R1.

M2. The Transmission Owner, Generator Owner, and Distribution Provider that owns an SPS shall have evidence it provided documentation of the program and its implementation to the appropriate Regional Reliability Organizations and NERC on request (within 30 calendar days).

D. Compliance

1. Compliance Monitoring Process

1.1. Compliance Monitoring Responsibility

Compliance Monitor: Regional Reliability Organization. Each Region shall report compliance and violations to NERC via the NERC Compliance Reporting process.

Timeframe:
On request (30 calendar days.)

1.2. Compliance Monitoring Period and Reset Timeframe

Compliance Monitor: Regional Reliability Organization.

1.3. Data Retention

None specified.

1.4. Additional Compliance Information

None.

2. Levels of Non-Compliance

2.1. Level 1: Documentation of the maintenance and testing program was incomplete, but records indicate implementation was on schedule.

2.2. Level 2: Complete documentation of the maintenance and testing program was provided, but records indicate that implementation was not on schedule.

2.3. Level 3: Documentation of the maintenance and testing program was incomplete, and records indicate implementation was not on schedule.

2.4. Level 4: Documentation of the maintenance and testing program, or its implementation, was not provided.

E. Regional Differences

1. None identified.

Version History

Version	Date	Action	Change Tracking
0	April 1, 2005	Effective Date	New

NERC
NORTH AMERICAN ELECTRIC RELIABILITY CORPORATION

Standards Announcement

Project 2007-17 Protection System Maintenance and Testing Recirculation Ballot and Non-binding Poll Open June 20-30, 2011

Now available at: https://standards.nerc.net/CurrentBallots.aspx

Recirculation Ballot Window Open Until 8 p.m. Eastern on June 30, 2011

A recirculation ballot window for standard PRC-005-2 – Protection System Maintenance is open **until 8 p.m. Eastern on Thursday, June 30, 2011**.

The Protection System Maintenance and Testing Standard Drafting Team has made minor, non-substantive changes to PRC-005-2 Protection System Maintenance after reviewing comments received during a formal comment period and successive ballot that ended on May 13, 2011. In addition, the team made changes to the VSLs associated with PRC-005-2 to address feedback from a quality review. Because the changes made to the standard were not substantive, the Standards Committee has authorized posting the standard and associated implementation plan for a recirculation ballot. To provide an opportunity for stakeholders to cast their opinion on the revised VSLs, a concurrent non-binding poll of the VRFs and VSLs associated with PRC-005-2 will be conducted.

Instructions for Casting a Ballot and Non-binding Opinion

In the recirculation ballot, votes are counted by exception. Only members of the ballot pool may cast a ballot; all ballot pool members may change their prior votes. A ballot pool member who failed to cast a ballot during the last ballot window may cast a ballot in the recirculation ballot window. If a ballot pool member does not participate in the recirculation ballot, that member's last vote cast in the successive ballot that ended on May 13, 2011 will be carried over and used to determine if there are sufficient affirmative votes for this standard to pass.

Because the revisions to the VSLs were substantive, members of the ballot pool are asked to review the revised VSLs and cast a new opinion in the non-binding poll; in the non-binding poll opinions from the non-binding poll that ended on May 13, 2011 were not carried over.

Members of the ballot pool associated with this project may log in and submit their votes for the ballot and opinions for the non-binding poll from the following page: https://standards.nerc.net/CurrentBallots.aspx

Next Steps

Voting results will be posted and announced after the ballot window closes. If the standard is approved by a two-thirds majority, it will be submitted for adoption by the NERC Board of Trustees prior to filing with regulatory authorities for approval.

Background

The proposed PRC-005-2 – Protection System Maintenance standard addresses FERC directives from FERC Order 693, as well as issues identified by stakeholders. In accordance with the FERC directives, this draft

standard establishes requirements for a time-based maintenance program, where all relevant devices are maintained according to prescribed maximum intervals. It further establishes requirements for a condition-based maintenance program, where the hands-on maintenance intervals are adjusted to reflect the known and reported condition of the relevant devices. For a performance-based maintenance program, it ascertains where the hands-on maintenance intervals are adjusted to reflect the historical performance of the relevant devices.

Standards Process

The Standard Processes Manual contains all the procedures governing the standards development process. The success of the NERC standards development process depends on stakeholder participation. We extend our thanks to all those who participate.

For more information or assistance, please contact Monica Benson, Standards Process Administrator, at monica.benson@nerc.net or at 404-446-2560.

North American Electric Reliability Corporation
116-390 Village Blvd.
Princeton, NJ 08540
609.452.8060 | www.nerc.com

NERC
NORTH AMERICAN ELECTRIC RELIABILITY CORPORATION

Standards Announcement

Project 2007-17 Protection System Maintenance and Testing Recirculation Ballot and Non-binding Poll Results

Now available at: https://standards.nerc.net/Ballots.aspx

A recirculation ballot on PRC-005-2 Protection System Maintenance and a concurrent non-binding poll of associated VRF and VSLs concluded on June 30, 2011.

Ballot Results for Revisions to PRC-005-2

Voting statistics are listed below, and the Ballot Results Web page provides a link to the detailed results:

Quorum: 82.97 %
Approval: 64.76 %

Non-binding Poll Results for Associated VRF and VSLs

Of those who registered to participate, 52.63% provided an opinion or an abstention; 60% of those who provided an opinion indicated support for the VRFs and VSLs that were proposed.

Next Steps

The drafting team will review comments submitted with the recirculation ballot as well as comments submitted during the formal comment period and successive ballot that concluded May 13, 2011 to determine whether to revise the standard. If the drafting team makes substantive revisions, the standard will be posted for a 30-day formal comment period with a successive ballot conducted during the final 10 days of the comment period.

Background:

The proposed PRC-005-2 – Protection System Maintenance standard addresses FERC directives from FERC Order 693, as well as issues identified by stakeholders. In accordance with the FERC directives, this draft standard establishes requirements for a time-based maintenance program, where all relevant devices are maintained according to prescribed maximum intervals. It further establishes requirements for a condition-based maintenance program, where the hands-on maintenance intervals are adjusted to reflect the known and reported condition of the relevant devices. For a performance-based maintenance program, it ascertains where the hands-on maintenance intervals are adjusted to reflect the historical performance of the relevant devices.

Standards Process

The Standard Processes Manual contains all the procedures governing the standards development process. The success of the NERC standards development process depends on stakeholder participation. We extend our thanks to all those who participate.

For more information or assistance, please contact Monica Benson, Standards Process Administrator, at monica.benson@nerc.net or at 404-446-2560.

North American Electric Reliability Corporation
116-390 Village Blvd.
Princeton, NJ 08540
609.452.8060 | www.nerc.com

User Name

Password

Log in

Register

-Ballot Pools
-Current Ballots
-Ballot Results
-Registered Ballot Body
-Proxy Voters

Home Page

Ballot Results

Ballot Name:	Project 2007-17 PRC-005-2 SB_rc
Ballot Period:	6/20/2011 - 6/30/2011
Ballot Type:	recirculation
Total # Votes:	268
Total Ballot Pool:	323
Quorum:	**82.97 % The Quorum has been reached**
Weighted Segment Vote:	64.76 %
Ballot Results:	**The Standard has NOT Passed**

Summary of Ballot Results

Segment	Ballot Pool	Segment Weight	Affirmative # Votes	Affirmative Fraction	Negative # Votes	Negative Fraction	Abstain # Votes	No Vote
1 - Segment 1.	89	1	49	0.69	22	0.31	5	13
2 - Segment 2.	9	0.6	4	0.4	2	0.2	2	1
3 - Segment 3.	71	1	34	0.586	24	0.414	3	10
4 - Segment 4.	24	1	12	0.522	11	0.478	1	0
5 - Segment 5.	68	1	25	0.556	20	0.444	3	20
6 - Segment 6.	38	1	17	0.567	13	0.433	0	8
7 - Segment 7.	0	0	0	0	0	0	0	0
8 - Segment 8.	11	0.9	5	0.5	4	0.4	0	2
9 - Segment 9.	6	0.5	5	0.5	0	0	1	0
10 - Segment 10.	7	0.6	6	0.6	0	0	0	1
Totals	**323**	**7.6**	**157**	**4.921**	**96**	**2.679**	**15**	**55**

Individual Ballot Pool Results

Segment	Organization	Member	Ballot	Comments
1	Allegheny Power	Rodney Phillips		
1	Ameren Services	Kirit S. Shah	Negative	View
1	American Electric Power	Paul B. Johnson	Affirmative	View
1	American Transmission Company, LLC	Jason Shaver	Negative	View
1	Arizona Public Service Co.	Robert Smith	Negative	View
1	Associated Electric Cooperative, Inc.	John Bussman	Negative	View
1	Avista Corp.	Scott J Kinney	Affirmative	
1	Baltimore Gas & Electric Company	John J. Moraski	Affirmative	

1	BC Transmission Corporation	Gordon Rawlings	Affirmative	
1	Beaches Energy Services	Joseph S Stonecipher	Negative	View
1	Black Hills Corp	Eric Egge		
1	Bonneville Power Administration	Donald S. Watkins	Affirmative	
1	CenterPoint Energy	Paul Rocha	Negative	
1	Central Maine Power Company	Brian Conroy		
1	City of Vero Beach	Randall McCamish	Negative	
1	City Utilities of Springfield, Missouri	Jeff Knottek	Affirmative	
1	Clark Public Utilities	Jack Stamper	Affirmative	
1	Cleco Power LLC	Danny McDaniel		
1	Colorado Springs Utilities	Paul Morland	Negative	View
1	Commonwealth Edison Co.	Daniel Brotzman		
1	Consolidated Edison Co. of New York	Christopher L de Graffenried	Affirmative	
1	Dairyland Power Coop.	Robert W. Roddy	Abstain	
1	Dayton Power & Light Co.	Hertzel Shamash	Affirmative	
1	Deseret Power	James Tucker	Affirmative	
1	Dominion Virginia Power	John K Loftis	Affirmative	
1	Duke Energy Carolina	Douglas E. Hils	Negative	
1	East Kentucky Power Coop.	George S. Carruba	Affirmative	
1	Empire District Electric Co.	Ralph F Meyer	Affirmative	
1	Entergy Corporation	George R. Bartlett		
1	FirstEnergy Energy Delivery	Robert Martinko	Affirmative	View
1	Florida Keys Electric Cooperative Assoc.	Michael Anderson	Negative	View
1	Gainesville Regional Utilities	Luther E. Fair	Negative	View
1	GDS Associates, Inc.	Claudiu Cadar	Negative	View
1	Georgia Transmission Corporation	Harold Taylor	Affirmative	
1	Great River Energy	Gordon Pietsch	Affirmative	View
1	Hydro One Networks, Inc.	Ajay Garg	Affirmative	
1	Idaho Power Company	Ronald D. Schellberg	Affirmative	View
1	International Transmission Company Holdings Corp	Michael Moltane	Affirmative	View
1	Kansas City Power & Light Co.	Michael Gammon	Affirmative	
1	Keys Energy Services	Stanley T Rzad	Negative	
1	Lake Worth Utilities	Walt J Gill	Negative	
1	Lakeland Electric	Larry E Watt	Negative	View
1	Lincoln Electric System	Doug Bantam	Affirmative	
1	Long Island Power Authority	Robert Ganley	Affirmative	
1	Lower Colorado River Authority	Martyn Turner	Affirmative	
1	Manitoba Hydro	Joe D Petaski	Negative	View
1	Metropolitan Water District of Southern California	Ernest Hahn	Abstain	
1	MidAmerican Energy Co.	Terry Harbour	Affirmative	View
1	Minnesota Power, Inc.	Randi Woodward	Affirmative	
1	National Grid	Saurabh Saksena	Affirmative	View
1	Nebraska Public Power District	Richard L. Koch		
1	New York Power Authority	Arnold J. Schuff	Affirmative	View
1	Northeast Utilities	David Boguslawski	Affirmative	
1	NorthWestern Energy	John Canavan	Affirmative	View
1	Ohio Valley Electric Corp.	Robert Mattey	Negative	
1	Oklahoma Gas and Electric Co.	Marvin E VanBebber	Abstain	
1	Omaha Public Power District	Doug Peterchuck	Affirmative	
1	Orlando Utilities Commission	Brad Chase	Affirmative	
1	Otter Tail Power Company	Lawrence R. Larson		
1	Pacific Gas and Electric Company	Chifong Thomas		
1	PacifiCorp	Mark Sampson		
1	PECO Energy	Ronald Schloendorn	Affirmative	
1	Platte River Power Authority	John C. Collins	Affirmative	View
1	Potomac Electric Power Co.	David Thorne	Affirmative	View
1	PowerSouth Energy Cooperative	Larry D Avery	Affirmative	
1	PPL Electric Utilities Corp.	Brenda L Truhe	Affirmative	
1	Public Service Company of New Mexico	Laurie Williams		
1	Public Service Electric and Gas Co.	Kenneth D. Brown	Affirmative	
1	Public Utility District No. 1 of Chelan County	Chad Bowman	Affirmative	
1	Puget Sound Energy, Inc.	Catherine Koch		
1	Sacramento Municipal Utility District	Tim Kelley	Affirmative	
1	Salt River Project	Robert Kondziolka	Affirmative	
1	Santee Cooper	Terry L. Blackwell	Negative	View

1	SCE&G	Henry Delk, Jr.	Affirmative	
1	Seattle City Light	Pawel Krupa	Negative	View
1	South Texas Electric Cooperative	Richard McLeon	Negative	
1	Southern California Edison Co.	Dana Cabbell	Affirmative	
1	Southern Company Services, Inc.	Horace Stephen Williamson	Affirmative	
1	Southern Illinois Power Coop.	William G. Hutchison	Affirmative	
1	Southwest Transmission Cooperative, Inc.	James Jones	Abstain	
1	Southwestern Power Administration	Gary W Cox	Abstain	
1	Sunflower Electric Power Corporation	Noman Lee Williams		
1	Tennessee Valley Authority	Larry Akens	Negative	View
1	Tri-State G & T Association, Inc.	Keith V. Carman	Affirmative	View
1	Tucson Electric Power Co.	John Tolo	Negative	View
1	United Illuminating Co.	Jonathan Appelbaum	Affirmative	
1	Westar Energy	Allen Klassen	Affirmative	
1	Western Area Power Administration	Brandy A Dunn	Affirmative	
1	Xcel Energy, Inc.	Gregory L Pieper	Affirmative	
2	Alberta Electric System Operator	Mark B Thompson	Affirmative	
2	BC Transmission Corporation	Faramarz Amjadi	Affirmative	
2	Electric Reliability Council of Texas, Inc.	Charles B Manning	Abstain	
2	Independent Electricity System Operator	Kim Warren	Affirmative	
2	ISO New England, Inc.	Kathleen Goodman	Affirmative	
2	Midwest ISO, Inc.	Jason L. Marshall	Negative	View
2	New York Independent System Operator	Gregory Campoli		
2	PJM Interconnection, L.L.C.	Tom Bowe	Negative	View
2	Southwest Power Pool	Charles H Yeung	Abstain	
3	Alabama Power Company	Richard J. Mandes	Negative	View
3	Allegheny Power	Bob Reeping		
3	Ameren Services	Mark Peters	Negative	
3	American Electric Power	Raj Rana		
3	Arizona Public Service Co.	Thomas R. Glock	Negative	
3	Atlantic City Electric Company	James V. Petrella	Affirmative	
3	BC Hydro and Power Authority	Pat G. Harrington	Affirmative	
3	Bonneville Power Administration	Rebecca Berdahl	Negative	
3	Central Lincoln PUD	Steve Alexanderson	Affirmative	View
3	City of Bartow, Florida	Matt Culverhouse	Negative	View
3	City of Clewiston	Lynne Mila	Negative	
3	City of Farmington	Linda Jacobson	Affirmative	
3	City of Green Cove Springs	Gregg R Griffin	Negative	View
3	City of Leesburg	Phil Janik	Negative	
3	ComEd	Bruce Krawczyk	Affirmative	
3	Consolidated Edison Co. of New York	Peter T Yost	Affirmative	View
3	Consumers Energy	David A. Lapinski	Negative	View
3	Cowlitz County PUD	Russell A Noble	Affirmative	View
3	Delmarva Power & Light Co.	Michael R. Mayer	Affirmative	
3	Detroit Edison Company	Kent Kujala	Negative	
3	Dominion Resources Services	Michael F. Gildea	Affirmative	
3	Duke Energy Carolina	Henry Ernst-Jr	Negative	View
3	East Kentucky Power Coop.	Sally Witt	Affirmative	
3	Entergy	Joel T Plessinger	Negative	View
3	FirstEnergy Solutions	Kevin Querry	Affirmative	View
3	Florida Power Corporation	Lee Schuster	Affirmative	
3	Gainesville Regional Utilities	Kenneth Simmons	Negative	
3	Georgia Power Company	Anthony L Wilson	Negative	View
3	Georgia System Operations Corporation	Scott S. Barfield-McGinnis	Abstain	
3	Great River Energy	Sam Kokkinen	Affirmative	
3	Gulf Power Company	Gwen S Frazier	Affirmative	
3	Hydro One Networks, Inc.	Michael D. Penstone	Affirmative	
3	JEA	Garry Baker	Negative	View
3	Kansas City Power & Light Co.	Charles Locke	Affirmative	
3	Kissimmee Utility Authority	Gregory D Woessner	Negative	
3	Lakeland Electric	Mace Hunter	Negative	View
3	Lincoln Electric System	Bruce Merrill	Affirmative	
3	Los Angeles Department of Water & Power	Kenneth Silver		
3	Louisville Gas and Electric Co.	Charles A. Freibert	Abstain	
3	Manitoba Hydro	Greg C. Parent	Negative	View
3	MEAG Power	Steven Grego		
3	MidAmerican Energy Co.	Thomas C. Mielnik	Affirmative	View

3	Mississippi Power	Don Horsley	Negative	View
3	Municipal Electric Authority of Georgia	Steven M. Jackson	Affirmative	
3	Muscatine Power & Water	John S Bos	Affirmative	
3	New York Power Authority	Marilyn Brown	Affirmative	
3	Niagara Mohawk (National Grid Company)	Michael Schiavone	Affirmative	
3	Northern Indiana Public Service Co.	William SeDoris	Negative	View
3	Ocala Electric Utility	David Anderson	Negative	
3	Orlando Utilities Commission	Ballard K Mutters	Affirmative	
3	PacifiCorp	John Apperson	Affirmative	
3	PECO Energy an Exelon Co.	Vincent J. Catania		
3	Platte River Power Authority	Terry L Baker	Affirmative	View
3	Potomac Electric Power Co.	Robert Reuter	Affirmative	
3	Progress Energy Carolinas	Sam Waters		
3	Public Service Electric and Gas Co.	Jeffrey Mueller	Affirmative	
3	Public Utility District No. 1 of Chelan County	Kenneth R. Johnson	Negative	
3	Public Utility District No. 2 of Grant County	Greg Lange	Affirmative	View
3	Sacramento Municipal Utility District	James Leigh-Kendall	Affirmative	
3	Salem Electric	Anthony Schacher	Affirmative	
3	Salt River Project	John T. Underhill	Affirmative	
3	San Diego Gas & Electric	Scott Peterson		
3	Santee Cooper	Zack Dusenbury		
3	Seattle City Light	Dana Wheelock	Negative	View
3	Southern California Edison Co.	David Schiada	Affirmative	
3	Springfield Utility Board	Jeff Nelson	Abstain	
3	Tampa Electric Co.	Ronald L Donahey		
3	Tri-State G & T Association, Inc.	Janelle Marriott	Affirmative	View
3	Wisconsin Electric Power Marketing	James R Keller	Negative	View
3	Wisconsin Public Service Corp.	Gregory J Le Grave		
3	Xcel Energy, Inc.	Michael Ibold	Affirmative	
4	Alliant Energy Corp. Services, Inc.	Kenneth Goldsmith	Negative	View
4	American Municipal Power	Kevin Koloini	Negative	
4	American Public Power Association	Allen Mosher	Affirmative	
4	City of Clewiston	Kevin McCarthy	Negative	
4	City of New Smyrna Beach Utilities Commission	Tim Beyrle	Negative	
4	Consumers Energy	David Frank Ronk	Negative	View
4	Cowlitz County PUD	Rick Syring	Affirmative	View
4	Detroit Edison Company	Daniel Herring	Negative	
4	Florida Municipal Power Agency	Frank Gaffney	Negative	View
4	Fort Pierce Utilities Authority	Thomas W. Richards	Affirmative	
4	Georgia System Operations Corporation	Guy Andrews	Affirmative	View
4	Illinois Municipal Electric Agency	Bob C. Thomas	Negative	View
4	Integrys Energy Group, Inc.	Christopher Plante	Affirmative	
4	Madison Gas and Electric Co.	Joseph DePoorter	Affirmative	
4	Ohio Edison Company	Douglas Hohlbaugh	Affirmative	View
4	Old Dominion Electric Coop.	Mark Ringhausen	Affirmative	
4	Public Utility District No. 1 of Douglas County	Henry E. LuBean	Affirmative	View
4	Public Utility District No. 1 of Snohomish County	John D. Martinsen	Affirmative	
4	Sacramento Municipal Utility District	Mike Ramirez	Affirmative	
4	Seattle City Light	Hao Li	Negative	View
4	Seminole Electric Cooperative, Inc.	Steven R Wallace	Abstain	
4	South Mississippi Electric Power Association	Steve McElhaney	Negative	
4	Wisconsin Energy Corp.	Anthony Jankowski	Negative	View
4	Y-W Electric Association, Inc.	James A Ziebarth	Affirmative	View
5	AEP Service Corp.	Brock Ondayko	Affirmative	
5	Amerenue	Sam Dwyer	Negative	
5	APS	Mel Jensen	Negative	
5	Avista Corp.	Edward F. Groce	Affirmative	
5	Black Hills Corp	George Tatar	Affirmative	
5	Bonneville Power Administration	Francis J. Halpin	Affirmative	
5	Chelan County Public Utility District #1	John Yale	Affirmative	
5	City of Grand Island	Jeff Mead	Abstain	
5	City of Tallahassee	Alan Gale		
5	City Water, Light & Power of Springfield	Karl E. Kohlrus		
5	Consolidated Edison Co. of New York	Wilket (Jack) Ng	Affirmative	
5	Constellation Power Source Generation, Inc.	Amir Y Hammad	Negative	View

5	Consumers Energy	James B Lewis	Negative	View
5	Cowlitz County PUD	Bob Essex	Affirmative	View
5	Dominion Resources, Inc.	Mike Garton	Affirmative	
5	Duke Energy	Robert Smith		
5	Dynegy Inc.	Dan Roethemeyer	Affirmative	
5	East Kentucky Power Coop.	Stephen Ricker	Affirmative	
5	Energy Northwest - Columbia Generating Station	Doug Ramey		
5	Entegra Power Group, LLC	Kenneth Parker	Affirmative	View
5	Entergy Corporation	Stanley M Jaskot		
5	FirstEnergy Solutions	Kenneth Dresner	Affirmative	View
5	Florida Municipal Power Agency	David Schumann	Negative	View
5	Green Country Energy	Greg Froehling	Affirmative	
5	Horizon Wind Energy	Brent Hebert		
5	Indeck Energy Services, Inc.	Rex A Roehl	Negative	View
5	JEA	Donald Gilbert		
5	Kansas City Power & Light Co.	Scott Heidtbrink		
5	Kissimmee Utility Authority	Mike Blough	Negative	
5	Lakeland Electric	Thomas J Trickey		
5	Liberty Electric Power LLC	Daniel Duff	Affirmative	
5	Lincoln Electric System	Dennis Florom		
5	Louisville Gas and Electric Co.	Charlie Martin		
5	Luminant Generation Company LLC	Mike Laney	Affirmative	View
5	Manitoba Hydro	Mark Aikens	Negative	View
5	Massachusetts Municipal Wholesale Electric Company	David Gordon	Abstain	
5	New Harquahala Generating Co. LLC	Nicholas Q Hayes		
5	New York Power Authority	Gerald Mannarino	Affirmative	View
5	Northern Indiana Public Service Co.	Michael K Wilkerson		
5	Otter Tail Power Company	Stacie Hebert		
5	PacifiCorp	Sandra L. Shaffer	Affirmative	View
5	Portland General Electric Co.	Gary L Tingley		
5	PowerSouth Energy Cooperative	Tim Hattaway	Negative	
5	PPL Generation LLC	Mark A Heimbach		
5	Progress Energy Carolinas	Wayne Lewis	Affirmative	
5	PSEG Power LLC	Jerzy A Slusarz	Affirmative	View
5	Public Utility District No. 1 of Lewis County	Steven Grega	Negative	View
5	Reedy Creek Energy Services	Bernie Budnik	Negative	
5	RRI Energy	Thomas J. Bradish		
5	Sacramento Municipal Utility District	Bethany Hunter	Affirmative	
5	Salt River Project	Glen Reeves	Affirmative	
5	San Diego Gas & Electric	Daniel Baerman		
5	Santee Cooper	Lewis P Pierce	Negative	View
5	Seattle City Light	Michael J. Haynes	Negative	View
5	Seminole Electric Cooperative, Inc.	Brenda K. Atkins	Affirmative	
5	South Carolina Electric & Gas Co.	Richard Jones		
5	South Mississippi Electric Power Association	Jerry W Johnson		
5	Southern Company Generation	William D Shultz	Negative	View
5	Tampa Electric Co.	RJames Rocha	Negative	
5	Tenaska, Inc.	Scott M. Helyer	Negative	View
5	Tennessee Valley Authority	George T. Ballew	Negative	View
5	TransAlta Centralia Generation, LLC	Joanna Luong-Tran	Abstain	
5	Tri-State G & T Association, Inc.	Barry Ingold	Negative	View
5	U.S. Army Corps of Engineers	Melissa Kurtz	Negative	View
5	U.S. Bureau of Reclamation	Martin Bauer P.E.	Affirmative	View
5	Wisconsin Electric Power Co.	Linda Horn	Negative	View
5	Wisconsin Public Service Corp.	Leonard Rentmeester	Affirmative	
5	Xcel Energy, Inc.	Liam Noailles	Affirmative	
6	AEP Marketing	Edward P. Cox	Affirmative	View
6	Ameren Energy Marketing Co.	Jennifer Richardson	Negative	
6	Bonneville Power Administration	Brenda S. Anderson	Affirmative	
6	Cleco Power LLC	Matthew D Cripps		
6	Consolidated Edison Co. of New York	Nickesha P Carrol	Affirmative	
6	Constellation Energy Commodities Group	Brenda Powell	Negative	View
6	Dominion Resources, Inc.	Louis S. Slade	Affirmative	
6	Duke Energy Carolina	Walter Yeager	Negative	
6	Entergy Services, Inc.	Terri F Benoit	Negative	View

6	Eugene Water & Electric Board	Daniel Mark Bedbury	Affirmative	
6	Exelon Power Team	Pulin Shah	Affirmative	
6	FirstEnergy Solutions	Mark S Travaglianti	Affirmative	View
6	Florida Municipal Power Agency	Richard L. Montgomery	Negative	View
6	Florida Municipal Power Pool	Thomas E Washburn	Negative	View
6	Florida Power & Light Co.	Silvia P. Mitchell	Negative	
6	Great River Energy	Donna Stephenson		
6	Kansas City Power & Light Co.	Jessica L Klinghoffer	Affirmative	
6	Lakeland Electric	Paul Shipps	Negative	View
6	Lincoln Electric System	Eric Ruskamp	Affirmative	
6	Louisville Gas and Electric Co.	Daryn Barker		
6	Luminant Energy	Brad Jones	Affirmative	View
6	Manitoba Hydro	Daniel Prowse	Negative	View
6	New York Power Authority	Thomas Papadopoulos		
6	Northern Indiana Public Service Co.	Joseph O'Brien	Negative	View
6	Omaha Public Power District	David Ried	Affirmative	
6	OTP Wholesale Marketing	Bruce Glorvigen		
6	Platte River Power Authority	Carol Ballantine	Affirmative	
6	Progress Energy	John T Sturgeon	Affirmative	
6	PSEG Energy Resources & Trade LLC	James D. Hebson	Affirmative	
6	Public Utility District No. 1 of Chelan County	Hugh A. Owen	Affirmative	
6	RRI Energy	Trent Carlson		
6	Santee Cooper	Suzanne Ritter	Negative	View
6	Seattle City Light	Dennis Sismaet	Negative	View
6	Seminole Electric Cooperative, Inc.	Trudy S. Novak	Affirmative	
6	South Carolina Electric & Gas Co.	Matt H Bullard		
6	Tennessee Valley Authority	Marjorie S. Parsons	Negative	View
6	Western Area Power Administration - UGP Marketing	John Stonebarger		
6	Xcel Energy, Inc.	David F. Lemmons	Affirmative	
8		James A Maenner	Negative	
8		Merle Ashton	Affirmative	
8		Roger C Zaklukiewicz	Affirmative	
8		Kristina M. Loudermilk	Affirmative	View
8	Ascendant Energy Services, LLC	Raymond Tran		
8	JDRJC Associates	Jim D. Cyrulewski	Negative	
8	Pacific Northwest Generating Cooperative	Margaret Ryan	Negative	View
8	Power Energy Group LLC	Peggy Abbadini		
8	SPS Consulting Group Inc.	Jim R. Stanton	Affirmative	
8	Utility Services, Inc.	Brian Evans-Mongeon	Affirmative	
8	Volkmann Consulting, Inc.	Terry Volkmann	Negative	
9	California Energy Commission	William Mitchell Chamberlain	Affirmative	View
9	Commonwealth of Massachusetts Department of Public Utilities	Donald E. Nelson	Affirmative	
9	National Association of Regulatory Utility Commissioners	Diane J. Barney	Affirmative	
9	Oregon Public Utility Commission	Jerome Murray	Abstain	
9	Public Service Commission of South Carolina	Philip Riley	Affirmative	
9	Utah Public Service Commission	Ric Campbell	Affirmative	
10	Florida Reliability Coordinating Council	Linda Campbell	Affirmative	
10	Midwest Reliability Organization	Dan R Schoenecker		
10	New York State Reliability Council	Alan Adamson	Affirmative	
10	Northeast Power Coordinating Council, Inc.	Guy V. Zito	Affirmative	View
10	ReliabilityFirst Corporation	Jacquie Smith	Affirmative	View
10	SERC Reliability Corporation	Carter B. Edge	Affirmative	
10	Western Electricity Coordinating Council	Louise McCarren	Affirmative	View

Account Log-In/Register

Copyright © 2010 by the North American Electric Reliability Corporation. : All rights reserved.
A New Jersey Nonprofit Corporation

NERC
NORTH AMERICAN ELECTRIC RELIABILITY CORPORATION

Ballot Results	
Non-Binding Poll Name:	Project 2007-17_non-binding recirculation ballot June 20, 2011_in
Poll Period:	6/20/2011 - 6/30/2011
Total # Opinions:	170
Total Ballot Pool:	323
Ballot Summary:	52.63% of those who registered to participate provided an opinion or abstention; 60% of those who provided an opinion indicated support for the VRFs and VSLs that were proposed.

Individual Ballot Pool Results

Segment	Organization	Member	Ballot	Comments
1	Allegheny Power	Rodney Phillips		
1	Ameren Services	Kirit S. Shah	Negative	View
1	American Electric Power	Paul B. Johnson		
1	American Transmission Company, LLC	Jason Shaver	Abstain	
1	Arizona Public Service Co.	Robert Smith	Affirmative	
1	Associated Electric Cooperative, Inc.	John Bussman	Abstain	
1	Avista Corp.	Scott J Kinney	Affirmative	
1	Baltimore Gas & Electric Company	John J. Moraski		
1	BC Transmission Corporation	Gordon Rawlings	Abstain	
1	Beaches Energy Services	Joseph S Stonecipher	Negative	View
1	Black Hills Corp	Eric Egge		
1	Bonneville Power Administration	Donald S. Watkins	Affirmative	
1	CenterPoint Energy	Paul Rocha		
1	Central Maine Power Company	Brian Conroy		
1	City of Vero Beach	Randall McCamish	Negative	

1	City Utilities of Springfield, Missouri	Jeff Knottek		
1	Clark Public Utilities	Jack Stamper		
1	Cleco Power LLC	Danny McDaniel	Affirmative	
1	Colorado Springs Utilities	Paul Morland		
1	Commonwealth Edison Co.	Daniel Brotzman		
1	Consolidated Edison Co. of New York	Christopher L de Graffenried	Abstain	View
1	Dairyland Power Coop.	Robert W. Roddy	Abstain	
1	Dayton Power & Light Co.	Hertzel Shamash	Affirmative	
1	Deseret Power	James Tucker		
1	Dominion Virginia Power	John K Loftis	Abstain	
1	Duke Energy Carolina	Douglas E. Hils	Affirmative	
1	East Kentucky Power Coop.	George S. Carruba		
1	Empire District Electric Co.	Ralph F Meyer	Affirmative	
1	Entergy Corporation	George R. Bartlett		
1	FirstEnergy Energy Delivery	Robert Martinko		
1	Florida Keys Electric Cooperative Assoc.	Michael Anderson	Negative	
1	Gainesville Regional Utilities	Luther E. Fair	Abstain	
1	GDS Associates, Inc.	Claudiu Cadar		
1	Georgia Transmission Corporation	Harold Taylor	Affirmative	
1	Great River Energy	Gordon Pietsch		
1	Hydro One Networks, Inc.	Ajay Garg	Affirmative	
1	Idaho Power Company	Ronald D. Schellberg		
1	International Transmission Company Holdings Corp	Michael Moltane	Abstain	
1	Kansas City Power & Light Co.	Michael Gammon	Affirmative	

1	Keys Energy Services	Stanley T Rzad	Negative	
1	Lake Worth Utilities	Walt J Gill		
1	Lakeland Electric	Larry E Watt	Negative	
1	Lincoln Electric System	Doug Bantam		
1	Long Island Power Authority	Robert Ganley	Affirmative	
1	Lower Colorado River Authority	Martyn Turner	Affirmative	
1	Manitoba Hydro	Joe D Petaski		
1	Metropolitan Water District of Southern California	Ernest Hahn		
1	MidAmerican Energy Co.	Terry Harbour	Affirmative	
1	Minnesota Power, Inc.	Randi Woodward	Affirmative	
1	National Grid	Saurabh Saksena		
1	Nebraska Public Power District	Richard L. Koch		
1	New York Power Authority	Arnold J. Schuff	Affirmative	
1	Northeast Utilities	David Boguslawski	Affirmative	
1	NorthWestern Energy	John Canavan	Affirmative	
1	Ohio Valley Electric Corp.	Robert Mattey	Negative	
1	Oklahoma Gas and Electric Co.	Marvin E VanBebber	Abstain	
1	Omaha Public Power District	Doug Peterchuck	Affirmative	
1	Orlando Utilities Commission	Brad Chase	Affirmative	
1	Otter Tail Power Company	Lawrence R. Larson		
1	Pacific Gas and Electric Company	Chifong Thomas		
1	PacifiCorp	Mark Sampson		
1	PECO Energy	Ronald Schloendorn		
1	Platte River Power Authority	John C. Collins		

1	Potomac Electric Power Co.	David Thorne		
1	PowerSouth Energy Cooperative	Larry D Avery	Negative	
1	PPL Electric Utilities Corp.	Brenda L Truhe	Abstain	
1	Public Service Company of New Mexico	Laurie Williams		
1	Public Service Electric and Gas Co.	Kenneth D. Brown		
1	Public Utility District No. 1 of Chelan County	Chad Bowman	Abstain	
1	Puget Sound Energy, Inc.	Catherine Koch		
1	Sacramento Municipal Utility District	Tim Kelley	Abstain	
1	Salt River Project	Robert Kondziolka	Affirmative	
1	Santee Cooper	Terry L. Blackwell	Negative	View
1	SCE&G	Henry Delk, Jr.	Abstain	
1	Seattle City Light	Pawel Krupa		
1	South Texas Electric Cooperative	Richard McLeon	Negative	
1	Southern California Edison Co.	Dana Cabbell		
1	Southern Company Services, Inc.	Horace Stephen Williamson		
1	Southern Illinois Power Coop.	William G. Hutchison		
1	Southwest Transmission Cooperative, Inc.	James Jones	Abstain	
1	Southwestern Power Administration	Gary W Cox	Abstain	
1	Sunflower Electric Power Corporation	Noman Lee Williams		
1	Tennessee Valley Authority	Larry Akens	Abstain	
1	Tri-State G & T Association, Inc.	Keith Carman		
1	Tucson Electric Power Co.	John Tolo		
1	United Illuminating Co.	Jonathan Appelbaum	Affirmative	

1	Westar Energy	Allen Klassen		
1	Western Area Power Administration	Brandy A Dunn	Affirmative	
1	Xcel Energy, Inc.	Gregory L Pieper		
2	Alberta Electric System Operator	Mark B Thompson	Abstain	
2	BC Transmission Corporation	Faramarz Amjadi		
2	Electric Reliability Council of Texas, Inc.	Charles B Manning	Abstain	
2	Independent Electricity System Operator	Kim Warren	Negative	View
2	ISO New England, Inc.	Kathleen Goodman		
2	Midwest ISO, Inc.	Jason L. Marshall	Negative	
2	New York Independent System Operator	Gregory Campoli		
2	PJM Interconnection, L.L.C.	Tom Bowe		
2	Southwest Power Pool	Charles H Yeung		
3	Alabama Power Company	Richard J. Mandes	Affirmative	
3	Allegheny Power	Bob Reeping		
3	Ameren Services	Mark Peters	Negative	
3	American Electric Power	Raj Rana		
3	Arizona Public Service Co.	Thomas R. Glock	Affirmative	
3	Atlantic City Electric Company	James V. Petrella		
3	BC Hydro and Power Authority	Pat G. Harrington	Abstain	
3	Bonneville Power Administration	Rebecca Berdahl		
3	Central Lincoln PUD	Steve Alexanderson	Abstain	
3	City of Bartow, Florida	Matt Culverhouse	Negative	View
3	City of Clewiston	Lynne Mila	Negative	
3	City of Farmington	Linda Jacobson	Affirmative	

3	City of Green Cove Springs	Gregg R Griffin	Negative	View
3	City of Leesburg	Phil Janik	Negative	
3	ComEd	Bruce Krawczyk		
3	Consolidated Edison Co. of New York	Peter T Yost	Abstain	View
3	Consumers Energy	David A. Lapinski	Affirmative	
3	Cowlitz County PUD	Russell A Noble	Affirmative	View
3	Delmarva Power & Light Co.	Michael R. Mayer		
3	Detroit Edison Company	Kent Kujala		
3	Dominion Resources Services	Michael F. Gildea	Abstain	
3	Duke Energy Carolina	Henry Ernst-Jr	Affirmative	
3	East Kentucky Power Coop.	Sally Witt		
3	Entergy	Joel T Plessinger		
3	FirstEnergy Solutions	Kevin Querry		
3	Florida Power Corporation	Lee Schuster		
3	Gainesville Regional Utilities	Kenneth Simmons	Negative	
3	Georgia Power Company	Anthony L Wilson	Affirmative	
3	Georgia System Operations Corporation	Scott S. Barfield-McGinnis	Abstain	
3	Great River Energy	Sam Kokkinen		
3	Gulf Power Company	Gwen S Frazier		
3	Hydro One Networks, Inc.	Michael D. Penstone	Affirmative	
3	JEA	Garry Baker	Abstain	
3	Kansas City Power & Light Co.	Charles Locke	Affirmative	
3	Kissimmee Utility Authority	Gregory D Woessner	Negative	
3	Lakeland Electric	Mace Hunter	Negative	

3	Lincoln Electric System	Bruce Merrill		
3	Los Angeles Department of Water & Power	Kenneth Silver		
3	Louisville Gas and Electric Co.	Charles A. Freibert	Abstain	
3	Manitoba Hydro	Greg C. Parent		
3	MEAG Power	Steven Grego		
3	MidAmerican Energy Co.	Thomas C. Mielnik	Affirmative	
3	Mississippi Power	Don Horsley	Affirmative	
3	Municipal Electric Authority of Georgia	Steven M. Jackson		
3	Muscatine Power & Water	John S Bos	Affirmative	
3	New York Power Authority	Marilyn Brown	Affirmative	
3	Niagara Mohawk (National Grid Company)	Michael Schiavone		
3	Northern Indiana Public Service Co.	William SeDoris	Negative	
3	Ocala Electric Utility	David Anderson	Negative	
3	Orlando Utilities Commission	Ballard K Mutters	Abstain	
3	PacifiCorp	John Apperson	Abstain	
3	PECO Energy an Exelon Co.	Vincent J. Catania		
3	Platte River Power Authority	Terry L Baker	Affirmative	
3	Potomac Electric Power Co.	Robert Reuter		
3	Progress Energy Carolinas	Sam Waters		
3	Public Service Electric and Gas Co.	Jeffrey Mueller		
3	Public Utility District No. 1 of Chelan County	Kenneth R. Johnson	Abstain	
3	Public Utility District No. 2 of Grant County	Greg Lange	Affirmative	
3	Sacramento Municipal Utility District	James Leigh-Kendall	Abstain	

3	Salem Electric	Anthony Schacher		
3	Salt River Project	John T. Underhill	Affirmative	
3	San Diego Gas & Electric	Scott Peterson		
3	Santee Cooper	Zack Dusenbury		
3	Seattle City Light	Dana Wheelock		
3	Southern California Edison Co.	David Schiada	Affirmative	
3	Springfield Utility Board	Jeff Nelson	Abstain	
3	Tampa Electric Co.	Ronald L Donahey		
3	Tri-State G & T Association, Inc.	Janelle Marriott		
3	Wisconsin Electric Power Marketing	James R Keller		
3	Wisconsin Public Service Corp.	Gregory J Le Grave	Affirmative	
3	Xcel Energy, Inc.	Michael Ibold		
4	Alliant Energy Corp. Services, Inc.	Kenneth Goldsmith	Affirmative	
4	American Municipal Power	Kevin Koloini	Negative	
4	American Public Power Association	Allen Mosher	Abstain	
4	City of Clewiston	Kevin McCarthy	Negative	
4	City of New Smyrna Beach Utilities Commission	Tim Beyrle	Negative	
4	Consumers Energy	David Frank Ronk		
4	Cowlitz County PUD	Rick Syring	Affirmative	
4	Detroit Edison Company	Daniel Herring	Negative	
4	Florida Municipal Power Agency	Frank Gaffney	Negative	View
4	Fort Pierce Utilities Authority	Thomas W. Richards		
4	Georgia System Operations Corporation	Guy Andrews	Abstain	
4	Illinois Municipal Electric Agency	Bob C. Thomas	Abstain	

4	Integrys Energy Group, Inc.	Christopher Plante	Abstain	
4	Madison Gas and Electric Co.	Joseph DePoorter	Abstain	
4	Ohio Edison Company	Douglas Hohlbaugh		
4	Old Dominion Electric Coop.	Mark Ringhausen	Affirmative	
4	Public Utility District No. 1 of Douglas County	Henry E. LuBean		
4	Public Utility District No. 1 of Snohomish County	John D. Martinsen	Abstain	
4	Sacramento Municipal Utility District	Mike Ramirez	Abstain	
4	Seattle City Light	Hao Li		
4	Seminole Electric Cooperative, Inc.	Steven R Wallace		
4	South Mississippi Electric Power Association	Steven McElhaney		
4	Wisconsin Energy Corp.	Anthony Jankowski	Negative	
4	Y-W Electric Association, Inc.	James A Ziebarth		
5	AEP Service Corp.	Brock Ondayko	Negative	View
5	Amerenue	Sam Dwyer	Negative	
5	APS	Mel Jensen	Affirmative	
5	Avista Corp.	Edward F. Groce	Affirmative	
5	Black Hills Corp	George Tatar		
5	Bonneville Power Administration	Francis J. Halpin	Affirmative	
5	Chelan County Public Utility District #1	John Yale	Abstain	
5	City of Grand Island	Jeff Mead	Abstain	
5	City of Tallahassee	Alan Gale		
5	City Water, Light & Power of Springfield	Karl E. Kohlrus		
5	Consolidated Edison Co. of New	Wilket (Jack) Ng	Abstain	View

	York			
5	Constellation Power Source Generation, Inc.	Amir Y Hammad	Abstain	
5	Consumers Energy	James B Lewis		
5	Cowlitz County PUD	Bob Essex	Affirmative	
5	Dominion Resources, Inc.	Mike Garton	Abstain	
5	Duke Energy	Robert Smith		
5	Dynegy Inc.	Dan Roethemeyer	Affirmative	
5	East Kentucky Power Coop.	Stephen Ricker		
5	Energy Northwest - Columbia Generating Station	Doug Ramey		
5	Entegra Power Group, LLC	Kenneth Parker		
5	Entergy Corporation	Stanley M Jaskot		
5	FirstEnergy Solutions	Kenneth Dresner		
5	Florida Municipal Power Agency	David Schumann	Negative	View
5	Green Country Energy	Greg Froehling		
5	Horizon Wind Energy	Brent Hebert		
5	Indeck Energy Services, Inc.	Rex A Roehl	Negative	
5	JEA	Donald Gilbert		
5	Kansas City Power & Light Co.	Scott Heidtbrink		
5	Kissimmee Utility Authority	Mike Blough	Negative	
5	Lakeland Electric	Thomas J Trickey		
5	Liberty Electric Power LLC	Daniel Duff	Negative	
5	Lincoln Electric System	Dennis Florom		
5	Louisville Gas and Electric Co.	Charlie Martin		
5	Luminant Generation Company LLC	Mike Laney	Affirmative	

5	Manitoba Hydro	Mark Aikens		
5	Massachusetts Municipal Wholesale Electric Company	David Gordon	Abstain	
5	New Harquahala Generating Co. LLC	Nicholas Q Hayes		
5	New York Power Authority	Gerald Mannarino		
5	Northern Indiana Public Service Co.	Michael K Wilkerson		
5	Otter Tail Power Company	Stacie Hebert		
5	PacifiCorp	Sandra L. Shaffer	Affirmative	
5	Portland General Electric Co.	Gary L Tingley		
5	PowerSouth Energy Cooperative	Tim Hattaway		
5	PPL Generation LLC	Mark A Heimbach		
5	Progress Energy Carolinas	Wayne Lewis		
5	PSEG Power LLC	Jerzy A Slusarz		
5	Public Utility District No. 1 of Lewis County	Steven Grega		
5	Reedy Creek Energy Services	Bernie Budnik		
5	RRI Energy	Thomas J. Bradish		
5	Sacramento Municipal Utility District	Bethany Hunter	Abstain	
5	Salt River Project	Glen Reeves	Affirmative	
5	San Diego Gas & Electric	Daniel Baerman		
5	Santee Cooper	Lewis P Pierce	Negative	View
5	Seattle City Light	Michael J. Haynes		
5	Seminole Electric Cooperative, Inc.	Brenda K. Atkins	Affirmative	
5	South Carolina Electric & Gas Co.	Richard Jones		
5	South Mississippi Electric Power Association	Jerry W Johnson		

5	Southern Company Generation	William D Shultz	Affirmative	
5	Tampa Electric Co.	RJames Rocha		
5	Tenaska, Inc.	Scott M Helyer		
5	Tennessee Valley Authority	George T. Ballew	Abstain	
5	TransAlta Centralia Generation, LLC	Joanna Luong-Tran		
5	Tri-State G & T Association, Inc.	Barry Ingold	Negative	
5	U.S. Army Corps of Engineers	Melissa Kurtz		
5	U.S. Bureau of Reclamation	Martin Bauer P.E.		
5	Wisconsin Electric Power Co.	Linda Horn	Negative	
5	Wisconsin Public Service Corp.	Leonard Rentmeester	Affirmative	
5	Xcel Energy, Inc.	Liam Noailles		
6	AEP Marketing	Edward P. Cox	Negative	View
6	Ameren Energy Marketing Co.	Jennifer Richardson	Negative	View
6	Bonneville Power Administration	Brenda S. Anderson	Affirmative	
6	Cleco Power LLC	Matthew D Cripps		
6	Consolidated Edison Co. of New York	Nickesha P Carrol	Abstain	View
6	Constellation Energy Commodities Group	Brenda Powell	Negative	
6	Dominion Resources, Inc.	Louis S. Slade	Abstain	
6	Duke Energy Carolina	Walter Yeager	Affirmative	
6	Entergy Services, Inc.	Terri F Benoit	Negative	View
6	Eugene Water & Electric Board	Daniel Mark Bedbury	Affirmative	
6	Exelon Power Team	Pulin Shah		
6	FirstEnergy Solutions	Mark S Travaglianti		
6	Florida Municipal Power Agency	Richard L. Montgomery	Negative	View

6	Florida Municipal Power Pool	Thomas E Washburn	Negative	View
6	Florida Power & Light Co.	Silvia P. Mitchell	Abstain	
6	Great River Energy	Donna Stephenson		
6	Kansas City Power & Light Co.	Jessica L Klinghoffer	Affirmative	
6	Lakeland Electric	Paul Shipps	Negative	View
6	Lincoln Electric System	Eric Ruskamp		
6	Louisville Gas and Electric Co.	Daryn Barker		
6	Luminant Energy	Brad Jones		
6	Manitoba Hydro	Daniel Prowse		
6	New York Power Authority	Thomas Papadopoulos		
6	Northern Indiana Public Service Co.	Joseph O'Brien	Negative	
6	Omaha Public Power District	David Ried	Affirmative	
6	OTP Wholesale Marketing	Bruce Glorvigen		
6	Platte River Power Authority	Carol Ballantine	Affirmative	
6	Progress Energy	John T Sturgeon		
6	PSEG Energy Resources & Trade LLC	James D. Hebson		
6	Public Utility District No. 1 of Chelan County	Hugh A. Owen		
6	RRI Energy	Trent Carlson		
6	Santee Cooper	Suzanne Ritter	Negative	View
6	Seattle City Light	Dennis Sismaet	Negative	View
6	Seminole Electric Cooperative, Inc.	Trudy S. Novak	Affirmative	
6	South Carolina Electric & Gas Co.	Matt H Bullard		
6	Tennessee Valley Authority	Marjorie S. Parsons	Abstain	
6	Western Area Power Administration - UGP Marketing	John Stonebarger		

6	Xcel Energy, Inc.	David F. Lemmons		
8		James A Maenner	Abstain	
8		Merle Ashton	Affirmative	
8		Roger C Zaklukiewicz	Affirmative	
8		Kristina M. Loudermilk		
8	Ascendant Energy Services, LLC	Raymond Tran		
8	JDRJC Associates	Jim D. Cyrulewski		
8	Pacific Northwest Generating Cooperative	Margaret Ryan	Abstain	
8	Power Energy Group LLC	Peggy Abbadini		
8	SPS Consulting Group Inc.	Jim R. Stanton	Affirmative	
8	Utility Services, Inc.	Brian Evans-Mongeon		
8	Volkmann Consulting, Inc.	Terry Volkmann	Affirmative	
9	California Energy Commission	William Mitchell Chamberlain		
9	Commonwealth of Massachusetts Department of Public Utilities	Donald E. Nelson	Affirmative	
9	National Association of Regulatory Utility Commissioners	Diane J. Barney	Affirmative	
9	Oregon Public Utility Commission	Jerry Murray		
9	Public Service Commission of South Carolina	Philip Riley	Affirmative	
9	Utah Public Service Commission	Ric Campbell	Affirmative	
10	Florida Reliability Coordinating Council	Linda Campbell		
10	Midwest Reliability Organization	Dan R Schoenecker		
10	New York State Reliability Council	Alan Adamson	Affirmative	
10	Northeast Power Coordinating Council, Inc.	Guy V. Zito		

10	ReliabilityFirst Corporation	Jacquie Smith	Affirmative	
10	SERC Reliability Corporation	Carter B. Edge	Abstain	
10	Western Electricity Coordinating Council	Louise McCarren		

Standard Development Roadmap

This section is maintained by the drafting team during the development of the standard and will be removed when the standard becomes effective.

Development Steps Completed:

1. Standards Committee approves posting SAR and draft standard on August 11, 2011

Description of Current Draft:
This is the first draft of the Standard. This standard merges previous standards PRC-005-1, PRC-005-1a, PRC-008-0, PRC-011-0, and PRC-017-0. It also addresses FERC comments from Order 693, and addresses observations from the NERC System Protection and Control Task Force, as presented in *NERC SPCTF Assessment of Standards: PRC-005-1 — Transmission and Generation Protection System Maintenance and Testing, PRC-008-0 — Underfrequency Load Shedding Equipment Maintenance Programs, PRC-011-0 — UVLS System Maintenance and Testing, PRC-017-0 — Special Protection System Maintenance and Testing.*

Future Development Plan:

Anticipated Actions	Anticipated Date
1. Post for combined 45-day comment and ballot.	September – October, 2011
2. Conduct initial ballot	October, 2011
3. Drafting Team Responds to Comments	November – December, 2011

Definitions of Terms Used in Standard

This section includes all newly defined or revised terms used in the proposed standard. Terms already defined in the Reliability Standards Glossary of Terms are not repeated here. New or revised definitions listed below become approved when the proposed standard is approved. When the standard becomes effective, these defined terms will be removed from the individual standard and added to the Glossary.

Protection System Maintenance Program (PSMP) — An ongoing program by which Protection System components are kept in working order and proper operation of malfunctioning components is restored. A maintenance program for a specific component includes one or more of the following activities:

- Verify — Determine that the component is functioning correctly.
- Monitor — Observe the routine in-service operation of the component.
- Test — Apply signals to a component to observe functional performance or output behavior, or to diagnose problems.
- Inspect — Detect visible signs of component failure, reduced performance and degradation.
- Calibrate — Adjust the operating threshold or measurement accuracy of a measuring element to meet the intended performance requirement.

Protection System (NERC Board of Trustees Approved Definition)

- Protective relays which respond to electrical quantities,
- Communications systems necessary for correct operation of protective functions,
- Voltage and current sensing devices providing inputs to protective relays,
- Station dc supply associated with protective functions (including station batteries, battery chargers, and non-battery-based dc supply), and
- Control circuitry associated with protective functions through the trip coil(s) of the circuit breakers or other interrupting devices.

The following terms are defined for use only within PRC-005-2, and should remain with the standard upon approval rather than being moved to the Glossary of Terms.

Unresolved Maintenance Issue – A deficiency that cannot be corrected during the performance of the maintenance activity and requires follow-up corrective action.

Segment – Protection Systems or components of a consistent design standard, or a particular model or type from a single manufacturer that typically share other common elements. Consistent performance is expected across the entire population of a segment. A segment must contain at least sixty (60) individual components.

Component Type - Any one of the five specific elements of the Protection System definition.

Component – A component is any individual discrete piece of equipment included in a Protection System, including but not limited to a protective relay or current sensing device. The designation of what constitutes a control circuit component is very dependent upon how an entity performs and tracks the testing of the control circuitry. Some entities test their control circuits on a breaker basis whereas others test their circuitry on a local zone of protection basis. Thus, entities are allowed the latitude to designate their own definitions of control circuit components. Another example of where the entity has some

discretion on determining what constitutes a single component is the voltage and current sensing devices, where the entity may choose either to designate a full three-phase set of such devices or a single device as a single component.

Countable Event – A component which has failed and requires repair or replacement, any condition discovered during the maintenance activities in Tables 1-1 through 1-5 and Table 3 which requires corrective action, or a Misoperation attributed to hardware failure or calibration failure. Misoperations due to product design errors, software errors, relay settings different from specified settings, Protection System component configuration errors, or Protection System application errors are not included in Countable Events.

A. Introduction

1. Title: **Protection System Maintenance**

2. Number: PRC-005-2

3. Purpose: To document and implement programs for the maintenance of all Protection Systems affecting the reliability of the Bulk Electric System (BES) so that these Protection Systems are kept in working order.

4. Applicability:

4.1. Functional Entities:

4.1.1 Transmission Owners

4.1.2 Generator Owners

4.1.3 Distribution Providers

4.2. Facilities:

4.2.1 Protection Systems that are installed for the purpose of detecting faults on BES Elements (lines, buses, transformers, etc.)

4.2.2 Protection Systems used for underfrequency load-shedding systems installed per ERO underfrequency load-shedding requirements.

4.2.3 Protection Systems used for undervoltage load-shedding systems installed to prevent system voltage collapse or voltage instability for BES reliability.

4.2.4 Protection Systems installed as a Special Protection System (SPS) for BES reliability.

4.2.5 Protection Systems for generator Facilities that are part of the BES, including:

4.2.5.1 Protection Systems that act to trip the generator either directly or via generator lockout or auxiliary tripping relays.

4.2.5.2 Protection Systems for generator step-up transformers for generators that are part of the BES.

4.2.5.3 Protection Systems for transformers connecting aggregated generation, where the aggregated generation is part of the BES (e.g., transformers connecting facilities such as wind-farms to the BES).

4.2.5.4 Protection Systems for generator-connected station service transformers for generators that are part of the BES.

5. Effective Date: See Implementation Plan

B. Requirements

R1. Each Transmission Owner, Generator Owner, and Distribution Provider shall establish a Protection System Maintenance Program (PSMP) for its Protection Systems identified in Section 4.2. *Violation Risk Factor: Medium] [Time Horizon: Long Term Planning]*

The PSMP shall:

1.1. Address all Protection System **component types.**

1.2. Identify which maintenance method (time-based,

Component Type *- Any one of the five specific elements of the Protection System definition.*

performance-based (per PRC-005 Attachment A), or a combination) is used to address each Protection System component type. All batteries associated with the station dc supply component type of a Protection System shall be included in a time-based program as described in Table 1-4 and Table 3.

1.3. Identify the associated maintenance intervals for time-based programs, to be no less frequent than the intervals established in Table 1-1 through 1-5, Table 2, and Table 3.

1.4. Include all applicable monitoring attributes and related maintenance activities applied to each Protection System component type consistent with the maintenance intervals specified in Tables 1-1 through 1-5, Table 2, and Table 3.

Unresolved Maintenance Issue - *A deficiency that cannot be corrected during the performance of the maintenance activity and requires follow-up corrective action.*

R2. Each Transmission Owner, Generator Owner, and Distribution Provider that uses performance-based maintenance intervals in its PSMP shall follow the procedure established in PRC-005 Attachment A to establish and maintain its performance-based intervals. *[Violation Risk Factor: Medium] [Time Horizon: Operations Planning]*

R3. Each Transmission Owner, Generator Owner, and Distribution Provider shall implement and follow its PSMP and initiate resolution of any **unresolved maintenance issues**. *[Violation Risk Factor: High] [Time Horizon: Operations Planning]*

C. Measures

M1. Each Transmission Owner, Generator Owner and Distribution Provider shall have a current documented Protection System Maintenance Program that addresses all component types of its Protection Systems, as required by Requirement R1. For each Protection System component type, the documentation shall include the type of maintenance program applied (time-based, performance-based, or a combination of these maintenance methods), maintenance activities, maintenance intervals, and, for component types that use monitoring to extend the intervals, the appropriate monitoring attributes as specified in Requirement R1, Parts 1.1 through 1.4.

M2. Each Transmission Owner, Generator Owner, and Distribution Provider that uses a performance-based maintenance program shall have evidence that its current performance-based maintenance program is in accordance with Requirement R2, which may include but is not limited to equipment lists, dated maintenance records, and dated analysis records and results.

M3. Each Transmission Owner, Generator Owner, and Distribution Provider shall have evidence that it has implemented the Protection System Maintenance Program and initiated resolution of unresolved maintenance issues in accordance with Requirement R3, which may include but is not limited to dated maintenance records, dated maintenance summaries, dated check-off lists, dated inspection records, or dated work orders.

D. Compliance

1. Compliance Monitoring Process

1.1. Compliance Monitoring Responsibility

Regional Entity

1.2. Compliance Monitoring and Enforcement Processes:

Compliance Audits
Self-Certifications
Spot Checking
Compliance Violation Investigations
Self-Reporting
Complaints

1.3. Data Retention

The Transmission Owner, Generator Owner, and Distribution Provider shall each keep data or evidence to demonstrate compliance as identified below unless directed by its Compliance Enforcement Authority to retain specific evidence for a longer period of time as part of an investigation.

For Requirement R1, the Transmission Owner, Generator Owner, and Distribution Provider shall each keep its current dated Protection System Maintenance Program including the documentation that specifies the type of maintenance program applied for each Protection System component type.

For Requirement R2 and Requirement R3, the Transmission Owner, Generator Owner, and Distribution Provider shall each keep documentation of the two most recent performances of each distinct maintenance activity for the Protection System **components**, or all performances of each distinct maintenance activity for the Protection System component since the previous scheduled audit date, whichever is longer.

The Compliance Enforcement Authority shall keep the last periodic audit report and all requested and submitted subsequent compliance records.

Component – *A component is any individual discrete piece of equipment included in a Protection System, including but not limited to a protective relay or current sensing device. The designation of what constitutes a control circuit component is very dependent upon how an entity performs and tracks the testing of the control circuitry. Some entities test their control circuits on a breaker basis whereas others test their circuitry on a local zone of protection basis. Thus, entities are allowed the latitude to designate their own definitions of control circuit components. Another example of where the entity has some discretion on determining what constitutes a single component is the voltage and current sensing devices, where the entity may choose either to designate a full three-phase set of such devices or a single device as a single component.*

1.4. Additional Compliance Information

None.

2. Violation Severity Levels

Requirement Number	Lower VSL	Moderate VSL	High VSL	Severe VSL
R1	The responsible entity's PSMP failed to specify whether one component type is being addressed by time-based or performance-based maintenance, or a combination of both. (Part 1.2)	The responsible entity's PSMP failed to address one component type included in the definition of 'Protection System' (Part 1.1) OR The responsible entity's PSMP failed to specify whether two component types are being addressed by time-based or performance-based maintenance, or a combination of both. (Part 1.2)	The responsible entity's PSMP failed to address two component types included in the definition of 'Protection System' (Part 1.1) OR The responsible entity's PSMP failed to include station batteries in a time-based program (Part 1.2) OR The responsible entity failed to include all maintenance activities or intervals relevant for the identified monitoring attributes specified in Tables 1-1 through 1-5, Table 2, and Table 3. (Part 1.3 and 1.4)	The responsible entity has not established a PSMP. OR The responsible entity's PSMP failed to address three or more component types included in the definition of 'Protection System' (Part 1.1) OR The responsible entity failed to specify whether three or more component types are being addressed by time-based or performance-based maintenance, or a combination of both. (Part 1.2).
R2	The responsible entity uses performance-based maintenance intervals in its PSMP but has: 1) Failed to reduce countable events to less than 4% within three years. OR 2) Failed to annually document program activities, results, maintenance dates, or countable events for 5% or less of components in any individual segment.	NA	The responsible entity uses performance-based maintenance intervals in its PSMP but has failed to reduce countable events to less than 4% within four years.	The responsible entity uses performance-based maintenance intervals in its PSMP but has: 1) Failed to establish the entire technical justification described within R2 for the initial use of the performance-based PSMP OR 2) Failed to reduce countable events to less than 4% within five years OR 3) Failed to annually document program activities, results, maintenance dates, or countable

Requirement Number	Lower VSL	Moderate VSL	High VSL	Severe VSL
				events for over 5% of components in any individual segment OR 4) Maintained a segment with less than 60 components OR 5) Failed to: • Annually update the list of components, OR • Perform maintenance on the greater of 5% of the segment population or 3 components, OR • Annually analyze the program activities and results for each segment.
R3	The responsible entity has failed to implement and follow scheduled program on 5% or less of total Protection System components. OR The responsible entity has failed to initiate resolution on 5% or less of unresolved maintenance issues.	The responsible entity has failed to implement and follow scheduled program on greater than 5%, but no more than 10% of total Protection System components. OR The responsible entity has failed to initiate resolution on greater than 5%, but less than or equal to 10% of unresolved maintenance issues.	The responsible entity has failed to implement and follow scheduled program on greater than 10%, but no more than 15% of total Protection System components. OR The responsible entity has failed to initiate resolution on greater than 10%, but less than or equal to 15% of unresolved maintenance issues.	The responsible entity has failed to implement and follow scheduled program on greater than 15% of total Protection System components. OR The responsible entity has failed to initiate resolution on greater than 15% of unresolved maintenance issues.

E. Regional Variances

None

F. Supplemental Reference Document

The following documents present a detailed discussion about determination of maintenance intervals and other useful information regarding establishment of a maintenance program..

1. PRC-005-2 Protection System Maintenance Supplementary Reference and FAQ — July 2011.

Version History

Version	Date	Action	Change Tracking
2	TBD	Complete revision, absorbing maintenance requirements from PRC-005-1, PRC-005-1a, PRC-008-0, PRC-011-0, PRC-017	Complete revision

Table 1-1 Component Type - Protective Relay Excluding distributed UFLS and UVLS (see Table 3)		
Component Attributes	**Maximum Maintenance Interval**[1]	**Maintenance Activities**
Any unmonitored protective relay not having all the monitoring attributes of a category below.	6 calendar years	Verify that settings are as specified For non-microprocessor relays: • Test and, if necessary calibrate For microprocessor relays: • Verify operation of the relay inputs and outputs that are essential to proper functioning of the Protection System. • Verify acceptable measurement of power system input values.
Monitored microprocessor protective relay with the following: • Internal self diagnosis and alarming (see Table 2). • Voltage and/or current waveform sampling three or more times per power cycle, and conversion of samples to numeric values for measurement calculations by microprocessor electronics. • Alarming for power supply failure (see Table 2).	12 calendar years	Verify: • Settings are as specified. • Operation of the relay inputs and outputs that are essential to proper functioning of the Protection System. • Acceptable measurement of power system input values.

[1] For the tables in this standard, a calendar year starts on the first day of a new year (January 1) after a maintenance activity has been completed. For the tables in this standard, a calendar month starts on the first day of the first month after a maintenance activity has been completed.

Monitored microprocessor protective relay with preceding row attributes and the following: • Ac measurements are continuously verified by comparison to an independent ac measurement source, with alarming for excessive error. (See Table 2) • Some or all binary or status inputs and control outputs are monitored by a process that continuously demonstrates ability to perform as designed, with alarming for failure. (See Table 2) • Alarming for change of settings. (See Table 2)	12 calendar years	Verify only the unmonitored relay inputs and outputs that are essential to proper functioning of the Protection System.

Table 1-2 Component Type - Communications Systems Excluding distributed UFLS and UVLS (see Table 3)		
Component Attributes	**Maximum Maintenance Interval**	**Maintenance Activities**
Any unmonitored communications system necessary for correct operation of protective functions, and not having all the monitoring attributes of a category below.	4 calendar months	Verify that the communications system is functional.
	6 calendar years	Verify that the channel meets performance criteria pertinent to the communications technology applied (e.g. signal level, reflected power, or data error rate). Verify essential signals to and from other Protection System components.

Any communications system with continuous monitoring or periodic automated testing for the presence of the channel function, and alarming for loss of function. (See Table 2)	12 calendar years	Verify that the channel meets performance criteria pertinent to the communications technology applied (e.g. signal level, reflected power, or data error rate). Verify essential signals to and from other Protection System components.
Any communications system with continuous monitoring or periodic automated testing for the performance of the channel using criteria pertinent to the communications technology applied (e.g. signal level, reflected power, or data error rate, and alarming for excessive performance degradation). (See Table 2)	No periodic maintenance specified	None.

Table 1-3 Component Type - Voltage and Current Sensing Devices Providing Inputs to Protective Relays Excluding distributed UFLS and UVLS (see Table 3)		
Component Attributes	**Maximum Maintenance Interval**	**Maintenance Activities**
Any voltage and current sensing devices not having monitoring attributes of the category below.	12 calendar years	Verify that current and voltage signal values are provided to the protective relays.
Voltage and Current Sensing devices connected to microprocessor relays with AC measurements are continuously verified by comparison of sensing input value, as measured by the microprocessor relay, to an independent ac measurement source, with alarming for unacceptable error or failure (see Table 2).	No periodic maintenance specified	None.

Table 1-4(a) Component Type – Protection System Station dc Supply Using Vented Lead-Acid (VLA) Batteries Excluding distributed UFLS and UVLS (see Table 3)		
Component Attributes	**Maximum Maintenance Interval**	**Maintenance Activities**
Protection System Station dc supply using **Vented Lead-Acid (VLA) batteries** not having monitoring attributes of Table 1-4(f). Protection System Station dc supply for non-BES interrupting devices for SPS or non-distributed UVLS systems are excluded (see Table 1-4(e)).	4 Calendar Months	Verify: • Station dc supply voltage Inspect: • Electrolyte level • For unintentional grounds
	18 Calendar Months	Verify: • Float voltage of battery charger • Battery continuity • Battery terminal connection resistance • Battery intercell or unit-to-unit connection resistance Inspect: • Cell condition of all individual battery cells where cells are visible – or measure battery cell/unit internal ohmic values where the cells are not visible • Physical condition of battery rack
	18 Calendar Months -or- 6 Calendar Years	Verify that the station battery can perform as designed by evaluating the measured cell/unit internal ohmic values to station battery baseline. -or- Verify that the station battery can perform as designed by conducting a performance, service, or modified performance capacity test of the entire battery bank.

Table 1-4(b) Component Type – Protection System Station dc Supply Using Valve-Regulated Lead-Acid (VRLA) Batteries Excluding distributed UFLS and UVLS (see Table 3)		
Component Attributes	**Maximum Maintenance Interval**	**Maintenance Activities**
Protection System Station dc supply **with Valve Regulated Lead-Acid (VRLA) batteries** not having monitoring attributes of Table 1-4(f). Station dc supply for non-BES interrupting devices for SPS or non-distributed UFLS and UVLS systems are excluded (see Table 1-4(e)).	4 Calendar Months	Verify: • Station dc supply voltage Inspect: • For unintentional grounds
	6 Calendar Months	Inspect: • Condition of all individual units by measuring battery cell/unit internal ohmic values.
	18 Calendar Months	Verify: • Float voltage of battery charger • Battery continuity • Battery terminal connection resistance • Battery intercell or unit-to-unit connection resistance Inspect: • Physical condition of battery rack
	6 Calendar Months -or- 3 Calendar Years	Verify that the station battery can perform as designed by evaluating the measured cell/unit internal ohmic values to station battery baseline. -or- Verify that the station battery can perform as designed by conducting a performance, service, or modified performance capacity test of the entire battery bank

Table 1-4(c) Component Type – Protection System Station dc Supply Using Nickel-Cadmium (NiCad) Batteries Excluding UFLS and non-distributed UVLS (see Table 3)		
Component Attributes	**Maximum Maintenance Interval**	**Maintenance Activities**
Protection System Station dc supply **Nickel-Cadmium (NiCad) batteries** not having monitoring attributes of Table 1-4(f). Station dc supply for non-BES interrupting devices for SPS or non-distributed UFLS and UVLS systems are excluded (see Table 1-4(e)).	4 Calendar Months	Verify: • Station dc supply voltage Inspect: • Electrolyte level • For unintentional grounds
	18 Calendar Months	Verify: • Float voltage of battery charger • Battery continuity • Battery terminal connection resistance • Battery intercell or unit-to-unit connection resistance Inspect: • Cell condition of all individual battery cells. • Physical condition of battery rack
	6 Calendar Years	Verify that the station battery can perform as designed by conducting a performance service, or modified performance capacity test of the entire battery bank.

Table 1-4(d) Component Type – Protection System Station dc Supply Using Non Battery Based Energy Storage Excluding UFLS and distributed UVLS (see Table 3)		
Component Attributes	**Maximum Maintenance Interval**	**Maintenance Activities**
Any Protection System station dc supply not using a battery and not having monitoring attributes of Table 1-4(f). Protection System Station dc supply for non-BES interrupting devices for SPS or non-distributed UFLS and UVLS systems are excluded (see Table 1-4(e)).	4 Calendar Months	Verify: • Station dc supply voltage Inspect: • For unintentional grounds
	18 Calendar Months	Inspect: Condition of non-battery based dc supply
	6 Calendar Years	Verify that the dc supply can perform as designed when ac power is not present.

Table 1-4(e) Component Type – Protection System Station dc Supply for non-BES Interrupting Device for SPS and non-distributed UVLS and UFLS systems		
Component Attributes	**Maximum Maintenance Interval**	**Maintenance Activities**
Any Protection System dc supply for tripping only non-BES interrupting devices as part of a SPS or non-distributed UVLS and UFLS system and not having monitoring attributes of Table 1-4(f).	When control circuits are verified (See Table 1-5)	Verify Station dc supply voltage

Table 1-4(f) Exclusions for Protection System Station dc Supply Monitoring Devices and Systems		
Component Attributes	**Maximum Maintenance Interval**	**Maintenance Activities**
Any station dc supply with high and low voltage monitoring and alarming of the battery charger voltage to detect charger overvoltage and charger failure. (See Table 2)	No periodic maintenance specified	No periodic verification of station dc supply voltage is required.
Any battery based station dc supply with electrolyte level monitoring and alarming in every cell (See Table 2)		No periodic inspection of the electrolyte level for each cell is required.
Any station dc supply with unintentional dc ground monitoring and alarming (See Table 2)		No periodic inspection of unintentional dc grounds is required.
Any station dc supply with charger float voltage monitoring and alarming to ensure correct float voltage is being applied on the station dc supply (See Table 2)		No periodic verification of float voltage of battery charger is required
Any battery based station dc supply with monitoring and alarming of battery string continuity (See Table 2)		No periodic verification of the battery continuity is required.
Any battery based station dc supply with monitoring and alarming of the intercell and/or terminal connection detail resistance of the entire battery (See Table 2)		No periodic verification of the intercell and terminal connection resistance is required.
Any lead acid battery based station dc supply with internal ohmic value monitoring, and evaluating present values relative to baseline internal ohmic values for every cell/unit (See Table 2)		.No periodic measurement and evaluation relative to baseline of battery cell/unit internal ohmic values is required to verify the station battery can perform as designed .
Any Valve Regulated Lead-Acid (VRLA) station battery with monitoring and alarming of each cell/unit internal Ohmic value. (See Table 2)		No periodic inspection of the condition of all individual units by measuring battery cell/unit internal ohmic values of a station VRLA battery is required.

Table 1-5 Component Type - Control Circuitry Associated With Protective Functions Excluding distributed UFLS and UVLS (see Table 3) **Note:** Table requirements apply to all Control Circuitry components of Protection Systems, and SPSs except as noted.		
Component Attributes	**Maximum Maintenance Interval**	**Maintenance Activities**
Trip coils or actuators of circuit breakers, interrupting devices, or mitigating devices	6 calendar years	Verify that each trip coil is able to operate the circuit breaker, interrupting device, or mitigating device.
Unmonitored control circuitry associated with SPS	12 calendar years	Verify all paths of the control circuits essential for proper operation of the SPS.
Electromechanical lockout and/or tripping auxiliary devices which are directly in a trip path from the protective relay to the interrupting device trip coil.	6 calendar years	Verify electrical operation of electromechanical trip and auxiliary devices.
Unmonitored control circuitry associated with protective functions.	12 calendar years	Verify all paths of the trip circuits through the trip coil(s) of the circuit breakers or other interrupting devices.
Control circuitry whose continuity and energization or ability to operate are monitored and alarmed (See Table 2).	No periodic maintenance specified	None.

Table 2 – Alarming Paths and Monitoring In Tables 1-1 through 1-5, alarm attributes used to justify extended maximum maintenance intervals and/or reduced maintenance activities are subject to the following maintenance requirements		
Component Attributes	**Maximum Maintenance Interval**	**Maintenance Activities**
Any alarm path through which alarms in Tables 1-1 through 1-5 are conveyed from the alarm origin to the location where corrective action can be initiated, and not having all the attributes of the "Alarm Path with monitoring" category below. Alarms are reported within 24 hours of DETECTION to a location where corrective action can be initiated.	12 Calendar Years	Verify that the alarm path conveys alarm signals to a location where corrective action can be initiated.
Alarm Path with monitoring: The location where corrective action is taken receives an alarm within 24 hours for failure of any portion of the alarming path from the alarm origin to the location where corrective action can be initiated.	No periodic maintenance specified	None.

Table 3 Maintenance Activities and Intervals for distributed UFLS and UVLS Systems		
Component Attributes	**Maximum Maintenance Interval**	**Maintenance Activities**
Any unmonitored protective relay not having all the monitoring attributes of a category below.	6 calendar years	Verify that settings are as specified For non-microprocessor relays: • Test and, if necessary calibrate For microprocessor relays: • Verify operation of the relay inputs and outputs that are essential to proper functioning of the Protection System. • Verify acceptable measurement of power system input values.
Monitored microprocessor protective relay with the following: • Internal self diagnosis and alarming (See Table 2). • Voltage and/or current waveform sampling three or more times per power cycle, and conversion of samples to numeric values for measurement calculations by microprocessor electronics. Alarming for power supply failure (See Table 2).	12 calendar years	Verify: • Settings are as specified. • Operation of the relay inputs and outputs that are essential to proper functioning of the Protection System. • Acceptable measurement of power system input values.

Monitored microprocessor protective relay with preceding row attributes and the following: • Ac measurements are continuously verified by comparison to an independent ac measurement source, with alarming for excessive error. (See Table 2) • Some or all binary or status inputs and control outputs are monitored by a process that continuously demonstrates ability to perform as designed, with alarming for failure. (See Table 2) Alarming for change of settings. (See Table 2)	12 calendar years	Verify only the unmonitored relay inputs and outputs that are essential to proper functioning of the Protection System.
Voltage and/or current sensing devices associated with UFLS or UVLS systems.	12 calendar years	Verify that current and/or voltage signal values are provided to the protective relays.
Protection System dc supply for tripping only non-BES interrupting devices as part of a UFLS or UVLS system.	12 calendar years	Verify Protection System dc supply voltage
Control circuitry between the UFLS or UVLS relays and electromechanical lockout and/or tripping auxiliary devices.	12 calendar years	Verify the path from the relay to the lockout and/or tripping auxiliary relay (including essential supervisory logic).
Electromechanical lockout and/or tripping auxiliary devices associated only with UFLS or UVLS systems.	12 calendar years	Verify electrical operation of electromechanical lockout and/or tripping auxiliary devices.
Control circuitry between the electromechanical lockout and/or tripping auxiliary devices and the non-BES interrupting devices in UFLS or UVLS systems, or between UFLS or UVLS relays (with no interposing electromechanical lockout or auxiliary device) and the non-BES interrupting devices.	No periodic maintenance specified	None.
Trip coils of non-BES interrupting devices in UFLS or UVLS systems.	No periodic maintenance specified	None.

PRC-005 — Attachment A

Criteria for a Performance-Based Protection System Maintenance Program

Purpose: To establish a technical basis for initial and continued use of a performance-based Protection System Maintenance Program (PSMP).

To establish the technical justification for the initial use of a performance-based PSMP:

1. Develop a list with a description of components included in each designated segment of the Protection System component population, with a minimum **segment** population of 60 components.
2. Maintain the components in each segment according to the time-based maximum allowable intervals established in Tables 1-1 through 1-5 and Table 3 until results of maintenance activities for the segment are available for a minimum of 30 individual components of the segment.

> **Segment** – *Protection Systems or components of a consistent design standard, or a particular model or type from a single manufacturer that typically share other common elements. Consistent performance is expected across the entire population of a segment. A segment must contain at least sixty (60) individual components.*

3. Document the maintenance program activities and results for each segment, including maintenance dates and countable events for each included component.
4. Analyze the maintenance program activities and results for each segment to determine the overall performance of the segment and develop maintenance intervals.
5. Determine the maximum allowable maintenance interval for each segment such that the segment experiences **countable events** on no more than 4% of the components within the segment, for the greater of either the last 30 components maintained or all components maintained in the previous year.

> **Countable Event** – *A component which has failed and requires repair or replacement, any condition discovered during the maintenance activities in Tables 1-1 through 1-5 and Table 3 which requires corrective action, or a Misoperation attributed to hardware failure or calibration failure. Misoperations due to product design errors, software errors, relay settings different from specified settings, Protection System component configuration errors, or Protection System application errors are not included in Countable Events.*

To maintain the technical justification for the ongoing use of a performance-based PSMP:

1. At least annually, update the list of Protection System components and segments and/or description if any changes occur within the segment.
2. Perform maintenance on the greater of 5% of the components (addressed in the performance based PSMP) in each segment or 3 individual components within the segment in each year.
3. For the prior year, analyze the maintenance program activities and results for each segment to determine the overall performance of the segment.

4. Using the prior year's data, determine the maximum allowable maintenance interval for each segment such that the segment experiences countable events on no more than 4% of the components within the segment, for the greater of either the last 30 components maintained or all components maintained in the previous year.
5. If the components in a Protection System segment maintained through a performance-based PSMP experience 4% or more countable events, develop, document, and implement an action plan to reduce the countable events to less than 4% of the segment population within 3 years.

Standard Development Roadmap

This section is maintained by the drafting team during the development of the standard and will be removed when the standard becomes effective.

Development Steps Completed:

1. Standards Committee approves ~~SAR for~~ posting SAR and draft standard on ~~June 5, 2007~~August 11, 2011.
2. ~~The SAR was posted for comment from June 11, 2007–July 10, 2007.~~
3. ~~The SC approves development of the standard on August 13, 2007.~~
4. ~~First posting of revised standard on July 24, 2009.~~
5. ~~Second posting of revised standard on June 11, 2010~~
6. ~~Third posting of revised standard on November 17, 2010~~
7. ~~Fourth posting of revised standard on April 13, 2011~~

Description of Current Draft:

This is the ~~fifth~~ first draft of the Standard. This standard merges previous standards PRC-005-1, PRC-005-1a, PRC-008-0, PRC-011-0, and PRC-017-0. It also addresses FERC comments from Order 693, and addresses observations from the NERC System Protection and Control Task Force, as presented in *NERC SPCTF Assessment of Standards: PRC-005-1 — Transmission and Generation Protection System Maintenance and Testing, PRC-008-0 — Underfrequency Load Shedding Equipment Maintenance Programs, PRC-011-0 — UVLS System Maintenance and Testing, PRC-017-0 — Special Protection System Maintenance and Testing.*

Future Development Plan:

Anticipated Actions	Anticipated Date
1. Post for combined ~~30~~45-day comment and ballot.	~~July~~ September ~~5~~ – ~~August~~ October~~4~~, 2011
2. Conduct ~~successive~~ initial ballot	~~July~~ October~~26 – August 4~~, 2011
3. Drafting Team Responds to Comments	~~August~~ November~~4~~ – Dec~~Sept~~ember ~~6~~, 2011

Definitions of Terms Used in Standard

This section includes all newly defined or revised terms used in the proposed standard. Terms already defined in the Reliability Standards Glossary of Terms are not repeated here. New or revised definitions listed below become approved when the proposed standard is approved. When the standard becomes effective, these defined terms will be removed from the individual standard and added to the Glossary.

Protection System Maintenance Program (PSMP) — An ongoing program by which Protection System components are kept in working order and proper operation of malfunctioning components is restored. A maintenance program for a specific component includes one or more of the following activities:

- Verify — Determine that the component is functioning correctly.
- Monitor — Observe the routine in-service operation of the component.
- Test — Apply signals to a component to observe functional performance or output behavior, or to diagnose problems.
- Inspect — Detect visible signs of component failure, reduced performance and degradation.
- Calibrate — Adjust the operating threshold or measurement accuracy of a measuring element to meet the intended performance requirement.

Protection System (NERC Board of Trustees Approved Definition)

- Protective relays which respond to electrical quantities,
- ~~communications~~ Communications systems necessary for correct operation of protective functions,
- ~~voltage~~ Voltage and current sensing devices providing inputs to protective relays,
- ~~station~~ Station dc supply associated with protective functions (including station batteries, battery chargers, and non-battery-based dc supply), and
- ~~control~~ Control circuitry associated with protective functions through the trip coil(s) of the circuit breakers or other interrupting devices.

The following terms are defined for use only within PRC-005-2, and should remain with the standard upon approval rather than being moved to the Glossary of Terms.

~~Maintenance Correctable~~Unresolved Maintenance Issue – ~~Failure of a component to operate within design parameters such that the~~A deficiency that cannot be corrected during the performance of the maintenance activity~~. Therefore this issue~~ and requires follow-up corrective action.

Segment – Protection Systems or components ~~-~~of a consistent design standard, or a particular model or type from a single manufacturer that typically share other common elements. Consistent performance is expected across the entire population of a segment. A segment must contain at least sixty (60) individual components.

Component Type - Any one of the five specific elements of the Protection System definition.

Component – A component ~~-~~is any individual discrete piece of equipment included in a Protection System, including but not limited to a protective relay or current sensing device. The designation of what constitutes a control circuit component is very dependent upon how an entity performs and tracks the testing of the control circuitry. Some entities test their control circuits on a breaker basis whereas others

test their circuitry on a local zone of protection basis. Thus, entities are allowed the latitude to designate their own definitions of control circuit components. Another example of where the entity has some discretion on determining what constitutes a single component is the voltage and current sensing devices, where the entity may choose either to designate a full three-phase set of such devices or a single device as a single component.

Countable Event – A component which has failed and requires repair or replacement, any condition discovered during the maintenance activities in Tables 1-1 through 1-5 and Table 3 which requires corrective action, or a Misoperation attributed to hardware failure or calibration failure. Misoperations due to product design errors, software errors, relay settings different from specified settings, Protection System component configuration errors, or Protection System application errors are not included in Countable Events.

A. Introduction

1. Title: **Protection System Maintenance**

2. Number: PRC-005-2

3. Purpose: To document and implement programs for the maintenance of all Protection Systems affecting the reliability of the Bulk Electric System (BES) so that these Protection Systems are kept in working order.

4. Applicability:

4.1. Functional Entities:

4.1.1 Transmission Owners

4.1.2 Generator Owners

4.1.3 Distribution Providers

4.2. Facilities:

4.2.1 Protection Systems that are installed for the purpose of detecting faults on BES Elements (lines, buses, transformers, etc.)

4.2.2 Protection Systems used for underfrequency load-shedding systems installed per ERO underfrequency load-shedding requirements.

4.2.3 Protection Systems used for undervoltage load-shedding systems installed to prevent system voltage collapse or voltage instability for BES reliability.

4.2.4 Protection Systems installed as a Special Protection System (SPS) for BES reliability.

4.2.5 Protection Systems for generator Facilities that are part of the BES, including:

4.2.5.1 Protection Systems that act to trip the generator either directly or via generator lockout or auxiliary tripping relays.

4.2.5.2 Protection Systems for generator step-up transformers for generators that are part of the BES.

4.2.5.3 Protection Systems for transformers connecting aggregated generation, where the aggregated generation is part of the BES (e.g., transformers connecting facilities such as wind-farms to the BES).

4.2.5.4 Protection Systems for generator-connected station service transformers for generators that are part of the BES.

5. Effective Date: See Implementation Plan

B. Requirements

R1. Each Transmission Owner, Generator Owner, and Distribution Provider shall establish a Protection System Maintenance Program (PSMP) for its Protection Systems identified in Section 4.2. *Violation Risk Factor: Medium] [Time Horizon: Long Term Planning]*

The PSMP shall:

1.1. Address all Protection System **component types.**

1.2. Identify which maintenance method (time-based,

Component Type *- Any one of the five specific elements of the Protection System definition.*

performance-based (per PRC-005 Attachment A), or a combination) is used to address each Protection System component type. All batteries associated with the station dc supply component type of a Protection System shall be included in a time-based program as described in Table 1-4 and Table 3.

1.3. Identify the associated maintenance intervals for time-based programs, to be no less frequent than the intervals established in Table 1-1 through 1-5~~ and~~ , Table 2, and Table 3.

1.4. Include all applicable monitoring attributes and related maintenance activities applied to each Protection System component type consistent with the maintenance intervals specified in Tables 1-1 through 1-5, ~~and~~ Table 2, and Table 3.

***~~Maintenance Correctable~~Unresolved Maintenance* Issue -** *~~Failure of a component to operate within design parameters such that the~~ A deficiency that cannot be corrected during the performance of the maintenance activity~~. Therefore this issue~~ and requires follow-up corrective action.*

R2. Each Transmission Owner, Generator Owner, and Distribution Provider that uses performance-based maintenance intervals in its PSMP shall follow the procedure established in PRC-005 Attachment A to establish and maintain its performance-based intervals. *[Violation Risk Factor: Medium] [Time Horizon: Operations Planning]*

R3. Each Transmission Owner, Generator Owner, and Distribution Provider shall implement and follow its PSMP and initiate resolution of any ~~identified **maintenance correctable**~~**unresolved maintenance issues**.
[Violation Risk Factor: High] [Time Horizon: Operations Planning]

C. Measures

M1. Each Transmission Owner, Generator Owner and Distribution Provider shall have a current documented Protection System Maintenance Program that addresses all component types of its Protection Systems, as required by Requirement R1. For each Protection System component type, the documentation shall include the type of maintenance program applied (time-based, performance-based, or a combination of these maintenance methods), maintenance activities, maintenance intervals, and, for component types that use monitoring to extend the intervals, the appropriate monitoring attributes as specified in Requirement R1, Parts 1.1 through 1.4.

M2. Each Transmission Owner, Generator Owner, and Distribution Provider that uses a performance-based maintenance program shall have evidence that its current performance-based maintenance program is in accordance with Requirement R2, which may include but is not limited to equipment lists, dated maintenance records, and dated analysis records and results.

M3. Each Transmission Owner, Generator Owner, and Distribution Provider shall have evidence that it has implemented the Protection System Maintenance Program and initiated resolution of ~~identified Maintenance Correctable Issues~~unresolved maintenance issues in accordance with Requirement R3, which may include but is not limited to dated maintenance records, dated maintenance summaries, dated check-off lists, dated inspection records, or dated work orders.

D. Compliance

1. Compliance Monitoring Process

1.1. Compliance Monitoring Responsibility

Regional Entity

1.2. Compliance Monitoring and Enforcement Processes:

Compliance Audits

Self-Certifications

Spot Checking

Compliance Violation Investigations

Self-Reporting

Complaints

1.3. Data Retention

The Transmission Owner, Generator Owner, and Distribution Provider shall each keep data or evidence to demonstrate compliance as identified below unless directed by its Compliance Enforcement Authority to retain specific evidence for a longer period of time as part of an investigation.

For Requirement R1, the Transmission Owner, Generator Owner, and Distribution Provider shall each keep its current dated Protection System Maintenance Program including the documentation that specifies the type of maintenance program applied for each Protection System component type.

For Requirement R2 and Requirement R3, the Transmission Owner, Generator Owner, and Distribution Provider shall each keep documentation of the two most recent performances of each distinct maintenance activity for the Protection System **components**, or all performances of each distinct maintenance activity for the Protection System component since the previous scheduled audit date, whichever is longer.

Component – *A component is any individual discrete piece of equipment included in a Protection System, including but not limited to a protective relay or current sensing device. The designation of what constitutes a control circuit component is very dependent upon how an entity performs and tracks the testing of the control circuitry. Some entities test their control circuits on a breaker basis whereas others test their circuitry on a local zone of protection basis. Thus, entities are allowed the latitude to designate their own definitions of control circuit components. Another example of where the entity has some discretion on determining what constitutes a single component is the voltage and current sensing devices, where the entity may choose either to designate a full three-phase set of such devices or a single device as a single component.*

The Compliance Enforcement Authority shall keep the last periodic audit report and all requested and submitted subsequent compliance records.

1.4. Additional Compliance Information

None.

2. Violation Severity Levels

Requirement Number	Lower VSL	Moderate VSL	High VSL	Severe VSL
R1	The responsible entity's PSMP failed to specify whether one component type is being addressed by time-based or performance-based maintenance, or a combination of both. (Part 1.2)	The responsible entity's PSMP failed to address one component type included in the definition of 'Protection System' (Part 1.1) OR The responsible entity's PSMP failed to specify whether two component types are being addressed by time-based or performance-based maintenance, or a combination of both. (Part 1.2)	The responsible entity's PSMP failed to address two component types included in the definition of 'Protection System' (Part 1.1) OR The responsible entity's PSMP failed to include station batteries in a time-based program (Part 1.2) OR The responsible entity failed to include all maintenance activities or intervals relevant for the identified monitoring attributes specified in Tables 1-1 through 1-5, ~~and~~ Table 2, and Table 3. (Part 1.3 and 1.4)	The responsible entity has not established a PSMP. OR The responsible entity's PSMP failed to address three or more component types included in the definition of 'Protection System' (Part 1.1) OR The responsible entity failed to specify whether three or more component types are being addressed by time-based or performance-based maintenance, or a combination of both. (Part 1.2).
R2	The responsible entity uses performance-based maintenance intervals in its PSMP but has: 1) Failed to reduce countable events to less than 4% within three years OR 2) Failed to annually document program activities, results, maintenance dates, or countable events for 5% or less of components in any individual segment	NA	The responsible entity uses performance-based maintenance intervals in its PSMP but has failed to reduce countable events to less than 4% within four years.	The responsible entity uses performance-based maintenance intervals in its PSMP but has: 1) Failed to establish the entire technical justification described within R2 for the initial use of the performance-based PSMP OR 2) Failed to reduce countable events to less than 4% within five years OR 3) Failed to annually document program activities, results, maintenance dates, or countable

Requirement Number	Lower VSL	Moderate VSL	High VSL	Severe VSL
				events for over 5% of components in any individual segment OR 4) Maintained a segment with less than 60 components OR 5) Failed to: • Annually update the list of components, OR • Perform maintenance on the greater of 5% of the segment population or 3 components, OR • Annually analyze the program activities and results for each segment.
R3	The responsible entity has failed to implement and follow scheduled program on 5% or less of total Protection System components. OR The responsible entity has failed to initiate resolution on 5% or less of ~~identified maintenance correctable~~unresolved maintenance issues.	The responsible entity has failed to implement and follow scheduled program on greater than 5%, but no more than 10% of total Protection System components OR The responsible entity has failed to initiate resolution on greater than 5%, but less than or equal to 10% of ~~identified~~ unresolved maintenance~~maintenance correctable~~ issues.	The responsible entity has failed to implement and follow scheduled program on greater than 10%, but no more than 15% of total Protection System components OR The responsible entity has failed to initiate resolution on greater than 10%, but less than or equal to 15% of ~~identified~~unresolved maintenance issues.	The responsible entity has failed to implement and follow scheduled program on greater than 15% of total Protection System components OR The responsible entity has failed to initiate resolution on greater than 15% of ~~identified~~ unresolved maintenance~~maintenance correctable~~ issues.

E. Regional Variances

None

F. Supplemental Reference Document

The following documents present a detailed discussion about determination of maintenance intervals and other useful information regarding establishment of a maintenance program..

1. PRC-005-2 Protection System Maintenance Supplementary Reference and FAQ — July~~February~~ 2011.

Version History

Version	Date	Action	Change Tracking
2	TBD	Complete revision, absorbing maintenance requirements from PRC-005-1, PRC-005-1a, PRC-008-0, PRC-011-0, PRC-017	Complete revision

Table 1-1 Component Type - Protective Relay Excluding distributed UFLS and UVLS (see Table 3)		
Component Attributes	**Maximum Maintenance Interval**[1]	**Maintenance Activities**
Any unmonitored protective relay not having all the monitoring attributes of a category below.	6 calendar years	Verify that settings are as specified For non-microprocessor relays: • Test and, if necessary calibrate For microprocessor relays: • Verify operation of the relay inputs and outputs that are essential to proper functioning of the Protection System. • Verify acceptable measurement of power system input values.
Monitored microprocessor protective relay with the following: • Internal self diagnosis and alarming (see Table 2). • Voltage and/or current waveform sampling three or more times per power cycle, and conversion of samples to numeric values for measurement calculations by microprocessor electronics. • Alarming for power supply failure (see Table 2).	12 calendar years	Verify: • Settings are as specified. • Operation of the relay inputs and outputs that are essential to proper functioning of the Protection System. • Acceptable measurement of power system input values.

[1] For the tables in this standard, a calendar year starts on the first day of a new year (January 1) after a maintenance activity has been completed. For the tables in this standard, a calendar month starts on the first day of the first month after a maintenance activity has been completed.

Monitored microprocessor protective relay with preceding row attributes and the following: • Ac measurements are continuously verified by comparison to an independent ac measurement source, with alarming for excessive error. (See Table 2) • Some or all binary or status inputs and control outputs are monitored by a process that continuously demonstrates ability to perform as designed, with alarming for failure. (See Table 2) • Alarming for change of settings. (See Table 2)	12 calendar years	Verify only the unmonitored relay inputs and outputs that are essential to proper functioning of the Protection System.

Table 1-2 Component Type - Communications Systems Excluding distributed UFLS and UVLS (see Table 3)		
Component Attributes	**Maximum Maintenance Interval**	**Maintenance Activities**
Any unmonitored communications system necessary for correct operation of protective functions, and not having all the monitoring attributes of a category below.	~~3~~ 4 calendar months	Verify that the communications system is functional.
	6 calendar years	Verify that the channel meets performance criteria pertinent to the communications technology applied (~~e.g~~e.g. ~~-~~signal level, reflected power, or data error rate). Verify essential signals to and from other Protection System components.

Any communications system with continuous monitoring or periodic automated testing for the presence of the channel function, and alarming for loss of function. (See Table 2)	12 calendar years	Verify that the channel meets performance criteria pertinent to the communications technology applied (~~e.g~~e.g. signal level, reflected power, or data error rate). Verify essential signals to and from other Protection System components.
Any communications system with continuous monitoring or periodic automated testing for the performance of the channel using criteria pertinent to the communications technology applied (e.g. signal level, reflected power, or data error rate, and alarming for excessive performance degradation). (See Table 2)	No periodic maintenance specified	None.

Table 1-3 Component Type - Voltage and Current Sensing Devices Providing Inputs to Protective Relays Excluding distributed UFLS and UVLS (see Table 3)		
Component Attributes	**Maximum Maintenance Interval**	**Maintenance Activities**
Any voltage and current sensing devices not having monitoring attributes of the category below.	12 calendar years	Verify that current and voltage signal values are provided to the protective relays.
Voltage and Current Sensing devices connected to microprocessor relays with AC measurements are continuously verified by comparison of sensing input value, as measured by the microprocessor relay, to an independent ac measurement source, with alarming for unacceptable error or failure (see Table 2).	No periodic maintenance specified	None.

Table 1-4(a) Component Type – Protection System Station dc Supply Using Vented Lead-Acid (VLA) Batteries Excluding distributed UFLS and UVLS (see Table 3)		
Component Attributes	**Maximum Maintenance Interval**	**Maintenance Activities**
Protection System Station dc supply using **Vented Lead-Acid (VLA) batteries** not having monitoring attributes of Table 1-4(f). Protection System Station dc supply for distribution breakersnon-BES interrupting devices for UFLS or UVLSSPS or non-distributed UVLS systems are excluded (see Table 1-4(e)).	3 4 Calendar Months	Verify: • Station dc supply voltage Inspect: • Electrolyte level • For unintentional grounds
	18 Calendar Months	Verify: • Float voltage of battery charger • Battery continuity • Battery terminal connection resistance • Battery intercell or unit-to-unit connection resistance Inspect: • Cell condition of all individual battery cells where cells are visible – or measure battery cell/unit internal ohmic values where the cells are not visible • Physical condition of battery rack
	18 Calendar Months -or- 6 Calendar Years	Verify that the station battery can perform as designed by evaluating the measured cell/unit internal ohmic values to station battery baseline. -or- Verify that the station battery can perform as designed by conducting a performance, service, or modified performance capacity test of the entire battery bank.

Table 1-4(b) Component Type – Protection System Station dc Supply Using Valve-Regulated Lead-Acid (VRLA) Batteries Excluding distributed UFLS and UVLS (see Table 3)		
Component Attributes	**Maximum Maintenance Interval**	**Maintenance Activities**
Protection System Station dc supply **with Valve Regulated Lead-Acid (VRLA) batteries** not having monitoring attributes of Table 1-4(f). Station dc supply for non-BES interrupting devices ~~distribution breakers~~ for ~~UFLS or UVLS~~SPS or non-distributed UFLS and UVLS systems are excluded (see Table 1-4(e)).	~~3~~ 4 Calendar Months	Verify: • Station dc supply voltage Inspect: • For unintentional grounds
	6 Calendar Months	Inspect: • Condition of all individual units by measuring battery cell/unit internal ohmic values.
	18 Calendar Months	Verify: • Float voltage of battery charger • Battery continuity • Battery terminal connection resistance • Battery intercell or unit-to-unit connection resistance Inspect: • Physical condition of battery rack
	6 Calendar Months -or- 3 Calendar Years	Verify that the station battery can perform as designed by evaluating the measured cell/unit internal ohmic values to station battery baseline. -or- Verify that the station battery can perform as designed by conducting a performance, service, or modified performance capacity test of the entire battery bank

Table 1-4(c) Component Type – Protection System Station dc Supply Using Nickel-Cadmium (NiCad) Batteries Excluding UFLS and non-distributed UVLS (see Table 3)		
Component Attributes	**Maximum Maintenance Interval**	**Maintenance Activities**
Protection System Station dc supply **Nickel-Cadmium (NiCad) batteries** not having monitoring attributes of Table 1-4(f). Station dc supply for non-BES interrupting devices distribution breakers for UFLS or UVLSSPS or non-distributed UFLS and UVLS systems are excluded (see Table 1-4(e)).	3 4 Calendar Months	Verify: • Station dc supply voltage Inspect: • Electrolyte level • For unintentional grounds
	18 Calendar Months	Verify: • Float voltage of battery charger • Battery continuity • Battery terminal connection resistance • Battery intercell or unit-to-unit connection resistance Inspect: • Cell condition of all individual battery cells. • Physical condition of battery rack
	6 Calendar Years	Verify that the station battery can perform as designed by conducting a performance service, or modified performance capacity test of the entire battery bank.

Table 1-4(d) Component Type – Protection System Station dc Supply Using Non Battery Based Energy Storage Excluding UFLS and distributed UVLS (see Table 3)		
Component Attributes	**Maximum Maintenance Interval**	**Maintenance Activities**
Any Protection System station dc supply not using a battery and not having monitoring attributes of Table 1-4(f). Protection System Station dc supply for non-BES interrupting devices distribution breakers for UFLS, UVLS and SPS or non-distributed UFLS and UVLS systems are excluded (see Table 1-4(e)).	3 4 Calendar Months	Verify: • Station dc supply voltage Inspect: • For unintentional grounds
	18 Calendar Months	Inspect: Condition of non-battery based dc supply
	6 Calendar Years	Verify that the dc supply can perform as designed when ac power is not present.

Table 1-4(e) Component Type – Protection System Station dc Supply for non-BES Interrupting Device for SPS and non-distributed UVLS and UFLS systems		
Component Attributes	**Maximum Maintenance Interval**	**Maintenance Activities**
Any Protection System dc supply for tripping only non-BES interrupting devices as part of a ~~UFLS, UVLS or~~ SPS or non-distributed UVLS and UFLS system and not having monitoring attributes of Table 1-4(f).	When control circuits are verified (See Table 1-5)	Verify~~:~~ ~~•~~ Station dc supply voltage

Table 1-4(f) Exclusions for Protection System Station dc Supply Monitoring Devices and Systems		
Component Attributes	**Maximum Maintenance Interval**	**Maintenance Activities**
Any station dc supply with high and low voltage monitoring and alarming of the battery charger voltage to detect charger overvoltage and charger failure. (See Table 2)	No periodic maintenance specified	No periodic verification of station dc supply voltage is required.
Any battery based station dc supply with electrolyte level monitoring and alarming in every cell (See Table 2)		No periodic inspection of the electrolyte level for each cell is required.
Any station dc supply with unintentional dc ground monitoring and alarming (See Table 2)		No periodic inspection of unintentional dc grounds is required.
Any station dc supply with charger float voltage monitoring and alarming to ensure correct float voltage is being applied on the station dc supply (See Table 2)		No periodic verification of float voltage of battery charger is required
Any battery based station dc supply with monitoring and alarming of battery string continuity (See Table 2)		No periodic verification of the battery continuity is required.
Any battery based station dc supply with monitoring and alarming of the intercell and/or terminal connection detail resistance of the entire battery (See Table 2)		No periodic verification of the intercell and terminal connection resistance is required.
Any lead acid battery based station dc supply with internal ohmic value monitoring, and evaluating present values relative to baseline internal ohmic values for every cell/unit (See Table 2)		.No periodic measurement and evaluation relative to baseline of battery cell/unit internal ohmic values is required to verify the station battery can perform as designed .
Any Valve Regulated Lead-Acid (VRLA) station battery with monitoring and alarming of each cell/unit internal Ohmic value. (See Table 2)		No periodic inspection of the condition of all individual units by measuring battery cell/unit internal ohmic values of a station VRLA battery is required.

Table 1-5 Component Type - Control Circuitry Associated With Protective Functions Excluding distributed UFLS and UVLS (see Table 3) **Note:** Table requirements apply to all Control Circuitry components of Protection Systems, ~~UVLS and UFLS Systems,~~ and SPSs except as noted.		
Component Attributes	**Maximum Maintenance Interval**	**Maintenance Activities**
Trip coils or actuators of circuit breakers, interrupting devices, or mitigating devices ~~(excluding UFLS or UVLS systems).~~	6 calendar years	Verify that each trip coil is able to operate the circuit breaker, interrupting device, or mitigating device.
~~Trip coils of circuit breakers and interrupting devices in UFLS or UVLS systems.~~Unmonitored control circuitry associated with SPS	~~No periodic maintenance specified~~12 calendar years	~~None.~~Verify all paths of the control circuits essential for proper operation of the SPS.
Electromechanical lockout and/or tripping auxiliary devices which are directly in a trip path from the protective relay to the interrupting device trip ~~coil .~~coil.	6 calendar years	Verify electrical operation of electromechanical trip and auxiliary devices.
Unmonitored control circuitry associated with protective functions.	12 calendar years	Verify all paths of the ~~control and~~ trip circuits through the trip coil(s) of the circuit breakers or other interrupting devices~~circuits~~.
Control circuitry whose continuity and energization or ability to operate are monitored and alarmed (See Table 2).	No periodic maintenance specified	None.

Table 2 – Alarming Paths and Monitoring In Tables 1-1 through 1-5, alarm attributes used to justify extended maximum maintenance intervals and/or reduced maintenance activities are subject to the following maintenance requirements		
Component Attributes	**Maximum Maintenance Interval**	**Maintenance Activities**
Any alarm path through which alarms in Tables 1-1 through 1-5 are conveyed from the alarm origin to the location where corrective action can be initiated, and not having all the attributes of the "Alarm Path with monitoring" category below. Alarms are reported within 24 hours of DETECTION to a location where corrective action can be initiated.	12 Calendar Years	Verify that the alarm path conveys alarm signals to a location where corrective action can be initiated.
Alarm Path with monitoring: The location where corrective action is taken receives an alarm within 24 hours for failure of any portion of the alarming path from the alarm origin to the location where corrective action can be initiated.	No periodic maintenance specified	~~No periodic maintenance specified~~None.

Table 3 Maintenance Activities and Intervals for distributed UFLS and UVLS Systems		
Component Attributes	**Maximum Maintenance Interval**	**Maintenance Activities**
Any unmonitored protective relay not having all the monitoring attributes of a category below.	6 calendar years	Verify that settings are as specified For non-microprocessor relays: • Test and, if necessary calibrate For microprocessor relays: • Verify operation of the relay inputs and outputs that are essential to proper functioning of the Protection System. • Verify acceptable measurement of power system input values.
Monitored microprocessor protective relay with the following: • Internal self diagnosis and alarming (See Table 2). • Voltage and/or current waveform sampling three or more times per power cycle, and conversion of samples to numeric values for measurement calculations by microprocessor electronics. Alarming for power supply failure (See Table 2).	12 calendar years	Verify: • Settings are as specified. • Operation of the relay inputs and outputs that are essential to proper functioning of the Protection System. • Acceptable measurement of power system input values.

Monitored microprocessor protective relay with preceding row attributes and the following: • Ac measurements are continuously verified by comparison to an independent ac measurement source, with alarming for excessive error. (See Table 2) • Some or all binary or status inputs and control outputs are monitored by a process that continuously demonstrates ability to perform as designed, with alarming for failure. (See Table 2) Alarming for change of settings. (See Table 2)	12 calendar years	Verify only the unmonitored relay inputs and outputs that are essential to proper functioning of the Protection System.
Voltage and/or current sensing devices associated with UFLS or UVLS systems.	12 calendar years	Verify that current and/or voltage signal values are provided to the protective relays.
Protection System dc supply for tripping only non-BES interrupting devices as part of a UFLS or UVLS system.	12 calendar years	Verify Protection System dc supply voltage
Control circuitry between the UFLS or UVLS relays and electromechanical lockout and/or tripping auxiliary devices.	12 calendar years	Verify the path from the relay to the lockout and/or tripping auxiliary relay (including essential supervisory logic).
Electromechanical lockout and/or tripping auxiliary devices associated only with UFLS or UVLS systems.	12 calendar years	Verify electrical operation of electromechanical lockout and/or tripping auxiliary devices.
Control circuitry between the electromechanical lockout and/or tripping auxiliary devices and the non-BES interrupting devices in UFLS or UVLS systems, or between UFLS or UVLS relays (with no interposing electromechanical lockout or auxiliary device) and the non-BES interrupting devices.	No periodic maintenance specified	None.
Trip coils of non-BES interrupting devices in UFLS or UVLS systems.	No periodic maintenance specified	None.

PRC-005 — Attachment A

Criteria for a Performance-Based Protection System Maintenance Program

Purpose: To establish a technical basis for initial and continued use of a performance-based Protection System Maintenance Program (PSMP).

To establish the technical justification for the initial use of a performance-based PSMP:

1. Develop a list with a description of components included in each designated segment of the Protection System component population, with a minimum **segment** population of 60 components.
2. Maintain the components in each segment according to the time-based maximum allowable intervals established in Tables 1-1 through 1-5 and Table 3 until results of maintenance activities for the segment are available for a minimum of 30 individual components of the segment.

> **Segment** – *Protection Systems or components of a consistent design standard, or a particular model or type from a single manufacturer that typically share other common elements. Consistent performance is expected across the entire population of a segment. A segment must contain at least sixty (60) individual components.*

3. Document the maintenance program activities and results for each segment, including maintenance dates and countable events for each included component.
4. Analyze the maintenance program activities and results for each segment to determine the overall performance of the segment and develop maintenance intervals.
5. Determine the maximum allowable maintenance interval for each segment such that the segment experiences **countable events** on no more than 4% of the components within the segment, for the greater of either the last 30 components maintained or all components maintained in the previous year.

> **Countable Event** – *A component which has failed and requires repair or replacement, any condition discovered during the maintenance activities in Tables 1-1 through 1-5 and Table 3 which requires corrective action, or a Misoperation attributed to hardware failure or calibration failure. Misoperations due to product design errors, software errors, relay settings different from specified settings, Protection System component configuration errors, or Protection System application errors are not included in Countable Events.*

To maintain the technical justification for the ongoing use of a performance-based PSMP:

1. At least annually, update the list of Protection System components and segments and/or description if any changes occur within the segment.
2. Perform maintenance on the greater of 5% of the components (addressed in the performance based PSMP) in each segment or 3 individual components within the segment in each year.
3. For the prior year, analyze the maintenance program activities and results for each segment to determine the overall performance of the segment.

4. Using the prior year's data, determine the maximum allowable maintenance interval for each segment such that the segment experiences countable events on no more than 4% of the components within the segment, for the greater of either the last 30 components maintained or all components maintained in the previous year.
5. If the components in a Protection System segment maintained through a performance-based PSMP experience 4% or more countable events, develop, document, and implement an action plan to reduce the countable events to less than 4% of the segment population within 3 years.

Implementation Plan for PRC-005-02

Standards Involved

- Approval:
  - PRC-005-2 – Protection System Maintenance and Testing

- Retirements (phased to coincide with each entity's implementation of PRC-005-2 as specified in the Implementation Plan for Requirements R1 through R3 later in this document):

  - PRC-005-1 – Transmission and Generation Protection System Maintenance and Testing
  - PRC-005-1a – Transmission and Generation Protection System Maintenance and Testing
  - PRC-008-0 – Implementation and Documentation of Underfrequency Load Shedding Equipment Maintenance Program
  - PRC-011-0 – Undervoltage Load Shedding System Maintenance and Testing
  - PRC-017-0 – Special Protection System Maintenance and Testing

Prerequisite Approvals:

- Revised definition of "Protection System"

Background:

The Implementation Plan reflects consideration of the following:

1. The requirements set forth in the proposed standard establish maximum allowable maintenance intervals for the first time. The established maximum allowable intervals may be shorter than those currently in use by some entities.
2. For entities using longer intervals than the maximum allowable intervals established in the proposed standard, it is unrealistic for those entities to be immediately in compliance with the new intervals. Further, entities should be allowed to become compliant in such a way as to facilitate a continuing maintenance program.
3. Entities that have previously been performing maintenance within the newly specified intervals may not have all the documentation needed to demonstrate compliance with all of the maintenance activities specified.
4. The Implementation Schedule set forth in this document requires that entities develop their revised Protection System Maintenance Program within 12 months following applicable regulatory approvals, or in those jurisdictions where no regulatory approval is required, on the first day of the first calendar quarter twelve months following Board of Trustees adoption.
5. The Implementation Schedule set forth in this document further requires implementation of the revised Protection System Maintenance Program in roughly equally-distributed steps over the maintenance intervals prescribed for each respective maintenance activity in order that entities may implement this standard in a systematic method that facilitates an effective ongoing Protection System Maintenance Program.

General Considerations:

Each Transmission Owner, Generator Owner, and Distribution Provider shall follow the protection system maintenance and testing program it used to perform maintenance and testing to comply with PRC-005-1, PRC-005-1a, PRC-008-0, PRC-011-0, and PRC-017-0 (for the Protection System components identified in PRC-005-2 Tables 1-1 through 1-5, Table 2, and Table 3) until that Transmission Owner, Generator Owner or Distribution Provider meets initial compliance for maintenance of the same Protection System component, in accordance with the phasing specified below.

For audits that are conducted during the time period when entities are modifying their existing protection system maintenance and testing programs to become compliant with the maintenance activities and intervals specified in PRC-005-2, each responsible entity must be prepared to identify:

- All of its applicable protection system components.
- For each component, whether maintenance of that component is being addressed according to PRC-005-2 or under PRC-005-1, PRC-005-1a, PRC-008-0, PRC-011-0, or PRC-017-0.
- Evidence that each component has been maintained under the relevant requirements.

Retirement of Existing Standards:

The existing Standards PRC-005-1, PRC-005-1a, PRC-008-0, PRC-011-0, and PRC-017-0 shall be retired at midnight of the day immediately prior to the first day of the first calendar quarter following the latter of 156 months following applicable regulatory approval in all jurisdictions or 168 months following Board of Trustees adoption of PRC-005-2.

Implementation Plan for Definition:

Protection System Maintenance Program – Entities shall use this definition when implementing any portions of R1, R2 and R3 which use this defined term.

Implementation Plan for Requirement R1:

- Entities shall be 100% compliant on the first day of the first calendar quarter twelve (12) months following applicable regulatory approvals, or in those jurisdictions where no regulatory approval is required, on the first day of the first calendar quarter twenty-one (21) months following Board of Trustees adoption.

Implementation Plan for Requirements R2 and R3:

1. For Protection System components with maximum allowable intervals of less than 1 year, as established in Tables 1-1 through 1-5:
    a. The entity shall be 100% compliant on the first day of the first calendar quarter 15 months following applicable regulatory approval, or in those jurisdictions where no regulatory approval is required, on the first day of the first calendar quarter 24 months following Board of Trustees adoption.

2. For Protection System components with maximum allowable intervals 1 year or more, but 2 years or less, as established in Tables 1-1 through 1-5:

a. The entity shall be 100% compliant on the first day of the first calendar quarter 36 months following applicable regulatory approval, or in those jurisdictions where no regulatory approval is required, on the first day of the first calendar quarter 48 months following Board of Trustees adoption.

3. For Protection System components with maximum allowable intervals of 3 years, as established in Tables 1-1 through 1-5:
   a. The entity shall be at least 30% compliant on the first day of the first calendar quarter 24 months following applicable regulatory approval (or, for generating plants with scheduled outage intervals exceeding two years, at the conclusion of the first succeeding maintenance outage), or in those jurisdictions where no regulatory approval is required, on the first day of the first calendar quarter 36 months following Board of Trustees adoption.
   b. The entity shall be at least 60% compliant on the first day of the first calendar quarter 36 months following applicable regulatory approval, or in those jurisdictions where no regulatory approval is required, on the first day of the first calendar quarter 48 months following Board of Trustees adoption.
   c. The entity shall be 100% compliant on the first day of the first calendar quarter 48 months following applicable regulatory approval, or in those jurisdictions where no regulatory approval is required, on the first day of the first calendar quarter 60 months following Board of Trustees adoption.

4. For Protection System components with maximum allowable intervals of 6 years, as established in Tables 1-1 through 1-5 and Table 3:
   a. The entity shall be at least 30% compliant on the first day of the first calendar quarter 36 months following applicable regulatory approval (or, for generating plants with scheduled outage intervals exceeding three years, at the conclusion of the first succeeding maintenance outage), or in those jurisdictions where no regulatory approval is required, on the first day of the first calendar quarter 48 months following Board of Trustees adoption.
   b. The entity shall be at least 60% compliant on the first day of the first calendar quarter 60 months following applicable regulatory approval, or in those jurisdictions where no regulatory approval is required, on the first day of the first calendar quarter 72 months following Board of Trustees adoption.
   c. The entity shall be 100% compliant on the first day of the first calendar quarter 84 months following applicable regulatory approval, or in those jurisdictions where no regulatory approval is required, on the first day of the first calendar quarter 96 months following Board of Trustees adoption.

5. For Protection System components with maximum allowable intervals of 12 years, as established in Tables 1-1 through 1-5 Table 2, and Table 3:
   a. The entity shall be at least 30% compliant on the first day of the first calendar quarter 60 months following applicable regulatory approval, or in those jurisdictions where no regulatory approval is required, on the first day of the first calendar quarter 72 months following Board of Trustees adoption.
   b. The entity shall be at least 60% compliant on the first day of the first calendar quarter following 108 months following applicable regulatory approval, or in those jurisdictions

where no regulatory approval is required, on the first day of the first calendar quarter 120 months following Board of Trustees adoption.

c. The entity shall be 100% compliant on the first day of the first calendar quarter 156 months following applicable regulatory approval, or in those jurisdictions where no regulatory approval is required, on the first day of the first calendar quarter 168 months following Board of Trustees adoption.

Applicability:

This standard applies to the following functional entities:

- Transmission Owners
- Generator Owners
- Distribution Providers

Implementation Plan for PRC-005-02

Standards Involved:

- Approval:
  - PRC-005-2 – Protection System Maintenance and Testing

- Retirements (phased to coincide with each entity's implementation of PRC-005-2 as specified in the Implementation Plan for Requirements R1 through R3 later in this document):

  - PRC-005-1 —Transmission and Generation Protection System Maintenance and Testing

  - PRC-005-1a –Transmission and Generation Protection System Maintenance and Testing
  - PRC-008-0 – Implementation and Documentation of Underfrequency Load Shedding Equipment Maintenance Program
  - PRC-011-0 – Undervoltage Load Shedding System Maintenance and Testing
  - PRC-017-0 —Special Protection System Maintenance and Testing

Prerequisite Approvals:

- Revised definition of "Protection System"

Background:

The Implementation Plan reflects consideration of the following:

1. The requirements set forth in the proposed standard establish maximum allowable maintenance intervals for the first time. The established maximum allowable intervals may be shorter than those currently in use by some entities.
2. For entities using longer intervals than the maximum allowable intervals established in the proposed standard, it is unrealistic for those entities to be immediately in compliance with the new intervals. Further, entities should be allowed to become compliant in such a way as to facilitate a continuing maintenance program.
3. Entities that have previously been performing maintenance within the newly specified intervals may not have all the documentation needed to demonstrate compliance with all of the maintenance activities specified.
4. The Implementation Schedule set forth in this document requires that entities develop their revised Protection System Maintenance Program within 12 months following applicable regulatory approvals, or in those jurisdictions where no regulatory approval is required, on the first day of the first calendar quarter twelve months following Board of Trustees adoption.
5. The Implementation Schedule set forth in this document further requires implementation of the revised Protection System Maintenance Program in roughly equally-distributed steps over the maintenance intervals prescribed for each respective maintenance activity in order that entities may implement this standard in a systematic method that facilitates an effective ongoing Protection System Maintenance Program.

General Considerations:

Each Transmission Owner, Generator Owner, and Distribution Provider shall follow the protection system maintenance and testing program it used to perform maintenance and testing to comply with PRC-005-1, PRC-005-1a, PRC-008-0, PRC-011-0, and PRC-017-0 (for the Protection System components identified in PRC-005-2 Tables 1-1 through 1-5, Table 2, and Table 3) until that Transmission Owner, Generator Owner or Distribution Provider meets initial compliance for maintenance of the same Protection System component, in accordance with the phasing specified below.

For audits that are conducted during the time period when entities are modifying their existing protection system maintenance and testing programs to become compliant with the maintenance activities and intervals specified in PRC-005-2, each responsible entity must be prepared to identify:

- All of its applicable protection system components.
- For each component, whether maintenance of that component is being addressed according to PRC-005-2 or under PRC-005-1, PRC-005-1a, PRC-008-0, PRC-011-0, or PRC-017-0.
- Evidence that each component has been maintained under the relevant requirements.

Retirement of Existing Standards:

The existing Standards PRC-005-1, PRC-005-1a, PRC-008-0, PRC-011-0, and PRC-017-0 shall be retired at midnight of the day immediately prior to the first day of the first calendar quarter following the latter of 156 months following applicable regulatory approval in all jurisdictions or 168 months following Board of Trustees adoption ~~.upon regulatory approval~~ of PRC-005-2.

Implementation Plan for Definition:

Protection System Maintenance Program – Entities shall use this definition when implementing any portions of R1, R2 and R3 which use this defined term.

Implementation Plan for Requirement R1:

- Entities shall be 100% compliant on the first day of the first calendar quarter twelve (12) months following applicable regulatory approvals, or in those jurisdictions where no regulatory approval is required, on the first day of the first calendar quarter twenty-one (21) months following Board of Trustees adoption.

Implementation Plan for Requirements R2 and R3:

1. For Protection System components with maximum allowable intervals of less than 1 year, as established in Tables 1-1 through 1-5:
    a. The entity shall be 100% compliant on the first day of the first calendar quarter 15 months following applicable regulatory approval, or in those jurisdictions where no regulatory approval is required, on the first day of the first calendar quarter 24 months following Board of Trustees adoption.

2. For Protection System components with maximum allowable intervals 1 year or more, but 2 years or less, as established in Tables 1-1 through 1-5:

a. The entity shall be 100% compliant on the first day of the first calendar quarter 36 months following applicable regulatory approval, or in those jurisdictions where no regulatory approval is required, on the first day of the first calendar quarter 48 months following Board of Trustees adoption.

3. For Protection System components with maximum allowable intervals of 3 years, as established in Tables 1-1 through 1-5:
   a. The entity shall be at least 30% compliant on the first day of the first calendar quarter 24 months following applicable regulatory approval (or, for generating plants with scheduled outage intervals exceeding two years, at the conclusion of the first succeeding maintenance outage), or in those jurisdictions where no regulatory approval is required, on the first day of the first calendar quarter 36 months following Board of Trustees adoption.
   b. The entity shall be at least 60% compliant on the first day of the first calendar quarter 36 months following applicable regulatory approval, or in those jurisdictions where no regulatory approval is required, on the first day of the first calendar quarter 48 months following Board of Trustees adoption.
   c. The entity shall be 100% compliant on the first day of the first calendar quarter 48 months following applicable regulatory approval, or in those jurisdictions where no regulatory approval is required, on the first day of the first calendar quarter 60 months following Board of Trustees adoption.

4. For Protection System components with maximum allowable intervals of 6 years, as established in Tables 1-1 through 1-5 and Table 3:
   a. The entity shall be at least 30% compliant on the first day of the first calendar quarter 36 months following applicable regulatory approval (or, for generating plants with scheduled outage intervals exceeding three years, at the conclusion of the first succeeding maintenance outage), or in those jurisdictions where no regulatory approval is required, on the first day of the first calendar quarter 48 months following Board of Trustees adoption.
   b. The entity shall be at least 60% compliant on the first day of the first calendar quarter 60 months following applicable regulatory approval, or in those jurisdictions where no regulatory approval is required, on the first day of the first calendar quarter 72 months following Board of Trustees adoption.
   c. The entity shall be 100% compliant on the first day of the first calendar quarter 84 months following applicable regulatory approval, or in those jurisdictions where no regulatory approval is required, on the first day of the first calendar quarter 96 months following Board of Trustees adoption.

5. For Protection System components with maximum allowable intervals of 12 years, as established in Tables 1-1 through 1-5, ~~and~~ Table 2, and Table 3:
   a. The entity shall be at least 30% compliant on the first day of the first calendar quarter 60 months following applicable regulatory approval, or in those jurisdictions where no regulatory approval is required, on the first day of the first calendar quarter 72 months following Board of Trustees adoption.
   b. The entity shall be at least 60% compliant on the first day of the first calendar quarter following 108 months following applicable regulatory approval, or in those jurisdictions

where no regulatory approval is required, on the first day of the first calendar quarter 120 months following Board of Trustees adoption.

c. The entity shall be 100% compliant on the first day of the first calendar quarter 156 months following applicable regulatory approval, or in those jurisdictions where no regulatory approval is required, on the first day of the first calendar quarter 168 months following Board of Trustees adoption.

Applicability:
This standard applies to the following functional entities:

- Transmission Owners
- Generator Owners
- Distribution Providers

Standard Authorization Request Form

Title of Proposed Standard: Transmission and Generation Protection System Maintenance and Testing	
Request Date: August 4, 2011	

SAR Requestor Information	**SAR Type** (*Check a box for each one that applies.*)	
Name: System Protection and Controls Task Force (Attachment A)	☐	New Standard
Primary Contact Charles Rogers	X	Revision to existing Standards: PRC-005-1 — Transmission and Generation Protection System Maintenance and Testing PRC-008-0 — Underfrequency Load Shedding Equipment Maintenance Programs PRC-011-0 — UVLS System Maintenance and Testing PRC-017-0 — Special Protection System Maintenance and Testing
Telephone (517) 788-0027 Fax (517) 788-0917	X	Withdrawal of existing Standard
E-mail cwrogers@cmsenergy.com	☐	Urgent Action

Purpose (Describe the purpose of the standard — what the standard will achieve in support of reliability.)

The purpose of standard PRC-005 should remain "To ensure all transmission and generation Protection Systems affecting the reliability of the Bulk Electric System (BES) are maintained and tested."

Industry Need (Provide a detailed statement justifying the need for the proposed standard, along with any supporting documentation.)

In Order 693, the Federal Energy Regulatory Commission directed that changes be made to these standards.

These standards should be consolidated into a single standard to reduce the costs of compliance and a number of technical short comings in these standards should be corrected to provide reliable performance when responding to abnormal system conditions.

Brief Description (Describe the proposed standard in sufficient detail to clearly define the scope in a manner that can be easily understood by others.)

Revise PRC-005-1 — Transmission and Generation Protection System Maintenance and Testing, to consolidate PRC-005-1, PRC-008-0 — Underfrequency Load Shedding Equipment Maintenance Programs; PRC-011-0 — UVLS System Maintenance and Testing; and PRC-017-0 — Special Protection System Maintenance and Testing into a single maintenance and testing standard. Standards PRC-008-0, PRC-011-0, and PRC-017-0 would then be withdrawn.

The revised PRC-005 standard should address the issues raised in the FERC Order 693, the issues raised by stakeholders during the development of Version 0 and Phase III & IV standards (Attachment D), and the issues addressed in the SPCTF report "Assessment of PRC-005-1 – Transmission and Generation Protection System Maintenance and Testing; with implications for PRC-008-0, PRC-011-0, and PRC-017-0" (Attachment B) The revised standard should also address the comments submitted by stakeholders during the development of Version 0, and Phase III & IV and should reflect improvements identified in the Reliability Standards Review Guidelines. (Attachment C)

Detailed Description:

The PRC-005, 008, 011, and 017 reliability standards are intended to assure that Transmission & Generation Protection Systems are maintained and tested so as to provide reliable performance when responding to abnormal system conditions. It is the responsibility of the Transmission Owner, Generation Owner, and Distribution Provider to ensure the Transmission & Generation Protection Systems are maintained and tested in such a manner that the protective systems operate to fulfill their function.

Applicable to all four standards — The listed requirements do not provide clear and sufficient guidance concerning the maintenance and testing of the Protection Systems to achieve the commonly stated purpose which is "To ensure all transmission and generation Protection Systems affecting the reliability of the Bulk Electric System (BES) are maintained and tested."

- Applicable to PRC-017 — Part of the stated purpose in PRC-017 is: "To ensure that maintenance and testing programs are developed and misoperations are analyzed and corrected." The phrase "and misoperations are analyzed and corrected" is not clearly appropriate in a maintenance and testing standard. That is the purpose is more appropriate in PRC-003 and PRC-004, which relate to the analysis and mitigation of protection system misoperations. Analysis of correct operations or misoperations may be an integral part of condition-based maintenance processes, but need not be mandated in a maintenance standard.
- Applicable to all four standards — The standards should clearly state which power system elements are being addressed.
- Applicable to all four standards — The requirements should reflect the inherent differences between various protection system technologies.
- Applicable to all four standards — The terms "maintenance programs" and "testing programs" should be clearly defined in the glossary. The terms "maintenance" and "testing" are not interchangeable, and the requirements must be clear in their application. Additional terms may also have to be added to the glossary for clarity.
- Applicable to all four standards — The requirements of the existing standards, as stated, support time-based maintenance and testing, and should be expanded to include condition-based and performance-based maintenance and testing. The requirements for maintenance and testing procedures need to have more specificity to insure that the stated intent of the standards is met to support review by the compliance monitor.

The revised standard should also include the general improvements identified in the attached Reliability Standard Review Guidelines (Attachment C) and should address the comments submitted by stakeholders (Attachment D).

Reliability Functions

The Standard will Apply to the Following Functions *(Check box for each one that applies.)*		
☐	Reliability Coordinator	Responsible for the real-time operating reliability of its Reliability Coordinator Area in coordination with its neighboring Reliability Coordinator's wide area view.
☐	Balancing Authority	Integrates resource plans ahead of time, and maintains load-interchange-resource balance within a Balancing Authority Area and supports Interconnection frequency in real time.
☐	Interchange Authority	Ensures communication of interchange transactions for reliability evaluation purposes and coordinates implementation of valid and balanced interchange schedules between Balancing Authority Areas.
☐	Planning Coordinator	Assesses the longer-term reliability of its Planning Coordinator Area.
☐	Resource Planner	Develops a >one year plan for the resource adequacy of its specific loads within a Planning Coordinator area.
☐	Transmission Planner	Develops a >one year plan for the reliability of the interconnected Bulk Electric System within its portion of the Planning Coordinator area.
☐	Transmission Service Provider	Administers the transmission tariff and provides transmission services under applicable transmission service agreements (e.g., the pro forma tariff).
☒	Transmission Owner	Owns and maintains transmission facilities.
☐	Transmission Operator	Ensures the real-time operating reliability of the transmission assets within a Transmission Operator Area.
☒	Distribution Provider	Delivers electrical energy to the End-use customer.
☒	Generator Owner	Owns and maintains generation facilities.
☐	Generator Operator	Operates generation unit(s) to provide real and reactive power.
☐	Purchasing-Selling Entity	Purchases or sells energy, capacity, and necessary reliability-related services as required.
☐	Market Operator	Interface point for reliability functions with commercial functions.
☐	Load-Serving Entity	Secures energy and transmission service (and reliability-related services) to serve the End-use Customer.

Reliability and Market Interface Principles

Applicable Reliability Principles *(Check box for all that apply.)*	
☒	1. Interconnected bulk electric systems shall be planned and operated in a coordinated manner to perform reliably under normal and abnormal conditions as defined in the NERC Standards.
☒	2. The frequency and voltage of interconnected bulk electric systems shall be controlled within defined limits through the balancing of real and reactive power supply and demand.
☐	3. Information necessary for the planning and operation of interconnected bulk electric systems shall be made available to those entities responsible for planning and operating the systems reliably.
☒	4. Plans for emergency operation and system restoration of interconnected bulk electric systems shall be developed, coordinated, maintained and implemented.
☒	5. Facilities for communication, monitoring and control shall be provided, used and maintained for the reliability of interconnected bulk electric systems.
☐	6. Personnel responsible for planning and operating interconnected bulk electric systems shall be trained, qualified, and have the responsibility and authority to implement actions.
☒	7. The security of the interconnected bulk electric systems shall be assessed, monitored and maintained on a wide area basis.
☐	8. Bulk power systems shall be protected from malicious physical or cyber attacks.

Does the proposed Standard comply with all the following Market Interface Principles? *(Select "yes" or "no" from the drop-down box.)*
1. The planning and operation of bulk electric systems shall recognize that reliability is an essential requirement of a robust North American economy. Yes
2. An Organization Standard shall not give any market participant an unfair competitive advantage.Yes
3. An Organization Standard shall neither mandate nor prohibit any specific market structure. Yes
4. An Organization Standard shall not preclude market solutions to achieving compliance with that Standard. Yes
5. An Organization Standard shall not require the public disclosure of commercially sensitive information. All market participants shall have equal opportunity to access commercially non-sensitive information that is required for compliance with reliability standards. Yes

Related Standards

Standard No.	Explanation

Related SARs

SAR ID	Explanation

Regional Differences

Region	Explanation
ERCOT	None
FRCC	None
MRO	None
NPCC	None
SERC	None
RFC	None
SPP	None
WECC	None

SPCTF Roster

Charles W. Rogers
Chairman / RFC-ECAR Representative
Principal Engineer
Consumers Energy Co.

W. Mark Carpenter
Vice Chairman / ERCOT Representative
System Protection Manager
TXU Electric Delivery

John Mulhausen
FRCC Representative
Manager, Design and Standards
Florida Power & Light Co.

Joseph M. Burdis
ISO/RTO Representative
Senior Consultant / Engineer, Transmission
and Interconnection Planning
PJM Interconnection, L.L.C.

William J. Miller
RFC-MAIN Representative
Consulting Engineer
Exelon Corporation

Deven Bhan
MRO Representative
Electrical Engineer, System Protection
Western Area Power Administration

Philip Tatro
NPCC Representative
Consulting Engineer
National Grid USA

Philip B. Winston
SERC Representative
Manager, Protection and Control
Georgia Power Company

Dean Sikes
SPP Representative
Manager - Transmission Protection, Apparatus, & Metering
Cleco Power

David Angell
WECC Representative
T&D Planning Engineering Leader
Idaho Power Company

W. O. (Bill) Kennedy
Canada Member-at-Large
Principal
b7kennedy & Associates Inc.

John L. Ciufo
Canada Member-at-Large
Manager Reliability Standards (P&C/Telecom)
Hydro One, Inc.

Jim Ingleson
ISO/RTO Representative
Senior Electric System Planning Engineer
New York Independent System Operator

Evan T. Sage
Investor Owned Utility
Senior Engineer
Potomac Electric Power Company

James D. Roberts
Federal
Transmission Planning
Tennessee Valley Authority

Tom Wiedman
NERC Consultant
Wiedman Power System Consulting Ltd.

Henry (Hank) Miller
RFC-ECAR Alternate
Principal Electrical Engineer
American Electric Power

Baj Agrawal
WECC Alternate
Principal Engineer
Arizona Public Service Company

Michael J. McDonald
Senior Principal Engineer, System Protection
Ameren Services Company

Jonathan Sykes
Senior Principal Engineer, System Protection
Salt River Project

Fred Ipock
Senior Engineer - Substations & Protection
City Utilities of Springfield, Missouri

W. O. (Bill) Kennedy
Canada Member-at-Large
Principal
b7kennedy & Associates Inc.

Bob Stuart
Director of Business Development, Principal
T&D Consultant
Elequant, Inc.

NERC
NORTH AMERICAN ELECTRIC
RELIABILITY COUNCIL

NERC SPCTF Assessment of Standards:

- **PRC-005-1 — Transmission and Generation Protection System Maintenance and Testing**
- **PRC-008-0 — Underfrequency Load Shedding Equipment Maintenance Programs**
- **PRC-011-0 — UVLS System Maintenance and Testing**
- **PRC-017-0 — Special Protection System Maintenance and Testing**

DRAFT 1.0
March 8, 2007

A Technical Review of Standards

Prepared by the

System Protection and Controls Task Force

of the

NERC Planning Committee

Table of Contents

Introduction **2**

Executive Summary **2**

Assessment of PRC-005-1 ..... **3**

Purpose *3*

General Comments *3*

Applicability *4*

Requirements *4*

R1 4

R2 5

FERC Assessment of PRC-005-1, PRC-008-0, PRC-011-0, and PRC-017-0 ..... **5**

PRC-005-1 ..... *5*

PRC-008-0 ..... *6*

PRC-011-0 ..... *6*

PRC-017-0 ..... *7*

Other Activities Related to PRC-005-1, PRC-008-0, PRC-011-0, and PRC-017-0 ..... **7**

Conclusions and Recommendations **7**

Appendix A — System Protection and Control Task Force ..... Error! Bookmark not defined.

This report and its attendant Standards Authorization Request were approved by the Planning Committee on March 21, 2007, for forwarding to the Standards Committee.

Introduction

When the original scope for the System Protection and Control Task Force was developed, one of the assigned items was to review all of the existing PRC-series Reliability Standards, to advise the Planning Committee of our assessment, and to develop Standards Authorization Requests, as appropriate, to address any perceived deficiencies.

This report presents the SPCTF's assessment of PRC-005-1 – Transmission and Generation Protection System Maintenance and Testing. The report includes the SPCTF's understanding of the intent of this standard and contains specific observations relative to the existing standard.

The SPCTF sees the parallel intent for each of the PRC-005, PRC-008, PRC-011, and PRC-017 as being maintenance and testing standards for different protective systems. In fact, PRC-005 & PRC-008, and PRC-011 & PRC-017 have very similar format respectively. Since all protective relay systems require some means of maintenance and testing, it would seem that all protective system maintenance and testing could be included in one standard regardless of scheme type. The SPCTF recommends that these four standards be reduced to one standard covering the issues detailed for PRC-005 on maintenance and testing.

These four standards were developed primarily by translating the requirements of an earlier Phase I Planning Standard; thus they have not been previously subjected to a critical review of the Requirements.

Executive Summary

Reliability standards PRC-005, 008, 011, and 017 are intended to assure that Transmission & Generation Protection Systems are maintained and tested so as to provide reliable performance when responding to abnormal system conditions. It is the responsibility of the Transmission Owner, Generation Owner, and Distribution Provider to ensure the Transmission & Generation Protection Systems are maintained and tested in such a manner that the protective systems operate to fulfill their function.

Only PRC-005 will be commented on in detail although the other three standards have the same concerns.

SPCTF concluded that:

- Applicable to all four standards — The listed requirements do not provide clear and sufficient guidance concerning the maintenance and testing of the Protection Systems to achieve the commonly stated purpose which is "To ensure all transmission and generation Protection Systems affecting the reliability of the Bulk Electric System (BES) are maintained and tested."
- Applicable to PRC-017 — Part of the stated purpose in PRC-017 states: "To ensure that maintenance and testing programs are developed and misoperations are analyzed and corrected." The phrase "and misoperations are analyzed and corrected" is not clearly appropriate in a maintenance and testing standard. That is, the purpose is more appropriate in PRC-003 and PRC-004, which relate to the analysis and mitigation of protection system misoperations. Analysis of correct operations or misoperations may be an integral part of condition-based maintenance processes, but need not be mandated in a maintenance standard.
- Applicable to all four standards — The standards should clearly state which power system elements are being addressed.
- Applicable to all four standards — The requirements should reflect the inherent differences between different technologies of protection systems.
- Applicable to all four standards — The terms maintenance programs and testing programs should be clearly defined in the glossary. The terms "maintenance" and "testing" are not interchangeable, and the requirements must be clear in their application. Additional terms may also have to be added to the glossary for clarity.

- Applicable to all four standards — The requirements of the existing standards, as stated, support time-based maintenance and testing, and should be expanded to include condition-based and performance-based maintenance and testing. The R1.2 summary of maintenance and testing procedures needs to have some minimum defined sub-requirements to insure that the stated intent of the standards is met to support review by the compliance monitor.

Assessment of PRC-005-1

Purpose

To ensure all transmission and generation Protection Systems affecting the reliability of the Bulk Electric System (BES) are maintained and tested.

A review of PRC-005 indicates that this standard is intended to assure that all affected entities have adequate maintenance and testing programs for their Protection Systems to ensure reliability. SPCTF agrees with the Purpose statement of PRC-005-1.

General Comments

The SPCTF offers the following general comments:

- None of the requirements within PRC-005-1 specifically indicate what minimum attributes should be included in protective system maintenance and testing procedures.
- For interval-based procedures, no allowable maximum interval is prescribed.
- None of the requirements in the existing PRC-005-1 reflect condition-based or performance-based maintenance and testing criteria.

Standard PRC-005 should clarify that two goals are being covered:

- The maintenance portion should have requirements that keep the protection system equipment operating within manufacturers' design specification throughout the service life.
- The testing portion should have requirements that verify that the functional performance of the protection systems is consistent with the design intent throughout the service life.

Applicability

Applicability 4.3 suggests that the definition of a Protection System in the Glossary of Terms should

> **4.1.** Transmission Owners
>
> **4.2.** Generation Owners
>
> **4.3.** Distribution Providers that owns a transmission Protection System

clarify how a Distribution Provider may be the owner of a transmission Protection System.

Requirements

R1

> **R1.** Each Transmission Owner and any Distribution Provider that owns a transmission Protection System and each Generator Owner that owns a generation Protection System shall have a Protection System maintenance and testing program for Protection Systems that affect the reliability of the BES. The program shall include:
>
> **R1.1.** Maintenance and testing intervals and their basis.
>
> **R1.2.** Summary of maintenance and testing procedures.

The following clarifications should be made to Requirement R1:

1. How is the phrase "that affect the reliability of the BES" to be interpreted? The standard should clearly specify which Protection Systems are subject to the requirements.
2. The standard should clearly specify which components of the Generation Protection System are subject to the requirements.

The following clarifications should be made to Subparts R1.1 & R1.2:

1. Interval-based, condition-based, or performance-based maintenance and testing minimum criteria should be established within R1.1, including, but not limited to the following:
    a. For time-based maintenance and testing programs, maximum maintenance intervals should be specified.
    b. For condition-based or performance-based maintenance and testing programs, the program should have sufficient justification and documentation.
2. Definitions should be established for the terms "maintenance programs" and "testing programs."
3. A minimum set of attributes to be included in maintenance and testing programs should be established within R1.2.

R2

R2. Each Transmission Owner and any Distribution Provider that owns a transmission Protection System and each Generator Owner that owns a generation Protection System shall provide documentation of its Protection System maintenance and testing program and the implementation of that program to its Regional Reliability Organization on request (within 30 calendar days). The documentation of the program implementation shall include:

R2.1. Evidence Protection System devices were maintained and tested within the defined intervals.

R2.2. Date each Protection System device was last tested/maintained

The following clarification should be made to requirement R2:

- The appropriate entity should have their Protection System maintenance program and testing program and associated documentation, including maintenance records and testing records, available to its Regional Reliability Organization and NERC during audits or upon request within 30 days.

FERC Assessment of PRC-005-1, PRC-008-0, PRC-011-0, and PRC-017-0

In the October 20, 2006 Notice of Proposed Rulemaking for adoption of NERC Standards (Docket Number RM06-16-000), the Federal Energy Regulatory Commission commented on these four standards and proposed changes. The observations and proposals are excerpted from the NOPR and included below.

PRC-005-1

The Commission proposes to approve PRC-005-1 as mandatory and enforceable. In addition, we propose to direct that NERC develop modifications to the Reliability Standard as discussed below.

Proposed Reliability Standard PRC-005-1 does not specify the criteria to determine the appropriate maintenance intervals, nor do it specify maximum allowable maintenance intervals for the protections systems. The Commission therefore proposes that NERC include a requirement that maintenance and testing of these protection systems must be carried out within a maximum allowable interval that is appropriate to the type of the protection system and its impact on the reliability of the Bulk-Power System.

Accordingly, giving due weight to the technical expertise of the ERO and with the expectation that the Reliability Standard will accomplish the purpose represented to the Commission by the ERO and that it will improve the reliability of the nation's Bulk-Power System, the Commission proposes to approve Reliability Standard PRC-005-1 as mandatory and enforceable. In addition, pursuant to section 215(d)(5) of the FPA and § 39.5(f) of our regulations, the Commission proposes to direct that NERC submit a modification to PRC-005-1 that includes a requirement that maintenance and testing of a protection system must be carried out within a maximum allowable interval that is appropriate to the type of the protection system and its impact on the reliability of the Bulk-Power System.

PRC-008-0

The Commission notes that the commenters generally share staff's concern that the proposed Reliability Standard does not specify the criteria to determine the appropriate maintenance intervals, nor does it specify maximum allowable maintenance intervals for the protection systems. The Commission agrees and proposes to require NERC to modify the proposed Reliability Standard to include a requirement that maintenance and testing of UFLS programs must be carried out within a maximum allowable interval that is appropriate to the type of relay used and the impact on the reliability of the Bulk-Power System.

Accordingly, the Commission proposes to approve Reliability Standard PRC-008-0 as mandatory and enforceable. In addition, the Commission proposes to direct that NERC submit a modification to PRC-008-0 that includes a requirement that maintenance and testing of UFLS programs must be carried out within a maximum allowable interval appropriate to the relay type and the potential impact on the Bulk-Power System.

PRC-011-0

PRC-011-0 does not specify the criteria to determine the appropriate maintenance intervals, nor does it specify maximum allowable maintenance intervals for the protections systems. The Commission proposes that NERC include a Requirement that maintenance and testing of these UFLS programs must be carried out within a maximum allowable interval that is appropriate to the type of the relay used and the impact of these UFLS on the reliability of the Bulk-Power System.

The Commission believes that Reliability Standard PRC-011-0 serves an important purpose in requiring transmission owners and distribution providers to implement their UVLS equipment maintenance and testing programs. Further, the proposed Requirements are sufficiently clear and objective to provide guidance for compliance.

Accordingly, giving due weight to the technical expertise of the ERO and with the expectation that the Reliability Standard will accomplish the purpose represented to the Commission by the ERO and that it will improve the reliability of the nation's Bulk-Power System, the Commission proposes to approve Reliability Standard PRC-011-0 as mandatory and enforceable. In addition, pursuant to section 215(d)(5) of the FPA and § 39.5(f) of our regulations, the Commission proposes to direct that NERC submit a modification to PRC-011-0 that includes a requirement that maintenance and testing of UVLS programs must be carried out within a maximum allowable interval appropriate to the applicable relay and the impact on the reliability of the Bulk-Power System.

PRC-017-0

PRC-017-0 does not specify the criteria to determine the appropriate maintenance intervals, nor does it specify maximum allowable maintenance intervals for the protections systems. The Commission proposes to require NERC to include a requirement that maintenance and testing of these special protection system programs must be carried out within a maximum allowable interval that is appropriate to the type of relaying used and the impact of these special protection system programs on the reliability of the Bulk-Power System.

Accordingly, giving due weight to the technical expertise of the ERO and with the expectation that the Reliability Standard will accomplish the purpose represented to the Commission by the ERO and that it will improve the reliability of the nation's Bulk-Power System, the Commission proposes to approve Reliability Standard PRC-017-0 as mandatory and enforceable. In addition, pursuant to section 215(d)(5) of the FPA and § 39.5(f) of our regulations, the Commission proposes to direct that NERC submit a modification to PRC-017-0 that: (1) includes a requirement that maintenance and testing of these special protection system programs must be carried out within a maximum allowable interval that is appropriate to the type of relaying used; and (2) identifies the impact of these special protection system programs on the reliability of the Bulk-Power System.

Other Activities Related to PRC-005-1, PRC-008-0, PRC-011-0, and PRC-017-0

These four Standards are contained in several projects and draft SARs as part of the "Draft Reliability Standards Development Plan: 2007–2009", which was approved by the NERC Board of Trustees.

The SPCTF recommends that standards PRC-005-1, PRC-008-0, PRC-011-0, and PRC-017-0 be removed from the separate SARS in the Standards Development Plan, and that they be included in a new Standard Authorization Request for a single Protection System maintenance and testing standard.

Conclusions and Recommendations

PRC-005-1, PRC-008-0, PRC-011-0, and PRC-017-0 require additions, clarifications, and definitions to insure that the Protection Systems are properly maintained and tested.

The SPCTF recommends that standards PRC-005-1, PRC-008-0, PRC-011-0, and PRC-017-0 be removed from the separate SARS in the "Draft Reliability Standards Development Plan: 2007–2009," and that they be included in a new Standard Authorization Request for a single Protection System maintenance and testing standard.

SPCTF submits the attached SAR for that purpose of consolidating PRC-005-1, PRC-008-0, PRC-011-0, and PRC-017-0 into a single standard to the Planning Committee for endorsement.

Standard Review Guidelines

Applicability
Does this reliability standard clearly identify the functional classes of entities responsible for complying with the reliability standard, with any specific additions or exceptions noted? Where multiple functional classes are identified is there a clear line of responsibility for each requirement identifying the functional class and entity to be held accountable for compliance? Does the requirement allow overlapping responsibilities between Registered Entities possibly creating confusion for who is ultimately accountable for compliance?

Does this reliability standard identify the geographic applicability of the standard, such as the entire North American bulk power system, an interconnection, or within a regional entity area? If no geographic limitations are identified, the default is that the standard applies throughout North America.

Does this reliability standard identify any limitations on the applicability of the standard based on electric facility characteristics, such as generators with a nameplate rating of 20 MW or greater, or transmission facilities energized at 200 kV or greater or some other criteria? If no functional entity limitations are identified, the default is that the standard applies to all identified functional entities.

Purpose
Does this reliability standard have a clear statement of purpose that describes how the standard contributes to the reliability of the bulk power system? Each purpose statement should include a value statement.

Performance Requirements
Does this reliability standard state one or more performance requirements, which if achieved by the applicable entities, will provide for a reliable bulk power system, consistent with good utility practices and the public interest?

Does each requirement identify who shall do what under what conditions and to what outcome?

Measurability
Is each performance requirement stated so as to be objectively measurable by a third party with knowledge or expertise in the area addressed by that requirement?

Does each performance requirement have one or more associated measures used to objectively evaluate compliance with the requirement?

If performance results can be practically measured quantitatively, are metrics provided within the requirement to indicate satisfactory performance?

Technical Basis in Engineering and Operations
Is this reliability standard based upon sound engineering and operating judgment, analysis, or experience, as determined by expert practitioners in that particular field?

Completeness
Is this reliability standard complete and self-contained? Does the standard depend on external information to determine the required level of performance?

Consequences for Noncompliance
In combination with guidelines for penalties and sanctions, as well as other ERO and regional entity compliance documents, are the consequences of violating a standard clearly known to the responsible entities?

Clear Language
Is the reliability standard stated using clear and unambiguous language? Can responsible entities, using reasonable judgment and in keeping with good utility practices, arrive at a consistent interpretation of the required performance?

Practicality
Does this reliability standard establish requirements that can be practically implemented by the assigned responsible entities within the specified effective date and thereafter?

Capability Requirements versus Performance Requirements
In general, requirements for entities to have 'capabilities' (this would include facilities for communication, agreements with other entities, etc.) should be located in the standards for certification. The certification requirements should indicate that entities have a responsibility to 'maintain' their capabilities.

Consistent Terminology
To the extent possible, does this reliability standard use a set of standard terms and definitions that are approved through the NERC reliability standards development process?

If the standard uses terms that are included in the NERC Glossary of Terms Used in Reliability Standards, then the term must be capitalized when it is used in the standard. New terms should not be added unless they have a 'unique' definition when used in a NERC reliability standard. Common terms that could be found in a college dictionary should not be defined and added to the NERC Glossary.

Are the verbs on the 'verb list' from the DT Guidelines? If not – do new verbs need to be added to the guidelines or could you use one of the verbs from the verb list?

Violation Risk Factors (Risk Factor)

High Risk Requirement

A requirement that, if violated, could directly cause or contribute to bulk electric system instability, separation, or a cascading sequence of failures, or could place the bulk electric system at an unacceptable risk of instability, separation, or cascading failures;

or a requirement in a planning time frame that, if violated, could, under emergency, abnormal, or restorative conditions anticipated by the preparations, directly cause or contribute to bulk electric system instability, separation, or a cascading sequence of failures, or could place the bulk electric system at an unacceptable risk of instability, separation, or cascading failures, or could hinder restoration to a normal condition.

Medium Risk Requirement

A requirement that, if violated, could directly affect the electrical state or the capability of the bulk electric system, or the ability to effectively monitor and control the bulk electric system. However, violation of a medium risk requirement is unlikely to lead to bulk electric system instability, separation, or cascading failures;

or a requirement in a planning time frame that, if violated, could, under emergency, abnormal, or restorative conditions anticipated by the preparations, directly and adversely affect the electrical state or capability of the bulk electric system, or the ability to effectively monitor, control, or restore the bulk electric system. However, violation of a medium risk requirement is unlikely, under emergency, abnormal, or restoration conditions anticipated by the preparations, to lead to bulk electric system instability, separation, or cascading failures, nor to hinder restoration to a normal condition.

Lower Risk Requirement

A requirement that, if violated, would not be expected to adversely affect the electrical state or capability of the bulk electric system, or the ability to effectively monitor and control the bulk electric system. A requirement that is administrative in nature;

or a requirement in a planning time frame that, if violated, would not, under the emergency, abnormal, or restorative conditions anticipated by the preparations, be expected to adversely affect the electrical state or capability of the bulk electric system, or the ability to effectively monitor, control, or restore the bulk electric system. A planning requirement that is administrative in nature.

Time Horizon

The drafting team should also indicate the time horizon available for mitigating a violation to the requirement using the following definitions:

- **Long-term Planning** — a planning horizon of one year or longer.
- **Operations Planning** — operating and resource plans from day-ahead up to and including seasonal.
- **Same-day Operations** — routine actions required within the timeframe of a day, but not real-time.
- **Real-time Operations** — actions required within one hour or less to preserve the reliability of the bulk electric system.
- **Operations Assessment** — follow-up evaluations and reporting of real time operations.

Violation Severity Levels

The drafting team should indicate a set of violation severity levels that can be applied for the requirements within a standard. ('Violation severity levels' replace existing 'levels of non-compliance.') The violation severity levels must be applied for each requirement and may be combined to cover multiple requirements, as long as it is clear which requirements are included and that all requirements are included.

The violation severity levels should be based on the following definitions:

- **Lower: mostly compliant with minor exceptions** — The responsible entity is mostly compliant with and meets the intent of the requirement but is deficient with respect to one or more minor details. Equivalent score: more than 95% but less than 100% compliant.
- **Moderate: mostly compliant with significant exceptions** — The responsible entity is mostly compliant with and meets the intent of the requirement but is deficient with respect to one or more significant elements. Equivalent score: more than 85% but less than or equal to 95% compliant.
- **High: marginal performance or results** — The responsible entity has only partially achieved the reliability objective of the requirement and is missing one or more significant elements. Equivalent score: more than 70% but less than or equal to 85% compliant.
- **Severe: poor performance or results** — The responsible entity has failed to meet the reliability objective of the requirement. Equivalent score: 70% or less compliant.

Compliance Monitor

Replace, 'Regional Reliability Organization' with 'Regional Entity'

Fill-in-the-blank Requirements

Do not include any 'fill-in-the-blank' requirements. These are requirements that assign one entity responsibility for developing some performance measures without requiring that the performance measures be included in the body of a standard – then require another entity to comply with those requirements.

Every reliability objective can be met, at least at a threshold level, by a North American standard. If we need regions to develop regional standards, such as in under-frequency load shedding, we can always write a uniform North American standard for the applicable functional entities as a means of encouraging development of the regional standards.

Requirements for Regional Reliability Organization

Do not write any requirements for the Regional Reliability Organization. Any requirements currently assigned to the RRO should be re-assigned to the applicable functional entity.

Effective Dates

Must be 1st day of 1st quarter after entities are expected to be compliant – must include time to provide notice to responsible entities of the obligation to comply. If the standard is to be actively monitored, time for the Compliance Monitoring and Enforcement Program to develop reporting instructions and modify the Compliance Data Management System(s) both at NERC and Regional Entities must be provided in the implementation plan. The effective date should be linked to the NERC BOT adoption date.

Associated Documents

If there are standards that are referenced within a standard, list the full name and number of the standard under the section called, 'Associated Documents'.

Functional Model Version 3

Review the requirements against the latest descriptions of the responsibilities and tasks assigned to functional entities as provided in pages 13 through 53 of the draft Functional Model Version 3.

PRC-005-0 — Transmission Protection System Maintenance and Testing

Version 0 Comments:

- This section should not move forward in Version 0. More procedure/data oriented, not really stand alone "standard" material but more tools or reference material for executing a standard
- R3-1.a – should breakers and switches be included in the list?
- M3-2 – what kind of evidence?
- M3-2 The "shall have evidence" phrase is vague and may be unnecessary considering that the requesting entity should know if its requested information is supplied.

Phase III & IV Comments:

- PRC 003 to 005 only address generator (and transmission) protective systems, without defining this term.
- Need to add language to ensure the Regional Requirements focus on the most impactive scenarios
- Modify applicability to clarfify that the requirements are applicable to the following:
- All protection systems on the bulk electric system.
- All generation protection systems whose misoperations impact the bulk electric system
- There is no performance requirement or measure of effectiveness of a maintenance program required by the standard

PRC-008-0 — Underfrequency Load Shedding Equipment Maintenance Programs

Version 0 Comments:

- The language for protection system maintenance and testing programs should be consistant from standard to standard. The requirement in this standard should match Standard 063, Requirement R3-1. This will provide a consistent reporting requirement for all protection system.
- From standard 063.3: The Transmission Owner, Generator Owner and Distribution Provider that owns a transmission protection system shall have a transmission protection system maintenance and testing program in place. The program(s) shall include:
- From Standard 067.3: The Transmission Owner and Distribution Provider with a UFLS program (as required by its Regional Reliability Organization) shall have a UFLS equipment maintenance and testing program in place. This UFLS equipment maintenance and testing program shall include UFLS equipment identification, the schedule for UFLS equipment testing, and the schedule for UFLS equipment maintenance.
- The "shall have evidence" phrase is vague and may be unnecessary considering that the requesting entity should know if its requested information is supplied.

PRC-011-0 — UVLS System Maintenance and Testing

Version 0 Comments:

- The "shall have evidence" phrase is vague and may be unnecessary considering that the requesting entity should know if its requested information is supplied.
- UVLS : Under voltage load shedding should not be a requirement for all parties. Those who have shunt reactors can meet the objective by not shedding load but by shedding shunt reactors. Flexibility in achieving the desired goal is appropriate.

PRC-017-0 — Special Protection System Maintenance and Testing

Version 0 Comments:

- In f, it needs to be changed to require that the last two dates of testing and maintenance are kept. This is necessary to verify an action that is required bi-annually or bi-monthly.
- The "shall have evidence" phrase is vague and may be unnecessary considering that the requesting entity should know if its requested information is supplied.

The new proposed definition of Protection System reads as follows:

Protection System:

- Protective relays which respond to electrical quantities,
- Communications systems necessary for correct operation of protective functions,
- Voltage and current sensing devices providing inputs to protective relays,
- Station dc supply, and
- Control circuitry associated with protective functions through the trip coil(s) of the circuit breakers or other interrupting devices.

NERC

NORTH AMERICAN ELECTRIC RELIABILITY CORPORATION

PRC-005-2 Protection System Maintenance

Supplementary Reference & FAQ

Draft

July 29, 2011

Prepared by the

Protection System Maintenance and Testing Standard Drafting Team

116-390 Village Blvd., Princeton, NJ 08540
609.452.8060 | 609.452.9550 fax
www.nerc.com

Table of Contents

1. Introduction and Summary 4
2. Need for Verifying Protection System Performance 5
2.1 Existing NERC Standards for Protection System Maintenance and Testing 5
2.2 Protection System Definition 6
2.3 Applicability of New Protection System Maintenance Standards 6
2.3.1 Frequently Asked Questions: 7
2.4 Applicable Relays 8
2.4.1 Frequently Asked Questions: 9
3. Protection Systems Product Generations 10
4. Definitions 11
4.1 Frequently Asked Questions: 11
5. Time-Based Maintenance (TBM) Programs 13
5.1 Maintenance Practices 13
5.1.1 Frequently Asked Questions: 15
5.2 Extending Time-Based Maintenance 16
5.2.1 Frequently Asked Question: 17
6. Condition-Based Maintenance (CBM) Programs 18
6.1 Frequently Asked Questions: 19
7. Time-Based Versus Condition-Based Maintenance 20
7.1 Frequently Asked Questions: 20
8. Maximum Allowable Verification Intervals 25
8.1 Maintenance Tests 25
8.1.1 Table of Maximum Allowable Verification Intervals 25
8.1.2 Additional Notes for Tables 1-1 through 1-5 and Table 3 27
8.1.3 Frequently Asked Questions: 28
8.2 Retention of Records 33
8.2.1 Frequently Asked Questions: 34
8.3 Basis for Table 1 Intervals 36
8.4 Basis for Extended Maintenance Intervals for Microprocessor Relays 37
9. Performance-Based Maintenance Process 38
9.1 Minimum Sample Size 39
9.2 Frequently Asked Questions 42
10. Overlapping the Verification of Sections of the Protection System 54

10.1 Frequently Asked Question 55
11. Monitoring by Analysis of Fault Records 55
11.1 Frequently Asked Question 56
12. Importance of Relay Settings in Maintenance Programs 57
12.1 Frequently Asked Questions 58
13. Self-Monitoring Capabilities and Limitations 60
13.1 Frequently Asked Question 61
14. Notification of Protection System Failures 62
15. Maintenance Activities 63
15.1 Protective Relays (Table 1-1) 63
15.1.1 Frequently Asked Question 63
15.2 Voltage & Current Sensing Devices (Table 1-3) 64
15.2.1 Frequently Asked Questions 65
15.3 Control circuitry associated with protective functions (Table 1-5) 67
15.3.1 Frequently Asked Questions 68
15.4 Batteries and DC Supplies (Table 1-4) 69
15.4.1 Frequently Asked Questions 70
15.5 Associated communications equipment (Table 1-2) 81
15.5.1 Frequently Asked Questions 82
15.6 Alarms (Table 2) 85
15.6.1 Frequently Asked Question 85
15.7 Distributed UFLS and UVLS Systems (Table 3) 86
15.8 Examples of Evidence of Compliance 86
15.8.1 Frequently Asked Questions 87
16. References 89
Figures 90
Figure 1: Typical Transmission System 90
Figure 2: Typical Generation System 91
Appendix A 93
Appendix B — Protection System Maintenance Standard Drafting Team 96

This supplementary reference to PRC-005-2 is neither mandatory nor enforceable.

1. Introduction and Summary

NERC currently has four Reliability Standards that are mandatory and enforceable in the United States and address various aspects of maintenance and testing of Protection and Control systems. These standards are:

PRC-005-1 — *Transmission and Generation Protection System Maintenance and Testing*

PRC-008-0 — *Underfrequency Load Shedding Equipment Maintenance Programs*

PRC-011-0 — *UVLS System Maintenance and Testing*

PRC-017-0 — *Special Protection System Maintenance and Testing*

While these standards require that applicable entities have a maintenance program for Protection Systems, and that these entities must be able to demonstrate they are carrying out such a program, there are no specifics regarding the technical requirements for Protection System maintenance programs. Furthermore, FERC Order 693 directed additional modifications respective to Protection System maintenance programs. PRC-005-2 combines and replaces PRC-005, PRC-008, PRC-011 and PRC-017.

2. Need for Verifying Protection System Performance

Protective relays have been described as silent sentinels, and do not generally demonstrate their performance until a fault or other power system problem requires that they operate to protect power system elements, or even the entire Bulk Electric System (BES). Lacking faults, switching operations or system problems, the Protection Systems may not operate, beyond static operation, for extended periods. A misoperation - a false operation of a Protection System or a failure of the Protection System to operate, as designed, when needed - can result in equipment damage, personnel hazards, and wide area disturbances or unnecessary customer outages. Maintenance or testing programs are used to determine the performance and availability of Protection Systems.

Typically, utilities have tested Protection Systems at fixed time intervals, unless they had some incidental evidence that a particular Protection System was not behaving as expected. Testing practices vary widely across the industry. Testing has included system functionality, calibration of measuring devices, and correctness of settings. Typically, a Protection System must be visited at its installation site and, in many cases, removed from service for this testing.

Fundamentally, a Reliability Standard for Protection System Maintenance and Testing requires the performance of the maintenance activities that are necessary to detect and correct plausible age and service related degradation of the Protection System components such that a properly built and commissioned Protection System will continue to function as designed over its service life.

Similarly station batteries which are an important part of the station dc supply are not called upon to provide instantaneous dc power to the Protection System until power is required by the Protection System to operate circuit breakers or interrupting devices to clear faults or to isolate equipment.

2.1 Existing NERC Standards for Protection System Maintenance and Testing

For critical BES protection functions, NERC Standards have required that each utility or asset owner define a testing program. The starting point is the existing Standard PRC-005, briefly restated as follows:

Purpose: To document and implement programs for the maintenance of all Protection Systems affecting the reliability of the Bulk Electric System (BES) so that these Protection Systems are kept in working order.

PRC-005-1 is not specific on where the boundaries of the Protection Systems lie. However, the definition of Protection System in the NERC Glossary of Terms used in Reliability Standards indicates what must be included as a minimum.

At the beginning of the project to develop PRC-005-2, the definition of Protection System was:

Protective relays, associated communications systems, voltage and current sensing devices, station batteries and dc control circuitry.

Applicability: Owners of generation and transmission Protection Systems.

Requirements: The owner shall have a documented maintenance program with test intervals. The owner must keep records showing that the maintenance was performed at the specified intervals.

2.2 Protection System Definition

The most recently approved definition of Protection Systems is:

- Protective relays which respond to electrical quantities,
- communications systems necessary for correct operation of protective functions,
- voltage and current sensing devices providing inputs to protective relays,
- station dc supply associated with protective functions (including station batteries, battery chargers, and non-battery-based dc supply), and
- control circuitry associated with protective functions through the trip coil(s) of the circuit breakers or other interrupting devices.

2.3 Applicability of New Protection System Maintenance Standards

The BES purpose is to transfer bulk power. The applicability language has been changed from the original PRC-005:

"*...affecting the reliability of the Bulk Electric System (BES)…*"

To the present language:

"*…that are installed for the purpose of detecting faults on BES Elements (lines, buses, transformers, etc.).*"

The drafting team intends that this Standard will follow with any definition of the Bulk Electric System. There should be no ambiguity; if the element is a BES element then the Protection System protecting that element should then be included within this Standard. If there is regional variation to the definition then there will be a corresponding regional variation to the Protection Systems that fall under this Standard.

There is no way for the Standard Drafting Team to know whether a specific 230KV line, 115KV line (even 69KV line), for example, should be included or excluded. Therefore, the team set the clear intent that the Standard language should simply be applicable to relays for BES elements.

The BES is a NERC defined term that, from time to time, may undergo revisions. Additionally, there may even be regional variations that are allowed in the present and future definitions. See the NERC glossary of terms for the present, in-force, definition. See the applicable regional reliability organization for any applicable allowed variations.

While this Standard will undergo revisions in the future, this Standard will not attempt to keep up with revisions to the NERC definition of BES but rather simply make BES Protection Systems applicable.

The Standard is applied to Generator Owners (GO) and Transmission Owners (TO) because GO's and TO's have equipment that is BES equipment. The Standard brings in Distribution Providers (DP) because depending on the station configuration of a particular substation, there may be Protection System equipment installed at a non-transmission voltage level (Distribution Provider equipment) that is wholly or partially installed to protect the BES. PRC-005-2 would apply to this equipment. An example is underfrequency load-shedding, which is frequently applied well down into the distribution system to meet PRC-007-0.

As this Standard is intended to replace the existing PRC-005, PRC-008, PRC-011 and PRC-017, those Standards are used in the construction of this revision of PRC-005-1. Much of the original intent of those Standards was carried forward whenever it was possible to continue the intent without a disagreement with FERC Order 693. For example the original PRC-008 was constructed quite differently than the original PRC-005. The drafting team agrees with the intent of this and notes that distributed tripping schemes would have to exhibit multiple failures to trip before they would prove to be significant as opposed to a single failure to trip of, for example, a Transmission Protection System Bus Differential lock-out relay. While many failures of these distribution breakers could add up to be significant, it is also believed that distribution breakers are operated often on just fault clearing duty and therefore the distribution circuit breakers are operated at least as frequently as any requirements that might have appeared in this Standard.

Additionally, since this Standard will now replace PRC-011 it will be important to make the distinction between under-voltage Protection Systems that protect individual loads and Protection Systems that are UVLS schemes that protect the BES. Any UVLS scheme that had been applicable under PRC-011 will now be applicable under this revision of PRC-005-1. An example of an Under-Voltage Load Shedding scheme that is not applicable to this Standard is one in which the tripping action was intended to prevent low distribution voltage to a specific load from a transmission system that was intact except for the line that was out of service, as opposed to preventing a cascading outage or transmission system collapse.

It had been correctly noted that the devices needed for PRC-011 are the very same types of devices needed in PRC-005.

Thus a Standard written for Protection Systems of the BES can easily make the needed requirements for Protection Systems and replace some other Standards at the same time.

2.3.1 Frequently Asked Questions:

What, exactly, is the BES, or Bulk Electric System?
BES is the abbreviation for Bulk Electric System. BES is a term in the Glossary of Terms used in Reliability Standards, and is not being modified within this draft Standard.
NERC's approved definition of Bulk Electric System is:

As defined by the Regional Reliability Organization, the electrical generation resources, transmission lines, interconnections with neighboring systems, and associated equipment, generally operated at voltages of 100 kV or higher. Radial transmission facilities serving only load with one transmission source are generally not included in this definition.

Each Regional Entity implements a definition of the Bulk Electric System that is based on this NERC definition, in some cases, supplemented by additional criteria. These regional definitions have been documented and provided to FERC as part of a *June 14, 2007 Informational Filing*.

Why is Distribution Provider included within the Applicable Entities and as a responsible entity within several of the requirements? Wouldn't anyone having relevant facilities be a Transmission Owner?

Depending on the station configuration of a particular substation, there may be Protection System equipment installed at a non-transmission voltage level (Distribution Provider equipment) that is wholly or partially installed to protect the BES. PRC-005-2 would apply to this equipment. An example is underfrequency load-shedding, which is frequently applied well down into the distribution system to meet PRC-007-0.

We have an Under Voltage Load Shedding (UVLS) system in place that prevents one of our distribution substations from supplying extremely low voltage in the case of a specific transmission line outage. The transmission line is part of the BES. Does this mean that our UVLS system falls within this Standard?

The situation as stated indicates that the tripping action was intended to prevent low distribution voltage to a specific load from a transmission system that was intact except for the line that was out of service, as opposed to preventing cascading outage or transmission system collapse. This Standard is not applicable to this UVLS.

We have a UFLS or UVLS scheme that sheds the necessary load through distribution-side circuit breakers and circuit reclosers. Do the trip-test requirements for circuit breakers apply to our situation?

No. Distributed tripping schemes would have to exhibit multiple failures to trip before they would prove to be significant as opposed to a single failure to trip of, for example, a Transmission Protection System Bus Differential lock-out relay. While many failures of these distribution breakers could add up to be significant, it is also believed that distribution breakers are operated often on just fault clearing duty and therefore the distribution circuit breakers are operated at least as frequently as any requirements that might have appeared in this Standard.

We have a UFLS scheme that, in some locales, sheds the necessary load through non-BES circuit breakers and occasionally even circuit switchers. Do the trip-test requirements for circuit breakers apply to our situation?

If your "non-BES circuit breaker" has been brought into this standard by the inclusion of UFLS requirements and otherwise would not have been brought into this standard, then the answer is that there are no trip-test requirements. For these devices that are otherwise non-BES assets, these tripping schemes would have to exhibit multiple failures to trip before they would prove to be as significant as (for example) a single failure to trip of a Transmission Protection System Bus Differential lock-out relay.

2.4 Applicable Relays

The NERC Glossary definition has a Protection System including relays, dc supply, current and voltage sensing devices, dc control circuitry and associated communications circuits. The relays to which this Standard applies are those protective relays that respond to electrical quantities and provide a trip output to trip coils, dc control circuitry or associated communications equipment. This definition extends to IEEE device # 86 (lockout relay) and IEEE device # 94 (tripping or trip-free relay) as these devices are tripping relays that respond to the trip signal of the protective relay that processed the signals from the current and voltage sensing devices.

Relays that respond to non-electrical inputs or impulses (such as, but not limited to, vibration, pressure, seismic, thermal or gas accumulation) are not included.

2.4.1 Frequently Asked Questions:

Are power circuit reclosers, reclosing relays, closing circuits and auto-restoration schemes covered in this Standard?

No. As stated in Requirement R1, this Standard covers protective relays that use measurements of electrical quantities to determine anomalies and to trip a portion of the BES. Reclosers, reclosing relays, closing circuits and auto-restoration schemes are used to cause devices to close as opposed to electrical-measurement relays and their associated circuits that cause circuit interruption from the BES; such closing devices and schemes are more appropriately covered under other NERC Standards. There is one notable exception: if a Special Protection System incorporates automatic closing of breakers, the related closing devices are part of the SPS and must be tested accordingly.

I use my protective relays only as sources of metered quantities and breaker status for SCADA and EMS through a substation distributed RTU or data concentrator to the control center. What are the maintenance requirements for the relays?

This Standard addresses only devices "that are applied on, or are designed to provide protection for the BES." Protective relays, providing only the functions mentioned in the question, are not included.

Is a Sudden Pressure Relay an auxiliary tripping relay?

No. IEEE C37.2-2008 assigns the device number 94 to auxiliary tripping relays. Sudden pressure relays are assigned device number 63. Sudden pressure relays are excluded from the Standard because it does not utilize voltage and/or current measurements to determine anomalies. Devices that use anything other than electrical detection means are excluded.

My mechanical device does not operate electrically and does not have calibration settings; what maintenance activities apply?

You must conduct a test(s) to verify the integrity of the trip circuit. This Standard does not cover circuit breaker maintenance or transformer maintenance. The Standard also does not cover testing of devices such as sudden pressure relays (63), temperature relays (49), and other relays which respond to mechanical parameters rather than electrical parameters.

The Standard specifically mentions auxiliary and lock-out relays; what is an auxiliary tripping relay?
An auxiliary relay, IEEE Device Number 94, is described in IEEE Standard C37.2-2008 as "A device that functions to trip a circuit breaker, contactor, or equipment; to permit immediate tripping by other devices; or to prevent immediate reclosing of a circuit interrupter if it should open automatically, even though its closing circuit is maintained closed."

What is a lock-out relay?
A lock-out relay, IEEE Device Number 86, is described in IEEE Standard C37.2 as "A device that trips and maintains the associated equipment or devices inoperative until it is reset by an operator, either locally or remotely."

3. Protection Systems Product Generations

The likelihood of failure and the ability to observe the operational state of a critical Protection System, both depends on the technological generation of the relays as well as how long they have been in service. Unlike many other transmission asset groups, protection and control systems have seen dramatic technological changes spanning several generations. During the past 20 years, major functional advances are primarily due to the introduction of microprocessor technology for power system devices such as primary measuring relays, monitoring devices, control systems, and telecommunications equipment.

Modern microprocessor based relays have six significant traits that impact a maintenance strategy:

- Self monitoring capability - the processors can check themselves, peripheral circuits, and some connected substation inputs and outputs such as trip coil continuity. Most relay users are aware that these relays have self monitoring, but are not focusing on exactly what internal functions are actually being monitored. As explained further below, every element critical to the Protection System must be monitored, or else verified periodically.
- Ability to capture fault records showing how the Protection System responded to a fault in its zone of protection, or to a nearby fault for which it is required not to operate.
- Ability to meter currents and voltages, as well as status of connected circuit breakers, continuously during non-fault times. The relays can compute values such as MW and MVAR line flows that are sometimes used for operational purposes such as SCADA.
- Data communications via ports that provide remote access to all of the results of Protection System monitoring, recording, and measurement.
- Ability to trip or close circuit breakers and switches through the Protection System outputs, on command from remote data communications messages or from relay front panel button requests.

- Construction from electronic components some of which have shorter technical life or service life than electromechanical components of prior Protection System generations.

There have been significant advances in the technology behind the other components of Protection Systems. Microprocessors are now a part of Battery Chargers, Associated Communications Equipment, Voltage and Current Measuring Devices and even the control circuitry (in the form of software-latches replacing lock-out relays, etc).

Any Protection System component can have self-monitoring and alarming capability, not just relays. Because of this technology, extended time intervals can find their way into all components of the Protection System.

4. Definitions

Protection System Maintenance Program (PSMP) — An ongoing program by which Protection System components are kept in working order and proper operation of malfunctioning components is restored. A maintenance program for a specific component includes one or more of the following activities:

- Verify — Determine that the component is functioning correctly.
- Monitor — Observe the routine in-service operation of the component.
- Test — Apply signals to a component to observe functional performance or output behavior, or to diagnose problems.
- Inspect — Detect visible signs of component failure, reduced performance and degradation.
- Calibrate — Adjust the operating threshold or measurement accuracy of a measuring element to meet the intended performance requirement.
- Restore — Return malfunctioning components to proper operation.

4.1 Frequently Asked Questions:

Why does PRC-005-2 not specifically require maintenance and testing procedures as reflected in the previous Standard, PRC-005-1?

PRC-005-1 does not require detailed maintenance and testing procedures, but instead requires summaries of such procedures, and is not clear on what is actually required. PRC-005-2 requires a documented maintenance program, and is focused on establishing requirements rather than prescribing methodology to meet those requirements. Between the activities identified in the tables 1-1 through 1-5 and Table 2 (collectively the "Tables"), and the various components of the definition established for a "Protection System Maintenance Program", PRC-005-2 establishes the activities and time-basis for a Protection System Maintenance Program to a level of detail not previously required.

Please clarify what is meant by restore in the definition of maintenance.

The description of "Restore" in the definition of a Protection System Maintenance Program, addresses corrective activities necessary to assure that the component is returned to working order following the discovery of its failure or malfunction. The Maintenance Activities specified in the Tables do not present any requirements related to Restoration; R3 of the Standard does require that the entity "initiate resolution of any identified unresolved maintenance issues". Some examples of restoration (or correction of maintenance-correctable issues) include, but are not limited to, replacement of capacitors in distance relays to bring them to working order; replacement of relays, or other Protection System components, to bring the Protection System to working order; upgrade of electromechanical or solid-state protective relays to micro-processor based relays following the discovery of failed components. Restoration, as used in this context is not to be confused with Restoration rules as used in system operations. Maintenance activity necessarily includes both the detection of problems and the repairs needed to eliminate those problems. This Standard does not identify all of the Protection System problems that must be detected and eliminated, rather it is the intent of this Standard that an entity determines the necessary working order for their various devices and keeps them in working order. If an equipment item is repaired or replaced then the entity can restart the maintenance-time-interval-clock if desired, however the replacement of equipment does not remove any documentation requirements that would have been required to verify compliance with time-interval requirements; in other words do not discard maintenance data that goes to verify your work.

The retention of documentation for new and/or replaced equipment is all about proving that the maintenance intervals had been in compliance. For example, a long range plan of upgrades might lead an entity to ignore required maintenance; retaining the evidence of prior maintenance that existed before any retirements and upgrades proves compliance with the Standard.

5. Time-Based Maintenance (TBM) Programs

Time-based maintenance is the process in which Protection Systems are maintained or verified according to a time schedule. The scheduled program often calls for technicians to travel to the physical site and perform a functional test on Protection System components. However, some components of a TBM program may be conducted from a remote location - for example, tripping a circuit breaker by communicating a trip command to a microprocessor relay to determine if the entire Protection System tripping chain is able to operate the breaker. Similarly, all Protection System components can have the ability to remotely conduct tests, either on-command or routinely, the running of these tests can extend the time interval between hands-on maintenance activities.

5.1 Maintenance Practices

Maintenance and testing programs often incorporate the following types of maintenance practices:

- TBM – time-based maintenance – externally prescribed maximum maintenance or testing intervals are applied for components or groups of components. The intervals may have been developed from prior experience or manufacturers' recommendations. The TBM verification interval is based on a variety of factors, including experience of the particular asset owner, collective experiences of several asset owners who are members of a country or regional council, etc. The maintenance intervals are fixed, and may range in number of months or in years.

  TBM can include review of recent power system events near the particular terminal. Operating records may verify that some portion of the Protection System has operated correctly since the last test occurred. If specific protection scheme components have demonstrated correct performance within specifications, the maintenance test time clock can be reset for those components.

- PBM – Performance-Based Maintenance - intervals are established based on analytical or historical results of TBM failure rates on a statistically significant population of similar components. Some level of TBM is generally followed. Statistical analyses accompanied by adjustments to maintenance intervals are used to justify continued use of PBM-developed extended intervals when test failures or in-service failures occur infrequently.

- CBM – condition-based maintenance – continuously or frequently reported results from non-disruptive self monitoring of components demonstrate operational status as those components remain in service. Whatever is verified by CBM does not require manual testing, but taking advantage of this requires precise technical focus on exactly what parts are included as part of the self diagnostics. While the term "Condition-Based-Maintenance" (CBM) is no longer used within the Standard itself, it is important to note that the concepts of CBM are a part of the Standard (in the form of extended time intervals through status-monitoring). These extended time intervals are only allowed (in the absence of PBM) if the condition of the device is monitored (CBM). As a consequence of the "monitored-basis-time-intervals" existing within the Standard the explanatory discussions within this Supplementary Reference concerned with CBM will remain in this reference and are discussed as CBM.

  Microprocessor based Protection System components that perform continuous self-monitoring verify correct operation of most components within the device. Self-monitoring capabilities may include battery continuity, float voltages, unintentional grounds, the ac signal inputs to a relay, analog measuring circuits, processors and memory for measurement, protection, and data communications, trip circuit monitoring, and protection or data communications signals (and many, many more measurements). For those conditions, failure of a self-monitoring routine generates an alarm and may inhibit operation to avoid false trips. When internal components, such as critical output relay contacts, are not equipped with self-monitoring, they can be manually tested. The method of testing may be local or remote, or through inherent performance of the scheme during a system event.

The TBM is the overarching maintenance process of which the other types are subsets. Unlike TBM, PBM intervals are adjusted based on good or bad experiences. The CBM verification intervals can be hours or even milliseconds between non-disruptive self monitoring checks within or around components as they remain in service.

TBM, PBM, and CBM can be combined for individual components, or within a complete Protection System. The following diagram illustrates the relationship between various types of maintenance practices described in this section. In the Venn diagram the overlapping regions show the relationship of TBM with PBM historical information and the inherent continuous monitoring offered through CBM.

This figure shows:

- Region 1: The TBM intervals that are increased based on known reported operational condition of individual components that are monitoring themselves.
- Region 2: The TBM intervals that are adjusted up or down based on results of analysis of maintenance history of statistically significant population of similar products that have been subject to TBM.
- Region 3: Optimal TBM intervals based on regions 1 and 2.

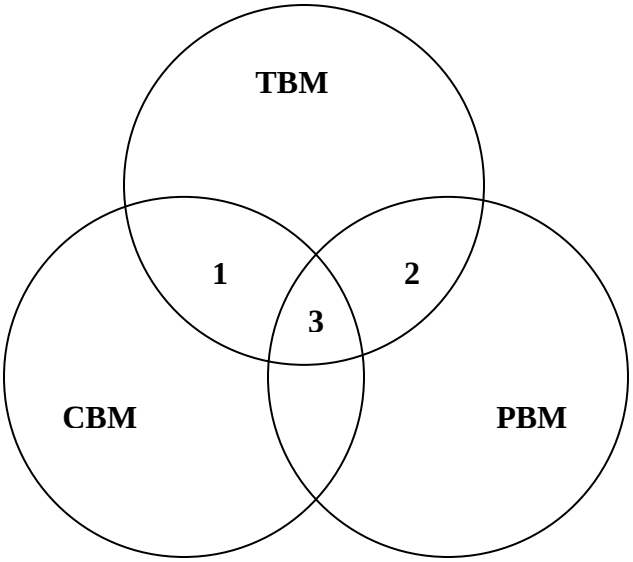

Relationship of time-based maintenance types

5.1.1 Frequently Asked Questions:

The Standard seems very complicated, and is difficult to understand. Can it be simplified?

Because the Standard is establishing parameters for condition-based Maintenance (R1) and Performance-Based Maintenance (R2) in addition to simple time-based Maintenance, it does appear to be complicated. At its simplest, an entity needs to ONLY perform time-based maintenance according to the unmonitored rows of the Tables. If an entity then wishes to take advantage of monitoring on its Protection System components and its available lengthened time intervals then it may, as long as the component has the listed monitoring attributes. If an entity wishes to use historical performance of its Protection System components to perform Performance-Based Maintenance, then R2 applies.

Please see the following diagram, which provides a “flow chart” of the Standard.

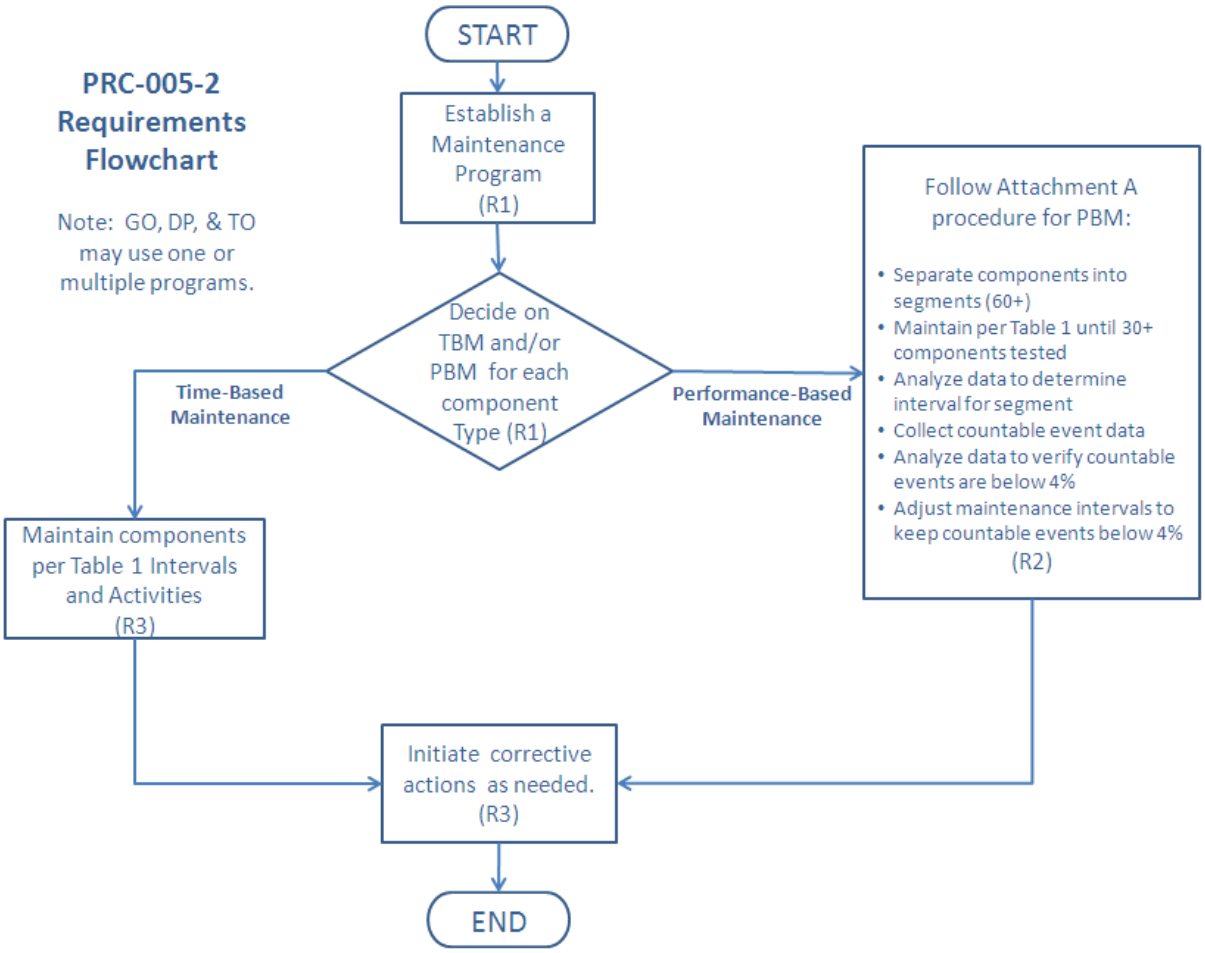

We have an electromechanical (unmonitored) relay that has a trip output to a lockout relay (unmonitored) which trips our transformer off-line by tripping the transformer's high-side and low-side circuit breakers. What testing must be done for this system?
This system is made up of components that are all unmonitored. Assuming a time-based Protection System maintenance program schedule (as opposed to a Performance-Based maintenance program), each component must be maintained per the most frequent hands-on activities listed in the Tables 1-1 through 1-5.

5.2 Extending Time-Based Maintenance

All maintenance is fundamentally time-based. Default time-based intervals are commonly established to assure proper functioning of each component of the Protection System, when data on the reliability of the components is not available other than observations from time-based maintenance. The following factors may influence the established default intervals:

- If continuous indication of the functional condition of a component is available (from relays or chargers or any self monitoring device), then the intervals may be extended or

manual testing may be eliminated. This is referred to as condition-based maintenance or CBM. CBM is valid only for precisely the components subject to monitoring. In the case of microprocessor-based relays, self-monitoring may not include automated diagnostics of every component within a microprocessor.

- Previous maintenance history for a group of components of a common type may indicate that the maintenance intervals can be extended while still achieving the desired level of performance. This is referred to as Performance-Based Maintenance or PBM. It is also sometimes referred to as reliability-centered maintenance or RCM, but PBM is used in this document.
- Observed proper operation of a component may be regarded as a maintenance verification of the respective component or element in a microprocessor-based device. For such an observation, the maintenance interval may be reset only to the degree that can be verified by data available on the operation. For example, the trip of an electromechanical relay for a fault verifies the trip contact and trip path, but only through the relays in series that actually operated; one operation of this relay cannot verify correct calibration.

Excessive maintenance can actually decrease the reliability of the component or system. It is not unusual to cause failure of a component by removing it from service and restoring it. The improper application of test signals may cause failure of a component. For example, in electromechanical overcurrent relays, test currents have been known to destroy convolution springs.

In addition, maintenance usually takes the component out of service, during which time it is not able to perform its function. Cutout switch failures, or failure to restore switch position, commonly lead to protection failures.

5.2.1 Frequently Asked Question:

If I show the protective device out of service while it is being repaired then can I add it back as a new protective device when it returns? If not, my relay testing history would show that I was out of compliance for the last maintenance cycle.

The maintenance and testing requirements (R3) (in essence) state "…shall implement and follow its PSMP …" if not then actions must be initiated to correct the deviance. The type of corrective activity is not stated; however it could include repairs or replacements.

Your documentation requirements will increase, of course, to demonstrate that your device tested bad and had corrective actions initiated. Your regional entity could very well ask for documentation showing status of your corrective actions.

6. Condition-Based Maintenance (CBM) Programs

Condition-based maintenance is the process of gathering and monitoring the information available from modern microprocessor-based relays and other intelligent electronic devices (IEDs) that monitor Protection System elements. These devices generate monitoring information during normal operation, and the information can be assessed at a convenient location remote from the substation. The information from these relays and IEDs is divided into two basic types:

1. Information can come from background self-monitoring processes, programmed by the manufacturer, or by the user in device logic settings. The results are presented by alarm contacts or points, front panel indications, and by data communications messages.
2. Information can come from event logs, captured files, and/or oscillographic records for faults and disturbances, metered values, and binary input status reports. Some of these are available on the device front panel display, but may be available via data communications ports. Large files of fault information can only be retrieved via data communications. These results comprise a mass of data that must be further analyzed for evidence of the operational condition of the Protection System.

Using these two types of information, the user can develop an effective maintenance program carried out mostly from a central location remote from the substation. This approach offers the following advantages:

1. Non-invasive Maintenance: The system is kept in its normal operating state, without human intervention for checking. This reduces risk of damage, or risk of leaving the system in an inoperable state after a manual test. Experience has shown that keeping human hands away from equipment known to be working correctly enhances reliability.
2. Virtually Continuous Monitoring: CBM will report many hardware failure problems for repair within seconds or minutes of when they happen. This reduces the percentage of problems that are discovered through incorrect relaying performance. By contrast, a hardware failure discovered by TBM may have been there for much of the time interval between tests, and there is a good chance that some devices will show health problems by incorrect operation before being caught in the next test round. The frequent or continuous nature of CBM makes the effective verification interval far shorter than any required TBM maximum interval.

6.1 Frequently Asked Questions:

My microprocessor relays and dc circuit alarms are contained on relay panels in a 24-hour attended control room. Does this qualify as an extended time interval condition-based system?
Yes, provided the station attendant (plant operator, etc.) monitors the alarms and other indications (comparable to the monitoring attributes) and reports them within the given time limits that are stated in the criteria of the Tables.

When documenting the basis for inclusion of components into the appropriate levels of monitoring as per Requirement R1.4 of the Standard, is it necessary to provide this documentation about the device by listing of every component and the specific monitoring attributes of each device?
No. While maintaining this documentation on the device level would certainly be permissible, it is not necessary. Global statements can be made to document appropriate levels of monitoring for the entire population of a component type or portion thereof.

For example, it would be permissible to document the conclusion that all BES substation dc supply battery chargers are Monitored by stating the following within the program description:

> "All substation dc supply battery chargers are considered Monitored and subject to the rows for monitored equipment of Table 1-4 requirements as all substation dc supply battery chargers are equipped with dc voltage alarms and ground detection alarms that are sent to the manned control center."

Similarly, it would be acceptable to use a combination of a global statement and a device level list of exclusions. Example:

> "Except as noted below, all substation dc supply battery chargers are considered Monitored and subject to the rows for monitored equipment of Table 1-4 requirements as all substation dc supply battery chargers are equipped with dc voltage alarms and ground detection alarms that are sent to the manned control center. The dc supply battery chargers of Substation X, Substation Y, and Substation Z are considered Unmonitored and subject to the rows for unmonitored equipment in Table 1-4 requirements as they are not equipped with ground detection capability."

Regardless whether this documentation is provided by device listing of monitoring attributes, by global statements of the monitoring attributes of an entire population of component types, or by some combination of these methods, it should be noted that auditors may request supporting drawings or other documentation necessary to validate the inclusion of the device(s) within the appropriate level of monitoring. This supporting background information need not be maintained within the program document structure but should be retrievable if requested by an auditor.

7. Time-Based Versus Condition-Based Maintenance

Time-based and condition-based maintenance programs are both acceptable, if implemented according to technically sound requirements. Practical programs can employ a *combination of time-based and condition-based maintenance.* The Standard requirements introduce the concept of optionally using condition monitoring as a documented element of a maintenance program.

The Federal Energy Regulatory Commission (FERC), in its Order Number 693 Final Rule dated March 16, 2007 (18 CFR Part 40, Docket No. RM06-16-000) on Mandatory Reliability Standards for the Bulk-Power System, directed NERC to submit a modification to PRC-005-1 that includes a requirement that maintenance and testing of a Protection System must be carried out within a maximum allowable interval that is appropriate to the type of the Protection System and its impact on the reliability of the Bulk Power System. Accordingly, this Supplementary Reference Paper refers to the specific maximum allowable intervals in PRC-005-2. The defined time limits allow for longer time intervals if the maintained component is monitored.

A key feature of condition-based monitoring is that it effectively reduces the time delay between the moment of a protection failure and time the Protection System owner knows about it, for the monitored segments of the Protection System. In some cases, the verification is practically continuous - the time interval between verifications is minutes or seconds. Thus, technically sound, condition-based verification, meets the verification requirements of the FERC order even more effectively than the strictly time-based tests of the same system components.

The result is that:

This NERC Standard permits utilities to use a technically sound approach and to take advantage of remote monitoring, data analysis, and control capabilities of modern Protection Systems to reduce the need for periodic site visits and invasive testing of components by on-site technicians. This periodic testing must be conducted within the maximum time intervals specified in Tables 1-1 through 1-5 and Table 2 of PRC-005-2.

7.1 Frequently Asked Questions:

What is a Calendar Year?
Calendar Year - January 1 through December 31 of any year. As an example, if an event occurred on June 17, 2009 and is on a “One Calendar Year Interval”, the next event would have to occur on or before December 31, 2010.

Please provide an example of “3 Calendar Months”.
If a maintenance activity is described as being needed every 3 Calendar Months then it is performed in a (given) month and due again 3 months later. For example a battery bank is inspected in month number 1 then it is due again in month number 4. And specifically consider that you perform your battery inspection on January 3, 2010 then it must be inspected again before the end of April. Another example could be that a 3-month inspection was performed in January is due in April, but if performed in March (instead of April) would still be due three

months later therefore the activity is due again June. Basically every "3 Calendar Months" means to add 3 months from the last time the activity was performed.

Please provide an example of the unmonitored versus other levels of monitoring available?
An unmonitored Protection System has no monitoring and alarm circuits on the Protection System components. A Protection System component that has monitoring attributes but no alarm output connected is considered to be unmonitored.

A monitored Protection System or an individual monitored component of a Protection System has monitoring and alarm circuits on the Protection System components. The alarm circuits must alert, within 24 hours, a location wherein corrective action can be initiated. This location might be, but not limited to an Operations Center, Dispatch Office, Maintenance Center or even a portable SCADA system.

There can be a combination of monitored and unmonitored Protection Systems within any given scheme, substation or plant; there can also be a combination of monitored and unmonitored components within any given Protection System.

Example #1: A combination of monitored and unmonitored components within a given Protection System might be:

- A microprocessor relay with an internal alarm connected to SCADA to alert 24-hr staffed operations center; it has internal self diagnosis and alarming. (monitored)
- Instrumentation transformers, with no monitoring, connected as inputs to that relay. (unmonitored)
- A Vented Lead-Acid battery with a low voltage alarm for the station dc supply voltage and an unintentional grounds detection alarm connected to SCADA. (monitoring varies)
- A circuit breaker with a trip coil and the trip circuit is not monitored. (unmonitored)

Given the particular components and conditions, and using Table 1 and Table 2 , the particular components have maximum activity intervals of:

Every 3 calendar months, verify:

- Electrolyte level (station dc supply voltage and unintentional ground detection is being maintained more frequently by the monitoring system).

Every 18 calendar months, verify/inspect the following:

- Battery bank ohmic values to station battery baseline (if performance tests are not opted)
- Battery charger float voltage
- Battery rack integrity
- Cell condition of all individual battery cells (where visible)
- Battery continuity
- Battery terminal connection resistance

- Battery cell-to-cell resistance (where available to measure)

Every 6 calendar years, perform/verify the following:

- Battery performance test (if ohmic tests are not opted)
- Verify that each trip coil is able to operate the circuit breaker, interrupting device, or mitigating device
- For electromechanical lock-out relays and auxiliary relays, electrical operation of electromechanical trip and auxiliary devices

Every 12 calendar years, verify the following:

- Microprocessor relay settings are as specified
- Operation of the microprocessor's relay inputs and outputs that are essential to proper functioning of the Protection System
- Acceptable measurement of power system input values seen by the microprocessor protective relay
- Verify that current and voltage signal values are provided to the protective relays
- Protection System component monitoring for the battery system signals are conveyed to a location where corrective action can be initiated
- The microprocessor relay alarm signals are conveyed to a location where corrective action can be initiated
- Verify all trip paths in the control circuitry associated with protective functions through the trip coil(s) of the circuit breakers or other interrupting devices

Example #2: A combination of monitored and unmonitored components within a given Protection System might be:

- A microprocessor relay with integral alarm that is not connected to SCADA. (unmonitored)
- Current and voltage signal values, with no monitoring, connected as inputs to that relay. (unmonitored)
- A Vented Lead-Acid battery with a low voltage alarm for the station dc supply voltage and an unintentional grounds detection alarm connected to SCADA. (monitoring varies)
- A circuit breaker with a trip coil, with no circuits monitored. (unmonitored)

Given the particular components and conditions, and using the Table 1 ("Maximum Allowable Testing Intervals and Maintenance Activities") and Table 2 ("Alarming Paths and Monitoring"), the particular components have maximum activity intervals of:

Every 3 calendar months, verify:

- Electrolyte level (Station dc supply voltage and unintentional ground detection is being maintained more frequently by the monitoring system)

Every 18 calendar months, verify/inspect the following:

- Battery bank ohmic values to station battery baseline (if performance tests are not opted)
- Battery charger float voltage
- Battery rack integrity
- Cell condition of all individual battery cells (where visible)
- Battery continuity
- Battery terminal connection resistance
- Battery cell-to-cell resistance (where available to measure)

Every 6 calendar years, verify/perform the following:

- Verify operation of the relay inputs and outputs that are essential to proper functioning of the Protection System
- Verify acceptable measurement of power system input values as seen by the relays
- Verify that each trip coil is able to operate the circuit breaker, interrupting device, or mitigating device
- For electromechanical lock-out relays and auxiliary relays, electrical operation of electromechanical trip and auxiliary devices
- Battery performance test (if ohmic tests are not opted)

Every 12 calendar years, verify the following:

- Verify that current and voltage signal values are provided to the protective relays
- Verify that Protection System component monitoring for the battery system signals are conveyed to a location where corrective action can be initiated
- Verify all trip paths in the control circuitry associated with protective functions through the trip coil(s) of the circuit breakers or other interrupting devices **Example #3:** A combination of monitored and unmonitored components within a given Protection System might be:
    - A microprocessor relay with alarm connected to SCADA to alert 24-hr staffed operations center; it has internal self diagnosis and alarms. (monitored)
    - Current and voltage signal values, with monitoring, connected as inputs to that relay (monitored)
    - Vented Lead-Acid battery without any alarms connected to SCADA (unmonitored)
    - Circuit breaker with a trip coil, with no circuits monitored (unmonitored)

Given the particular components, conditions, and using the Table 1 ("Maximum Allowable Testing Intervals and Maintenance Activities") and Table 2 ("Alarming Paths and Monitoring"), the particular components shall have maximum activity intervals of:

Every 3 calendar months, verify/inspect the following:

- Station dc supply voltage
- For unintentional grounds
- Electrolyte level

Every 18 calendar months, verify/inspect the following:

- Battery bank ohmic values to station battery baseline (if performance tests are not opted)
- Battery charger float voltage
- Battery rack integrity
- Battery continuity
- Battery terminal connection resistance
- Battery cell-to-cell resistance (where available to measure)
- Cell condition of all individual battery cells (where visible)

Every 6 calendar years, perform/verify the following:

- Battery performance test (if ohmic tests are not opted)
- Verify that each trip coil is able to operate the circuit breaker, interrupting device, or mitigating device
- For electromechanical lock-out relays and auxiliary relays, electrical operation of electromechanical trip and auxiliary devices

Every 12 calendar years, verify the following:

- The microprocessor relay alarm signals are conveyed to a location where corrective action can be taken
- Microprocessor relay settings are as specified
- Operation of the microprocessor's relay inputs and outputs that are essential to proper functioning of the Protection System
- Acceptable measurement of power system input values seen by the microprocessor protective relay
- Verify all trip paths in the control circuitry associated with protective functions through the trip coil(s) of the circuit breakers or other interrupting devices

Why do components have different maintenance activities and intervals if they are monitored?

The intent behind different activities and intervals for monitored equipment is to allow less frequent manual intervention when more information is known about the condition of Protection System components. Condition-Based Maintenance is a valuable asset to improve reliability.

Can all components in a Protection System be monitored?

No. For some components in a Protection System, monitoring will not be relevant. For example a battery will always need some kind of inspection.

We have a 30 year old oil circuit breaker with a red indicating lamp on the substation relay panel that is illuminated only if there is continuity through the breaker trip coil. There is no SCADA monitor or relay monitor of this trip coil. The line protection relay package that trips this circuit breaker is a microprocessor relay that has an integral alarm relay that will assert on a number of conditions that includes a loss of power to the relay. This alarm contact connects to our SCADA system and alerts our 24-hour operations center of relay trouble when the alarm contact closes. This microprocessor relay trips the circuit breaker only and does not monitor trip coil continuity or other things such as trip current. Are the components monitored or not? How often must I perform maintenance?
The protective relay is monitored and can be maintained every 12 years or when a unresolved maintenance issue arises. The control circuitry can be maintained every 12 years. The trip coil(s) has to be electrically operated at least once every 6 years.

8. Maximum Allowable Verification Intervals

The Maximum Allowable Testing Intervals and Maintenance Activities show how CBM with newer device types can reduce the need for many of the tests and site visits that older Protection System components require. As explained below, there are some sections of the Protection System that monitoring or data analysis may not verify. Verifying these sections of the Protection Systems requires some persistent TBM activity in the maintenance program. However, some of this TBM can be carried out remotely - for example, exercising a circuit breaker through the relay tripping circuits using the relay remote control capabilities can be used to verify function of one tripping path and proper trip coil operation, if there has been no fault or routine operation to demonstrate performance of relay tripping circuits.

8.1 Maintenance Tests

Periodic maintenance testing is performed to ensure that the protection and control system is operating correctly after a time period of field installation. These tests may be used to ensure that individual components are still operating within acceptable performance parameters - this type of test is needed for components susceptible to degraded or changing characteristics due to aging and wear. Full system performance tests may be used to confirm that the total Protection System functions from measurement of power system values, to properly identifying fault characteristics, to the operation of the interrupting devices.

8.1.1 Table of Maximum Allowable Verification Intervals

Table 1 (collectively known as Table 1, individually called out as Tables 1-1 through 1-5), in the Standard, specifies maximum allowable verification intervals for various generations of Protection Systems and categories of equipment that comprise Protection Systems. The right column indicates maintenance activities required for each category.

The types of components are illustrated in Figures 1 and 2 at the end of this paper. Figure 1 shows an example of telecommunications-assisted line Protection System comprising substation equipment at each terminal and a telecommunications channel for relaying between the two substations. Figure 2 shows an example of a Generation station layout. The various subsystems of a Protection System that need to be verified are shown.

Non-distributed UFLS, UVLS, and SPS are additional categories of Table 1 that are not illustrated in these figures. Non-distributed UFLS, UVLS and SPS all use identical equipment as Protection Systems in the performance of their functions and therefore have the same maintenance needs.

Distributed UFLS and UVLS systems, which use local sensing on the distribution system and trip co-located non-BES interrupting devices, are addressed in Table 3 with reduced maintenance activities.

While it is easy to associate protective relays to multiple levels of monitoring, it is also true that most of the components that can make up a Protection System can also have technological advancements that place them into higher levels of monitoring.

To use the Maintenance Activities and Intervals Tables from PRC-005-2:

- First find the Table associated with your component. The tables are arranged in the order of mention in the definition of Protection System;
    - Table 1-1 is for protective relays,
    - Table 1-2 is for the associated communications systems,
    - Table 1-3 is for current and voltage sensing devices,
    - Table 1-4 is for station dc supply and
    - Table 1-5 is for control circuits. There is an additional table,
    - Table 2, which brings alarms into the maintenance arena; this was broken out to simplify the other tables.
    - Table 3 presents the maintenance activities and intervals for protective relays, current and voltage sensing devices, station dc supply, and control circuitry for distributed UFLS and UVLS systems.
- Next look within that table for your device and its degree of monitoring. The tables have different hands-on maintenance activities prescribed depending upon the degree to which you monitor your equipment. Find the maintenance activity that applies to the monitoring level that you have on your piece of equipment.
- This Maintenance activity is the minimum maintenance activity that must be documented.
- If your PSMP (plan) requires more activities then you must perform and document to this higher standard.
- After the maintenance activity is known, check the Maximum Maintenance Interval; this time is the maximum time allowed between hands-on maintenance activity cycles of this component.

- If your PSMP (plan) requires activities more often than the Tables maximum then you must perform and document those activities to your more stringent standard.
- Any given component of a Protection System can be determined to have a degree of monitoring that may be different from another component within that same Protection System. For example, in a given Protection System it is possible for an entity to have a monitored protective relay and an unmonitored associated communications system; this combination would require hands-on maintenance activity on the relay at least once every 12 years and attention paid to the communications system as often as every 3 months.
- An entity does not have to utilize the extended time intervals made available by this use of condition-based monitoring. An easy choice to make is to simply utilize the unmonitored level of maintenance made available on each of the 5 Tables. While the maintenance activities resulting from this choice would require more maintenance man-hours, the maintenance requirements may be simpler to document and the resulting maintenance plans may be easier to create.

For each Protection System component, Table 1 shows maximum allowable testing intervals for the various degrees of monitoring. These degrees of monitoring, or levels, range from the legacy unmonitored through a system that is more comprehensively monitored.

It has been noted here that an entity may have a PSMP that is more stringent than PRC-005-2. There may be any number of reasons that an entity chooses a more stringent plan than the minimums prescribed within PRC-005-2, most notable of which is an entity using performance based maintenance methodology. (Another reason for having a more stringent plan than is required could be a regional entity could have more stringent requirements.) Regardless of the rationale behind an entity's more stringent plan, it is incumbent upon them to perform the activities, and perform them at the stated intervals, of the entity's PSMP. A quality PSMP will help assure system reliability and adhering to any given PSMP should be the goal.

8.1.2 Additional Notes for Tables 1-1 through 1-5 and Table 3

1. For electromechanical relays, adjustment is required to bring measurement accuracy within the tolerance needed by the asset owner. Microprocessor relays with no remote monitoring of alarm contacts, etc, are unmonitored relays and need to be verified within the Table interval as other unmonitored relays but may be verified as functional by means other than testing by simulated inputs.

2. Microprocessor relays typically are specified by manufacturers as not requiring calibration, but acceptable measurement of power system input values must be verified (verification of the Analog to Digital [A/D] converters) within the Table intervals. The integrity of the digital inputs and outputs that are used as protective functions must be verified within the Table intervals.
3. Any Phasor Measurement Unit (PMU) function whose output is used in a Protection System or SPS (as opposed to a monitoring task) must be verified as a component in a Protection System.
4. In addition to verifying the circuitry that supplies dc to the Protection System, the owner must maintain the station dc supply. The most widespread station dc supply is the station

battery and charger. Unlike most Protection System components physical inspection of station batteries for signs of component failure, reduced performance, and degradation are required to ensure that the station battery is reliable enough to deliver dc power when required. IEEE Standards 450, 1188, and 1106 for Vented Lead-Acid, Valve-Regulated Lead-Acid, and Nickel-Cadmium batteries, respectively (which are the most commonly used substation batteries on the NERC BES) have been developed as an important reference source of maintenance recommendations. The Protection System owner might use the applicable IEEE recommended practice which contains information and recommendations concerning the maintenance, testing and replacement of its substation battery. However, the methods prescribed in these IEEE recommendations cannot be specifically required because they do not apply to all battery applications.

5. Aggregated small entities might distribute the testing of the population of UFLS/UVLS systems, and large entities will usually maintain a portion of these systems in any given year. Additionally, if relatively small quantities of such systems do not perform properly, it will not affect the integrity of the overall program. Thus these distributed systems have decreased requirements as compared to other Protection Systems.
6. Voltage & Current Sensing Device circuit input connections to the Protection System relays can be verified by (but not limited to) comparison of measured values on live circuits or by using test currents and voltages on equipment out of service for maintenance. The verification process can be automated or manual. The values should be verified to be as expected, (phase value and phase relationships are both equally important to verify).
7. "End-to-end test" as used in this Supplementary Reference is any testing procedure that creates a remote input to the local communications-assisted trip scheme. While this can be interpreted as a GPS-type functional test it is not limited to testing via GPS. Any remote scheme manipulation that can cause action at the local trip path can be used to functionally-test the dc Control Circuitry. A documented real-time trip of any given trip path is acceptable in lieu of a functional trip test. It is possible, with sufficient monitoring, to be able to verify each and every parallel trip path that participated in any given dc Control Circuit trip. Or, another possible solution is that a single trip path from a single monitored relay can be verified to be the trip path that successfully tripped during a real-time operation. The variations are only limited by the degree of engineering and monitoring that an entity desires to pursue.
8. A/D verification may use relay front panel value displays, or values gathered via data communications. Groupings of other measurements (such as vector summation of bus feeder currents) can be used for comparison if calibration requirements assure acceptable measurement of power system input values.
9. Notes 1-8 attempt to describe some testing activities; they do not represent the only methods to achieve these activities but rather some possible methods. Technological advances, ingenuity and/or industry accepted techniques can all be used to satisfy maintenance activity requirements; the Standard is technology and method neutral in most cases.

8.1.3 Frequently Asked Questions:

What is meant by "Verify that settings are as specified" maintenance activity in Table 1-1?
Verification of settings is an activity directed mostly towards microprocessor based relays. For relay maintenance departments that choose to test microprocessor based relays in the same manner as electromechanical relays are tested, the testing process sometimes requires that some specific functions be disabled. Later tests might enable the functions previously disabled but perhaps still other functions or logic statements were then masked out. It is imperative that, when the relay is placed into service, the settings in the relay be the settings that were intended to be in that relay or as the Standard states "…settings are as specified."

Many of the microprocessor based relays available today have software tools which provide this functionality and generate reports for this purpose.

For evidence or documentation of this requirement a simple recorded acknowledgement that the settings were checked to be as specified is sufficient.

The drafting team was careful not to require "…that the relay settings be correct…" because it was believed that this might then place a burden of proof that the specified settings would result in the correct intended operation of the interrupting device. While that is a noble intention, the measurable proof of such a requirement is immense. The intent is that settings of the component be as specified at the conclusion of maintenance activities, whether those settings may have "drifted" since the prior maintenance or whether changes were made as part of the testing process.

Are electromechanical relays included in the "Verify that settings are as specified" maintenance activity in Table 1-1?
Verification of settings is an activity directed towards the application of protection related functions of microprocessor based relays. Electromechanical relays require calibration verification by voltage and/or current injection, and thus the settings are verified during calibration activity. In the example of a time-overcurrent relay, a minor deviation in time dial, versus the settings, may be acceptable as long as the relay calibration is within accepted tolerances at the injected current amplitudes. A major deviation may require further investigation, as it could indicate a problem with the relay or an incorrect relay style for the application.

The verification of phase current and voltage measurements by comparison to other quantities seems reasonable. How, though, can I verify residual or neutral currents, or 3V0 voltages, by comparison, when my system is closely balanced?
Since these inputs are verified at commissioning, maintenance verification requires ensuring that phase quantities are as expected and that 3IO and 3VO quantities appear equal to or close to 0. These quantities also may be verified by use of oscillographic records for connected microprocessor relays as recorded during system disturbances. Such records may compare to similar values recorded at other locations by other microprocessor relays for the same event, or compared to expected values (from short circuit studies) for known fault locations.

What does this Standard require for testing an auxiliary tripping relay?
Table 1 and Table 3 requires that a trip test must verify that the auxiliary tripping relay(s) and/or lockout relay(s) which are directly in a trip path from the protective relay to the interrupting

device trip coil operate(s) electrically. Auxiliary outputs not in a trip path (i.e. annunciation or DME input) are not required, by this Standard, to be checked.

Do I have to perform a full end-to-end test of a Special Protection System?
No. All portions of the SPS need to be maintained, and the portions must overlap, but the overall SPS does not need to have a single end-to-end test. In other words it may be tested in piecemeal fashion provided all of the pieces are verified.

What about SPS interfaces between different entities or owners?
As in all of the Protection System requirements, SPS segments can be tested individually thus minimizing the need to accommodate complex maintenance schedules.

What do I have to do if I am using a phasor measurement unit (PMU) as part of a Protection System or Special Protection System?
Any Phasor Measurement Unit (PMU) function whose output is used in a Protection System or Special Protection System (as opposed to a monitoring task) must be verified as a component in a Protection System.

How do I maintain a Special Protection System or relay sensing for non-distributed UFLS or UVLS Systems?
Since components of the SPS, UFLS, and UVLS are the same types of components as those in Protection Systems then these components should be maintained like similar components used for other Protection System functions. In many cases the devices for SPS, UFLS and UVLS are also used for other protective functions. The same maintenance activities apply with the exception that distributed systems (UFLS and UVLS) have fewer dc supply and control circuitry maintenance activity requirements.
For the testing of the output action, verification may be by breaker tripping, but may be verified in overlapping segments. For example an SPS that trips a remote circuit breaker might be tested by testing the various parts of the scheme in overlapping segments. Another method is to document the real-time tripping of an SPS scheme should that occur. Forced trip tests of circuit breakers (etc) that are a part of distributed UFLS or UVLS schemes are not required.

The established maximum allowable intervals do not align well with the scheduled outages for my power plant. Can I extend the maintenance to the next scheduled outage following the established maximum interval?
No. You must complete your maintenance within the established maximum allowable intervals in order to be compliant. You will need to schedule your maintenance during available outages to complete your maintenance as required, even if it means that you may do protective relay maintenance more frequently than the maximum allowable intervals. The maintenance intervals were selected with typical plant outages, among other things, in mind.

If I am unable to complete the maintenance as required due to a major natural disaster (hurricane, earthquake, etc), how will this affect my compliance with this Standard.

The Sanction Guidelines of the North American Electric Reliability Corporation effective January 15, 2008 provides that the Compliance Monitor will consider extenuating circumstances when considering any sanctions.

What if my observed testing results show a high incidence of out-of-tolerance relays, or, even worse, I am experiencing numerous relay misoperations due to the relays being out-of-tolerance?

The established maximum time intervals are mandatory only as a not-to-exceed limitation. The establishment of a maximum is measurable. But, any entity can choose to test some or all of their Protection System components more frequently (or, to express it differently, exceed the minimum requirements of the Standard). Particularly, if you find that the maximum intervals in the Standard do not achieve your expected level of performance, it is understandable that you would maintain the related equipment more frequently. A high incidence of relay Misoperations is in no one's best interest. The BES and an entity's bottom line both suffer.

We believe that the 4-month interval between inspections is unneccessary, why can we not perform these inspections twice per year?

The standard drafting team believes that routine monthly inspections are the norm. To align routine station inspections with other important inspections the 4-month interval was chosen. In lieu of station visits many activities can be accomplished with automated monitoring and alarming.

Our maintenance plan calls for us to perform routine protective relay tests every 3 years; if we are unable to achieve this schedule but we are able to complete the procedures in less than the Maximum Time Interval then are we in or out of compliance?

You are out of compliance. You must maintain your equipment to your stated intervals within your maintenance plan. The protective relays (and any Protection System component) cannot be tested at intervals that are longer than the maximum allowable interval stated in the Tables and yet you must conform to your own maintenance plan. Therefore you should design your maintenance plan such that it is not in conflict with the Minimum Activities and the Maximum Intervals. You then must maintain your equipment according to your maintenance plan. You will end up being compliant with both the Standard and your own plan.

Please provide a sample list of devices or systems that must be verified in a generator, generator step-up transformer, and generator connected station auxiliary transformer to meet the requirements of this Maintenance Standard.

Examples of typical devices and systems that may directly trip the generator, or trip through a lockout relay may include but are not necessarily limited to:

- Fault protective functions, including distance functions, voltage-restrained overcurrent functions, or voltage-controlled overcurrent functions
- Loss-of-field relays
- Volts-per-hertz relays
- Negative sequence overcurrent relays

- Over voltage and under voltage protection relays
- Stator-ground relays
- Communications-based Protection Systems such as transfer-trip systems
- Generator differential relays
- Reverse power relays
- Frequency relays
- Out-of-step relays
- Inadvertent energization protection
- Breaker failure protection

For generator step up or generator-connected station auxiliary transformers, operation of any of the following associated protective relays frequently would result in a trip of the generating unit and, as such, would be included in the program:

- Transformer differential relays
- Neutral overcurrent relay
- Phase overcurrent relays

Relays which trip breakers serving station auxiliary loads such as pumps, fans, or fuel handling equipment, etc., need not be included in the program even if the loss of the those loads could result in a trip of the generating unit. Furthermore, relays which provide protection to secondary unit substation (SUS) or low switchgear transformers and relays protecting other downstream plant electrical distribution system components are not included in the scope of this program even if a trip of these devices might eventually result in a trip of the generating unit. For example, a thermal overcurrent trip on the motor of a coal-conveyor belt could eventually lead to the tripping of the generator, but it does not cause the trip.

In the case where a plant does not have a generator connected station service transformer such that it is normally fed from a system connected station service transformer, is it still the drafting team's intent to exclude the protection systems for these system connected auxiliary transformers from scope even when the loss of the normal (system connected) station service transformer will result in a trip of a BES generating facility?

The SDT does not intend that the system-connected station auxiliary transformers be included in the Applicability. The generator-connected station service transformers are often connected to the generator bus directly without an interposing breaker; thus, the Protection Systems on these transformers will trip the generator as discussed in 4.2.5.1.

What is meant by "verify operation of the relay inputs and outputs that are essential to proper functioning of the Protection System?"

Any input or output (of the relay) that "affects the tripping" of the breaker is included in the scope of I/O of the relay to be verified. By "affects the tripping" one needs to realize that

sometimes there are more Inputs and Outputs than simply the output to the trip coil. Many important protective functions include things like breaker fail initiation, zone timer initiation and sometimes even 52a/b contact inputs are needed for a protective relay to correctly operate.

Each input should be "picked up" or "turned on and off" and verified as changing state by the microprocessor of the relay. Each output should be "operated" or "closed and opened" from the microprocessor of the relay and the output should be verified to change state on the output terminals of the relay. One possible method of testing inputs of these relays is to "jumper" the needed dc voltage to the input and verify that the relay registered the change of state.

Electromechanical lock-out relays (86) and auxiliary tripping relays (94) (used to convey the tripping current to the trip coils) need to be electrically operated to prove the capability of the device to change state. These tests need to be accomplished at least every 6 years, unless PBM methodology is applied.

The contacts on the 86 or 94 that change state to pass on the trip current to a breaker trip coil need only be checked every twelve years with the control circuitry.

What is the difference between a distributed UFLS/UVLS and a non-distributed UFLS/UVLS scheme?

A distributed UFLS or UVLS scheme contains individual relays which make independent load shed decisions based on applied settings and localized voltage and/or current inputs. A distributed scheme may involve an enable/disable contact in the scheme and still be considered a distributed scheme. A non-distributed UFLS or UVLS scheme involves a system where there is some type of centralized measurement and load shed decision being made. A non-distributed UFLS/UVLS scheme is considered similar to an SPS scheme and falls under Table 1 for maintenance activities and intervals.

8.2 Retention of Records

PRC-005-1 describes a reporting or auditing cycle of one year and retention of records for three years. However, with a three year retention cycle, the records of verification for a Protection System might be discarded before the next verification, leaving no record of what was done if a Misoperation or failure is to be analyzed.

PRC-005-2 corrects this by requiring:

The Transmission Owner, Generator Owner, and Distribution Provider shall each retain documentation of the two most recent performances of each distinct maintenance activity for the Protection System components, or to the previous scheduled (on-site) audit date, whichever is longer.

This requirement assures that the documentation shows that the interval between maintenance cycles correctly meets the maintenance interval limits. The requirement is actually alerting the industry to documentation requirements already implemented by audit teams. Evidence of compliance bookending the interval shows interval accomplished instead of proving only your planned interval.

8.2.1 Frequently Asked Questions:

Please use a specific example to demonstrate the data retention requirements.
The data retention requirements are intended to allow the availability of maintenance records to demonstrate that the time intervals in your maintenance plan were upheld. For example: "Company A" has a maintenance plan that requires its electromechanical protective relays be tested, for routine scheduled tests, every 3 calendar years with a maximum allowed grace period of an additional 18 months. This entity would be required to maintain its records of maintenance of its last two routine scheduled tests. Thus its test records would have a latest routine test as well as its previous routine test. The interval between tests is therefore provable to an auditor as being within "Company A's" stated maximum time interval of 4.5 years.

The intent is not to require three test results proving two time intervals, but rather have two test results proving the last interval. The drafting team contends that this minimizes storage requirements while still having minimum data available to demonstrate compliance with time intervals.

Realistically, the Standard is providing advanced notice of audit team documentation requests; this type of information has already been requested by auditors.

If an entity prefers to utilize Performance Based Maintenance then statistical data may well be retained for extended periods to assist with future adjustments in time intervals.

If an equipment item is replaced then the entity can restart the maintenance-time-interval-clock if desired, however the replacement of equipment does not remove any documentation requirements that would have been required to verify compliance with time-interval requirements; in other words do not discard maintenance data that goes to verify your work.

The retention of documentation for new and/or replaced equipment is all about proving that the maintenance intervals had been in compliance. For example, a long range plan of upgrades might lead an entity to ignore required maintenance; retaining the evidence of prior maintenance that existed before any retirements and upgrades proves compliance with the Standard.

What does this Maintenance Standard say about commissioning? Is it necessary to have documentation in your maintenance history of the completion of commission testing?
This Standard does not establish requirements for commission testing. Commission testing includes all testing activities necessary to conclude that a facility has been built in accordance with design. While a thorough commission testing program would include, either directly or indirectly, the verification of all those Protection System attributes addressed by the maintenance activities specified in the Tables of PRC-005-2, verification of the adequacy of initial installation necessitates the performance of testing and inspections that go well beyond these routine maintenance activities. For example, commission testing might set baselines for future tests; perform acceptance tests and/or warranty tests; utilize testing methods that are not generally done routinely like staged-fault-tests.
However, many of the Protection System attributes which are verified during commission testing are not subject to age related or service related degradation and need not be re-verified within an ongoing maintenance program. Example – it is not necessary to re-verify correct terminal strip wiring on an ongoing basis.

PRC-005-2 assumes that thorough commission testing was performed prior to a Protection System being placed in service. PRC-005-2 requires performance of maintenance activities that are deemed necessary to detect and correct plausible age and service related degradation of components such that a properly built and commission tested Protection System will continue to function as designed over its service life.

It should be noted that commission testing frequently is performed by a different organization than that which is responsible for the ongoing maintenance of the Protection System. Furthermore, the commission testing activities will not necessarily correlate directly with the maintenance activities required by the Standard. As such, it is very likely that commission testing records will deviate significantly from maintenance records in both form and content and therefore, it is not necessary to maintain commission testing records within the maintenance program documentation.

Notwithstanding the differences in records, an entity would be wise to retain commissioning records to show a maintenance start date. (See below). An entity that requires that their commissioning tests have, at a minimum, the requirements of PRC-005-2 would help that entity prove time interval maximums by setting the initial time clock.

How do you determine the initial due date for maintenance?

The initial due date for maintenance should be based upon when a Protection System was tested. Alternatively, an entity may choose to use the date of completion of the commission testing of the Protection System component and the system was placed into service as the starting point in determining its first maintenance due dates. Whichever method is chosen, for newly installed Protection Systems the components should not be placed into service until minimum maintenance activities have taken place.

It is conceivable that there can be a (substantial) difference in time between the date of testing as compared to the date placed into service. The use of the "Calendar Year" language can help determine the next due date without too much concern about being non-compliant for missing test dates by a small amount (provided your dates are not already at the end of a year). However, if there is a substantial amount of time difference between testing and in-service dates then the testing date should be followed because it is the degradation of components that is the concern. While accuracy fluctuations may decrease when components are not energized there are cases when degradation can take place even though the device is not energized. Minimizing the time between commissioning tests and in-service dates will help.

If I miss two battery inspections four times out of 100 Protection System components on my transmission system, does that count as 2 percent or 8 percent when counting Violation Severity Level (VSL) for R3?

The entity failed to complete its scheduled program on two of its one hundred Protection System components which would equate to two percent for application to the VSL Table for Requirement R3.

How do I achieve a "grace period" without being out of compliance?

For the purposes of this example, concentrating on just unmonitored protective relays,– Table 1-1 specifies a maximum time interval (between the mandated maintenance activities) of 6

calendar years. Your plan must ensure that your unmonitored relays are tested at least once every 6 calendar years. You could, within your PSMP, require that your unmonitored relays be tested every 4 calendar years with a maximum allowable time extension of 18 calendar months. This allows an entity to have deadlines set for the auto-generation of work orders but still have the flexibility in scheduling complex work schedules. This also allows for that 18 calendar months to act as a buffer, a grace period, in the event of unforeseen events. You will note that this example of a maintenance plan interval has a planned time of 4 years; it also has a built-in time extension allowed within the PSMP and yet does not exceed the maximum time interval allowed by the Standard. So while there are no time extensions allowed beyond the Standard, an entity can still have substantial flexibility to maintain their Protection System components.

8.3 Basis for Table 1 Intervals

When developing the original *Protection System Maintenance – A Technical Reference* in 2007. the SPCTF collected all available data from Regional Entities (REs) on time intervals recommended for maintenance and test programs. The recommendations vary widely in categorization of relays, defined maintenance actions, and time intervals, precluding development of intervals by averaging. The SPCTF also reviewed the 2005 Report [2] of the IEEE Power System Relaying Committee Working Group I-17 (Transmission Relay System Performance Comparison). Review of the I-17 report shows data from a small number of utilities, with no company identification or means of investigating the significance of particular results.

To develop a solid current base of practice, the SPCTF surveyed its members regarding their maintenance intervals for electromechanical and microprocessor relays, and asked the members to also provide definitively-known data for other entities. The survey represented 470 GW of peak load, or 64% of the NERC peak load. Maintenance interval averages were compiled by weighting reported intervals according to the size (based on peak load) of the reporting utility. Thus, the averages more accurately represent practices for the large populations of Protection Systems used across the NERC regions.

The results of this survey with weighted averaging indicate maintenance intervals of 5 years for electromechanical or solid state relays, and 7 years for unmonitored microprocessor relays.

A number of utilities have extended maintenance intervals for microprocessor relays beyond 7 years, based on favorable experience with the particular products they have installed. To provide a technical basis for such extension, the SPCTF authors developed a recommendation of 10 years using the Markov modeling approach from [1] as summarized in Section 8.4. The results of this modeling depend on the completeness of self-testing or monitoring. Accordingly, this extended interval is allowed by Table 1 only when such relays are monitored as specified in the attributes of monitoring contained in Tables 1-1 through 1-5 and Table 2. Monitoring is capable of reporting Protection System health issues that are likely to affect performance within the 10 year time interval between verifications.

It is important to note that, according to modeling results, Protection System availability barely changes as the maintenance interval is varied below the 10-year mark. Thus, reducing the maintenance interval does not improve Protection System availability. With the assumptions of the model regarding how maintenance is carried out, reducing the maintenance interval actually degrades Protection System availability.

8.4 Basis for Extended Maintenance Intervals for Microprocessor Relays

Table 1 allows maximum verification intervals that are extended based on monitoring level. The industry has experience with self-monitoring microprocessor relays that leads to the Table 1 value for a monitored relay as explained in Section 8.3. To develop a basis for the maximum interval for monitored relays in their *Protection System Maintenance – A Technical Reference*, the SPCTF used the methodology of Reference [1], which specifically addresses optimum routine maintenance intervals. The Markov modeling approach of [1] is judged to be valid for the design and typical failure modes of microprocessor relays.

The SPCTF authors ran test cases of the Markov model to calculate two key probability measures:

- Relay Unavailability - the probability that the relay is out of service due to failure or maintenance activity while the power system element to be protected is in service.
- Abnormal Unavailability - the probability that the relay is out of service due to failure or maintenance activity when a fault occurs, leading to failure to operate for the fault.

The parameter in the Markov model that defines self-monitoring capability is ST (for self test). ST = 0 if there is no self-monitoring; ST = 1 for full monitoring. Practical ST values are estimated to range from .75 to .95. The SPCTF simulation runs used constants in the Markov model that were the same as those used in [1] with the following exceptions:

Sn, Normal tripping operations per hour = 21600 (reciprocal of normal fault clearing time of 10 cycles)

Sb, Backup tripping operations per hour = 4320 (reciprocal of backup fault clearing time of 50 cycles)

Rc, Protected component repairs per hour = 0.125 (8 hours to restore the power system)

Rt, Relay routine tests per hour = 0.125 (8 hours to test a Protection System)

Rr, Relay repairs per hour = 0.08333 (12 hours to complete a Protection System repair after failure)

Experimental runs of the model showed low sensitivity of optimum maintenance interval to these parameter adjustments.

The resulting curves for Relay Unavailability and Abnormal Unavailability versus maintenance interval showed a broad minimum (optimum maintenance interval) in the vicinity of 10 years – the curve is flat, with no significant change in either unavailability value over the range of 9, 10, or 11 years. This was true even for a relay Mean Time between Failures (MTBF) of 50 years, much lower than MTBF values typically published for these relays. Also, the Markov modeling

indicates that both the relay unavailability and abnormal unavailability actually become higher with more frequent testing. This shows that the time spent on these more frequent tests yields no failure discoveries that approach the negative impact of removing the relays from service and running the tests.
The PSMT SDT discussed the practical need for "time-interval extensions" or "grace periods" to allow for scheduling problems that resulted from any number of business contingencies. The time interval discussions also focused on the need to reflect industry norms surrounding Generator outage frequencies. Finally it was again noted that FERC Order 693 demanded maximum time intervals. "Maximum time intervals" by their very term negates any "time-interval extension" or "grace periods". To recognize the need to follow industry norms on Generator outage frequencies and accommodate a form of time-interval extension while still following FERC Order 693 the Standard Drafting Team arrived at a 6 year interval for the electromechanical relay instead of the 5 year interval arrived at by the SPCTF. The PSMT SDT has followed the FERC directive for a *maximum* time interval and has determined that no extensions will be allowed. Six years has been set for the maximum time interval between manual maintenance activities. This maximum time interval also works well for maintenance cycles that have been in use in generator plants for decades.

For monitored relays, the PSMT SDT notes that the SPCTF called for 10 years as the interval between maintenance activities. This 10 year interval was chosen even though there was "…no significant change in unavailability value over the range of 9, 10, or 11 years. This was true even for a relay Mean Time between Failures (MTBF) of 50 years…" The Standard Drafting Team again sought to align maintenance activities with known successful practices and outage schedules. The Standard does not allow extensions on any component of the Protection System; thus the maximum allowed interval for these components has been set to12 years. Twelve years also fits well into the traditional maintenance cycles of both substations and generator plants.

Also of note is the Table's use of the term "Calendar" in the column for "Maximum Maintenance Interval". The PSMT SDT deemed it necessary to include the term "Calendar" to facilitate annual maintenance planning, scheduling and implementation. This need is the result of known occurrences of system requirements that could cause maintenance schedules to be missed by a few days or weeks. The PSMT SDT chose the term "Calendar" to preclude the need to have schedules be met to the day. An electromechanical protective relay that is maintained in year #1 need not be revisited until 6 years later (year #7). For example: a relay was maintained April 10, 2008; maintenance would need to be completed no later than December 31, 2014.

Though not a requirement of this Standard, to stay in line with many Compliance Enforcement Agencies audit processes an entity should define, within their own PSMP, the entity's use of terms like annual, calendar year, etc. Then, once this is within the PSMP the entity should abide by their chosen language.

9. Performance-Based Maintenance Process

In lieu of using the Table 1 intervals, a Performance-Based Maintenance process may be used to establish maintenance intervals (*PRC-005 Attachment A Criteria for a Performance-Based Protection System Maintenance Program*). A Performance-Based Maintenance process may justify longer maintenance intervals, or require shorter intervals relative to Table 1. In order to use a Performance-Based Maintenance process, the documented maintenance program must include records of repairs, adjustments, and corrections to covered Protection Systems in order to provide historical justification for intervals other than those established in Table 1. Furthermore, the asset owner must regularly analyze these records of corrective actions to develop a ranking of causes. Recurrent problems are to be highlighted, and remedial action plans are to be documented to mitigate or eliminate recurrent problems.

Entities with Performance-Based Maintenance track performance of Protection Systems, demonstrate how they analyze findings of performance failures and aberrations, and implement continuous improvement actions. Since no maintenance program can ever guarantee that no malfunction can possibly occur, documentation of a Performance-Based Maintenance program would serve the utility well in explaining to regulators and the public a Misoperation leading to a major system outage event.

A Performance-Based Maintenance program requires auditing processes like those included in widely used industrial quality systems (such as ***ISO 9001-2000, Quality management systems — Requirements;*** or applicable parts of the NIST Baldridge National Quality Program). The audits periodically evaluate:

- The completeness of the documented maintenance process
- Organizational knowledge of and adherence to the process
- Performance metrics and documentation of results
- Remediation of issues
- Demonstration of continuous improvement.

In order to opt into a Performance-Based Maintenance (PBM) program the asset owner must first sort the various Protection System components into population segments. Any population segment must be comprised of at least 60 individual units; if any asset owner opts for PBM but does not own 60 units to comprise a population then that asset owner may combine data from other asset owners until the needed 60 units is aggregated. Each population segment must be composed of a grouping of Protection Systems or components of a consistent design standard or particular model or type from a single manufacturer and subjected to similar environmental factors. For example: One segment cannot be comprised of both GE & Westinghouse electro-mechanical lock-out relays; likewise, one segment cannot be comprised of 60 GE lock-out relays, 30 of which are in a dirty environment and the remaining 30 from a clean environment. This PBM process cannot be applied to batteries but can be applied to all other components of a Protection System including (but not limited to) specific battery chargers, instrument transformers, trip coils and/or control circuitry (etc.).

9.1 Minimum Sample Size

Large Sample Size

An assumption that needs to be made when choosing a sample size is "the sampling distribution of the sample mean can be approximated by a normal probability distribution." The Central Limit Theorem states: "In selecting simple random samples of size *n* from a population, the sampling distribution of the sample mean *x* can be approximated by a normal probability distribution as the sample size becomes large." (Essentials of Statistics for Business and Economics, Anderson, Sweeney, Williams, 2003)

To use the Central Limit Theorem in statistics, the population size should be large. The references below are supplied to help define what is large.

> "… whenever we are using a large simple random sample (rule of thumb: n>=30), the central limit theorem enables us to conclude that the sampling distribution of the sample mean can be approximated by a normal distribution." (Essentials of Statistics for Business and Economics, Anderson, Sweeney, Williams, 2003)
>
> "If samples of size n, when n>=30, are drawn from any population with a mean *u* and a standard deviation σ, the sampling distribution of sample means approximates a normal distribution. The greater the sample size, the better the approximation." (Elementary Statistics - Picturing the World, Larson, Farber, 2003)
>
> "The sample size is large (generally n>=30)… (Introduction to Statistics and Data Analysis - Second Edition, Peck, Olson, Devore, 2005)
>
> "… the normal is often used as an approximation to the *t* distribution in a test of a null hypothesis about the mean of a normally distributed population when the population variance is estimated from a relatively large sample. A sample size exceeding 30 is often given as a minimal size in this connection." (Statistical Analysis for Business Decisions, Peters, Summers, 1968)

Error of Distribution Formula

Beyond the large sample size discussion above, a sample size requirement can be estimated using the bound on the Error of Distribution Formula when the expected result is of a "Pass/Fail" format and will be between 0 and 1.0.

The Error of Distribution Formula is:

$$B = z\sqrt{\frac{\pi(1-\pi)}{n}}$$

Where:

B = bound on the error of distribution (allowable error)

z = standard error

π = expected failure rate

n = sample size required

Solving for n provides:

$$n = \pi(1-\pi)\left(\frac{z}{B}\right)^2$$

Minimum Population Size to use Performance-Based Program
One entity's population of components should be large enough to represent a sizeable sample of a vendor's overall population of manufactured devices. For this reason the following assumptions are made:

B = 5%
z = 1.96 (This equates to a 95% confidence level)
π = 4%

Using the equation above, n=59.0.

Minimum Sample Size to evaluate Performance-Based Program
The number of components that should be included in a sample size for evaluation of the appropriate testing interval can be smaller because a lower confidence level is acceptable since the sample testing is repeated or updated annually. For this reason, the following assumptions are made:

B = 5%
z = 1.44 (85% confidence level)
π = 4%

Using the equation above, n=31.8.

Recommendation
Based on the above discussion, a sample size should be at least 30 to allow use of the equation mentioned. Using this and the results of the equation, the following numbers are recommended (and required within the Standard):

Minimum Population Size to use Performance-Based Maintenance Program = 60

Minimum Sample Size to evaluate Performance-Based Program = 30.

Once the population segment is defined then maintenance must begin within the intervals as outlined for the device described in the Tables 1-1 through 1-5. Time intervals can be lengthened provided the last year's worth of components tested (or the last 30 units maintained, whichever is more) had fewer than 4% countable events. It is notable that 4% is specifically chosen because an entity with a small population (60 units) would have to adjust its time intervals between maintenance if more than 1 countable event was found to have occurred during the last analysis period. A smaller percentage would require that entity to adjust the time interval between maintenance activities if even one unit is found out of tolerance or causes a Misoperation.

The minimum number of units that can be tested in any given year is 5% of the population. Note that this 5% threshold sets a practical limitation on total length of time between intervals at 20 years.

If at any time the number of countable events equals or exceeds 4% of the last year's tested components (or the last 30 units maintained, whichever is more) then the time period between manual maintenance activities must be decreased. There is a time limit on reaching the decreased time at which the countable events is less than 4%; this must be attained within three years.

This additional time period of three years to restore segment performance to <4% countable events is mandated to keep entities from "gaming the PBM system". It is believed that this requirement provides the economic disincentives to discourage asset owners from arbitrarily pushing the PBM time intervals out to up to 20 years without proper statistical data.

9.2 Frequently Asked Questions:

I'm a small entity and cannot aggregate a population of Protection System components to establish a segment required for a Performance-Based Protection System Maintenance Program. How can I utilize that opportunity?
Multiple asset owning entities may aggregate their individually owned populations of individual Protection System components to create a segment that crosses ownership boundaries. All entities participating in a joint program should have a single documented joint management process, with consistent Protection System Maintenance Programs (practices, maintenance intervals and criteria), for which the multiple owners are individually responsible with respect to the requirements of the Standard. The requirements established for Performance-Based Maintenance must be met for the overall aggregated program on an ongoing basis.

The aggregated population should reflect all factors that affect consistent performance across the population, including any relevant environmental factors such as geography, power-plant vs. substation, and weather conditions.

Can an owner go straight to a Performance-Based Maintenance program schedule, if they have previously gathered records?
Yes. An owner can go to a Performance-Based Maintenance program immediately. The owner will need to comply with the requirements of a Performance-Based Maintenance program as listed in the Standard. Gaps in the data collected will not be allowed; therefore, if an owner finds that a gap exists such that they cannot prove that they have collected the data as required for a Performance-Based Maintenance program then they will need to wait until they can prove compliance.

When establishing a Performance-Based Maintenance program, can I use test data from the device manufacturer, or industry survey results, as results to help establish a basis for my Performance-Based intervals?
No. You must use actual in-service test data for the components in the segment.

What types of misoperations or events are not considered countable events in the Performance-Based Protection System Maintenance (PBM) Program?

Countable events are intended to address conditions that are attributed to hardware failure or calibration failure; that is, conditions that reflect deteriorating performance of the component. These conditions include any condition where the device previously worked properly, then, due to changes within the device, malfunctioned or degraded to the point that re-calibration (to within the entity's tolerance) was required.

For this purpose of tracking hardware issues, human errors resulting in Protection System misoperations during system installation or maintenance activities are not considered countable events. Examples of excluded human errors include relay setting errors, design errors, wiring errors, inadvertent tripping of devices during testing or installation, and misapplication of Protection System components. Examples of misapplication of Protection System components include wrong CT or PT tap position, protective relay function misapplication, and components not specified correctly for their installation. Obviously, if one is setting up relevant data about hardware failures then human failures should be eliminated from the hardware performance analysis.

One example of human-error is not pertinent data might be in the area of testing "86" lock-out relays (LOR). "Entity A" has two types of LOR's type "X" and type "Y"; they want to move into a performance based maintenance interval. They have 1000 of each type, so the population variables are met. During electrical trip testing of all of their various schemes over the initial six-year interval they find zero type "X" failures, but human error led to tripping a BES element 100 times; they find 100 type "Y" failures and had an additional 100 human-error caused tripping incidents. In this example the human-error caused misoperations should not be used to judge the performance of either type of LOR. Analysis of the data might lead "Entity A" to change time intervals. Type "X" LOR can be placed into extended time interval testing because of its low failure rate (zero failures) while Type "Y" would have to be tested more often than every 6 calendar years (100 failures divided by 1000 units exceeds the 4% tolerance level).

Certain types of Protection System component errors that cause misoperations are not considered countable events. Examples of excluded component errors include device malfunctions that are correctable by firmware upgrades and design errors that do not impact protection function.

What are some examples of methods of correcting segment perfomance for Performance-Based Maintenance?

There are a number of methods that may be useful for correcting segment performance for mal-performing segments in a Performance-Based Maintenance system. Some examples are listed below.

- The maximum allowable interval, as established by the Performance-Based Maintenance system, can be decreased. This may, however, be slow to correct the performance of the segment.
- Identifiable sub-groups of components within the established segment, which have been identified to be the mal-performing portion of the segment, can be broken out as an independent segment for target action. Each resulting segment must satisfy the minimum population requirements for a Performance-Based Maintenance program in order to remain within the program.

- Targeted corrective actions can be taken to correct frequently occurring problems. An example would be replacement of capacitors within electromechanical distance relays if bad capacitors were determined to be the cause of the mal-performance.
- Components within the mal-performing segment can be replaced with other components (electromechanical distance relays with microprocessor relays, for example) to remove the mal-performing segment.

If I find (and correct) a maintenance-correctable issue as a result of a misoperation investigation (Re: PRC-004), how does this affect my Performance-Based Maintenance program?

If you perform maintenance on a Protection System component for any reason (including as part of a PRC-004 required misoperation investigation/corrective action), the actions performed can count as a maintenance activity, and, if you desire, "reset the clock" on everything you've done. In a Performance-Based Maintenance program, you also need to record the maintenance-correctable issue with the relevant component group and use it in the analysis to determine your correct Performance-Based Maintenance interval for that component group. Note that "resetting the clock" should not be construed as interfering with an entity's routine testing schedule because the "clock-reset" would actually make for a decreased time interval by the time the next routine test schedule comes around.

For example a relay scheme, consisting of 4 relays, is tested on 1-1-11 and the PSMP has a time interval of 3 calendar years with an allowable extension of 1 calendar year. The relay would be due again for routine testing before the end of the year 2015. This mythical relay scheme has a misoperation on 6-1-12 that points to one of the four relays as bad. Investigation proves a bad relay and a new one is tested and installed in place of the original. This replacement relay actually could be retested before the end of the year 2016 (clock-reset) and not be out of compliance. This requires tracking maintenance by individual relays and is allowed. However, many companies schedule maintenance in other ways like by substation or by circuit breaker or by relay scheme. By these methods of tracking maintenance that "replaced relay" will be retested before the end of the year 2015. This is also acceptable. In no case was a particular relay tested beyond the PSMP of 4 years max, nor was the 6 year max of the Standard exceeded. The entity can reset the clock if they desire or the entity can continue with original schedules and, in effect, test even more frequently.

Why are batteries excluded from PBM? What about exclusion of batteries from condition based maintenance?

Batteries are the only element of a Protection System that is a perishable item with a shelf life. As a perishable item batteries require not only a constant float charge to maintain their freshness (charge), but periodic inspection to determine if there are problems associated with their aging process and testing to see if they are maintaining a charge or can still deliver their rated output as required.

Besides being perishable, a second unique feature of a battery that is unlike any other Protection System element is that a battery uses chemicals, metal alloys, plastics, welds, and bonds that must interact with each other to produce the constant dc source required for Protection Systems, undisturbed by ac system disturbances.

No type of battery manufactured today for Protection System application is free from problems that can only be detected over time by inspection and test. These problems can arise from variances in the manufacturing process, chemicals and alloys used in the construction of the individual cells, quality of welds and bonds to connect the components, the plastics used to make batteries and the cell forming process for the individual battery cells.

Other problems that require periodic inspection and testing can result from transportation from the factory to the job site, length of time before a charge is put on the battery, the method of installation, the voltage level and duration of equalize charges, the float voltage level used, and the environment that the battery is installed in.

All of the above mentioned factors and several more not discussed here are beyond the control of the Functional Entities that want to use a Performance-Based Protection System Maintenance (PBM) program. These inherent variances in the aging process of a battery cell make establishment of a designated segment based on manufacturer and type of battery impossible.

The whole point of PBM is that if all variables are isolated then common aging and performance criteria would be the same. However, there are too many variables in the electrochemical process to completely isolate all of the performance-changing criteria.

Similarly, Functional Entities that want to establish a condition-based maintenance program using the highest levels of monitoring, resulting in the least amount of hands-on maintenance activity, cannot completely eliminate some periodic maintenance of the battery used in a station dc supply. Inspection of the battery is required on a Maximum Maintenance Interval listed in the tables due to the aging processes of station batteries. However, higher degrees of monitoring of a battery can eliminate the requirement for some periodic testing and some inspections (see Table 1-4).

Please provide an example of the calculations involved in extending maintenance time intervals using PBM.

Entity has 1000 GE-HEA lock-out relays; this is greater than the minimum sample requirement of 60.

They start out testing all of the relays within the prescribed Table requirements (6 year max) by testing the relays every 5 years. The entity's plan is to test 200 units per year; this is greater than the minimum sample size requirement of 30.

For the sake of example only the following will show 6 failures per year, reality may well have different numbers of failures every year. PBM requires annual assessment of failures found per units tested.

After the first year of tests the entity finds 6 failures in the 200 units tested. 6/200= 3% failure rate.

This entity is now allowed to extend the maintenance interval if they choose.

The entity chooses to extend the maintenance interval of this population segment out to 10 years.

This represents a rate of 100 units tested per year; entity selects 100 units to be tested in the following year.

After that year of testing these 100 units the entity again finds 6 failed units. 6/100= 6% failures.

This entity has now exceeded the acceptable failure rate for these devices and must accelerate testing of all of the units at a higher rate such that the failure rate is found to be less than 4% per year; the entity has three years to get this failure rate down to 4% or less (per year).

In response to the 6% failure rate, the entity decreases the testing interval to 8 years. This means that they will now test 125 units per year (1000/8). The entity has just two years left to get the test rate corrected.

After a year they again find 6 failures out of the 125 units tested. 6/125= 5% failures.

In response to the 5% failure rate, the entity decreases the testing interval to 7 years. This means that they will now test 143 units per year (1000/7). The entity has just one year left to get the test rate corrected.

After a year they again find 6 failures out of the 143 units tested. 6/143= 4.2% failures.

(Note that the entity has tried 5 years and they were under the 4% limit and they tried 7 years and they were over the 4% limit. They must be back at 4% failures or less in the next year so they might simply elect to go back to 5 years.)

Instead, in response to the 5% failure rate, the entity decreases the testing interval to 6 years. This means that they will now test 167 units per year (1000/6).

After a year they again find 6 failures out of the 167 units tested. 6/167= 3.6% failures.

Entity found that they could maintain the failure rate at no more than 4% failures by maintaining the testing interval at 6 years or less. Entity chose 6 year interval and effectively extended their TBM (5 years) program by 20%.

A note of practicality is that an entity will probably be in better shape to lengthen the intervals between tests if the failure rate is less than 2%. But the requirements allow for annual adjustments if the entity desires. As a matter of maintenance management, an ever-changing test rate (units tested / year) may be un-workable.

Note that the “5% of components” requirement effectively sets a practical limit of 20 year maximum PBM interval. Also of note is the “3 years” requirement; this is there to prevent an entity from “gaming the system”. An entity might arbitrarily extend time intervals from 6 years to 20 years. In the event that an entity finds a failure rate greater than 4% then the test rate must be accelerated such that within three years the failure rate must be brought back down to 4% or less.

Here is a table that demonstrates the values discussed:

Year #	Total Population (P)	Test Interval (I)	Units to be Tested (U= P/I)	# of Failures Found (F)	Failure Rate (=F/U)	Decision to Change Interval Yes or No	Interval Chosen
1	1000	5 yrs	200	6	3%	Yes	10 yrs
2	1000	10 yrs	100	6	6%	Yes	8 yrs
3	1000	8 yrs	125	6	5%	Yes	7 yrs
4	1000	7 yrs	143	6	4.2%	Yes	6 yrs
5	1000	6 yrs	167	6	3.6%	No	6 yrs

Please provide an example of the calculations involved in extending maintenance time intervals using PBM for control circuitry.

Note that the following example captures "Control Circuitry" as all of the trip paths associated with a particular trip coil of a circuit breaker. An entity is not restricted to this method of counting control circuits. Perhaps another method an entity would prefer would be to simply track every individual (parallel) trip path. Or perhaps another method would be to track all of the trip outputs from a specific (set) of relays protecting a specific element. Under the included definition of "Component":

The designation of what constitutes a control circuit component is very dependent upon how an entity performs and tracks the testing of the control circuitry. Some entities test their control circuits on a breaker basis whereas others test their circuitry on a local zone of protection basis. Thus, entities are allowed the latitude to designate their own definitions of control circuit components. Another example of where the entity has some discretion on determining what constitutes a single component is the voltage and current sensing devices, where the entity may choose either to designate a full three-phase set of such devices or a single device as a single component.

And in Attachment A (PBM) the definition of Segment:

Segment – *Protection Systems or components of a consistent design standard, or a particular model or type from a single manufacturer that typically share other common elements. Consistent performance is expected across the entire population of a segment. A segment must contain at least sixty (60) individual components.*

Example:
Entity has 1000 circuit breakers, all of which have two trip coils for a total of 2000 trip coils; if all circuitry was designed and built with a consistent (internal entity) standard then this is greater than the minimum sample requirement of 60.
For the sake of further example the following facts are given:
Half of all relay panels (500) were built 40 years ago by an outside contractor, consisted of asbestos wrapped 600V-insulation panel wiring and the cables exiting the control house are THHN pulled in conduit direct to exactly half of all of the various circuit breakers. All of the relay panels and cable pulls were built with consistent standards and consistent performance standard expectations within the segment (which is greater than 60). Each relay panel has redundant microprocessor (MPC) relays (retrofitted); each MPC relay supplies an individual trip output to each of the two trip coils of the assigned circuit breaker.

Approximately 35 years ago the entity developed their own internal construction crew and now builds all of their own relay panels from parts supplied from vendors that meet the entity's specifications, including SIS 600V insulation wiring and copper-sheathed cabling within the direct conduits to circuit breakers. The construction crew uses consistent standards in the construction. This newer segment of their Control Circuitry population is different than the original segment, consistent (standards, construction and performance expectations) within the new segment and constitutes the remainder of the entity's population, (another 500 panels and the cabling to the remaining 500 circuit breakers). Each relay panel has redundant

microprocessor (MPC) relays; each MPC relay supplies an individual trip output to each of the two trip coils of the assigned circuit breaker. Every trip path in this newer segment has a device that monitors the voltage directly across the trip contacts of the MPC relays and alarms via RTU and SCADA to the Operations Control room. This monitoring device, when not in alarm, demonstrates continuity all the way through the trip coil, cabling and wiring back to the trip contacts of the MPC relay.

The entity is tracking 2000 trip coils (each consisting of multiple trip paths) in each of these two segments. But half of all of the trip paths are monitored, therefore the trip paths are continuously tested and the circuit will alarm when there is a failure; these alarms have to be verified every 12 years for correct operation.

The entity now has 1000 trip coils (and associated trip paths) remaining that they have elected to count as control circuits. The entity has instituted a process that requires the verification of every trip path to each trip coil (one unit), including the electrical activation of the trip coil. (The entity notes that the trip coils will have to be tripped electrically more often than the trip path verification and is taking care of this activity through other documentation of real-time fault operations.)

They start out testing all of the trip coil circuits within the prescribed Table requirements (12 year max) by testing the trip circuits every 10 years. The entity's plan is to test 100 units per year; this is greater than the minimum sample size requirement of 30.

For the sake of example only the following will show 3 failures per year, reality may well have different numbers of failures every year. PBM requires annual assessment of failures found per units tested.

After the first year of tests the entity finds 3 failures in the 100 units tested. 3/100= 3% failure rate.

This entity is now allowed to extend the maintenance interval if they choose.

The entity chooses to extend the maintenance interval of this population segment out to 20 years.

This represents a rate of 50 units tested per year; entity selects 50 units to be tested in the following year.

After that year of testing these 50 units the entity again finds 3 failed units. 3/50= 6% failures.

This entity has now exceeded the acceptable failure rate for these devices and must accelerate testing of all of the units at a higher rate such that the failure rate is found to be less than 4% per year; the entity has three years to get this failure rate down to 4% or less (per year).

In response to the 6% failure rate, the entity decreases the testing interval to 16 years. This means that they will now test 63 units per year (1000/16). The entity has just two years left to get the test rate corrected.

After a year they again find 3 failures out of the 63 units tested. 3/63= 4.76% failures.

In response to the >4% failure rate, the entity decreases the testing interval to 14 years. This means that they will now test 72 units per year (1000/14). The entity has just one year left to get the test rate corrected.

After a year they again find 3 failures out of the 72 units tested. 3/72= 4.2% failures.

(Note that the entity has tried 10 years and they were under the 4% limit and they tried 14 years and they were over the 4% limit. They must be back at 4% failures or less in the next year so they might simply elect to go back to 10 years.)

Instead, in response to the 4.2% failure rate, the entity decreases the testing interval to 12 years. This means that they will now test 84 units per year (1000/12).

After a year they again find 3 failures out of the 84 units tested. 3/84= 3.6% failures.

Entity found that they could maintain the failure rate at no more than 4% failures by maintaining the testing interval at 12 years or less. Entity chose 12 year interval and effectively extended their TBM (10 years) program by 20%.

A note of practicality is that an entity will probably be in better shape to lengthen the intervals between tests if the failure rate is less than 2%. But the requirements allow for annual adjustments if the entity desires. As a matter of maintenance management, an ever-changing test rate (units tested / year) may be un-workable.

Note that the “5% of components” requirement effectively sets a practical limit of 20 year maximum PBM interval. Also of note is the “3 years” requirement; this is there to prevent an entity from “gaming the system”. An entity might arbitrarily extend time intervals from 6 years to 20 years. In the event that an entity finds a failure rate greater than 4% then the test rate must be accelerated such that within three years the failure rate must be brought back down to 4% or less.

Here is a table that demonstrates the values discussed:

Year #	Total Population (P)	Test Interval (I)	Units to be Tested (U= P/I)	# of Failures Found (F)	Failure Rate (=F/U)	Decision to Change Interval Yes or No	Interval Chosen
1	1000	10 yrs	100	3	3%	Yes	20 yrs
2	1000	20 yrs	50	3	6%	Yes	16yrs
3	1000	16 yrs	63	3	4.8%	Yes	14 yrs
4	1000	14 yrs	72	3	4.2%	Yes	12 yrs
5	1000	12 yrs	84	3	3.6%	No	12 yrs

Please provide an example of the calculations involved in extending maintenance time intervals using PBM for voltage and current sensing devices.

Note that the following example captures "voltage and current inputs to the protective relays" as all of the various current transformer and potential transformer signals associated with a particular set of relays used for protection of a specific element. This entity calls this set of protective relays a "Relay Scheme". Thus this entity chooses to count PT and CT signals as a group instead of individually tracking maintenance activities to specific bushing CT's or specific PT's. An entity is not restricted to this method of counting voltage and current devices, signals and paths. Perhaps another method an entity would prefer would be to simply track every individual PT and CT. Note that a generation maintenance group may well select the latter because they may elect to perform routine off-line tests during generator outages whereas a transmission maintenance group might create a process that utilizes real-time system values measured at the relays. Under the included definition of "Component":

The designation of what constitutes a control circuit component is very dependent upon how an entity performs and tracks the testing of the control circuitry. Some entities test their control circuits on a breaker basis whereas others test their circuitry on a local zone of protection basis. Thus, entities are allowed the latitude to designate their own definitions of control circuit components. Another example of where the entity has some discretion on determining what constitutes a single component is the voltage and current sensing devices, where the entity may choose either to designate a full three-phase set of such devices or a single device as a single component.

And in Attachment A (PBM) the definition of Segment:

Segment – *Protection Systems or components of a consistent design standard, or a particular model or type from a single manufacturer that typically share other common elements. Consistent performance is expected across the entire population of a segment. A segment must contain at least sixty (60) individual components.*

Example:

Entity has 2000 "Relay Schemes", all of which have three current signals supplied from bushing CT's and three voltage signals supplied from substation bus PT's. All cabling and circuitry was designed and built with a consistent (internal entity) standard and this population is greater than the minimum sample requirement of 60.

For the sake of further example the following facts are given:

Half of all relay schemes (1000) are supplied with current signals from ANSI STD C800 bushing CT's and voltage signals from PT's built by ACME Electric MFR CO. All of the relay panels and cable pulls were built with consistent standards and consistent performance standard expectations exist for the consistent wiring, cabling and instrument transformers within the segment (which is greater than 60).

The other half of the entity's relay schemes have MPC relays with additional monitoring built-in that compare DNP values of voltages and currents (or Watts and VARs) as interpreted by the MPC relays and alarm for an entity-accepted tolerance level of accuracy. This newer segment of their "Voltage and Current Sensing" population is different than the original segment, consistent

(standards, construction and performance expectations) within the new segment and constitutes the remainder of the entity's population.

The entity is tracking many thousands of voltage and current signals within 2000 relay schemes (each consisting of multiple voltage and current signals) in each of these two segments. But half of all of the relay schemes voltage and current signals are monitored, therefore the voltage and current signals are continuously tested and the circuit will alarm when there is a failure; these alarms have to be verified every 12 years for correct operation.
The entity now has 1000 relay schemes worth of voltage and current signals remaining that they have elected to count within their relay schemes designation. The entity has instituted a process that requires the verification of these voltage and current signals within each relay scheme (one unit).
(Please note - a problem discovered with a current or voltage signal found at the relay could be caused by anything from the relay all the way to the signal source itself. Having many sources of problems can easily increase failure rates beyond the rate of failures of just one item (for example just PT's). It is the intent of the SDT to minimize failure rates of all of the equipment to an acceptable level thus any failure of any item that gets the signal from source to relay is counted. It is for this reason that the SDT chose to set the boundary at the ability of the signal to be delivered all the way to the relay.)

The entity will start out measuring all of the relay scheme voltage and currents at the individual relays within the prescribed Table requirements (12 year max) by measuring the voltage and current values every 10 years. The entity's plan is to test 100 units per year; this is greater than the minimum sample size requirement of 30.

For the sake of example only the following will show 3 failures per year, reality may well have different numbers of failures every year. PBM requires annual assessment of failures found per units tested.

After the first year of tests the entity finds 3 failures in the 100 units tested. 3/100= 3% failure rate.

This entity is now allowed to extend the maintenance interval if they choose.

The entity chooses to extend the maintenance interval of this population segment out to 20 years.

This represents a rate of 50 units tested per year; entity selects 50 units to be tested in the following year.

After that year of testing these 50 units the entity again finds 3 failed units. 3/50= 6% failures.

This entity has now exceeded the acceptable failure rate for these devices and must accelerate testing of all of the units at a higher rate such that the failure rate is found to be less than 4% per year; the entity has three years to get this failure rate down to 4% or less (per year).

In response to the 6% failure rate, the entity decreases the testing interval to 16 years. This means that they will now test 63 units per year (1000/16). The entity has just two years left to get the test rate corrected.

After a year they again find 3 failures out of the 63 units tested. 3/63= 4.76% failures.

In response to the >4% failure rate, the entity decreases the testing interval to 14 years. This means that they will now test 72 units per year (1000/14). The entity has just one year left to get the test rate corrected.

After a year they again find 3 failures out of the 72 units tested. 3/72= 4.2% failures.

(Note that the entity has tried 10 years and they were under the 4% limit and they tried 14 years and they were over the 4% limit. They must be back at 4% failures or less in the next year so they might simply elect to go back to 10 years.)

Instead, in response to the 4.2% failure rate, the entity decreases the testing interval to 12 years. This means that they will now test 84 units per year (1000/12).

After a year they again find 3 failures out of the 84 units tested. 3/84= 3.6% failures.

Entity found that they could maintain the failure rate at no more than 4% failures by maintaining the testing interval at 12 years or less. Entity chose 12 year interval and effectively extended their TBM (10 years) program by 20%.

A note of practicality is that an entity will probably be in better shape to lengthen the intervals between tests if the failure rate is less than 2%. But the requirements allow for annual adjustments if the entity desires. As a matter of maintenance management, an ever-changing test rate (units tested / year) may be un-workable.

Note that the “5% of components” requirement effectively sets a practical limit of 20 year maximum PBM interval. Also of note is the “3 years” requirement; this is there to prevent an entity from “gaming the system”. An entity might arbitrarily extend time intervals from 6 years to 20 years. In the event that an entity finds a failure rate greater than 4% then the test rate must be accelerated such that within three years the failure rate must be brought back down to 4% or less.

Here is a table that demonstrates the values discussed:

Year #	Total Population (P)	Test Interval (I)	Units to be Tested (U= P/I)	# of Failures Found (F)	Failure Rate (=F/U)	Decision to Change Interval Yes or No	Interval Chosen
1	1000	10 yrs	100	3	3%	Yes	20 yrs
2	1000	20 yrs	50	3	6%	Yes	16yrs
3	1000	16 yrs	63	3	4.8%	Yes	14 yrs
4	1000	14 yrs	72	3	4.2%	Yes	12 yrs
5	1000	12 yrs	84	3	3.6%	No	12 yrs

10. Overlapping the Verification of Sections of the Protection System

Tables 1-1 through 1-5 require that every Protection System component be periodically verified. One approach, but not the only method, is to test the entire protection scheme as a unit, from the secondary windings of voltage and current sources to breaker tripping. For practical ongoing verification, sections of the Protection System may be tested or monitored individually. The boundaries of the verified sections must overlap to ensure that there are no gaps in the verification. See Appendix A of this Supplementary Reference for additional discussion on this topic.

All of the methodologies expressed within this report may be combined by an entity, as appropriate, to establish and operate a maintenance program. For example, a Protection System may be divided into multiple overlapping sections with a different maintenance methodology for each section:

- Time-based maintenance with appropriate maximum verification intervals for categories of equipment as given in the Tables 1-1 through 1-5;
- Monitoring as described in Tables 1-1 through 1-5;
- A Performance-Based Maintenance program as described in Section 9 above or Attachment A of the Standard;
- Opportunistic verification using analysis of fault records as described in Section 11

10.1 Frequently Asked Question:

My system has alarms that are gathered once daily through an auto-polling system; this is not really a conventional SCADA system but does it meet the Table 1 requirements for inclusion as a monitored system?
Yes, provided the auto-polling that gathers the alarms reports those alarms to a location where the action can be initiated to correct the maintenance-correctable issue. This location does not have to be the location of the engineer or the technician that will eventually repair the problem, but rather a location where the action can be initiated.

11. Monitoring by Analysis of Fault Records

Many users of microprocessor relays retrieve fault event records and oscillographic records by data communications after a fault. They analyze the data closely if there has been an apparent misoperation, as NERC Standards require. Some advanced users have commissioned automatic fault record processing systems that gather and archive the data. They search for evidence of component failures or setting problems hidden behind an operation whose overall outcome seems to be correct. The relay data may be augmented with independently captured digital fault recorder (DFR) data retrieved for the same event.

Fault data analysis comprises a legitimate CBM program that is capable of reducing the need for a manual time-interval based check on Protection Systems whose operations are analyzed. Even electromechanical Protection Systems instrumented with DFR channels may achieve some CBM benefit. The completeness of the verification then depends on the number and variety of faults in the vicinity of the relay that produce relay response records, and the specific data captured.

A typical fault record will verify particular parts of certain Protection Systems in the vicinity of the fault. For a given Protection System installation, it may or may not be possible to gather within a reasonable amount of time an ensemble of internal and external fault records that completely verify the Protection System.

For example, fault records may verify that the particular relays that tripped are able to trip via the control circuit path that was specifically used to clear that fault. A relay or DFR record may

indicate correct operation of the protection communications channel. Furthermore, other nearby Protection Systems may verify that they restrain from tripping for a fault just outside their respective zones of protection. The ensemble of internal fault and nearby external fault event data can verify major portions of the Protection System, and reset the time clock for the Table 1 testing intervals for the verified components only.

What can be shown from the records of one operation is very specific and limited. In a panel with multiple relays, only the specific relay(s) whose operation can be observed without ambiguity should be used. Be careful about using fault response data to verify that settings or calibration are correct. Unless records have been captured for multiple faults close to either side of a setting boundary, setting or calibration could still be incorrect.
PMU data, much like DME data, can be utilized to prove various components of the Protection System. Obviously, care must be taken to attribute proof only to the parts of a Protection System that can actually be proven using the PMU or DME data.

If fault record data is used to show that portions or all of a Protection System have been verified to meet Table 1 requirements, the owner must retain the fault records used, and the maintenance related conclusions drawn from this data and used to defer Table 1 tests, for at least the retention time interval given in Section 8.2.

11.1 Frequently Asked Question:

I use my protective relays for fault and disturbance recording, collecting oscillographic records and event records via communications for fault analysis to meet NERC and DME requirements. What are the maintenance requirements for the relays?
For relays used only as disturbance monitoring equipment, the NERC Standard PRC-018-1 R3 & R6 states the maintenance requirements, and is being addressed by a Standards activity that is revising PRC-002-1 and PRC-018-1. For protective relays “that are designed to provide protection for the BES,” this Standard applies, even if they also perform DME functions.

12. Importance of Relay Settings in Maintenance Programs

In manual testing programs, many utilities depend on pickup value or zone boundary tests to show that the relays have correct settings and calibration. Microprocessor relays, by contrast, provide the means for continuously monitoring measurement accuracy. Furthermore, the relay digitizes inputs from one set of signals to perform all measurement functions in a single self-monitoring microprocessor system. These relays do not require testing or calibration of each setting.

However, incorrect settings may be a bigger risk with microprocessor relays than with older relays. Some microprocessor relays have hundreds or thousands of settings, many of which are critical to Protection System performance.

Monitoring does not check measuring element settings. Analysis of fault records may or may not reveal setting problems. To minimize risk of setting errors after commissioning, the user should enforce strict settings data base management, with reconfirmation (manual or automatic) that the installed settings are correct whenever maintenance activity might have changed them. For background and guidance, see [5] in References.

Table 1 requires that settings must be verified to be as specified. The reason for this requirement is simple. With legacy relays (non-microprocessor protective relays) it is necessary to know the value of the intended setting in order to test, adjust and calibrate the relay. Proving that the relay works per specified setting was the de facto procedure. However, with the advanced microprocessor relays it is possible to change relay settings for the purpose of verifying specific functions and then neglect to return the settings to the specified values. While there is no specific

requirement to maintain a settings management process there remains a need to verify that the settings left in the relay are the intended, specified settings. This need may manifest itself after any of the following:

- One or more settings are changed for any reason.
- A relay fails and is repaired or replaced with another unit.
- A relay is upgraded with a new firmware version.

12.1 Frequently Asked Questions:

How do I approach testing when I have to upgrade firmware of a microprocessor relay?
The entity should ensure that the relay continues to function properly after implementation of firmware changes. Some entities may have a R&D department that might routinely run acceptance tests on devices with firmware upgrades before allowing the upgrade to be installed. Other entities may rely upon the vigorous testing of the firmware OEM. An entity has the latitude to install devices and/or programming that they believe will perform to their satisfaction. If an entity should choose to perform the maintenance activities specified in the Tables following a firmware upgrade then they may, if they choose, reset the time clock on that set of maintenance activities so that they would not have to repeat the maintenance on its regularly scheduled cycle. (However, for simplicity in maintenance schedules, some entities may choose to not reset this time clock; it is merely a suggested option.)

If I upgrade my old relays then do I have to maintain my previous equipment maintenance documentation?
If an equipment item is repaired or replaced then the entity can restart the maintenance-activity-time-interval-clock if desired, however the replacement of equipment does not remove any documentation requirements. The requirements in the Standard are intended to ensure that an entity has a maintenance plan and that the entity adheres to minimum activities and maximum time intervals. The documentation requirements are intended to help an entity demonstrate compliance. For example, saving the dates and records of the last two maintenance activities is intended to demonstrate compliance with the interval. Therefore, if you upgrade or replace equipment then you still must maintain the documentation for the previous equipment, thus demonstrating compliance with the time interval requirement prior to the replacement action.

We have a number of installations where we have changed our Protection System components. Some of the changes were upgrades, but others were simply system rating changes that merely required taking relays "out-of-service". What are our responsibilities when it comes to "out-of-service" devices?
Assuming that your system up-rates, upgrades and overall changes meet any and all other requirements and standards then the requirements of PRC-005-2 are simple – if the Protection System component performs a Protection System function then it must be maintained. If the component no longer performs Protection System functions then it does not require maintenance activities under the Tables of PRC-005-2. While many entities might physically remove a component that is no longer needed there is no requirement in PRC-005-2 to remove such component(s). Obviously, prudence would

dictate that an "out-of-service" device is truly made inactive. There are no record requirements listed in PRC-005-2 for Protection System components not used.

While performing relay testing of a protective device on our Bulk Electric System it was discovered that the protective device being tested was either broken or out of calibration. Does this satisfy the relay testing requirement even though the protective device tested bad, and may be unable to be placed back into service?
Yes, PRC-005-2 requires entities to perform relay testing on protective devices on a given maintenance cycle interval. By performing this testing, the entity has satisfied PRC-005-2 requirement although the protective device may be unable to be returned to service under normal calibration adjustments. R3 states (the entity must):

R3. Each Transmission Owner, Generator Owner, and Distribution Provider shall implement and follow its PSMP and initiate resolution of any identified unresolved maintenance issues.

Also, when a failure occurs in a Protection System, power system security may be comprised, and notification of the failure must be conducted in accordance with relevant NERC Standards.

If I show the protective device out of service while it is being repaired then can I add it back as a new protective device when it returns? If not, my relay testing history would show that I was out of compliance for the last maintenance cycle.
The maintenance and testing requirements (R3) (in essence) state "…shall implement and follow its PSMP and initiate resolution of any identified unresolved maintenance issues..." The type of corrective activity is not stated; however it could include repairs or replacements.

Your documentation requirements will increase, of course, to demonstrate that your device tested bad and had corrective actions initiated. Your regional entity could very well ask for documentation showing status of your corrective actions.

13. Self-Monitoring Capabilities and Limitations

Microprocessor relay proponents have cited the self-monitoring capabilities of these products for nearly 20 years. Theoretically, any element that is monitored does not need a periodic manual test. A problem today is that the community of manufacturers and users has not created clear documentation of exactly what is and is not monitored. Some unmonitored but critical elements are buried in installed systems that are described as self-monitoring.

To utilize the extended time intervals allowed by monitoring the user must document that the monitoring attributes of the device match the minimum requirements listed in the Table 1.
Until users are able to document how all parts of a system which are required for the protective functions are monitored or verified (with help from manufacturers), they must continue with the unmonitored intervals established in Table 1 and Table 3.

Going forward, manufacturers and users can develop mappings of the monitoring within relays, and monitoring coverage by the relay of user circuits connected to the relay terminals.

To enable the use of the most extensive monitoring (and never again have a hands-on maintenance requirement), the manufacturers of the microprocessor-based self-monitoring components in the Protection System should publish for the user a document or map that shows:

- How all internal elements of the product are monitored for any failure that could impact Protection System performance.
- Which connected circuits are monitored by checks implemented within the product; how to connect and set the product to assure monitoring of these connected circuits; and what circuits or potential problems are not monitored.

With this information in hand, the user can document monitoring for some or all sections by:

- Presenting or referencing the product manufacturer's documents.
- Explaining in a system design document the mapping of how every component and circuit that is critical to protection is monitored by the microprocessor product(s) or by other design features.
- Extending the monitoring to include the alarm transmission facilities through which failures are reported within a given time frame to allocate where action can be taken to initiate resolution of the alarm attributed to a unresolved maintenance issue, so that failures of monitoring or alarming systems also lead to alarms and action.
- Documenting the plans for verification of any unmonitored components according to the requirements of Table 1 and Table 3.

13.1 Frequently Asked Question:

I can't figure out how to demonstrate compliance with the requirements for the highest level of monitoring of Protection Systems. Why does this Maintenance Standard describe a maintenance program approach I cannot achieve?

Demonstrating compliance with the requirements for the highest level of monitoring any particular component of Protection Systems is likely to be very involved, and may include detailed manufacturer documentation of complete internal monitoring within a device, comprehensive design drawing reviews, and other detailed documentation. This Standard does not presume to specify what documentation must be developed; only that it must be documented.

There may actually be some equipment available that is capable of meeting these highest levels of monitoring criteria, in which case it may be maintained according to the highest level of monitoring shown on the Tables. However, even if there is no equipment available today that can meet this level of monitoring; the Standard establishes the necessary requirements for when such equipment becomes available.

By creating a roadmap for development, this provision makes the Standard technology-neutral. The Standard Drafting Team wants to avoid the need to revise the Standard in a few years to accommodate technology advances that may be coming to the industry.

14. Notification of Protection System Failures

When a failure occurs in a Protection System, power system security may be compromised, and notification of the failure must be conducted in accordance with relevant NERC Standard(s). Knowledge of the failure may impact the system operator's decisions on acceptable loading conditions.

This formal reporting of the failure and repair status to the system operator by the Protection System owner also encourages the system owner to execute repairs as rapidly as possible. In some cases, a microprocessor relay or carrier set can be replaced in hours; wiring termination failures may be repaired in a similar time frame. On the other hand, a component in an electromechanical or early-generation electronic relay may be difficult to find and may hold up repair for weeks. In some situations, the owner may have to resort to a temporary protection panel, or complete panel replacement.

15. Maintenance Activities

Some specific maintenance activities are a requirement to ensure reliability. An example would be that a BES entity could be prudent in its protective relay maintenance but if its battery maintenance program is lacking then reliability could still suffer. The NERC glossary outlines a Protection System as containing specific components. PRC-005-2 requires specific maintenance activities be accomplished within a specific time interval. As noted previously, higher technology equipment can contain integral monitoring capability that actually performs maintenance verification activities routinely and often; therefore *manual intervention* to perform certain activities on these type components may not be needed.

15.1 Protective Relays (Table 1-1)

These relays are defined as the devices that receive the input signal from the current and voltage sensing devices and are used to isolate a faulted element of the BES. Devices that sense thermal, vibration, seismic, pressure, gas or any other non-electrical inputs are excluded.

Non-microprocessor based equipment is treated differently than microprocessor based equipment in the following ways, the relays should meet the asset owners' tolerances.

- Non-microprocessor devices must be tested with voltage and/or current applied to the device.
- Microprocessor devices may be tested through the integral testing of the device.
    - There is no specific protective relay commissioning test or relay routine test mandated.
    - There is no specific documentation mandated.

15.1.1 Frequently Asked Question:

What calibration tolerance should be applied on electromechanical relays?
Each entity establishes their own acceptable tolerances when applying protective relaying on their system. For some Protection System components, adjustment is required to bring measurement accuracy within the parameters established by the asset owner based on the specific application of the component. A calibration failure is the result if testing finds the specified parameters to be out of tolerance.

15.2 Voltage & Current Sensing Devices (Table 1-3)

These are the current and voltage sensing devices, usually known as instrument transformers. There is presently a technology available (fiber-optic Hall-effect) that does not utilize conventional transformer technology; these devices and other technologies that produce quantities that represent the primary values of voltage and current are considered to be a type of voltage and current sensing devices included in this Standard.

The intent of the maintenance activity is to verify the input to the protective relay from the device that produces the current or voltage signal sample.

There is no specific test mandated for these components. The important thing about these signals is to know that the expected output from these components actually reaches the protective relay. Therefore, the proof of the proper operation of these components also demonstrates the integrity of the wiring (or other medium used to convey the signal) from the current and voltage sensing device all the way to the protective relay. The following observations apply.

- There is no specific ratio test, routine test or commissioning test mandated.
- There is no specific documentation mandated.
- It is required that the signal be present at the relay.
- This expectation can be arrived at from any of a number of means; by calculation, by comparison to other circuits, by commissioning tests, by thorough inspection, or by any means needed to verify the circuit meets the asset owner's Protection System maintenance program.
- An example of testing might be a saturation test of a CT with the test values applied at the relay panel; this therefore tests the CT as well as the wiring from the relay all the back to the CT.
- Another possible test is to measure the signal from the voltage and/or current sensing devices, during load conditions, at the input to the relay.
- Another example of testing the various voltage and/or current sensing devices is to query the microprocessor relay for the real-time loading; this can then be compared to other devices to verify the quantities applied to this relay. Since the input devices have supplied the proper values to the protective relay then the verification activity has been satisfied. Thus event reports (and oscillographs) can be used to verify that the voltage and current sensing devices are performing satisfactorily.

- Still another method is to measure total watts and vars around the entire bus; this should add up to zero watts and zero vars thus proving the voltage and/or current sensing devices system throughout the bus.
- Another method for proving the voltage and/or current sensing devices is to complete commissioning tests on all of the transformers, cabling, fuses and wiring.
- Any other methods that provide documentation that the expected transformer values as applied to the inputs to the protective relays are acceptable.

15.2.1 Frequently Asked Questions:

What is meant by "…verify the current and voltage circuit inputs from the voltage and current sensing devices to the protective relays …" Do we need to perform ratio, polarity and saturation tests every few years?

No. You must verify that the protective relay is receiving the expected values from the voltage and current sensing devices (typically voltage and current transformers). This can be as difficult as is proposed by the question (with additional testing on the cabling and substation wiring to ensure that the values arrive at the relays); or simplicity can be achieved by other verification methods. While some examples follow, these are not intended to represent an all-inclusive list; technology advances and ingenuity should not be excluded from making comparisons and verifications:

- Compare the secondary values, at the relay, to a metering circuit, fed by different current transformers, monitoring the same line as the questioned relay circuit.

- Compare the individual phase secondary values at the relay panel (with additional testing on the panel wiring to ensure that the values arrive at those relays) with the other phases, and verify that residual currents are within expected bounds

- Observe all three phase currents and the residual current at the relay panel with an oscilloscope, observing comparable magnitudes and proper phase relationship, with additional testing on the panel wiring to ensure that the values arrive at the relays.

- Compare the values, as determined by the questioned relay (such as, but not limited to, a query to the microprocessor relay), to another protective relay monitoring the same line, with currents supplied by different CT's.

- Compare the secondary values, at the relay with values measured by test instruments (such as, but not limited to multi-meters, voltmeter, clamp-on ammeters, etc) and verified by calculations and known ratios to be the values expected. For example a single PT on a 100KV bus will have a specific secondary value that when multiplied by the PT ratio arrives at the expected bus value of 100KV.

- Query SCADA for the power flows at the far end of the line protected by the questioned relay, compare those SCADA values to the values as determined by the questioned relay.

- Totalize the Watts and VARs on the bus and compare the totals to the values as seen by the questioned relay.

The point of the verification procedure is to ensure that all of the individual components are functioning properly; and that, an ongoing proactive procedure is in place to re-check the various components of the protective relay measuring systems.

Is wiring insulation or hi-pot testing required by this Maintenance Standard?
No, wiring insulation and equipment hi-pot testing are not specifically required by the Maintenance Standard. However, if the method of verifying CT and PT inputs to the relay involves some other method than actual observation of current and voltage transformer secondary inputs to the relay, it might be necessary to perform some sort of cable integrity test to verify that the instrument transformer secondary signals are actually making it to the relay and not being shunted off to ground. For instance, you could use CT excitation tests and PT turns ratio tests and compare to baseline values to verify that the instrument transformer outputs are acceptable. However, to conclude that these acceptable transformer instrument output signals are actually making it to the relay inputs, it also would be necessary to verify the insulation of the wiring between the instrument transformer and the relay.

My plant generator and transformer relays are electromechanical and do not have metering functions as do microprocessor based relays. In order for me to compare the instrument transformer inputs to these relays to the secondary values of other metered instrument transformers monitoring the same primary voltage and current signals, it would be necessary to temporarily connect test equipment like voltmeters and clamp on ammeters to measure the input signals to the relays. This practice seems very risky and a plant trip could result if the technician were to make an error while measuring these current and voltage signals. How can I avoid this risk? Also, what if no other instrument transformers are available which monitor the same primary voltage or current signal?
Comparing the input signals to the relays to the outputs of other independent instrument transformers monitoring the same primary current or voltage is just one method of verifying the instrument transformer inputs to the relays but is not required by the Standard. Plants can choose how to best manage their risk. If online testing is deemed too risky, offline tests such as, but not limited to, CT excitation test and PT turns ratio tests can be compared to baseline data and be used in conjunction with CT and PT secondary wiring insulation verification tests to adequately "verify the current and voltage circuit inputs from the voltage and current sensing devices to the protective relays …" while eliminating the risk of tripping an in service generator or transformer. Similarly, this same offline test methodology can be used to verify the relay input voltage and current signals to relays when there are no other instrument transformers monitoring available for purposes of signal comparison.

15.3 Control circuitry associated with protective functions (Table 1-5)

This component of Protection Systems includes the trip coil(s) of the circuit breaker, circuit switcher or any other interrupting device. It includes the wiring from the batteries to the relays. It includes the wiring (or other signal conveyance) from every trip output to every trip coil. It includes any device needed for the correct processing of the needed trip signal to the trip coil of the interrupting device; this requirement is meant to capture inputs and outputs to and from a protective relay that are necessary for the correct operation of the protective functions. In short, every trip path must be verified; the method of verification is optional to the asset owner. An example of testing methods to accomplish this might be to verify, with a volt-meter, the existence of the proper voltage at the open contacts, the open circuited input circuit and at the trip coil(s). As every parallel trip path has similar failure modes, each trip path from relay to trip coil must be verified. Each trip coil must be tested to trip the circuit breaker (or other interrupting device) at least once. There is a requirement to operate the circuit breaker (or other interrupting device) at least once every six years as part of the complete functional test. If a suitable monitoring system is installed that verifies every parallel trip path then the manual-intervention testing of those parallel trip paths can be eliminated, however the actual operation of the circuit breaker must still occur at least once every six years. This 6-year tripping requirement can be completed as easily as tracking the real-time fault-clearing operations on the circuit breaker or tracking the trip coil(s) operation(s) during circuit breaker routine maintenance actions.

The circuit-interrupting device should not be confused with a motor-operated disconnect. The intent of this Standard is to require maintenance intervals and activities on Protection Systems equipment and not just all system isolating equipment.

It is necessary, however, to classify a device that actuates a high-speed auto-closing ground switch as an interrupting device if this ground switch is utilized in a Protection System and forces a ground fault to occur that then results in an expected Protection System operation to clear the forced ground fault. The SDT believes that this is essentially a transferred-tripping device without the use of communications equipment. If this high-speed ground switch is "…designed to provide protection for the BES…" then this device needs to be treated as any other Protection System component. The control circuitry would have to be tested within 12 years and any electromechanically operated device will have to be tested every 6 years. If the spring-operated ground switch can be disconnected from the solenoid triggering unit then the solenoid triggering unit can easily be tested without the actual closing of the ground blade.

The dc control circuitry also includes each auxiliary tripping relay (94) and each lock-out relay (86) that may exist in any particular trip scheme. If these devices are electromechanical components then they must be trip tested. The PSMT SDT considers these components to share some similarities in failure modes as electromechanical protective relays; as such there is a six year maximum interval between mandated maintenance tasks unless PBM is applied.

Contacts of the 86 or 94 that pass the trip current on to the circuit interrupting device trip coils will have to be checked as part of the 12 year requirement. Normally-open contacts that are not

used to pass a trip signal and normally-closed contacts do not have to be verified. Verification of the tripping paths is the requirement.

New technology is also accommodated here; there are some tripping systems that have replaced the traditional hard-wired trip circuitry with other methods of trip-signal conveyance such as fiber-optics. It is the intent of the PSMT SDT to include this, and any other, technology that is used to convey a trip signal from a protective relay to a circuit breaker (or other interrupting device) within this category of equipment.

15.3.1 Frequently Asked Questions:

Is it permissible to verify circuit breaker tripping at a different time (and interval) than when we verify the protective relays and the instrument transformers?
Yes, provided the entire Protective System is tested within the individual components' maximum allowable testing intervals.

The Protection System Maintenance Standard describes requirements for verifying the tripping of circuit breakers. What is this telling me about maintenance of circuit breakers?
Requirements in PRC-005-2 are intended to verify the integrity of tripping circuits, including the breaker trip coil, as well as the presence of auxiliary supply (usually a battery) for energizing the trip coil if a protection function operates. Beyond this, PRC-005-2 sets no requirements for verifying circuit breaker performance, or for maintenance of the circuit breaker.

How do I test each dc Control Circuit trip path, as established in Table 1-5 "Protection System Control Circuitry (Trip coils and auxiliary relays)"?
Table 1-5 specifies that each breaker trip coil, auxiliary relay that carries trip current to a trip coil, and lockout relays that carry trip current to a trip coil must be operated within the specified time period. The required operations may be via targeted maintenance activities, or by documented operation of these devices for other purposes such as fault clearing.

Are high-speed ground switch trip coils included in the dc control circuitry?
Yes. PRC-005-2 includes high-speed grounding switch trip coils within the dc control circuitry to the degree that the initiating Protection Systems are characterized as "transmission Protection Systems."

Does the control circuitry and trip coil of a non-BES breaker, tripped via a BES protection component, have to be tested per Table 1.5? (Refer to Table 3)
An example of an otherwise non-BES circuit breaker that is tripped via a BES protection component might be (but is not limited to) a 12.5KV circuit breaker feeding (non-black-start) radial loads but has a trip that originates from an under-frequency (81) relay.

- The relay must be verified.
- The voltage signal to the relay must be verified.
- All of the relevant dc supply tests still apply.
- The unmonitored trip circuit between the relay and any lock-out or auxiliary relay must be verified every 12 years.

- The unmonitored trip circuit between the lock-out or auxiliary relay does not have to be proven with an electrical trip.
- In the case where there is no lock-out or auxiliary tripping relay used, the trip circuit does not have to be proven with an electrical trip.
- The trip coil of the circuit breaker does not have to be individually proven with an electrical trip.

Do I have to verify operation of breaker "a" contacts or any other normally closed auxiliary contacts in the trip path of each breaker as part of my control circuit test?

Operation of normally-closed contacts does not have to be verified. Verification of the tripping paths is the requirement. The continuity of the normally closed contacts will be verified when the tripping path is verified.

15.4 Batteries and DC Supplies (Table 1-4)

IEEE guidelines were consulted to arrive at the maintenance activities for batteries. The following guidelines were used: IEEE 450 (for Vented Lead-Acid batteries), IEEE 1188 (for Valve-Regulated Lead-Acid batteries) and IEEE 1106 (for Nickel-Cadmium batteries).

The currently proposed NERC definition of a Protection System is

- Protective relays which respond to electrical quantities,
- Communications systems necessary for correct operation of protective functions,
- Voltage and current sensing devices providing inputs to protective relays,
- Station dc supply associated with protective functions (including station batteries, battery chargers, and non-battery-based dc supply), and
- Control circuitry associated with protective functions through the trip coil(s) of the circuit breakers or other interrupting devices."
- The station battery is not the only component that provides dc power to a Protection System. In the new definition for Protection System "station batteries" are replaced with "station dc supply" to make the battery charger and dc producing stored energy devices (that are not a battery) part of the Protection System that must be maintained.

The PSMT SDT recognizes that there are several technological advances in equipment and testing procedures that allow the owner to choose how to verify that a battery string is free of open circuits. The term "continuity" was introduced into the Standard to allow the owner to choose how to verify continuity of a battery set by various methods, and not to limit the owner to the two methods recommended in the IEEE standards. Continuity as used in Table 1-4 of the Standard refers to verifying that there is a continuous current path from the positive terminal of the station battery set to the negative terminal. Without verifying continuity of a station battery, there is no way to determine that the station battery is available to supply dc power to the station.

An open battery string will be an unavailable power source in the event of loss of the battery charger.

Batteries cannot be a unique population segment of a Performance-Based Maintenance Program (PBM) because there are too many variables in the electrochemical process to completely isolate all of the performance-changing criteria necessary for using PBM on battery systems. However, nothing precludes the use of a PBM process for any other part of a dc supply besides the batteries themselves.

15.4.1 Frequently Asked Questions:

What constitutes the station dc supply as mentioned in the definition of Protective System?
The previous definition of Protection System includes batteries, but leaves out chargers. The latest definition includes chargers as well as dc systems that do not utilize batteries. This revision of PRC-005-2 is intended to capture these devices that were not included under the previous definition. The station direct current (dc) supply normally consists of two components: the battery charger and the station battery itself. There are also emerging technologies that provide a source of dc supply that does not include either a battery or charger.

Battery Charger - The battery charger is supplied by an available ac source. At a minimum, the battery charger must be sized to charge the battery (after discharge) and supply the constant dc load. In many cases, it may be sized also to provide sufficient dc current to handle the higher energy requirements of tripping breakers and switches when actuated by the protective relays in the Protection System.

Station Battery - Station batteries provide the dc power required for tripping and for supplying normal dc power to the station in the event of loss of the battery charger. There are several technologies of battery that require unique forms of maintenance as established in Table 1-4.

Emerging Technologies - Station dc supplies are currently being developed that use other energy storage technologies beside the station battery to prevent loss of the station dc supply when ac power is lost. Maintenance of these station dc supplies will require different kinds of tests and inspections. Table 1-4 presents maintenance activities and maximum allowable testing intervals for these new station dc supply technologies. However, because these technologies are relatively new the maintenance activities for these station dc supplies may change over time.

What did the PSMT SDT mean by “continuity” of the dc supply?
The PSMT SDT recognizes that there are several technological advances in equipment and testing procedures that allow the owner to choose how to verify that a battery string is free of open circuits. The term “continuity” was introduced into the Standard to allow the owner to choose how to verify continuity of a battery set by various methods, and not to limit the owner to the two methods recommended in the IEEE standards. Continuity as used in Table 1-4 of the Standard refers to verifying that there is a continuous current path from the positive terminal of the station battery set to the negative terminal. Without verifying continuity of a station battery, there is no way to determine that the station battery is available to supply dc power to the station.

An open battery string will be an unavailable power source in the event of loss of the battery charger.

The current path through a station battery from its positive to its negative connection to the dc control circuits is composed of two types of elements. These path elements are the electrochemical path through each of its cells and all of the internal and external metallic connections and terminations of the batteries in the battery set. If there is loss of continuity (an open circuit) in any part of the electrochemical or metallic path the battery set will not be available for service. In the event of the loss of the ac source or battery charger, the battery must be capable of supplying dc current, both for continuous dc loads and for tripping breakers and switches. Without continuity, the battery cannot perform this function.
At generating stations and large transmission stations where battery chargers are capable of handling the maximum current required by the Protection System, there are still problems that could potentially occur when the continuity through the connected battery is interrupted.

- Many battery chargers produce harmonics which can cause failure of dc power supplies in microprocessor based protective relays and other electronic devices connected to station dc supply. In these cases, the substation battery serves as a filter for these harmonics. With the loss of continuity in the battery, the filter provided by the battery is no longer present.

- Loss of electrical continuity of the station battery will cause, regardless of the battery charger's output current capability, a delayed response in full output current from the charger. Almost all chargers have an intentional 1 to 2 second delay to switch from a low substation dc load current to the maximum output of the charger. This delay would cause the opening of circuit breakers to be delayed which could violate system performance standards.

Monitoring of the station dc supply voltage will not indicate that there is a problem with the dc current path through the battery unless the battery charger is taken out of service. At that time a break in the continuity of the station battery current path will be revealed because there will be no voltage on the station dc circuitry. This particular test method, while proving battery continuity, may not be acceptable to all installations.

Although the Standard prescribes what must be accomplished during the maintenance activity it does not prescribe how the maintenance activity should be accomplished. There are several methods that can be used to verify the electrical continuity of the battery. These are not the only possible methods, simply a sampling of some methods:

- One method is to measure that there is current flowing through the battery itself by a simple clamp on milliamp-range ammeter. A battery is always either charging or discharging. Even when a battery is charged there is still a measurable float charge current that can be detected to verify that there is continuity in the electrical path through the battery.

- A simple test for continuity is to remove the battery charger from service and verify that the battery provides voltage and current to the dc system. However, the behavior of the

various dc-supplied equipment in the station should be considered before using this approach.

- Manufacturers of microprocessor controlled battery chargers have developed methods for their equipment to periodically (or continuously) test for battery continuity For example, one manufacturer periodically reduces the float voltage on the battery until current from the battery to the dc load can be measured to confirm continuity.

- Applying test current (as in some ohmic testing devices, or devices for locating dc grounds) will provide a current that when measured elsewhere in the string, will prove that the circuit is continuous.

- Internal ohmic measurements of the cells and units of Lead Acid Batteries (VRLA & VLA) can detect lack of continuity within the cells of a battery string and when used in conjunction with resistance measurements of the battery's external connections can prove continuity. Also some methods of taking internal ohmic measurements by their very nature can prove the continuity of a battery string without having to use the results of resistance measurements of the external connections.

- Specific Gravity tests can infer continuity because without continuity there could be no charging occurring and if there is no charging then Specific Gravity will go down below acceptable levels.

No matter how the electrical continuity of a battery set is verified it is a necessary maintenance activity that must be performed at the intervals prescribed by Table 1-4 to insure that the station dc supply has a path that can provide the required current to the Protection System at all times.

When should I check the station batteries to see if they have sufficient energy to perform as designed?

The answer to this question depends on the type of battery (Valve-Regulated Lead-Acid, Vented Lead-Acid, or Nickel-Cadmium), and the maintenance activity chosen.

For example, if you have a Valve-Regulated Lead-Acid (VRLA) station battery, and you have chosen to evaluate the measured cell/unit internal ohmic values to the battery cell's baseline, you will have to perform verification at a maximum maintenance interval of no greater than every six months. While this interval might seem to be quite short, keep in mind that the 6 month interval is consistent with IEEE guidelines for VRLA batteries; this interval provides an accumulation of data that better shows when a VRLA battery is no longer capable of its design capacity.

If, for a VRLA station battery, you choose to conduct a performance capacity test on the entire station battery as the maintenance activity, then you will have to perform verification at a maximum maintenance interval of no greater than every 3 calendar years.

How is a baseline established for cell/unit internal ohmic measurements?

Establishment of cell/unit internal ohmic baseline measurements should be completed when lead acid batteries are newly installed. To ensure that the baseline ohmic cell/unit values are most indicative of the station batteries ability to perform as designed they should be made upon

installation of the station battery and the completion of a performance test of the battery's capacity.

When internal ohmic measurements are taken, consistent test equipment should be used to establish the baseline and used for the future trending of the cells internal ohmic measurements because of variances in test equipment and the type of ohmic measurement used by different manufacturer's equipment. Keep in mind that one manufacturer's "Conductance" test equipment does not produce similar results as another manufacturer's "Impedance" test equipment even though both manufacturers have produced "Ohmic" test equipment.

For all new installations of Valve-Regulated Lead-Acid (VRLA) batteries and Vented Lead-Acid (VLA) batteries, where trending of the cells internal ohmic measurements to a baseline are to be used to determine the ability of the station battery to perform as designed, the establishment of the baseline as described above should be followed at the time of installation to insure the most accurate trending of the cell/unit. However, often for older VRLA batteries the owners of the station batteries have not established a baseline at installation. Also for owners of VLA batteries who want to establish a maintenance activity which requires trending of measured ohmic values to a baseline, there was typically no baseline established at installation of the station battery to trend to.

To resolve the problem of the unavailability of baseline internal ohmic measurements for the individual cell/unit of a station battery, many manufacturers of internal ohmic measurement devices have established libraries of baseline values for VRLA and VLA batteries using their testing device. Also several of the battery manufacturers have libraries of baselines for their products that can be used to trend to. However it is important that when using battery manufacturer supplied data that it is verified that the baseline readings to be used were taken with the same ohmic testing device that will be used for future measurements (for example "Conductance Readings" from one manufacturer's test equipment do not correlate to "Impedance Readings" from a different manufacturer's test equipment).

Although many manufacturers may have provided base line values which will allow trending of the internal ohmic measurements over the remaining life of a station battery, these baselines are not the actual cell/unit measurements for the battery being trended. It is important to have a baseline tailored to the station battery to more accurately use the tool of ohmic measurement trending. That more customized baseline can only be created by following the establishment of a baseline for each cell/unit at the time of installation of the station battery.

Why determine the State of Charge?

Even though there is no present requirement to check the state of charge of a battery, it can be a very useful tool in determining the overall condition of a battery system. The following discussions are offered as a general reference.

When a battery is fully charged the battery is available to deliver its existing capacity. As a battery is discharged its ability to deliver its maximum available capacity is diminished. It is necessary to determine if the state of charge has dropped to an unacceptable level.

IEEE Standards 450, 1188, and 1106 for Vented Lead-Acid (VLA), Valve-Regulated Lead-Acid (VRLA), and Nickel-Cadmium (NiCd) batteries respectively discuss state of charge in great

detail in their standards or annexes to their standards. The above IEEE standards are excellent sources for describing how to determine state of charge of the battery system.

What is State of Charge and how can it be determined in a station battery?
The state of charge of a battery refers to the ratio of residual capacity at a given instant to the maximum capacity available from the battery. When a battery is fully charged the battery is available to deliver its existing capacity. As a battery is discharged its ability to deliver its maximum available capacity is diminished. Knowing the amount of energy left in a battery compared with the energy it had when it was fully charged gives the user an indication of how much longer a battery will continue to perform before it needs recharging.

For Vented Lead-Acid (VLA) batteries which use accessible liquid electrolyte, a hydrometer can be used to test the specific gravity of each cell as a measure of its state of charge. The hydrometer depends on measuring changes in the weight of the active chemicals. As the battery discharges the active electrolyte, sulphuric acid, is consumed and the concentration of the sulphuric acid in water is reduced. This in turn reduces the specific gravity of the solution in direct proportion to the state of charge. The actual specific gravity of the electrolyte can therefore be used as an indication of the state of charge of the battery. Hydrometer readings may not tell the whole story, as it takes a while for the acid to get mixed up in the cells of a VLA battery. If measured right after charging, you might see high specific gravity readings at the top of the cell, even though it is much less at the bottom. Conversely if taken shortly after adding water to the cell the specific gravity readings near the top of the cell will be lower than those at the bottom.

Nickel-Cadmium batteries, where the specific gravity of the electrolyte does not change during battery charge and discharge, and Valve-Regulated Lead-Acid (VRLA) batteries, where the electrolyte is not accessible, cannot have their state of charge determined by specific gravity readings. For these two types of batteries and also for VLA batteries, where another method besides taking hydrometer readings is desired, the state of charge may be determined by using the battery charger and taking voltage and current readings during float and equalize (high-rate charge mode). This method is an effective means of determining when the state of charge is low and when it is approaching a fully charged condition which gives the assurance that the available battery capacity will be maximized.

Why determine the Connection Resistance?
High connection resistance can cause abnormal voltage drop or excessive heating during discharge of a station battery. During periods of a high rate of discharge of the station battery a very high resistance can cause severe damage. The maintenance requirement to verify battery terminal connection resistance in Table 1-4 is established to verify that the integrity of all battery electrical connections is acceptable. This verification includes cell-to-cell (intercell) and external circuit terminations.

Adequacy of the electrical terminations can be determined by comparing resistance measurements for all connections taken at the time of station battery's installation to the same resistance measurements taken at the maintenance interval chosen not to exceed the maximum

maintenance interval of Table 1-4. Trending of the interval measurements to the baseline measurements will identify any degradation in the battery connections. When the connection resistance values exceed the acceptance criteria for the connection, the connection is typically disassembled, cleaned, reassembled and measurements taken to verify that the measurements are adequate when compared to the baseline readings.

IEEE Standard 450 for Vented Lead-Acid (VLA) batteries "informative" annex F, and IEEE Standard 1188 for Valve-Regulated Lead-Acid (VRLA) batteries "informative" annex D provide excellent information and examples on performing connection resistance measurements using a microohmmeter and connection detail resistance measurements. Although this information is contained in standards for lead acid batteries the information contained is applicable to Nickel-Cadmium batteries also.

What conditions should be inspected for visible battery cells?
The maintenance requirement to inspect the cell condition of all station battery cells where the cells are visible is a maintenance requirement of Table 1-4. Station batteries are different from any other component in the Protection Station because they are a perishable product due to the electrochemical process which is used to produce dc electrical current and voltage. This inspection is a detailed visual inspection of the cells for abnormalities that occur in the aging process of the cell. In VLA battery visual inspections, some of the things that the inspector is typically looking for on the plates are signs of sulfation of the plates, abnormal color (possible copper contamination) and abnormal conditions such as cracked grids. The visual inspection could look for symptoms of hydration that would indicate that the battery has been left in a completely discharged state for a prolonged period. Besides looking at the plates for signs of aging, all internal connections such as the bus bar connection to each plate and the connections to all posts of the battery need to be visually inspected for abnormalities. In a complete visual inspection for the condition of the cell the cell plates, separators and sediment space of each cell must be looked at for signs of deterioration. An inspection of the station battery's cell condition also includes looking at all terminal posts and cell-to-cell electric connections to ensure they are corrosion free. The case of the battery containing the cell or cells must be inspected for cracks and electrolyte leaks through cracks and the post seals.

This maintenance activity cannot be extended beyond the maximum maintenance interval of Table 1-4 by a Performance-Based Maintenance Program (PBM) because of the electrochemical aging process of the station battery nor can there be any monitoring associated with it because there must be a visual inspection involved in the activity. A remote visual inspection could possibly be done, but its interval must be no greater than the maximum maintenance interval of Table 1-4.

Why consider the ability of the station battery to perform as designed?
Determining the ability of a station battery to perform as designed is critical in the process of determining when the station battery must be replaced or when an individual cell or battery unit must be removed or replaced. For lead acid batteries the ability to perform as designed can be determined in more than one manner.

The two acceptable methods for proving that a station lead acid battery can perform as designed are based on two different philosophies. The first maintenance activity requires tests and evaluation of the internal ohmic measurements on each of the individual cells/units of the station battery to determine that each component can perform as designed and therefore the entire station battery can be verified to perform as designed. The second activity requires a capacity discharge test of the entire station battery to verify that degradation of one or several components (cells) in the station battery has not deteriorated to a point where the total capacity of the station battery system falls below its designed rating.

The first maintenance activity listed in Table 1-4 for verifying that a station battery can perform as designed uses maximum maintenance intervals for evaluating internal ohmic measurements in relation to their baseline measurements that are based on industry experience, EPRI technical reports and application guides, and the IEEE battery standards. By evaluating the internal ohmic measurements for each cell and comparing that measurement to the cell's baseline ohmic measurement low-capacity cells can be identified and eliminated or the whole station battery replaced to keep the station battery capable of performing as designed. Since the philosophy behind internal ohmic measurement evaluation is based on the fact that each battery component must be verified to be able to perform as designed, the interval for verification by this maintenance activity must be shorter to catch individual cell/unit degradation.

It should be noted that even if a lead acid battery unit is composed of multiple cells where the ohmic measurement of each cell cannot be taken, the ohmic test can still be accomplished. The data produced becomes trending data on the multi-cell unit instead of trending individual cells. Care must be taken in the evaluation of the ohmic measures of entire units to detect a bad cell that has a poor ohmic value. Good ohmic values of other cells in the same battery unit can make it harder to detect the poor ohmic measurement of a bad cell because the only ohmic measurement available is of all the cells in the battery unit.

This first maintenance activity is applicable only for Vented Lead-Acid (VLA) and Valve-Regulated Lead-Acid (VRLA) batteries; this trending activity has not shown to be effective for NiCd batteries thus the only choices for owners of NiCd batteries are the performance tests of the second activity (see applicable IEEE guideline for specifics on performance tests).

The second maintenance activity listed in Table 1-4 for verifying that a station battery can perform as designed uses maximum maintenance intervals for capacity testing that were designed to align with the IEEE battery standards. This maintenance activity is applicable for Vented Lead-Acid, Valve-Regulated Lead-Acid, and Nickel-Cadmium batteries.
The maximum maintenance interval for discharge capacity testing is longer than the interval for testing and evaluation of internal ohmic cell measurements. An individual component of a station battery may degrade to an unacceptable level without causing the total station battery to fall below its designed rating under capacity testing.

IEEE Standards 450, 1188, and 1106 for vented lead-acid (VLA), Valve-Regulated Lead-Acid (VRLA), and Nickel-Cadmium (NiCd) batteries respectively (which together are the most commonly used substation batteries on the BES) go into great detail about capacity testing of the

entire battery set to determine that a battery can perform as designed or needs to be replaced soon.

Why in Table 1-4 of PRC-005-2 is there a maintenance activity to inspect the structural intergrity of the battery rack?
The three IEEE standards (1188, 450, and 1106) for VRLA, Vented Lead-Acid, and Nickel-Cadmium batteries all recommend that as part of any battery inspection the battery rack should be inspected. The purpose of this inspection is to verify that the battery rack is correctly installed and has no deterioration that could weaken its structural integrity.
Because the battery rack is specifically designed for the battery that is mounted on it, weakening of its structural members by rust or corrosion can physically jeopardize the battery.

What is required to comply with the "Unintentional dc Grounds" requirement?
In most cases, the first ground that appears on a battery is not a problem. It is the unintentional ground that appears on the opposite pole that becomes problematic. Even then many systems are designed to operate favorably under some unintentional DC ground situations. It is up to the owner of the Protection System to determine if corrective actions are needed on detected unintentional DC grounds. The Standard merely requires that a check be made for the existence of Unintentional DC Grounds. Obviously a "check-off" of some sort will have to be devised by the inspecting entity to document that a check is routinely done for Unintentional DC Grounds because of the possible consequences to the Protection System.

Where the Standard refers to "all cells" is it sufficient to have a documentation method that refers to "all cells" or do we need to have separate documentation for every cell? For example do I need 60 individual documented check-offs for good electrolyte level or would a single check-off per bank be sufficient?
A single check-off per battery bank is sufficient for documentation, as long as the single check-off attests to checking all cells/units.

Does this Standard refer to Station batteries or all batteries, for example Communications Site Batteries?
This Standard refers to Station Batteries. The drafting team does not believe that the scope of this Standard refers to communications sites. The batteries covered under PRC-005-2 are the batteries that supply the trip current to the trip coils of the interrupting devices that are a part of the Protection System. The SDT believes that a loss of power to the communications systems at a remote site would cause the communications systems associated with protective relays to alarm at the substation. At this point the corrective actions can be initiated.

My VRLA batteries have multiple-cells within an individual battery jar (or unit); how am I expected to comply with the cell-to-cell ohmic measurement requirements on these units that I cannot get to?
Measurement of cell/unit (not all batteries allow access to "individual cells" some "units" or jars may have multiple cells within a jar) internal ohmic values of all types of lead acid batteries where the cells of the battery are not visible is a station dc supply maintenance activity in Table 1-4.

What are cell/unit internal ohmic measurements?
With the introduction of Valve-Regulated Lead-Acid (VRLA) batteries to station dc supplies in the 1980's several of the standard maintenance tools that are used on Vented Lead-Acid (VLA) batteries were unable to be used on this new type of lead-acid battery to determine its state of health. The only tools that were available to give indication of the health of these new VRLA batteries were voltage readings of the total battery voltage, the voltage of the individual cells and periodic discharge tests.

In the search for a tool for determining the health of a VRLA battery several manufacturers studied the electrical model of a lead acid battery's current path through its cell. The overall battery current path consists of resistance and inductive and capacitive reactance. The inductive reactance in the current path through the battery is so minuscule when compared to the huge capacitive reactance of the cells that it is often ignored in most circuit models of the battery cell. Taking the basic model of a battery cell manufacturers of battery test equipment have developed and marketed testing devices to take measurements of the current path to detect degradation in the internal path through the cell.

In the battery industry these various types of measurements are referred to as ohmic measurements. Terms used by the industry to describe ohmic measurements are ac conductance, ac impedance, and dc resistance. They are defined by the test equipment providers and IEEE and refer to the method of taking ohmic measurements of a lead acid battery. For example in one manufacturer's ac conductance equipment measurements are taken by applying a voltage of a known frequency and amplitude across a cell or battery unit and observing the ac current flow it produces in response to the voltage. A manufacturer of an ac impedance meter measures ac current of a known frequency and amplitude that is passed through the whole battery string and determines the impedances of each cell or unit by measuring the resultant ac voltage drop across them. On the other hand dc resistance of a cell is measured by a third manfacturer's equipment by applying a dc load across the cell or unit and measuring the step change in both the voltage and current to calculate the internal dc resistance of the cell or unit.

It is important to note that because of the rapid development of the market for ohmic measurement devices there were no standards developed or used to mandate the test signals used in making ohmic measurements. Manufacturers using proprietary methods and applying different frequencies and magnitudes for their signals have developed a diversity of measurement devices. This diversity in test signals coupled with the three different types of ohmic measurements techniques (impedance conductance and resistance) make it impossible to get the same ohmic measurement for a cell with different ohmic measurement devices. However, IEEE has recognized the great value for choosing one device for ohmic measurement, no matter who makes it or the method to calculate the ohmic measurement. The only caution given by IEEE and the battery manufacturers is that when trending the cells of a lead acid station battery consistent ohmic measurement devices should be used to establish the baseline measurement and to trend the battery set for its entire life.

For VRLA batteries both IEEE Standard 1188 (Maintenance, Testing and Replacement of VRLA Batteries) and IEEE Standard 1187 (Installation Design and Installation of VRLA Batteries) recognize the importance of the maintenance activity of establishing a baseline for "cell/unit

internal ohmic measurements (impedance, conductance and resistance)" and trending them at frequent intervals over the life of the battery. There are extensive discussions about the need for taking these measurements in these standards. IEEE Standard 1188 requires taking internal ohmic values as described in Annex C4 during regular inspections of the station battery. For VRLA batteries IEEE Standard 1188 in talking about the necessity of establishing a base line and trending it over time says, "depending on the degree of change a performance test, cell replacement or other corrective action may be necessary.

For VLA batteries IEEE Standard 484 (Installation of VLA batteries) gives several guidelines about establishing baseline measurements on newly installed lead acid stationary batteries. The standard also discusses the need to look for significant changes in the ohmic measurements, the caution that measurement data will differ with each type of model of instrument used, and lists a number of factors that affect ohmic measurements.

At the beginning of the 21st century EPRI conducted a series of extensive studies to determine the relationship of internal ohmic measurements to the capacity of a lead acid battery cell. The studies indicated that internal ohmic measurements were in fact a good indicator of a lead acid battery cell's capacity but because users often were only interested in the total station battery capacity and the technology does not precisely predict overall battery capacity, if a user only needs "an accurate measure of the overall battery capacity" they should "perform a battery capacity test."

Prior to the EPRI studies some large and small companies which owned and maintained station dc supplies in NERC Protection Systems developed maintenance programs where trending of ohmic measurements of cells/units of the station's battery became the maintenance activity for determining if the station battery could perform as designed. By evaluation of the trending of the ohmic measurements over time the owner could track the performance of the individual components of the station battery and determine if a total station battery or components of it required capacity testing, removal, replacement or in many instances replacement of the entire station battery. By taking this approach these owners have eliminated having to perform capacity testing at prescribed intervals to determine if a battery needs to be replaced and are still able to effectively determine if a station battery can perform as designed.

Why verify voltage?

There are two required maintenance activities associated with verification of dc voltages in Table 1-4. These two required activities are to verify station dc supply voltage and float voltage of the battery charger, and have different maximum maintenance intervals. Both of these voltage verification requirements relate directly to the battery charger maintenance.

The verification of the dc supply voltage is simply an observation of battery voltage to prove that the charger has not been lost or is not malfunctioning. Low battery voltage below float voltage indicates that the battery may be on discharge and if not corrected the station battery could discharge down to some extremely low value that will not operate the Protection System. High voltage, close to or above the maximum allowable dc voltage for equipment connected to the

station dc supply indicates the battery charger may be malfunctioning by producing high dc voltage levels on the Protection System. If corrective actions are not taken to bring the high voltage down, the dc power supplies and other electronic devices connected to the station dc supply may be damaged. The maintenance activity of verifying the float voltage of the battery charger is not to prove that a charger is lost or producing high voltages on the station dc supply, but rather to prove that the charger is properly floating the battery within the proper voltage limits.

Why check for the electrolyte level?

In Vented Lead-Acid (VLA) and Nickel-Cadmium (NiCd) batteries the visible electrolyte level must be checked as one of the required maintenance activities that must be performed at an interval that is equal to or less than the maximum maintenance interval of Table 1-4. Because the electrolyte level in Valve-Regulated Lead-Acid (VRLA) batteries cannot be observed there is no maintenance activity listed in Table 1-4 of the Standard for checking the electrolyte level. Low electrolyte level of any cell of a VLA or NiCd station battery is a condition requiring correction. Typically the electrolyte level should be returned to an acceptable level for both types of batteries (VLA and NiCd) by adding distilled or other approved-quality water to the cell.

Often people confuse the interval for watering all cells required due to evaporation of the electrolyte in the station battery cells with the maximum maintenance interval required to check the electrolyte level. In many of the modern station batteries the jar containing the electrolyte is so large with the band between the high and low electrolyte level so wide that normal evaporation which would require periodic watering of all cells takes several years to occur. However, because loss of electrolyte due to cracks in the jar, overcharging of the station battery or other unforeseen events can cause rapid loss of electrolyte the shorter maximum maintenance intervals for checking the electrolyte level are required. A low level of electrolyte in a VLA battery cell which exposes the tops of the plates can cause the exposed portion of the plates to accelerated sulfation resulting in loss of cell capacity. Also, in a VLA battery where the electrolyte level goes below the end of the cell withdrawal tube or filling funnel, gasses can exit the cell by the tube instead of the flame arrester and present an explosion hazard.

Why does it appear that there are two maintenance activities in Table 1-4(b) (for VRLA batteries) that appear to be the same activity and have the same maximum maintenance interval?

There are two different and distinct reasons for doing almost the same maintenance activity at the same interval for Valve-Regulated Lead-Acid (VRLA) batteries. The first similar activity for VRLA batteries (Table 1-4(b)) that has the same maximum maintenance interval is to “measure battery cell/unit internal ohmic values.” Part of the reason for this activity is because the visual inspection of the cell condition is unavailable for VRLA batteries. Besides the requirement to measure the internal ohmic measurements of VRLA batteries to determine the internal health of the cell, the maximum maintenance interval for this activity is significantly shorter than the interval for Vented Lead-Acid (VLA) due to some unique failure modes for VRLA batteries. Some of the potential problems that VRLA batteries are susceptible to that do not affect VLA batteries are thermal runaway, cell dry-out, and cell reversal when one cell has a very low capacity.

The other similar activity listed in Table 1-4(b) is “verify that the station battery can perform as designed by evaluating the measured cell/unit internal ohmic values to station battery baseline.” This activity allows an owner the option to choose between this activity with its much shorter maximum maintenance interval or the longer maximum maintenance interval for the maintenance activity to “Verify that the station battery can perform as designed by conducting a performance, service, or modified performance capacity test of the entire battery bank.”

For VRLA batteries, there are two drivers for internal ohmic readings. The first driver is for a means to trend battery life. A comparison and trending against the baseline new battery ohmic reading can be used in lieu of capacity tests to determine remaining battery life. Remaining battery life is analogous to stating that the battery is still able to "perform as designed". This is the intent of the “capacity 6 month test” at Row 4 on Table 1-4b.

The second big driver is VRLA batteries tendency for thermal runaway. This is the intent of the “thermal runaway test” at Row 2 on Table 1-4b. In order to detect a cell in thermal runaway, you need not have a formal trending program to track when a cell has reached a 25% increase over baseline. Rather it will stick out like a sore thumb when compared to the other cells in a string at a given point in time regardless of the age of all the cells in a string. In other words, if the battery is 10 years old and all the cells are gradually approaching a 25% increase in ohmic values over baseline, then you have a battery which is approaching end of life. You need to get ready to buy a new battery but you do not have to worry about an impending catastrophic failure. On the other hand, if the battery is five years old and you have one cell that has a markedly different ohmic reading than all the other cells, then you need to be worried that this cell is in thermal runaway and catastrophic failure is imminent.

If an entity elects to use a capacity test rather than a cell ohmic value trending program, this does not eliminate the need to be concerned about thermal runaway – the entity still needs to do the 6 month readings and look for cells which are outliers in the string but they need not trend results against the factory/as new baseline. Some entities will not mind the extra administrative burden of having the ongoing trending program against baseline - others would rather just do the capacity test and not have to trend the data against baseline. Nonetheless, all entities must look for ohmic outliers on a 6 month basis.

It is possible to accomplish both tasks listed (trend testing for capacity and testing for thermal runaway candidates) with the very same ohmic test. It becomes an analysis exercise of watching the trend from baselines and watching for the oblique cell measurement.

15.5 Associated communications equipment (Table 1-2)

The equipment used for tripping in a communications assisted trip scheme is a vital piece of the trip circuit. Remote action causing a local trip can be thought of as another parallel trip path to the trip coil that must be tested.

Besides the trip output and wiring to the trip coil(s) there is also a communications medium that must be maintained.
Newer technologies now exist that achieve communications-assisted tripping without the conventional wiring practices of older technology.

For example: older technologies may have included *Frequency Shift Key* methods. This technology requires that guard and trip levels be maintained.

The actual tripping path(s) to the trip coil(s) may be tested as a parallel trip path within the dc control circuitry tests.

Emerging technologies transfer digital information over a variety of carrier mediums that are then interpreted locally as trip signals.

The requirements apply to the communicated signal needed for the proper operation of the protective relay trip logic or scheme. Therefore this Standard is applied to equipment used to convey both trip signals (permissive or direct) and block signals.

It was the intent of this Standard to require that a test be performed on any communications-assisted trip scheme regardless of the vintage of technology.The essential element is that the tripping (or blocking) occurs locally when the remote action has been asserted; or that the tripping (or blocking) occurs remotely when the local action is asserted. Note that the required testing can still be done within the concept of testing by overlapping segments. Associated communications equipment can be (but is not limited to) testing at other times and different frequencies as the protective relays, the individual trip paths and the affected circuit interrupting devices.

Some newer installations utilize digital signals over fiber-optics from the protective relays in the control house to the circuit interrupting device in the yard. This method of tripping the circuit breaker, even though it might be considered communications, must be maintained per the dc control circuitry maintenance requirements.

15.5.1 Frequently Asked Questions:

What are some examples of mechanisms to check communications equipment functioning?
For unmonitored Protection Systems, various types of communications systems will have different facilities for on-site integrity checking to be performed at least every three months during a substation visit. Some examples are, but not limited to:

- On-off power-line carrier systems can be checked by performing a manual carrier keying test between the line terminals, or carrier check-back test from one terminal.
- Systems which use frequency-shift communications with a continuous guard signal (over a telephone circuit, analog microwave system, etc.) can be checked by observing for a loss-of-guard indication or alarm. For frequency-shift power-line carrier systems, the guard signal level meter can also be checked.
- Hard-wired pilot wire line Protection Systems typically have pilot-wire monitoring relays that give an alarm indication for a pilot wire ground or open pilot wire circuit loop.
- Digital communications systems typically have a data reception indicator or data error indicator (based on loss of signal, bit error rate, or frame error checking).

For monitored Protection Systems, various types of communications systems will have different facilities for monitoring the presence of the communications channel, and activating alarms that can be monitored remotely. Some examples are, but not limited to:

- On-off power-line carrier systems can be shown to be operational by automated periodic power-line carrier check-back tests, with remote alarming of failures.
- Systems which use a frequency-shift communications with a continuous guard signal (over a telephone circuit, analog microwave system, etc.) can be remotely monitored with a loss-of-guard alarm or low signal level alarm.
- Hard-wired pilot wire line Protection Systems can be monitored by remote alarming of pilot-wire monitoring relays.
- Digital communications systems can activate remotely monitored alarms for data reception loss or data error indications.
- Systems can be queried for the data error rates.

For the highest degree of monitoring of Protection Systems, the communications system must monitor all aspects of the performance and quality of the channel that show it meets the design performance criteria, including monitoring of the channel interface to protective relays.

- In many communications systems signal quality measurements including signal-to-noise ratio, received signal level, reflected transmitter power or standing wave ratio, propagation delay, and data error rates are compared to alarm limits. These alarms are connected for remote monitoring.
- Alarms for inadequate performance are remotely monitored at all times, and the alarm communications system to the remote monitoring site must itself be continuously monitored to assure that the actual alarm status at the communications equipment location is continuously being reflected at the remote monitoring site.

What is needed for the 3-month inspection of communications-assisted trip scheme equipment?

The 3-month inspection applies to unmonitored equipment. An example of compliance with this requirement might be, but is not limited to:

With each site visit, check that the equipment is free from alarms, check any metered signal levels, and that power is still applied. While this might be explicit for a particular type of equipment (i.e. FSK equipment), the concept should be that the entity verify that the communications equipment that is used in a Protection System is operable through a cursory inspection and site visit. This site visit can be eliminated on this particular example if the FSK equipment had a monitored alarm on Loss of Guard. Blocking carrier systems with auto checkbacks will present an alarm when the channel fails allowing a visual indication. With no auto checkback, the channel integrity will need to be verified by a manual checkback or a two ended signal check. This check could also be eliminated by bring the auto checkback failure alarm to the monitored central location.

Does a fiber optic I/O scheme used for breaker tripping or control within a station, for example - transmitting a trip signal or control logic between the control house and the breaker control cabinet, constitute a communications system?

This equipment is presently classified as being part of the Protection System Control Circuitry and tested per the portions of Table 1 applicable to Protection System Control Circuitry rather than those portions of the table applicable to communications equipment.

In Table 1-2, the Maintenance Activities section of the Protective System Communications Equipment and Channels refers to the quality of the channel meeting "performance criteria". What is meant by performance criteria?
Protection System communications channels must have a means of determining if the channel and communications equipment is operating normally. If the channel is not operating normally an alarm will be indicated. For unmonitored systems this alarm will probably be on the panel. For monitored systems, the alarm will be transmitted to a remote location.

Each entity will have established a nominal performance level for each protective system communications channel that is consistent with proper functioning of the Protection System. If that level of nominal performance is not being met, the system will go into alarm. Following are some examples of protective system communications channel performance measuring:

- For direct transfer trip using a frequency shift power line carrier channel, a guard level monitor is part of the equipment. A normal receive level is established when the system is calibrated and if the signal level drops below an established level, the system will indicate an alarm.
- An on-off blocking signal over power line carrier is used for directional comparison blocking schemes on transmission lines. During a fault, block logic is sent to the remote relays by turning on a local transmitter and sending the signal over the power line to a receiver at the remote end. This signal is normally off so continuous levels cannot be checked. These schemes use check-back testing to determine channel performance. A predetermined signal sequence is sent to the remote end and the remote end decodes this signal and sends a signal sequence back. If the sending end receives the correct information from the remote terminal, the test passes and no alarm is indicated. Full power and reduced power tests are typically run. Power levels for these tests are determined at the time of calibration.
- Pilot wire relay systems use a hardwire communications circuit to communicate between the local and remote ends of the protective zone. This circuit is monitored by circulating a dc current between the relay systems. A typical level may be 1 mA. If the level drops below the setting of the alarm monitor, the system will indicate an alarm.
- Modern digital relay systems use data communications to transmit relay information to the remote end relays. An example of this is a line current differential scheme commonly used on transmission lines. The protective relays communicate current magnitude and phase information over the communications path to determine if the fault is located in the protective zone. Quantities such as digital packet loss, bit error rate and channel delay are monitored to determine the quality of the channel. These limits are determined and

set during relay commissioning. Once set, any channel quality problems that fall outside the set levels will indicate an alarm.

The previous examples show how some protective relay communications channels can be monitored and how the channel performance can be compared to performance criteria established by the entity. This Standard does not state what the performance criteria will be; it just requires that the entity establish nominal criteria so protective system channel monitoring can be performed.

How is the performance criteria of Protection System communications equipment involved in the maintenance program?
An entity determines the acceptable performance criteria depending on the technology implemented. If the communications channel performance of a Protection System varies from the pre-determined performance criteria for that system then these results should be investigated and resolved.

How do I verify the A/D converters of microprocessor-based relays?
There are a variety of ways to do this. Two examples would be: using values gathered via data communications and automatically comparing these values with values from other sources, or using groupings of other measurements (such as vector summation of bus feeder currents) for comparison. Many other methods are possible.

15.6 Alarms (Table 2)

In addition to the tables of maintenance for the components of a Protection System, there is an additional table added for alarms. This additional table was added for clarity. This enabled the common alarm attributes to be consolidated into a single spot and thus make it easier to read the Tables 1-1 through 1-5. The alarms need to arrive at a site wherein a corrective action can be initiated. This could be a control room, operations center, etc. The alarming mechanism can be a Standard alarming system or an auto-polling system, the only requirement is that the alarm be brought to the action-site within 24 hours. This effectively makes manned-stations equivalent to monitored stations. The alarm of a monitored point (for example a monitored trip path with a lamp) in a manned-station now makes that monitored point eligible for monitored status. Obviously, these same rules apply to a non-manned-station, which is that if the monitored point has an alarm that is auto-reported to the operations center (for example) within 24 hours then it too is considered monitored.

15.6.1 Frequently Asked Question:

Why are there activities defined for varying degrees of monitoring a Protection System component when that level of technology may not yet be available?
There may already be some equipment available that is capable of meeting the highest levels of monitoring criteria listed in the Tables. However, even if there is no equipment available today that can meet this level of monitoring the Standard establishes the necessary requirements for when such equipment becomes available. By creating a roadmap for development, this provision makes the Standard technology-neutral. The Standard Drafting Team wants to avoid the need to

revise the Standard in a few years to accommodate technology advances that may be coming to the industry.

Does a fail-safe "form b" contact that is alarmed to a 24/7 operation center classify as an alarm path with monitoring?
If the fail-safe "form-b" contact that is alarmed to a 24/7 operation center causes the alarm to activate for failure of any portion of the alarming path from the alarm origin to the 24/7 operations center then this can be classified as an alarm path with monitoring.

15.7 Distributed UFLS and UVLS Systems (Table 3)

Distributed UFLS and UVLS Systems have their maintenance activities documented in Table 3 due to their distributed nature allowing reduced maintenance activities and extended maximum maintenance intervals. Relays have the same maintenance activities and intervals as Table 1-1. Voltage and current sensing devices have the same maintenance activity and interval as Table 1-2. DC systems need only have their voltage read at the relay every twelve years. Control circuits have the following maintenance activities every twelve years:

- Verify the trip path between the relay and lock-out and/or auxiliary tripping device(s).
- Verify operation of any lock-out and/or auxiliary tripping device(s) used in the trip circuit.
- No verification of trip path required between the lock-out and/or auxiliary tripping device(s).
- No verification of trip path required between the relay and trip coil for circuits that have no lock-out and/or auxiliary tripping device(s).
- No verification of trip coil required.

No maintenance activity is required for associated communication systems for distributed UFLS/UVLS schemes.

Non-BES interrupting devices that participate in a distributed UFLS or UVLS scheme are excluded from the tripping requirement, and part of the control circuit test requirement; however the part of the trip path control circuitry between the load shed relay and lock-out or auxiliary tripping relay must be tested at least once every 12 years. In the case where there is no lock-out or auxiliary tripping relay used in a distributed UFLS or UVLS scheme which is not part of the BES, there is no control circuit test requirement. There are many circuit interrupting devices in the distribution system that will be operating for any given under-frequency event that requires tripping for that event. A failure in the tripping-action of a single distributed system circuit breaker (or non-BES equipment interruption device) will be far less significant than, for example, any single Transmission Protection System failure such as a failure of a bus differential lock-out relay. While many failures of these distributed system circuit breakers (or non-BES equipment interruption device) could add up to be significant, it is also believed that many circuit breakers are operated often on just fault clearing duty and therefore these circuit breakers are operated at least as frequently as any requirements that appear in this Standard.

15.8 Examples of Evidence of Compliance

To comply with the requirements of this Standard an entity will have to document and save evidence. The evidence can be of many different forms. The Standard Drafting Team recognizes that there are concurrent evidence requirements of other NERC Standards that could, at times, fulfill evidence requirements of this Standard.

15.8.1 Frequently Asked Questions:

What forms of evidence are acceptable?

Acceptable forms of evidence, as relevant for the Requirement being documented, include but are not limited to:

- Process documents or plans
- Data (such as relay settings sheets, photos, SCADA, and test records)
- Database lists, records and/or screen shots that demonstrate compliance information
- Prints, diagrams and/or schematics
- Maintenance records
- Logs (operator, substation, and other types of log)
- Inspection forms
- Mail, memos, or email proving the required information was exchanged, coordinated, submitted or received
- Check-off forms (paper or electronic)
- Any record that demonstrates that the maintenance activity was known, accounted for, and/or performed.

If I replace a failed Protection System component with another component, what testing do I need to perform on the new component?
In order to reset the Table 1 maintenance interval for the replacement component, all relevant Table 1 activities for the component should be performed.

I have evidence to show compliance for PRC-016 ("Special Protection System Misoperation"). Can I also use it to show compliance for this Standard, PRC-005-2?
Maintaining evidence for operation of Special Protection Systems could concurrently be utilized as proof of the operation of the associated trip coil (provided one can be certain of the trip coil involved). Thus the reporting requirements that one may have to do for the Misoperation of a Special Protection Scheme under PRC-016 could work for the activity tracking requirements under this PRC-005-2.

I maintain disturbance records which show Protection System operations. Can I use these records to show compliance?
These records can be concurrently utilized as dc trip path verifications to the degree that they demonstrate the proper function of that dc trip path.

I maintain test reports on some of my components of my Protection System components. Can I use these test reports to show that I have verified a maintenance activity?

Yes.

16. References

1. Protection System Maintenance: A Technical Reference. Prepared by the System Protection and Controls Task Force of the NERC Planning Committee. Dated September 13, 2007.

2. "Predicating The Optimum Routine test Interval For Protection Relays," by J. J. Kumm, M.S. Weber, D. Hou, and E. O. Schweitzer, III, IEEE Transactions on Power Delivery, Vol. 10, No. 2, April 1995.

3. "Transmission Relay System Performance Comparison For 2000, 2001, 2002, 2003, 2004 and 2005," Working Group I17 of Power System Relaying Committee of IEEE Power Engineering Society, May 2006.

4. "A Survey of Relaying Test Practices," Special Report by WG I11 of Power System Relaying Committee of IEEE Power Engineering Society, September 16, 1999.

5. "Transmission Protective Relay System Performance Measuring Methodology," Working Group I3 of Power System Relaying Committee of IEEE Power Engineering Society, January 2002.

6. "Processes, Issues, Trends and Quality Control of Relay Settings," Working Group C3 of Power System Relaying Committee of IEEE Power Engineering Society, December 2006.

7. "Proposed Statistical Performance Measures for Microprocessor-Based Transmission-Line Protective Relays, Part I - Explanation of the Statistics, and Part II - Collection and Uses of Data," Working Group D5 of Power System Relaying Committee of IEEE Power Engineering Society, May 1995; Papers 96WM 016-6 PWRD and 96WM 127-1 PWRD, 1996 IEEE Power Engineering Society Winter Meeting.

8. "Analysis And Guidelines For Testing Numerical Protection Schemes," Final Report of CIGRE WG 34.10, August 2000.

9. "Use of Preventative Maintenance and System Performance Data to Optimize Scheduled Maintenance Intervals," H. Anderson, R. Loughlin, and J. Zipp, Georgia Tech Protective Relay Conference, May 1996.

PSMT SDT References

10. "Essentials of Statistics for Business and Economics" Anderson, Sweeney, Williams, 2003

11. "Introduction to Statistics and Data Analysis" - Second Edition, Peck, Olson, Devore, 2005

12. "Statistical Analysis for Business Decisions" Peters, Summers, 1968

Figures

Figure 1: Typical Transmission System

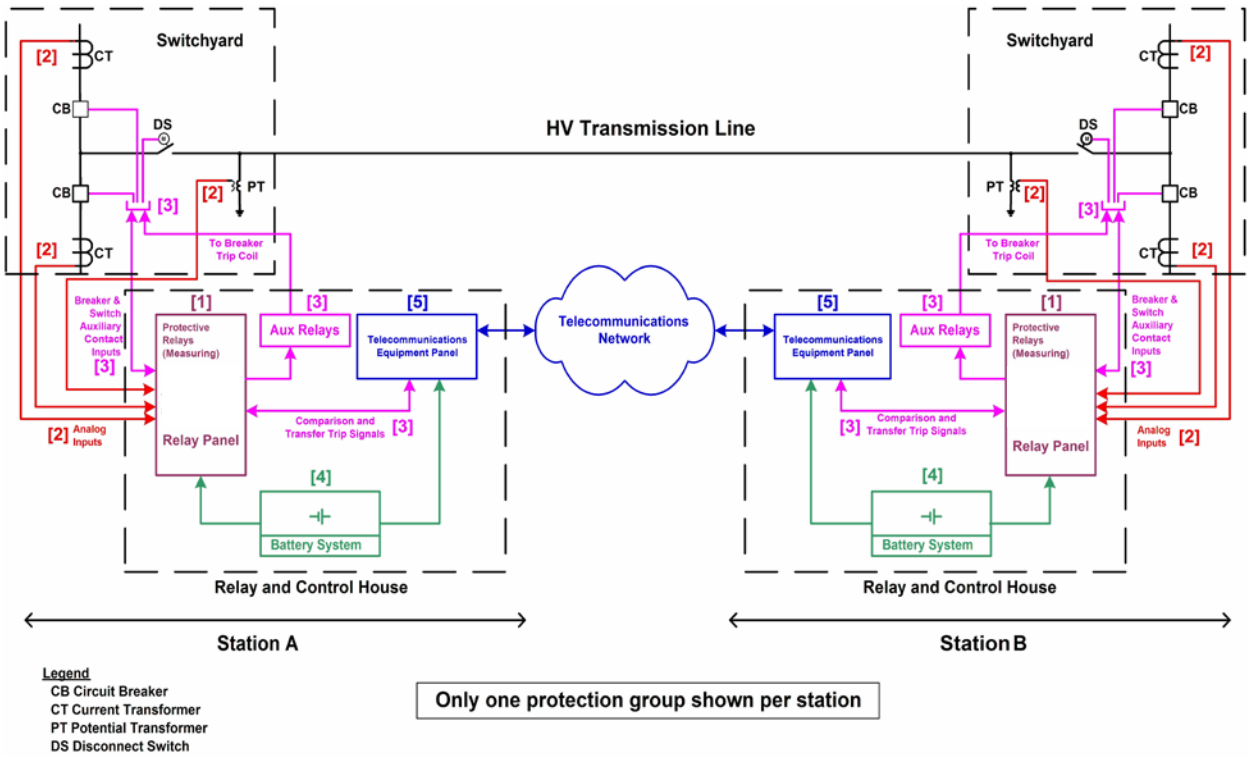

For information on components, see ***Figure 1 & 2 Legend – Components of Protection Systems***

Figure 2: Typical Generation System

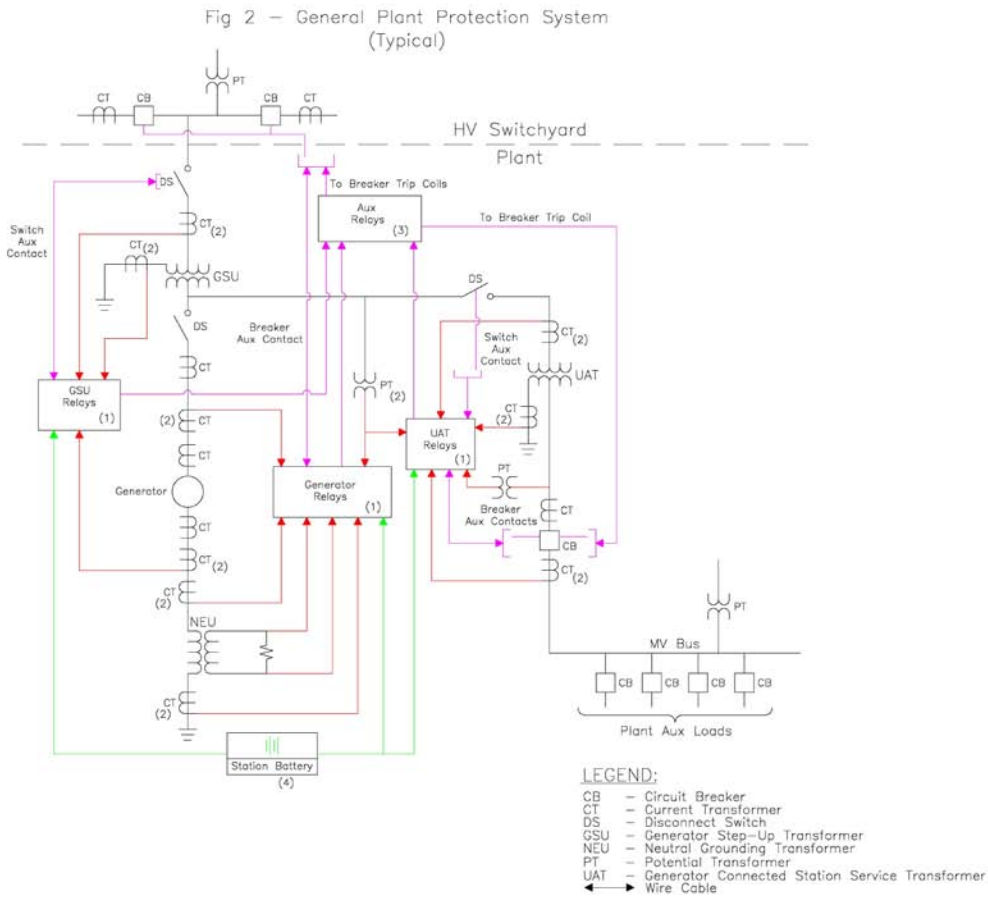

For information on components, see ***Figure 1 & 2 Legend – Components of Protection Systems***

Figure 1 & 2 Legend – Components of Protection Systems

Number in Figure	Component of Protection System	Includes	Excludes
1	Protective relays which respond to electrical quantities	All protective relays that use current and/or voltage inputs from current & voltage sensors and that trip the 86, 94 or trip coil.	Devices that use non-electrical methods of operation including thermal, pressure, gas accumulation, and vibration. Any ancillary equipment not specified in the definition of Protection Systems. Control and/or monitoring equipment that is not a part of the automatic tripping action of the Protection System
2	Voltage and current sensing devices providing inputs to protective relays	The signals from the voltage & current sensing devices to the protective relay input.	Voltage & current sensing devices that are not a part of the Protection System, including sync-check systems, metering systems and data acquisition systems.
3	Control circuitry associated with protective functions	All control wiring (or other medium for conveying trip signals) associated with the tripping action of 86 devices, 94 devices or trip coils (from all parallel trip paths). This would include fiber-optic systems that carry a trip signal as well as hard-wired systems that carry trip current.	Closing circuits, SCADA circuits, other devices in control scheme not passing trip current
4	Station dc supply	Batteries and battery chargers and any control power system which has the function of supplying power to the protective relays, associated trip circuits and trip coils.	Any power supplies that are not used to power protective relays or their associated trip circuits and trip coils.
5	Communications systems necessary for correct operation of protective functions	Tele-protection equipment used to convey specific information, in the form of analog or digital signals, necessary for the correct operation of protective functions.	Any communications equipment that is not used to convey information necessary for the correct operation of protective functions.

Additional information can be found in References

Appendix A

The following illustrates the concept of overlapping verifications and tests as summarized in Section 10 of the paper. As an example, Figure A-1 shows protection for a critical transmission line by carrier blocking directional comparison pilot relaying. The goal is to verify the ability of the entire two-terminal pilot protection scheme to protect for line faults, and to avoid over-tripping for faults external to the transmission line zone of protection bounded by the current transformer locations.

Figure A-1

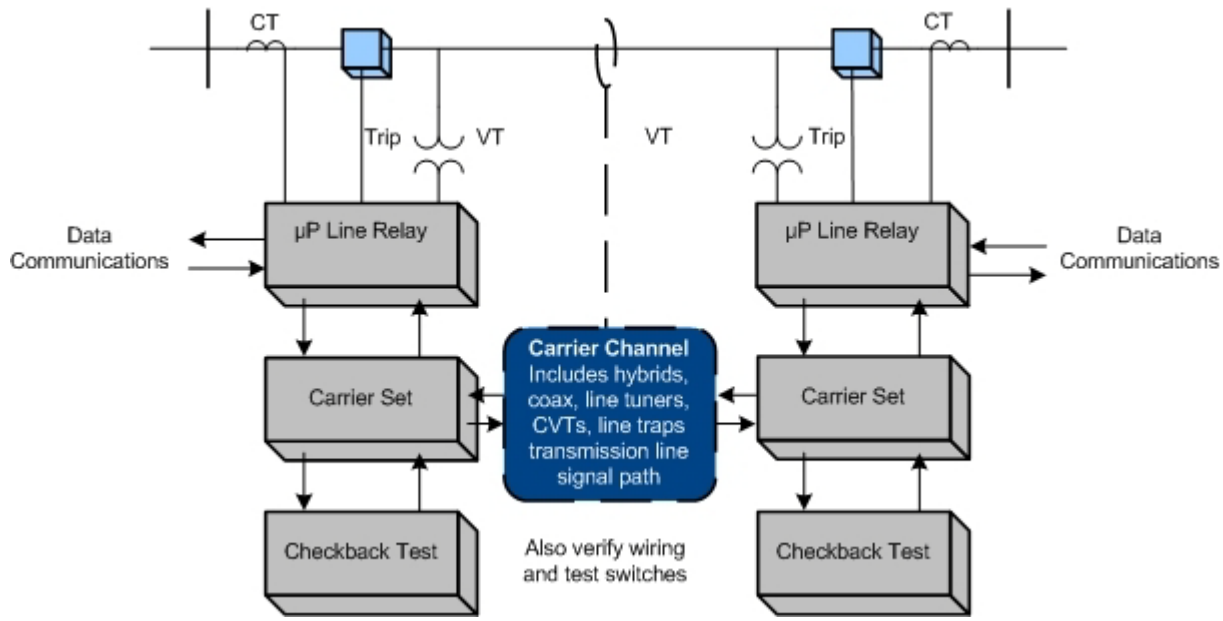

In this example (Figure A1), verification takes advantage of the self-monitoring features of microprocessor multifunction line relays at each end of the line. For each of the line relays themselves, the example assumes that the user has the following arrangements in place:

1. The relay has a data communications port that can be accessed from remote locations.
2. The relay has internal self-monitoring programs and functions that report failures of internal electronics, via communications messages or alarm contacts to SCADA.
3. The relays report loss of dc power, and the relays themselves or external monitors report the state of the dc battery supply.
4. The CT and PT inputs to the relays are used for continuous calculation of metered values of volts, amperes, plus Watts and VARs on the line. These metered values are reported by data communications. For maintenance, the user elects to compare these readings to those of other relays, meters, or DFRs. The other readings may be from redundant relaying or measurement systems or they may be derived from values in other protection zones. Comparison with other such readings to within required relaying accuracy verifies Voltage & Current Sensing Devices, wiring, and analog signal input processing of the relays. One effective way to do this is to utilize the

relay metered values directly in SCADA, where they can be compared with other references or state estimator values.

5. Breaker status indication from auxiliary contacts is verified in the same way as in (2). Status indications must be consistent with the flow or absence of current.
6. Continuity of the breaker trip circuit from dc bus through the trip coil is monitored by the relay and reported via communications.
7. Correct operation of the on-off carrier channel is also critical to security of the Protection System, so each carrier set has a connected or integrated automatic checkback test unit. The automatic checkback test runs several times a day. Newer carrier sets with integrated checkback testing check for received signal level and report abnormal channel attenuation or noise, even if the problem is not severe enough to completely disable the channel.

These monitoring activities plus the check-back test comprise automatic verification of all the Protection System elements that experience tells us are the most prone to fail. But, does this comprise a complete verification?

Figure A-2

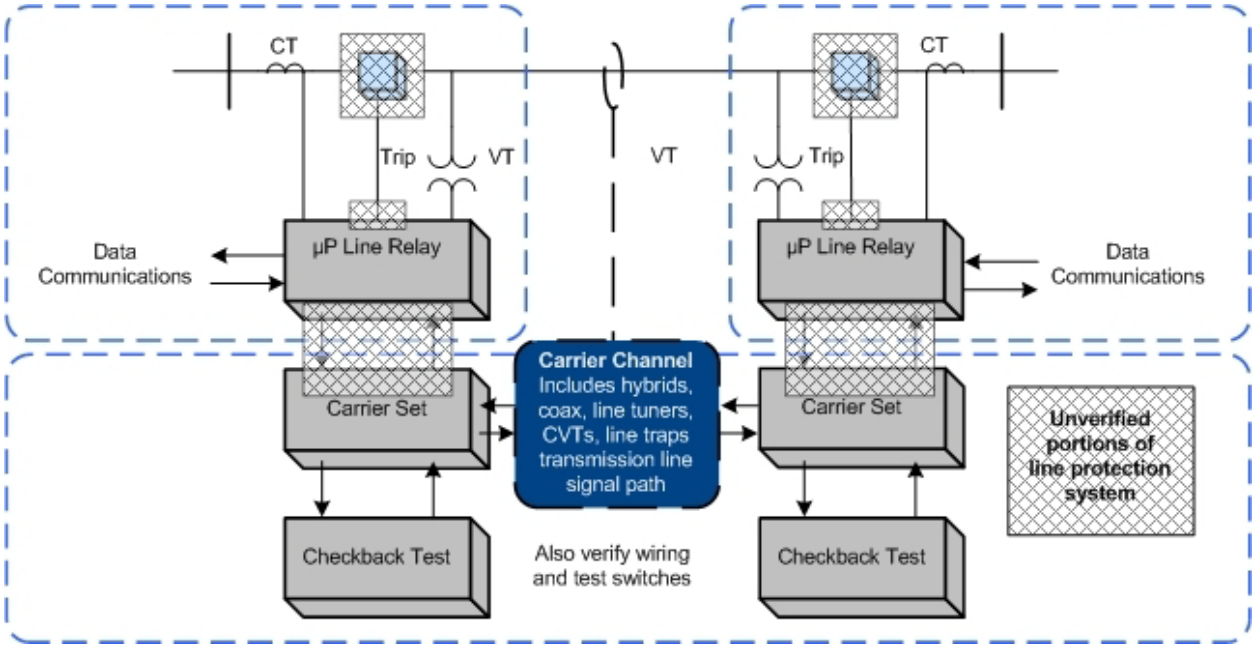

The dotted boxes of Figure A-2 show the sections of verification defined by the monitoring and verification practices just listed. These sections are not completely overlapping, and the shaded regions show elements that are not verified:

1. The continuity of trip coils is verified, but no means is provided for validating the ability of the circuit breaker to trip if the trip coil should be energized.
2. Within each line relay, all the microprocessors that participate in the trip decision have been verified by internal monitoring. However, the trip circuit is actually energized by the contacts of a small telephone-type "ice cube" relay within the line protective relay. The microprocessor energizes the coil of this ice cube relay through its output data port and a transistor driver circuit. There is no monitoring of the output port, driver circuit, ice cube relay, or contacts of that relay. These components are critical for tripping the circuit breaker for a fault.
3. The check-back test of the carrier channel does not verify the connections between the relaying microprocessor internal decision programs and the carrier transmitter keying circuit or the carrier receiver output state. These connections include microprocessor I/O ports, electronic driver circuits, wiring, and sometimes telephone-type auxiliary relays.
4. The correct states of breaker and disconnect switch auxiliary contacts are monitored, but this does not confirm that the state change indication is correct when the breaker or switch opens.

A practical solution for (1) and (2) is to observe actual breaker tripping, with a specified maximum time interval between trip tests. Clearing of naturally-occurring faults are demonstrations of operation that reset the time interval clock for testing of each breaker tripped in this way. If faults do not occur, manual tripping of the breaker through the relay trip output via data communications to the relay microprocessor meets the requirement for periodic testing.

PRC-005 does not address breaker maintenance, and its Protection System test requirements can be met by energizing the trip circuit in a test mode (breaker disconnected) through the relay microprocessor. This can be done via a front-panel button command to the relay logic, or application of a simulated fault with a relay test set. However, utilities have found that breakers often show problems during Protection System tests. It is recommended that Protection System verification include periodic testing of the actual tripping of connected circuit breakers.

Testing of the relay-carrier set interface in (3) requires that each relay key its transmitter, and that the other relay demonstrate reception of that blocking carrier. This can be observed from relay or DFR records during naturally occurring faults, or by a manual test. If the checkback test sequence were incorporated in the relay logic, the carrier sets and carrier channel are then included in the overlapping segments monitored by the two relays, and the monitoring gap is completely eliminated.

Appendix B — Protection System Maintenance Standard Drafting Team

Charles W. Rogers
Chairman
Consumers Energy Co.

John B. Anderson
Xcel Energy

Merle E. Ashton
Tri-State G&T

Corporation
Bob Bentert
Florida Power & Light Company

John Ciufo
Hydro One Inc

Sam Francis
Oncor

Carol A. Gerou
Midwest Reliability Organization

William D. Shultz
Southern Company Generation

Russell C. Hardison
Tennessee Valley Authority

David Harper
NRG Texas Maintenance Services

Mark Lucas
ComEd

Al McMeekin
NERC Staff
North American Electric Reliability

Mark Peterson
Great River Energy

Leonard Swanson, Jr
National Grid USA

Eric A. Udren
Quanta Technology

Philip B. Winston
Southern Company Transmission

John A. Zipp
ITC Holdings

NERC

NORTH AMERICAN ELECTRIC RELIABILITY CORPORATION

PRC-005-2 Protection System Maintenance

Supplementary Reference & FAQ

Draft

~~June 2~~July 29, 2011

Prepared by the

Protection System Maintenance and Testing Standard Drafting Team

116-390 Village Blvd., Princeton, NJ 08540
609.452.8060 | 609.452.9550 fax
www.nerc.com

Table of Contents

1. Introduction and Summary 4
2. Need for Verifying Protection System Performance 5
2.1 Existing NERC Standards for Protection System Maintenance and Testing 5
2.2 Protection System Definition 6
2.3 Applicability of New Protection System Maintenance Standards 6
2.3.1 Frequently Asked Questions: 7
2.4 Applicable Relays 8
2.4.1 Frequently Asked Questions: 9
3. Protection Systems Product Generations 10
4. Definitions 11
4.1 Frequently Asked Questions: 11
5. Time-Based Maintenance (TBM) Programs 13
5.1 Maintenance Practices 13
5.1.1 Frequently Asked Questions: 15
5.2 Extending Time-Based Maintenance 16
5.2.1 Frequently Asked Question: 17
6. Condition-Based Maintenance (CBM) Programs 18
6.1 Frequently Asked Questions: 19
7. Time-Based Versus Condition-Based Maintenance 20
7.1 Frequently Asked Questions: 20
8. Maximum Allowable Verification Intervals 25
8.1 Maintenance Tests 25
8.1.1 Table of Maximum Allowable Verification Intervals 25
8.1.2 Additional Notes for Tables 1-1 through 1-5 and Table 3 27
8.1.3 Frequently Asked Questions: 28
8.2 Retention of Records 33
8.2.1 Frequently Asked Questions: 34
8.3 Basis for Table 1 Intervals 36
8.4 Basis for Extended Maintenance Intervals for Microprocessor Relays 37
9. Performance-Based Maintenance Process 39
9.1 Minimum Sample Size 40
9.2 Frequently Asked Questions 42
10. Overlapping the Verification of Sections of the Protection System 54

10.1 Frequently Asked Question 55
11. Monitoring by Analysis of Fault Records 55
11.1 Frequently Asked Question 56
12. Importance of Relay Settings in Maintenance Programs 57
12.1 Frequently Asked Questions 58
13. Self-Monitoring Capabilities and Limitations 60
13.1 Frequently Asked Question 61
14. Notification of Protection System Failures 62
15. Maintenance Activities 63
15.1 Protective Relays (Table 1-1) 63
15.1.1 Frequently Asked Question 63
15.2 Voltage & Current Sensing Devices (Table 1-3) 64
15.2.1 Frequently Asked Questions 65
15.3 Control circuitry associated with protective functions (Table 1-5) 67
15.3.1 Frequently Asked Questions 68
15.4 Batteries and DC Supplies (Table 1-4) 69
15.4.1 Frequently Asked Questions 70
15.5 Associated communications equipment (Table 1-2) 81
15.5.1 Frequently Asked Questions 82
15.6 Alarms (Table 2) 85
15.6.1 Frequently Asked Question 86
15.7 Distributed UFLS and UVLS Systems (Table 3) 86
15.8 Examples of Evidence of Compliance 87
15.8.1 Frequently Asked Questions 87
16. References 89
Figures 90
Figure 1: Typical Transmission System 90
Figure 2: Typical Generation System 91
Appendix A 93
Appendix B — Protection System Maintenance Standard Drafting Team 96

This supplementary reference to PRC-005-2 is ~~not~~neither mandatory ~~and~~nor enforceable.

1. Introduction and Summary

NERC currently has four Reliability Standards that are mandatory and enforceable in the United States and address various aspects of maintenance and testing of Protection and Control systems. These standards are:

PRC-005-1 — *Transmission and Generation Protection System Maintenance and Testing*

PRC-008-0 — *Underfrequency Load Shedding Equipment Maintenance Programs*

PRC-011-0 — *UVLS System Maintenance and Testing*

PRC-017-0 — *Special Protection System Maintenance and Testing*

While these standards require that applicable entities have a maintenance program for Protection Systems, and that these entities must be able to demonstrate they are carrying out such a program, there are no specifics regarding the technical requirements for Protection System maintenance programs. Furthermore, FERC Order 693 directed additional modifications respective to Protection System maintenance programs. PRC-005-2 combines and replaces PRC-005, PRC-008, PRC-011 and PRC-017.

2. Need for Verifying Protection System Performance

Protective relays have been described as silent sentinels, and do not generally demonstrate their performance until a fault or other power system problem requires that they operate to protect power system elements, or even the entire Bulk Electric System (BES). Lacking faults, switching operations or system problems, the Protection Systems may not operate, beyond static operation, for extended periods. A misoperation - a false operation of a Protection System or a failure of the Protection System to operate, as designed, when needed - can result in equipment damage, personnel hazards, and wide area disturbances or unnecessary customer outages. Maintenance or testing programs are used to determine the performance and availability of Protection Systems.

Typically, utilities have tested Protection Systems at fixed time intervals, unless they had some incidental evidence that a particular Protection System was not behaving as expected. Testing practices vary widely across the industry. Testing has included system functionality, calibration of measuring devices, and correctness of settings. Typically, a Protection System must be visited at its installation site and, in many cases, removed from service for this testing.

Fundamentally, a Reliability Standard for Protection System Maintenance and Testing requires the performance of the maintenance activities that are necessary to detect and correct plausible age and service related degradation of the Protection System components such that a properly built and commissioned Protection System will continue to function as designed over its service life.

Similarly station batteries which are an important part of the station dc supply are not called upon to provide instantaneous dc power to the Protection System until power is required by the Protection System to operate circuit breakers or interrupting devices to clear faults or to isolate equipment.

2.1 Existing NERC Standards for Protection System Maintenance and Testing

For critical BES protection functions, NERC Standards have required that each utility or asset owner define a testing program. The starting point is the existing Standard PRC-005, briefly restated as follows:

Purpose: To document and implement programs for the maintenance of all Protection Systems affecting the reliability of the Bulk Electric System (BES) so that these Protection Systems are kept in working order.

PRC-005-1 is not specific on where the boundaries of the Protection Systems lie. However, the definition of Protection System in the NERC Glossary of Terms used in Reliability Standards indicates what must be included as a minimum.

At the beginning of the project to develop PRC-005-2, the definition of Protection System was:

Protective relays, associated communications systems, voltage and current sensing devices, station batteries and dc control circuitry.

Applicability: Owners of generation and transmission Protection Systems.

Requirements: The owner shall have a documented maintenance program with test intervals. The owner must keep records showing that the maintenance was performed at the specified intervals.

2.2 Protection System Definition

The most recently approved definition of Protection Systems is:

- Protective relays which respond to electrical quantities,
- communications systems necessary for correct operation of protective functions,
- voltage and current sensing devices providing inputs to protective relays,
- station dc supply associated with protective functions (including station batteries, battery chargers, and non-battery-based dc supply), and
- control circuitry associated with protective functions through the trip coil(s) of the circuit breakers or other interrupting devices.

2.3 Applicability of New Protection System Maintenance Standards

The BES purpose is to transfer bulk power. The applicability language has been changed from the original PRC-005:

"*...affecting the reliability of the Bulk Electric System (BES)…*"

To the present language:

"*…that are installed for the purpose of detecting faults on BES Elements (lines, buses, transformers, etc.).*"

The drafting team intends that this Standard will follow with any definition of the Bulk Electric System. There should be no ambiguity; if the element is a BES element then the Protection System protecting that element should then be included within this Standard. If there is regional variation to the definition then there will be a corresponding regional variation to the Protection Systems that fall under this Standard.

There is no way for the Standard Drafting Team to know whether a specific 230KV line, 115KV line (even 69KV line), for example, should be included or excluded. Therefore, the team set the clear intent that the Standard language should simply be applicable to relays for BES elements.

The BES is a NERC defined term that, from time to time, may undergo revisions. Additionally, there may even be regional variations that are allowed in the present and future definitions. See the NERC glossary of terms for the present, in-force, definition. See the applicable regional reliability organization for any applicable allowed variations.

While this Standard will undergo revisions in the future, this Standard will not attempt to keep up with revisions to the NERC definition of BES but rather simply make BES Protection Systems applicable.

The Standard is applied to Generator Owners (GO) and Transmission Owners (TO) because GO's and TO's have equipment that is BES equipment. The Standard brings in Distribution Providers (DP) because depending on the station configuration of a particular substation, there may be Protection System equipment installed at a non-transmission voltage level (Distribution Provider equipment) that is wholly or partially installed to protect the BES. PRC-005-2 would apply to this equipment. An example is underfrequency load-shedding, which is frequently applied well down into the distribution system to meet PRC-007-0.

As this Standard is intended to replace the existing PRC-005, PRC-008, PRC-011 and PRC-017, those Standards are used in the construction of this revision of PRC-005-1. Much of the original intent of those Standards was carried forward whenever it was possible to continue the intent without a disagreement with FERC Order 693. For example the original PRC-008 was constructed quite differently than the original PRC-005. The drafting team agrees with the intent of this and notes that distributed tripping schemes would have to exhibit multiple failures to trip before they would prove to be significant as opposed to a single failure to trip of, for example, a Transmission Protection System Bus Differential lock-out relay. While many failures of these distribution breakers could add up to be significant, it is also believed that distribution breakers are operated often on just fault clearing duty and therefore the distribution circuit breakers are operated at least as frequently as any requirements that might have appeared in this Standard.

Additionally, since this Standard will now replace PRC-011 it will be important to make the distinction between under-voltage Protection Systems that protect individual loads and Protection Systems that are UVLS schemes that protect the BES. Any UVLS scheme that had been applicable under PRC-011 will now be applicable under this revision of PRC-005-1. An example of an Under-Voltage Load Shedding scheme that is not applicable to this Standard is one in which the tripping action was intended to prevent low distribution voltage to a specific load from a transmission system that was intact except for the line that was out of service, as opposed to preventing a cascading outage or transmission system collapse.

It had been correctly noted that the devices needed for PRC-011 are the very same types of devices needed in PRC-005.

Thus a Standard written for Protection Systems of the BES can easily make the needed requirements for Protection Systems and replace some other Standards at the same time.

2.3.1 Frequently Asked Questions:

What, exactly, is the BES, or Bulk Electric System?
BES is the abbreviation for Bulk Electric System. BES is a term in the Glossary of Terms used in Reliability Standards, and is not being modified within this draft Standard.
NERC's approved definition of Bulk Electric System is:

As defined by the Regional Reliability Organization, the electrical generation resources, transmission lines, interconnections with neighboring systems, and associated equipment, generally operated at voltages of 100 kV or higher. Radial transmission facilities serving only load with one transmission source are generally not included in this definition.

Each Regional Entity implements a definition of the Bulk Electric System that is based on this NERC definition, in some cases, supplemented by additional criteria. These regional definitions have been documented and provided to FERC as part of a *June 14, 2007 Informational Filing*.

Why is Distribution Provider included within the Applicable Entities and as a responsible entity within several of the requirements? Wouldn't anyone having relevant facilities be a Transmission Owner?
Depending on the station configuration of a particular substation, there may be Protection System equipment installed at a non-transmission voltage level (Distribution Provider equipment) that is wholly or partially installed to protect the BES. PRC-005-2 would apply to this equipment. An example is underfrequency load-shedding, which is frequently applied well down into the distribution system to meet PRC-007-0.

We have an Under Voltage Load Shedding (UVLS) system in place that prevents one of our distribution substations from supplying extremely low voltage in the case of a specific transmission line outage. The transmission line is part of the BES. Does this mean that our UVLS system falls within this Standard?
The situation as stated indicates that the tripping action was intended to prevent low distribution voltage to a specific load from a transmission system that was intact except for the line that was out of service, as opposed to preventing cascading outage or transmission system collapse. This Standard is not applicable to this UVLS.

We have a UFLS or UVLS scheme that sheds the necessary load through distribution-side circuit breakers and circuit reclosers. Do the trip-test requirements for circuit breakers apply to our situation?
No. Distributed tripping schemes would have to exhibit multiple failures to trip before they would prove to be significant as opposed to a single failure to trip of, for example, a Transmission Protection System Bus Differential lock-out relay. While many failures of these distribution breakers could add up to be significant, it is also believed that distribution breakers are operated often on just fault clearing duty and therefore the distribution circuit breakers are operated at least as frequently as any requirements that might have appeared in this Standard.

We have a UFLS scheme that, in some locales, sheds the necessary load through non-BES circuit breakers and occasionally even circuit switchers. Do the trip-test requirements for circuit breakers apply to our situation?
If your "non-BES circuit breaker" has been brought into this standard by the inclusion of UFLS requirements and otherwise would not have been brought into this standard, then the answer is that there are no trip-test requirements. For these devices that are otherwise non-BES assets, these tripping schemes would have to exhibit multiple failures to trip before they would prove to be as significant as (for example) a single failure to trip of a Transmission Protection System Bus Differential lock-out relay.

2.4 Applicable Relays

The NERC Glossary definition has a Protection System including relays, dc supply, current and voltage sensing devices, dc control circuitry and associated communications circuits. The relays to which this Standard applies are those protective relays that respond to electrical quantities and provide a trip output to trip coils, dc control circuitry or associated communications equipment. This definition extends to IEEE device # 86 (lockout relay) and IEEE device # 94 (tripping or trip-free relay) as these devices are tripping relays that respond to the trip signal of the protective relay that processed the signals from the current and voltage sensing devices.

Relays that respond to non-electrical inputs or impulses (such as, but not limited to, vibration, pressure, seismic, thermal or gas accumulation) are not included.

2.4.1 Frequently Asked Questions:

Are power circuit reclosers, reclosing relays, closing circuits and auto-restoration schemes covered in this Standard?

No. As stated in Requirement R1, this Standard covers protective relays that use measurements of electrical quantities to determine anomalies and to trip a portion of the BES. Reclosers, reclosing relays, closing circuits and auto-restoration schemes are used to cause devices to close as opposed to electrical-measurement relays and their associated circuits that cause circuit interruption from the BES; such closing devices and schemes are more appropriately covered under other NERC Standards. There is one notable exception: if a Special Protection System incorporates automatic closing of breakers, the related closing devices are part of the SPS and must be tested accordingly.

I use my protective relays only as sources of metered quantities and breaker status for SCADA and EMS through a substation distributed RTU or data concentrator to the control center. What are the maintenance requirements for the relays?

This Standard addresses only devices "that are applied on, or are designed to provide protection for the BES." Protective relays, providing only the functions mentioned in the question, are not included.

Is a Sudden Pressure Relay an auxiliary tripping relay?

No. IEEE C37.2-2008 assigns the device number 94 to auxiliary tripping relays. Sudden pressure relays are assigned device number 63. Sudden pressure relays are excluded from the Standard because it does not utilize voltage and/or current measurements to determine anomalies. Devices that use anything other than electrical detection means are excluded.

My mechanical device does not operate electrically and does not have calibration settings; what maintenance activities apply?

You must conduct a test(s) to verify the integrity of the trip circuit. This Standard does not cover circuit breaker maintenance or transformer maintenance. The Standard also does not cover testing of devices such as sudden pressure relays (63), temperature relays (49), and other relays which respond to mechanical parameters rather than electrical parameters.

The Standard specifically mentions auxiliary and lock-out relays; what is an auxiliary tripping relay?
An auxiliary relay, IEEE Device Number 94, is described in IEEE Standard C37.2-2008 as "A device that functions to trip a circuit breaker, contactor, or equipment; to permit immediate tripping by other devices; or to prevent immediate reclosing of a circuit interrupter if it should open automatically, even though its closing circuit is maintained closed."

What is a lock-out relay?
A lock-out relay, IEEE Device Number 86, is described in IEEE Standard C37.2 as "A device that trips and maintains the associated equipment or devices inoperative until it is reset by an operator, either locally or remotely."

3. Protection Systems Product Generations

The likelihood of failure and the ability to observe the operational state of a critical Protection System, both depends on the technological generation of the relays as well as how long they have been in service. Unlike many other transmission asset groups, protection and control systems have seen dramatic technological changes spanning several generations. During the past 20 years, major functional advances are primarily due to the introduction of microprocessor technology for power system devices such as primary measuring relays, monitoring devices, control systems, and telecommunications equipment.

Modern microprocessor based relays have six significant traits that impact a maintenance strategy:

- Self monitoring capability - the processors can check themselves, peripheral circuits, and some connected substation inputs and outputs such as trip coil continuity. Most relay users are aware that these relays have self monitoring, but are not focusing on exactly what internal functions are actually being monitored. As explained further below, every element critical to the Protection System must be monitored, or else verified periodically.
- Ability to capture fault records showing how the Protection System responded to a fault in its zone of protection, or to a nearby fault for which it is required not to operate.
- Ability to meter currents and voltages, as well as status of connected circuit breakers, continuously during non-fault times. The relays can compute values such as MW and MVAR line flows that are sometimes used for operational purposes such as SCADA.
- Data communications via ports that provide remote access to all of the results of Protection System monitoring, recording, and measurement.
- Ability to trip or close circuit breakers and switches through the Protection System outputs, on command from remote data communications messages or from relay front panel button requests.

- Construction from electronic components some of which have shorter technical life or service life than electromechanical components of prior Protection System generations.

There have been significant advances in the technology behind the other components of Protection Systems. Microprocessors are now a part of Battery Chargers, Associated Communications Equipment, Voltage and Current Measuring Devices and even the control circuitry (in the form of software-latches replacing lock-out relays, etc).

Any Protection System component can have self-monitoring and alarming capability, not just relays. Because of this technology, extended time intervals can find their way into all components of the Protection System.

4. Definitions

Protection System Maintenance Program (PSMP) — An ongoing program by which Protection System components are kept in working order and proper operation of malfunctioning components is restored. A maintenance program for a specific component includes one or more of the following activities:

- Verify — Determine that the component is functioning correctly.
- Monitor — Observe the routine in-service operation of the component.
- Test — Apply signals to a component to observe functional performance or output behavior, or to diagnose problems.
- Inspect — Detect visible signs of component failure, reduced performance and degradation.
- Calibrate — Adjust the operating threshold or measurement accuracy of a measuring element to meet the intended performance requirement.
- Restore — Return malfunctioning components to proper operation.

4.1 Frequently Asked Questions:

Why does PRC-005-2 not specifically require maintenance and testing procedures as reflected in the previous Standard, PRC-005-1?

PRC-005-1 does not require detailed maintenance and testing procedures, but instead requires summaries of such procedures, and is not clear on what is actually required. PRC-005-2 requires a documented maintenance program, and is focused on establishing requirements rather than prescribing methodology to meet those requirements. Between the activities identified in the tables 1-1 through 1-5 and Table 2 (collectively the "Tables"), and the various components of the definition established for a "Protection System Maintenance Program", PRC-005-2 establishes the activities and time-basis for a Protection System Maintenance Program to a level of detail not previously required.

Please clarify what is meant by restore in the definition of maintenance.

The description of "Restore" in the definition of a Protection System Maintenance Program, addresses corrective activities necessary to assure that the component is returned to working order following the discovery of its failure or malfunction. The Maintenance Activities specified in the Tables do not present any requirements related to Restoration; R3 of the Standard does require that the entity "initiate resolution of any identified unresolved maintenance ~~correctable~~ issues". Some examples of restoration (or correction of maintenance-correctable issues) include, but are not limited to, replacement of capacitors in distance relays to bring them to working order; replacement of relays, or other Protection System components, to bring the Protection System to working order; upgrade of electromechanical or solid-state protective relays to micro-processor based relays following the discovery of failed components. Restoration, as used in this context is not to be confused with Restoration rules as used in system operations. Maintenance activity necessarily includes both the detection of problems and the repairs needed to eliminate those problems. This Standard does not identify all of the Protection System problems that must be detected and eliminated, rather it is the intent of this Standard that an entity determines the necessary working order for their various devices and keeps them in working order. If an equipment item is repaired or replaced then the entity can restart the maintenance-time-interval-clock if desired, however the replacement of equipment does not remove any documentation requirements that would have been required to verify compliance with time-interval requirements; in other words do not discard maintenance data that goes to verify your work.

The retention of documentation for new and/or replaced equipment is all about proving that the maintenance intervals had been in compliance. For example, a long range plan of upgrades might lead an entity to ignore required maintenance; retaining the evidence of prior maintenance that existed before any retirements and upgrades proves compliance with the Standard.

5. Time-Based Maintenance (TBM) Programs

Time-based maintenance is the process in which Protection Systems are maintained or verified according to a time schedule. The scheduled program often calls for technicians to travel to the physical site and perform a functional test on Protection System components. However, some components of a TBM program may be conducted from a remote location - for example, tripping a circuit breaker by communicating a trip command to a microprocessor relay to determine if the entire Protection System tripping chain is able to operate the breaker. Similarly, all Protection System components can have the ability to remotely conduct tests, either on-command or routinely, the running of these tests can extend the time interval between hands-on maintenance activities.

5.1 Maintenance Practices

Maintenance and testing programs often incorporate the following types of maintenance practices:

- TBM – time-based maintenance – externally prescribed maximum maintenance or testing intervals are applied for components or groups of components. The intervals may have been developed from prior experience or manufacturers' recommendations. The TBM verification interval is based on a variety of factors, including experience of the particular asset owner, collective experiences of several asset owners who are members of a country or regional council, etc. The maintenance intervals are fixed, and may range in number of months or in years.

  TBM can include review of recent power system events near the particular terminal. Operating records may verify that some portion of the Protection System has operated correctly since the last test occurred. If specific protection scheme components have demonstrated correct performance within specifications, the maintenance test time clock can be reset for those components.

- PBM – Performance-Based Maintenance - intervals are established based on analytical or historical results of TBM failure rates on a statistically significant population of similar components. Some level of TBM is generally followed. Statistical analyses accompanied by adjustments to maintenance intervals are used to justify continued use of PBM-developed extended intervals when test failures or in-service failures occur infrequently.

- CBM – condition-based maintenance – continuously or frequently reported results from non-disruptive self monitoring of components demonstrate operational status as those components remain in service. Whatever is verified by CBM does not require manual testing, but taking advantage of this requires precise technical focus on exactly what parts are included as part of the self diagnostics. While the term "Condition-Based-Maintenance" (CBM) is no longer used within the Standard itself, it is important to note that the concepts of CBM are a part of the Standard (in the form of extended time intervals through status-monitoring). These extended time intervals are only allowed (in the absence of PBM) if the condition of the device is monitored (CBM). As a consequence of the "monitored-basis-time-intervals" existing within the Standard the explanatory discussions within this Supplementary Reference concerned with CBM will remain in this reference and are discussed as CBM.

  Microprocessor based Protection System components that perform continuous self-monitoring verify correct operation of most components within the device. Self-monitoring capabilities may include battery continuity, float voltages, unintentional grounds, the ac signal inputs to a relay, analog measuring circuits, processors and memory for measurement, protection, and data communications, trip circuit monitoring, and protection or data communications signals (and many, many more measurements). For those conditions, failure of a self-monitoring routine generates an alarm and may inhibit operation to avoid false trips. When internal components, such as critical output relay contacts, are not equipped with self-monitoring, they can be manually tested. The method of testing may be local or remote, or through inherent performance of the scheme during a system event.

The TBM is the overarching maintenance process of which the other types are subsets. Unlike TBM, PBM intervals are adjusted based on good or bad experiences. The CBM verification intervals can be hours or even milliseconds between non-disruptive self monitoring checks within or around components as they remain in service.

TBM, PBM, and CBM can be combined for individual components, or within a complete Protection System. The following diagram illustrates the relationship between various types of maintenance practices described in this section. In the Venn diagram the overlapping regions show the relationship of TBM with PBM historical information and the inherent continuous monitoring offered through CBM.

This figure shows:

- Region 1: The TBM intervals that are increased based on known reported operational condition of individual components that are monitoring themselves.
- Region 2: The TBM intervals that are adjusted up or down based on results of analysis of maintenance history of statistically significant population of similar products that have been subject to TBM.
- Region 3: Optimal TBM intervals based on regions 1 and 2.

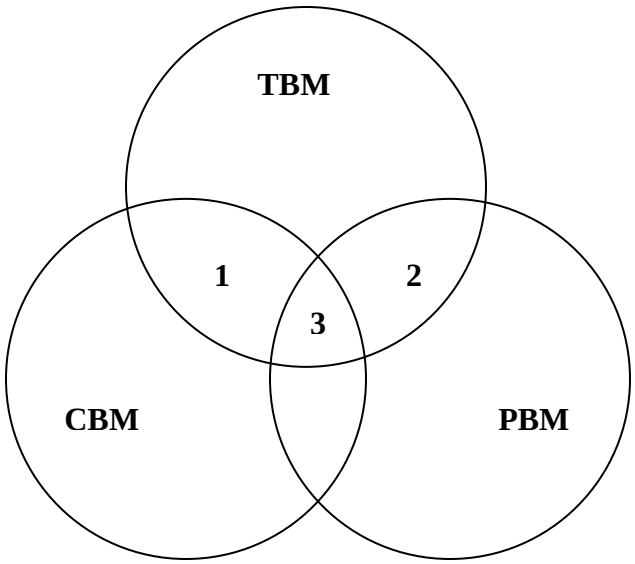

Relationship of time-based maintenance types

5.1.1 Frequently Asked Questions:

The Standard seems very complicated, and is difficult to understand. Can it be simplified?

Because the Standard is establishing parameters for condition-based Maintenance (R1) and Performance-Based Maintenance (R2) in addition to simple time-based Maintenance, it does appear to be complicated. At its simplest, an entity needs to ONLY perform time-based maintenance according to the unmonitored rows of the Tables. If an entity then wishes to take advantage of monitoring on its Protection System components and its available lengthened time intervals then it may, as long as the component has the listed monitoring attributes. If an entity wishes to use historical performance of its Protection System components to perform Performance-Based Maintenance, then R2 applies.

Please see the following diagram, which provides a "flow chart" of the Standard.

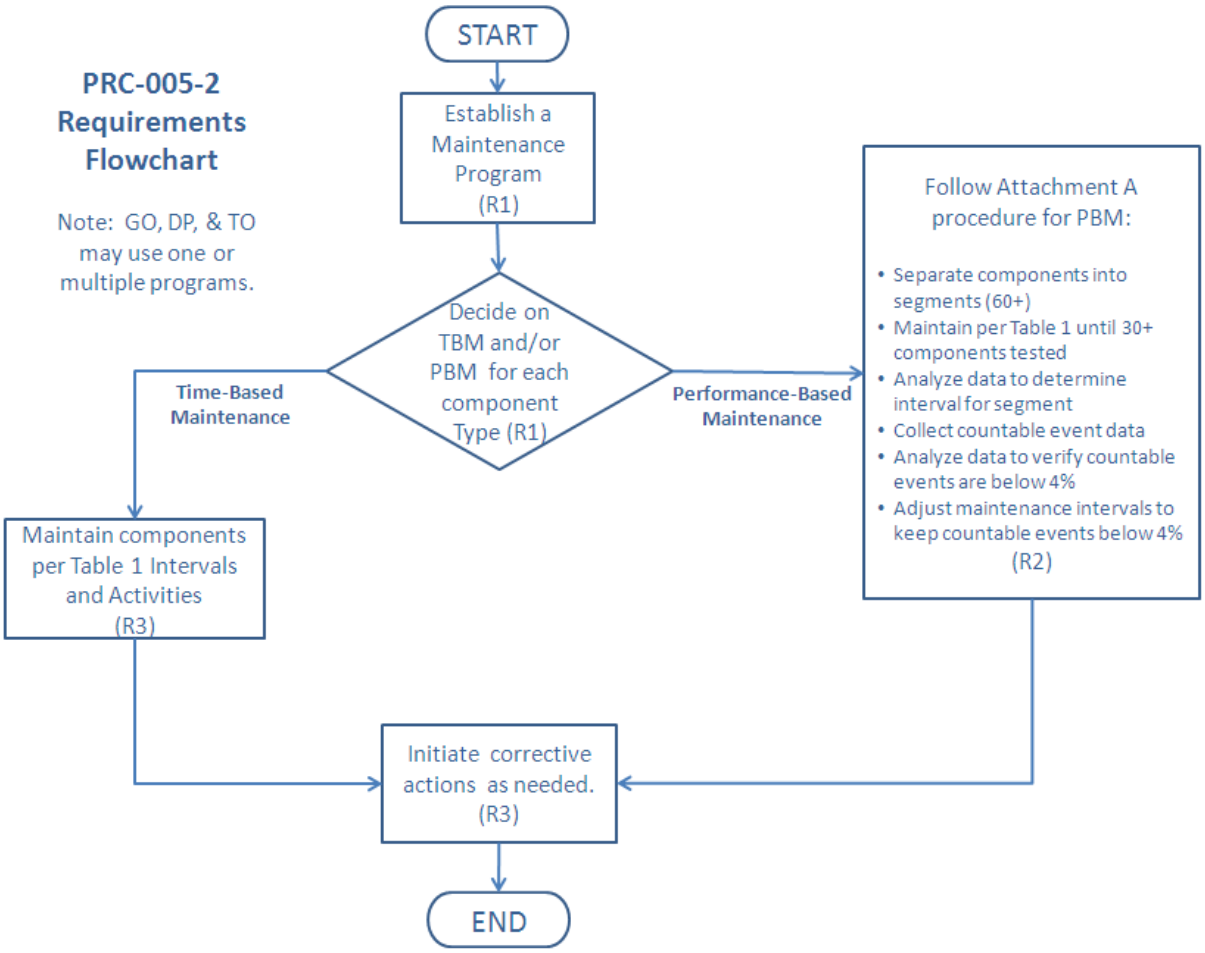

We have an electromechanical (unmonitored) relay that has a trip output to a lockout relay (unmonitored) which trips our transformer off-line by tripping the transformer's high-side and low-side circuit breakers. What testing must be done for this system?
This system is made up of components that are all unmonitored. Assuming a time-based Protection System maintenance program schedule (as opposed to a Performance-Based maintenance program), each component must be maintained per the most frequent hands-on activities listed in the Tables 1-1 through 1-5.

5.2 Extending Time-Based Maintenance

All maintenance is fundamentally time-based. Default time-based intervals are commonly established to assure proper functioning of each component of the Protection System, when data on the reliability of the components is not available other than observations from time-based maintenance. The following factors may influence the established default intervals:

- If continuous indication of the functional condition of a component is available (from relays or chargers or any self monitoring device), then the intervals may be extended or

manual testing may be eliminated. This is referred to as condition-based maintenance or CBM. CBM is valid only for precisely the components subject to monitoring. In the case of microprocessor-based relays, self-monitoring may not include automated diagnostics of every component within a microprocessor.

- Previous maintenance history for a group of components of a common type may indicate that the maintenance intervals can be extended while still achieving the desired level of performance. This is referred to as Performance-Based Maintenance or PBM. It is also sometimes referred to as reliability-centered maintenance or RCM, but PBM is used in this document.
- Observed proper operation of a component may be regarded as a maintenance verification of the respective component or element in a microprocessor-based device. For such an observation, the maintenance interval may be reset only to the degree that can be verified by data available on the operation. For example, the trip of an electromechanical relay for a fault verifies the trip contact and trip path, but only through the relays in series that actually operated; one operation of this relay cannot verify correct calibration.

Excessive maintenance can actually decrease the reliability of the component or system. It is not unusual to cause failure of a component by removing it from service and restoring it. The improper application of test signals may cause failure of a component. For example, in electromechanical overcurrent relays, test currents have been known to destroy convolution springs.

In addition, maintenance usually takes the component out of service, during which time it is not able to perform its function. Cutout switch failures, or failure to restore switch position, commonly lead to protection failures.

5.2.1 Frequently Asked Question:

If I show the protective device out of service while it is being repaired then can I add it back as a new protective device when it returns? If not, my relay testing history would show that I was out of compliance for the last maintenance cycle.

The maintenance and testing requirements (R3) (in essence) state "…shall implement and follow its PSMP …" if not then actions must be initiated to correct the deviance. The type of corrective activity is not stated; however it could include repairs or replacements.

Your documentation requirements will increase, of course, to demonstrate that your device tested bad and had corrective actions initiated. Your regional entity could very well ask for documentation showing status of your corrective actions.

6. Condition-Based Maintenance (CBM) Programs

Condition-based maintenance is the process of gathering and monitoring the information available from modern microprocessor-based relays and other intelligent electronic devices (IEDs) that monitor Protection System elements. These devices generate monitoring information during normal operation, and the information can be assessed at a convenient location remote from the substation. The information from these relays and IEDs is divided into two basic types:

1. Information can come from background self-monitoring processes, programmed by the manufacturer, or by the user in device logic settings. The results are presented by alarm contacts or points, front panel indications, and by data communications messages.
2. Information can come from event logs, captured files, and/or oscillographic records for faults and disturbances, metered values, and binary input status reports. Some of these are available on the device front panel display, but may be available via data communications ports. Large files of fault information can only be retrieved via data communications. These results comprise a mass of data that must be further analyzed for evidence of the operational condition of the Protection System.

Using these two types of information, the user can develop an effective maintenance program carried out mostly from a central location remote from the substation. This approach offers the following advantages:

1. Non-invasive Maintenance: The system is kept in its normal operating state, without human intervention for checking. This reduces risk of damage, or risk of leaving the system in an inoperable state after a manual test. Experience has shown that keeping human hands away from equipment known to be working correctly enhances reliability.
2. Virtually Continuous Monitoring: CBM will report many hardware failure problems for repair within seconds or minutes of when they happen. This reduces the percentage of problems that are discovered through incorrect relaying performance. By contrast, a hardware failure discovered by TBM may have been there for much of the time interval between tests, and there is a good chance that some devices will show health problems by incorrect operation before being caught in the next test round. The frequent or continuous nature of CBM makes the effective verification interval far shorter than any required TBM maximum interval.

6.1 Frequently Asked Questions:

My microprocessor relays and dc circuit alarms are contained on relay panels in a 24-hour attended control room. Does this qualify as an extended time interval condition-based system?
Yes, provided the station attendant (plant operator, etc.) monitors the alarms and other indications (comparable to the monitoring attributes) and reports them within the given time limits that are stated in the criteria of the Tables.

When documenting the basis for inclusion of components into the appropriate levels of monitoring as per Requirement R1.4 of the Standard, is it necessary to provide this documentation about the device by listing of every component and the specific monitoring attributes of each device?
No. While maintaining this documentation on the device level would certainly be permissible, it is not necessary. Global statements can be made to document appropriate levels of monitoring for the entire population of a component type or portion thereof.

For example, it would be permissible to document the conclusion that all BES substation dc supply battery chargers are Monitored by stating the following within the program description:

> "All substation dc supply battery chargers are considered Monitored and subject to the rows for monitored equipment of Table 1-4 requirements as all substation dc supply battery chargers are equipped with dc voltage alarms and ground detection alarms that are sent to the manned control center."

Similarly, it would be acceptable to use a combination of a global statement and a device level list of exclusions. Example:

> "Except as noted below, all substation dc supply battery chargers are considered Monitored and subject to the rows for monitored equipment of Table 1-4 requirements as all substation dc supply battery chargers are equipped with dc voltage alarms and ground detection alarms that are sent to the manned control center. The dc supply battery chargers of Substation X, Substation Y, and Substation Z are considered Unmonitored and subject to the rows for unmonitored equipment in Table 1-4 requirements as they are not equipped with ground detection capability."

Regardless whether this documentation is provided by device listing of monitoring attributes, by global statements of the monitoring attributes of an entire population of component types, or by some combination of these methods, it should be noted that auditors may request supporting drawings or other documentation necessary to validate the inclusion of the device(s) within the appropriate level of monitoring. This supporting background information need not be maintained within the program document structure but should be retrievable if requested by an auditor.

7. Time-Based Versus Condition-Based Maintenance

Time-based and condition-based maintenance programs are both acceptable, if implemented according to technically sound requirements. Practical programs can employ a *combination of time-based and condition-based maintenance.* The Standard requirements introduce the concept of optionally using condition monitoring as a documented element of a maintenance program.

The Federal Energy Regulatory Commission (FERC), in its Order Number 693 Final Rule dated March 16, 2007 (18 CFR Part 40, Docket No. RM06-16-000) on Mandatory Reliability Standards for the Bulk-Power System, directed NERC to submit a modification to PRC-005-1 that includes a requirement that maintenance and testing of a Protection System must be carried out within a maximum allowable interval that is appropriate to the type of the Protection System and its impact on the reliability of the Bulk Power System. Accordingly, this Supplementary Reference Paper refers to the specific maximum allowable intervals in PRC-005-2. The defined time limits allow for longer time intervals if the maintained component is monitored.

A key feature of condition-based monitoring is that it effectively reduces the time delay between the moment of a protection failure and time the Protection System owner knows about it, for the monitored segments of the Protection System. In some cases, the verification is practically continuous - the time interval between verifications is minutes or seconds. Thus, technically sound, condition-based verification, meets the verification requirements of the FERC order even more effectively than the strictly time-based tests of the same system components.

The result is that:

This NERC Standard permits utilities to use a technically sound approach and to take advantage of remote monitoring, data analysis, and control capabilities of modern Protection Systems to reduce the need for periodic site visits and invasive testing of components by on-site technicians. This periodic testing must be conducted within the maximum time intervals specified in Tables 1-1 through 1-5 and Table 2 of PRC-005-2.

7.1 Frequently Asked Questions:

What is a Calendar Year?
Calendar Year - January 1 through December 31 of any year. As an example, if an event occurred on June 17, 2009 and is on a “One Calendar Year Interval”, the next event would have to occur on or before December 31, 2010.

Please provide an example of “3 Calendar Months”.
If a maintenance activity is described as being needed every 3 Calendar Months then it is performed in a (given) month and due again 3 months later. For example a battery bank is inspected in month number 1 then it is due again in month number 4. And specifically consider that you perform your battery inspection on January 3, 2010 then it must be inspected again before the end of April. Another example could be that a 3-month inspection was performed in January is due in April, but if performed in March (instead of April) would still be due three

months later therefore the activity is due again June. Basically every "3 Calendar Months" means to add 3 months from the last time the activity was performed.

Please provide an example of the unmonitored versus other levels of monitoring available?
An unmonitored Protection System has no monitoring and alarm circuits on the Protection System components. A Protection System component that has monitoring attributes but no alarm output connected is considered to be unmonitored.

A monitored Protection System or an individual monitored component of a Protection System has monitoring and alarm circuits on the Protection System components. The alarm circuits must alert, within 24 hours, a location wherein corrective action can be initiated. This location might be, but not limited to an Operations Center, Dispatch Office, Maintenance Center or even a portable SCADA system.

There can be a combination of monitored and unmonitored Protection Systems within any given scheme, substation or plant; there can also be a combination of monitored and unmonitored components within any given Protection System.

Example #1: A combination of monitored and unmonitored components within a given Protection System might be:

- A microprocessor relay with an internal alarm connected to SCADA to alert 24-hr staffed operations center; it has internal self diagnosis and alarming. (monitored)
- Instrumentation transformers, with no monitoring, connected as inputs to that relay. (unmonitored)
- A Vented Lead-Acid battery with a low voltage alarm for the station dc supply voltage and an unintentional grounds detection alarm connected to SCADA. (monitoring varies)
- A circuit breaker with a trip coil and the trip circuit is not monitored. (unmonitored)

Given the particular components and conditions, and using Table 1 and Table 2 , the particular components have maximum activity intervals of:

Every 3 calendar months, verify:

- Electrolyte level (station dc supply voltage and unintentional ground detection is being maintained more frequently by the monitoring system).

Every 18 calendar months, verify/inspect the following:

- Battery bank ohmic values to station battery baseline (if performance tests are not opted)
- Battery charger float voltage
- Battery rack integrity
- Cell condition of all individual battery cells (where visible)
- Battery continuity
- Battery terminal connection resistance

- Battery cell-to-cell resistance (where available to measure)

Every 6 calendar years, perform/verify the following:

- Battery performance test (if ohmic tests are not opted)
- Verify that each trip coil is able to operate the circuit breaker, interrupting device, or mitigating device
- For electromechanical lock-out relays and auxiliary relays, electrical operation of electromechanical trip and auxiliary devices

Every 12 calendar years, verify the following:

- Microprocessor relay settings are as specified
- Operation of the microprocessor's relay inputs and outputs that are essential to proper functioning of the Protection System
- Acceptable measurement of power system input values seen by the microprocessor protective relay
- Verify that current and voltage signal values are provided to the protective relays
- Protection System component monitoring for the battery system signals are conveyed to a location where corrective action can be initiated
- The microprocessor relay alarm signals are conveyed to a location where corrective action can be initiated
- Verify all trip paths in the control circuitry associated with protective functions through the trip coil(s) of the circuit breakers or other interrupting devices

Example #2: A combination of monitored and unmonitored components within a given Protection System might be:

- A microprocessor relay with integral alarm that is not connected to SCADA. (unmonitored)
- Current and voltage signal values, with no monitoring, connected as inputs to that relay. (unmonitored)
- A Vented Lead-Acid battery with a low voltage alarm for the station dc supply voltage and an unintentional grounds detection alarm connected to SCADA. (monitoring varies)
- A circuit breaker with a trip coil, with no circuits monitored. (unmonitored)

Given the particular components and conditions, and using the Table 1 ("Maximum Allowable Testing Intervals and Maintenance Activities") and Table 2 ("Alarming Paths and Monitoring"), the particular components have maximum activity intervals of:

Every 3 calendar months, verify:

- Electrolyte level (Station dc supply voltage and unintentional ground detection is being maintained more frequently by the monitoring system)

Every 18 calendar months, verify/inspect the following:

- Battery bank ohmic values to station battery baseline (if performance tests are not opted)
- Battery charger float voltage
- Battery rack integrity
- Cell condition of all individual battery cells (where visible)
- Battery continuity
- Battery terminal connection resistance
- Battery cell-to-cell resistance (where available to measure)

Every 6 calendar years, verify/perform the following:

- Verify operation of the relay inputs and outputs that are essential to proper functioning of the Protection System
- Verify acceptable measurement of power system input values as seen by the relays
- Verify that each trip coil is able to operate the circuit breaker, interrupting device, or mitigating device
- For electromechanical lock-out relays and auxiliary relays, electrical operation of electromechanical trip and auxiliary devices
- Battery performance test (if ohmic tests are not opted)

Every 12 calendar years, verify the following:

- Verify that current and voltage signal values are provided to the protective relays
- Verify that Protection System component monitoring for the battery system signals are conveyed to a location where corrective action can be initiated
- Verify all trip paths in the control circuitry associated with protective functions through the trip coil(s) of the circuit breakers or other interrupting devices **Example #3:** A combination of monitored and unmonitored components within a given Protection System might be:
    - A microprocessor relay with alarm connected to SCADA to alert 24-hr staffed operations center; it has internal self diagnosis and alarms. (monitored)
    - Current and voltage signal values, with monitoring, connected as inputs to that relay (monitored)
    - Vented Lead-Acid battery without any alarms connected to SCADA (unmonitored)
    - Circuit breaker with a trip coil, with no circuits monitored (unmonitored)

Given the particular components, conditions, and using the Table 1 ("Maximum Allowable Testing Intervals and Maintenance Activities") and Table 2 ("Alarming Paths and Monitoring"), the particular components shall have maximum activity intervals of:

Every 3 calendar months, verify/inspect the following:

- Station dc supply voltage
- For unintentional grounds
- Electrolyte level

Every 18 calendar months, verify/inspect the following:

- Battery bank ohmic values to station battery baseline (if performance tests are not opted)
- Battery charger float voltage
- Battery rack integrity
- Battery continuity
- Battery terminal connection resistance
- Battery cell-to-cell resistance (where available to measure)
- Cell condition of all individual battery cells (where visible)

Every 6 calendar years, perform/verify the following:

- Battery performance test (if ohmic tests are not opted)
- Verify that each trip coil is able to operate the circuit breaker, interrupting device, or mitigating device
- For electromechanical lock-out relays and auxiliary relays, electrical operation of electromechanical trip and auxiliary devices

Every 12 calendar years, verify the following:

- The microprocessor relay alarm signals are conveyed to a location where corrective action can be taken
- Microprocessor relay settings are as specified
- Operation of the microprocessor's relay inputs and outputs that are essential to proper functioning of the Protection System
- Acceptable measurement of power system input values seen by the microprocessor protective relay
- Verify all trip paths in the control circuitry associated with protective functions through the trip coil(s) of the circuit breakers or other interrupting devices

Why do components have different maintenance activities and intervals if they are monitored?

The intent behind different activities and intervals for monitored equipment is to allow less frequent manual intervention when more information is known about the condition of Protection System components. Condition-Based Maintenance is a valuable asset to improve reliability.

Can all components in a Protection System be monitored?

No. For some components in a Protection System, monitoring will not be relevant. For example a battery will always need some kind of inspection.

We have a 30 year old oil circuit breaker with a red indicating lamp on the substation relay panel that is illuminated only if there is continuity through the breaker trip coil. There is no SCADA monitor or relay monitor of this trip coil. The line protection relay package that trips this circuit breaker is a microprocessor relay that has an integral alarm relay that will assert on a number of conditions that includes a loss of power to the relay. This alarm contact connects to our SCADA system and alerts our 24-hour operations center of relay trouble when the alarm contact closes. This microprocessor relay trips the circuit breaker only and does not monitor trip coil continuity or other things such as trip current. Are the components monitored or not? How often must I perform maintenance?

The protective relay is monitored and can be maintained every 12 years or when a unresolved maintenance ~~correctable~~ issue arises. The control circuitry can be maintained every 12 years. The trip coil(s) has to be electrically operated at least once every 6 years.

8. Maximum Allowable Verification Intervals

The Maximum Allowable Testing Intervals and Maintenance Activities show how CBM with newer device types can reduce the need for many of the tests and site visits that older Protection System components require. As explained below, there are some sections of the Protection System that monitoring or data analysis may not verify. Verifying these sections of the Protection Systems requires some persistent TBM activity in the maintenance program. However, some of this TBM can be carried out remotely - for example, exercising a circuit breaker through the relay tripping circuits using the relay remote control capabilities can be used to verify function of one tripping path and proper trip coil operation, if there has been no fault or routine operation to demonstrate performance of relay tripping circuits.

8.1 Maintenance Tests

Periodic maintenance testing is performed to ensure that the protection and control system is operating correctly after a time period of field installation. These tests may be used to ensure that individual components are still operating within acceptable performance parameters - this type of test is needed for components susceptible to degraded or changing characteristics due to aging and wear. Full system performance tests may be used to confirm that the total Protection System functions from measurement of power system values, to properly identifying fault characteristics, to the operation of the interrupting devices.

8.1.1 Table of Maximum Allowable Verification Intervals

Table 1 (collectively known as Table 1, individually called out as Tables 1-1 through 1-5), in the Standard, specifies maximum allowable verification intervals for various generations of Protection Systems and categories of equipment that comprise Protection Systems. The right column indicates maintenance activities required for each category.

The types of components are illustrated in Figures 1 and 2 at the end of this paper. Figure 1 shows an example of telecommunications-assisted line Protection System comprising substation equipment at each terminal and a telecommunications channel for relaying between the two substations. Figure 2 shows an example of a Generation station layout. The various subsystems of a Protection System that need to be verified are shown.

Non-distributed UFLS, UVLS, and SPS are additional categories of Table 1 that are not illustrated in these figures. Non-distributed UFLS, UVLS and SPS all use identical equipment as Protection Systems in the performance of their functions and therefore have the same maintenance needs.

Distributed UFLS and UVLS systems, which use local sensing on the distribution system and trip co-located non-BES interrupting devices, are addressed in Table 3 with reduced maintenance activities.

While it is easy to associate protective relays to multiple levels of monitoring, it is also true that most of the components that can make up a Protection System can also have technological advancements that place them into higher levels of monitoring.

To use the Maintenance Activities and Intervals Tables from PRC-005-2:

- First find the Table associated with your component. The tables are arranged in the order of mention in the definition of Protection System;
    - Table 1-1 is for protective relays,
    - Table 1-2 is for the associated communications systems,
    - Table 1-3 is for current and voltage sensing devices,
    - Table 1-4 is for station dc supply and
    - Table 1-5 is for control circuits. There is an additional table,
    - Table 2, which brings alarms into the maintenance arena; this was broken out to simplify the other tables.
    - Table 3 presents the maintenance activities and intervals for protective relays, current and voltage sensing devices, station dc supply, and control circuitry for distributed UFLS and UVLS systems.
- Next look within that table for your device and its degree of monitoring. The tables have different hands-on maintenance activities prescribed depending upon the degree to which you monitor your equipment. Find the maintenance activity that applies to the monitoring level that you have on your piece of equipment.
- This Maintenance activity is the minimum maintenance activity that must be documented.
- If your PSMP (plan) requires more activities then you must perform and document to this higher standard.
- After the maintenance activity is known, check the Maximum Maintenance Interval; this time is the maximum time allowed between hands-on maintenance activity cycles of this component.

- If your PSMP (plan) requires activities more often than the Tables maximum then you must perform and document those activities to your more stringent standard.
- Any given component of a Protection System can be determined to have a degree of monitoring that may be different from another component within that same Protection System. For example, in a given Protection System it is possible for an entity to have a monitored protective relay and an unmonitored associated communications system; this combination would require hands-on maintenance activity on the relay at least once every 12 years and attention paid to the communications system as often as every 3 months.
- An entity does not have to utilize the extended time intervals made available by this use of condition-based monitoring. An easy choice to make is to simply utilize the unmonitored level of maintenance made available on each of the 5 Tables. While the maintenance activities resulting from this choice would require more maintenance man-hours, the maintenance requirements may be simpler to document and the resulting maintenance plans may be easier to create.

For each Protection System component, Table 1 shows maximum allowable testing intervals for the various degrees of monitoring. These degrees of monitoring, or levels, range from the legacy unmonitored through a system that is more comprehensively monitored.

It has been noted here that an entity may have a PSMP that is more stringent than PRC-005-2. There may be any number of reasons that an entity chooses a more stringent plan than the minimums prescribed within PRC-005-2, most notable of which is an entity using performance based maintenance methodology. (Another reason for having a more stringent plan than is required could be a regional entity could have more stringent requirements.) Regardless of the rationale behind an entity's more stringent plan, it is incumbent upon them to perform the activities, and perform them at the stated intervals, of the entity's PSMP. A quality PSMP will help assure system reliability and adhering to any given PSMP should be the goal.

8.1.2 Additional Notes for Tables 1-1 through 1-5 and Table 3

1. For electromechanical relays, adjustment is required to bring measurement accuracy within the tolerance needed by the asset owner. Microprocessor relays with no remote monitoring of alarm contacts, etc, are unmonitored relays and need to be verified within the Table interval as other unmonitored relays but may be verified as functional by means other than testing by simulated inputs.

2. Microprocessor relays typically are specified by manufacturers as not requiring calibration, but acceptable measurement of power system input values must be verified (verification of the Analog to Digital [A/D] converters) within the Table intervals. The integrity of the digital inputs and outputs that are used as protective functions must be verified within the Table intervals.

3. Any Phasor Measurement Unit (PMU) function whose output is used in a Protection System or SPS (as opposed to a monitoring task) must be verified as a component in a Protection System.

4. In addition to verifying the circuitry that supplies dc to the Protection System, the owner must maintain the station dc supply. The most widespread station dc supply is the station

battery and charger. Unlike most Protection System components physical inspection of station batteries for signs of component failure, reduced performance, and degradation are required to ensure that the station battery is reliable enough to deliver dc power when required. IEEE Standards 450, 1188, and 1106 for Vented Lead-Acid, Valve-Regulated Lead-Acid, and Nickel-Cadmium batteries, respectively (which are the most commonly used substation batteries on the NERC BES) have been developed as an important reference source of maintenance recommendations. The Protection System owner might use the applicable IEEE recommended practice which contains information and recommendations concerning the maintenance, testing and replacement of its substation battery. However, the methods prescribed in these IEEE recommendations cannot be specifically required because they do not apply to all battery applications.

5. Aggregated small entities might distribute the testing of the population of UFLS/UVLS systems, and large entities will usually maintain a portion of these systems in any given year. Additionally, if relatively small quantities of such systems do not perform properly, it will not affect the integrity of the overall program. Thus these distributed systems have decreased requirements as compared to other Protection Systems.
6. Voltage & Current Sensing Device circuit input connections to the Protection System relays can be verified by (but not limited to) comparison of measured values on live circuits or by using test currents and voltages on equipment out of service for maintenance. The verification process can be automated or manual. The values should be verified to be as expected, (phase value and phase relationships are both equally important to verify).
7. "End-to-end test" as used in this Supplementary Reference is any testing procedure that creates a remote input to the local communications-assisted trip scheme. While this can be interpreted as a GPS-type functional test it is not limited to testing via GPS. Any remote scheme manipulation that can cause action at the local trip path can be used to functionally-test the dc Control Circuitry. A documented real-time trip of any given trip path is acceptable in lieu of a functional trip test. It is possible, with sufficient monitoring, to be able to verify each and every parallel trip path that participated in any given dc Control Circuit trip. Or, another possible solution is that a single trip path from a single monitored relay can be verified to be the trip path that successfully tripped during a real-time operation. The variations are only limited by the degree of engineering and monitoring that an entity desires to pursue.
8. A/D verification may use relay front panel value displays, or values gathered via data communications. Groupings of other measurements (such as vector summation of bus feeder currents) can be used for comparison if calibration requirements assure acceptable measurement of power system input values.
9. Notes 1-8 attempt to describe some testing activities; they do not represent the only methods to achieve these activities but rather some possible methods. Technological advances, ingenuity and/or industry accepted techniques can all be used to satisfy maintenance activity requirements; the Standard is technology and method neutral in most cases.

8.1.3 Frequently Asked Questions:

What is meant by "Verify that settings are as specified" maintenance activity in Table 1-1?
Verification of settings is an activity directed mostly towards microprocessor based relays. For relay maintenance departments that choose to test microprocessor based relays in the same manner as electromechanical relays are tested, the testing process sometimes requires that some specific functions be disabled. Later tests might enable the functions previously disabled but perhaps still other functions or logic statements were then masked out. It is imperative that, when the relay is placed into service, the settings in the relay be the settings that were intended to be in that relay or as the Standard states "…settings are as specified."

Many of the microprocessor based relays available today have software tools which provide this functionality and generate reports for this purpose.

For evidence or documentation of this requirement a simple recorded acknowledgement that the settings were checked to be as specified is sufficient.

The drafting team was careful not to require "…that the relay settings be correct…" because it was believed that this might then place a burden of proof that the specified settings would result in the correct intended operation of the interrupting device. While that is a noble intention, the measurable proof of such a requirement is immense. The intent is that settings of the component be as specified at the conclusion of maintenance activities, whether those settings may have "drifted" since the prior maintenance or whether changes were made as part of the testing process.

Are electromechanical relays included in the "Verify that settings are as specified" maintenance activity in Table 1-1?
Verification of settings is an activity directed towards the application of protection related functions of microprocessor based relays. Electromechanical relays require calibration verification by voltage and/or current injection, and thus the settings are verified during calibration activity. In the example of a time-overcurrent relay, a minor deviation in time dial, versus the settings, may be acceptable as long as the relay calibration is within accepted tolerances at the injected current amplitudes. A major deviation may require further investigation, as it could indicate a problem with the relay or an incorrect relay style for the application.

The verification of phase current and voltage measurements by comparison to other quantities seems reasonable. How, though, can I verify residual or neutral currents, or 3V0 voltages, by comparison, when my system is closely balanced?
Since these inputs are verified at commissioning, maintenance verification requires ensuring that phase quantities are as expected and that 3IO and 3VO quantities appear equal to or close to 0. These quantities also may be verified by use of oscillographic records for connected microprocessor relays as recorded during system disturbances. Such records may compare to similar values recorded at other locations by other microprocessor relays for the same event, or compared to expected values (from short circuit studies) for known fault locations.

What does this Standard require for testing an auxiliary tripping relay?
Table 1 and Table 3 requires that a trip test must verify that the auxiliary tripping relay(s) and/or lockout relay(s) which are directly in a trip path from the protective relay to the interrupting

device trip coil operate(s) electrically. Auxiliary outputs not in a trip path (i.e. annunciation or DME input) are not required, by this Standard, to be checked.

Do I have to perform a full end-to-end test of a Special Protection System?
No. All portions of the SPS need to be maintained, and the portions must overlap, but the overall SPS does not need to have a single end-to-end test. In other words it may be tested in piecemeal fashion provided all of the pieces are verified.

What about SPS interfaces between different entities or owners?
As in all of the Protection System requirements, SPS segments can be tested individually thus minimizing the need to accommodate complex maintenance schedules.

What do I have to do if I am using a phasor measurement unit (PMU) as part of a Protection System or Special Protection System?
Any Phasor Measurement Unit (PMU) function whose output is used in a Protection System or Special Protection System (as opposed to a monitoring task) must be verified as a component in a Protection System.

How do I maintain a Special Protection System or relay sensing for ~~Centralized~~non-distributed UFLS or UVLS Systems?
Since components of the SPS, UFLS, ~~or~~and UVLS are the same types of components as those in Protection Systems then these components should be maintained like similar components used for other Protection System functions. In many cases the devices for SPS, UFLS and UVLS are also used for other protective functions. The same maintenance activities apply with the exception that distributed systems (UFLS and UVLS) have fewer dc supply and control circuitry maintenance activity requirements.
For the testing of the output action, verification may be by breaker tripping, but may be verified in overlapping segments. For example an SPS that trips a remote circuit breaker might be tested by testing the various parts of the scheme in overlapping segments. Another method is to document the real-time tripping of an SPS scheme should that occur. Forced trip tests of circuit breakers (etc) that are a part of distributed UFLS or UVLS schemes are not required.

The established maximum allowable intervals do not align well with the scheduled outages for my power plant. Can I extend the maintenance to the next scheduled outage following the established maximum interval?
No. You must complete your maintenance within the established maximum allowable intervals in order to be compliant. You will need to schedule your maintenance during available outages to complete your maintenance as required, even if it means that you may do protective relay maintenance more frequently than the maximum allowable intervals. The maintenance intervals were selected with typical plant outages, among other things, in mind.

If I am unable to complete the maintenance as required due to a major natural disaster (hurricane, earthquake, etc), how will this affect my compliance with this Standard.

The Sanction Guidelines of the North American Electric Reliability Corporation effective January 15, 2008 provides that the Compliance Monitor will consider extenuating circumstances when considering any sanctions.

What if my observed testing results show a high incidence of out-of-tolerance relays, or, even worse, I am experiencing numerous relay misoperations due to the relays being out-of-tolerance?

The established maximum time intervals are mandatory only as a not-to-exceed limitation. The establishment of a maximum is measurable. But, any entity can choose to test some or all of their Protection System components more frequently (or, to express it differently, exceed the minimum requirements of the Standard). Particularly, if you find that the maximum intervals in the Standard do not achieve your expected level of performance, it is understandable that you would maintain the related equipment more frequently. A high incidence of relay Misoperations is in no one's best interest. The BES and an entity's bottom line both suffer.

We believe that the ~~3~~4-month interval between inspections is unneccessary, why can we not perform these inspections twice per year?

The standard drafting team believes that routine monthly inspections are the norm. To align routine station inspections with other important inspections the ~~3~~4-month interval was chosen. In lieu of station visits many activities can be accomplished with automated monitoring and alarming.

Our maintenance plan calls for us to perform routine protective relay tests every 3 years; if we are unable to achieve this schedule but we are able to complete the procedures in less than the Maximum Time Interval then are we in or out of compliance?

You are out of compliance. You must maintain your equipment to your stated intervals within your maintenance plan. The protective relays (and any Protection System component) cannot be tested at intervals that are longer than the maximum allowable interval stated in the Tables and yet you must conform to your own maintenance plan. Therefore you should design your maintenance plan such that it is not in conflict with the Minimum Activities and the Maximum Intervals. You then must maintain your equipment according to your maintenance plan. You will end up being compliant with both the Standard and your own plan.

Please provide a sample list of devices or systems that must be verified in a generator, generator step-up transformer, and generator connected station auxiliary transformer to meet the requirements of this Maintenance Standard.

Examples of typical devices and systems that may directly trip the generator, or trip through a lockout relay may include but are not necessarily limited to:

- Fault protective functions, including distance functions, voltage-restrained overcurrent functions, or voltage-controlled overcurrent functions
- Loss-of-field relays
- Volts-per-hertz relays
- Negative sequence overcurrent relays

- Over voltage and under voltage protection relays
- Stator-ground relays
- Communications-based Protection Systems such as transfer-trip systems
- Generator differential relays
- Reverse power relays
- Frequency relays
- Out-of-step relays
- Inadvertent energization protection
- Breaker failure protection

For generator step up or generator-connected station auxiliary transformers, operation of any of the following associated protective relays frequently would result in a trip of the generating unit and, as such, would be included in the program:

- Transformer differential relays
- Neutral overcurrent relay
- Phase overcurrent relays

Relays which trip breakers serving station auxiliary loads such as pumps, fans, or fuel handling equipment, etc., need not be included in the program even if the loss of the those loads could result in a trip of the generating unit. Furthermore, relays which provide protection to secondary unit substation (SUS) or low switchgear transformers and relays protecting other downstream plant electrical distribution system components are not included in the scope of this program even if a trip of these devices might eventually result in a trip of the generating unit. For example, a thermal overcurrent trip on the motor of a coal-conveyor belt could eventually lead to the tripping of the generator, but it does not cause the trip.

In the case where a plant does not have a generator connected station service transformer such that it is normally fed from a system connected station service transformer, is it still the drafting team's intent to exclude the protection systems for these system connected auxiliary transformers from scope even when the loss of the normal (system connected) station service transformer will result in a trip of a BES generating facility?

The SDT does not intend that the system-connected station auxiliary transformers be included in the Applicability. The generator-connected station service transformers are often connected to the generator bus directly without an interposing breaker; thus, the Protection Systems on these transformers will trip the generator as discussed in 4.2.5.1.

What is meant by "verify operation of the relay inputs and outputs that are essential to proper functioning of the Protection System?"

Any input or output (of the relay) that "affects the tripping" of the breaker is included in the scope of I/O of the relay to be verified. By "affects the tripping" one needs to realize that

sometimes there are more Inputs and Outputs than simply the output to the trip coil. Many important protective functions include things like breaker fail initiation, zone timer initiation and sometimes even 52a/b contact inputs are needed for a protective relay to correctly operate.

Each input should be "picked up" or "turned on and off" and verified as changing state by the microprocessor of the relay. Each output should be "operated" or "closed and opened" from the microprocessor of the relay and the output should be verified to change state on the output terminals of the relay. One possible method of testing inputs of these relays is to "jumper" the needed dc voltage to the input and verify that the relay registered the change of state.

Electromechanical lock-out relays (86) and auxiliary tripping relays (94) (used to convey the tripping current to the trip coils) need to be electrically operated to prove the capability of the device to change state. These tests need to be accomplished at least every 6 years, unless PBM methodology is applied.

The contacts on the 86 or 94 that change state to pass on the trip current to a breaker trip coil need only be checked every twelve years with the control circuitry.

~~Other devices in the control circuitry that are used for other protective functions besides tripping (including, but not limited to, electromechanical breaker fail initiation relays) need only be verified with the control circuitry every twelve years.~~

What is the difference between a distributed UFLS/UVLS and a non-distributed UFLS/UVLS scheme?

A distributed UFLS or UVLS scheme contains individual relays which make independent load shed decisions based on applied settings and localized voltage and/or current inputs. A distributed scheme may involve an enable/disable contact in the scheme and still be considered a distributed scheme. A non-distributed UFLS or UVLS scheme involves a system where there is some type of centralized measurement and load shed decision being made. A non-distributed UFLS/UVLS scheme is considered similar to an SPS scheme and falls under Table 1 for maintenance activities and intervals.

8.2 Retention of Records

PRC-005-1 describes a reporting or auditing cycle of one year and retention of records for three years. However, with a three year retention cycle, the records of verification for a Protection System might be discarded before the next verification, leaving no record of what was done if a Misoperation or failure is to be analyzed.

PRC-005-2 corrects this by requiring:

The Transmission Owner, Generator Owner, and Distribution Provider shall each retain documentation of the two most recent performances of each distinct maintenance activity for the Protection System components, or to the previous scheduled (on-site) audit date, whichever is longer.

This requirement assures that the documentation shows that the interval between maintenance cycles correctly meets the maintenance interval limits. The requirement is actually alerting the

industry to documentation requirements already implemented by audit teams. Evidence of compliance bookending the interval shows interval accomplished instead of proving only your planned interval.

8.2.1 Frequently Asked Questions:

Please use a specific example to demonstrate the data retention requirements.
The data retention requirements are intended to allow the availability of maintenance records to demonstrate that the time intervals in your maintenance plan were upheld. For example: "Company A" has a maintenance plan that requires its electromechanical protective relays be tested, for routine scheduled tests, every 3 calendar years with a maximum allowed grace period of an additional 18 months. This entity would be required to maintain its records of maintenance of its last two routine scheduled tests. Thus its test records would have a latest routine test as well as its previous routine test. The interval between tests is therefore provable to an auditor as being within "Company A's" stated maximum time interval of 4.5 years.

The intent is not to require three test results proving two time intervals, but rather have two test results proving the last interval. The drafting team contends that this minimizes storage requirements while still having minimum data available to demonstrate compliance with time intervals.

Realistically, the Standard is providing advanced notice of audit team documentation requests; this type of information has already been requested by auditors.

If an entity prefers to utilize Performance Based Maintenance then statistical data may well be retained for extended periods to assist with future adjustments in time intervals.

If an equipment item is replaced then the entity can restart the maintenance-time-interval-clock if desired, however the replacement of equipment does not remove any documentation requirements that would have been required to verify compliance with time-interval requirements; in other words do not discard maintenance data that goes to verify your work.

The retention of documentation for new and/or replaced equipment is all about proving that the maintenance intervals had been in compliance. For example, a long range plan of upgrades might lead an entity to ignore required maintenance; retaining the evidence of prior maintenance that existed before any retirements and upgrades proves compliance with the Standard.

What does this Maintenance Standard say about commissioning? Is it necessary to have documentation in your maintenance history of the completion of commission testing?
This Standard does not establish requirements for commission testing. Commission testing includes all testing activities necessary to conclude that a facility has been built in accordance with design. While a thorough commission testing program would include, either directly or indirectly, the verification of all those Protection System attributes addressed by the maintenance activities specified in the Tables of PRC-005-2, verification of the adequacy of initial installation necessitates the performance of testing and inspections that go well beyond these routine maintenance activities. For example, commission testing might set baselines for future tests; perform acceptance tests and/or warranty tests; utilize testing methods that are not generally done routinely like staged-fault-tests.

However, many of the Protection System attributes which are verified during commission testing are not subject to age related or service related degradation and need not be re-verified within an ongoing maintenance program. Example – it is not necessary to re-verify correct terminal strip wiring on an ongoing basis.

PRC-005-2 assumes that thorough commission testing was performed prior to a Protection System being placed in service. PRC-005-2 requires performance of maintenance activities that are deemed necessary to detect and correct plausible age and service related degradation of components such that a properly built and commission tested Protection System will continue to function as designed over its service life.

It should be noted that commission testing frequently is performed by a different organization than that which is responsible for the ongoing maintenance of the Protection System. Furthermore, the commission testing activities will not necessarily correlate directly with the maintenance activities required by the Standard. As such, it is very likely that commission testing records will deviate significantly from maintenance records in both form and content and therefore, it is not necessary to maintain commission testing records within the maintenance program documentation.

Notwithstanding the differences in records, an entity would be wise to retain commissioning records to show a maintenance start date. (See below). An entity that requires that their commissioning tests have, at a minimum, the requirements of PRC-005-2 would help that entity prove time interval maximums by setting the initial time clock.

How do you determine the initial due date for maintenance?

The initial due date for maintenance should be based upon when a Protection System was tested. Alternatively, an entity may choose to use the date of completion of the commission testing of the Protection System component and the system was placed into service as the starting point in determining its first maintenance due dates. Whichever method is chosen, for newly installed Protection Systems the components should not be placed into service until minimum maintenance activities have taken place.

It is conceivable that there can be a (substantial) difference in time between the date of testing as compared to the date placed into service. The use of the "Calendar Year" language can help determine the next due date without too much concern about being non-compliant for missing test dates by a small amount (provided your dates are not already at the end of a year). However, if there is a substantial amount of time difference between testing and in-service dates then the testing date should be followed because it is the degradation of components that is the concern. While accuracy fluctuations may decrease when components are not energized there are cases when degradation can take place even though the device is not energized. Minimizing the time between commissioning tests and in-service dates will help.

If I miss two battery inspections four times out of 100 Protection System components on my transmission system, does that count as 2 percent or 8 percent when counting Violation Severity Level (VSL) for R3?

The entity failed to complete its scheduled program on two of its one hundred Protection System components which would equate to two percent for application to the VSL Table for Requirement R3.

How do I achieve a "grace period" without being out of compliance?
For the purposes of this example, concentrating on just unmonitored protective relays,– Table 1-1 specifies a maximum time interval (between the mandated maintenance activities) of 6 calendar years. Your plan must ensure that your unmonitored relays are tested at least once every 6 calendar years. You could, within your PSMP, require that your unmonitored relays be tested every 4 calendar years with a maximum allowable time extension of 18 calendar months. This allows an entity to have deadlines set for the auto-generation of work orders but still have the flexibility in scheduling complex work schedules. This also allows for that 18 calendar months to act as a buffer, a grace period, in the event of unforeseen events. You will note that this example of a maintenance plan interval has a planned time of 4 years; it also has a built-in time extension allowed within the PSMP and yet does not exceed the maximum time interval allowed by the Standard. So while there are no time extensions allowed beyond the Standard, an entity can still have substantial flexibility to maintain their Protection System components.

8.3 Basis for Table 1 Intervals

When developing the original *Protection System Maintenance – A Technical Reference* in 2007. the SPCTF collected all available data from Regional Entities (REs) on time intervals recommended for maintenance and test programs. The recommendations vary widely in categorization of relays, defined maintenance actions, and time intervals, precluding development of intervals by averaging. The SPCTF also reviewed the 2005 Report [2] of the IEEE Power System Relaying Committee Working Group I-17 (Transmission Relay System Performance Comparison). Review of the I-17 report shows data from a small number of utilities, with no company identification or means of investigating the significance of particular results.

To develop a solid current base of practice, the SPCTF surveyed its members regarding their maintenance intervals for electromechanical and microprocessor relays, and asked the members to also provide definitively-known data for other entities. The survey represented 470 GW of peak load, or 64% of the NERC peak load. Maintenance interval averages were compiled by weighting reported intervals according to the size (based on peak load) of the reporting utility. Thus, the averages more accurately represent practices for the large populations of Protection Systems used across the NERC regions.

The results of this survey with weighted averaging indicate maintenance intervals of 5 years for electromechanical or solid state relays, and 7 years for unmonitored microprocessor relays.

A number of utilities have extended maintenance intervals for microprocessor relays beyond 7 years, based on favorable experience with the particular products they have installed. To provide a technical basis for such extension, the SPCTF authors developed a recommendation of 10 years using the Markov modeling approach from [1] as summarized in Section 8.4. The results of this modeling depend on the completeness of self-testing or monitoring. Accordingly, this extended interval is allowed by Table 1 only when such relays are monitored as specified in the attributes of monitoring contained in Tables 1-1 through 1-5 and Table 2. Monitoring is capable of

reporting Protection System health issues that are likely to affect performance within the 10 year time interval between verifications.

It is important to note that, according to modeling results, Protection System availability barely changes as the maintenance interval is varied below the 10-year mark. Thus, reducing the maintenance interval does not improve Protection System availability. With the assumptions of the model regarding how maintenance is carried out, reducing the maintenance interval actually degrades Protection System availability.

8.4 Basis for Extended Maintenance Intervals for Microprocessor Relays

Table 1 allows maximum verification intervals that are extended based on monitoring level. The industry has experience with self-monitoring microprocessor relays that leads to the Table 1 value for a monitored relay as explained in Section 8.3. To develop a basis for the maximum interval for monitored relays in their *Protection System Maintenance – A Technical Reference*, the SPCTF used the methodology of Reference [1], which specifically addresses optimum routine maintenance intervals. The Markov modeling approach of [1] is judged to be valid for the design and typical failure modes of microprocessor relays.

The SPCTF authors ran test cases of the Markov model to calculate two key probability measures:

- Relay Unavailability - the probability that the relay is out of service due to failure or maintenance activity while the power system element to be protected is in service.
- Abnormal Unavailability - the probability that the relay is out of service due to failure or maintenance activity when a fault occurs, leading to failure to operate for the fault.

The parameter in the Markov model that defines self-monitoring capability is ST (for self test). ST = 0 if there is no self-monitoring; ST = 1 for full monitoring. Practical ST values are estimated to range from .75 to .95. The SPCTF simulation runs used constants in the Markov model that were the same as those used in [1] with the following exceptions:

Sn, Normal tripping operations per hour = 21600 (reciprocal of normal fault clearing time of 10 cycles)

Sb, Backup tripping operations per hour = 4320 (reciprocal of backup fault clearing time of 50 cycles)

Rc, Protected component repairs per hour = 0.125 (8 hours to restore the power system)

Rt, Relay routine tests per hour = 0.125 (8 hours to test a Protection System)

Rr, Relay repairs per hour = 0.08333 (12 hours to complete a Protection System repair after failure)

Experimental runs of the model showed low sensitivity of optimum maintenance interval to these parameter adjustments.

The resulting curves for Relay Unavailability and Abnormal Unavailability versus maintenance interval showed a broad minimum (optimum maintenance interval) in the vicinity of 10 years –

the curve is flat, with no significant change in either unavailability value over the range of 9, 10, or 11 years. This was true even for a relay Mean Time between Failures (MTBF) of 50 years, much lower than MTBF values typically published for these relays. Also, the Markov modeling indicates that both the relay unavailability and abnormal unavailability actually become higher with more frequent testing. This shows that the time spent on these more frequent tests yields no failure discoveries that approach the negative impact of removing the relays from service and running the tests.
The PSMT SDT discussed the practical need for "time-interval extensions" or "grace periods" to allow for scheduling problems that resulted from any number of business contingencies. The time interval discussions also focused on the need to reflect industry norms surrounding Generator outage frequencies. Finally it was again noted that FERC Order 693 demanded maximum time intervals. "Maximum time intervals" by their very term negates any "time-interval extension" or "grace periods". To recognize the need to follow industry norms on Generator outage frequencies and accommodate a form of time-interval extension while still following FERC Order 693 the Standard Drafting Team arrived at a 6 year interval for the electromechanical relay instead of the 5 year interval arrived at by the SPCTF. The PSMT SDT has followed the FERC directive for a *maximum* time interval and has determined that no extensions will be allowed. Six years has been set for the maximum time interval between manual maintenance activities. This maximum time interval also works well for maintenance cycles that have been in use in generator plants for decades.

For monitored relays, the PSMT SDT notes that the SPCTF called for 10 years as the interval between maintenance activities. This 10 year interval was chosen even though there was "…no significant change in unavailability value over the range of 9, 10, or 11 years. This was true even for a relay Mean Time between Failures (MTBF) of 50 years…" The Standard Drafting Team again sought to align maintenance activities with known successful practices and outage schedules. The Standard does not allow extensions on any component of the Protection System; thus the maximum allowed interval for these components has been set to12 years. Twelve years also fits well into the traditional maintenance cycles of both substations and generator plants.

Also of note is the Table's use of the term "Calendar" in the column for "Maximum Maintenance Interval". The PSMT SDT deemed it necessary to include the term "Calendar" to facilitate annual maintenance planning, scheduling and implementation. This need is the result of known occurrences of system requirements that could cause maintenance schedules to be missed by a few days or weeks. The PSMT SDT chose the term "Calendar" to preclude the need to have schedules be met to the day. An electromechanical protective relay that is maintained in year #1 need not be revisited until 6 years later (year #7). For example: a relay was maintained April 10, 2008; maintenance would need to be completed no later than December 31, 2014.

Though not a requirement of this Standard, to stay in line with many Compliance Enforcement Agencies audit processes an entity should define, within their own PSMP, the entity's use of terms like annual, calendar year, etc. Then, once this is within the PSMP the entity should abide by their chosen language.

9. Performance-Based Maintenance Process

In lieu of using the Table 1 intervals, a Performance-Based Maintenance process may be used to establish maintenance intervals (*PRC-005 Attachment A Criteria for a Performance-Based Protection System Maintenance Program*). A Performance-Based Maintenance process may justify longer maintenance intervals, or require shorter intervals relative to Table 1. In order to use a Performance-Based Maintenance process, the documented maintenance program must include records of repairs, adjustments, and corrections to covered Protection Systems in order to provide historical justification for intervals other than those established in Table 1. Furthermore, the asset owner must regularly analyze these records of corrective actions to develop a ranking of causes. Recurrent problems are to be highlighted, and remedial action plans are to be documented to mitigate or eliminate recurrent problems.

Entities with Performance-Based Maintenance track performance of Protection Systems, demonstrate how they analyze findings of performance failures and aberrations, and implement continuous improvement actions. Since no maintenance program can ever guarantee that no malfunction can possibly occur, documentation of a Performance-Based Maintenance program would serve the utility well in explaining to regulators and the public a Misoperation leading to a major system outage event.

A Performance-Based Maintenance program requires auditing processes like those included in widely used industrial quality systems (such as ***ISO 9001-2000, Quality management systems — Requirements;*** or applicable parts of the NIST Baldridge National Quality Program). The audits periodically evaluate:

- The completeness of the documented maintenance process
- Organizational knowledge of and adherence to the process
- Performance metrics and documentation of results
- Remediation of issues
- Demonstration of continuous improvement.

In order to opt into a Performance-Based Maintenance (PBM) program the asset owner must first sort the various Protection System components into population segments. Any population segment must be comprised of at least 60 individual units; if any asset owner opts for PBM but does not own 60 units to comprise a population then that asset owner may combine data from other asset owners until the needed 60 units is aggregated. Each population segment must be composed of a grouping of Protection Systems or components of a consistent design standard or particular model or type from a single manufacturer and subjected to similar environmental factors. For example: One segment cannot be comprised of both GE & Westinghouse electro-mechanical lock-out relays; likewise, one segment cannot be comprised of 60 GE lock-out relays, 30 of which are in a dirty environment and the remaining 30 from a clean environment. This PBM process cannot be applied to batteries but can be applied to all other components of a Protection System including (but not limited to) specific battery chargers, instrument transformers, trip coils and/or control circuitry (etc.).

9.1 Minimum Sample Size

Large Sample Size

An assumption that needs to be made when choosing a sample size is "the sampling distribution of the sample mean can be approximated by a normal probability distribution." The Central Limit Theorem states: "In selecting simple random samples of size *n* from a population, the sampling distribution of the sample mean *x* can be approximated by a normal probability distribution as the sample size becomes large." (Essentials of Statistics for Business and Economics, Anderson, Sweeney, Williams, 2003)

To use the Central Limit Theorem in statistics, the population size should be large. The references below are supplied to help define what is large.

> "… whenever we are using a large simple random sample (rule of thumb: n>=30), the central limit theorem enables us to conclude that the sampling distribution of the sample mean can be approximated by a normal distribution." (Essentials of Statistics for Business and Economics, Anderson, Sweeney, Williams, 2003)
>
> "If samples of size n, when n>=30, are drawn from any population with a mean *u* and a standard deviation σ, the sampling distribution of sample means approximates a normal distribution. The greater the sample size, the better the approximation." (Elementary Statistics - Picturing the World, Larson, Farber, 2003)
>
> "The sample size is large (generally n>=30)… (Introduction to Statistics and Data Analysis - Second Edition, Peck, Olson, Devore, 2005)
>
> "… the normal is often used as an approximation to the *t* distribution in a test of a null hypothesis about the mean of a normally distributed population when the population variance is estimated from a relatively large sample. A sample size exceeding 30 is often given as a minimal size in this connection." (Statistical Analysis for Business Decisions, Peters, Summers, 1968)

Error of Distribution Formula

Beyond the large sample size discussion above, a sample size requirement can be estimated using the bound on the Error of Distribution Formula when the expected result is of a "Pass/Fail" format and will be between 0 and 1.0.

The Error of Distribution Formula is:

$$B = z\sqrt{\frac{\pi(1-\pi)}{n}}$$

Where:

B = bound on the error of distribution (allowable error)

z = standard error
π = expected failure rate
n = sample size required

Solving for n provides:

$$n = \pi(1-\pi)\left(\frac{z}{B}\right)^2$$

Minimum Population Size to use Performance-Based Program
One entity's population of components should be large enough to represent a sizeable sample of a vendor's overall population of manufactured devices. For this reason the following assumptions are made:

B = 5%
z = 1.96 (This equates to a 95% confidence level)
π = 4%

Using the equation above, n=59.0.

Minimum Sample Size to evaluate Performance-Based Program
The number of components that should be included in a sample size for evaluation of the appropriate testing interval can be smaller because a lower confidence level is acceptable since the sample testing is repeated or updated annually. For this reason, the following assumptions are made:

B = 5%
z = 1.44 (85% confidence level)
π = 4%

Using the equation above, n=31.8.

Recommendation
Based on the above discussion, a sample size should be at least 30 to allow use of the equation mentioned. Using this and the results of the equation, the following numbers are recommended (and required within the Standard):

Minimum Population Size to use Performance-Based Maintenance Program = 60

Minimum Sample Size to evaluate Performance-Based Program = 30.

Once the population segment is defined then maintenance must begin within the intervals as outlined for the device described in the Tables 1-1 through 1-5. Time intervals can be lengthened provided the last year's worth of components tested (or the last 30 units maintained, whichever is more) had fewer than 4% countable events. It is notable that 4% is specifically chosen because an entity with a small population (60 units) would have to adjust its time intervals between

maintenance if more than 1 countable event was found to have occurred during the last analysis period. A smaller percentage would require that entity to adjust the time interval between maintenance activities if even one unit is found out of tolerance or causes a Misoperation.

The minimum number of units that can be tested in any given year is 5% of the population. Note that this 5% threshold sets a practical limitation on total length of time between intervals at 20 years.

If at any time the number of countable events equals or exceeds 4% of the last year's tested components (or the last 30 units maintained, whichever is more) then the time period between manual maintenance activities must be decreased. There is a time limit on reaching the decreased time at which the countable events is less than 4%; this must be attained within three years.

This additional time period of three years to restore segment performance to <4% countable events is mandated to keep entities from "gaming the PBM system". It is believed that this requirement provides the economic disincentives to discourage asset owners from arbitrarily pushing the PBM time intervals out to up to 20 years without proper statistical data.

9.2 Frequently Asked Questions:

I'm a small entity and cannot aggregate a population of Protection System components to establish a segment required for a Performance-Based Protection System Maintenance Program. How can I utilize that opportunity?
Multiple asset owning entities may aggregate their individually owned populations of individual Protection System components to create a segment that crosses ownership boundaries. All entities participating in a joint program should have a single documented joint management process, with consistent Protection System Maintenance Programs (practices, maintenance intervals and criteria), for which the multiple owners are individually responsible with respect to the requirements of the Standard. The requirements established for Performance-Based Maintenance must be met for the overall aggregated program on an ongoing basis.

The aggregated population should reflect all factors that affect consistent performance across the population, including any relevant environmental factors such as geography, power-plant vs. substation, and weather conditions.

Can an owner go straight to a Performance-Based Maintenance program schedule, if they have previously gathered records?
Yes. An owner can go to a Performance-Based Maintenance program immediately. The owner will need to comply with the requirements of a Performance-Based Maintenance program as listed in the Standard. Gaps in the data collected will not be allowed; therefore, if an owner finds that a gap exists such that they cannot prove that they have collected the data as required for a Performance-Based Maintenance program then they will need to wait until they can prove compliance.

When establishing a Performance-Based Maintenance program, can I use test data from the device manufacturer, or industry survey results, as results to help establish a basis for my Performance-Based intervals?
No. You must use actual in-service test data for the components in the segment.

What types of misoperations or events are not considered countable events in the Performance-Based Protection System Maintenance (PBM) Program?
Countable events are intended to address conditions that are attributed to hardware failure or calibration failure; that is, conditions that reflect deteriorating performance of the component. These conditions include any condition where the device previously worked properly, then, due to changes within the device, malfunctioned or degraded to the point that re-calibration (to within the entity's tolerance) was required.
For this purpose of tracking hardware issues, human errors resulting in Protection System misoperations during system installation or maintenance activities are not considered countable events. Examples of excluded human errors include relay setting errors, design errors, wiring errors, inadvertent tripping of devices during testing or installation, and misapplication of Protection System components. Examples of misapplication of Protection System components include wrong CT or PT tap position, protective relay function misapplication, and components not specified correctly for their installation. Obviously, if one is setting up relevant data about hardware failures then human failures should be eliminated from the hardware performance analysis.

One example of human-error is not pertinent data might be in the area of testing "86" lock-out relays (LOR). "Entity A" has two types of LOR's type "X" and type "Y"; they want to move into a performance based maintenance interval. They have 1000 of each type, so the population variables are met. During electrical trip testing of all of their various schemes over the initial six-year interval they find zero type "X" failures, but human error led to tripping a BES element 100 times; they find 100 type "Y" failures and had an additional 100 human-error caused tripping incidents. In this example the human-error caused misoperations should not be used to judge the performance of either type of LOR. Analysis of the data might lead "Entity A" to change time intervals. Type "X" LOR can be placed into extended time interval testing because of its low failure rate (zero failures) while Type "Y" would have to be tested more often than every 6 calendar years (100 failures divided by 1000 units exceeds the 4% tolerance level).

Certain types of Protection System component errors that cause misoperations are not considered countable events. Examples of excluded component errors include device malfunctions that are correctable by firmware upgrades and design errors that do not impact protection function.

What are some examples of methods of correcting segment perfomance for Performance-Based Maintenance?
There are a number of methods that may be useful for correcting segment performance for mal-performing segments in a Performance-Based Maintenance system. Some examples are listed below.

- The maximum allowable interval, as established by the Performance-Based Maintenance system, can be decreased. This may, however, be slow to correct the performance of the segment.

- Identifiable sub-groups of components within the established segment, which have been identified to be the mal-performing portion of the segment, can be broken out as an independent segment for target action. Each resulting segment must satisfy the minimum population requirements for a Performance-Based Maintenance program in order to remain within the program.
- Targeted corrective actions can be taken to correct frequently occurring problems. An example would be replacement of capacitors within electromechanical distance relays if bad capacitors were determined to be the cause of the mal-performance.
- Components within the mal-performing segment can be replaced with other components (electromechanical distance relays with microprocessor relays, for example) to remove the mal-performing segment.

If I find (and correct) a maintenance-correctable issue as a result of a misoperation investigation (Re: PRC-004), how does this affect my Performance-Based Maintenance program?

If you perform maintenance on a Protection System component for any reason (including as part of a PRC-004 required misoperation investigation/corrective action), the actions performed can count as a maintenance activity, and, if you desire, "reset the clock" on everything you've done. In a Performance-Based Maintenance program, you also need to record the maintenance-correctable issue with the relevant component group and use it in the analysis to determine your correct Performance-Based Maintenance interval for that component group. Note that "resetting the clock" should not be construed as interfering with an entity's routine testing schedule because the "clock-reset" would actually make for a decreased time interval by the time the next routine test schedule comes around.

For example a relay scheme, consisting of 4 relays, is tested on 1-1-11 and the PSMP has a time interval of 3 calendar years with an allowable extension of 1 calendar year. The relay would be due again for routine testing before the end of the year 2015. This mythical relay scheme has a misoperation on 6-1-12 that points to one of the four relays as bad. Investigation proves a bad relay and a new one is tested and installed in place of the original. This replacement relay actually could be retested before the end of the year 2016 (clock-reset) and not be out of compliance. This requires tracking maintenance by individual relays and is allowed. However, many companies schedule maintenance in other ways like by substation or by circuit breaker or by relay scheme. By these methods of tracking maintenance that "replaced relay" will be retested before the end of the year 2015. This is also acceptable. In no case was a particular relay tested beyond the PSMP of 4 years max, nor was the 6 year max of the Standard exceeded. The entity can reset the clock if they desire or the entity can continue with original schedules and, in effect, test even more frequently.

Why are batteries excluded from PBM? What about exclusion of batteries from condition based maintenance?

Batteries are the only element of a Protection System that is a perishable item with a shelf life. As a perishable item batteries require not only a constant float charge to maintain their freshness (charge), but periodic inspection to determine if there are problems associated with their aging

process and testing to see if they are maintaining a charge or can still deliver their rated output as required.
Besides being perishable, a second unique feature of a battery that is unlike any other Protection System element is that a battery uses chemicals, metal alloys, plastics, welds, and bonds that must interact with each other to produce the constant dc source required for Protection Systems, undisturbed by ac system disturbances.

No type of battery manufactured today for Protection System application is free from problems that can only be detected over time by inspection and test. These problems can arise from variances in the manufacturing process, chemicals and alloys used in the construction of the individual cells, quality of welds and bonds to connect the components, the plastics used to make batteries and the cell forming process for the individual battery cells.

Other problems that require periodic inspection and testing can result from transportation from the factory to the job site, length of time before a charge is put on the battery, the method of installation, the voltage level and duration of equalize charges, the float voltage level used, and the environment that the battery is installed in.

All of the above mentioned factors and several more not discussed here are beyond the control of the Functional Entities that want to use a Performance-Based Protection System Maintenance (PBM) program. These inherent variances in the aging process of a battery cell make establishment of a designated segment based on manufacturer and type of battery impossible.

The whole point of PBM is that if all variables are isolated then common aging and performance criteria would be the same. However, there are too many variables in the electrochemical process to completely isolate all of the performance-changing criteria.

Similarly, Functional Entities that want to establish a condition-based maintenance program using the highest levels of monitoring, resulting in the least amount of hands-on maintenance activity, cannot completely eliminate some periodic maintenance of the battery used in a station dc supply. Inspection of the battery is required on a Maximum Maintenance Interval listed in the tables due to the aging processes of station batteries. However, higher degrees of monitoring of a battery can eliminate the requirement for some periodic testing and some inspections (see Table 1-4).

Please provide an example of the calculations involved in extending maintenance time intervals using PBM.
Entity has 1000 GE-HEA lock-out relays; this is greater than the minimum sample requirement of 60.

They start out testing all of the relays within the prescribed Table requirements (6 year max) by testing the relays every 5 years. The entity's plan is to test 200 units per year; this is greater than the minimum sample size requirement of 30.

For the sake of example only the following will show 6 failures per year, reality may well have different numbers of failures every year. PBM requires annual assessment of failures found per units tested.

After the first year of tests the entity finds 6 failures in the 200 units tested. 6/200= 3% failure rate.

This entity is now allowed to extend the maintenance interval if they choose.

The entity chooses to extend the maintenance interval of this population segment out to 10 years.

This represents a rate of 100 units tested per year; entity selects 100 units to be tested in the following year.

After that year of testing these 100 units the entity again finds 6 failed units. 6/100= 6% failures.

This entity has now exceeded the acceptable failure rate for these devices and must accelerate testing of all of the units at a higher rate such that the failure rate is found to be less than 4% per year; the entity has three years to get this failure rate down to 4% or less (per year).

In response to the 6% failure rate, the entity decreases the testing interval to 8 years. This means that they will now test 125 units per year (1000/8). The entity has just two years left to get the test rate corrected.

After a year they again find 6 failures out of the 125 units tested. 6/125= 5% failures.

In response to the 5% failure rate, the entity decreases the testing interval to 7 years. This means that they will now test 143 units per year (1000/7). The entity has just one year left to get the test rate corrected.

After a year they again find 6 failures out of the 143 units tested. 6/143= 4.2% failures.

(Note that the entity has tried 5 years and they were under the 4% limit and they tried 7 years and they were over the 4% limit. They must be back at 4% failures or less in the next year so they might simply elect to go back to 5 years.)

Instead, in response to the 5% failure rate, the entity decreases the testing interval to 6 years. This means that they will now test 167 units per year (1000/6).

After a year they again find 6 failures out of the 167 units tested. 6/167= 3.6% failures.

Entity found that they could maintain the failure rate at no more than 4% failures by maintaining the testing interval at 6 years or less. Entity chose 6 year interval and effectively extended their TBM (5 years) program by 20%.

A note of practicality is that an entity will probably be in better shape to lengthen the intervals between tests if the failure rate is less than 2%. But the requirements allow for annual adjustments if the entity desires. As a matter of maintenance management, an ever-changing test rate (units tested / year) may be un-workable.

Note that the “5% of components” requirement effectively sets a practical limit of 20 year maximum PBM interval. Also of note is the “3 years” requirement; this is there to prevent an

entity from "gaming the system". An entity might arbitrarily extend time intervals from 6 years to 20 years. In the event that an entity finds a failure rate greater than 4% then the test rate must be accelerated such that within three years the failure rate must be brought back down to 4% or less.

Here is a table that demonstrates the values discussed:

Year #	Total Population (P)	Test Interval (I)	Units to be Tested (U= P/I)	# of Failures Found (F)	Failure Rate (=F/U)	Decision to Change Interval Yes or No	Interval Chosen
1	1000	5 yrs	200	6	3%	Yes	10 yrs
2	1000	10 yrs	100	6	6%	Yes	8 yrs
3	1000	8 yrs	125	6	5%	Yes	7 yrs
4	1000	7 yrs	143	6	4.2%	Yes	6 yrs
5	1000	6 yrs	167	6	3.6%	No	6 yrs

Please provide an example of the calculations involved in extending maintenance time intervals using PBM for control circuitry.

Note that the following example captures "Control Circuitry" as all of the trip paths associated with a particular trip coil of a circuit breaker. An entity is not restricted to this method of counting control circuits. Perhaps another method an entity would prefer would be to simply track every individual (parallel) trip path. Or perhaps another method would be to track all of the trip outputs from a specific (set) of relays protecting a specific element. Under the included definition of "Component":

The designation of what constitutes a control circuit component is very dependent upon how an entity performs and tracks the testing of the control circuitry. Some entities test their control circuits on a breaker basis whereas others test their circuitry on a local zone of protection basis. Thus, entities are allowed the latitude to designate their own definitions of control circuit components. Another example of where the entity has some discretion on determining what constitutes a single component is the voltage and current sensing devices, where the entity may choose either to designate a full three-phase set of such devices or a single device as a single component.

And in Attachment A (PBM) the definition of Segment:

Segment – *Protection Systems or components of a consistent design standard, or a particular model or type from a single manufacturer that typically share other common elements. Consistent performance is expected across the entire population of a segment. A segment must contain at least sixty (60) individual components.*

Example:
Entity has 1000 circuit breakers, all of which have two trip coils for a total of 2000 trip coils; if all circuitry was designed and built with a consistent (internal entity) standard then this is greater than the minimum sample requirement of 60.
For the sake of further example the following facts are given:
Half of all relay panels (500) were built 40 years ago by an outside contractor, consisted of asbestos wrapped 600V-insulation panel wiring and the cables exiting the control house are THHN pulled in conduit direct to exactly half of all of the various circuit breakers. All of the relay panels and cable pulls were built with consistent standards and consistent performance standard expectations within the segment (which is greater than 60). Each relay panel has redundant microprocessor (MPC) relays (retrofitted); each MPC relay supplies an individual trip output to each of the two trip coils of the assigned circuit breaker.

Approximately 35 years ago the entity developed their own internal construction crew and now builds all of their own relay panels from parts supplied from vendors that meet the entity's specifications, including SIS 600V insulation wiring and copper-sheathed cabling within the direct conduits to circuit breakers. The construction crew uses consistent standards in the construction. This newer segment of their Control Circuitry population is different than the original segment, consistent (standards, construction and performance expectations) within the new segment and constitutes the remainder of the entity's population, (another 500 panels and the cabling to the remaining 500 circuit breakers). Each relay panel has redundant

microprocessor (MPC) relays; each MPC relay supplies an individual trip output to each of the two trip coils of the assigned circuit breaker. Every trip path in this newer segment has a device that monitors the voltage directly across the trip contacts of the MPC relays and alarms via RTU and SCADA to the Operations Control room. This monitoring device, when not in alarm, demonstrates continuity all the way through the trip coil, cabling and wiring back to the trip contacts of the MPC relay.

The entity is tracking 2000 trip coils (each consisting of multiple trip paths) in each of these two segments. But half of all of the trip paths are monitored, therefore the trip paths are continuously tested and the circuit will alarm when there is a failure; these alarms have to be verified every 12 years for correct operation.

The entity now has 1000 trip coils (and associated trip paths) remaining that they have elected to count as control circuits. The entity has instituted a process that requires the verification of every trip path to each trip coil (one unit), including the electrical activation of the trip coil. (The entity notes that the trip coils will have to be tripped electrically more often than the trip path verification and is taking care of this activity through other documentation of real-time fault operations.)

They start out testing all of the trip coil circuits within the prescribed Table requirements (12 year max) by testing the trip circuits every 10 years. The entity's plan is to test 100 units per year; this is greater than the minimum sample size requirement of 30.

For the sake of example only the following will show 3 failures per year, reality may well have different numbers of failures every year. PBM requires annual assessment of failures found per units tested.

After the first year of tests the entity finds 3 failures in the 100 units tested. 3/100= 3% failure rate.

This entity is now allowed to extend the maintenance interval if they choose.

The entity chooses to extend the maintenance interval of this population segment out to 20 years.

This represents a rate of 50 units tested per year; entity selects 50 units to be tested in the following year.

After that year of testing these 50 units the entity again finds 3 failed units. 3/50= 6% failures.

This entity has now exceeded the acceptable failure rate for these devices and must accelerate testing of all of the units at a higher rate such that the failure rate is found to be less than 4% per year; the entity has three years to get this failure rate down to 4% or less (per year).

In response to the 6% failure rate, the entity decreases the testing interval to 16 years. This means that they will now test 63 units per year (1000/16). The entity has just two years left to get the test rate corrected.

After a year they again find 3 failures out of the 63 units tested. 3/63= 4.76% failures.

In response to the >4% failure rate, the entity decreases the testing interval to 14 years. This means that they will now test 72 units per year (1000/14). The entity has just one year left to get the test rate corrected.

After a year they again find 3 failures out of the 72 units tested. 3/72= 4.2% failures.

(Note that the entity has tried 10 years and they were under the 4% limit and they tried 14 years and they were over the 4% limit. They must be back at 4% failures or less in the next year so they might simply elect to go back to 10 years.)

Instead, in response to the 4.2% failure rate, the entity decreases the testing interval to 12 years. This means that they will now test 84 units per year (1000/12).

After a year they again find 3 failures out of the 84 units tested. 3/84= 3.6% failures.

Entity found that they could maintain the failure rate at no more than 4% failures by maintaining the testing interval at 12 years or less. Entity chose 12 year interval and effectively extended their TBM (10 years) program by 20%.

A note of practicality is that an entity will probably be in better shape to lengthen the intervals between tests if the failure rate is less than 2%. But the requirements allow for annual adjustments if the entity desires. As a matter of maintenance management, an ever-changing test rate (units tested / year) may be un-workable.

Note that the "5% of components" requirement effectively sets a practical limit of 20 year maximum PBM interval. Also of note is the "3 years" requirement; this is there to prevent an entity from "gaming the system". An entity might arbitrarily extend time intervals from 6 years to 20 years. In the event that an entity finds a failure rate greater than 4% then the test rate must be accelerated such that within three years the failure rate must be brought back down to 4% or less.

Here is a table that demonstrates the values discussed:

Year #	Total Population (P)	Test Interval (I)	Units to be Tested (U= P/I)	# of Failures Found (F)	Failure Rate (=F/U)	Decision to Change Interval Yes or No	Interval Chosen
1	1000	10 yrs	100	3	3%	Yes	20 yrs
2	1000	20 yrs	50	3	6%	Yes	16yrs
3	1000	16 yrs	63	3	4.8%	Yes	14 yrs
4	1000	14 yrs	72	3	4.2%	Yes	12 yrs
5	1000	12 yrs	84	3	3.6%	No	12 yrs

Please provide an example of the calculations involved in extending maintenance time intervals using PBM for voltage and current sensing devices.

Note that the following example captures "voltage and current inputs to the protective relays" as all of the various current transformer and potential transformer signals associated with a particular set of relays used for protection of a specific element. This entity calls this set of protective relays a "Relay Scheme". Thus this entity chooses to count PT and CT signals as a group instead of individually tracking maintenance activities to specific bushing CT's or specific PT's. An entity is not restricted to this method of counting voltage and current devices, signals and paths. Perhaps another method an entity would prefer would be to simply track every individual PT and CT. Note that a generation maintenance group may well select the latter because they may elect to perform routine off-line tests during generator outages whereas a transmission maintenance group might create a process that utilizes real-time system values measured at the relays. Under the included definition of "Component":

The designation of what constitutes a control circuit component is very dependent upon how an entity performs and tracks the testing of the control circuitry. Some entities test their control circuits on a breaker basis whereas others test their circuitry on a local zone of protection basis. Thus, entities are allowed the latitude to designate their own definitions of control circuit components. Another example of where the entity has some discretion on determining what constitutes a single component is the voltage and current sensing devices, where the entity may choose either to designate a full three-phase set of such devices or a single device as a single component.

And in Attachment A (PBM) the definition of Segment:

Segment – *Protection Systems or components of a consistent design standard, or a particular model or type from a single manufacturer that typically share other common elements. Consistent performance is expected across the entire population of a segment. A segment must contain at least sixty (60) individual components.*

Example:

Entity has 2000 "Relay Schemes", all of which have three current signals supplied from bushing CT's and three voltage signals supplied from substation bus PT's. All cabling and circuitry was designed and built with a consistent (internal entity) standard and this population is greater than the minimum sample requirement of 60.

For the sake of further example the following facts are given:

Half of all relay schemes (1000) are supplied with current signals from ANSI STD C800 bushing CT's and voltage signals from PT's built by ACME Electric MFR CO. All of the relay panels and cable pulls were built with consistent standards and consistent performance standard expectations exist for the consistent wiring, cabling and instrument transformers within the segment (which is greater than 60).

The other half of the entity's relay schemes have MPC relays with additional monitoring built-in that compare DNP values of voltages and currents (or Watts and VARs) as interpreted by the MPC relays and alarm for an entity-accepted tolerance level of accuracy. This newer segment of their "Voltage and Current Sensing" population is different than the original segment, consistent

(standards, construction and performance expectations) within the new segment and constitutes the remainder of the entity's population.

The entity is tracking many thousands of voltage and current signals within 2000 relay schemes (each consisting of multiple voltage and current signals) in each of these two segments. But half of all of the relay schemes voltage and current signals are monitored, therefore the voltage and current signals are continuously tested and the circuit will alarm when there is a failure; these alarms have to be verified every 12 years for correct operation.
The entity now has 1000 relay schemes worth of voltage and current signals remaining that they have elected to count within their relay schemes designation. The entity has instituted a process that requires the verification of these voltage and current signals within each relay scheme (one unit).
(Please note - a problem discovered with a current or voltage signal found at the relay could be caused by anything from the relay all the way to the signal source itself. Having many sources of problems can easily increase failure rates beyond the rate of failures of just one item (for example just PT's). It is the intent of the SDT to minimize failure rates of all of the equipment to an acceptable level thus any failure of any item that gets the signal from source to relay is counted. It is for this reason that the SDT chose to set the boundary at the ability of the signal to be delivered all the way to the relay.)

The entity will start out measuring all of the relay scheme voltage and currents at the individual relays within the prescribed Table requirements (12 year max) by measuring the voltage and current values every 10 years. The entity's plan is to test 100 units per year; this is greater than the minimum sample size requirement of 30.

For the sake of example only the following will show 3 failures per year, reality may well have different numbers of failures every year. PBM requires annual assessment of failures found per units tested.

After the first year of tests the entity finds 3 failures in the 100 units tested. 3/100= 3% failure rate.

This entity is now allowed to extend the maintenance interval if they choose.

The entity chooses to extend the maintenance interval of this population segment out to 20 years.

This represents a rate of 50 units tested per year; entity selects 50 units to be tested in the following year.

After that year of testing these 50 units the entity again finds 3 failed units. 3/50= 6% failures.

This entity has now exceeded the acceptable failure rate for these devices and must accelerate testing of all of the units at a higher rate such that the failure rate is found to be less than 4% per year; the entity has three years to get this failure rate down to 4% or less (per year).

In response to the 6% failure rate, the entity decreases the testing interval to 16 years. This means that they will now test 63 units per year (1000/16). The entity has just two years left to get the test rate corrected.

After a year they again find 3 failures out of the 63 units tested. 3/63= 4.76% failures.

In response to the >4% failure rate, the entity decreases the testing interval to 14 years. This means that they will now test 72 units per year (1000/14). The entity has just one year left to get the test rate corrected.

After a year they again find 3 failures out of the 72 units tested. 3/72= 4.2% failures.

(Note that the entity has tried 10 years and they were under the 4% limit and they tried 14 years and they were over the 4% limit. They must be back at 4% failures or less in the next year so they might simply elect to go back to 10 years.)

Instead, in response to the 4.2% failure rate, the entity decreases the testing interval to 12 years. This means that they will now test 84 units per year (1000/12).

After a year they again find 3 failures out of the 84 units tested. 3/84= 3.6% failures.

Entity found that they could maintain the failure rate at no more than 4% failures by maintaining the testing interval at 12 years or less. Entity chose 12 year interval and effectively extended their TBM (10 years) program by 20%.

A note of practicality is that an entity will probably be in better shape to lengthen the intervals between tests if the failure rate is less than 2%. But the requirements allow for annual adjustments if the entity desires. As a matter of maintenance management, an ever-changing test rate (units tested / year) may be un-workable.

Note that the "5% of components" requirement effectively sets a practical limit of 20 year maximum PBM interval. Also of note is the "3 years" requirement; this is there to prevent an entity from "gaming the system". An entity might arbitrarily extend time intervals from 6 years to 20 years. In the event that an entity finds a failure rate greater than 4% then the test rate must be accelerated such that within three years the failure rate must be brought back down to 4% or less.

Here is a table that demonstrates the values discussed:

Year #	Total Population (P)	Test Interval (I)	Units to be Tested (U= P/I)	# of Failures Found (F)	Failure Rate (=F/U)	Decision to Change Interval Yes or No	Interval Chosen
1	1000	10 yrs	100	3	3%	Yes	20 yrs
2	1000	20 yrs	50	3	6%	Yes	16yrs
3	1000	16 yrs	63	3	4.8%	Yes	14 yrs
4	1000	14 yrs	72	3	4.2%	Yes	12 yrs
5	1000	12 yrs	84	3	3.6%	No	12 yrs

10. Overlapping the Verification of Sections of the Protection System

Tables 1-1 through 1-5 require that every Protection System component be periodically verified. One approach, but not the only method, is to test the entire protection scheme as a unit, from the secondary windings of voltage and current sources to breaker tripping. For practical ongoing verification, sections of the Protection System may be tested or monitored individually. The boundaries of the verified sections must overlap to ensure that there are no gaps in the verification. See Appendix A of this Supplementary Reference for additional discussion on this topic.

All of the methodologies expressed within this report may be combined by an entity, as appropriate, to establish and operate a maintenance program. For example, a Protection System may be divided into multiple overlapping sections with a different maintenance methodology for each section:

- Time-based maintenance with appropriate maximum verification intervals for categories of equipment as given in the Tables 1-1 through 1-5;
- Monitoring as described in Tables 1-1 through 1-5;
- A Performance-Based Maintenance program as described in Section 9 above or Attachment A of the Standard;
- Opportunistic verification using analysis of fault records as described in Section 11

10.1 Frequently Asked Question:

My system has alarms that are gathered once daily through an auto-polling system; this is not really a conventional SCADA system but does it meet the Table 1 requirements for inclusion as a monitored system?
Yes, provided the auto-polling that gathers the alarms reports those alarms to a location where the action can be initiated to correct the maintenance-correctable issue. This location does not have to be the location of the engineer or the technician that will eventually repair the problem, but rather a location where the action can be initiated.

11. Monitoring by Analysis of Fault Records

Many users of microprocessor relays retrieve fault event records and oscillographic records by data communications after a fault. They analyze the data closely if there has been an apparent misoperation, as NERC Standards require. Some advanced users have commissioned automatic fault record processing systems that gather and archive the data. They search for evidence of component failures or setting problems hidden behind an operation whose overall outcome seems to be correct. The relay data may be augmented with independently captured digital fault recorder (DFR) data retrieved for the same event.

Fault data analysis comprises a legitimate CBM program that is capable of reducing the need for a manual time-interval based check on Protection Systems whose operations are analyzed. Even electromechanical Protection Systems instrumented with DFR channels may achieve some CBM benefit. The completeness of the verification then depends on the number and variety of faults in the vicinity of the relay that produce relay response records, and the specific data captured.

A typical fault record will verify particular parts of certain Protection Systems in the vicinity of the fault. For a given Protection System installation, it may or may not be possible to gather within a reasonable amount of time an ensemble of internal and external fault records that completely verify the Protection System.

For example, fault records may verify that the particular relays that tripped are able to trip via the control circuit path that was specifically used to clear that fault. A relay or DFR record may

indicate correct operation of the protection communications channel. Furthermore, other nearby Protection Systems may verify that they restrain from tripping for a fault just outside their respective zones of protection. The ensemble of internal fault and nearby external fault event data can verify major portions of the Protection System, and reset the time clock for the Table 1 testing intervals for the verified components only.

What can be shown from the records of one operation is very specific and limited. In a panel with multiple relays, only the specific relay(s) whose operation can be observed without ambiguity should be used. Be careful about using fault response data to verify that settings or calibration are correct. Unless records have been captured for multiple faults close to either side of a setting boundary, setting or calibration could still be incorrect.
PMU data, much like DME data, can be utilized to prove various components of the Protection System. Obviously, care must be taken to attribute proof only to the parts of a Protection System that can actually be proven using the PMU or DME data.

If fault record data is used to show that portions or all of a Protection System have been verified to meet Table 1 requirements, the owner must retain the fault records used, and the maintenance related conclusions drawn from this data and used to defer Table 1 tests, for at least the retention time interval given in Section 8.2.

11.1 Frequently Asked Question:

I use my protective relays for fault and disturbance recording, collecting oscillographic records and event records via communications for fault analysis to meet NERC and DME requirements. What are the maintenance requirements for the relays?
For relays used only as disturbance monitoring equipment, the NERC Standard PRC-018-1 R3 & R6 states the maintenance requirements, and is being addressed by a Standards activity that is revising PRC-002-1 and PRC-018-1. For protective relays “that are designed to provide protection for the BES,” this Standard applies, even if they also perform DME functions.

12. Importance of Relay Settings in Maintenance Programs

In manual testing programs, many utilities depend on pickup value or zone boundary tests to show that the relays have correct settings and calibration. Microprocessor relays, by contrast, provide the means for continuously monitoring measurement accuracy. Furthermore, the relay digitizes inputs from one set of signals to perform all measurement functions in a single self-monitoring microprocessor system. These relays do not require testing or calibration of each setting.

However, incorrect settings may be a bigger risk with microprocessor relays than with older relays. Some microprocessor relays have hundreds or thousands of settings, many of which are critical to Protection System performance.

Monitoring does not check measuring element settings. Analysis of fault records may or may not reveal setting problems. To minimize risk of setting errors after commissioning, the user should enforce strict settings data base management, with reconfirmation (manual or automatic) that the installed settings are correct whenever maintenance activity might have changed them. For background and guidance, see [5] in References.

Table 1 requires that settings must be verified to be as specified. The reason for this requirement is simple. With legacy relays (non-microprocessor protective relays) it is necessary to know the value of the intended setting in order to test, adjust and calibrate the relay. Proving that the relay works per specified setting was the de facto procedure. However, with the advanced microprocessor relays it is possible to change relay settings for the purpose of verifying specific functions and then neglect to return the settings to the specified values. While there is no specific

requirement to maintain a settings management process there remains a need to verify that the settings left in the relay are the intended, specified settings. This need may manifest itself after any of the following:

- One or more settings are changed for any reason.
- A relay fails and is repaired or replaced with another unit.
- A relay is upgraded with a new firmware version.

12.1 Frequently Asked Questions:

How do I approach testing when I have to upgrade firmware of a microprocessor relay?
The entity should ensure that the relay continues to function properly after implementation of firmware changes. Some entities may have a R&D department that might routinely run acceptance tests on devices with firmware upgrades before allowing the upgrade to be installed. Other entities may rely upon the vigorous testing of the firmware OEM. An entity has the latitude to install devices and/or programming that they believe will perform to their satisfaction. If an entity should choose to perform the maintenance activities specified in the Tables following a firmware upgrade then they may, if they choose, reset the time clock on that set of maintenance activities so that they would not have to repeat the maintenance on its regularly scheduled cycle. (However, for simplicity in maintenance schedules, some entities may choose to not reset this time clock; it is merely a suggested option.)

If I upgrade my old relays then do I have to maintain my previous equipment maintenance documentation?
If an equipment item is repaired or replaced then the entity can restart the maintenance-activity-time-interval-clock if desired, however the replacement of equipment does not remove any documentation requirements. The requirements in the Standard are intended to ensure that an entity has a maintenance plan and that the entity adheres to minimum activities and maximum time intervals. The documentation requirements are intended to help an entity demonstrate compliance. For example, saving the dates and records of the last two maintenance activities is intended to demonstrate compliance with the interval. Therefore, if you upgrade or replace equipment then you still must maintain the documentation for the previous equipment, thus demonstrating compliance with the time interval requirement prior to the replacement action.

We have a number of installations where we have changed our Protection System components. Some of the changes were upgrades, but others were simply system rating changes that merely required taking relays "out-of-service". What are our responsibilities when it comes to "out-of-service" devices?
Assuming that your system up-rates, upgrades and overall changes meet any and all other requirements and standards then the requirements of PRC-005-2 are simple – if the Protection System component performs a Protection System function then it must be maintained. If the component no longer performs Protection System functions then it does not require maintenance activities under the Tables of PRC-005-2. While many entities might physically remove a component that is no longer needed there is no requirement in PRC-005-2 to remove such component(s). Obviously, prudence would

dictate that an "out-of-service" device is truly made inactive. There are no record requirements listed in PRC-005-2 for Protection System components not used.

While performing relay testing of a protective device on our Bulk Electric System it was discovered that the protective device being tested was either broken or out of calibration. Does this satisfy the relay testing requirement even though the protective device tested bad, and may be unable to be placed back into service?

Yes, PRC-005-2 requires entities to perform relay testing on protective devices on a given maintenance cycle interval. By performing this testing, the entity has satisfied PRC-005-2 requirement although the protective device may be unable to be returned to service under normal calibration adjustments. R3 states (the entity must):

R3. Each Transmission Owner, Generator Owner, and Distribution Provider shall implement and follow its PSMP and initiate resolution of any identified unresolved maintenance ~~correctable~~ issues.

Also, when a failure occurs in a Protection System, power system security may be comprised, and notification of the failure must be conducted in accordance with relevant NERC Standards.

If I show the protective device out of service while it is being repaired then can I add it back as a new protective device when it returns? If not, my relay testing history would show that I was out of compliance for the last maintenance cycle.

The maintenance and testing requirements (R3) (in essence) state "…shall implement and follow its PSMP and initiate resolution of any identified unresolved maintenance ~~correctable~~ issues..." The type of corrective activity is not stated; however it could include repairs or replacements.

Your documentation requirements will increase, of course, to demonstrate that your device tested bad and had corrective actions initiated. Your regional entity could very well ask for documentation showing status of your corrective actions.

13. Self-Monitoring Capabilities and Limitations

Microprocessor relay proponents have cited the self-monitoring capabilities of these products for nearly 20 years. Theoretically, any element that is monitored does not need a periodic manual test. A problem today is that the community of manufacturers and users has not created clear documentation of exactly what is and is not monitored. Some unmonitored but critical elements are buried in installed systems that are described as self-monitoring.

To utilize the extended time intervals allowed by monitoring the user must document that the monitoring attributes of the device match the minimum requirements listed in the Table 1.
Until users are able to document how all parts of a system which are required for the protective functions are monitored or verified (with help from manufacturers), they must continue with the unmonitored intervals established in Table 1 and Table 3.

Going forward, manufacturers and users can develop mappings of the monitoring within relays, and monitoring coverage by the relay of user circuits connected to the relay terminals.

To enable the use of the most extensive monitoring (and never again have a hands-on maintenance requirement), the manufacturers of the microprocessor-based self-monitoring components in the Protection System should publish for the user a document or map that shows:

- How all internal elements of the product are monitored for any failure that could impact Protection System performance.
- Which connected circuits are monitored by checks implemented within the product; how to connect and set the product to assure monitoring of these connected circuits; and what circuits or potential problems are not monitored.

With this information in hand, the user can document monitoring for some or all sections by:

- Presenting or referencing the product manufacturer's documents.
- Explaining in a system design document the mapping of how every component and circuit that is critical to protection is monitored by the microprocessor product(s) or by other design features.
- Extending the monitoring to include the alarm transmission facilities through which failures are reported within a given time frame to allocate where action can be taken to initiate resolution of the alarm attributed to a unresolved maintenance ~~correctable~~ issue, so that failures of monitoring or alarming systems also lead to alarms and action.
- Documenting the plans for verification of any unmonitored components according to the requirements of Table 1 and Table 3.

13.1 Frequently Asked Question:

I can't figure out how to demonstrate compliance with the requirements for the highest level of monitoring of Protection Systems. Why does this Maintenance Standard describe a maintenance program approach I cannot achieve?

Demonstrating compliance with the requirements for the highest level of monitoring any particular component of Protection Systems is likely to be very involved, and may include detailed manufacturer documentation of complete internal monitoring within a device, comprehensive design drawing reviews, and other detailed documentation. This Standard does not presume to specify what documentation must be developed; only that it must be documented.

There may actually be some equipment available that is capable of meeting these highest levels of monitoring criteria, in which case it may be maintained according to the highest level of monitoring shown on the Tables. However, even if there is no equipment available today that can meet this level of monitoring; the Standard establishes the necessary requirements for when such equipment becomes available.

By creating a roadmap for development, this provision makes the Standard technology-neutral. The Standard Drafting Team wants to avoid the need to revise the Standard in a few years to accommodate technology advances that may be coming to the industry.

14. Notification of Protection System Failures

When a failure occurs in a Protection System, power system security may be compromised, and notification of the failure must be conducted in accordance with relevant NERC Standard(s). Knowledge of the failure may impact the system operator's decisions on acceptable loading conditions.

This formal reporting of the failure and repair status to the system operator by the Protection System owner also encourages the system owner to execute repairs as rapidly as possible. In some cases, a microprocessor relay or carrier set can be replaced in hours; wiring termination failures may be repaired in a similar time frame. On the other hand, a component in an electromechanical or early-generation electronic relay may be difficult to find and may hold up repair for weeks. In some situations, the owner may have to resort to a temporary protection panel, or complete panel replacement.

15. Maintenance Activities

Some specific maintenance activities are a requirement to ensure reliability. An example would be that a BES entity could be prudent in its protective relay maintenance but if its battery maintenance program is lacking then reliability could still suffer. The NERC glossary outlines a Protection System as containing specific components. PRC-005-2 requires specific maintenance activities be accomplished within a specific time interval. As noted previously, higher technology equipment can contain integral monitoring capability that actually performs maintenance verification activities routinely and often; therefore *manual intervention* to perform certain activities on these type components may not be needed.

15.1 Protective Relays (Table 1-1)

These relays are defined as the devices that receive the input signal from the current and voltage sensing devices and are used to isolate a faulted element of the BES. Devices that sense thermal, vibration, seismic, pressure, gas or any other non-electrical inputs are excluded.

Non-microprocessor based equipment is treated differently than microprocessor based equipment in the following ways, the relays should meet the asset owners' tolerances.

- Non-microprocessor devices must be tested with voltage and/or current applied to the device.
- Microprocessor devices may be tested through the integral testing of the device.
    - There is no specific protective relay commissioning test or relay routine test mandated.
    - There is no specific documentation mandated.

15.1.1 Frequently Asked Question:

What calibration tolerance should be applied on electromechanical relays?
Each entity establishes their own acceptable tolerances when applying protective relaying on their system. For some Protection System components, adjustment is required to bring measurement accuracy within the parameters established by the asset owner based on the specific application of the component. A calibration failure is the result if testing finds the specified parameters to be out of tolerance.

15.2 Voltage & Current Sensing Devices (Table 1-3)

These are the current and voltage sensing devices, usually known as instrument transformers. There is presently a technology available (fiber-optic Hall-effect) that does not utilize conventional transformer technology; these devices and other technologies that produce quantities that represent the primary values of voltage and current are considered to be a type of voltage and current sensing devices included in this Standard.

The intent of the maintenance activity is to verify the input to the protective relay from the device that produces the current or voltage signal sample.

There is no specific test mandated for these components. The important thing about these signals is to know that the expected output from these components actually reaches the protective relay. Therefore, the proof of the proper operation of these components also demonstrates the integrity of the wiring (or other medium used to convey the signal) from the current and voltage sensing device all the way to the protective relay. The following observations apply.

- There is no specific ratio test, routine test or commissioning test mandated.
- There is no specific documentation mandated.
- It is required that the signal be present at the relay.
- This expectation can be arrived at from any of a number of means; by calculation, by comparison to other circuits, by commissioning tests, by thorough inspection, or by any means needed to verify the circuit meets the asset owner's Protection System maintenance program.
- An example of testing might be a saturation test of a CT with the test values applied at the relay panel; this therefore tests the CT as well as the wiring from the relay all the back to the CT.
- Another possible test is to measure the signal from the voltage and/or current sensing devices, during load conditions, at the input to the relay.
- Another example of testing the various voltage and/or current sensing devices is to query the microprocessor relay for the real-time loading; this can then be compared to other devices to verify the quantities applied to this relay. Since the input devices have supplied the proper values to the protective relay then the verification activity has been satisfied. Thus event reports (and oscillographs) can be used to verify that the voltage and current sensing devices are performing satisfactorily.

- Still another method is to measure total watts and vars around the entire bus; this should add up to zero watts and zero vars thus proving the voltage and/or current sensing devices system throughout the bus.
- Another method for proving the voltage and/or current sensing devices is to complete commissioning tests on all of the transformers, cabling, fuses and wiring.
- Any other methods that provide documentation that the expected transformer values as applied to the inputs to the protective relays are acceptable.

15.2.1 Frequently Asked Questions:

What is meant by "…verify the current and voltage circuit inputs from the voltage and current sensing devices to the protective relays …" Do we need to perform ratio, polarity and saturation tests every few years?

No. You must verify that the protective relay is receiving the expected values from the voltage and current sensing devices (typically voltage and current transformers). This can be as difficult as is proposed by the question (with additional testing on the cabling and substation wiring to ensure that the values arrive at the relays); or simplicity can be achieved by other verification methods. While some examples follow, these are not intended to represent an all-inclusive list; technology advances and ingenuity should not be excluded from making comparisons and verifications:

- Compare the secondary values, at the relay, to a metering circuit, fed by different current transformers, monitoring the same line as the questioned relay circuit.
- Compare the individual phase secondary values at the relay panel (with additional testing on the panel wiring to ensure that the values arrive at those relays) with the other phases, and verify that residual currents are within expected bounds
- Observe all three phase currents and the residual current at the relay panel with an oscilloscope, observing comparable magnitudes and proper phase relationship, with additional testing on the panel wiring to ensure that the values arrive at the relays.
- Compare the values, as determined by the questioned relay (such as, but not limited to, a query to the microprocessor relay), to another protective relay monitoring the same line, with currents supplied by different CT's.
- Compare the secondary values, at the relay with values measured by test instruments (such as, but not limited to multi-meters, voltmeter, clamp-on ammeters, etc) and verified by calculations and known ratios to be the values expected. For example a single PT on a 100KV bus will have a specific secondary value that when multiplied by the PT ratio arrives at the expected bus value of 100KV.

- Query SCADA for the power flows at the far end of the line protected by the questioned relay, compare those SCADA values to the values as determined by the questioned relay.

- Totalize the Watts and VARs on the bus and compare the totals to the values as seen by the questioned relay.

The point of the verification procedure is to ensure that all of the individual components are functioning properly; and that, an ongoing proactive procedure is in place to re-check the various components of the protective relay measuring systems.

Is wiring insulation or hi-pot testing required by this Maintenance Standard?
No, wiring insulation and equipment hi-pot testing are not specifically required by the Maintenance Standard. However, if the method of verifying CT and PT inputs to the relay involves some other method than actual observation of current and voltage transformer secondary inputs to the relay, it might be necessary to perform some sort of cable integrity test to verify that the instrument transformer secondary signals are actually making it to the relay and not being shunted off to ground. For instance, you could use CT excitation tests and PT turns ratio tests and compare to baseline values to verify that the instrument transformer outputs are acceptable. However, to conclude that these acceptable transformer instrument output signals are actually making it to the relay inputs, it also would be necessary to verify the insulation of the wiring between the instrument transformer and the relay.

My plant generator and transformer relays are electromechanical and do not have metering functions as do microprocessor based relays. In order for me to compare the instrument transformer inputs to these relays to the secondary values of other metered instrument transformers monitoring the same primary voltage and current signals, it would be necessary to temporarily connect test equipment like voltmeters and clamp on ammeters to measure the input signals to the relays. This practice seems very risky and a plant trip could result if the technician were to make an error while measuring these current and voltage signals. How can I avoid this risk? Also, what if no other instrument transformers are available which monitor the same primary voltage or current signal?
Comparing the input signals to the relays to the outputs of other independent instrument transformers monitoring the same primary current or voltage is just one method of verifying the instrument transformer inputs to the relays but is not required by the Standard. Plants can choose how to best manage their risk. If online testing is deemed too risky, offline tests such as, but not limited to, CT excitation test and PT turns ratio tests can be compared to baseline data and be used in conjunction with CT and PT secondary wiring insulation verification tests to adequately "verify the current and voltage circuit inputs from the voltage and current sensing devices to the protective relays …" while eliminating the risk of tripping an in service generator or transformer. Similarly, this same offline test methodology can be used to verify the relay input voltage and current signals to relays when there are no other instrument transformers monitoring available for purposes of signal comparison.

15.3 Control circuitry associated with protective functions (Table 1-5)

This component of Protection Systems includes the trip coil(s) of the circuit breaker, circuit switcher or any other interrupting device. It includes the wiring from the batteries to the relays. It includes the wiring (or other signal conveyance) from every trip output to every trip coil. It includes any device needed for the correct processing of the needed trip signal to the trip coil of the interrupting device; this requirement is meant to capture inputs and outputs to and from a protective relay that are necessary for the correct operation of the protective functions. In short, every trip path must be verified; the method of verification is optional to the asset owner. An example of testing methods to accomplish this might be to verify, with a volt-meter, the existence of the proper voltage at the open contacts, the open circuited input circuit and at the trip coil(s). As every parallel trip path has similar failure modes, each trip path from relay to trip coil must be verified. Each trip coil must be tested to trip the circuit breaker (or other interrupting device) at least once. There is a requirement to operate the circuit breaker (or other interrupting device) at least once every six years as part of the complete functional test. If a suitable monitoring system is installed that verifies every parallel trip path then the manual-intervention testing of those parallel trip paths can be eliminated, however the actual operation of the circuit breaker must still occur at least once every six years. This 6-year tripping requirement can be completed as easily as tracking the real-time fault-clearing operations on the circuit breaker or tracking the trip coil(s) operation(s) during circuit breaker routine maintenance actions.

The circuit-interrupting device should not be confused with a motor-operated disconnect. The intent of this Standard is to require maintenance intervals and activities on Protection Systems equipment and not just all system isolating equipment.

It is necessary, however, to classify a device that actuates a high-speed auto-closing ground switch as an interrupting device if this ground switch is utilized in a Protection System and forces a ground fault to occur that then results in an expected Protection System operation to clear the forced ground fault. The SDT believes that this is essentially a transferred-tripping device without the use of communications equipment. If this high-speed ground switch is "…designed to provide protection for the BES…" then this device needs to be treated as any other Protection System component. The control circuitry would have to be tested within 12 years and any electromechanically operated device will have to be tested every 6 years. If the spring-operated ground switch can be disconnected from the solenoid triggering unit then the solenoid triggering unit can easily be tested without the actual closing of the ground blade.

~~Circuit breakers that participate in a UFLS or UVLS scheme are excluded from the tripping requirement, but not from the circuit test requirements; however the circuitry must be tested at least once every 12 years. There are many circuit interrupting devices in the distribution system that will be operating for any given under-frequency event that requires tripping for that event. A failure in the tripping action of a single distributed system circuit breaker (or non-BES equipment interruption device) will be far less significant than, for example, any single Transmission Protection System failure such as a failure of a bus differential lock-out relay. While many failures of these distributed system circuit breakers (or non-BES equipment interruption device) could add up to be significant, it is also believed that many circuit breakers~~

~~are operated often on just fault clearing duty and therefore these circuit breakers are operated at least as frequently as any requirements that appear in this Standard.~~ The dc control circuitry also includes each auxiliary tripping relay (94) and each lock-out relay (86) that may exist in any particular trip scheme. If these devices are electromechanical components then they must be trip tested. The PSMT SDT considers these components to share some similarities in failure modes as electromechanical protective relays; as such there is a six year maximum interval between mandated maintenance tasks unless PBM is applied.

Contacts of the 86 or 94 that pass the trip current on to the circuit interrupting device trip coils will have to be checked as part of the 12 year requirement. Normally-open contacts that are not used to pass a trip signal and normally-closed contacts do not have to be verified. Verification of the tripping paths is the requirement.

New technology is also accommodated here; there are some tripping systems that have replaced the traditional hard-wired trip circuitry with other methods of trip-signal conveyance such as fiber-optics. It is the intent of the PSMT SDT to include this, and any other, technology that is used to convey a trip signal from a protective relay to a circuit breaker (or other interrupting device) within this category of equipment.

15.3.1 Frequently Asked Questions:

Is it permissible to verify circuit breaker tripping at a different time (and interval) than when we verify the protective relays and the instrument transformers?
Yes, provided the entire Protective System is tested within the individual components' maximum allowable testing intervals.

The Protection System Maintenance Standard describes requirements for verifying the tripping of circuit breakers. What is this telling me about maintenance of circuit breakers?
Requirements in PRC-005-2 are intended to verify the integrity of tripping circuits, including the breaker trip coil, as well as the presence of auxiliary supply (usually a battery) for energizing the trip coil if a protection function operates. Beyond this, PRC-005-2 sets no requirements for verifying circuit breaker performance, or for maintenance of the circuit breaker.

How do I test each dc Control Circuit trip path, as established in Table 1-5 "Protection System Control Circuitry (Trip coils and auxiliary relays)"?
Table 1-5 specifies that each breaker trip coil, auxiliary relay that carries trip current to a trip coil, and lockout relays that carry trip current to a trip coil must be operated within the specified time period. The required operations may be via targeted maintenance activities, or by documented operation of these devices for other purposes such as fault clearing.

Are high-speed ground switch trip coils included in the dc control circuitry?
Yes. PRC-005-2 includes high-speed grounding switch trip coils within the dc control circuitry to the degree that the initiating Protection Systems are characterized as "transmission Protection Systems."

Does the control circuitry and trip coil of a non-BES breaker, tripped via a BES protection component, have to be tested per Table 1.5? (Refer to Table 3)

An example of an otherwise non-BES circuit breaker that is tripped via a BES protection component might be (but is not limited to) a 12.5KV circuit breaker feeding (non-black-start) radial loads but has a trip that originates from an under-frequency (81) relay.

- The relay must be verified.
- The voltage signal to the relay must be verified.
- All of the relevant dc supply tests still apply.
- The unmonitored trip circuit between the relay and any lock-out or auxiliary relay must be verified every 12 years.
- The unmonitored trip circuit between the lock-out or auxiliary relay does not have to be proven with an electrical trip.
- In the case where there is no lock-out or auxiliary tripping relay used, the trip circuit does not have to be proven with an electrical trip.
- The trip coil of the circuit breaker does not have to be individually proven with an electrical trip.

Do I have to verify operation of breaker "a" contacts or any other normally closed auxiliary contacts in the trip path of each breaker as part of my control circuit test?

Operation of normally-closed contacts does not have to be verified. Verification of the tripping paths is the requirement. The continuity of the normally closed contacts will be verified when the tripping path is verified.

15.4 Batteries and DC Supplies (Table 1-4)

IEEE guidelines were consulted to arrive at the maintenance activities for batteries. The following guidelines were used: IEEE 450 (for Vented Lead-Acid batteries), IEEE 1188 (for Valve-Regulated Lead-Acid batteries) and IEEE 1106 (for Nickel-Cadmium batteries).

The currently proposed NERC definition of a Protection System is

- Protective relays which respond to electrical quantities,
- Communications systems necessary for correct operation of protective functions,
- Voltage and current sensing devices providing inputs to protective relays,
- Station dc supply associated with protective functions (including station batteries, battery chargers, and non-battery-based dc supply), and
- Control circuitry associated with protective functions through the trip coil(s) of the circuit breakers or other interrupting devices."
- The station battery is not the only component that provides dc power to a Protection System. In the new definition for Protection System "station batteries" are replaced with "station dc supply" to make the battery charger and dc producing stored energy devices (that are not a battery) part of the Protection System that must be maintained.

The PSMT SDT recognizes that there are several technological advances in equipment and testing procedures that allow the owner to choose how to verify that a battery string is free of open circuits. The term "continuity" was introduced into the Standard to allow the owner to choose how to verify continuity of a battery set by various methods, and not to limit the owner to the two methods recommended in the IEEE standards. Continuity as used in Table 1-4 of the Standard refers to verifying that there is a continuous current path from the positive terminal of the station battery set to the negative terminal. Without verifying continuity of a station battery, there is no way to determine that the station battery is available to supply dc power to the station. An open battery string will be an unavailable power source in the event of loss of the battery charger.

Batteries cannot be a unique population segment of a Performance-Based Maintenance Program (PBM) because there are too many variables in the electrochemical process to completely isolate all of the performance-changing criteria necessary for using PBM on battery systems. However, nothing precludes the use of a PBM process for any other part of a dc supply besides the batteries themselves.

15.4.1 Frequently Asked Questions:

What constitutes the station dc supply as mentioned in the definition of Protective System?
The previous definition of Protection System includes batteries, but leaves out chargers. The latest definition includes chargers as well as dc systems that do not utilize batteries. This revision of PRC-005-2 is intended to capture these devices that were not included under the previous definition. The station direct current (dc) supply normally consists of two components: the battery charger and the station battery itself. There are also emerging technologies that provide a source of dc supply that does not include either a battery or charger.

Battery Charger - The battery charger is supplied by an available ac source. At a minimum, the battery charger must be sized to charge the battery (after discharge) and supply the constant dc load. In many cases, it may be sized also to provide sufficient dc current to handle the higher energy requirements of tripping breakers and switches when actuated by the protective relays in the Protection System.

Station Battery - Station batteries provide the dc power required for tripping and for supplying normal dc power to the station in the event of loss of the battery charger. There are several technologies of battery that require unique forms of maintenance as established in Table 1-4.

Emerging Technologies - Station dc supplies are currently being developed that use other energy storage technologies beside the station battery to prevent loss of the station dc supply when ac power is lost. Maintenance of these station dc supplies will require different kinds of tests and inspections. Table 1-4 presents maintenance activities and maximum allowable testing intervals for these new station dc supply technologies. However, because these technologies are relatively new the maintenance activities for these station dc supplies may change over time.

What did the PSMT SDT mean by "continuity" of the dc supply?

The PSMT SDT recognizes that there are several technological advances in equipment and testing procedures that allow the owner to choose how to verify that a battery string is free of open circuits. The term "continuity" was introduced into the Standard to allow the owner to choose how to verify continuity of a battery set by various methods, and not to limit the owner to the two methods recommended in the IEEE standards. Continuity as used in Table 1-4 of the Standard refers to verifying that there is a continuous current path from the positive terminal of the station battery set to the negative terminal. Without verifying continuity of a station battery, there is no way to determine that the station battery is available to supply dc power to the station. An open battery string will be an unavailable power source in the event of loss of the battery charger.

The current path through a station battery from its positive to its negative connection to the dc control circuits is composed of two types of elements. These path elements are the electrochemical path through each of its cells and all of the internal and external metallic connections and terminations of the batteries in the battery set. If there is loss of continuity (an open circuit) in any part of the electrochemical or metallic path the battery set will not be available for service. In the event of the loss of the ac source or battery charger, the battery must be capable of supplying dc current, both for continuous dc loads and for tripping breakers and switches. Without continuity, the battery cannot perform this function.
At generating stations and large transmission stations where battery chargers are capable of handling the maximum current required by the Protection System, there are still problems that could potentially occur when the continuity through the connected battery is interrupted.

- Many battery chargers produce harmonics which can cause failure of dc power supplies in microprocessor based protective relays and other electronic devices connected to station dc supply. In these cases, the substation battery serves as a filter for these harmonics. With the loss of continuity in the battery, the filter provided by the battery is no longer present.

- Loss of electrical continuity of the station battery will cause, regardless of the battery charger's output current capability, a delayed response in full output current from the charger. Almost all chargers have an intentional 1 to 2 second delay to switch from a low substation dc load current to the maximum output of the charger. This delay would cause the opening of circuit breakers to be delayed which could violate system performance standards.

Monitoring of the station dc supply voltage will not indicate that there is a problem with the dc current path through the battery unless the battery charger is taken out of service. At that time a break in the continuity of the station battery current path will be revealed because there will be no voltage on the station dc circuitry. This particular test method, while proving battery continuity, may not be acceptable to all installations.

Although the Standard prescribes what must be accomplished during the maintenance activity it does not prescribe how the maintenance activity should be accomplished. There are several methods that can be used to verify the electrical continuity of the battery. These are not the only possible methods, simply a sampling of some methods:

- One method is to measure that there is current flowing through the battery itself by a simple clamp on milliamp-range ammeter. A battery is always either charging or discharging. Even when a battery is charged there is still a measurable float charge current that can be detected to verify that there is continuity in the electrical path through the battery.

- A simple test for continuity is to remove the battery charger from service and verify that the battery provides voltage and current to the dc system. However, the behavior of the various dc-supplied equipment in the station should be considered before using this approach.

- Manufacturers of microprocessor controlled battery chargers have developed methods for their equipment to periodically (or continuously) test for battery continuity For example, one manufacturer periodically reduces the float voltage on the battery until current from the battery to the dc load can be measured to confirm continuity.

- Applying test current (as in some ohmic testing devices, or devices for locating dc grounds) will provide a current that when measured elsewhere in the string, will prove that the circuit is continuous.

- Internal ohmic measurements of the cells and units of Lead Acid Batteries (VRLA & VLA) can detect lack of continuity within the cells of a battery string and when used in conjunction with resistance measurements of the battery's external connections can prove continuity. Also some methods of taking internal ohmic measurements by their very nature can prove the continuity of a battery string without having to use the results of resistance measurements of the external connections.

- Specific Gravity tests can infer continuity because without continuity there could be no charging occurring and if there is no charging then Specific Gravity will go down below acceptable levels.

No matter how the electrical continuity of a battery set is verified it is a necessary maintenance activity that must be performed at the intervals prescribed by Table 1-4 to insure that the station dc supply has a path that can provide the required current to the Protection System at all times.

When should I check the station batteries to see if they have sufficient energy to perform as designed?

The answer to this question depends on the type of battery (Valve-Regulated Lead-Acid, Vented Lead-Acid, or Nickel-Cadmium), and the maintenance activity chosen.

For example, if you have a Valve-Regulated Lead-Acid (VRLA) station battery, and you have chosen to evaluate the measured cell/unit internal ohmic values to the battery cell's baseline, you will have to perform verification at a maximum maintenance interval of no greater than every six months. While this interval might seem to be quite short, keep in mind that the 6 month interval is consistent with IEEE guidelines for VRLA batteries; this interval provides an accumulation of data that better shows when a VRLA battery is no longer capable of its design capacity.

If, for a VRLA station battery, you choose to conduct a performance capacity test on the entire station battery as the maintenance activity, then you will have to perform verification at a maximum maintenance interval of no greater than every 3 calendar years.

How is a baseline established for cell/unit internal ohmic measurements?

Establishment of cell/unit internal ohmic baseline measurements should be completed when lead acid batteries are newly installed. To ensure that the baseline ohmic cell/unit values are most indicative of the station batteries ability to perform as designed they should be made upon installation of the station battery and the completion of a performance test of the battery's capacity.

When internal ohmic measurements are taken, consistent test equipment should be used to establish the baseline and used for the future trending of the cells internal ohmic measurements because of variances in test equipment and the type of ohmic measurement used by different manufacturer's equipment. Keep in mind that one manufacturer's "Conductance" test equipment does not produce similar results as another manufacturer's "Impedance" test equipment even though both manufacturers have produced "Ohmic" test equipment.

For all new installations of Valve-Regulated Lead-Acid (VRLA) batteries and Vented Lead-Acid (VLA) batteries, where trending of the cells internal ohmic measurements to a baseline are to be used to determine the ability of the station battery to perform as designed, the establishment of the baseline as described above should be followed at the time of installation to insure the most accurate trending of the cell/unit. However, often for older VRLA batteries the owners of the station batteries have not established a baseline at installation. Also for owners of VLA batteries who want to establish a maintenance activity which requires trending of measured ohmic values to a baseline, there was typically no baseline established at installation of the station battery to trend to.

To resolve the problem of the unavailability of baseline internal ohmic measurements for the individual cell/unit of a station battery, many manufacturers of internal ohmic measurement devices have established libraries of baseline values for VRLA and VLA batteries using their testing device. Also several of the battery manufacturers have libraries of baselines for their products that can be used to trend to. However it is important that when using battery manufacturer supplied data that it is verified that the baseline readings to be used were taken with the same ohmic testing device that will be used for future measurements (for example "Conductance Readings" from one manufacturer's test equipment do not correlate to "Impedance Readings" from a different manufacturer's test equipment).

Although many manufacturers may have provided base line values which will allow trending of the internal ohmic measurements over the remaining life of a station battery, these baselines are not the actual cell/unit measurements for the battery being trended. It is important to have a baseline tailored to the station battery to more accurately use the tool of ohmic measurement trending. That more customized baseline can only be created by following the establishment of a baseline for each cell/unit at the time of installation of the station battery.

Why determine the State of Charge?

Even though there is no present requirement to check the state of charge of a battery, it can be a very useful tool in determining the overall condition of a battery system. The following discussions are offered as a general reference.

When a battery is fully charged the battery is available to deliver its existing capacity. As a battery is discharged its ability to deliver its maximum available capacity is diminished. It is necessary to determine if the state of charge has dropped to an unacceptable level.

IEEE Standards 450, 1188, and 1106 for Vented Lead-Acid (VLA), Valve-Regulated Lead-Acid (VRLA), and Nickel-Cadmium (NiCd) batteries respectively discuss state of charge in great detail in their standards or annexes to their standards. The above IEEE standards are excellent sources for describing how to determine state of charge of the battery system.

What is State of Charge and how can it be determined in a station battery?
The state of charge of a battery refers to the ratio of residual capacity at a given instant to the maximum capacity available from the battery. When a battery is fully charged the battery is available to deliver its existing capacity. As a battery is discharged its ability to deliver its maximum available capacity is diminished. Knowing the amount of energy left in a battery compared with the energy it had when it was fully charged gives the user an indication of how much longer a battery will continue to perform before it needs recharging.

For Vented Lead-Acid (VLA) batteries which use accessible liquid electrolyte, a hydrometer can be used to test the specific gravity of each cell as a measure of its state of charge. The hydrometer depends on measuring changes in the weight of the active chemicals. As the battery discharges the active electrolyte, sulphuric acid, is consumed and the concentration of the sulphuric acid in water is reduced. This in turn reduces the specific gravity of the solution in direct proportion to the state of charge. The actual specific gravity of the electrolyte can therefore be used as an indication of the state of charge of the battery. Hydrometer readings may not tell the whole story, as it takes a while for the acid to get mixed up in the cells of a VLA battery. If measured right after charging, you might see high specific gravity readings at the top of the cell, even though it is much less at the bottom. Conversely if taken shortly after adding water to the cell the specific gravity readings near the top of the cell will be lower than those at the bottom.

Nickel-Cadmium batteries, where the specific gravity of the electrolyte does not change during battery charge and discharge, and Valve-Regulated Lead-Acid (VRLA) batteries, where the electrolyte is not accessible, cannot have their state of charge determined by specific gravity readings. For these two types of batteries and also for VLA batteries, where another method besides taking hydrometer readings is desired, the state of charge may be determined by using the battery charger and taking voltage and current readings during float and equalize (high-rate charge mode). This method is an effective means of determining when the state of charge is low and when it is approaching a fully charged condition which gives the assurance that the available battery capacity will be maximized.

Why determine the Connection Resistance?
High connection resistance can cause abnormal voltage drop or excessive heating during discharge of a station battery. During periods of a high rate of discharge of the station battery a very high resistance can cause severe damage. The maintenance requirement to verify battery

terminal connection resistance in Table 1-4 is established to verify that the integrity of all battery electrical connections is acceptable. This verification includes cell-to-cell (intercell) and external circuit terminations.

Adequacy of the electrical terminations can be determined by comparing resistance measurements for all connections taken at the time of station battery's installation to the same resistance measurements taken at the maintenance interval chosen not to exceed the maximum maintenance interval of Table 1-4. Trending of the interval measurements to the baseline measurements will identify any degradation in the battery connections. When the connection resistance values exceed the acceptance criteria for the connection, the connection is typically disassembled, cleaned, reassembled and measurements taken to verify that the measurements are adequate when compared to the baseline readings.

IEEE Standard 450 for Vented Lead-Acid (VLA) batteries "informative" annex F, and IEEE Standard 1188 for Valve-Regulated Lead-Acid (VRLA) batteries "informative" annex D provide excellent information and examples on performing connection resistance measurements using a microohmmeter and connection detail resistance measurements. Although this information is contained in standards for lead acid batteries the information contained is applicable to Nickel-Cadmium batteries also.

What conditions should be inspected for visible battery cells?

The maintenance requirement to inspect the cell condition of all station battery cells where the cells are visible is a maintenance requirement of Table 1-4. Station batteries are different from any other component in the Protection Station because they are a perishable product due to the electrochemical process which is used to produce dc electrical current and voltage. This inspection is a detailed visual inspection of the cells for abnormalities that occur in the aging process of the cell. In VLA battery visual inspections, some of the things that the inspector is typically looking for on the plates are signs of sulfation of the plates, abnormal color (possible copper contamination) and abnormal conditions such as cracked grids. The visual inspection could look for symptoms of hydration that would indicate that the battery has been left in a completely discharged state for a prolonged period. Besides looking at the plates for signs of aging, all internal connections such as the bus bar connection to each plate and the connections to all posts of the battery need to be visually inspected for abnormalities. In a complete visual inspection for the condition of the cell the cell plates, separators and sediment space of each cell must be looked at for signs of deterioration. An inspection of the station battery's cell condition also includes looking at all terminal posts and cell-to-cell electric connections to ensure they are corrosion free. The case of the battery containing the cell or cells must be inspected for cracks and electrolyte leaks through cracks and the post seals.

This maintenance activity cannot be extended beyond the maximum maintenance interval of Table 1-4 by a Performance-Based Maintenance Program (PBM) because of the electrochemical aging process of the station battery nor can there be any monitoring associated with it because there must be a visual inspection involved in the activity. A remote visual inspection could possibly be done, but its interval must be no greater than the maximum maintenance interval of Table 1-4.

Why consider the ability of the station battery to perform as designed?
Determining the ability of a station battery to perform as designed is critical in the process of determining when the station battery must be replaced or when an individual cell or battery unit must be removed or replaced. For lead acid batteries the ability to perform as designed can be determined in more than one manner.

The two acceptable methods for proving that a station lead acid battery can perform as designed are based on two different philosophies. The first maintenance activity requires tests and evaluation of the internal ohmic measurements on each of the individual cells/units of the station battery to determine that each component can perform as designed and therefore the entire station battery can be verified to perform as designed. The second activity requires a capacity discharge test of the entire station battery to verify that degradation of one or several components (cells) in the station battery has not deteriorated to a point where the total capacity of the station battery system falls below its designed rating.

The first maintenance activity listed in Table 1-4 for verifying that a station battery can perform as designed uses maximum maintenance intervals for evaluating internal ohmic measurements in relation to their baseline measurements that are based on industry experience, EPRI technical reports and application guides, and the IEEE battery standards. By evaluating the internal ohmic measurements for each cell and comparing that measurement to the cell's baseline ohmic measurement low-capacity cells can be identified and eliminated or the whole station battery replaced to keep the station battery capable of performing as designed. Since the philosophy behind internal ohmic measurement evaluation is based on the fact that each battery component must be verified to be able to perform as designed, the interval for verification by this maintenance activity must be shorter to catch individual cell/unit degradation.

It should be noted that even if a lead acid battery unit is composed of multiple cells where the ohmic measurement of each cell cannot be taken, the ohmic test can still be accomplished. The data produced becomes trending data on the multi-cell unit instead of trending individual cells. Care must be taken in the evaluation of the ohmic measures of entire units to detect a bad cell that has a poor ohmic value. Good ohmic values of other cells in the same battery unit can make it harder to detect the poor ohmic measurement of a bad cell because the only ohmic measurement available is of all the cells in the battery unit.

This first maintenance activity is applicable only for Vented Lead-Acid (VLA) and Valve-Regulated Lead-Acid (VRLA) batteries; this trending activity has not shown to be effective for NiCd batteries thus the only choices for owners of NiCd batteries are the performance tests of the second activity (see applicable IEEE guideline for specifics on performance tests).

The second maintenance activity listed in Table 1-4 for verifying that a station battery can perform as designed uses maximum maintenance intervals for capacity testing that were designed to align with the IEEE battery standards. This maintenance activity is applicable for Vented Lead-Acid, Valve-Regulated Lead-Acid, and Nickel-Cadmium batteries.
The maximum maintenance interval for discharge capacity testing is longer than the interval for testing and evaluation of internal ohmic cell measurements. An individual component of a

station battery may degrade to an unacceptable level without causing the total station battery to fall below its designed rating under capacity testing.

IEEE Standards 450, 1188, and 1106 for vented lead-acid (VLA), Valve-Regulated Lead-Acid (VRLA), and Nickel-Cadmium (NiCd) batteries respectively (which together are the most commonly used substation batteries on the BES) go into great detail about capacity testing of the entire battery set to determine that a battery can perform as designed or needs to be replaced soon.

Why in Table 1-4 of PRC-005-2 is there a maintenance activity to inspect the structural intergrity of the battery rack?
The three IEEE standards (1188, 450, and 1106) for VRLA, Vented Lead-Acid, and Nickel-Cadmium batteries all recommend that as part of any battery inspection the battery rack should be inspected. The purpose of this inspection is to verify that the battery rack is correctly installed and has no deterioration that could weaken its structural integrity.
Because the battery rack is specifically designed for the battery that is mounted on it, weakening of its structural members by rust or corrosion can physically jeopardize the battery.

What is required to comply with the "Unintentional dc Grounds" requirement?
In most cases, the first ground that appears on a battery is not a problem. It is the unintentional ground that appears on the opposite pole that becomes problematic. Even then many systems are designed to operate favorably under some unintentional DC ground situations. It is up to the owner of the Protection System to determine if corrective actions are needed on detected unintentional DC grounds. The Standard merely requires that a check be made for the existence of Unintentional DC Grounds. Obviously a "check-off" of some sort will have to be devised by the inspecting entity to document that a check is routinely done for Unintentional DC Grounds because of the possible consequences to the Protection System.

Where the Standard refers to "all cells" is it sufficient to have a documentation method that refers to "all cells" or do we need to have separate documentation for every cell? For example do I need 60 individual documented check-offs for good electrolyte level or would a single check-off per bank be sufficient?
A single check-off per battery bank is sufficient for documentation, as long as the single check-off attests to checking all cells/units.

Does this Standard refer to Station batteries or all batteries, for example Communications Site Batteries?
This Standard refers to Station Batteries. The drafting team does not believe that the scope of this Standard refers to communications sites. The batteries covered under PRC-005-2 are the batteries that supply the trip current to the trip coils of the interrupting devices that are a part of the Protection System. The SDT believes that a loss of power to the communications systems at a remote site would cause the communications systems associated with protective relays to alarm at the substation. At this point the corrective actions can be initiated.

My VRLA batteries have multiple-cells within an individual battery jar (or unit); how am I expected to comply with the cell-to-cell ohmic measurement requirements on these units that I cannot get to?

Measurement of cell/unit (not all batteries allow access to "individual cells" some "units" or jars may have multiple cells within a jar) internal ohmic values of all types of lead acid batteries where the cells of the battery are not visible is a station dc supply maintenance activity in Table 1-4.

What are cell/unit internal ohmic measurements?

With the introduction of Valve-Regulated Lead-Acid (VRLA) batteries to station dc supplies in the 1980's several of the standard maintenance tools that are used on Vented Lead-Acid (VLA) batteries were unable to be used on this new type of lead-acid battery to determine its state of health. The only tools that were available to give indication of the health of these new VRLA batteries were voltage readings of the total battery voltage, the voltage of the individual cells and periodic discharge tests.

In the search for a tool for determining the health of a VRLA battery several manufacturers studied the electrical model of a lead acid battery's current path through its cell. The overall battery current path consists of resistance and inductive and capacitive reactance. The inductive reactance in the current path through the battery is so minuscule when compared to the huge capacitive reactance of the cells that it is often ignored in most circuit models of the battery cell. Taking the basic model of a battery cell manufacturers of battery test equipment have developed and marketed testing devices to take measurements of the current path to detect degradation in the internal path through the cell.

In the battery industry these various types of measurements are referred to as ohmic measurements. Terms used by the industry to describe ohmic measurements are ac conductance, ac impedance, and dc resistance. They are defined by the test equipment providers and IEEE and refer to the method of taking ohmic measurements of a lead acid battery. For example in one manufacturer's ac conductance equipment measurements are taken by applying a voltage of a known frequency and amplitude across a cell or battery unit and observing the ac current flow it produces in response to the voltage. A manufacturer of an ac impedance meter measures ac current of a known frequency and amplitude that is passed through the whole battery string and determines the impedances of each cell or unit by measuring the resultant ac voltage drop across them. On the other hand dc resistance of a cell is measured by a third manfacturer's equipment by applying a dc load across the cell or unit and measuring the step change in both the voltage and current to calculate the internal dc resistance of the cell or unit.

It is important to note that because of the rapid development of the market for ohmic measurement devices there were no standards developed or used to mandate the test signals used in making ohmic measurements. Manufacturers using proprietary methods and applying different frequencies and magnitudes for their signals have developed a diversity of measurement devices. This diversity in test signals coupled with the three different types of ohmic measurements techniques (impedance conductance and resistance) make it impossible to get the same ohmic measurement for a cell with different ohmic measurement devices. However, IEEE has recognized the great value for choosing one device for ohmic measurement, no matter who

makes it or the method to calculate the ohmic measurement. The only caution given by IEEE and the battery manufacturers is that when trending the cells of a lead acid station battery consistent ohmic measurement devices should be used to establish the baseline measurement and to trend the battery set for its entire life.

For VRLA batteries both IEEE Standard 1188 (Maintenance, Testing and Replacement of VRLA Batteries) and IEEE Standard 1187 (Installation Design and Installation of VRLA Batteries) recognize the importance of the maintenance activity of establishing a baseline for "cell/unit internal ohmic measurements (impedance, conductance and resistance)" and trending them at frequent intervals over the life of the battery. There are extensive discussions about the need for taking these measurements in these standards. IEEE Standard 1188 requires taking internal ohmic values as described in Annex C4 during regular inspections of the station battery. For VRLA batteries IEEE Standard 1188 in talking about the necessity of establishing a base line and trending it over time says, "depending on the degree of change a performance test, cell replacement or other corrective action may be necessary.

For VLA batteries IEEE Standard 484 (Installation of VLA batteries) gives several guidelines about establishing baseline measurements on newly installed lead acid stationary batteries. The standard also discusses the need to look for significant changes in the ohmic measurements, the caution that measurement data will differ with each type of model of instrument used, and lists a number of factors that affect ohmic measurements.

At the beginning of the 21st century EPRI conducted a series of extensive studies to determine the relationship of internal ohmic measurements to the capacity of a lead acid battery cell. The studies indicated that internal ohmic measurements were in fact a good indicator of a lead acid battery cell's capacity but because users often were only interested in the total station battery capacity and the technology does not precisely predict overall battery capacity, if a user only needs "an accurate measure of the overall battery capacity" they should "perform a battery capacity test."

Prior to the EPRI studies some large and small companies which owned and maintained station dc supplies in NERC Protection Systems developed maintenance programs where trending of ohmic measurements of cells/units of the station's battery became the maintenance activity for determining if the station battery could perform as designed. By evaluation of the trending of the ohmic measurements over time the owner could track the performance of the individual components of the station battery and determine if a total station battery or components of it required capacity testing, removal, replacement or in many instances replacement of the entire station battery. By taking this approach these owners have eliminated having to perform capacity testing at prescribed intervals to determine if a battery needs to be replaced and are still able to effectively determine if a station battery can perform as designed.

Why verify voltage?

There are two required maintenance activities associated with verification of dc voltages in Table 1-4. These two required activities are to verify station dc supply voltage and float voltage of the

battery charger, and have different maximum maintenance intervals. Both of these voltage verification requirements relate directly to the battery charger maintenance.

The verification of the dc supply voltage is simply an observation of battery voltage to prove that the charger has not been lost or is not malfunctioning. Low battery voltage below float voltage indicates that the battery may be on discharge and if not corrected the station battery could discharge down to some extremely low value that will not operate the Protection System. High voltage, close to or above the maximum allowable dc voltage for equipment connected to the station dc supply indicates the battery charger may be malfunctioning by producing high dc voltage levels on the Protection System. If corrective actions are not taken to bring the high voltage down, the dc power supplies and other electronic devices connected to the station dc supply may be damaged. The maintenance activity of verifying the float voltage of the battery charger is not to prove that a charger is lost or producing high voltages on the station dc supply, but rather to prove that the charger is properly floating the battery within the proper voltage limits.

Why check for the electrolyte level?

In Vented Lead-Acid (VLA) and Nickel-Cadmium (NiCd) batteries the visible electrolyte level must be checked as one of the required maintenance activities that must be performed at an interval that is equal to or less than the maximum maintenance interval of Table 1-4. Because the electrolyte level in Valve-Regulated Lead-Acid (VRLA) batteries cannot be observed there is no maintenance activity listed in Table 1-4 of the Standard for checking the electrolyte level. Low electrolyte level of any cell of a VLA or NiCd station battery is a condition requiring correction. Typically the electrolyte level should be returned to an acceptable level for both types of batteries (VLA and NiCd) by adding distilled or other approved-quality water to the cell.

Often people confuse the interval for watering all cells required due to evaporation of the electrolyte in the station battery cells with the maximum maintenance interval required to check the electrolyte level. In many of the modern station batteries the jar containing the electrolyte is so large with the band between the high and low electrolyte level so wide that normal evaporation which would require periodic watering of all cells takes several years to occur. However, because loss of electrolyte due to cracks in the jar, overcharging of the station battery or other unforeseen events can cause rapid loss of electrolyte the shorter maximum maintenance intervals for checking the electrolyte level are required. A low level of electrolyte in a VLA battery cell which exposes the tops of the plates can cause the exposed portion of the plates to accelerated sulfation resulting in loss of cell capacity. Also, in a VLA battery where the electrolyte level goes below the end of the cell withdrawal tube or filling funnel, gasses can exit the cell by the tube instead of the flame arrester and present an explosion hazard.

Why does it appear that there are two maintenance activities in Table 1-4(b) (for VRLA batteries) that appear to be the same activity and have the same maximum maintenance interval?

There are two different and distinct reasons for doing almost the same maintenance activity at the same interval for Valve-Regulated Lead-Acid (VRLA) batteries. The first similar activity for VRLA batteries (Table 1-4(b)) that has the same maximum maintenance interval is to "measure battery cell/unit internal ohmic values." Part of the reason for this activity is because the visual inspection of the cell condition is unavailable for VRLA batteries. Besides the requirement to

measure the internal ohmic measurements of VRLA batteries to determine the internal health of the cell, the maximum maintenance interval for this activity is significantly shorter than the interval for Vented Lead-Acid (VLA) due to some unique failure modes for VRLA batteries. Some of the potential problems that VRLA batteries are susceptible to that do not affect VLA batteries are thermal runaway, cell dry-out, and cell reversal when one cell has a very low capacity.

The other similar activity listed in Table 1-4(b) is “verify that the station battery can perform as designed by evaluating the measured cell/unit internal ohmic values to station battery baseline.” This activity allows an owner the option to choose between this activity with its much shorter maximum maintenance interval or the longer maximum maintenance interval for the maintenance activity to “Verify that the station battery can perform as designed by conducting a performance, service, or modified performance capacity test of the entire battery bank.”

For VRLA batteries, there are two drivers for internal ohmic readings. The first driver is for a means to trend battery life. A comparison and trending against the baseline new battery ohmic reading can be used in lieu of capacity tests to determine remaining battery life. Remaining battery life is analogous to stating that the battery is still able to "perform as designed". This is the intent of the “capacity 6 month test” at Row 4 on Table 1-4b.

The second big driver is VRLA batteries tendency for thermal runaway. This is the intent of the “thermal runaway test” at Row 2 on Table 1-4b. In order to detect a cell in thermal runaway, you need not have a formal trending program to track when a cell has reached a 25% increase over baseline. Rather it will stick out like a sore thumb when compared to the other cells in a string at a given point in time regardless of the age of all the cells in a string. In other words, if the battery is 10 years old and all the cells are gradually approaching a 25% increase in ohmic values over baseline, then you have a battery which is approaching end of life. You need to get ready to buy a new battery but you do not have to worry about an impending catastrophic failure. On the other hand, if the battery is five years old and you have one cell that has a markedly different ohmic reading than all the other cells, then you need to be worried that this cell is in thermal runaway and catastrophic failure is imminent.

If an entity elects to use a capacity test rather than a cell ohmic value trending program, this does not eliminate the need to be concerned about thermal runaway – the entity still needs to do the 6 month readings and look for cells which are outliers in the string but they need not trend results against the factory/as new baseline. Some entities will not mind the extra administrative burden of having the ongoing trending program against baseline - others would rather just do the capacity test and not have to trend the data against baseline. Nonetheless, all entities must look for ohmic outliers on a 6 month basis.

It is possible to accomplish both tasks listed (trend testing for capacity and testing for thermal runaway candidates) with the very same ohmic test. It becomes an analysis exercise of watching the trend from baselines and watching for the oblique cell measurement.

15.5 Associated communications equipment (Table 1-2)

The equipment used for tripping in a communications assisted trip scheme is a vital piece of the trip circuit. Remote action causing a local trip can be thought of as another parallel trip path to the trip coil that must be tested.

Besides the trip output and wiring to the trip coil(s) there is also a communications medium that must be maintained.
Newer technologies now exist that achieve communications-assisted tripping without the conventional wiring practices of older technology.

For example: older technologies may have included *Frequency Shift Key* methods. This technology requires that guard and trip levels be maintained.

The actual tripping path(s) to the trip coil(s) may be tested as a parallel trip path within the dc control circuitry tests.

Emerging technologies transfer digital information over a variety of carrier mediums that are then interpreted locally as trip signals.

The requirements apply to the communicated signal needed for the proper operation of the protective relay trip logic or scheme. Therefore this Standard is applied to equipment used to convey both trip signals (permissive or direct) and block signals.

It was the intent of this Standard to require that a test be performed on any communications-assisted trip scheme regardless of the vintage of technology.The essential element is that the tripping (or blocking) occurs locally when the remote action has been asserted; or that the tripping (or blocking) occurs remotely when the local action is asserted. Note that the required testing can still be done within the concept of testing by overlapping segments. Associated communications equipment can be (but is not limited to) testing at other times and different frequencies as the protective relays, the individual trip paths and the affected circuit interrupting devices.

Some newer installations utilize digital signals over fiber-optics from the protective relays in the control house to the circuit interrupting device in the yard. This method of tripping the circuit breaker, even though it might be considered communications, must be maintained per the dc control circuitry maintenance requirements.

15.5.1 Frequently Asked Questions:

What are some examples of mechanisms to check communications equipment functioning?
For unmonitored Protection Systems, various types of communications systems will have different facilities for on-site integrity checking to be performed at least every three months during a substation visit. Some examples are, but not limited to:

- On-off power-line carrier systems can be checked by performing a manual carrier keying test between the line terminals, or carrier check-back test from one terminal.

- Systems which use frequency-shift communications with a continuous guard signal (over a telephone circuit, analog microwave system, etc.) can be checked by observing for a loss-of-guard indication or alarm. For frequency-shift power-line carrier systems, the guard signal level meter can also be checked.
- Hard-wired pilot wire line Protection Systems typically have pilot-wire monitoring relays that give an alarm indication for a pilot wire ground or open pilot wire circuit loop.
- Digital communications systems typically have a data reception indicator or data error indicator (based on loss of signal, bit error rate, or frame error checking).

For monitored Protection Systems, various types of communications systems will have different facilities for monitoring the presence of the communications channel, and activating alarms that can be monitored remotely. Some examples are, but not limited to:

- On-off power-line carrier systems can be shown to be operational by automated periodic power-line carrier check-back tests, with remote alarming of failures.
- Systems which use a frequency-shift communications with a continuous guard signal (over a telephone circuit, analog microwave system, etc.) can be remotely monitored with a loss-of-guard alarm or low signal level alarm.
- Hard-wired pilot wire line Protection Systems can be monitored by remote alarming of pilot-wire monitoring relays.
- Digital communications systems can activate remotely monitored alarms for data reception loss or data error indications.
- Systems can be queried for the data error rates.

For the highest degree of monitoring of Protection Systems, the communications system must monitor all aspects of the performance and quality of the channel that show it meets the design performance criteria, including monitoring of the channel interface to protective relays.

- In many communications systems signal quality measurements including signal-to-noise ratio, received signal level, reflected transmitter power or standing wave ratio, propagation delay, and data error rates are compared to alarm limits. These alarms are connected for remote monitoring.
- Alarms for inadequate performance are remotely monitored at all times, and the alarm communications system to the remote monitoring site must itself be continuously monitored to assure that the actual alarm status at the communications equipment location is continuously being reflected at the remote monitoring site.

What is needed for the 3-month inspection of communications-assisted trip scheme equipment?

The 3-month inspection applies to unmonitored equipment. An example of compliance with this requirement might be, but is not limited to:

With each site visit, check that the equipment is free from alarms, check any metered signal levels, and that power is still applied. While this might be explicit for a particular type of equipment (i.e. FSK equipment), the concept should be that the entity verify that the communications equipment that is used in a Protection System is operable through a cursory inspection and site visit. This site visit can be eliminated on this particular example if the FSK equipment had a monitored alarm on Loss of Guard. Blocking carrier systems with auto checkbacks will present an alarm when the channel fails allowing a visual indication. With no auto checkback, the channel integrity will need to be verified by a manual checkback or a two ended signal check. This check could also be eliminated by bring the auto checkback failure alarm to the monitored central location.

Does a fiber optic I/O scheme used for breaker tripping or control within a station, for example - transmitting a trip signal or control logic between the control house and the breaker control cabinet, constitute a communications system?

This equipment is presently classified as being part of the Protection System Control Circuitry and tested per the portions of Table 1 applicable to Protection System Control Circuitry rather than those portions of the table applicable to communications equipment.

In Table 1-2, the Maintenance Activities section of the Protective System Communications Equipment and Channels refers to the quality of the channel meeting "performance criteria". What is meant by performance criteria?

Protection System communications channels must have a means of determining if the channel and communications equipment is operating normally. If the channel is not operating normally an alarm will be indicated. For unmonitored systems this alarm will probably be on the panel. For monitored systems, the alarm will be transmitted to a remote location.

Each entity will have established a nominal performance level for each protective system communications channel that is consistent with proper functioning of the Protection System. If that level of nominal performance is not being met, the system will go into alarm. Following are some examples of protective system communications channel performance measuring:

- For direct transfer trip using a frequency shift power line carrier channel, a guard level monitor is part of the equipment. A normal receive level is established when the system is calibrated and if the signal level drops below an established level, the system will indicate an alarm.
- An on-off blocking signal over power line carrier is used for directional comparison blocking schemes on transmission lines. During a fault, block logic is sent to the remote relays by turning on a local transmitter and sending the signal over the power line to a receiver at the remote end. This signal is normally off so continuous levels cannot be checked. These schemes use check-back testing to determine channel performance. A predetermined signal sequence is sent to the remote end and the remote end decodes this signal and sends a signal sequence back. If the sending end receives the correct information from the remote terminal, the test passes and no alarm is indicated. Full power and reduced power tests are typically run. Power levels for these tests are determined at the time of calibration.

- Pilot wire relay systems use a hardwire communications circuit to communicate between the local and remote ends of the protective zone. This circuit is monitored by circulating a dc current between the relay systems. A typical level may be 1 mA. If the level drops below the setting of the alarm monitor, the system will indicate an alarm.
- Modern digital relay systems use data communications to transmit relay information to the remote end relays. An example of this is a line current differential scheme commonly used on transmission lines. The protective relays communicate current magnitude and phase information over the communications path to determine if the fault is located in the protective zone. Quantities such as digital packet loss, bit error rate and channel delay are monitored to determine the quality of the channel. These limits are determined and set during relay commissioning. Once set, any channel quality problems that fall outside the set levels will indicate an alarm.

The previous examples show how some protective relay communications channels can be monitored and how the channel performance can be compared to performance criteria established by the entity. This Standard does not state what the performance criteria will be; it just requires that the entity establish nominal criteria so protective system channel monitoring can be performed.

How is the performance criteria of Protection System communications equipment involved in the maintenance program?
An entity determines the acceptable performance criteria depending on the technology implemented. If the communications channel performance of a Protection System varies from the pre-determined performance criteria for that system then these results should be investigated and resolved.

How do I verify the A/D converters of microprocessor-based relays?
There are a variety of ways to do this. Two examples would be: using values gathered via data communications and automatically comparing these values with values from other sources, or using groupings of other measurements (such as vector summation of bus feeder currents) for comparison. Many other methods are possible.

15.6 Alarms (Table 2)

In addition to the tables of maintenance for the components of a Protection System, there is an additional table added for alarms. This additional table was added for clarity. This enabled the common alarm attributes to be consolidated into a single spot and thus make it easier to read the Tables 1-1 through 1-5. The alarms need to arrive at a site wherein a corrective action can be initiated. This could be a control room, operations center, etc. The alarming mechanism can be a Standard alarming system or an auto-polling system, the only requirement is that the alarm be brought to the action-site within 24 hours. This effectively makes manned-stations equivalent to monitored stations. The alarm of a monitored point (for example a monitored trip path with a lamp) in a manned-station now makes that monitored point eligible for monitored status. Obviously, these same rules apply to a non-manned-station, which is that if the monitored point

has an alarm that is auto-reported to the operations center (for example) within 24 hours then it too is considered monitored.

15.6.1 Frequently Asked Question:

Why are there activities defined for varying degrees of monitoring a Protection System component when that level of technology may not yet be available?
There may already be some equipment available that is capable of meeting the highest levels of monitoring criteria listed in the Tables. However, even if there is no equipment available today that can meet this level of monitoring the Standard establishes the necessary requirements for when such equipment becomes available. By creating a roadmap for development, this provision makes the Standard technology-neutral. The Standard Drafting Team wants to avoid the need to revise the Standard in a few years to accommodate technology advances that may be coming to the industry.

Does a fail-safe "form b" contact that is alarmed to a 24/7 operation center classify as an alarm path with monitoring?
If the fail-safe "form-b" contact that is alarmed to a 24/7 operation center causes the alarm to activate for failure of any portion of the alarming path from the alarm origin to the 24/7 operations center then this can be classified as an alarm path with monitoring.

~~15.7~~15.7 Distributed UFLS and UVLS Systems (Table 3)

Distributed UFLS and UVLS Systems have their maintenance activities documented in Table 3 due to their distributed nature allowing reduced maintenance activities and extended maximum maintenance intervals. Relays have the same maintenance activities and intervals as Table 1-1. Voltage and current sensing devices have the same maintenance activity and interval as Table 1-2. DC systems need only have their voltage read at the relay every twelve years. Control circuits have the following maintenance activities every twelve years:

- Verify the trip path between the relay and lock-out and/or auxiliary tripping device(s).
- Verify operation of any lock-out and/or auxiliary tripping device(s) used in the trip circuit.
- No verification of trip path required between the lock-out and/or auxiliary tripping device(s).
- No verification of trip path required between the relay and trip coil for circuits that have no lock-out and/or auxiliary tripping device(s).
- No verification of trip coil required.

No maintenance activity is required for associated communication systems for distributed UFLS/UVLS schemes.

Non-BES interrupting devices that participate in a distributed UFLS or UVLS scheme are excluded from the tripping requirement, and part of the control circuit test requirement; however the part of the trip path control circuitry between the load shed relay and lock-out or auxiliary

tripping relay must be tested at least once every 12 years. In the case where there is no lock-out or auxiliary tripping relay used in a distributed UFLS or UVLS scheme which is not part of the BES, there is no control circuit test requirement. There are many circuit interrupting devices in the distribution system that will be operating for any given under-frequency event that requires tripping for that event. A failure in the tripping-action of a single distributed system circuit breaker (or non-BES equipment interruption device) will be far less significant than, for example, any single Transmission Protection System failure such as a failure of a bus differential lock-out relay. While many failures of these distributed system circuit breakers (or non-BES equipment interruption device) could add up to be significant, it is also believed that many circuit breakers are operated often on just fault clearing duty and therefore these circuit breakers are operated at least as frequently as any requirements that appear in this Standard.

15.8 Examples of Evidence of Compliance

To comply with the requirements of this Standard an entity will have to document and save evidence. The evidence can be of many different forms. The Standard Drafting Team recognizes that there are concurrent evidence requirements of other NERC Standards that could, at times, fulfill evidence requirements of this Standard.

15.~~7~~8.1 Frequently Asked Questions:

What forms of evidence are acceptable?

Acceptable forms of evidence, as relevant for the Requirement being documented, include but are not limited to:

- Process documents or plans
- Data (such as relay settings sheets, photos, SCADA, and test records)
- Database lists, records and/or screen shots that demonstrate compliance information
- Prints, diagrams and/or schematics
- Maintenance records
- Logs (operator, substation, and other types of log)
- Inspection forms
- Mail, memos, or email proving the required information was exchanged, coordinated, submitted or received
- Check-off forms (paper or electronic)
- Any record that demonstrates that the maintenance activity was known, accounted for, and/or performed.

If I replace a failed Protection System component with another component, what testing do I need to perform on the new component?
In order to reset the Table 1 maintenance interval for the replacement component, all relevant Table 1 activities for the component should be performed.

I have evidence to show compliance for PRC-016 ("Special Protection System Misoperation"). Can I also use it to show compliance for this Standard, PRC-005-2?
Maintaining evidence for operation of Special Protection Systems could concurrently be utilized as proof of the operation of the associated trip coil (provided one can be certain of the trip coil involved). Thus the reporting requirements that one may have to do for the Misoperation of a Special Protection Scheme under PRC-016 could work for the activity tracking requirements under this PRC-005-2.

I maintain disturbance records which show Protection System operations. Can I use these records to show compliance?
These records can be concurrently utilized as dc trip path verifications to the degree that they demonstrate the proper function of that dc trip path.

I maintain test reports on some of my components of my Protection System components. Can I use these test reports to show that I have verified a maintenance activity?
Yes.

16. References

1. Protection System Maintenance: A Technical Reference. Prepared by the System Protection and Controls Task Force of the NERC Planning Committee. Dated September 13, 2007.

2. "Predicating The Optimum Routine test Interval For Protection Relays," by J. J. Kumm, M.S. Weber, D. Hou, and E. O. Schweitzer, III, IEEE Transactions on Power Delivery, Vol. 10, No. 2, April 1995.

3. "Transmission Relay System Performance Comparison For 2000, 2001, 2002, 2003, 2004 and 2005," Working Group I17 of Power System Relaying Committee of IEEE Power Engineering Society, May 2006.

4. "A Survey of Relaying Test Practices," Special Report by WG I11 of Power System Relaying Committee of IEEE Power Engineering Society, September 16, 1999.

5. "Transmission Protective Relay System Performance Measuring Methodology," Working Group I3 of Power System Relaying Committee of IEEE Power Engineering Society, January 2002.

6. "Processes, Issues, Trends and Quality Control of Relay Settings," Working Group C3 of Power System Relaying Committee of IEEE Power Engineering Society, December 2006.

7. "Proposed Statistical Performance Measures for Microprocessor-Based Transmission-Line Protective Relays, Part I - Explanation of the Statistics, and Part II - Collection and Uses of Data," Working Group D5 of Power System Relaying Committee of IEEE Power Engineering Society, May 1995; Papers 96WM 016-6 PWRD and 96WM 127-1 PWRD, 1996 IEEE Power Engineering Society Winter Meeting.

8. "Analysis And Guidelines For Testing Numerical Protection Schemes," Final Report of CIGRE WG 34.10, August 2000.

9. "Use of Preventative Maintenance and System Performance Data to Optimize Scheduled Maintenance Intervals," H. Anderson, R. Loughlin, and J. Zipp, Georgia Tech Protective Relay Conference, May 1996.

PSMT SDT References

10. "Essentials of Statistics for Business and Economics" Anderson, Sweeney, Williams, 2003

11. "Introduction to Statistics and Data Analysis" - Second Edition, Peck, Olson, Devore, 2005

12. "Statistical Analysis for Business Decisions" Peters, Summers, 1968

Figures

Figure 1: Typical Transmission System

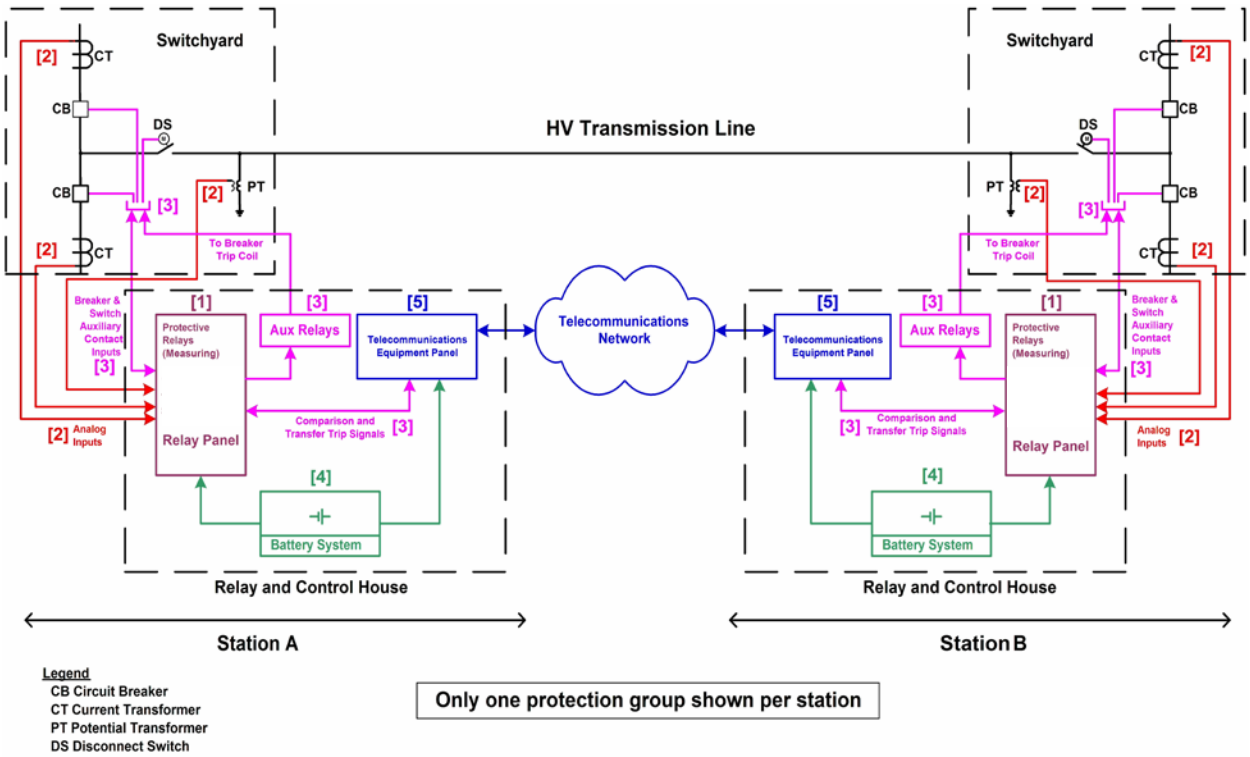

For information on components, see ***Figure 1 & 2 Legend – Components of Protection Systems***

Figure 2: Typical Generation System

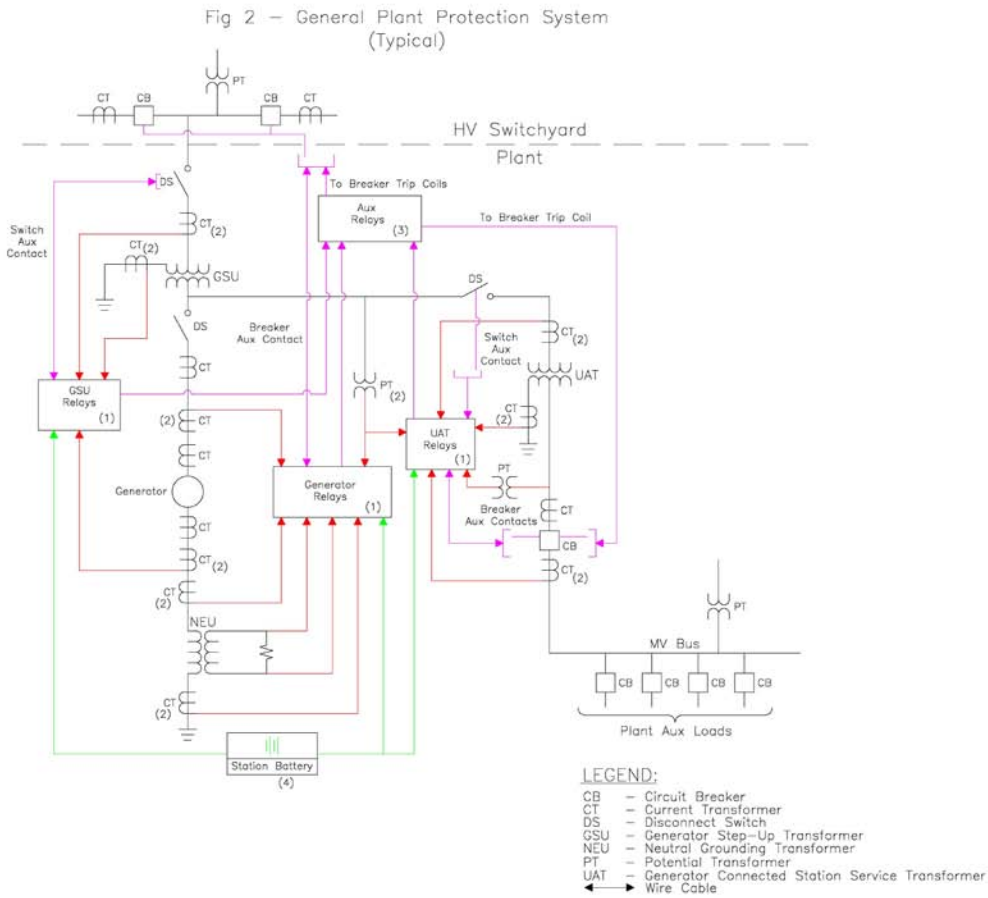

For information on components, see ***Figure 1 & 2 Legend – Components of Protection Systems***

Figure 1 & 2 Legend – Components of Protection Systems

Number in Figure	Component of Protection System	Includes	Excludes
1	Protective relays which respond to electrical quantities	All protective relays that use current and/or voltage inputs from current & voltage sensors and that trip the 86, 94 or trip coil.	Devices that use non-electrical methods of operation including thermal, pressure, gas accumulation, and vibration. Any ancillary equipment not specified in the definition of Protection Systems. Control and/or monitoring equipment that is not a part of the automatic tripping action of the Protection System
2	Voltage and current sensing devices providing inputs to protective relays	The signals from the voltage & current sensing devices to the protective relay input.	Voltage & current sensing devices that are not a part of the Protection System, including sync-check systems, metering systems and data acquisition systems.
3	Control circuitry associated with protective functions	All control wiring (or other medium for conveying trip signals) associated with the tripping action of 86 devices, 94 devices or trip coils (from all parallel trip paths). This would include fiber-optic systems that carry a trip signal as well as hard-wired systems that carry trip current.	Closing circuits, SCADA circuits, other devices in control scheme not passing trip current
4	Station dc supply	Batteries and battery chargers and any control power system which has the function of supplying power to the protective relays, associated trip circuits and trip coils.	Any power supplies that are not used to power protective relays or their associated trip circuits and trip coils.
5	Communications systems necessary for correct operation of protective functions	Tele-protection equipment used to convey specific information, in the form of analog or digital signals, necessary for the correct operation of protective functions.	Any communications equipment that is not used to convey information necessary for the correct operation of protective functions.

Additional information can be found in References

Appendix A

The following illustrates the concept of overlapping verifications and tests as summarized in Section 10 of the paper. As an example, Figure A-1 shows protection for a critical transmission line by carrier blocking directional comparison pilot relaying. The goal is to verify the ability of the entire two-terminal pilot protection scheme to protect for line faults, and to avoid over-tripping for faults external to the transmission line zone of protection bounded by the current transformer locations.

Figure A-1

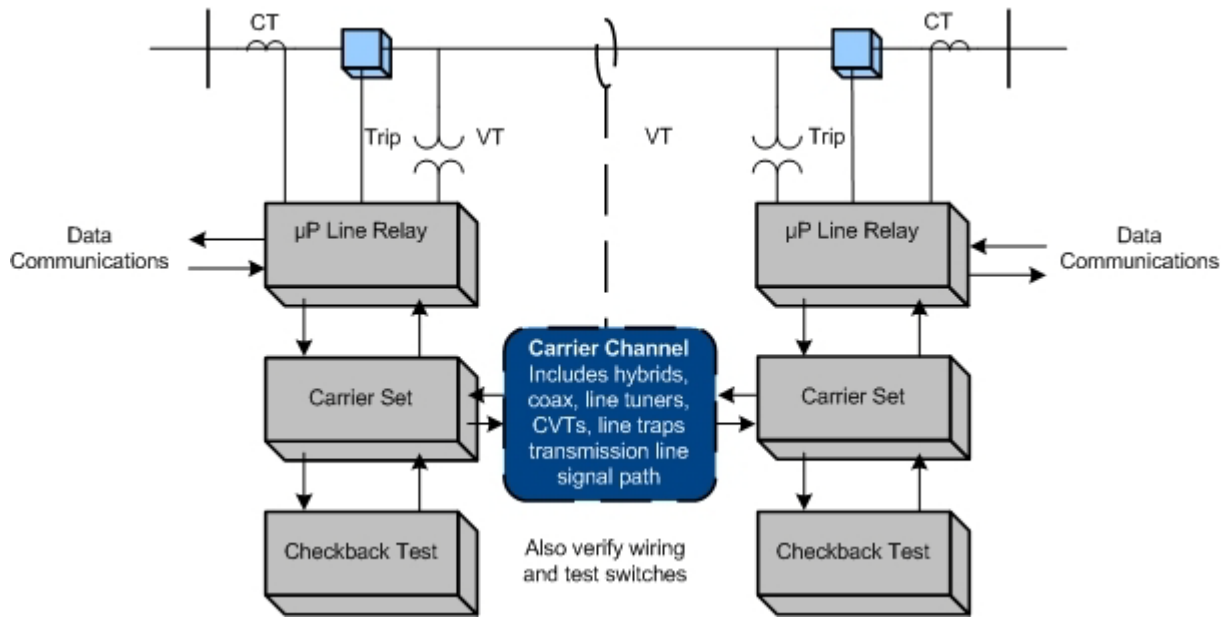

In this example (Figure A1), verification takes advantage of the self-monitoring features of microprocessor multifunction line relays at each end of the line. For each of the line relays themselves, the example assumes that the user has the following arrangements in place:

1. The relay has a data communications port that can be accessed from remote locations.
2. The relay has internal self-monitoring programs and functions that report failures of internal electronics, via communications messages or alarm contacts to SCADA.
3. The relays report loss of dc power, and the relays themselves or external monitors report the state of the dc battery supply.
4. The CT and PT inputs to the relays are used for continuous calculation of metered values of volts, amperes, plus Watts and VARs on the line. These metered values are reported by data communications. For maintenance, the user elects to compare these readings to those of other relays, meters, or DFRs. The other readings may be from redundant relaying or measurement systems or they may be derived from values in other protection zones. Comparison with other such readings to within required relaying accuracy verifies Voltage & Current Sensing Devices, wiring, and analog signal input processing of the relays. One effective way to do this is to utilize the

relay metered values directly in SCADA, where they can be compared with other references or state estimator values.

5. Breaker status indication from auxiliary contacts is verified in the same way as in (2). Status indications must be consistent with the flow or absence of current.
6. Continuity of the breaker trip circuit from dc bus through the trip coil is monitored by the relay and reported via communications.
7. Correct operation of the on-off carrier channel is also critical to security of the Protection System, so each carrier set has a connected or integrated automatic checkback test unit. The automatic checkback test runs several times a day. Newer carrier sets with integrated checkback testing check for received signal level and report abnormal channel attenuation or noise, even if the problem is not severe enough to completely disable the channel.

These monitoring activities plus the check-back test comprise automatic verification of all the Protection System elements that experience tells us are the most prone to fail. But, does this comprise a complete verification?

Figure A-2

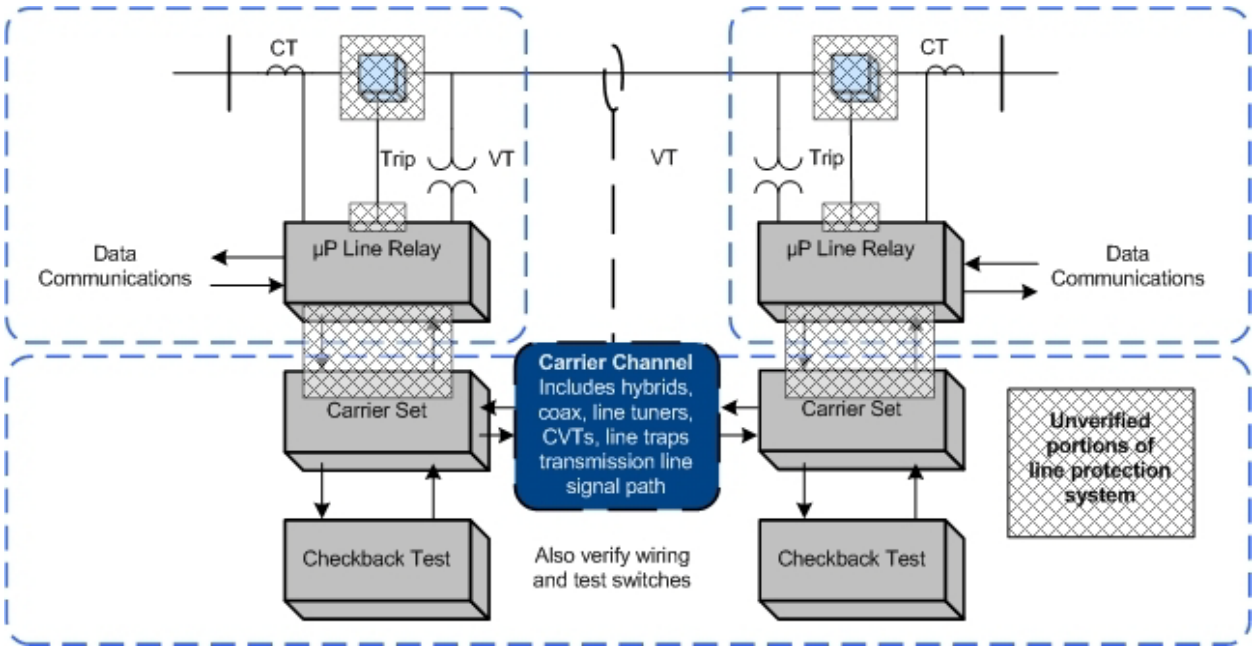

The dotted boxes of Figure A-2 show the sections of verification defined by the monitoring and verification practices just listed. These sections are not completely overlapping, and the shaded regions show elements that are not verified:

1. The continuity of trip coils is verified, but no means is provided for validating the ability of the circuit breaker to trip if the trip coil should be energized.
2. Within each line relay, all the microprocessors that participate in the trip decision have been verified by internal monitoring. However, the trip circuit is actually energized by the contacts of a small telephone-type "ice cube" relay within the line protective relay. The microprocessor energizes the coil of this ice cube relay through its output data port and a transistor driver circuit. There is no monitoring of the output port, driver circuit, ice cube relay, or contacts of that relay. These components are critical for tripping the circuit breaker for a fault.
3. The check-back test of the carrier channel does not verify the connections between the relaying microprocessor internal decision programs and the carrier transmitter keying circuit or the carrier receiver output state. These connections include microprocessor I/O ports, electronic driver circuits, wiring, and sometimes telephone-type auxiliary relays.
4. The correct states of breaker and disconnect switch auxiliary contacts are monitored, but this does not confirm that the state change indication is correct when the breaker or switch opens.

A practical solution for (1) and (2) is to observe actual breaker tripping, with a specified maximum time interval between trip tests. Clearing of naturally-occurring faults are demonstrations of operation that reset the time interval clock for testing of each breaker tripped in this way. If faults do not occur, manual tripping of the breaker through the relay trip output via data communications to the relay microprocessor meets the requirement for periodic testing.

PRC-005 does not address breaker maintenance, and its Protection System test requirements can be met by energizing the trip circuit in a test mode (breaker disconnected) through the relay microprocessor. This can be done via a front-panel button command to the relay logic, or application of a simulated fault with a relay test set. However, utilities have found that breakers often show problems during Protection System tests. It is recommended that Protection System verification include periodic testing of the actual tripping of connected circuit breakers.

Testing of the relay-carrier set interface in (3) requires that each relay key its transmitter, and that the other relay demonstrate reception of that blocking carrier. This can be observed from relay or DFR records during naturally occurring faults, or by a manual test. If the checkback test sequence were incorporated in the relay logic, the carrier sets and carrier channel are then included in the overlapping segments monitored by the two relays, and the monitoring gap is completely eliminated.

Appendix B — Protection System Maintenance Standard Drafting Team

Charles W. Rogers
Chairman
Consumers Energy Co.

John B. Anderson
Xcel Energy

Merle E. Ashton
Tri-State G&T

Corporation
Bob Bentert
Florida Power & Light Company

John Ciufo
Hydro One Inc

Sam Francis
Oncor

Carol A. Gerou
Midwest Reliability Organization

William D. Shultz
Southern Company Generation

Russell C. Hardison
Tennessee Valley Authority

David Harper
NRG Texas Maintenance Services

Mark Lucas
ComEd

Al McMeekin
NERC Staff
North American Electric Reliability

Mark Peterson
Great River Energy

Leonard Swanson, Jr
National Grid USA

Eric A. Udren
Quanta Technology

Philip B. Winston
Southern Company Transmission

John A. Zipp
ITC Holdings

NERC
NORTH AMERICAN ELECTRIC RELIABILITY CORPORATION

Mapping Document Showing Translation of PRC-005-1 – Transmission and Generation Protection System Maintenance and Testing, PRC-008-0- Implementation and Documentation of Underfrequency Load Shedding Equipment Maintenance Program, PRC-011-0 - Undervoltage Load Shedding System Maintenance and Testing, and PRC-017-0 - Special Protection System Maintenance and Testing into PRC-005-2 – Protection System Maintenance

Standard: PRC-005-1 - Transmission and Generation Protection System Maintenance and Testing		
Requirement in Approved Standard	**Translation to New Standard or Other Action**	**Proposed Language in PRC-005-2 – Protection System Maintenance Or Comment**
R1. Each Transmission Owner and any Distribution Provider that owns a transmission Protection System and each Generator Owner that owns a generation Protection System shall have a Protection System maintenance and testing program for Protection Systems that affect the reliability of the BES. The program shall include:	PRC-005-2, R1	**R1.** Each Transmission Owner, Generator Owner, and Distribution Provider shall establish a Protection System Maintenance Program (PSMP) for its Protection Systems designed to provide protection for BES Element(s). The PSMP shall: *[Violation Risk Factor: Medium] [Time Horizon: Long Term Planning]* **1.1.** Address all Protection System component types. **1.2.** Identify which maintenance method (time-based, performance-based (per PRC-005 Attachment A), or a combination) is used to address each Protection System component type. All batteries associated with the station dc supply component type of a Protection System shall be included in a time-based program as described in Table 1-4 and Table 3. **1.3.** Identify the associated maintenance intervals for time-based programs, to be no less frequent than the intervals established in Table 1-1 through 1-5, Table 2, and Table 3. **1.4.** Include all applicable monitoring attributes and related maintenance activities applied to each Protection System component type consistent with the maintenance intervals specified in Tables 1-1 through 1-5, Table 2, and Table3.

Standard: PRC-005-1 - Transmission and Generation Protection System Maintenance and Testing		
Requirement in Approved Standard	**Translation to New Standard or Other Action**	**Proposed Language in PRC-005-2 – Protection System Maintenance Or Comment**
R1.1. Maintenance and testing intervals and their basis. R1.2. Summary of maintenance and testing procedures.	PRC-005-2, Tables 1-1 through 1-5 and Table 2.	See Tables 1-1 through 1-5 and Table 2. The Tables establish prescribed maximum intervals and minimum maintenance activities.
R2. Each Transmission Owner and any Distribution Provider that owns a transmission Protection System and each Generator Owner that owns a generation Protection System shall provide documentation of its Protection System maintenance and testing program and the implementation of that program to its Regional Reliability Organization on request (within 30 calendar days). The documentation of the program implementation shall include:	PRC-005-2, R3	**R3**. Each Transmission Owner, Generator Owner, and Distribution Provider shall implement and follow its PSMP and initiate resolution of any unresolved maintenance issues.
R2.1. Evidence Protection System devices were maintained and tested within the defined intervals. R2.2. Date each Protection System device was last tested/maintained.	PRC-005-2, M3	**M3**. Each Transmission Owner, Generator Owner, and Distribution Provider shall have evidence that it has implemented the Protection System Maintenance Program and initiated resolution of unresolved maintenance issues in accordance with Requirement R3, which may include but is not limited to dated maintenance records, dated maintenance summaries, dated check-off lists, dated inspection records, or dated work orders.

Standard: PRC-008-0 - Implementation and Documentation of Underfrequency Load Shedding Equipment Maintenance Program		
Requirement in Approved Standard	**Translation to New Standard or Other Action**	**Comments**
R1. The Transmission Owner and Distribution Provider with a UFLS program (as required by its Regional Reliability Organization) shall have a UFLS equipment maintenance and testing program in place. This UFLS equipment maintenance and testing program shall include UFLS equipment identification, the schedule for UFLS equipment testing, and the schedule for UFLS equipment maintenance.	PRC-005-2, R1, R2, R3, and Applicability 4.2.2 Tables 1-1 – 1-5 and Table 3	See PRC-005-2. Each Transmission Owner and Distribution Provider that owns an underfrequency load-shedding system, (UFLS) as established by Regional underfrequency load-shedding requirements, shall establish and document a Protection System maintenance program for that underfrequency load-shedding system. The program may be time-based, performance-based, or a combination thereof, and must address all Protection System components that are used within the underfrequency load shedding system. Batteries must be maintained via a time-based program.
R2. The Transmission Owner and Distribution Provider with a UFLS program (as required by its Regional Reliability Organization) shall implement its UFLS equipment maintenance and testing program and shall provide UFLS maintenance and testing program results to its Regional Reliability Organization and NERC on request (within 30 calendar days).	PRC-005-2, R3	**R3**. Each Transmission Owner, Generator Owner, and Distribution Provider shall implement and follow its PSMP and initiate resolution of any unresolved maintenance issues. Each Transmission Owner and Distribution Provider that owns an underfrequency load-shedding system, (UFLS) as established by Regional underfrequency load-shedding requirements, shall establish and document a Protection System maintenance program for that underfrequency load-shedding system. The program may be time-based, performance-based, or a combination thereof, and must address all Protection System components that are used within the underfrequency load shedding system. Batteries must be maintained via a time-based program.

Standard: PRC-011-0 - Undervoltage Load Shedding System Maintenance and Testing		
Requirement in Approved Standard	**Translation to New Standard or Other Action**	**Comments**
R1. The Transmission Owner and Distribution Provider that owns a UVLS system shall have a UVLS equipment maintenance and testing program in place. This program shall include: **R1.1.** The UVLS system identification which shall include but is not limited to: **R1.1.1.** Relays. **R1.1.2.** Instrument transformers. **R1.1.3.** Communications systems, where appropriate. **R1.1.4.** Batteries. **R1.2.** Documentation of maintenance and testing intervals and their basis. **R1.3.** Summary of testing procedure. **R1.4.** Schedule for system testing. **R1.5.** Schedule for system maintenance. **R1.6.** Date last tested/maintained.	PRC-005-2, R1, R2, R3, and Applicability 4.2.3 Tables 1-1 through 1-5, Table 2, and Table 3.	See PRC-005-2. Each Transmission Owner and Distribution Provider that owns an undervoltage load-shedding system, (UVLS) installed to prevent system voltage collapse or voltage instability for Bulk Electric System reliability, shall establish and document a Protection System Maintenance program for that undervoltage load-shedding system. The program may be time-based, performance-based, or a combination thereof, and must address all components that are used within the undervoltage load shedding system. Batteries must be maintained via a time-based program.
R2. The Transmission Owner and Distribution Provider that owns a UVLS system shall provide documentation of its UVLS equipment maintenance and testing program and the implementation of that UVLS equipment maintenance and testing program to its Regional Reliability Organization and NERC on request (within 30 calendar days).	PRC-005-2, M3	**M3**. Each Transmission Owner, Generator Owner, and Distribution Provider shall have evidence that it has implemented the Protection System Maintenance Program and initiated resolution of unresolved maintenance issues in accordance with Requirement R3, which may include but is not limited to dated maintenance records, dated maintenance summaries, dated check-off lists, dated inspection records, or dated work orders.

Standard: PRC-017-0 - Special Protection System Maintenance and Testing		
Requirement in Approved Standard	**Translation to New Standard or Other Action**	**Comments**
R1. The Transmission Owner, Generator Owner, and Distribution Provider that owns an SPS shall have a system maintenance and testing program(s) in place. The program(s) shall include: **R1.1.** SPS identification shall include but is not limited to: **R1.1.1.** Relays. **R1.1.2.** Instrument transformers. **R1.1.3.** Communications systems, where appropriate. **R1.1.4.** Batteries. **R1.2.** Documentation of maintenance and testing intervals and their basis. **R1.3.** Summary of testing procedure. **R1.4.** Schedule for system testing. **R1.5.** Schedule for system maintenance. **R1.6.** Date last tested/maintained.	PRC-005-2, R1, R2, R3, and Applicability 4.2.4 Tables 1-1 through 1-5 and Table 2.	See PRC-005-2. Each Transmission Owner, Generator Owner, and Distribution Provider that owns a Special Protection System, or portion thereof, for Bulk Electric System reliability shall establish and document a Protection System Maintenance program for their portion of that Special Protection System. The program may be time-based, performance-based, or a combination thereof, and must address all components that are used within the Special Protection System. Batteries must be maintained according to the time-based program.
R2. The Transmission Owner, Generator Owner, and Distribution Provider that owns an SPS shall provide documentation of the program and its implementation to the appropriate Regional Reliability Organizations and NERC on request (within 30 calendar days).	PRC-005-2, M3	**M3**. Each Transmission Owner, Generator Owner, and Distribution Provider shall have evidence that it has implemented the Protection System Maintenance Program and initiated resolution of unresolved maintenance issues in accordance with Requirement R3, which may include but is not limited to dated maintenance records, dated maintenance summaries, dated check-off lists, dated inspection records, or dated work orders.

NERC
NORTH AMERICAN ELECTRIC RELIABILITY CORPORATION

Unofficial Comment Form for 1st Draft of the Standard for Protection System Maintenance and Testing Project 2007-17

Please **DO NOT** use this form. Please use the electronic comment form to submit comments on the 1st draft of the PRC-005-2 standard for Protection System Maintenance and Testing. Comments must be submitted by **September 28, 2011.** If you have questions please contact Al McMeekin at al.mcmeekin@nerc.net or by telephone at 803-530-1963.

http://www.nerc.com/filez/standards/Protection_System_Maintenance_Project_2007-17.html

Background Information:
This project recently failed to receive two-thirds weighted stakeholder approval on recirculation ballot. The Standards Committee directed that the Standard Drafting Team post the SAR and standard for a 45-day comment period with an initial ballot conducted during the last 10 days. During the posting period, the Standard Drafting Team plans to conduct a Webinar to discuss recently-presented industry comments and how they are addressed in the draft standard.

The Protection System Maintenance and Testing Standard Drafting Team (PSMT SDT) has made several changes to the fifth posting of PRC-005-2 based on comments received from industry. The changes include:

- Revising the term, "Maintenance Correctable Issue" to "Unresolved Maintenance Issue".
- Revising the "3 calendar months" interval for various station dc supply and communications system maintenance activities to "4 calendar months".
- The maintenance activities and intervals for distributed UFLS and UVLS systems were extracted from Table 1-1 through 1-5 and placed into a new Table 3 to more clearly illustrate the requirements related to these systems, which are often implemented on the distribution system.
- Modifying the VSLs and VRFs to reflect the changes listed above.
- Revising the Supplemental Reference and FAQ document to reflect changes made to the draft standard and to address additional issues raised within comments.
- Revising the Implementation Plan.

The PSMT SDT would like to receive industry comments on this standard.

For questions 1-5, please provide specific comments related to the individual question. Please reserve question 6 for general comments not related to questions 1-5.

1. Do you have any comments regarding the existing SAR for this project?

   ☐ Yes
   ☐ No

Comments:

2. In response to comments, the term "Maintenance Correctable Issue" was revised to "Unresolved Maintenance Issue". Do you agree with this change? If you do not agree, please provide specific suggestions for improvement.

   ☐ Yes

   ☐ No

   Comments:

3. In response to comments, the SDT revised the previous "3 calendar months" interval to "4 calendar months" for communications systems and station dc supply. Do you agree with this change? If you do not agree, please provide specific suggestions for improvement.

   ☐ Yes

   ☐ No

   Comments:

4. The SDT extracted the maintenance activities and intervals for distributed UFLS and UVLS systems from Table 1-1 through 1-5 and placed them into a new Table 3 to more clearly illustrate the requirements related to these systems. Do you agree with this change? If you do not agree, please provide specific suggestions for improvement.

   ☐ Yes

   ☐ No

   Comments:

5. The SDT has revised the "Supplementary Reference" document which is supplied to provide supporting discussion for the Requirements within the standard. Do you agree with the changes? If not, please provide specific suggestions for change.

   ☐ Yes

   ☐ No

   Comments:

6. If you have any other comments on this Standard that you **have not already provided in response to the prior questions**, please provide them here.

   Comments:

A. Introduction

1. Title: **Transmission and Generation Protection System Maintenance and Testing**

2. Number: PRC-005-1

3. Purpose: To ensure all transmission and generation Protection Systems affecting the reliability of the Bulk Electric System (BES) are maintained and tested.

4. Applicability

4.1. Transmission Owner.

4.2. Generator Owner.

4.3. Distribution Provider that owns a transmission Protection System.

5. Effective Date: May 1, 2006

B. Requirements

R1. Each Transmission Owner and any Distribution Provider that owns a transmission Protection System and each Generator Owner that owns a generation Protection System shall have a Protection System maintenance and testing program for Protection Systems that affect the reliability of the BES. The program shall include:

R1.1. Maintenance and testing intervals and their basis.

R1.2. Summary of maintenance and testing procedures.

R2. Each Transmission Owner and any Distribution Provider that owns a transmission Protection System and each Generator Owner that owns a generation Protection System shall provide documentation of its Protection System maintenance and testing program and the implementation of that program to its Regional Reliability Organization on request (within 30 calendar days). The documentation of the program implementation shall include:

R2.1. Evidence Protection System devices were maintained and tested within the defined intervals.

R2.2. Date each Protection System device was last tested/maintained.

C. Measures

M1. Each Transmission Owner and any Distribution Provider that owns a transmission Protection System and each Generator Owner that owns a generation Protection System that affects the reliability of the BES, shall have an associated Protection System maintenance and testing program as defined in Requirement 1.

M2. Each Transmission Owner and any Distribution Provider that owns a transmission Protection System and each Generator Owner that owns a generation Protection System that affects the reliability of the BES, shall have evidence it provided documentation of its associated Protection System maintenance and testing program and the implementation of its program as defined in Requirement 2.

D. Compliance

1. Compliance Monitoring Process

1.1. Compliance Monitoring Responsibility

Regional Reliability Organization.

1.2. Compliance Monitoring Period and Reset Time Frame

One calendar year.

1.3. Data Retention

The Transmission Owner and any Distribution Provider that owns a transmission Protection System and each Generator Owner that owns a generation Protection System, shall retain evidence of the implementation of its Protection System maintenance and testing program for three years.

The Compliance Monitor shall retain any audit data for three years.

1.4. Additional Compliance Information

The Transmission Owner and any Distribution Provider that owns a transmission Protection System and the Generator Owner that owns a generation Protection System, shall each demonstrate compliance through self-certification or audit (periodic, as part of targeted monitoring or initiated by complaint or event), as determined by the Compliance Monitor.

2. Levels of Non-Compliance

2.1. Level 1: Documentation of the maintenance and testing program provided was incomplete as required in R1, but records indicate maintenance and testing did occur within the identified intervals for the portions of the program that were documented.

2.2. Level 2: Documentation of the maintenance and testing program provided was complete as required in R1, but records indicate that maintenance and testing did not occur within the defined intervals.

2.3. Level 3: Documentation of the maintenance and testing program provided was incomplete, and records indicate implementation of the documented portions of the maintenance and testing program did not occur within the identified intervals.

2.4. Level 4: Documentation of the maintenance and testing program, or its implementation, was not provided.

E. Regional Differences

None identified.

Version History

Version	Date	Action	Change Tracking
0	April 1, 2005	Effective Date	New
1	December 1, 2005	1. Changed incorrect use of certain hyphens (-) to “en dash” (–) and “em dash (—).” 2. Added “periods” to items where appropriate. 3. Changed “Timeframe” to “Time Frame” in item D, 1.2.	01/20/05

A. Introduction

1. Title: **Implementation and Documentation of Underfrequency Load Shedding Equipment Maintenance Program**

2. Number: PRC-008-0

3. Purpose: Provide last resort system preservation measures by implementing an Under Frequency Load Shedding (UFLS) program.

4. Applicability:

4.1. Transmission Owner required by its Regional Reliability Organization to have a UFLS program

4.2. Distribution Provider required by its Regional Reliability Organization to have a UFLS program

5. Effective Date: April 1, 2005

B. Requirements

R1. The Transmission Owner and Distribution Provider with a UFLS program (as required by its Regional Reliability Organization) shall have a UFLS equipment maintenance and testing program in place. This UFLS equipment maintenance and testing program shall include UFLS equipment identification, the schedule for UFLS equipment testing, and the schedule for UFLS equipment maintenance.

R2. The Transmission Owner and Distribution Provider with a UFLS program (as required by its Regional Reliability Organization) shall implement its UFLS equipment maintenance and testing program and shall provide UFLS maintenance and testing program results to its Regional Reliability Organization and NERC on request (within 30 calendar days).

C. Measures

M1. Each Transmission Owner's and Distribution Provider's UFLS equipment maintenance and testing program contains the elements specified in Reliability Standard PRC-007-0_R1.

M2. Each Transmission Owner and Distribution Provider shall have evidence that it provided the results of its UFLS equipment maintenance and testing program's implementation to its Regional Reliability Organization and NERC on request (within 30 calendar days).

D. Compliance

1. Compliance Monitoring Process

1.1. Compliance Monitoring Responsibility

Compliance Monitor: Regional Reliability Organization.

1.2. Compliance Monitoring Period and Reset Timeframe

On request (within 30 calendar days).

1.3. Data Retention

None specified.

1.4. Additional Compliance Information

None.

2. Levels of Non-Compliance

2.1. Level 1: Documentation of the maintenance and testing program was incomplete, but records indicate implementation was on schedule.

2.2. Level 2: Complete documentation of the maintenance and testing program was provided, but records indicate that implementation was not on schedule.

2.3. Level 3: Documentation of the maintenance and testing program was incomplete, and records indicate implementation was not on schedule.

2.4. Level 4: Documentation of the maintenance and testing program, or its implementation was not provided.

E. Regional Differences

1. None identified.

Version History

Version	Date	Action	Change Tracking
0	April 1, 2005	Effective Date	New

A. Introduction

1. Title: **Undervoltage Load Shedding System Maintenance and Testing**

2. Number: PRC-011-0

3. Purpose: Provide system preservation measures in an attempt to prevent system voltage collapse or voltage instability by implementing an Undervoltage Load Shedding (UVLS) program.

4. Applicability:

4.1. Transmission Owner that owns a UVLS system

4.2. Distribution Provider that owns a UVLS system

5. Effective Date: April 1, 2005

B. Requirements

R1. The Transmission Owner and Distribution Provider that owns a UVLS system shall have a UVLS equipment maintenance and testing program in place. This program shall include:

R1.1. The UVLS system identification which shall include but is not limited to:

R1.1.1. Relays.

R1.1.2. Instrument transformers.

R1.1.3. Communications systems, where appropriate.

R1.1.4. Batteries.

R1.2. Documentation of maintenance and testing intervals and their basis.

R1.3. Summary of testing procedure.

R1.4. Schedule for system testing.

R1.5. Schedule for system maintenance.

R1.6. Date last tested/maintained.

R2. The Transmission Owner and Distribution Provider that owns a UVLS system shall provide documentation of its UVLS equipment maintenance and testing program and the implementation of that UVLS equipment maintenance and testing program to its Regional Reliability Organization and NERC on request (within 30 calendar days).

C. Measures

M1. Each Transmission Owner and Distribution Provider that owns a UVLS system shall have documentation that its UVLS equipment maintenance and testing program conforms with Reliability Standard PRC-011-0_R1.

M2. Each Transmission Owner and Distribution Provider that owns a UVLS system shall have evidence it provided documentation of its UVLS equipment maintenance and testing program and the implementation of that UVLS equipment maintenance and testing program as specified in Reliability Standard PRC-011-0_R2.

D. Compliance

1. Compliance Monitoring Process

1.1. Compliance Monitoring Responsibility

Compliance Monitor: Regional Reliability Organization.

1.2. Compliance Monitoring Period and Reset Timeframe

On request (30 calendar days).

1.3. Data Retention

None specified.

1.4. Additional Compliance Information

None.

2. Levels of Non-Compliance

2.1. Level 1: Documentation of the maintenance and testing program was incomplete, but records indicate implementation was on schedule.

2.2. Level 2: Documentation of the maintenance and testing program was incomplete, but records indicate implementation was on schedule.

2.3. Level 3: Documentation of the maintenance and testing program was incomplete, and records indicate implementation was not on schedule.

2.4. Level 4: Documentation of the maintenance and testing program, or its implementation, was not provided.

E. Regional Differences

1. None identified.

Version History

Version	Date	Action	Change Tracking
0	April 1, 2005	Effective Date	New

A. Introduction

1. Title: **Special Protection System Maintenance and Testing**

2. Number: PRC-017-0

3. Purpose: To ensure that all Special Protection Systems (SPS) are properly designed, meet performance requirements, and are coordinated with other protection systems. To ensure that maintenance and testing programs are developed and misoperations are analyzed and corrected.

4. Applicability:

4.1. Transmission Owner that owns an SPS

4.2. Generator Owner that owns an SPS

4.3. Distribution Provider that owns an SPS

5. Effective Date: April 1, 2005

B. Requirements

R1. The Transmission Owner, Generator Owner, and Distribution Provider that owns an SPS shall have a system maintenance and testing program(s) in place. The program(s) shall include:

R1.1. SPS identification shall include but is not limited to:

R1.1.1. Relays.

R1.1.2. Instrument transformers.

R1.1.3. Communications systems, where appropriate.

R1.1.4. Batteries.

R1.2. Documentation of maintenance and testing intervals and their basis.

R1.3. Summary of testing procedure.

R1.4. Schedule for system testing.

R1.5. Schedule for system maintenance.

R1.6. Date last tested/maintained.

R2. The Transmission Owner, Generator Owner, and Distribution Provider that owns an SPS shall provide documentation of the program and its implementation to the appropriate Regional Reliability Organizations and NERC on request (within 30 calendar days).

C. Measures

M1. The Transmission Owner, Generator Owner, and Distribution Provider that owns an SPS shall have a system maintenance and testing program(s) in place that includes all items in Reliability Standard PRC-017-0_R1.

M2. The Transmission Owner, Generator Owner, and Distribution Provider that owns an SPS shall have evidence it provided documentation of the program and its implementation to the appropriate Regional Reliability Organizations and NERC on request (within 30 calendar days).

D. Compliance

1. Compliance Monitoring Process

1.1. Compliance Monitoring Responsibility

Compliance Monitor: Regional Reliability Organization. Each Region shall report compliance and violations to NERC via the NERC Compliance Reporting process.

Timeframe:
On request (30 calendar days.)

1.2. Compliance Monitoring Period and Reset Timeframe

Compliance Monitor: Regional Reliability Organization.

1.3. Data Retention

None specified.

1.4. Additional Compliance Information

None.

2. Levels of Non-Compliance

2.1. Level 1: Documentation of the maintenance and testing program was incomplete, but records indicate implementation was on schedule.

2.2. Level 2: Complete documentation of the maintenance and testing program was provided, but records indicate that implementation was not on schedule.

2.3. Level 3: Documentation of the maintenance and testing program was incomplete, and records indicate implementation was not on schedule.

2.4. Level 4: Documentation of the maintenance and testing program, or its implementation, was not provided.

E. Regional Differences

1. None identified.

Version History

Version	Date	Action	Change Tracking
0	April 1, 2005	Effective Date	New

NERC
NORTH AMERICAN ELECTRIC RELIABILITY CORPORATION

Standards Announcement

Project 2007-17 Protection System Maintenance and Testing
Formal Comment Period Open Aug 15 – Sept 28, 2011
Ballot Pool Window Open Through Sept 14, 2011
Initial Ballot and Non-Binding Poll: Sept 19 – 28, 2011

Now available at:
http://www.nerc.com/filez/standards/Protection_System_Maintenance_Project_2007-17.html

The Standards Committee has authorized posting the SAR for Project 2007-17 Protection System Maintenance and Testing, along with the draft standard PRC-005-2 — Protection System Maintenance and associated implementation plan, for a formal 45-day comment period.

PRC-005-2 was posted for a recirculation ballot that ended June 30, 2011. The standard narrowly failed to achieve ballot pool approval, and in accordance with the Standard Processes Manual, the project has been reinitiated. An initial ballot and concurrent non-binding poll will be conducted during the last 10 days of the 45-day comment period. A new ballot pool is being formed during the first 30-days of the 45-day comment period. Because the project is not new to stakeholders, the Standards Committee has waived the initial 30-day comment period and asked the drafting team to conduct a webinar during the comment period.

Instructions for Joining the New Ballot Pool for Project 2007-17
The ballot pool windows are open through **8 a.m. Eastern on Wednesday, September 14, 2011**.

Registered Ballot Body members may join the ballot pools to be eligible to vote in the upcoming ballot and non-binding poll at the following page: https://standards.nerc.net/BallotPool.aspx

During the pre-ballot window, members of the ballot pool may communicate with one another by using their "ballot pool list server." (Once the balloting begins, ballot pool members are prohibited from using the ballot pool list servers.) The list server for the initial ballot pool is: bp-2007-17_PSMT_IN2_in@nerc.com. The list serve for the non-binding poll is: bp-2007-17_nb_0811_in@nerc.com

Any member who wishes to participate in the non-binding poll of the associated violation risk factor (VRF) and violation severity levels (VSLs) must also join this pool. We have discontinued the practice of automatically populating the ballot pool for the non-binding poll with all those who joined the pool to vote on the standard. Thus, anyone wishing to vote on the standard and also wishes to cast an opinion in the non-binding poll of the VRFs and VSLs must join both ballot pools.

Instructions for Submitting Comments
A formal comment period is open through **8 p.m. Eastern on Wednesday, September 28, 2011.**

Please use this electronic comment form to submit comments. If you experience any difficulties in using the electronic form, please contact Monica Benson at monica.benson@nerc.net.

Documents for this project, including the SAR, a clean copy of PRC-005-2, its Implementation Plan, and Supplemental Reference and FAQ along with an off-line unofficial copy of the questions listed in the comment forms are posted at the following site:
http://www.nerc.com/filez/standards/Protection_System_Maintenance_Project_2007-17.html

Redlines have also been posted showing changes made to the standard, implementation plan, and Supplemental Reference and FAQ since the standard was posted for recirculation ballot in June.

The drafting team considered whether revisions to the SAR were needed but did not revise the SAR, so the SAR that is posted is the same SAR that was posted for comment when Project 2007-17 was first initiated, except that the date has been updated.

Note that PRC-005-2 reflects the merging of the following standards into a single standard, making it impractical to post a redline of proposed PRC-005-2 that shows the changes to the last approved version of the standard.

- PRC-005-1 — Transmission and Generation Protection System Maintenance and Testing
- PRC-008-0 — Underfrequency Load Shedding Equipment Maintenance Program
- PRC-011-0 — UVLS System Maintenance and Testing
- PRC-017-0 — Special Protection System Maintenance and Testing

The last approved versions of PRC-005-1, PRC-008-0, PRC-011-0, and PRC-017-0 have been posted on the project's web page for easy reference at:

http://www.nerc.com/filez/standards/Protection_System_Maintenance_Project_2007-17.html

Next Steps – Webinar, Initial Ballot and Non-binding Poll of VRFs and VSLs

The drafting team plans to conduct a webinar during the comment period to review PRC-005-2 and address questions. Additional details will be announced when they are available.

An initial ballot of the revised standard and its associated implementation plan, and a new non-binding poll of the revised VRFs and VSLs will be conducted during the last 10 days of the comment period, beginning on Monday, September 19 through Wednesday, September 28, 2011.

Project Background

The proposed PRC-005-2 – Protection System Maintenance standard addresses FERC directives from FERC Order 693, as well as issues identified by stakeholders. In accordance with the FERC directives, this draft standard establishes requirements for a time-based maintenance program, where all relevant devices are maintained according to prescribed maximum intervals. It further establishes requirements for a condition-based maintenance program, where the hands-on maintenance intervals are adjusted to reflect the known and reported condition of the relevant devices. For a performance-based maintenance program, it ascertains where the hands-on maintenance intervals are adjusted to reflect the historical performance of the relevant devices.

Standards Development Process

The Standard Processes Manual contains all the procedures governing the standards development process. The success of the NERC standards development process depends on stakeholder participation. We extend our

thanks to all those who participate. For more information or assistance, please contact Monica Benson at monica.benson@nerc.net.

For more information or assistance, please contact Monica Benson, Standards Process Administrator, at monica.benson@nerc.net or at 404-446-2560.

North American Electric Reliability Corporation
116-390 Village Blvd.
Princeton, NJ 08540
609.452.8060 | www.nerc.com

NERC
NORTH AMERICAN ELECTRIC RELIABILITY CORPORATION

Standards Announcement

Project 2007-17 Protection System Maintenance & Testing Initial Ballot Results

Now available at: https://standards.nerc.net/Ballots.aspx

Ballot Results for PRC-005-2 Protection System Maintenance

An initial ballot of PRC-005-2 Protection System Maintenance, and a concurrent non-binding poll of the associated VRFs and VSLs, concluded on September 28, 2011.

Voting statistics for the standard are listed below, and the Ballot Results webpage provides a link to the detailed results.

Quorum: 84.86 %
Approval: 61.10 %

Non-binding Poll Results for Associated VRF and VSLs

Of those who registered to participate, 83.13% provided an opinion or abstention; 68.68% of those who provided an opinion indicated support for the VRFs and VSLs that were proposed.

Next Steps

The drafting team will consider all comments received, and decide whether to make additional revisions to the standards.

Project Background

The proposed PRC-005-2 – Protection System Maintenance standard addresses FERC directives from FERC Order 693, as well as issues identified by stakeholders. In accordance with the FERC directives, this draft standard establishes requirements for a time-based maintenance program, where all relevant devices are maintained according to prescribed maximum intervals. It further establishes requirements for a condition-based maintenance program, where the hands-on maintenance intervals are adjusted to reflect the known and reported condition of the relevant devices. For a performance-based maintenance program, it ascertains where the hands-on maintenance intervals are adjusted to reflect the historical performance of the relevant devices.

PRC-005-2 was posted for a recirculation ballot that ended June 30, 2011. The standard narrowly failed to achieve ballot pool approval, and in accordance with the Standards Processes Manual, the project has been reinitiated. Because the project is not new to stakeholders, the Standards Committee waived

the initial 30-day comment period and directed that the standard be posted for a formal 45-day comment period with an initial ballot conducted during the last ten days of the comment period.

Additional information is available on the project webpage.

Standards Development Process

The Standard Processes Manual contains all the procedures governing the standards development process. The success of the NERC standards development process depends on stakeholder participation. We extend our thanks to all those who participate. For more information or assistance, please contact Monica Benson at monica.benson@nerc.net.

For more information or assistance, please contact Monica Benson, Standards Process Administrator, at monica.benson@nerc.net or at 404-446-2560.

North American Electric Reliability Corporation
116-390 Village Blvd.
Princeton, NJ 08540
609.452.8060 | www.nerc.com

User Name

Password

Log in

Register

-Ballot Pools
-Current Ballots
-Ballot Results
-Registered Ballot Body
-Proxy Voters

Home Page

Ballot Results

Ballot Name:	Project 2007-17 PSMT Initial Ballot September 2011_in
Ballot Period:	9/19/2011 - 9/29/2011
Ballot Type:	Initial
Total # Votes:	314
Total Ballot Pool:	370
Quorum:	**84.86 % The Quorum has been reached**
Weighted Segment Vote:	61.10 %
Ballot Results:	**The standard will proceed to a successive ballot.**

Summary of Ballot Results

Segment	Ballot Pool	Segment Weight	Affirmative # Votes	Affirmative Fraction	Negative # Votes	Negative Fraction	Abstain # Votes	No Vote
1 - Segment 1.	90	1	50	0.658	26	0.342	2	12
2 - Segment 2.	6	0.5	3	0.3	2	0.2	1	0
3 - Segment 3.	98	1	41	0.5	41	0.5	3	13
4 - Segment 4.	30	1	17	0.63	10	0.37	0	3
5 - Segment 5.	80	1	40	0.667	20	0.333	2	18
6 - Segment 6.	47	1	23	0.561	18	0.439	0	6
7 - Segment 7.	0	0	0	0	0	0	0	0
8 - Segment 8.	11	0.7	3	0.3	4	0.4	1	3
9 - Segment 9.	2	0.1	1	0.1	0	0	0	1
10 - Segment 10.	6	0.6	5	0.5	1	0.1	0	0
Totals	**370**	**6.9**	**183**	**4.216**	**122**	**2.684**	**9**	**56**

Individual Ballot Pool Results

Segment	Organization	Member	Ballot	Comments
1	Ameren Services	Kirit Shah	Affirmative	View
1	American Electric Power	Paul B. Johnson		
1	American Transmission Company, LLC	Andrew Z Pusztai	Negative	View
1	Arizona Public Service Co.	Robert Smith	Negative	
1	Associated Electric Cooperative, Inc.	John Bussman	Negative	View
1	Austin Energy	James Armke	Affirmative	
1	Balancing Authority of Northern California NCR11118	Kevin Smith	Affirmative	
1	Baltimore Gas & Electric Company	Gregory S Miller	Negative	View

1	BC Hydro and Power Authority	Patricia Robertson	Affirmative	View
1	Beaches Energy Services	Joseph S Stonecipher	Negative	View
1	Black Hills Corp	Eric Egge	Affirmative	
1	Bonneville Power Administration	Donald S. Watkins	Negative	View
1	Brazos Electric Power Cooperative, Inc.	Tony Kroskey		
1	CenterPoint Energy Houston Electric	Dale Bodden	Negative	
1	Central Maine Power Company	Kevin L Howes	Affirmative	
1	City of Tacoma, Department of Public Utilities, Light Division, dba Tacoma Power	Chang G Choi	Affirmative	View
1	City Utilities of Springfield, Missouri	Jeff Knottek	Affirmative	View
1	Cleco Power LLC	Danny McDaniel		
1	Colorado Springs Utilities	Paul Morland	Affirmative	
1	Consolidated Edison Co. of New York	Christopher L de Graffenried	Affirmative	
1	Consumers Power Inc.	Stuart Sloan	Negative	View
1	CPS Energy	Richard Castrejana	Affirmative	
1	Dairyland Power Coop.	Robert W. Roddy		
1	Dayton Power & Light Co.	Hertzel Shamash	Affirmative	
1	Dominion Virginia Power	Michael S Crowley	Affirmative	
1	Entergy Services, Inc.	Edward J Davis	Negative	View
1	FirstEnergy Corp.	William J Smith	Negative	View
1	Florida Keys Electric Cooperative Assoc.	Dennis Minton	Negative	View
1	Gainesville Regional Utilities	Luther E. Fair		
1	Georgia Transmission Corporation	Harold Taylor	Affirmative	
1	Great River Energy	Gordon Pietsch	Affirmative	
1	Hoosier Energy Rural Electric Cooperative, Inc.	Robert Solomon	Affirmative	
1	Hydro One Networks, Inc.	Ajay Garg	Affirmative	
1	Hydro-Quebec TransEnergie	Bernard Pelletier		
1	Idaho Power Company	Ronald D. Schellberg	Affirmative	
1	Imperial Irrigation District	Tino Zaragoza	Affirmative	View
1	International Transmission Company Holdings Corp	Michael Moltane	Affirmative	View
1	Kansas City Power & Light Co.	Michael Gammon	Affirmative	
1	Lee County Electric Cooperative	John W Delucca	Abstain	
1	Lincoln Electric System	Doug Bantam	Negative	
1	Long Island Power Authority	Robert Ganley	Affirmative	
1	Los Angeles Department of Water & Power	Ly M Le		
1	Lower Colorado River Authority	Martyn Turner	Affirmative	
1	Manitoba Hydro	Joe D Petaski	Negative	View
1	MEAG Power	Danny Dees		
1	MidAmerican Energy Co.	Terry Harbour	Affirmative	View
1	Minnkota Power Coop. Inc.	Richard Burt	Negative	View
1	Muscatine Power & Water	Tim Reed	Negative	View
1	N.W. Electric Power Cooperative, Inc.	Mark Ramsey	Negative	
1	Nebraska Public Power District	Cole C Brodine	Negative	View
1	New Brunswick Power Transmission Corporation	Randy MacDonald		
1	Northeast Missouri Electric Power Cooperative	Kevin White	Affirmative	
1	Northeast Utilities	David Boguslawski	Affirmative	View
1	Northern Indiana Public Service Co.	Kevin M Largura	Negative	
1	NorthWestern Energy	John Canavan	Negative	View
1	Ohio Valley Electric Corp.	Robert Mattey	Negative	
1	Omaha Public Power District	Doug Peterchuck	Affirmative	
1	Oncor Electric Delivery	Brenda Pulis	Affirmative	View
1	Orlando Utilities Commission	Brad Chase	Affirmative	
1	Otter Tail Power Company	Daryl Hanson		
1	PacifiCorp	Colt Norrish		
1	PECO Energy	Ronald Schloendorn	Affirmative	
1	Platte River Power Authority	John C. Collins	Affirmative	
1	Portland General Electric Co.	John T Walker	Affirmative	
1	Potomac Electric Power Co.	David Thorne	Negative	View
1	PPL Electric Utilities Corp.	Brenda L Truhe	Abstain	
1	Progress Energy Carolinas	Brett A Koelsch	Affirmative	
1	Public Service Company of New Mexico	Laurie Williams	Affirmative	
1	Public Service Electric and Gas Co.	Kenneth D. Brown	Affirmative	
1	Public Utility District No. 1 of Okanogan County	Dale Dunckel	Affirmative	
1	Puget Sound Energy, Inc.	Denise M Lietz		

1	Rochester Gas and Electric Corp.	John C. Allen	Affirmative	
1	Sacramento Municipal Utility District	Tim Kelley	Affirmative	
1	Salt River Project	Robert Kondziolka	Affirmative	
1	Santee Cooper	Terry L Blackwell	Affirmative	
1	Seattle City Light	Pawel Krupa	Negative	View
1	Sho-Me Power Electric Cooperative	Denise Stevens	Negative	
1	Sierra Pacific Power Co.	Rich Salgo	Affirmative	
1	Snohomish County PUD No. 1	Long T Duong	Affirmative	
1	South California Edison Company	Steven Mavis	Affirmative	
1	Southern Company Services, Inc.	Robert Schaffeld	Affirmative	View
1	Southwest Transmission Cooperative, Inc.	James Jones	Affirmative	
1	Sunflower Electric Power Corporation	Noman Lee Williams	Affirmative	
1	Tennessee Valley Authority	Larry Akens	Negative	View
1	Tri-State G & T Association, Inc.	Tracy Sliman	Affirmative	
1	United Illuminating Co.	Jonathan Appelbaum	Affirmative	
1	Westar Energy	Allen Klassen	Negative	View
1	Western Area Power Administration	Brandy A Dunn	Affirmative	
1	Western Farmers Electric Coop.	Forrest Brock	Affirmative	
1	Xcel Energy, Inc.	Gregory L Pieper	Negative	View
2	Alberta Electric System Operator	Mark B Thompson	Affirmative	
2	BC Hydro	Venkataramakrishnan Vinnakota	Affirmative	
2	Independent Electricity System Operator	Barbara Constantinescu	Negative	View
2	Midwest ISO, Inc.	Marie Knox	Abstain	
2	New Brunswick System Operator	Alden Briggs	Affirmative	
2	PJM Interconnection, L.L.C.	Tom Bowe	Negative	View
3	AEP	Michael E Deloach	Negative	View
3	Alabama Power Company	Richard J. Mandes	Affirmative	
3	Ameren Services	Mark Peters	Affirmative	
3	APS	Steven Norris	Negative	
3	Arkansas Electric Cooperative Corporation	Philip Huff	Affirmative	
3	Atlantic City Electric Company	NICOLE BUCKMAN	Negative	View
3	BC Hydro and Power Authority	Pat G. Harrington	Affirmative	
3	Blachly-Lane Electric Co-op	Bud Tracy	Negative	View
3	Bonneville Power Administration	Rebecca Berdahl		
3	Central Electric Cooperative, Inc. (Redmond, Oregon)	Dave Markham	Negative	View
3	Central Electric Power Cooperative	Ralph J Schulte	Negative	
3	Central Lincoln PUD	Steve Alexanderson	Affirmative	View
3	City of Austin dba Austin Energy	Andrew Gallo	Affirmative	View
3	City of Clewiston	Lynne Mila	Negative	
3	City of Farmington	Linda Jacobson	Affirmative	
3	City of Garland	Ronnie C Hoeinghaus	Abstain	
3	City of Green Cove Springs	Gregg R Griffin		
3	City of Redding	Bill Hughes	Affirmative	
3	Clearwater Power Co.	Dave Hagen	Negative	View
3	Cleco Corporation	Michelle A Corley		
3	Colorado Springs Utilities	Lisa Cleary	Affirmative	
3	ComEd	Bruce Krawczyk	Affirmative	
3	Consolidated Edison Co. of New York	Peter T Yost	Affirmative	
3	Constellation Energy	Carolyn Ingersoll	Negative	
3	Consumers Energy	Richard Blumenstock	Negative	View
3	Consumers Power Inc.	Roman Gillen	Negative	View
3	Coos-Curry Electric Cooperative, Inc	Roger Meader	Negative	View
3	Cowlitz County PUD	Russell A Noble	Affirmative	
3	CPS Energy	Jose Escamilla	Affirmative	View
3	Delmarva Power & Light Co.	Michael R. Mayer	Negative	
3	Dominion Resources Services	Michael F. Gildea	Affirmative	
3	Douglas Electric Cooperative	Dave Sabala	Negative	View
3	Duke Energy Carolina	Henry Ernst-Jr	Negative	
3	Fall River Rural Electric Cooperative	Bryan Case	Negative	View
3	FirstEnergy Energy Delivery	Stephan Kern	Negative	View
3	Flathead Electric Cooperative	John M Goroski	Negative	
3	Florida Municipal Power Agency	Joe McKinney	Negative	View
3	Florida Power Corporation	Lee Schuster	Affirmative	
3	Gainesville Regional Utilities	Kenneth Simmons		
3	Georgia Power Company	Anthony L Wilson	Affirmative	

3	Georgia Systems Operations Corporation	William N. Phinney	Affirmative	
3	Great River Energy	Sam Kokkinen	Affirmative	
3	Gulf Power Company	Paul C Caldwell	Affirmative	
3	Hydro One Networks, Inc.	David Kiguel	Affirmative	
3	Imperial Irrigation District	Jesus S. Alcaraz	Affirmative	View
3	JEA	Garry Baker		
3	Kansas City Power & Light Co.	Charles Locke	Affirmative	
3	Kissimmee Utility Authority	Gregory D Woessner	Negative	
3	Lakeland Electric	Mace Hunter	Negative	
3	Lane Electric Cooperative, Inc.	Rick Crinklaw	Negative	View
3	Lincoln Electric Cooperative, Inc.	Michael Henry	Negative	View
3	Lincoln Electric System	Jason Fortik	Negative	View
3	Lost River Electric Cooperative	Richard Reynolds	Negative	View
3	Louisville Gas and Electric Co.	Charles A. Freibert	Abstain	
3	M & A Electric Power Cooperative	Stephen D Pogue	Negative	
3	Manitoba Hydro	Greg C. Parent	Negative	View
3	Manitowoc Public Utilities	Thomas E Reed	Affirmative	
3	MidAmerican Energy Co.	Thomas C. Mielnik		
3	Mississippi Power	Jeff Franklin	Affirmative	
3	Modesto Irrigation District	Jack W Savage		
3	Municipal Electric Authority of Georgia	Steven M. Jackson		
3	Muscatine Power & Water	John S Bos	Negative	View
3	Nebraska Public Power District	Tony Eddleman	Negative	View
3	New York Power Authority	Marilyn Brown	Affirmative	
3	Niagara Mohawk (National Grid Company)	Michael Schiavone		
3	Northeast Missouri Electric Power Cooperative	Skyler Wiegmann	Affirmative	
3	Northern Indiana Public Service Co.	William SeDoris	Negative	
3	Northern Lights Inc.	Jon Shelby	Negative	View
3	Okanogan County Electric Cooperative, Inc.	Ray Ellis	Negative	View
3	Orange and Rockland Utilities, Inc.	David Burke		
3	Orlando Utilities Commission	Ballard K Mutters	Affirmative	
3	Owensboro Municipal Utilities	Thomas T Lyons	Negative	
3	Pacific Gas and Electric Company	John H Hagen	Affirmative	View
3	Platte River Power Authority	Terry L Baker	Affirmative	
3	Potomac Electric Power Co.	Robert Reuter	Negative	
3	Progress Energy Carolinas	Sam Waters	Affirmative	
3	Public Service Electric and Gas Co.	Jeffrey Mueller	Affirmative	
3	Public Utility District No. 1 of Clallam County	David Proebstel	Affirmative	
3	Public Utility District No. 2 of Grant County	Greg Lange	Affirmative	View
3	Puget Sound Energy, Inc.	Erin Apperson	Abstain	
3	Raft River Rural Electric Cooperative	Heber Carpenter	Negative	View
3	Rayburn Country Electric Coop., Inc.	Eddy Reece		
3	Rutherford EMC	Thomas M Haire	Affirmative	
3	Sacramento Municipal Utility District	James Leigh-Kendall	Affirmative	
3	Salmon River Electric Cooperative	Ken Dizes	Negative	View
3	Salt River Project	John T. Underhill	Affirmative	
3	Santee Cooper	James M Poston	Affirmative	
3	Seattle City Light	Dana Wheelock	Negative	View
3	Seminole Electric Cooperative, Inc.	James R Frauen	Negative	View
3	South Carolina Electric & Gas Co.	Hubert C Young		
3	South Mississippi Electric Power Association	Gary Hutson	Affirmative	
3	Tacoma Public Utilities	Travis Metcalfe	Affirmative	View
3	Tampa Electric Co.	Ronald L Donahey		
3	Tennessee Valley Authority	Ian S Grant	Negative	View
3	Umatilla Electric Cooperative	Steve Eldrige	Negative	View
3	West Oregon Electric Cooperative, Inc.	Marc Farmer	Negative	View
3	Wisconsin Electric Power Marketing	James R Keller	Affirmative	View
3	Xcel Energy, Inc.	Michael Ibold	Affirmative	
4	Alliant Energy Corp. Services, Inc.	Kenneth Goldsmith	Affirmative	
4	American Public Power Association	Allen Mosher	Affirmative	
4	Central Lincoln PUD	Shamus J Gamache	Affirmative	View
4	City of Austin dba Austin Energy	Reza Ebrahimian	Affirmative	View
4	City of Clewiston	Kevin McCarthy	Negative	
4	City of New Smyrna Beach Utilities Commission	Tim Beyrle	Negative	
4	City of Redding	Nicholas Zettel	Affirmative	
4	City Utilities of Springfield, Missouri	John Allen	Affirmative	View

4	Consumers Energy	David Frank Ronk		
4	Cowlitz County PUD	Rick Syring	Affirmative	
4	Flathead Electric Cooperative	Russ Schneider	Negative	View
4	Florida Municipal Power Agency	Frank Gaffney	Negative	View
4	Fort Pierce Utilities Authority	Thomas Richards	Negative	View
4	Georgia System Operations Corporation	Guy Andrews	Affirmative	
4	Illinois Municipal Electric Agency	Bob C. Thomas	Negative	View
4	Imperial Irrigation District	Diana U Torres	Affirmative	View
4	Indiana Municipal Power Agency	Jack Alvey	Affirmative	
4	Madison Gas and Electric Co.	Joseph DePoorter	Affirmative	View
4	Modesto Irrigation District	Spencer Tacke	Affirmative	
4	Northern California Power Agency	Tracy R Bibb		
4	Ohio Edison Company	Douglas Hohlbaugh	Negative	View
4	Pacific Northwest Generating Cooperative	Aleka K Scott	Negative	View
4	Public Utility District No. 1 of Douglas County	Henry E. LuBean		
4	Public Utility District No. 1 of Snohomish County	John D Martinsen	Affirmative	
4	Sacramento Municipal Utility District	Mike Ramirez	Affirmative	
4	Seattle City Light	Hao Li	Negative	View
4	Seminole Electric Cooperative, Inc.	Steven R Wallace	Negative	
4	South Mississippi Electric Power Association	Steven McElhaney	Affirmative	
4	Tacoma Public Utilities	Keith Morisette	Affirmative	View
4	Wisconsin Energy Corp.	Anthony Jankowski	Affirmative	
5	AEP Service Corp.	Brock Ondayko		
5	AES Corporation	Leo Bernier	Affirmative	
5	Amerenue	Sam Dwyer	Affirmative	
5	Arizona Public Service Co.	Edward Cambridge	Negative	
5	BC Hydro and Power Authority	Clement Ma	Affirmative	
5	Boise-Kuna Irrigation District/dba Lucky peak power plant project	Mike D Kukla	Negative	
5	Bonneville Power Administration	Francis J. Halpin	Negative	View
5	City and County of San Francisco	Daniel Mason	Abstain	
5	City of Austin dba Austin Energy	Jeanie Doty	Affirmative	View
5	City of Grand Island	Jeff Mead		
5	City of Redding	Paul Cummings	Affirmative	
5	City of Tacoma, Department of Public Utilities, Light Division, dba Tacoma Power	Max Emrick	Affirmative	View
5	Cleco Power	Stephanie Huffman		
5	Cogentrix Energy, Inc.	Mike D Hirst	Affirmative	
5	Colorado Springs Utilities	Jennifer Eckels	Affirmative	
5	Consolidated Edison Co. of New York	Wilket (Jack) Ng	Affirmative	
5	Constellation Power Source Generation, Inc.	Amir Y Hammad	Negative	View
5	Cowlitz County PUD	Bob Essex	Affirmative	
5	CPS Energy	Robert Stevens	Affirmative	
5	Detroit Edison Company	Christy Wicke		
5	Dominion Resources, Inc.	Mike Garton	Affirmative	
5	Duke Energy	Dale Q Goodwine	Negative	View
5	Dynegy Inc.	Dan Roethemeyer	Affirmative	
5	East Kentucky Power Coop.	Stephen Ricker		
5	Exelon Nuclear	Michael Korchynsky	Affirmative	
5	ExxonMobil Research and Engineering	Martin Kaufman	Negative	
5	FirstEnergy Solutions	Kenneth Dresner		
5	Florida Municipal Power Agency	David Schumann	Negative	View
5	Great River Energy	Preston L Walsh	Affirmative	
5	Green Country Energy	Greg Froehling	Affirmative	
5	Imperial Irrigation District	Marcela Y Caballero	Affirmative	
5	Invenergy LLC	Alan Beckham		
5	JEA	John J Babik		
5	Kissimmee Utility Authority	Mike Blough	Negative	
5	Lakeland Electric	James M Howard	Negative	View
5	Liberty Electric Power LLC	Daniel Duff	Negative	View
5	Lincoln Electric System	Dennis Florom	Negative	View
5	Los Angeles Department of Water & Power	Kenneth Silver	Affirmative	
5	Lower Colorado River Authority	Tom Foreman	Affirmative	
5	Luminant Generation Company LLC	Mike Laney	Affirmative	
5	Manitoba Hydro	S N Fernando	Negative	View
5	Massachusetts Municipal Wholesale Electric Company	David Gordon	Abstain	

5	MEAG Power	Steven Grego		
5	MidAmerican Energy Co.	Christopher Schneider	Affirmative	View
5	Muscatine Power & Water	Mike Avesing	Negative	View
5	Nebraska Public Power District	Don Schmit	Negative	View
5	New Harquahala Generating Co. LLC	Nathaniel Larson	Affirmative	
5	New York Power Authority	Gerald Mannarino	Affirmative	
5	North Carolina Electric Membership Corp.	Jeffrey S Brame	Affirmative	
5	Northern Indiana Public Service Co.	William O. Thompson	Negative	
5	Occidental Chemical	Michelle R DAntuono	Affirmative	View
5	Oklahoma Gas and Electric Co.	Kim Morphis		
5	Omaha Public Power District	Mahmood Z. Safi	Affirmative	
5	Orlando Utilities Commission	Richard Kinas		
5	Pacific Gas and Electric Company	Richard J. Padilla		
5	PacifiCorp	Sandra L. Shaffer	Affirmative	
5	Platte River Power Authority	Roland Thiel	Affirmative	
5	Portland General Electric Co.	Gary L Tingley	Affirmative	
5	PPL Generation LLC	Annette M Bannon		
5	Progress Energy Carolinas	Wayne Lewis	Affirmative	
5	Proven Compliance Solutions	Mitchell E Needham	Affirmative	
5	PSEG Fossil LLC	Mikhail Falkovich	Affirmative	
5	Puget Sound Energy, Inc.	Tom Flynn		
5	Sacramento Municipal Utility District	Bethany Hunter	Affirmative	
5	Salt River Project	Glen Reeves	Affirmative	
5	Santee Cooper	Lewis P Pierce	Affirmative	
5	Seattle City Light	Michael J. Haynes	Negative	View
5	Seminole Electric Cooperative, Inc.	Brenda K. Atkins	Negative	
5	Snohomish County PUD No. 1	Sam Nietfeld	Affirmative	
5	South Mississippi Electric Power Association	Jerry W Johnson		
5	Southern Company Generation	William D Shultz	Affirmative	View
5	Tampa Electric Co.	RJames Rocha		
5	Tenaska, Inc.	Scott M Helyer	Negative	
5	Tennessee Valley Authority	David Thompson	Negative	View
5	Tri-State G & T Association, Inc.	Barry Ingold	Affirmative	
5	U.S. Army Corps of Engineers	Melissa Kurtz	Affirmative	
5	U.S. Bureau of Reclamation	Martin Bauer		
5	Westar Energy	Bo Jones	Negative	View
5	Western Farmers Electric Coop.	Caleb J Muckala		
5	Wisconsin Electric Power Co.	Linda Horn	Affirmative	View
6	AEP Marketing	Edward P. Cox	Negative	View
6	APS	RANDY A YOUNG	Negative	
6	Associated Electric Cooperative, Inc.	Brian Ackermann	Negative	
6	Bonneville Power Administration	Brenda S. Anderson	Negative	
6	City of Austin dba Austin Energy	Lisa L Martin	Affirmative	View
6	City of Redding	Marvin Briggs	Affirmative	
6	Cleco Power LLC	Robert Hirchak		
6	Colorado Springs Utilities	Lisa C Rosintoski	Affirmative	
6	Consolidated Edison Co. of New York	Nickesha P Carrol	Affirmative	
6	Constellation Energy Commodities Group	Brenda Powell	Negative	
6	Dominion Resources, Inc.	Louis S. Slade	Affirmative	
6	Duke Energy Carolina	Walter Yeager	Negative	
6	Exelon Power Team	Pulin Shah	Affirmative	
6	FirstEnergy Solutions	Kevin Querry	Negative	View
6	Florida Municipal Power Agency	Richard L. Montgomery	Negative	View
6	Florida Municipal Power Pool	Thomas Washburn	Negative	View
6	Florida Power & Light Co.	Silvia P. Mitchell		
6	Great River Energy	Donna Stephenson		
6	Imperial Irrigation District	Cathy Bretz	Affirmative	View
6	Kansas City Power & Light Co.	Jessica L Klinghoffer	Affirmative	
6	Lakeland Electric	Paul Shipps	Negative	View
6	Lincoln Electric System	Eric Ruskamp	Negative	View
6	Manitoba Hydro	Daniel Prowse	Negative	View
6	MidAmerican Energy Co.	Dennis Kimm	Affirmative	
6	Muscatine Power & Water	John Stolley	Negative	View
6	New York Power Authority	William Palazzo	Affirmative	
6	Northern Indiana Public Service Co.	Joseph O'Brien	Negative	
6	NRG Energy, Inc.	Alan Johnson		
6	Omaha Public Power District	David Ried	Affirmative	

6	PacifiCorp	Scott L Smith	Affirmative	
6	Platte River Power Authority	Carol Ballantine	Affirmative	
6	PPL EnergyPlus LLC	Mark A Heimbach	Negative	
6	Progress Energy	John T Sturgeon	Affirmative	
6	PSEG Energy Resources & Trade LLC	Peter Dolan	Affirmative	
6	Public Utility District No. 1 of Chelan County	Hugh A. Owen	Affirmative	
6	Sacramento Municipal Utility District	Claire Warshaw	Affirmative	
6	Salt River Project	Steven J Hulet	Affirmative	
6	Santee Cooper	Michael Brown	Affirmative	
6	Seattle City Light	Dennis Sismaet	Negative	View
6	Seminole Electric Cooperative, Inc.	Trudy S. Novak	Negative	
6	Snohomish County PUD No. 1	William T Moojen	Affirmative	
6	South California Edison Company	Lujuanna Medina	Affirmative	
6	Southern Company Generation and Energy Marketing	John J. Ciza	Affirmative	
6	Tacoma Public Utilities	Michael C Hill	Affirmative	View
6	Tampa Electric Co.	Benjamin F Smith II		
6	Tennessee Valley Authority	Marjorie S. Parsons	Negative	View
6	Xcel Energy, Inc.	David F. Lemmons		
8		James A Maenner	Negative	View
8		Roger C Zaklukiewicz	Affirmative	View
8		Merle Ashton	Affirmative	
8		Kristina M. Loudermilk		
8		Edward C Stein	Affirmative	
8	INTELLIBIND	Kevin Conway		
8	JDRJC Associates	Jim Cyrulewski	Negative	
8	Pacific Northwest Generating Cooperative	Margaret Ryan	Negative	View
8	Transmission Strategies, LLC	Bernie M Pasternack	Abstain	
8	Utility Services, Inc.	Brian Evans-Mongeon	Negative	View
8	Volkmann Consulting, Inc.	Terry Volkmann		
9	Commonwealth of Massachusetts Department of Public Utilities	Donald Nelson	Affirmative	
9	National Association of Regulatory Utility Commissioners	Diane J Barney		
10	New York State Reliability Council	Alan Adamson	Affirmative	
10	Northeast Power Coordinating Council, Inc.	Guy V. Zito	Affirmative	View
10	ReliabilityFirst Corporation	Anthony E Jablonski	Affirmative	
10	SERC Reliability Corporation	Carter B. Edge	Affirmative	
10	Texas Reliability Entity, Inc.	Donald G Jones	Negative	View
10	Western Electricity Coordinating Council	Steven L. Rueckert	Affirmative	

Legal and Privacy : 609.452.8060 voice : 609.452.9550 fax : 116-390 Village Boulevard : Princeton, NJ 08540-5721
Washington Office: 1120 G Street, N.W. : Suite 990 : Washington, DC 20005-3801

Account Log-In/Register

Copyright © 2010 by the North American Electric Reliability Corporation. : All rights reserved.
A New Jersey Nonprofit Corporation

Ballot Results	
Non-Binding Poll Name:	2007-17 Non-binding Poll
Poll Period:	9/19/2011 - 9/29/2011
Total # Opinions:	198
Total Ballot Pool:	332
Summary Results:	83.13% of those who registered to participate provided an opinion; 68.68% of those who provided an opinion indicated support for the VRFs and VSLs that were proposed.

Individual Ballot Pool Results

Segment	Organization	Member	Opinion	Comments
1	Ameren Services	Kirit Shah	Negative	View
1	American Electric Power	Paul B. Johnson		
1	American Transmission Company, LLC	Andrew Z Pusztai	Abstain	
1	Arizona Public Service Co.	Robert Smith	Affirmative	
1	Associated Electric Cooperative, Inc.	John Bussman	Negative	
1	Austin Energy	James Armke	Abstain	
1	Balancing Authority of Northern California NCR11118	Kevin Smith	Abstain	
1	Baltimore Gas & Electric Company	Gregory S Miller	Abstain	
1	BC Hydro and Power Authority	Patricia Robertson	Abstain	
1	Beaches Energy Services	Joseph S Stonecipher	Negative	
1	Bonneville Power Administration	Donald S. Watkins	Negative	
1	Brazos Electric Power Cooperative, Inc.	Tony Kroskey		
1	CenterPoint Energy Houston Electric	Dale Bodden	Negative	
1	Central Maine Power Company	Kevin L Howes	Affirmative	
1	City of Tacoma, Department of Public Utilities, Light Division, dba Tacoma Power	Chang G Choi	Affirmative	
1	Cleco Power LLC	Danny McDaniel		
1	Colorado Springs Utilities	Paul Morland	Affirmative	
1	Consolidated Edison Co. of New York	Christopher L de Graffenried	Abstain	
1	CPS Energy	Richard Castrejana	Affirmative	
1	Dairyland Power Coop.	Robert W. Roddy		
1	Dayton Power & Light Co.	Hertzel Shamash		
1	Dominion Virginia Power	Michael S Crowley	Abstain	
1	Entergy Services, Inc.	Edward J Davis	Negative	View
1	FirstEnergy Corp.	William J Smith	Negative	View
1	Florida Keys Electric Cooperative Assoc.	Dennis Minton	Negative	
1	Gainesville Regional Utilities	Luther E. Fair	Abstain	
1	Georgia Transmission Corporation	Harold Taylor	Affirmative	
1	Great River Energy	Gordon Pietsch	Affirmative	
1	Hoosier Energy Rural Electric Cooperative, Inc.	Robert Solomon	Affirmative	
1	Hydro One Networks, Inc.	Ajay Garg	Affirmative	
1	Hydro-Quebec TransEnergie	Bernard Pelletier		

1	Idaho Power Company	Ronald D. Schellberg	Affirmative	
1	Imperial Irrigation District	Tino Zaragoza	Affirmative	
1	International Transmission Company Holdings Corp	Michael Moltane	Abstain	
1	Kansas City Power & Light Co.	Michael Gammon	Affirmative	
1	Lee County Electric Cooperative	John W Delucca	Abstain	
1	Lincoln Electric System	Doug Bantam	Affirmative	
1	Long Island Power Authority	Robert Ganley	Affirmative	
1	Los Angeles Department of Water & Power	Ly M Le		
1	Lower Colorado River Authority	Martyn Turner	Affirmative	
1	Manitoba Hydro	Joe D Petaski	Affirmative	
1	MEAG Power	Danny Dees		
1	MidAmerican Energy Co.	Terry Harbour	Affirmative	
1	Minnkota Power Coop. Inc.	Richard Burt	Negative	View
1	N.W. Electric Power Cooperative, Inc.	Mark Ramsey	Negative	
1	Nebraska Public Power District	Cole C Brodine	Abstain	
1	New Brunswick Power Transmission Corporation	Randy MacDonald		
1	Northeast Utilities	David Boguslawski	Affirmative	
1	Northern Indiana Public Service Co.	Kevin M Largura	Negative	
1	NorthWestern Energy	John Canavan	Negative	
1	Ohio Valley Electric Corp.	Robert Mattey	Negative	
1	Omaha Public Power District	Doug Peterchuck	Affirmative	
1	Oncor Electric Delivery	Brenda Pulis		
1	Orlando Utilities Commission	Brad Chase	Abstain	
1	Otter Tail Power Company	Daryl Hanson		
1	PacifiCorp	Colt Norrish		
1	PECO Energy	Ronald Schloendorn	Affirmative	
1	Platte River Power Authority	John C. Collins	Affirmative	
1	Portland General Electric Co.	John T Walker	Affirmative	
1	Potomac Electric Power Co.	David Thorne	Abstain	
1	PPL Electric Utilities Corp.	Brenda L Truhe	Abstain	
1	Public Service Company of New Mexico	Laurie Williams	Affirmative	
1	Public Service Electric and Gas Co.	Kenneth D. Brown	Abstain	
1	Public Utility District No. 1 of Okanogan County	Dale Dunckel	Abstain	
1	Puget Sound Energy, Inc.	Denise M Lietz		
1	Rochester Gas and Electric Corp.	John C. Allen	Affirmative	
1	Sacramento Municipal Utility District	Tim Kelley	Abstain	
1	Salt River Project	Robert Kondziolka	Affirmative	
1	Santee Cooper	Terry L Blackwell	Affirmative	
1	Seattle City Light	Pawel Krupa	Negative	
1	Sho-Me Power Electric Cooperative	Denise Stevens	Negative	
1	Sierra Pacific Power Co.	Rich Salgo	Abstain	
1	Snohomish County PUD No. 1	Long T Duong	Abstain	
1	South California Edison Company	Steven Mavis	Affirmative	
1	Southern Company Services, Inc.	Robert Schaffeld	Affirmative	

1	Southwest Transmission Cooperative, Inc.	James Jones	Affirmative	
1	Sunflower Electric Power Corporation	Noman Lee Williams	Affirmative	
1	Tennessee Valley Authority	Larry Akens	Abstain	
1	Tri-State G & T Association, Inc.	Tracy Sliman	Affirmative	
1	United Illuminating Co.	Jonathan Appelbaum	Affirmative	
1	Westar Energy	Allen Klassen	Abstain	
1	Western Area Power Administration	Brandy A Dunn	Affirmative	
1	Western Farmers Electric Coop.	Forrest Brock	Affirmative	
2	Alberta Electric System Operator	Mark B Thompson	Abstain	
2	BC Hydro	Venkataramakrishnan Vinnakota	Abstain	
2	Independent Electricity System Operator	Barbara Constantinescu	Negative	View
2	Midwest ISO, Inc.	Marie Knox	Abstain	
2	New Brunswick System Operator	Alden Briggs	Abstain	
2	PJM Interconnection, L.L.C.	Tom Bowe	Negative	View
3	AEP	Michael E Deloach	Negative	View
3	Alabama Power Company	Richard J. Mandes	Affirmative	
3	Ameren Services	Mark Peters	Negative	
3	APS	Steven Norris	Affirmative	
3	Arkansas Electric Cooperative Corporation	Philip Huff	Affirmative	
3	Atlantic City Electric Company	NICOLE BUCKMAN	Abstain	View
3	BC Hydro and Power Authority	Pat G. Harrington	Abstain	
3	Bonneville Power Administration	Rebecca Berdahl		
3	Central Electric Power Cooperative	Ralph J Schulte	Negative	
3	Central Lincoln PUD	Steve Alexanderson	Abstain	
3	City of Austin dba Austin Energy	Andrew Gallo	Affirmative	
3	City of Clewiston	Lynne Mila	Negative	
3	City of Farmington	Linda Jacobson	Affirmative	
3	City of Garland	Ronnie C Hoeinghaus	Abstain	
3	City of Green Cove Springs	Gregg R Griffin		
3	City of Redding	Bill Hughes	Affirmative	
3	Cleco Corporation	Michelle A Corley		
3	Colorado Springs Utilities	Lisa Cleary	Affirmative	
3	ComEd	Bruce Krawczyk	Affirmative	
3	Consolidated Edison Co. of New York	Peter T Yost	Abstain	
3	Constellation Energy	Carolyn Ingersoll	Negative	
3	Consumers Energy	Richard Blumenstock	Abstain	
3	Cowlitz County PUD	Russell A Noble	Affirmative	
3	CPS Energy	Jose Escamilla	Affirmative	
3	Duke Energy Carolina	Henry Ernst-Jr	Affirmative	
3	FirstEnergy Energy Delivery	Stephan Kern	Negative	View
3	Flathead Electric Cooperative	John M Goroski	Negative	
3	Florida Municipal Power Agency	Joe McKinney	Negative	View
3	Florida Power Corporation	Lee Schuster	Affirmative	
3	Gainesville Regional Utilities	Kenneth Simmons		
3	Georgia Power Company	Anthony L Wilson	Affirmative	

3	Georgia Systems Operations Corporation	William N. Phinney	Affirmative	
3	Great River Energy	Sam Kokkinen	Affirmative	
3	Gulf Power Company	Paul C Caldwell	Affirmative	
3	Hydro One Networks, Inc.	David Kiguel	Affirmative	
3	Imperial Irrigation District	Jesus S. Alcaraz	Affirmative	View
3	JEA	Garry Baker		
3	Kansas City Power & Light Co.	Charles Locke	Affirmative	
3	Kissimmee Utility Authority	Gregory D Woessner	Negative	
3	Lakeland Electric	Mace Hunter	Negative	
3	Louisville Gas and Electric Co.	Charles A. Freibert		
3	Manitoba Hydro	Greg C. Parent	Affirmative	
3	Manitowoc Public Utilities	Thomas E Reed	Affirmative	
3	MidAmerican Energy Co.	Thomas C. Mielnik		
3	Mississippi Power	Jeff Franklin	Affirmative	
3	Modesto Irrigation District	Jack W Savage		
3	Municipal Electric Authority of Georgia	Steven M. Jackson		
3	Muscatine Power & Water	John S Bos	Affirmative	
3	Nebraska Public Power District	Tony Eddleman	Abstain	
3	New York Power Authority	Marilyn Brown	Affirmative	
3	Niagara Mohawk (National Grid Company)	Michael Schiavone		
3	Northeast Missouri Electric Power Cooperative	Skyler Wiegmann	Abstain	
3	Northern Indiana Public Service Co.	William SeDoris	Negative	
3	Orange and Rockland Utilities, Inc.	David Burke		
3	Orlando Utilities Commission	Ballard K Mutters	Abstain	
3	Owensboro Municipal Utilities	Thomas T Lyons	Negative	
3	Pacific Gas and Electric Company	John H Hagen	Affirmative	
3	Platte River Power Authority	Terry L Baker	Affirmative	
3	Potomac Electric Power Co.	Robert Reuter	Abstain	
3	Progress Energy Carolinas	Sam Waters	Affirmative	
3	Public Service Electric and Gas Co.	Jeffrey Mueller	Abstain	
3	Public Utility District No. 1 of Clallam County	David Proebstel	Affirmative	
3	Public Utility District No. 2 of Grant County	Greg Lange	Affirmative	
3	Puget Sound Energy, Inc.	Erin Apperson	Abstain	
3	Rayburn Country Electric Coop., Inc.	Eddy Reece		
3	Sacramento Municipal Utility District	James Leigh-Kendall	Abstain	
3	Salt River Project	John T. Underhill	Affirmative	
3	Santee Cooper	James M Poston	Affirmative	
3	Seattle City Light	Dana Wheelock	Negative	
3	Seminole Electric Cooperative, Inc.	James R Frauen	Negative	View
3	South Carolina Electric & Gas Co.	Hubert C Young		
3	Tacoma Public Utilities	Travis Metcalfe	Affirmative	
3	Tampa Electric Co.	Ronald L Donahey		
3	Tennessee Valley Authority	Ian S Grant	Abstain	
3	Wisconsin Electric Power Marketing	James R Keller	Abstain	

3	Xcel Energy, Inc.	Michael Ibold	Negative	View
4	Alliant Energy Corp. Services, Inc.	Kenneth Goldsmith	Affirmative	
4	American Public Power Association	Allen Mosher	Abstain	
4	Central Lincoln PUD	Shamus J Gamache	Abstain	
4	City of Austin dba Austin Energy	Reza Ebrahimian	Affirmative	View
4	City of Clewiston	Kevin McCarthy	Negative	
4	City of New Smyrna Beach Utilities Commission	Tim Beyrle	Negative	
4	City of Redding	Nicholas Zettel	Affirmative	
4	City Utilities of Springfield, Missouri	John Allen	Affirmative	View
4	Consumers Energy	David Frank Ronk		
4	Cowlitz County PUD	Rick Syring	Affirmative	
4	Flathead Electric Cooperative	Russ Schneider	Negative	View
4	Florida Municipal Power Agency	Frank Gaffney	Negative	View
4	Fort Pierce Utilities Authority	Thomas Richards	Abstain	
4	Georgia System Operations Corporation	Guy Andrews	Affirmative	
4	Illinois Municipal Electric Agency	Bob C. Thomas	Abstain	
4	Imperial Irrigation District	Diana U Torres	Affirmative	
4	Indiana Municipal Power Agency	Jack Alvey	Abstain	
4	Madison Gas and Electric Co.	Joseph DePoorter	Abstain	
4	Modesto Irrigation District	Spencer Tacke		
4	Northern California Power Agency	Tracy R Bibb		
4	Ohio Edison Company	Douglas Hohlbaugh	Negative	View
4	Public Utility District No. 1 of Douglas County	Henry E. LuBean		
4	Public Utility District No. 1 of Snohomish County	John D Martinsen	Abstain	
4	Sacramento Municipal Utility District	Mike Ramirez	Abstain	
4	Seattle City Light	Hao Li	Negative	
4	Seminole Electric Cooperative, Inc.	Steven R Wallace	Negative	
4	South Mississippi Electric Power Association	Steven McElhaney	Affirmative	
4	Tacoma Public Utilities	Keith Morisette	Affirmative	
4	Wisconsin Energy Corp.	Anthony Jankowski	Abstain	
5	AEP Service Corp.	Brock Ondayko		
5	AES Corporation	Leo Bernier	Affirmative	
5	Amerenue	Sam Dwyer	Negative	
5	Arizona Public Service Co.	Edward Cambridge	Affirmative	
5	BC Hydro and Power Authority	Clement Ma	Abstain	
5	Bonneville Power Administration	Francis J. Halpin	Negative	
5	City and County of San Francisco	Daniel Mason	Abstain	
5	City of Austin dba Austin Energy	Jeanie Doty	Abstain	
5	City of Grand Island	Jeff Mead		
5	City of Redding	Paul Cummings	Affirmative	
5	City of Tacoma, Department of Public Utilities, Light Division, dba Tacoma Power	Max Emrick	Affirmative	
5	Cleco Power	Stephanie Huffman		
5	Cogentrix Energy, Inc.	Mike D Hirst	Affirmative	
5	Colorado Springs Utilities	Jennifer Eckels	Affirmative	

5	Consolidated Edison Co. of New York	Wilket (Jack) Ng	Abstain	
5	Constellation Power Source Generation, Inc.	Amir Y Hammad	Negative	View
5	Cowlitz County PUD	Bob Essex	Affirmative	
5	CPS Energy	Robert Stevens	Affirmative	
5	Detroit Edison Company	Christy Wicke		
5	Dominion Resources, Inc.	Mike Garton	Abstain	
5	Duke Energy	Dale Q Goodwine	Affirmative	
5	Dynegy Inc.	Dan Roethemeyer	Affirmative	
5	Exelon Nuclear	Michael Korchynsky	Affirmative	
5	ExxonMobil Research and Engineering	Martin Kaufman	Negative	
5	FirstEnergy Solutions	Kenneth Dresner		
5	Florida Municipal Power Agency	David Schumann	Negative	View
5	Great River Energy	Preston L Walsh	Affirmative	
5	Green Country Energy	Greg Froehling	Affirmative	
5	Imperial Irrigation District	Marcela Y Caballero	Affirmative	
5	JEA	John J Babik		
5	Kissimmee Utility Authority	Mike Blough	Negative	
5	Lakeland Electric	James M Howard		
5	Liberty Electric Power LLC	Daniel Duff	Negative	View
5	Lincoln Electric System	Dennis Florom	Affirmative	
5	Los Angeles Department of Water & Power	Kenneth Silver	Affirmative	
5	Lower Colorado River Authority	Tom Foreman	Affirmative	
5	Luminant Generation Company LLC	Mike Laney	Affirmative	
5	Manitoba Hydro	S N Fernando	Affirmative	
5	Massachusetts Municipal Wholesale Electric Company	David Gordon	Abstain	
5	MEAG Power	Steven Grego		
5	MidAmerican Energy Co.	Christopher Schneider	Affirmative	
5	Muscatine Power & Water	Mike Avesing	Abstain	
5	Nebraska Public Power District	Don Schmit	Abstain	
5	New Harquahala Generating Co. LLC	Nathaniel Larson	Affirmative	
5	New York Power Authority	Gerald Mannarino	Affirmative	
5	North Carolina Electric Membership Corp.	Jeffrey S Brame	Affirmative	
5	Northern Indiana Public Service Co.	William O. Thompson	Negative	
5	Occidental Chemical	Michelle R DAntuono	Affirmative	
5	Oklahoma Gas and Electric Co.	Kim Morphis		
5	Omaha Public Power District	Mahmood Z. Safi	Affirmative	
5	Orlando Utilities Commission	Richard Kinas		
5	Pacific Gas and Electric Company	Richard J. Padilla		
5	PacifiCorp	Sandra L. Shaffer	Abstain	
5	Platte River Power Authority	Roland Thiel	Affirmative	
5	Portland General Electric Co.	Gary L Tingley	Affirmative	
5	PPL Generation LLC	Annette M Bannon		
5	Progress Energy Carolinas	Wayne Lewis	Affirmative	
5	Proven Compliance Solutions	Mitchell E Needham	Affirmative	
5	PSEG Fossil LLC	Mikhail Falkovich	Abstain	

5	Puget Sound Energy, Inc.	Tom Flynn		
5	Sacramento Municipal Utility District	Bethany Hunter	Abstain	
5	Salt River Project	Glen Reeves	Affirmative	
5	Santee Cooper	Lewis P Pierce	Affirmative	
5	Seattle City Light	Michael J. Haynes	Abstain	
5	Seminole Electric Cooperative, Inc.	Brenda K. Atkins	Negative	
5	Snohomish County PUD No. 1	Sam Nietfeld	Affirmative	
5	South Mississippi Electric Power Association	Jerry W Johnson		
5	Southern Company Generation	William D Shultz	Affirmative	
5	Tampa Electric Co.	RJames Rocha		
5	Tenaska, Inc.	Scott M Helyer	Abstain	
5	Tennessee Valley Authority	David Thompson	Abstain	
5	Tri-State G & T Association, Inc.	Barry Ingold	Affirmative	
5	U.S. Army Corps of Engineers	Melissa Kurtz	Affirmative	
5	U.S. Bureau of Reclamation	Martin Bauer		
5	Western Farmers Electric Coop.	Caleb J Muckala		
5	Wisconsin Electric Power Co.	Linda Horn	Abstain	
6	AEP Marketing	Edward P. Cox	Negative	View
6	APS	RANDY A YOUNG	Affirmative	
6	Associated Electric Cooperative, Inc.	Brian Ackermann	Negative	
6	Bonneville Power Administration	Brenda S. Anderson	Negative	
6	City of Austin dba Austin Energy	Lisa L Martin	Abstain	
6	City of Redding	Marvin Briggs	Affirmative	
6	Cleco Power LLC	Robert Hirchak		
6	Colorado Springs Utilities	Lisa C Rosintoski	Affirmative	
6	Consolidated Edison Co. of New York	Nickesha P Carrol	Abstain	
6	Constellation Energy Commodities Group	Brenda Powell	Abstain	
6	Dominion Resources, Inc.	Louis S. Slade	Abstain	
6	Duke Energy Carolina	Walter Yeager	Affirmative	
6	Exelon Power Team	Pulin Shah	Affirmative	
6	FirstEnergy Solutions	Kevin Querry	Negative	View
6	Florida Municipal Power Agency	Richard L. Montgomery	Negative	View
6	Florida Municipal Power Pool	Thomas Washburn	Negative	View
6	Florida Power & Light Co.	Silvia P. Mitchell		
6	Great River Energy	Donna Stephenson		
6	Imperial Irrigation District	Cathy Bretz	Affirmative	
6	Kansas City Power & Light Co.	Jessica L Klinghoffer	Affirmative	
6	Lakeland Electric	Paul Shipps	Negative	View
6	Lincoln Electric System	Eric Ruskamp	Affirmative	
6	Manitoba Hydro	Daniel Prowse	Affirmative	
6	MidAmerican Energy Co.	Dennis Kimm	Affirmative	
6	New York Power Authority	William Palazzo	Affirmative	
6	Northern Indiana Public Service Co.	Joseph O'Brien	Negative	
6	NRG Energy, Inc.	Alan Johnson		
6	Omaha Public Power District	David Ried	Affirmative	
6	PacifiCorp	Scott L Smith	Abstain	
6	Platte River Power Authority	Carol Ballantine	Affirmative	

6	PPL EnergyPlus LLC	Mark A Heimbach	Negative	
6	Progress Energy	John T Sturgeon	Affirmative	
6	PSEG Energy Resources & Trade LLC	Peter Dolan	Abstain	
6	Public Utility District No. 1 of Chelan County	Hugh A. Owen	Abstain	
6	Sacramento Municipal Utility District	Claire Warshaw	Abstain	
6	Salt River Project	Steven J Hulet	Affirmative	
6	Santee Cooper	Michael Brown	Affirmative	
6	Seattle City Light	Dennis Sismaet	Negative	View
6	Seminole Electric Cooperative, Inc.	Trudy S. Novak	Negative	
6	Snohomish County PUD No. 1	William T Moojen	Abstain	
6	South California Edison Company	Lujuanna Medina	Affirmative	
6	Southern Company Generation and Energy Marketing	John J. Ciza	Affirmative	
6	Tacoma Public Utilities	Michael C Hill	Affirmative	
6	Tampa Electric Co.	Benjamin F Smith II		
6	Tennessee Valley Authority	Marjorie S. Parsons	Abstain	
8		Merle Ashton	Affirmative	
8		Roger C Zaklukiewicz	Affirmative	
8		Kristina M. Loudermilk		
8		Edward C Stein	Affirmative	
8		James A Maenner	Negative	
8	INTELLIBIND	Kevin Conway		
8	JDRJC Associates	Jim Cyrulewski	Negative	
8	Transmission Strategies, LLC	Bernie M Pasternack	Abstain	
8	Utility Services, Inc.	Brian Evans-Mongeon	Abstain	
8	Volkmann Consulting, Inc.	Terry Volkmann		
9	Commonwealth of Massachusetts Department of Public Utilities	Donald Nelson	Affirmative	
10	New York State Reliability Council	Alan Adamson	Affirmative	
10	Northeast Power Coordinating Council, Inc.	Guy V. Zito	Affirmative	
10	ReliabilityFirst Corporation	Anthony E Jablonski	Affirmative	
10	SERC Reliability Corporation	Carter B. Edge	Abstain	
10	Texas Reliability Entity, Inc.	Donald G Jones	Negative	View
10	Western Electricity Coordinating Council	Steven L. Rueckert	Abstain	

Individual or group. (50 Responses)
Name (29 Responses)
Organization (29 Responses)
Group Name (21 Responses)
Lead Contact (21 Responses)
Question 1 (47 Responses)
Question 1 Comments (50 Responses)
Question 2 (42 Responses)
Question 2 Comments (50 Responses)
Question 3 (41 Responses)
Question 3 Comments (50 Responses)
Question 4 (46 Responses)
Question 4 Comments (50 Responses)
Question 5 (41 Responses)
Question 5 Comments (50 Responses)
Question 6 (0 Responses)
Question 6 Comments (50 Responses)

Group
Northeast Power Coordinating Council
Guy Zito
Yes
Maintenance and testing of protection systems is the final step in the process that begins with the calculation of settings. The calculation of settings is followed by the application of those settings to the equipment. Maintenance and testing ensures that the settings given to testing personnel have been applied as given. This Standard addresses the Maintenance and Testing of protection systems. It should also address the need to validate the accuracy of the settings given to the field. A statement should be added to the SAR to address this need.
The focus of the industry is on the field procedures necessary to ensure that protection systems are maintained and tested. This includes the verification that settings have been applied correctly. The accuracy of the settings calculated needs to be validated, and that step should be considered for inclusion in this Standard.
Group
Northeast Power Coordinating Council
Guy Zito
No
Yes
Yes
Yes
Yes
The focus of the industry is on the field procedures necessary to ensure that protection systems are maintained and tested. This includes the verification that settings have been applied correctly. The accuracy of the settings produced needs to be validated, and that step should be considered for

inclusion in this Standard.
Group
Northeast Power Coordinating Council
Guy Zito
The focus of the industry is on the field procedures necessary to ensure that protection systems are maintained and tested. This includes the verification that settings have been applied correctly. The accuracy of the settings calculated needs to be validated, and that step should be considered for inclusion in this Standard.
Group
Arizona Public Service Company
Janet Smith, Regulaory Compliance Supervisor
No
Yes
No
APS has been testing batteries nominally every 4 months plus 25% for over 20 years with no adverse consequences. Requiring a maximum of testing every 4 months doesn't allow for any flexibility, would require an additioal 400 tests per year and APS does not consider the 4 months a maximum time limit for battery testing.
Yes
While we are supportive of the changes the SDT has made, APS is concerned the draft Standard will not give entities the flexibility to continue to improve reliability based on changing industry norms and best practices. In addition, when technology changes for the better, industry will need the flexibility to optimize use of the new technology. Lastly, the more often protection equipment is taken out of service for testing, the more often the line is vulnerable. The balance between the correct amount of testing and correct amount of time the equipment is in the field and in service is an important consideration when assuring the reliability of the BES. APS suggests the general principles of the following two papers be applied to more equipment types than microprocessor relays with self test capabilities. 1) 'An Improved Model for Protective-System Reliability,' P.M. Anderson and S.K. Agrawal, Power Math Associates, Inc., IEEE Transactions on Reliability, Volume 41, No. 3, September 1992; 2) 'Philosophies for Testing Protective Relays,' J.J. Kumm, et. al., Schweitzer Engineering Laboratory, Inc., 48th Annual Georgia Tech Protective Relaying Conference, May 1994.
Individual
Mary Jo Cooper
ZGlobal Engineering and Energy Solutions
Yes
Table 1-4(a-c) excludes distributed UFLS and UVLS for batteries but references Table 3. Table 3 does not mention an interval for batteries. Is this an error?

Group
Southern Company Generation
Bill Shultz
No
No
The measures associated with the requirement that includes this term is non-specific with regards to what an auditor will require as proof of the initiation of resolving the issue. It is suggested that one of these two courses be followed: either a) eliminate the requirement to initate resolution, or b) fully describe what evidence is expected for this part.
Yes
Yes
1) Separating this classification of equipment into its own table is a good idea to make it easier for the owners of this equipment to figure out what they must do. 2) Consider also moving the UVLS note (found in column 1 of Tables 1-4a-d) into the header with the other "UFLS and UVLS note" to simplify the table. The header note could read "Excludes UFLS and UVLS systems - see Table 1-4e for non-distributed UFLS and UVLS systems and see Table 3 for distributed UFLS and UVLS systems"). 3) Table 1-5: Need clarification on "continuity and energization or ability to operate". What does this mean? 4) For UF and UV schemes, Table 3 does not specifically state to check the alarm(s) to a control center (for monitored components). There are some references to Table 2 (i.e. See Table 2), but does that mean that you have to verify the alarm(s)? We think that the Table 2 details need to be included specifically in Table 3. Or, make it very clear that this test is required for UF and UV schemes.
No
Several additional edits are needed so that the document matches the proposed standard: 1) In Section 5.1.1, page 16, add "and Table 3" in the Figure and at the end of FAQ after figure in that section. 2) In Section 7.1, example #1, a 3 month battery interval is shown 3) In Section 8.1.1, a 3 month interval is shown for communication circuit 4) In Section 15.5.1, several references to "3 month" and "three month" intervals are shown for communication circuits. 5) In Appendix B, the formatting is incorrect for Al McMeekin's company name.
1) For Table 1-1 and Table 3, consider adding "(internal to the relay)" to the microprocessor relay 6 calendar year maintenance activities to clarify that these maintenance activities are not related to items external to the relay).
Individual
Nicholas R. Finney
Saft America, Inc.
Yes
Yes
Yes
Yes
Yes
Saft Comments on NERC Standard PRC-005-2 — Protection System Maintenance Please find herein Saft's comments to NERC PRC-005-2 regarding ohmic testing of Nickel-Cadmium (NiCad) batteries. As drafted, the proposed NERC Standard PRC-005-2 will lead to the removal of high quality, reliable NiCad battery power units from Protection Systems, which is counter to the NERC stated purpose of PRC-005-2, which is to 'document and implement programs for the maintenance of all Protection

Systems affecting the reliability of the Bulk Electric System (BES) so that these Protection Systems are kept in working order.' There is broad consensus within the battery industry that ohmic testing of Valve Regulated Lead-Acid (VRLA) batteries provides a means for trending the condition of the battery over time. Such a consensus does not exist for Vented Lead-Acid (VLA) batteries, because ohmic measurements are more difficult to trend, thereby providing a go/no-go assessment of the battery's availability at that precise moment in time, rather than a measure of VLA battery condition. Ohmic testing of NiCad batteries provides a similar go/no-go assessment to ohmic testing of VLA batteries. As with VLA batteries, ohmic testing of NiCad batteries does not provide meaningful trending information, but rather provides a status update of battery condition at a specific moment in time. Due to the similar information provided by ohmic testing of VLA and NiCad batteries, Saft recommends that ohmic testing of NiCad batteries be included under the Maintenance Activities for NiCad batteries. Specifically, Saft recommends that NERC add the following language to the Maintenance Activities column in Table 1-4(d), 'Verify that the station battery can perform as designed by evaluating the measured cell/unit internal ohmic values to station battery baseline', at a maximum maintenance interval of 18 months, as in the requirement for VLA batteries noted in Table 1-4(a).
Group
Westar Energy
Bo Jones
No
Yes
Yes
Yes
Yes
Individual
Tony Eddleman
Nebraska Public Power District
No
Yes
Yes
We agree 4 calendar months is better than 3 Calendar months. The 4 month activities should be removed from Tables 1-4(a,b,c,d). These requirements are blurring the distinction between a best practice and functionally verifying the component. IEEE already sets the industries best practices, if a reliability Standard includes best maintenance practices it is encroaching on IEEE's ability to keep the industry informed and optimized. The Standard Drafting Team should restrain itself to only making requirements that functionally verify components and initiate corrective action wherever possible.
Yes
No
a. On page 26 of the Supplementary Reference document, it states, "If your PSMP (plan) requires more activities than you must perform and document to this higher standard." This penalizes utilities from including best practices in their PSMP, and encourages utilities to implement the standard maintenance practice instead of a higher maintenance practice. Why would a utility accept the additional risk of a NERC penalty or sanction when they can stay in compliance by accepting the

minimum requirements of the standard? By stating this, the PSMP will include only those required items at the minimum frequency to avoid a compliance violation. For the reliability of the BES, recommend the wording be changed to, “If your PSMP (plan) requires more activities than required by PRC-005-2, you will be held accountable only to the minimum requirements in the standard. NERC encourages utilities to implement best practices to improve the reliability of the BES, so utilities will not be penalized for exceeding the standards.” In FERC Order 693, section 278 FERC states: While we appreciate that many entities may perform at a higher level than that required by the Reliability Standards, and commend them for doing so, the Commission is focused on what is required under the Reliability Standards, we do not require that they exceed the Reliability Standards”.

a. Section 4.2.5.4 includes station service transformers for generator facilities. As currently written, the section includes all the protection systems for station service transformers for generators that are a part of the BES. It states, “Protection Systems for generator-connected station service transformers for generators that are part of the BES.” Generating facilities may have transfer schemes on the auxiliary transformer to transfer equipment to a reserve transformer instead of tripping the unit. These protection systems should not be included in the Facilities for PRC-005-2, since the BES is not affected. Recommend changing Section 4.2.5.4 to read, “Protection Systems that trip the generator for generator-connected station service transformers for generators that are a part of the BES.” b. Section 1.3 requires an entity to retain the two most recent performances of each distinct maintenance activity. This is an unreasonable requirement and does not enhance reliability. Recommend the data retention be changed to require only the most recent test record. An audit should be focused on the present day and not in the past. Is an entity compliant today and not can we find a way to issue a fine for something in the past? An example exists where an entity recently registered and tested all their relays prior to registering. They have one set of documentation and not two. Why should they be forced into testing again and incurring additional expense for customers only to have two tests available for an auditor? This does not enhance reliability. PRC-005-2 allows testing intervals of up to 12 calendar years. If we are required to have the two most recent tests, we could conceivably have to retain a relay test record for 24 years! Hypothetically, if we have a test record from ten years ago, but we don’t have the record from 24 years ago, how does that adversely affect the reliability of the BES today? The standard should focus on – Are we compliant today? c. Table 1-5 requires a maintenance activity to, “Verify that each trip coil is able to operate the circuit breaker, interrupting device, or mitigating device.” Recommend this be changed to, “Verify that a trip coil is able to operate the circuit breaker, interrupting device, or mitigating device.” Or alternately, change the wording to, “Electrically operate each interrupting device every 6 years.” While requiring each trip coil to operate the breaker sounds good in theory, practically it creates issues in the field and may create more problems than it solves. The trip coils are located in the panel at the breaker and aren’t configured to test independently. Isolating one trip coil from the other may include “lifting a wire” that may not get landed properly when the test is complete. Then, how do you prove for a compliance audit that both trip coils were independently tested to trip the breaker? Using an actual event only tests one coil and we may not know which coil tripped the device. To be compliant, it isn’t practical to be able to track a real-time fault clearing operation as suggested on page 67 of the Supplementary Reference document. First, we don’t know which trip coil operated, then we have a “one off” device in the substation that must be tracked separately with a different testing cycle from the other devices in the substation – this is a recipe for a compliance violation. The standard should focus on ensuring the control circuitry is intact and trips the breaker without injecting additional, unneeded risk to the BES. d. General comment under Table 1-5: We do extensive testing of the control circuit during commissioning and after a modification to the circuit. Testing of the control circuitry on a periodic basis is not needed. The wear and tear on the equipment from functional testing and the potential risk of the testing itself may create more issues than the benefits received from doing the tests. The functional test injects significant opportunities for human performance errors during the test (technician trips the wrong device, differential relay opens all protective devices for a bus instead of a breaker, technician bumps another relay, screw driver falls into another device, etc.) and latent errors after the test (i.e., if a wire was lifted during the test, was it landed back in proper location, was the relay tripping function activated after the test was completed or was the relay left in test mode, etc.). Request the drafting team provide a basis for requiring the functional test. Are there documented instances where the control circuitry caused a significant event on the BES? Many utilities, including us, monitor our circuit breakers for operations. If a breaker hasn’t operated for a defined period of time, we set up a maintenance activity to operate the breaker (possibly to include a timing test to ensure the breaker clears in the proper amount of cycles) – this ensures the operating linkages aren’t

bound and the breaker will operate. We have many maintenance activities performed on devices for the BES that do not require a NERC standard. If a utility chooses not to perform best practice maintenance, customers will experience more frequent and longer outages. The utility will receive customer feedback on outages which should translate into the utility increasing its maintenance. In other words, we don't have to include a functional test as a NERC requirement. Misoperations are already monitored and reported through PRC-004. Does recent misoperation data or TADS data indicate that control circuitry/trip coils are a problem within the protection and control system? The current version of PRC-005 doesn't require functional tests. What is the basis for requiring additional compliance documentation (additional functional testing)? A possible alternative: only perform testing following modifications or major maintenance (like breaker change outs or panel modifications). e. Recommend NERC provide training specifically on how to audit PRC-005-2 to auditors in all eight Regional Entities. PRC-005 is the most violated standard since enforcement began on June 18, 2007. This is an excellent opportunity for NERC to get all eight regions on the same page for what to audit. NERC provides training on standard auditing guidelines and sample selection, but doesn't provide training on how to audit specific standards. RSAW's and CAN's have been an attempt to get consistency across the regions, but differences are still obvious. NERC is in the perfect position to observe potential violations (PV) from an auditor and as a PV is written that goes beyond the standard or is not in accordance with the initial training; NERC can dismiss the PV and retrain the auditor. Auditors aren't perfect, nor are any of us. Training is a basic tool for the auditor to perform their job properly.
Individual
John Bee
Exelon
No
Yes
Yes
Yes
Yes
Individual
Don Jones
Texas Reliability Entity
No
Yes
(1) General – defined terms need to be capitalized throughout this standard. (2) Requirement R3 only addresses initiation of resolution to any Unresolved Maintenance Issues. Requirement R3 should require completion of corrective action to deal with Unresolved Maintenance Issues within a reasonable timeframe. (3) Section 1.3, Data Retention, should require each entity to keep all versions of its PSMP that were in effect since its last compliance audit, in order to demonstrate compliance at all relevant times (not just the current version). (4) In the Severe VSL for R2, add "Annually" to the second bullet under part 5. (5) The VSLs for R3 should contain a time frame (annual?). The second part of these VSLs should refer to initiation and completion of resolution of Unresolved Maintenance Issues. (See comment on Requirement R3 above.) (6) Consider making the R3 VSLs based on a

percent of the number of maintenance activities required by the PSMP in a stated time period, rather than on a percent of the total number of Components. (7) There is no maintenance activity listed to verify that protection system component settings meet the design intent of the protection system. In other words, there is no required activity to confirm that the “specified” settings are correct and appropriate. This introduces a potential reliability gap into the Protection System maintenance program. (8) In Table 1-1, the term “acceptable measurement of power system input values” is somewhat vague. A tolerance value or reference to industry standards should be provided. (9) In Table 1-3, the activity should include verifying that the current and voltage signal values are within design tolerances, not just that signal values are present. (10) In Table 1-4(a) Component Attributes – the reference to UFLS systems is missing in the exclusion that refers to UVLS systems. (UFLS is included in Tables 1-4(b) through 1-4(d).) (11) In table 1-4(f), there should be a reference to “alarming” in addition to “monitoring” in the first cell of the next-to-last row. (12) In table 1-4(f), why is the last row limited to VRLA station batteries? Should the same exclusion apply to VLA batteries? (13) In Table 1-5, a “12 calendar year” interval is too long for “Unmonitored control circuitry associated with SPS” and “Unmonitored control circuitry associated with protective functions.” We suggest this be changed to 6 years. Similar unmonitored attributes related to battery maintenance have a 6 calendar year interval. (14) In Table 2, the phrase “location where corrective action can be initiated” is unclear, and we suggest that a more definitive description be used. Also, why is the word “DETECTION” in all-caps? (15) In Table 3, the maintenance activity should include verifying that Protection System Component settings meet the design intent of the Protection System. For example, any reclosing function should be disabled on UFLS and UVLS relay systems. (16) In Table 3, In Table 1-1, the term “acceptable measurement of power system input values” is somewhat vague. A tolerance value or reference to industry standards should be provided. (17) The Implementation Plan is overly long and complicated. Entities (including Regional Entities) will have to track and apply multiple versions of this standard for 14 years. It would be preferable to have a much shorter implementation plan, so that only one version of the standard will be applicable, recognizing that for some Components no action will be required under the standard for a number of years.
Individual
Steve Alexanderson
Central Lincoln
No
Either term works if defined properly.
Yes
Thank you for making this change. As we pointed out in draft 2, a three month maximum would require a bi-monthly target to allow for continguencies; increasing maintenance from four times a year (per the IEEE battery standards) to six.
Yes
Yes
We are concerned about what exactly “initiate resolution” means in R3. We foresee this being a potential area of disagreement between registrants and CEAs when a registrant believes an open work order suffices and the CEA wants to see schedules or purchase orders. Neither M3 nor the FAQs address this.
Group
Tennessee Valley Authority
Dave Davidson
No
No
No

No
No
1. It will take several years for TVA to implement checkback on 590 carrier blocking sets on the TVA system and not have to perform the PRC 005-2 requirement of verifying functionality every 4 months with no grace period. TVA carrier failure rate has not increased since the frequency was changed in January 2008 from 4 tests/year to 2 test/year. We are also implementing an extensive PM test in October 2011 which will test 25% of the sets per year and will take readings of SWR, line loss, and receiver margin. 2. TVA disagrees with the requirement to measure internal ohmic values of the station dc supply batteries every 18 months. The interval should be 36 months. Our experience from performing our routine maintenance program including cell impedance testing at 3-year intervals has been that the program is fully adequate in monitoring bank condition. An 18-month interval for internal resistance/impedance testing is an unnecessary burden. 3. Are we required to test the trip circuit between the power transformer sudden pressure relay and the switch house or are we only required to test the trip circuit between the electrical sensing relays and the trip coils of the breakers?
Individual
Dan Roethemeyer
Dynegy Inc.
No
Yes
Yes
Yes
Yes
For Facilities listed under 4.2, are Reserve Auxiliary Transformers supposed to be included?
Group
PNGC Comment Group
Ron Sporseen
No
No
Yes
We agree with this change. Smaller utilities, especially in the WECC region, in many cases have large territories to cover with limited resources. In many instances sub-stations are inaccesible during the winter and the 4 month interval will assist these smaller entities in getting the work done.
Yes
Thank you for the opportunity to comment on the draft Standard PRC-005-2 – Protection System Maintenance. While the feedback from the last round of comments is appreciated, we still cannot support the standard as written due to our concerns outlined here. We appreciate the work that NERC has put into a new standard to encapsulate and replace the current PRC-005, PRC-008, PRC-011 and PRC-017. But, we believe that the draft Standard needs one important revision before the NERC Board of Trustees should approve it. Specifically, NERC should revise the draft version of PRC-005-2

so that the beginning of Section 4.2 reads as follows: “4.2. Facilities: Protection Systems that (1) are not facilities used in the local distribution of electricity, (2) are facilities and control systems necessary for operating an interconnected electric energy transmission network, and (3) are any of the following:” This revision is necessary to capture the limits that Congress placed on FERC, NERC, and the Regional Entities in developing and enforcing mandatory reliability standards. Specifically, Section 215(i) of the Federal Power Act provides that the Electric Reliability Organization (ERO) “shall have authority to develop and enforce compliance with reliability standards for only the Bulk-Power System.” And, Section 215(a)(1) of the statute defines the term “Bulk-Power System” or “BPS” as: (A) facilities and control systems necessary for operating an interconnected electric energy transmission network (or any portion thereof); and (B) electric energy from generation facilities needed to maintain transmission system reliability. The term does not include facilities used in the local distribution of electric energy.” With this language, Congress expressly limited FERC, NERC, and the Regional Entities’ jurisdiction with regard to local distribution facilities as well as those facilities not necessary for operating a transmission network. Given that these facilities are statutorily excluded from the definition of the BPS, reliability standards may not be developed or enforced for facilities used in local distribution. In Order No. 672, FERC adopted the statutory definition of the BPS. In Order No. 743-A, issued earlier this year, the Commission acknowledged that “Congress has specifically exempted ‘facilities used in the local distribution of electric energy’” from the BPS definition. FERC also held that to the extent any facility is a facility used in the local distribution of electric energy, it is exempted from the requirements of Section 215. In Order No. 743-A, FERC delegated to NERC the task of proposing for FERC approval criteria and a process to identify the facilities used in local distribution that will be excluded from NERC and FERC regulation. The critical first step in this process is for NERC to propose criteria for approval by FERC to determine which facilities are used in local distribution, and are therefore not BPS facilities. The criteria to be developed by NERC must exclude any facilities that are used in the local distribution of electric energy, because all such facilities are beyond the scope of the statutory definition of the BPS, which establishes the limit of FERC and NERC jurisdiction. Accordingly, it is critical that NERC draft the new PRC-005-2 standard to expressly exclude facilities used in local distribution. NERC must also expressly exclude from PRC-005-2 those facilities “not necessary for operating an interconnected electric energy transmission network (or any portion thereof)”. Similar to the local distribution exclusion, the facilities not necessary for operating a transmission network are not part of the BPS and therefore must be expressly excluded from the standard. We understand, but disagree with, the argument that, because the FPA clearly excludes local distribution facilities and facilities necessary for operating an interconnected electric transmission network from FERC, NERC, and Regional Entity jurisdiction, it is not necessary to expressly exclude these facilities again in reliability standards. This approach might be legally accurate, but could lead to significant confusion for entities attempting to implement the new PRC-005-2 standard. There are numerous examples of Regional Entities, particularly WECC, attempting to assert jurisdiction over such facilities, and regulated entities face significant uncertainty as to which facilities they should consider as within jurisdiction. Clarifying FERC, NERC, and Regional Entity jurisdiction in the BES definition, even if such clarification is already provided in the FPA, would avoid such problems under the new PRC-005-2 standard. Again, we appreciate the work NERC has put in so far on a new Standard. We look forward to working within the drafting process to help implement our recommended revision.

Individual

Thad Ness

American Electric Power

No

The definition’s wording is satisfactory, and we agree with the removal of “failure of a component to operate within design parameters”. However, we do not agree with the use of the word “unresolved” within the term itself, as we believe this word may convey that the issue was not known or identified. We suggest replacing “Unresolved Maintenance Issue” with “Corrective Maintenance Issue”.

No

Though we agree with extending the interval from what it was previously, AEP recommends that the interval in Table 1-2 for Communications Systems be increased to 6 months.

Yes

No
With such a complex standard as this, the FAQ and Supplementary Reference documents do aid the Protection System owner in demystifying the requirements. However, AEP is uncertain how much weight the documents might carry during audits. We recommend that this additional information be included within the actual standard (for example in an appendix) but in a more compact version. Section 15.7 of the supplementary reference includes the bullet point “No verification of trip path required between the lock-out and/or auxiliary tripping device(s).” This appears to contradict the other bullet points within Section 15.7.
As it stands, if an entity adopts a more stringent maintenance program but fails to meet it, that entity could be found non-compliant despite continuing to abide by the minimum requirements of the standard itself. Entities should have the ability, if they so choose, to include additional maintenance activities or more stringent intervals than specified within the standard without concern of penalty in the event they are unable to accomplish them. In short, entities should only be audited against the requirements stated within the standard. Table 1-3 of the standard lists the minimum required maintenance activities for voltage and current sensing devices as "Verify that current and voltage signal values are provided to the protective relay." Consistent with Table 1-3, Section 15.2.1 of the Supplementary Reference states that an entity “...must verify that the protective relay is receiving the expected values from the voltage and current sensing devices...” The Supplementary Reference further offers examples of how this requirement may be satisfied with most examples referencing the need to verify the signal at each relay in the circuit. We recognize the need to verify a voltage signal at each protective relay, as these devices are wired in parallel and an open circuit at one location may not impact the other devices on the circuit. However, we do not agree that there is a need to verify a current signal at each protective relay. Current devices are wired in series, and an open circuit at any location will impact all other devices on the circuit. For this reason, a single measurement of the current circuit is sufficient. We recommend updating Table 1-3 and the supplementary reference to account for the different physical characteristics of voltage and current circuits. This standard encompasses a very broad range of component types and functionality across broad segments of the BES. The proposed VSLs and VRFs place the same level of severity or priority on facilities that serve local load with that of an EHV facility. The percentages indicated in the VSLs seem to be too strict based upon the vast quantity of elements in scope and broad range of application. Other standards have applicability for certain thresholds of voltage levels, etc. Why not this standard as well?
Individual
Eric Ruskamp
Lincoln Electric System
No
Yes
Yes
Yes
No
Please see the comments submitted by the MRO NSRF.
In reference to the zero tolerance policy evident within PRC-005-2, LES offers the following suggestion: Set up an annual review of a random set sample (20% for example) of Protection System equipment to self-verify compliance. If issues arise, allow the entity the opportunity to correct the issue, make the necessary procedural and/or documentation adjustments and not be considered non-compliant. The idea is to allow entities the opportunity to continually improve their practices and procedures; in essence, allow them to show they are attempting to follow a “culture of compliance”. If habitual problems arise, then non-compliance will be evident. One example that justifies this approach is software glitches or improper programming. As more and more systems become automated, scheduling of maintenance will be done automatically through various types of software.

If a program has even one attribute set incorrectly, it could not function as intended and would potentially set up incorrect intervals for maintenance and testing. It was not intended this way by the entity and they are not intentionally disregarding the standards, but could nevertheless be put in a situation where a maintenance interval is missed. An annual review would catch things like this and allow an entity to continuously improve their program without self-reporting. This concept is expanded from a current draft version of several CIP standards; therefore, it is being at least considered by other drafting teams.
Group
Tacoma Power
Max Emrick
No
Yes
Yes
A similar change in interval should be applied to intervals of “6 calendar months".
Yes
Yes
It is not clear to what extent can an entity (or auditor) can rely on information contained within the Supplementary Reference to support their position during an audit. There is a disclaimer at the beginning of the Supplementary Reference stating that “this supplementary reference to PRC-005-2 is neither mandatory nor enforceable.” It seems that interpretation of the draft standard depends heavily upon this Supplementary Reference. At the same time, the Supplementary Reference does not rise to the level of a standard.
1. The implementation plan for R2 and R3 is unclear on whether each maintenance activity has its own implementation schedule. The implementation plan can also be interpreted to mean that the implementation schedule for a given protection system component is driven by the smallest maximum maintenance (allowable) interval. For example, for unmonitored communications systems, it is unclear whether all maintenance activities indicated in Table 1-2, including those corresponding to 6 calendar years, must be completed on all unmonitored communications systems by the first calendar quarter 15 months following applicable regulatory approval, or if this timeline only applies to the maintenance activity specified in Table 1-2 corresponding to a maximum maintenance interval of 4 calendar months. 2. Assuming that there is a different implementation schedule for different maintenance activities for some protection system component types (namely station DC supply and communication systems), the middle bullet on page 1 of the implementation plan does not seem to consider that it may not be possible to identify whether some protection system components are completely being addressed by PRC-005-2 or the Program developed for the previous standards. In other words, during implementation, some maintenance activities for the same protection system component may be addressed by PRC-005-2, while other maintenance activities may be addressed by the Program develoepd for the previous standards. 3. It is unclear whether control circuitry (trip paths) from protective relays that respond to mechanical quantities is included. This issue is addressed in the supplementary reference but is vague in the draft standard itself. 4. This draft of PRC-005-2 requires the Protection System Maintenance Program (PSMP) to “include all applicable monitoring attributes and related maintenance activities” per the Tables and requires an entity to “implement and follow its PSMP.” Under the draft standard, it is unclear whether an entity has to document in the PSMP and/or maintenance records how they accomplish(ed) the maintenance activities or simply to indicate that the maintenance activities are included and have been completed within the defined intervals. It is clear that entities are afforded some latitude in how they conduct the required maintenance activities. However, the level of detail required to document (1) how an entity chooses to perform the maintenance activities and (2) that applicable maintenance activities have been completed is not clear. 5. In Table 1-2, there is a maintenance activity related to communication systems to “verify essential signals to and from other Protection System components.” It is unclear if this statement is referring to control circuitry associated with the communication system end devices, end device input and output operation (as in Table 1-1 for protective relays), or

something else. It is recommended that the requirement be to “verify operation of communictation system inputs and outputs that are essential to proper functioning of the Protection System.” This language is consistent with that used for protective relays in Table 1-1. 6. Referring to Table 1-2, it is unclear whether an entity has the sole authority decide which ‘performance critera’ are ‘pertinent.’ Additionally, it is unclear if an entity must document the ‘communications technology applied’ and the associated ‘performance criteria’ in its PSMP. 7. In Table 1-4, it is unclear if there is a distinction between the terms ‘resistance’ and ‘ohmic values.’ If there is a distinction, then this distinction should be clarified. 8. In Table 1-4, it is unclear if there is a distinction between the terms ‘battery terminal connection resistance’ and ‘unit-to-unit connection resistance.’ If there is a distinction, then this distinction should be clarified. 9. In Table 1-4, replace the term ‘resistance’ with ‘impedance.’ 10. Recommend that the 6 calendar month interval in Table 1-4(b) be lengthened to 18 calendar months to be more consistent with similar maintenance activities for other battery types. At minimum, lengthen the interval to at least 7 calendar months in a similar way that 3 calendar months was lengthened to 4 calendar months for other maintenance activities. 11. Referring to Table 1-5, no periodic maintenance is required for “control circuitry whose continuity and energization or ability to operate are monitored and alarmed.” It is unclear whether or not it is acceptable to verify DC voltage at the actuating device trip terminals at least once every 12 calendar years for “unmonitored control circuitry associated with protective functions.” It is recommended that periodically verifying DC voltage in this manner be an acceptable means of accomplishing the maintenance activity identified in Table 1-5 for unmonitored control circuitry associated with protective functions. 12. Referring to 4.2. Facilities of the draft standard, it is unclear whether protection systems for transformers that step down from over 100kV to below 15kV are applicable to the standard. Even if there are normally-open distribution feeder ties for purposes of transferring load in a make-before-break fashion, these transformers are generally not considered BES elements. 13. Referring to 4.2.5 of the draft standard, it is unclear whether protection for generator excitation systems are applicable to the standard. 14. It is unclear whether external timing relays (e.g., Zone 2) are considered control circuitry components (like lockout and auxiliary relays) or protective relay components.
Individual
Joe O'Brien
NIPSCO
No
The new standard itself, the implementation plan and supplemental reference/FAQ makes up more than 100 pages of material. Granted that several standards are being combined here, still it is simply too involved to monitor. And there is still not enough detail in the standard leaving items which are ambiguous and open to interpretation, and therefore open to fines. In order to remove such interpretation, maintenance documentation will need to be precise and extensive. This will necessitate more and more staff to control and validate data. Adding staff is great but it does not seem to ensure that there is increased reliability.
Individual
Edward Davis
Entergy Services
No
Yes
Yes
Yes

Yes
We understand and disagree with the SDT position on the following recommendation. We do not agree with proposed Section 4.2.1 applicability since it captures only a portion of the previously approved applicability Interpretation (PRC-005-1a) which was developed specifically for PRC-005-1. We suggest the draft standard be revised to conform to the wording in the Interpretation: “Protection Systems that are installed for the purpose of detecting faults on BES Elements (lines, buses, transformers, etc.) and trips an interrupting device that interrupts current supplied directly from the BES Elements.”
Group
Bonneville Power Administration
Chris Higgins
No
No
BPA agrees that the term “Maintenance Correctable Issue” is an improvement over “Unresolved Maintenance Issue”, however, BPA feels that the idea of a “Maintenance Correctable Issue” is very vague, and would perhaps be better left out of the standard. As written, it is unclear when an issue is a “Maintenance Correctable Issue” and exactly how it has to be dealt with. R3 requires the initiation of resolution of any unresolved maintenance issues.
Yes
Yes
Yes
BPA understands that the VSLs for R3 are based on the percentage of unresolved maintenance issues that an entity has failed to initiate a resolution for. This approach penalizes an entity for having less unresolved maintenance issues. For example, if an entity has only one unresolved maintenance issue and it failed to initiate a resolution for it, it would have failed to initiate a resolution for 100% of its unresolved maintenance issues, which would be a severe VSL. If another entity had 100 unresolved maintenance issues, and it failed to initiate resolution on ten of them, it would have failed to initiate a resolution on 10% of its unresolved maintenance issues, which would be a high VSL. Most likely, the first entity is doing a better job with its maintenance than the second entity, but the first entity receives a more severe penalty. The VSL for R3 is not an accurate measurement of a maintenance program’s effectiveness and needs to be revised. BPA recommends removing the entire “Unresolved Maintenance Issue” topic from the standard. In Table 1-1, it is not clear when a microprocessor relay meets the requirement for internal self-diagnosis and alarming. It is not clear that any microprocessor relay with a relay failure alarm would meet this requirement. BPA believes that it seems like an omission in Table 1-1 for unmonitored microprocessor relays, the verification of settings is not included as a maintenance activity. BPA would also like to recommend clarifying language stating that the owner of the asset is the responsible entity.
Group
Progress Energy
Jim Eckelkamp
No
Yes
Yes

Yes
• Standard, Table 1-4(a), second sentence under Component Attributes, should state “Protection System Station dc supply for non-BES interrupting devices for SPS or non-distributed UFLS and UVLS systems are excluded….” As written, the statement does not include the phrase “UFLS and.” I believe it should. • Supplemental, Section 13, 2nd paragraph, first sentence should state: “…device match the minimum requirements listed in Tables 1 and 3.”
Individual
Michael Falvo
Independent Electricity System Operator
No
Yes
The IESO agrees with the revision to the term. However, we observed the inconsistent format of this defined term used throughout the draft standard and would like to point it out to the Drafting Team. The capitalized term “Unresolved Maintenance Issue” is defined on Page 2 and used as a capitalized term in the blue box on Page 5. The defined term was made lowercase and used in other areas of the document as “unresolved maintenance issues” (eg. Page 5 and Page 8). We recommend that the format of this defined term be consistent throughout the draft standard.
Yes
Yes
Yes
The IESO disagrees with the concept that auditors use the standards as minimum requirements and evaluate compliance based on a registered entity’s own governance. We believe that the entity could be found non-compliant with Requirement R3 if they fail to follow the internal maintenance intervals established in their PSMP, even though actual maintenance intervals are no less frequent than the prescribed maximum intervals established in the draft standard. The potential for such a finding will discourage conscientious entities from setting higher internal targets for their planned maintenance and promote compliance with only the minimum requirements of the standard. We therefore propose the following revision to Requirement R3: R3. Each Transmission Owner, Generator Owner, and Distribution Provider shall implement and follow its PSMP and initiate resolution of any unresolved maintenance issues. In the case of time-based maintenance programs, each Transmission Owner, Generator Owner, and Distribution Provider is permitted to deviate from its PSMP provided that actual maintenance intervals do not exceed those specified in Tables 1-1 through 1-5, Table 2 and Table 3. [Violation Risk Factor: High] [Time Horizon: Operations Planning]
Individual
Daniel Duff
Liberty Electric Power LLC
No
Yes
Yes
Yes
No
The reference contains language which makes it a violation should an entity choose a cycle time less than the maximum from the table, and then fail to meet that cycle. (see page 27, "If your PSMP

(plan) requires activities more often than the Tables maximum then you must perform and document those activities to your more stringent standard.") There is no reason to hold a RE in violation if all work is performed within the maximum time from the table - either there was no reliability risk, or the table is incorrect and a reliability risk in itself.
With the development and publication of maximum maintenance and testing intervals (the Tables), there is no longer a reliability need for a RE to identify the associated maintenance intervals for Protection System Components. Further, REs who wish to perform these activities in shorter intervals than those allowed by the standard (See Supplementary Reference, page 27,"If your PSMP (plan) requires activities more often than the Tables maximum then you must perform and document those activities to your more stringent standard.")As noted in Question 5, if the entity completes all activities within the maximum interval allowed by the standard, there can be no reliability concern; if there is a reliability issue, then the table interval is incorrect. I would suggest the following changes. 1. Change R1.2 to read "Identify any Protection System component where the RE is using a performance based maintenance interval. No batteries associated with the station DC supply component type of Protection System shall be included in a performance based system". 2. Change R1.3 to read "The intervals for time-based programs are established in Table 1-1 through 1-5, Table 2, and Table 3". 3. Change M1 to add the phrase "for performance-based components" after the words "maintenance intervals". 4. In M1, replace the words "the type of maintenance program applied (time-based, performance based, or a combination of these maintenance methods)' with the words "the identification of any protection system components using performance based intervals".
Group
Dominion
Mike Garton
No
Yes
Yes
Yes
Yes
Individual
Kirit Shah
Ameren
No
Yes
Yes
Our experience with a very large number of communication systems and station dc supplies substantiates an even longer interval as sufficient for reliable Protection Systems.
Yes
Please consistently state UFLS before UVLS; Table 1-4(e) differs from other parts of the standard.
Yes
1) Although the explanation of ‘Restore’ is enlightening on page 12, ‘Restore’ no longer appears in the PS Maintenance definition in the last few drafts. We disagree with the added burden of retaining maintenance records for removed or replaced equipment. This will actually reduce reliability because of the confusion it can cause as to what equipment is providing BES protection. At most, only the last maintenance date of the removed or replaced component should be retained if there’s really a need to

prove that the interval was met regarding the BES protection. 2) Remove 'Reverse power relays' from the list on page 32. They provide thermal of the steam turbine, not electrical protection of the generator.
(1)Measure M3 on page 5 should only apply to 99.5% of the components. Please revise to state: "Each … shall have evidence that it has implemented the Protection System Maintenance Program for 99.5% of its components and initiated…." PRC-005-2 unrealistically mandates perfection without providing technical justification. A basic premise of engineering is to allow for reasonable tolerances, even Six Sigma allows for defects. Requiring perfection may well harm reliability by distracting valuable resources from higher priority duties concerning the Protection System. We are not asking for the VSL to be changed. No one is perfect and it is impractical to imply perfection is achievable. The consequence of a very small number of components having a missed or late maintenance activity is insignificant to BES reliability. Our proposed reasonable tolerance sets an appropriate level of performance expectation. We disagree with the notion that this is "non-performance".(2)2. An alternate approach regarding the unrealistic perfection of M3 is to correctly recognize that the protection of the primary BES is the objective. Most Protection Systems are redundant by design and the entity needs to be afforded the opportunity to show that a redundant component met the PSMP thereby providing the required protection. The entity should be allowed a reasonable time frame of one calendar increment to maintain the component in question. Our concern stems from the tens of thousands of components in a PSMP, and the reality that rarely but occasionally a data base error or outage scheduling issue may result in a very small number component exceeding their maximum interval. As long as the entity can show that BES protection was sustained and maintains the component quickly (e.g. within one calendar month of discovery), BES reliability has been maintained. (3) Now that FERC has approved the Project 2009-17 Interpretation, please acknowledge more directly in the Supplement that the 'transmission Protection System' that is now approved. NERC interprets "transmission Protection System," as it appears in Requirements R1 and R3 of PRC-004-1 and Requirements R1 and R2 of PRC-005-1, to mean "any Protection System that is installed for the purpose of detecting faults on transmission elements (lines, buses, transformers, etc.) identified as being included in the Bulk Electric System (BES) and trips an interrupting device that interrupts current supplied directlyfrom the BES."
Group
FirstEnergy
Sam Ciccone
No
Yes
Yes
Yes
No
We do not agree with aspects of the Supplementary Reference document as discussed in Question 6.
1. We remain concerned with the proposed draft version of Requirement R3 as well as the SDT developed statements in the Supplementary Reference & FAQ. The SDT's approach sends industry the wrong message; a message that entities should not go beyond what is in the text of the standards and that in some cases they can even be found non-compliant by failing to meet their own more stringent internal practice. We have sent NERC Staff and Drafting Team leaders a separate document detailing our concerns as well as proposed redlines to the standard. The separately provided document can be viewed as FE's ballot comments. 2. FE supports the standard from a technical standpoint but offer the following additional comments and suggestions: A clarification to the supplementary reference document is necessary regarding Maintenance Activities specified for electromechanical lockout and/or tripping auxiliary devices, as specified in Table 1-5 of the standard. The standard states, "Verify electrical operation of electromechanical trip and auxiliary tripping devices" which must be performed every 6 years. A question was asked during the September 15th Webinar requesting clarification of what "verify electrical operation…." meant. The verbal response

from the SDT member was that this involves verifying that the relay actuates, but does not require verification that its contacts changed state. However, the answer to the question at the bottom of page 29 and top of page 30 in the Supplementary Reference and FAQ (dated July 29, 2011) implies that checking the contacts is necessary. The following statement in the published answer makes this clarification request necessary; “Auxiliary outputs not in a trip path (i.e. annunciation or DME input) are not required, by this Standard, to be checked.” This statement implies that if outputs to annunciators and DME inputs do not need to be checked, then the other outputs do need to be checked. Verification of the auxiliary tripping relays appears to be covered in Table 1-5 of the standard under the "Unmonitored control circuitry associated with protective functions" section at 12 calendar years. Thus, we ask the SDT clarify in the supplementary reference the type of maintenance activities required for electromechanical lockout and/or tripping auxiliary devices to satisfy the requirements of Table 1-5 of the standard. Since the standard specifically dictates the output contacts verification for protective relays under Table 1-1, the output contacts of aux tripping relays is left up to interpretation. Therefore, we suggest the following statement be added after “Auxiliary outputs not in a trip path (i.e. annunciation or DME input) are not required, by this Standard, to be checked.” on page 30 of the document: “Auxiliary outputs that are in the trip path shall be maintained as detailed in Table 1-5 of the standard under the ‘Unmonitored control circuitry associated with protective functions" section’ at 12 calendar years.”
Individual
Michael Lombardi
Northeast Utilities
No
Yes
Yes
Yes
The migration of the UFLS and UVLS requirements to Table 3 is appreciated. The Table 3 Component Attributes in rows 6 and 7 (“Control circuitry between the UFLS or UVLS relays and electromechanical lockout and/or tripping auxiliary devices” and Electromechanical lockout and/or tripping auxiliary devices associated only with UFLS or UVLS systems” respectively) do not identify that the trip coils are excluded. Although row 9 states “Trip coils of non-BES interrupting devices in UFLS or UVLS systems” do not have any period maintenance specified, our recommendation is to annotate rows 6 and 7 to explicitly indicate the trip coils are excluded.
Yes
1. The definition of “Component” in PRC-005-2 Draft 1, states “Another example of where the entity has some discretion on determining what constitutes a single component is the voltage and current sensing devices, where the entity may choose either to designate a full three-phase set of such devices or a single device as a single component.” However, in Section 15.2 of Supplementary Reference & FAQ it states: “The intent of the maintenance activity is to verify the input to the protective relay from the device that produces the current or voltage signal sample.” Please consider reconciling these two sections (definition of “Component” and Section 15.2) to allow the entity to consider a relay as the single component versus the voltage and current sensing devices, and pursuant with Section 15.2 perform the voltage and current checks to the inventoried relays. This approach will ensure that the CT and PT check to each relay is performed. 2. Section 15.2 of Supplementary Reference & FAQ states in the second paragraph “The intent of the maintenance activity is to verify the input to the protective relay from the device that produces the current or voltage signal sample.” Please consider revising the last bullet in Section 15.2, paragraph 3 from “Any other method that provide documentation that the expected transformer values as applied to the inputs to the protective relays are acceptable” to “Any other method that verifies the input to the protective relay from the device that produces the current or voltage signal sample.” 3. As shown (see Figure A-2) and discussed in Appendix A of Supplementary Reference & FAQ list, there are four elements that are not verified. Following the identification of the four elements that are not verified, a

practical solution is provided for testing methods on three of the four elements. Please provide a practical solution for the fourth element.
Group
Southwest Power Pool Standards Review Group
Robert Rhodes
No
Yes
Yes
Yes
Yes
1. Please update Appendix B, Drafting Team Members, of the Supplementary Reference document. 2. We request that the detail for the breaker failure protection for generator protection in the bulleted list at the bottom of page 31 and the top of page 32 of the Supplementary Reference document be removed. We are not sure what the SDT is looking for here since there are several types of breaker failure protection. 3. We ask that Section 4.2.5.4 of the draft standard under the Facilities be modified to read 'Protection Systems that trip the generator for generator-connected station service transformers for generators that are part of the BES.' 4. We suggest that Section 1.3 Data Retention be rewritten to provide clarification that no data prior to the date of the last audit need be retained.
Individual
Gary Kruempel
MidAmerican Energy Company
No
Yes
Requirement R3 includes the following: “and initiate resolution of any unresolved maintenance issues”. For clarification it is recommended that the following change be made to this phrase: “initiate resolution of any unresolved Protection System maintenance issues”. Also it is recommended that the following be added to the list in M3: “work management system information”.
Yes
None
Yes
None
Yes
The changes to the “Supplementary Reference” document appear to be acceptable, but the following are suggested as changes to enhance clarity. On page 9 of the Supplementary Reference and FAQ draft the following statement is included: “Relays that respond to non-electrical inputs or impulses (such as, but not limited to, vibration, pressure, seismic, thermal or gas accumulation) are not included.” On page 67, the third sentence of Section 15.3 states: “It includes [referring to control circuitry] the wiring from every trip output to every trip coil.” Later in that section the following is included: “…from a protective relay that are necessary for the correct operation of the protective functions.” While this later statement may be interpreted to exclude circuitry associated with relays that do not respond to non-electrical inputs or impulses it would be better to make this more explicit. It would seem illogical to require testing of circuitry that is not needed for the protective functions covered by the standard. It is suggested that a sentence like the following be added to the first paragraph of Section 15.3: “Control circuitry associated with relays that respond to non-electrical inputs or impulses is not covered by this standard and need not be tested.” On page 31 of the Supplementary Reference it indicates that a procedure that includes intervals less than the standard

could result in a noncompliance finding even if the maximum intervals in the standard are complied with. This is contrary to previous Commission rulings on what is mandatory and enforceable (i.e. only the standard itself Ref. Order 733 p105). This FAQ response should be changed to reflect those rulings.

The following comment was submitted in the last comment period: In the background section of the implementation plan in item two it states "..it is unrealistic for those entities to be immediately in compliance with the new intervals." Recent compliance application notices indicate that auditors are requiring entities to include proof of compliance to maintenance intervals by providing the most recent and prior maintenance dates. The implementation document could be improved by providing clarity to what is expected with regard to when an entity is expected to provide evidence of maintenance interval compliance given the quoted item above. As an example in the section the implementation plan for a 6 year interval item it states: " The entity shall be at least 30% compliant on the first day of the first calendar quarter 3 years following applicable regulatory approval.." In keeping with the previously quoted "reasonableness" criteria it would seem that 30% compliant would mean only one test action would be needed to be completed by the indicated deadline and the next one would be required no later than 6 years from that first test. It is recommended that the implementation plan document be improved to clarify this issue. The consideration of comments response to the above did not completely address the issue that led to the comment. In the Tables in PRC-005-2 there are maintenance items that an entity may not have had in their PRC-005-1 compliance program even though they did have a compliant maintenance program (e.g. battery continuity testing) for that Protection System component. As the transition is made to the PRC-005-2 requirement the above clarification should be made to better define what achievement of PRC-005-2 compliance is for that component. Section 4.2.2 includes UFLS systems installed per the ERO requirements - excluding any additional UFLS systems that a utility has on their system. Section 4.2.3 includes UVLS systems "installed to prevent system voltage collapse or voltage instability for BES reliability". It is assumed that this would only include UVLS systems required by the ERO, but it is not clear as to what is in scope. It is suggested that the wording of 4.2.3 be changed to match the wording in 4.2.2. In the implementation plan in the R2 and R3 requirements plans, in item a. of each there is a parenthetical statement regarding generating plant scheduled outage intervals. A similar parenthetical statement should be added to the b. and c. items of each of these plans. The purpose statement of the standard seems to be inconsistent with the applicability section. To correct this it is suggested that the words "affecting the reliability" be removed from the purpose statement. For consistency with the changes from 3 months to 4 months in the tables of the standard it is suggested that the second item in Table 1-4(b) be changed from 6 calendar months to 7 calendar months. In the tables for dc Supply the term "unit-to-unit" is used along with "intercell" when referring to measurement of connection resistance. From the applicable IEEE standards (e.g. IEEE 450) the standard terminology seems to be "intercell". It is recommended that the "unit-to-unit" term be removed to avoid confusion regarding what is to be verified.

Individual

Joe Petaski

Manitoba Hydro

No

Detailed Description: The phrase "Transmission & Generation Protection Systems" used in paragraph 1 should be "Transmission and generation Protection Systems". "Transmission" and "Protection System" are defined words in the NERC Glossary of Terms; "Generation" is not a defined term and should not be capitalized. Applicable Reliability Principles: Is item 4 [Plans for emergency operation and system restoration of interconnected bulk electric systems shall be developed, coordinated, maintained and implemented.] applicable to Protection System Maintenance?

Yes

No

Manitoba Hydro maintains that the battery inspection interval should be extended to 6 months. The 4 month interval is too frequent based on our experience and while IEEE std 450 (which seems to be the basis for table 1-4) does recommend intervals, it also states that users should evaluate these recommendations against their own operating experience. Our experience shows that 6 month battery inspections are more than adequate to maintain system reliability. Manitoba Hydro has more than ten

years of experience using its existing battery inspection intervals, and Manitoba Hydro's reliability data has proven that the 6 month inspection interval is suitable for Manitoba Hydro. Manitoba Hydro's battery maintenance tasks were derived from a reliability study of Manitoba Hydro stationary batteries, and the tasks and intervals are suitable given Manitoba Hydro's installed plant, design criteria, climate, and reliability performance. A more frequent inspection interval might be more suitable to specific utilities with material differences in climate, design, installed apparatus, and performance, but it is not suitable for Manitoba Hydro and may be more than is required for many other utilities. To use a more frequent inspection interval would significantly penalize Manitoba Hydro which has been diligently performing battery inspections for many years, with no resulting increase in reliability. With the 4 month battery check frequency and no allowance for a grace period, there may be a negative impact on reliability caused by diverting resources away from projects that are critical to reliability to meet this maintenance interval.

Yes

No

Page 26: In both the industry webinar discussion and the supplementary reference document, it was indicated that if an entity had more maintenance activities in its plan than the minimum required by PRC-005-2, then an entity would be audited to the "higher standard". We understand that an entity could write some flexibility in its program, as long as the NERC minimums were met. We are concerned that auditing to the "higher standard" could discourage entities from performing maintenance tasks beyond the NERC minimum criteria. The discussion on page 9 indicates that although the relays which respond to mechanical parameters are not included in the scope of PRC-005-2, the associated trip circuits are included. We suggest that neither the relays which respond to mechanical parameters nor their associated trip circuits are within the scope of this standard. References to the tables should be consistently updated to include the new Table 3. "Every 3 calendar months" should be updated throughout the document to "Every 4 calendar months". For example, Page 23: Example #3 should be revised. In addition, there are a number of grammatical errors in the document, particularly capitalization and punctuation, which make it difficult to read. There are terms which are improperly capitalized implying that they are approved NERC Glossary of Terms definitions when they are not.

-Definition of Protection System Maintenance Program: The definition included in the proposed PRC-005-2 is not the same as the definition provided in the document "Definition for Approval", which also includes items "Upkeep" and "Restore". Regarding the words "proper operation of malfunctioning components is restored."; instead of focusing on the component, we suggest that the definition refer to the restoration of correct function, since some malfunctioning components will not be repairable and will need to be replaced. Although the supplementary document expands on the intended definition of "restore", this is not evident in the proposed stand-alone definition of Protection System Maintenance Program. Referring instead to restoration of proper Protection System function does not strictly require the restoration of a failed component. Suggested wording: Return the Protection System to correct function and proper operation. -We do not agree with the prescribed phased implementation plan. Entities should be given a single compliance date for each of the maintenance intervals, and be allowed the flexibility to schedule and complete their maintenance as required while transitioning to the defined time intervals in PRC-002-2. For example, if a maximum maintenance interval is 6 calendar years, the implementation plan should only require that "The entity shall be 100% compliant on the first day of the first calendar quarter 84 months following applicable regulatory approval, or in those jurisdictions where no regulatory approval is required, on the first day of the first calendar quarter 96 months following Board of Trustees adoption." (item 4c.). The existing standard PRC-005-1 already requires protection systems to be maintained as part of a program. Prescribing how an entity must reach full compliance will provide a negligible improvement in reliability, while significantly increasing the compliance burden. PRC-005-2 affects a large number of assets, and proving compliance for prescribed percentages of assets during the transition period creates unnecessary overhead with no added value. We suggest that items 3a., 3b., 4a., 4b., 5a. and 5b be removed from the implementation plan. -Grace periods should be permitted on the maintenance time intervals. While we understand that grace periods can be built into a PSMP, maintenance decisions that compromise reliability may still have to be made just to meet the specified time intervals and avoid penalty. An example of this would be removing a hydraulic generator from service at a time of low reserve to meet a maintenance interval and avoid non-

compliance. Grace periods are also required in the case of extreme weather conditions. Such conditions may make it unsafe to perform maintenance within the maintenance interval (for example, performing a battery inspection at a remote station during severe winter weather) or may create a risk to reliability if the equipment being maintained is removed from service during these conditions. Utilities need to retain a reasonable amount of discretion and flexibility to make maintenance decisions that are best for safety and reliability without risking non-compliance. In addition, we disagree with the basis that the Drafting Team has established that grace periods are not permitted because of FERC Order 693 which requires that 'maximum' time intervals are established within PRC-005-2. With grace periods, a maximum time interval obviously becomes the required maintenance interval plus the maximum permitted grace period. So we strongly feel that grace periods can be added to the standard while adhering to the FERC Order. We also disagree with the line of reasoning that the Drafting Team used to establish the maximum maintenance intervals for relays as outlined on page 38 of the Supplementary Reference and FAQ document. To our knowledge, no document has been produced which provides evidence of maximum time intervals that work well for 'maintenance cycles that have been in use in generator plants for decades'. Our Protection Systems Maintenance experience indicates that the proposed intervals are acceptable as nominal time intervals with grace periods, but not as maximum time intervals without grace periods. Without a grace period, the bulk of protection maintenance on a six year maintenance cycle will have to be done one year earlier than previously required, in order to allow for the last year of the maximum interval to be used as the grace period. Manitoba Hydro considers this an unnecessary burden on resources with no benefit to reliability. Manitoba Hydro recommends that grace periods be permitted within PRC-005-2 if an entity can demonstrate a reliability or safety related need for using a grace period. This would require the Drafting Team to develop reliability-related criteria for using a grace period.
Individual
Andrew Z. Pusztai
American Transmission Company
No
Yes
Yes
Yes
No
ATC provides the following suggestions for change: Page 9, "Is a Sudden Pressure Relay an auxiliary tripping relay? " During the webinar on Thursday, September 15th it was asked whether the trip path for a sudden pressure relay needed to be confirmed. Based on this question, we believe that the FAQ should be modified as follows: Is a Sudden Pressure Relay an auxiliary tripping relay? No. IEEE C37.2-2008 assigns the device number 94 to auxiliary tripping relays. Sudden pressure relays are assigned device number 63. Sudden pressure relays are excluded from the Standard because it does not utilize voltage and/or current measurements to determine anomalies. Since the sudden pressure relay is not included, it also follows that trip path testing for this relay type is also excluded. Page 78, last paragraph: If the same type of ohmic testing is done (impedance, conductance or resistance), modify the FAQ to allow the use of a different manufacturer's test equipment to conduct the testing. Page 80, second paragraph: "The verification of the dc supply voltage is simply an observation of battery voltage to prove that the charger has not been lost or is not malfunctioning." Insert the following: "A reading taken from the battery charger panel meter will meet this requirement." "The maintenance activity of verifying the float voltage of the battery charger is not to prove that a charger is lost or producing high voltages on the station dc supply, but rather to prove that the charger is properly floating the battery within the proper voltage limits." Insert the following. "A reading taken from the battery charger panel meter will meet this requirement."
a) Change the text of "Standard PRC-005-2 – Protection System Maintenance" Table 1-5 on page 19, Row 1, Column 3 to: "Verify that each a trip coil is able to operate the circuit breaker, interrupting device, or mitigating device." Or alternatively, "Electrically operate each interrupting device every 6

years" Trip coils are designed to be energized no longer than the breaker opening time (3-5 cycles). They are robust devices that will successfully operate the breaker for 5,000-10,000 electrical operations. The most likely source of trip coil failure is the breaker operating mechanism binding, thereby preventing the breaker auxiliary stack from opening and keeping the trip coil energized for too long of a time period. Therefore, trip coil failure is a function of the breaker mechanism failure. Exercising the breakers and circuit switchers is an excellent practice. We would encourage language that would suggest this task be done every 2 years, not to exceed 3 years. Exercising the interrupting devices would help eliminate mechanism binding, reducing the chance that the trip coils are energized too long. The language as currently written in Table 1-5 row 1, will also have the unintentional effect of changing an entities existing interrupting device maintenance interval (essentially driving interrupting device testing to a less than 6 year cycle). b) Change the text of "Standard PRC-005-2 – Protection System Maintenance" Table 1-5 on page 19, Row 3, Column 2 to: "12 calendar years" The maximum maintenance interval for "Electromechanical lockout and/or tripping devices which are directly in a trip path from the protective relay to the interrupting device trip coil" should be consistent with the "Unmonitored control circuit" interval which is 12 calendar years. In order to test the lockout relays, it may be necessary to take a bus outage (due to lack of redundancy and associated stability issues with delayed clearing). Increasing the frequency of bus outages (with associated lines or transformers) will also increase the amount of time that the BES is in a less intact system configuration. Increasing the time the BES is in a less intact system configuration also increases the probability of a low frequency, high impact event occurring. Therefore, the Maximum Maintenance Interval should be 12 years for lockout relays. c)ATC's remaining concern for PRC-005-2 is with definition and timelines established in Table 1-5. ATC is recommending a negative ballot since, as written, the testing of "each" trip coil and the proposed maintenance interval for lockout testing will result in the increased amount of time that the BES is in a less intact system configuration. ATC hopes that the SDT will consider these changes.

Group

Florida Municipal Power Agency

Frank Gaffney

No

Yes

Yes

No

We like the new Table 3, but, have remaining concerns. The standard reaches further into the distribution system than we would like for UFLS and UVLS. We have two parts to this concern. First, it will be somewhat onerous to present all the evidence of distribution class protection system maintenance and testing at audits. And second, our biggest concern is in the testing required to "exercise" a lockout or tripping relay. This may require installation of test blocks to allow such exercising of the lockout or tripping relay without tripping the distribution circuit, and such a test could be difficult to perform without impacting customer continuity of service if the lockout/tripping relay for the UFLS is the same as the lockout/tripping relay for distribution fault protection. However, most of FMPA's members have microprocessor-based relays for distribution circuits with the UFLS / UVLS embedded within the microprocessor based relay where the path from the UFLS / UVLS relay to the lockout / tripping relay is internal to the micro-processor based relay, so, testing the UFLS/UVLS relay will at the same time test the internal lockout / switching relay. However, for older electro-mechanical UFLS schemes, this type of testing could be problematic.

The "Applicability" section is not consistent with the recent Y-W and Tri-State PRC-005 interpretation (Project 2009-17). The Applicability 4.2.1 states that the standard includes: "Protection Systems that are installed for the purpose of detecting faults on BES Elements (lines, buses, transformers, etc.)" whereas the Y-W and Tri-State interpretation basically says that "transmission Protection Systems" both detect AND trip BES Elements; Hence, the new standard alters the existing "and" statement in the Y-W and tri-State interpretation and eliminates the consideration of tripping BES Elements from

applicability. This will have the consequence of including Protection Systems on step-down transformers that "look backwards" into the BES system as applicable to the standard. For instance, a distribution network fed from multiple transmission interconnections will have protective relaying (directional overcurrent most likely) to look backwards into the transmission system to trip the step-down transformer to prevent back-feed from the distribution network). This step-down transformer protection would be included in the new standard because it's purpose to the detect faults on the BES (event though the purpose of the protection is actually to protect overloading of the distribution and for worker safety on the BES); whereas the Y-W and Tri-State interpretation excludes that protection from the existing PRC-005-1 standard.
Group
NERC Staff
Mallory Huggins
No
Yes
No
We agree in principle with the change; however, we have identified discrepancies among these tables with respect to the reference to UFLS and UVLS systems. The headings in Tables 1-1 through 1-4(b) and Table 1-5 refer to “Excluding distributed UFLS and UVLS”; Table 1-4(c) refers to “Excluding UFLS and non-distributed UVLS”; while Table 1-4(d) refers to “Excluding UFLS and distributed UVLS.” We believe the drafting team intended for consistency among these tables and that the intent is to exclude distributed UFLS and distributed UVLS schemes as opposed to distributed UFLS and all UVLS schemes. To make this clear we recommend changing the second line in the heading of each of these tables to “Excluding distributed UFLS and distributed UVLS.” Corresponding changes should be made in the “Component Attributes” sections of Tables 1-4(a) through 1-4(e) and to the title of Table 3.
No
We recommend changes to Supplementary Reference. It appears the 3 calendar month interval referenced in the second FAQ in section 7.1 on page 20, Example 1 on page 21, Example 2 on page 22, and on page 23 should be updated to 4 calendar months consistent with the changes to the standard for verification of station dc supply voltage and inspection of electrolyte level and unintentional grounds. We recommend modifying references to UFLS and UVLS to clarify the intervals for distributed systems applies to both UFLS and UVLS similar to the recommended change to the standard in our comment on question 4. See pp. 26, 30, 33, 86, and 87 of the supplementary reference.
Individual
Antonio Grayson
Southern Company Transmission
No
No
The measures associated with the requirement that includes this term is non-specific with regards to what an auditor will require as proof of the initiation of resolving the issue. It is suggested that one of these two courses be followed: either a) eliminate the requirement to initate resolution, or b) fully describe what evidence is expected for this part.
Yes
Yes
For UF and UV schemes, Table 3 does not specifically state to check the alarm(s) to a control center (for monitored components). There are some references to Table 2 (i.e. See Table 2), but does that mean that you have to verify the alarm(s)? I think Table 2 details need to be included specifically in

Table 3. Or make it very clear that this test is required for UF and UV schemes.
No
1. Page 16: ‘Add and Table 3’ in Figure and end of FAQ after figure 2. Page 20: change reference from 3 to 4 months. This applies throughout document.
Table 1-5: Need clarification on "continuity and energization or ability to operate". What does this mean?
Group
Pepco Holdings Inc & Affiliates
David Thorne
No
Yes
Yes
Yes
Yes
Requirement 3 and the Supplementary Reference Document indicate that an entity should be held to its internal PSMP (especially for a time based program) even if the plan is more stringent than the NERC standard. This would be a deterrent for initiative and for excellence and punish utilities for going above the standards and performing best practices. It also tends to drive the industry to lowest common denominator practices. R3 and the accompanying Supplementary Reference Document should be appropriately revised to reflect that entities would only be held auditably accountable for the minimum requirements as stated in the standard and associated documents.
Individual
Brian Evans-Mongeon
Utility Services, Inc
Yes
We would urge that the SAR be modified to include Validation of Protection System settings. Presently, the standard does not provide for the explicit validation of the settings and it is possible that such mis-settings could be the reason for a misoperation. If a validation of the settings was explicitly called for in the standard, then the misooperation would be less likely to occur for that reason.
Yes
While this helps, we are concerned that during the term of the Unresolved Maintenance Issue is being resolved, a question of compliance to the standard might be pending out. It should be clarified that during this term, compliance to the standard is being satisfied and not deemed to be non-compliant.
No
The standard should provide guidance what tasks need to be accomplished for compliance and not mandates on specifics like this. Registered Entities should be left to determine the appropriate intervals based upon their experience and good utility practices.
Yes
Thank you for the opportunity to address the new documentation and for your efforts.
Group
Western Area Power Administration
Brandy A. Dunn
No

Yes
Yes
Yes
No
See comments under question 6
Comment 1: Western Area Power Administration does not agree with penalizing utilities for implementing maintenance programs that exceed the requirements defined in the NERC Standard PRC-005-2 maintenance tables. Although the intent of the language in the Supplementary Reference and FAQ document may have been to allow evolving maintenance programs to include condition-based and performance based maintenance in their programs, penalizing utilities with more stringent programs will more likely provide a disincentive for program development. Utilities will discontinue any additional maintenance activities that could put them at risk for non-compliance. This will cause maintenance programs to stagnate and new maintenance ideas to improve system reliability to not be implemented. It is the opinion of the Western Area Power Administration that the following text should be removed from the Supplementary Reference and FAQ document and entities should be audited to the minimum requirement of the standard regardless of their individual programs. Recommendation: Remove the following text from the Supplementary Reference & FAQ document: 1. Page 26 - The bullet “If your PSMP (plan) requires more activities then you must perform and document to this higher standard.” 2. Page 27 – The bullet “If your PSMP (plan) requires activities more often than the Tables maximum then you must perform and document those activities to your more stringent standard.” 3. Page 27 – The paragraph “It has been noted here that an entity may have a PSMP that is more stringent than PRC-005-2. There may be any number of reasons that an entity chooses a more stringent plan than the minimums prescribed within PRC-005-2, most notable of which is an entity using performance based maintenance methodology. (Another reason for having a more stringent plan than is required could be a regional entity could have more stringent requirements.) Regardless of the rationale behind an entity’s more stringent plan, it is incumbent upon them to perform the activities, and perform them at the stated intervals, of the entity’s PSMP. A quality PSMP will help assure system reliability and adhering to any given PSMP should be the goal.” Revise R3 of PRC-005-2 and add statement to the Supplementary Reference & FAQ document. 1. R3: Each Transmission Owner, Generator Owner and Distribution Provider shall implement and follow its PSMP plan within the prescribed intervals of Tables 1, 2 and 3. and correct any unresolved maintenance issues. 2. FAQ: Any utility maintaining Protection System equipment that exceeds the requirements and tables because of historical testing data and/or failure documentation should not be held non-compliant or penalized for not meeting its PSMP, as long as they do not exceed the maximum allowable intervals or meet the minimum maintenance activities of the standard. Comment 2: R3 of PRC-005-2 states “Each Transmission Owner, Generator Owner, and Distribution Provider shall implement and follow its PSMP and initiate resolution of any unresolved maintenance issues.” The Western Area Power Administration would like more clarification on potential data request for requirement R3 of PRC-005-2. Because the requirement uses the term initiates resolution, the entity could make the assumption that providing just a list of maintenance request for unresolved maintenance issues will serve to prove compliance. Although it would seem implied that whatever method used to initiate resolution would lead to some type of corrective maintenance, the requirement does not make that absolutely clear. To ensure the maintenance practices are meeting the intent of the requirement, the requirement needs to clarify the expectations for completing corrective maintenance that was initiated to resolve maintenance issues. Recommendation: Add additional clarification to Supplementary Reference & FAQ document to further clarify expectation for this requirement.
Group
MRO's NERC Standards Review Forum
Carol Gerou
No

No

Requirement R3 includes the following: “and initiate resolution of any unresolved maintenance issues”. The addition of unresolved maintenance issues to the standard is not included in the SAR and has the potential to cause confusion and misinterpretation. It is suggested that this phrase be removed.

Yes

We agree 4 calendar months is better than 3 Calendar months. The 4 month activities should be removed from Tables 1-4(a,b,c,d). These requirements are blurring the distinction between a best practice and functionally verifying the component. IEEE already sets the industries best practices, if a reliability Standard includes best maintenance practices it is encroaching on IEEE’s ability to keep the industry informed and optimized. The Standard Drafting Team should restrain itself to only making requirements that functionally verify components and initiate corrective action wherever possible. We recommend that this time frame be a maximum of 6 Calendar Months which will allow entities to establish their own time frame based on the seasonal changes that occur where the batteries are located.

Yes

No

a. Page 9, “Is a Sudden Pressure Relay an auxiliary tripping relay? “ 1) During the webinar on Thursday, September 15th it was asked whether the trip path for a sudden pressure relay needed to be confirmed. Based on this question, we believe that the FAQ should be modified as follows: i. Is a Sudden Pressure Relay an auxiliary tripping relay? No. IEEE C37.2-2008 assigns the device number 94 to auxiliary tripping relays. Sudden pressure relays are assigned device number 63. Sudden pressure relays are excluded from the Standard because it does not utilize voltage and/or current measurements to determine anomalies. Since the sudden pressure relay is not included, it also follows that trip path testing for this relay type is also excluded. b. On page 26 of the Supplementary Reference document, it states, “If your PSMP (plan) requires more activities than you must perform and document to this higher standard.” This penalizes utilities from including best practices in their PSMP, and encourages utilities to implement the standard maintenance practice instead of a higher maintenance practice. Why would a utility accept the additional risk of a NERC penalty or sanction when they can stay in compliance by accepting the minimum requirements of the standard? By stating this, the PSMP will include only those required items at the minimum frequency to avoid a compliance violation. For the reliability of the BES, recommend the wording be changed to, “If your PSMP (plan) requires more activities than required by PRC-005-2, you will be held accountable only to the minimum requirements in the standard. NERC encourages utilities to implement best practices to improve the reliability of the BES, so utilities will not be penalized for exceeding the standards.” In FERC Order 693, section 278 FERC states: While we appreciate that many entities may perform at a higher level than that required by the Reliability Standards, and commend them for doing so, the Commission is focused on what is required under the Reliability Standards, we do not require that they exceed the Reliability Standards”. c. Page 78, last paragraph: If the same type of ohmic testing is done (impedance, conductance or resistance), may a different manufacturer’s test equipment be used for this testing? d. Page 79, second paragraph of “Why verify voltage?”: 1) “The verification of the dc supply voltage is simply an observation of battery voltage to prove that the charger has not been lost or is not malfunctioning.” i. Is it the intent of the PSMT SDT that this measurement is taken at the battery terminals, or will a reading taken from the battery charger panel meter meet this requirement? 2) “The maintenance activity of verifying the float voltage of the battery charger is not to prove that a charger is lost or producing high voltages on the station dc supply, but rather to prove that the charger is properly floating the battery within the proper voltage limits.” i. Is it the intent of the PSMT SDT that this measurement is taken at the battery terminals, or will a reading taken from the battery charger panel meter meet this requirement? e. Except as noted above, the changes to the “Supplementary Reference” document appear to be acceptable, but the following are suggested as changes to enhance clarity. 1) On page 9 of the Supplementary Reference and FAQ draft the following statement is included: “Relays that respond to non-electrical inputs or impulses (such as, but not limited to, vibration, pressure, seismic, thermal or gas accumulation) are not included.” On page 67, the third sentence of Section 15.3 states: “It includes [referring to control circuitry] the wiring from

every trip output to every trip coil." Later in that section the following is included: "…from a protective relay that are necessary for the correct operation of the protective functions." While this later statement may be interpreted to exclude circuitry associated with relays that do not respond to non-electrical inputs or impulses it would be better to make this more explicit. It would seem illogical to require testing of circuitry that is not needed for the protective functions covered by the standard. It is suggested that a sentence like the following be added to the first paragraph of Section 15.3: "Control circuitry associated with relays that respond to non-electrical inputs or impulses is not covered by this standard and need not be tested." 2) On page 31 of the Supplementary Reference it indicates that a procedure that includes intervals less than the standard could result in a noncompliance finding even if the maximum intervals in the standard are complied with. This is contrary to previous Commission rulings on what is mandatory and enforceable (i.e. only the standard itself Ref. Order 733 p105). This FAQ response should be changed to reflect those rulings.

a. Section 4.2.5.4 includes station service transformers for generator facilities. As currently written, the section includes all the protection systems for station service transformers for generators that are a part of the BES. It states, "Protection Systems for generator-connected station service transformers for generators that are part of the BES." Generating facilities may have transfer schemes on the auxiliary transformer to transfer equipment to a reserve transformer instead of tripping the unit. These protection systems should not be included in the Facilities for PRC-005-2, since the BES is not affected. Recommend changing Section 4.2.5.4 to read, "Protection Systems that trip the generator for generator-connected station service transformers for generators that are a part of the BES." b. Data Retention, Section 1.3 (concerning R2 and R3) requires an entity to retain the two most recent performances of each distinct maintenance activity. This is an unreasonable requirement and does not enhance reliability. Recommend the data retention be changed to require only the most recent (past) test record. An example exists where an entity recently registered and tested all their relays prior to registering. They have one set of documentation and not two. PRC-005-2 allows testing intervals of up to 12 calendar years. If we are required to have the two most recent tests, we could conceivably have to retain a relay test record for 24 years. Recommend retention to be the most current record or all records since the last audit. c. Table 1-5 requires a maintenance activity to, "Verify that each trip coil is able to operate the circuit breaker, interrupting device, or mitigating device." Recommend this be changed to, "Verify that each a trip coil is able to operate the circuit breaker, interrupting device, or mitigating device." Or alternately, change the wording to, "Electrically operate each interrupting device every 6 years." While requiring each trip coil to operate the breaker sounds good in theory, practically it creates issues in the field and may create more problems than it solves. The trip coils are located in the panel at the breaker and aren't configured to test independently. Isolating one trip coil from the other may include "lifting a wire" that may not get landed properly when the test is complete. Then, how do you prove for a compliance audit that both trip coils were independently tested to trip the breaker? Using an actual event only tests one coil and we may not know which coil tripped the device. To be compliant, it isn't practical to be able to track a real-time fault clearing operation as suggested on page 67 of the Supplementary Reference document. First, we don't know which trip coil operated, then we have a "one off" device in the substation that must be tracked separately with a different testing cycle from the other devices in the substation. The standard should focus on ensuring the control circuitry is intact and trips the breaker without injecting additional, unneeded risk to the BES. d. General comment under Table 1-5: We do extensive testing of the control circuit during commissioning and after a modification to the circuit. Testing of the control circuitry on a periodic basis is not needed. The wear and tear on the equipment from functional testing and the potential risk of the testing itself may create more issues than the benefits received from doing the tests. The functional test injects significant opportunities for human performance errors during the test (technician trips the wrong device, differential relay opens all protective devices for a bus instead of a breaker, technician bumps another relay, screw driver falls into another device, etc.) and latent errors after the test (i.e., if a wire was lifted during the test, was it landed back in proper location, was the relay tripping function activated after the test was completed or was the relay left in test mode, etc.). Request the drafting team provide a basis for requiring the functional test. Are there documented instances where the control circuitry caused a significant event on the BES? Many utilities, monitor circuit breakers for operations. If a breaker hasn't operated for a defined period of time, we set up a maintenance activity to operate the breaker (possibly to include a timing test to ensure the breaker clears in the proper amount of cycles) – this ensures the operating linkages aren't bound and the breaker will operate. Misoperations are already monitored and reported through PRC-004. Does recent misoperation data or TADS data indicate that control circuitry/trip coils are a

problem within the protection and control system? The current version of PRC-005 doesn't require functional tests. What is the basis for requiring additional compliance documentation (additional functional testing)? A possible alternative: only perform testing following modifications or major maintenance (like breaker change outs or panel modifications). e. Change the text of "Standard PRC-005-2 – Protection System Maintenance" Table 1-5 on page 19, Row 3, Column 2 to: "12 calendar years". 1) The maximum maintenance interval for "Electromechanical lockout and/or tripping devices which are directly in a trip path from the protective relay to the interrupting device trip coil" should be consistent with the "Unmonitored control circuit" interval which is 12 calendar years. 2) In order to test the lockout relays, it may be necessary to take a bus outage (due to lack of redundancy and associated stability issues with delayed clearing). Increasing the frequency of bus outages (with associated lines or transformers) will also increase the amount of time that the BES is in a less intact system configuration. Increasing the time the BES is in a less intact system configuration also increases the probability of a low frequency, high impact event occurring. Therefore, the Maximum Maintenance Interval should be 12 years for lockout relays. f. In the background section of the implementation plan in item two it states "..it is unrealistic for those entities to be immediately in compliance with the new intervals." A recent compliance application notice (CAN-0012) indicated that auditors are requiring entities to include proof of compliance to maintenance intervals by providing the most recent and prior maintenance dates. Please provide clarity on CAN-0012 is applicable to PRC-005-2? g. The purpose statement of the standard seems to be inconsistent with the applicability section. To correct this it is suggested that the words "affecting the reliability" be removed from the purpose statement. h. For consistency with the changes from 3 months to 4 months in the tables of the standard it is suggested that the second item in Table 1-4(b) be changed from 6 calendar months to 7 calendar months. i. In the tables for dc Supply the term "unit-to-unit" is used along with "intercell" when referring to measurement of connection resistance. From the applicable IEEE standards (e.g. IEEE 450) the standard terminology seems to be "intercell". It is recommended that the "unit-to-unit" term be removed to avoid confusion regarding what is to be verified. j. The NSRF would like to extend our thanks to the drafting team. The 96 page Supplementary Reference document allows us to discuss these issues before the standard is approved, instead of as a potential violation later. Excellent job!
Group
PacifiCorp
Sandra Shaffer
No
Yes
Yes
Yes
Yes
1. The data retention requirement for producing evidence that the entity performed maintenance for the 2 most recent maintenance intervals is excessive. As an example, if a registered entity's maintenance/test interval is 12 years, such entity may be required to keep records for up to 35 years. PacifiCorp recommends a revision to the data retention requirement to provide for either a maximum retention period of 10 years or, in cases in which the interval exceeds 10 years, the most recent maintenance/test cycle only. 2. The requirement to identify all PTs is very onerous and not needed to verify maintenance compliance and therefore serves a limited reliability benefit. PacifiCorp believes that, as long as a registered entity can demonstrate that it can verify that all CTs/PTs providing input into a Protection System have been tested and maintained according to its established procedures, then a separate and independent requirement to maintain a list of these devices is not necessary. As an example, if an entity performed their protection system maintenance on a "scheme" basis, and as part of that maintenance documentation identified all CT's and PT's providing input into the scheme and verified their accuracy, then having a "master list" would provide no benefit. A list of all CT's

associated with one device such as a circuit breaker would have little value in this case as these CT's may provide input into multiple relay schemes and would not be maintained on an individual circuit breaker basis.
Group
ACES Power Collaborators
Jason Marshall
No
Yes
Yes
Yes
No
There are some changes that are needed to the document. On Page 19, the second question refers to R1.4. There is no R1.4 in the standard. We assume that document is intended to refer to part 1.4 under R1. This needs to be clarified and corrected. The reference document creates an improper incentive to eliminate best practices and utilize the maximum time intervals established in the standard. The document states that an entity will be subject to compliance violations if it has a maintenance and testing program with time intervals that are more stringent than the maximum time intervals in the standard and it does not meet its more stringent intervals. This would hold true even if the registered entity meets the maximum intervals established in the standard. To reduce compliance risk, registered entities will be incented to increase its time intervals to the maximum allowed by the standard. This is contrary to supporting reliability. Penalizing entities for failing to meet their more stringent plan requirements is also contrary to guidance provided by the Commission. Doug Curry, General Counsel of Lincoln Electric System, spoke to the Commission at the November 18, 2010 FERC technical conference on reliability monitoring, enforcement and compliance about his company's experience with the vegetation management standard. They exceeded the requirements for annual inspections by including six aerial patrols each year but were found in violation of the standard and paid penalties when they did not complete but one aerial patrol in the first five months of the year. The auditors concluded that the company's ground patrol fully satisfied the minimum requirements of the standard. In the end, LES removed the aerial inspections from the vegetation management plan. The Commissioners acknowledged that this was contrary to their goal of an adequate level of reliability and agreed that an entity should not be penalized for failing to meet their more stringent requirements when they meet the standard requirements. On Page 34, the FAQ about commissioning does not appear to be consistent with CAN-0011. While we believe the reference document is more correct, the drafting team should compare the advice given in the reference document to that in the CAN to ensure that it is not conflicting. Given that NERC is in the process of revising all of the CANs, the best approach may simply be to add a statement referencing the CAN-0011 for further information. Comments about "gaming the PBM system" regarding restoring segment performance should be removed from the reference document. Comments like these indicate intent by a registered entity to manipulate the compliance process. Only after a thorough investigation can such intent be determined. Thus, there shouldn't be a presumption that registered entities will attempt this. Better comments would be to focus on the consistency that the three year period provides in determining segment performance. In section 12.1 on page 58, the reference document discusses out of service equipment. NERC recently issued a lesson learned on removing unused relaying equipment on August 10, 2011. The drafting team may wish to reference that lesson learned in the reference document.
Individual
Michael Moltane
ITC Holdings
No

Yes
Yes
Yes
Yes
ITC Holdings continues to object to the requirement to exercise auxiliary relays on a 6 year interval. We repeat our previous comments as follows: “It has been our experience that trip failures are rare and that our present 10 year control, trip tests, and other related testing are sufficient in verifying the integrity of the scheme. Section 8.3 of the Supplementary Reference notes statistical surveys were done to determine the maintenance intervals. Were auxiliary relays included in these surveys in a such a way to verify that they indeed require a 6 year maintenance interval? We recommend they be considered part of the control circuitry, with a 12 year test cycle.” Previous responses from the SDT were: “The SDT believes that the appropriate interval for electromechanical devices such as aux or lockout relays should remain at 6 years, as these devices contain “moving parts” which must be periodically exercised to remain reliable” ITC requests that the statistical basis for the 6 year interval be published. If it is not clear that lockout relays and other auxiliary relays must be exercised on a 6 year interval, then the requirement should be changed to 12 years.
Individual
Michelle D'Antuono
Igleside Cogeneration LP
No
Yes
The original term inferred that the problem detected was correctible through follow-up maintenance – which is not always the case. The term “Unresolved Maintenance Issue” is more appropriate.
Yes
Ingleside Cogeneration LP agrees that the intervals on the activities in question should be extended to 4 calendar months. However on Page 20 of the Supplementary Reference document, the calculation of the next due date using units of “calendar months” is inconsistent with the calculation using a “calendar year”. In the case of “calendar years”, an activity must take place somewhere between Jan 1 and Dec 31. For “four calendar months”, a follow-up activity must be performed within four months from the completion of the prior one. We believe that “four calendar months” should be calculated in the same manner as a “calendar year”. This means that an activity should take place at least once between January 1 and April 30; and repeated once during May 1 through August 31, and again between September 1 and December 31. The pattern would continue in ongoing years. Not only is this method consistent with the “calendar year” derivation, it allows the most flexibility in scheduling – especially if an unexpected event causes a delay. The vast majority of the maintenance activities will still take place at four months plus or minus a week or two; with an occasional outlier that adds minimal risk to reliability.
Yes
We believe that distributed UFLS and UVLS relay systems have a very different operating purpose than those that are not distributed. It is appropriate to separate the maintenance activities and intervals for these relay systems.
Yes
Ingleside Cogeneration LP found the Supplementary Reference document to be helpful, thorough, and technically accurate. The only suggestion we have is that demonstrated adherence to the Reference should be admissible of evidence of compliance at an audit or spot check. Today, all References have no official regulatory standing – which seems to defeat the purpose of developing them to begin with.
Ingleside Cogeneration, LP, continues to believe that the six year requirement to verify channel

performance on associated communications equipment will prove to be more detrimental than beneficial on older relays. Clearly newer technology relays which provide read-outs of signal level or data-error rates will easily verified, but the tools which measure power levels and error rates on non-monitored communication links are far more intrusive. After the technician uncouples and re-attaches a fiber optic connection, the communications channel may be left in worse shape after verification than it was prior to the start of the test.
Individual
Armin Klusman
CenterPoint Energy
No
For the “Control circuitry between the UFLS or UVLS relays and electromechanical lockout and/or tripping auxiliary devices”, the Table 3 requirement is to “Verify the path from the relay to the lockout and/or tripping auxiliary relay (including essential supervisory logic)” every 12 calendar years. CenterPoint Energy recommends this requirement be revised to “No periodic maintenance specified”. CenterPoint Energy believes that wire checking a panel is a commissioning task, not a preventive maintenance task. CenterPoint Energy performs such checks on new stations and whenever expansion or modification of existing stations dictates such testing. In addition, CenterPoint Energy recommends the requirement in Table 3 to “Verify that current and/or voltage signal values are provided to the protective relays” every 12 years be revised to “No periodic maintenance specified”. Likewise, we recommend the requirement in Table 3 to “Verify Protection System dc supply voltage” every 12 years be revised to “No periodic maintenance specified”. Preventive maintenance tasks such as the three above are unnecessary for distributed UFLS and UVLS system components. The overriding performance, or “risk-based”, NERC Reliability Standards for UFLS are PRC-006 and PRC-007 where an entity is required to shed their obligated firm load amount.
No
CenterPoint Energy appreciates that there is now only one document, instead of the two originally proposed. However, we question the name of the document which shows “Supplemental Reference and FAQ”. The use of “Supplemental Reference” could infer it contains requirements not found in the PRC-005-2 standard. Also, we suggest that NERC standardize on the names of documents associated with standards and other NERC initiatives. CenterPoint Energy recommends the name of the document be “Technical Reference”.
For the “Unmonitored control circuitry associated with protective functions”, the Table 1-5 requirement is to “Verify all paths of the trip circuits through the trip coil(s) of the circuit breakers or other interrupting devices” every 12 calendar years. CenterPoint Energy recommends this requirement be revised to “No periodic maintenance specified”. CenterPoint Energy believes that verifying all tripping paths is a commissioning task, not a preventive maintenance task. CenterPoint Energy performs such checks on new stations and whenever expansion or modification of existing stations dictates such testing. This type of testing can negatively impact BES system reliability with the outages that are required and by exposing the electric system to incorrect tripping. Likewise, CenterPoint Energy recommends the requirement in Table 1-5 to “Verify all paths of the control circuits essential for proper operation of the SPS” every 12 years be revised to “No periodic maintenance specified”.
Individual
Darryl Curtis
Oncor Electric Delivery Company LLC
No
Yes
Yes

Yes
Yes
Oncor would like to see the “Supplementary Reference & FAQ” expanded to provide examples of what documentation would satisfy that the entity is compliant with initiating “resolution of any unresolved maintenance issues.” Also it would be helpful to all entities if the Drafting Team would expand on what, if any, tracking of the resolution of an unresolved maintenance issue is required. Oncor believes that keeping track of the initiation of “resolution of any unresolved maintenance issues” is necessary but that the standard does not currently address retention requirements related to this compliance obligation.
PRC-005-2 is a vast improvement over the vagueness of the existing standard (PRC-005-1), that the new standard makes compliance much easier than the present standard. The new standard recognizes the advances in relay technology and reliability, particularly the benefits of microprocessor based relays. The standard also provides greater flexibility on its implementation while recognizing the benefits of a performance based methodology, particularly as it relates to battery testing. The revised standard eliminates the requirement for a “summary of maintenance and testing procedures” which was vague and provided no real value to the registered entities. Operational and administrative efficiencies can be realized by consolidating the relay testing and maintenance requirements into one standard (PRC-005-1, PRC-008-0, PRC-011-0, PRC-017-0)
Individual
Tracy Richardson
Springfield Utility Board
No
Yes
This change has no impact on how Springfield Utility Board currently operates.
Yes
This change has no impact on how Springfield Utility Board currently operates.
Yes
Although numerous tables can become overwhelming to navigate, it is far less ambiguous if specific systems are spelled out in separate and distinct tables.
Yes
Because Springfield Utility Board's (SUB) current maintenance and testing program is time-based, the revised "Supplementary Reference" document does not impact SUB operations. SUB agrees with the document changes because the changes result in alernatives for entitities, rather than being prescriptive.
Individual
Andrew Gallo
City of Austin dba Austin Energy
No
Yes
Yes
Yes
Yes
If a Registered Entity has a PSMP that is more stringent than the intervals in PRC-005-2, the

Registered Entity should not be considered out of compliance if it fails to meet its internal interval but remains within the interval set forth in PRC-005-2.
Individual
Gerry Schmitt
BGE
No
No comment.
No
No comment about the change itself, but the terms were not consistently applied in the Supplemental Reference Manual (see last comment).
Yes
BGE appreciates the SDT demonstrating flexibility by extending these maintenance intervals.
No
Although BGE does not disagree with moving the distributed UFLS/UVLS maintenance activities and intervals into the new Table-3, BGE requests further clarification from the SDT on how to correctly interpret the headings and content of this table.
No
While we do not disagree with the revisions to the Supplemental Reference, there remains an important item to correct. The supplementary reference on page 31, under the question beginning "Our maintenance plan calls…" states that an entity is "out of compliance" if maintenance occurs at a time longer than that specified in the entity's plan, even if that maintenance occurred at less than the maximum interval in PRC-005-2. But then on page 35-36, under the question, "How do I achieve a grace period without being out of compliance?" the response provides a presumably compliant example of scheduling maintenance at four year intervals in order to manage scheduling complexities and assure completion in less than the maximum time of six calendar years. This advice conflicts with the previous guidance. The FAQ /supplementary reference should be revised so that it does not imply that an entity is out-of-compliance by performing maintenance more frequently than required than the bright-line maxima in the tables. Entities may opt to test more frequently than dictated in the tables for a variety of reasons that may or may not be related to reliable protection system performance – compliance management, scheduling, operational preference, etc.
When the term "Maintenance Correctable Issue" was revised to "Unresolved Maintenance Issue", it appears that the PRC-005-2 Protection System Maintenance / Supplementary Reference and FAQ document was not properly updated to reflect this change. There are inconsistencies throughout the entire document were the old term is still showing up instead of the new term, and vice versa.
Individual
Amir Hammad
Constellation Power Generation
Yes
Although Constellation Power Generation agrees with some of the refinements prescribed in the SAR, there are a few items of concern. Constellation Power Generation agrees that "the requirements should reflect the inherent differences between various protection system technologies," however the requirements should not mandate different testing methods and testing intervals based on that technology. The Registered Entity should be given the latitude to address different technologies through its PSMP, and the requirements should reflect that.
No
As R3 is currently written, Constellation Power Generation is concerned that this requirement may decrease the reliability of the BES under certain circumstances. The severity of the "deficiency" found will dictate the method and timing of a "follow up correction action". For a generator, the corrective action may not be "initiated" until the next planned outage, which may be a few years. However, R3 suggests that to comply, a generation site may have to extend an outage or take a forced and unplanned outage, to perform the corrective action. This would decrease the available resources in a given BA's footprint and potentially decrease the reliability of the BES.

No
Moving the UFLS and UVLS systems from Tables 1-1 through 1-5 into a separate Table 3 is a useful improvement in illustrating the requirements. However, our objection is not really with the format, it is will the content of the Tables. From a generation perspective, the maintenance intervals and activities described in all of the Tables are too prescriptive and we are concerned that they may conflict with the existing PSMPs built by Registered Entities based on years of operational experience with the testing methods and testing frequencies that work best for the specific asset. In the worst case, the specifics dictated in the Tables may move Entities away from more stringent PSMPs that are currently in practice. For this reason, Constellation suggests that the drafting team revisit the concept of the Tables to better balance to convey useful guidance without creating a compliance requirement that may be contrary to improved reliability. The Registered Entity should be given more flexibility to dictate how a protection system component should be tested, and at what frequency. Lastly, the technical manpower and compliance documentation demands to implement a performance based protection system maintenance program are so onerous that it is highly unlikely that any small generation entity would use it.
No
While we do not disagree with the revisions to the Supplemental Reference, there remains an important item to correct. The supplementary reference on page 31, under the question beginning "Our maintenance plan calls…" states that an entity is "out of compliance" if maintenance occurs at a time longer than that specified in the entity's plan, even if that maintenance occurred at less than the maximum interval in PRC-005-2. But then on page 35-36, under the question, "How do I achieve a grace period without being out of compliance?" the response provides a presumably compliant example of scheduling maintenance at four year intervals in order to manage scheduling complexities and assure completion in less than the maximum time of six calendar years. This advice conflicts with the previous guidance. The FAQ /supplementary reference should be revised so that it does not imply that an entity is out-of-compliance by performing maintenance more frequently than required than the bright-line maxima in the tables. Entities may opt to test more frequently than dictated in the tables for a variety of reasons that may or may not be related to reliable protection system performance – compliance management, scheduling, operational preference, etc. The discussion of "grace period" may be best clarified as a term to include in an entity's PSMP that grants entities the flexibility to maintain compliance if testing occurs between an entity's plan interval and the bright-line interval.
Individual
Brenda Powell
Constellation Energy Commodities Group
Yes
Although Constellation Energy Commodities Group agrees with some of the refinements prescribed in the SAR, there are a few items of concern. Constellation Energy Commodities Group agrees that "the requirements should reflect the inherent differences between various protection system technologies," however the requirements should not mandate different testing methods and testing intervals based on that technology. The Registered Entity should be given the latitude to address different technologies through its PSMP, and the requirements should reflect that.
No
As R3 is currently written, Constellation Energy Commodities Group is concerned that this requirement may decrease the reliability of the BES under certain circumstances. The severity of the "deficiency" found will dictate the method and timing of a "follow up correction action". For a generator, the corrective action may not be "initiated" until the next planned outage, which may be a few years. However, R3 suggests that to comply, a generation site may have to extend an outage or take a forced and unplanned outage, to perform the corrective action. This would decrease the available resources in a given BA's footprint and potentially decrease the reliability of the BES.
No
Moving the UFLS and UVLS systems from Tables 1-1 through 1-5 into a separate Table 3 is a useful improvement in illustrating the requirements. However, our objection is not really with the format, it

is will the content of the Tables. From a generation perspective, the maintenance intervals and activities described in all of the Tables are too prescriptive and we are concerned that they may conflict with the existing PSMPs built by Registered Entities based on years of operational experience with the testing methods and testing frequencies that work best for the specific asset. In the worst case, the specifics dictated in the Tables may move Entities away from more stringent PSMPs that are currently in practice. For this reason, Constellation suggests that the drafting team revisit the concept of the Tables to better balance to convey useful guidance without creating a compliance requirement that may be contrary to improved reliability. The Registered Entity should be given more flexibility to dictate how a protection system component should be tested, and at what frequency. Lastly, the technical manpower and compliance documentation demands to implement a performance based protection system maintenance program are so onerous that it is highly unlikely that any small generation entity would use it.
No
While we do not disagree with the revisions to the Supplemental Reference, there remains an important item to correct. The supplementary reference on page 31, under the question beginning "Our maintenance plan calls…" states that an entity is "out of compliance" if maintenance occurs at a time longer than that specified in the entity's plan, even if that maintenance occurred at less than the maximum interval in PRC-005-2. But then on page 35-36, under the question, "How do I achieve a grace period without being out of compliance?" the response provides a presumably compliant example of scheduling maintenance at four year intervals in order to manage scheduling complexities and assure completion in less than the maximum time of six calendar years. This advice conflicts with the previous guidance. The FAQ /supplementary reference should be revised so that it does not imply that an entity is out-of-compliance by performing maintenance more frequently than required than the bright-line maxima in the tables. Entities may opt to test more frequently than dictated in the tables for a variety of reasons that may or may not be related to reliable protection system performance – compliance management, scheduling, operational preference, etc. The discussion of "grace period" may be best clarified as a term to include in an entity's PSMP that grants entities the flexibility to maintain compliance if testing occurs between an entity's plan interval and the bright-line interval.

Consideration of Comments

Protection System Maintenance and Testing – Project 2007-17

The Protection System Maintenance and Testing Drafting Team would like to thank all commenters who submitted comments on the first draft of the PRC-005-2 standard for Protection System Maintenance and Testing (Project 2007-17). This standard and its associated documents were posted for a 45-day public comment period from August 15, 2011 through September 29, 2011. Stakeholders were asked to provide feedback on the standard and associated documents through a special electronic comment form. There were 48 sets of comments, including comments from approximately 147 different people and approximately 98 companies representing 9 of the 10 Industry Segments as shown in the table on the following pages.

All comments submitted may be reviewed in their original format on the standard's project page:

http://www.nerc.com/filez/standards/Protection_System_Maintenance_Project_2007-17.html

If you feel that your comment has been overlooked, please let us know immediately. Our goal is to give every comment serious consideration in this process! If you feel there has been an error or omission, you can contact the Vice President and Director of Standards and Training, Herb Schrayshuen, at 404-446-2560 or at herb.schrayshuen@nerc.net. In addition, there is a NERC Reliability Standards Appeals Process.[1]

Summary Consideration of all Comments Received:

SAR:

The SDT made several changes to the SAR. The proposed title of the standard was changed to 'Protection System Maintenance'; Reliability Principle item #4 was removed as it does not apply to the standard; and the 'Transmission and Generation' descriptor of Protection Systems was removed from the Detailed Description area of the SAR.

Applicability:

The SDT revised Applicability 4.2.5.4 to indicate that, for generator-connected station service transformers, only the Protection Systems that trip the generator, either directly or via a lockout relay, are included in the standard.

Requirements:

Requirement R1 part 1.3 has been removed.

[1] The appeals process is in the Standard Processes Manual: http://www.nerc.com/files/Appendix_3A_Standard_Processes_Manual_20110825.pdf.

The SDT split Requirement R3 into three separate requirements for better clarity.

Requirement R3 has been revised so that, for time-based programs, entities must comply with the standard's tables rather than their PSMP. Requirement R3 now reads:

> **R3.** Each Transmission Owner, Generator Owner, and Distribution Provider that utilizes time-based maintenance program(s) shall maintain its Protection System components that are included within the time-based maintenance program in accordance with the minimum maintenance activities and maximum maintenance intervals prescribed within Tables 1-1 through 1-5, Table 2, and Table 3.

Requirement R4 has been added to address performance-based maintenance. The new Requirement R4 is as follows:

> **R4.** Each Transmission Owner, Generator Owner, and Distribution Provider that utilizes performance-based maintenance program(s) in accordance with Requirement R2 shall implement and follow its PSMP for its Protection System components that are included within the performance-based program.

Requirement R5 has been added to address Unresolved Maintenance Issues. The definition of the term 'Unresolved Maintenance Issues' has been enhanced for additional clarity, and now reads:

> ***Unresolved Maintenance Issue*** *- A deficiency identified during a maintenance activity that causes the component to not meet the intended performance and requires follow-up corrective action.*

The new Requirement R5 is as follows:

> **R5**. Each Transmission Owner, Generator Owner, and Distribution Provider shall demonstrate efforts to correct identified Unresolved Maintenance Issues.

Measures

The SDT revised and drafted new measures to comport with the requirements.

Tables

Most commenters seemed to agree in general that the restructured Tables added clarity and some commenters offered suggestions for further improvement. Minor clarifying changes were made to the Tables themselves, and additional discussion was added to the "Supplementary Reference and FAQ" document to address various comments.

In Table 1-5 (Component Type - Control Circuitry Associated With Protective Functions), the SDT removed the auxiliary relays from the 6 year periodic maintenance associated with electromechanical lockout devices, and included them in the 12 year periodic maintenance associated with the unmonitored control circuitry associated with protective functions.

Table 1-4(f) was modified to more accurately represent the monitoring attributes and related activities for monitored Vented Lead-Acid and Valve-Regulated Lead-Acid batteries.

Implementation Plan

Minor clarifying changes were made to the Implementation Plan.

VLSs:

Changes were made to the make the VSLs conform to the new and changed requirements.

Supplementary Reference Document

Changes were made to the "Supplementary Reference and FAQ" document, corresponding to all changes to the standard.

Unresolved Minority Views:

- A few commenters continued to object to the establishment of maximum allowable intervals for the maintenance of various Protection System component types. The SDT continued to respond that FERC Order 693 and the approved SAR direct the SDT to develop a standard with maximum allowable intervals and minimum maintenance activities. The SDT believes that the intervals established within the Tables are appropriate as continent-wide maximum allowable intervals.

- Several commenters were concerned that an entity has to be "perfect" in order to be compliant; the SDT responded that NERC Standards currently allow no provision for any degree of non-performance relative to the requirements.

- Several commenters continued to insist that "grace periods" should be allowed. The SDT continued to respond that grace periods would not be measurable.

- Several commenters continued to question the propriety of including distribution system Protection Systems, almost all related to UFLS/UVLS. The SDT obtained a position from NERC legal staff, and cited this position in responding that these devices are indeed within NERC's authority because they are installed for the reliability of the BES.

- A few commenters questioned the inclusion of the direct current (dc) control circuitry for sudden pressure relays even though the relays themselves are excluded from the definition of "Protection System"; the SDT reiterated its position that this dc control circuitry is included because the dc control circuitry is associated with protective functions.

- A few commenters objected to the language in the Data Retention section regarding the retention of the maintenance records for two full intervals. The SDT explained that this expectation is consistent with the Compliance Monitoring and Enforcement Program.

Index to Questions, Comments, and Responses

1. Do you have any comments regarding the existing SAR for this project? 11
2. In response to comments, the term "Maintenance Correctable Issue" was revised to "Unresolved Maintenance Issue". Do you agree with this change? If you do not agree, please provide specific suggestions for improvement.....19
3. In response to comments, the SDT revised the previous "3 calendar months" interval to "4 calendar months" for communications systems and station dc supply. Do you agree with this change? If you do not agree, please provide specific suggestions for improvement. 29
4. The SDT extracted the maintenance activities and intervals for distributed UFLS and UVLS systems from Table 1-1 through 1-5 and placed them into a new Table 3 to more clearly illustrate the requirements related to these systems. Do you agree with this change? If you do not agree, please provide specific suggestions for improvement.....39
5. The SDT has revised the "Supplementary Reference and FAQ" document which is supplied to provide supporting discussion for the Requirements within the standard. Do you agree with the changes? If not, please provide specific suggestions for change.....55
6. If you have any other comments on this Standard that you have not already provided in response to the prior questions, please provide them in the comment section. 79

The Industry Segments are:

1 — Transmission Owners
2 — RTOs, ISOs
3 — Load-serving Entities
4 — Transmission-dependent Utilities
5 — Electric Generators
6 — Electricity Brokers, Aggregators, and Marketers
7 — Large Electricity End Users
8 — Small Electricity End Users
9 — Federal, State, Provincial Regulatory or other Government Entities
10 — Regional Reliability Organizations, Regional Entities

Group/Individual		Commenter	Organization	Registered Ballot Body Segment									
				1	2	3	4	5	6	7	8	9	10
1.	Group	Guy Zito	Northeast Power Coordinating Council										X

	Additional Member	Additional Organization	Region	Segment Selection
1.	Alan Adamson	New York State Reliability Council, LLC	NPCC	10
2.	Gregory Campoli	New York Independent System Operator	NPCC	2
3.	Kurtis Chong	Independent Electricity System Operator	NPCC	2
4.	Sylvain Clermont	Hydro-Quebec TransEnergie	NPCC	1
5.	Michael Schiavone	National Grid	NPCC	1
6.	Gerry Dunbar	Northeast Power Coordinating Council	NPCC	10
7.	Brian Evans-Mongeon	Utility Services	NPCC	8
8.	Mike Garton	Dominion Resources Services, Inc.	NPCC	5
9.	Kathleen Goodman	ISO - New England	NPCC	2
10.	Chantel Haswell	FPL Group, Inc.	NPCC	5

Group/Individual	Commenter	Organization	Registered Ballot Body Segment									
			1	2	3	4	5	6	7	8	9	10
11. David Kiguel	Hydro One Networks Inc.	NPCC 1										
12. Michael Lombardi	Northeast Utilities	NPCC 1										
13. Randy MacDonald	New Brunswick Power Transmission	NPCC 9										
14. Bruce Metruck	New York Power Authority	NPCC 6										
15. Lee Pedowicz	Northeast Power Coordinating Council	NPCC 10										
16. Robert Pellegrini	The United Illuminating Company	NPCC 1										
17. Si Truc Phan	Hydro-Quebec TransEnergie	NPCC 1										
18. David Ramkalawan	Ontario Power Generation, Inc.	NPCC 5										
19. Saurabh Saksena	National Grid	NPCC 1										
20. Wayne Sipperly	New York Power Authority	NPCC 5										
21. Donald Weaver	New Brunswick System Operator	NPCC 2										
22. Ben Wu	Orange and Rockland Utilities	NPCC 1										
2. Group	Dave Davidson	Tennessee Valley Authority	X				X					

	Additional Member	Additional Organization	Region	Segment Selection
1.	Rusty Harison	TOM Support	SERC	1
2.	Pat Caldwell	TOM Support	SERC	1
3.	Paul Barnett	Tom Support	SERC	1
4.	David Thompson	TVA Compliance	SERC	5
5.	Jerry Finley	Power Control Systems	SERC	1
6.	Frank Cuzzort	TVA Generation - Nuclear	SERC	5
7.	Robert Brown	TVA Generation - Nuclear	SERC	5
8.	Roberts Mares	TVA Generation - Fossil	SERC	5
9.	Annette Dudley	TVA Generation - Hydro	SERC	5

3. Group	Ron Sporseen	PNGC Comment Group	X		X	X				X		

	Additional Member	Additional Organization	Region	Segment Selection
1.	Bud Tracy	Blachly-Lane Electric Cooperative	WECC	3
2.	Dave Markham	Central Electric Cooperative	WECC	3
3.	Dave Hagen	Clearwater Power	WECC	3
4.	Roman Gillen	Consumer's Power	WECC	1, 3
5.	Roger Meader	Coos-Curry Electric Cooperative	WECC	3
6.	Dave Sabala	Douglas Electric Cooperative	WECC	3

Group/Individual	Commenter	Organization	Registered Ballot Body Segment									
			1	2	3	4	5	6	7	8	9	10
7. Bryan Case	Fall River Electric Cooperative	WECC 3										
8. Rick Crinklaw	Lane Electric Cooperative	WECC 3										
9. Michael Henry	Lincoln Electric Cooperative	WECC 3										
10. Richard Reynolds	Lost River	WECC 3										
11. Jon Shelby	Northern Lights	WECC 3										
12. Ray Ellis	Okanogan Electric Cooperative	WECC 3										
13. Aleka Scott	PNGC Power	WECC 4										
14. Heber Carpenter	Raft River Electric Cooperative	WECC 3										
15. Ken Dizes	Salmon River Electric Cooperative	WECC 1, 3										
16. Steve Eldrige	Umatilla Electric Cooperative	WECC 3, 1										
17. Marc Farmer	West Oregon Electric Cooperative	WECC 3										
18. Margaret Ryan	PNGC Power	WECC 8										
19. Stuart Sloan	Consumer's Power	WECC 1										
4. Group	Chris Higgins	Bonneville Power Administration	X		X		X	X				
Additional Member	**Additional Organization**	**Region** **Segment Selection**										
1. Dean Bender	SPC Technical Svcs	WECC 1										
2. John Kerr	Technical Operations	WECC 1										
3. Lorissa Jones	Transmission Internal Ops	WECC 1										
4. Greg Vassallo	Customer Service Engineering	WECC 1										
5. Mason Bibles	Sub Maint and HV Engineering	WECC 1										
6. Deanna Phillips	FERC Compliance	WECC 1, 3, 5										
5. Group	Mike Garton	Dominion	X		X		X	X				
Additional Member	**Additional Organization**	**Region** **Segment Selection**										
1. Michael Crowley	Virginia Electric and Power Company	SERC 1, 3										
2. Michael Gildea	Dominion Resources Services, Inc.	MRO 5										
3. Louis Slade	Dominion Resources Services, Inc.	RFC 5										
6. Group	Sam Ciccone	FirstEnergy	X		X	X	X	X				
Additional Member	**Additional Organization**	**Region** **Segment Selection**										
1. Jim Kinney	FE	RFC 1										
2. Craig Boyle	FE	RFC 1										
3. Frank Hartley	FE	RFC 1										

Group/Individual		Commenter	Organization	Registered Ballot Body Segment									
				1	2	3	4	5	6	7	8	9	10
4. Bill Duge		FE	RFC 5										
5. Doug Hohlbaugh		FE	RFC 1, 3, 4, 5, 6										
7.	Group	Robert Rhodes	Southwest Power Pool Standards Review Group		X								

Additional Member	Additional Organization	Region	Segment Selection
1. John Allen	City Utilities of Springfield, Missouri	SPP	1, 4
2. Forrest Brock	Western Farmers Electric Cooperative	SPP	1, 3, 5
3. Anthony Cassmeyer	Western Farmers Electric Cooperative	SPP	1, 3, 5
4. Tony Eddleman	Nebraska Public Power District	MRO	1, 3, 5
5. Louis Guidry	CLECO Power	SPP	1, 3, 5
6. Jonathan Hayes	Southwest Power Pool	SPP	2
7. Terri Pyle	Oklahoma Gas & Electric	SPP	1, 3, 5
8. Ashley Stringer	Oklahoma Municipal Power Authority	SPP	4

8.	Group	Frank Gaffney	Florida Municipal Power Agency	X		X	X	X	X				

Additional Member	Additional Organization	Region	Segment Selection
1. Timothy Beyrle	City of New Smyrna Beach	FRCC	4
2. Greg Woessner	Kissimmee Utility Authority	FRCC	3
3. Jim Howard	Lakeland Electric	FRCC	3
4. Lynne Mila	City of Clewiston	FRCC	3
5. Joe Stonecipher	Beaches Energy Services	FRCC	1
6. Cairo Vanegas	Fort Pierce Utility Authority	FRCC	4
7. Randy Hahn	Ocala Utility Services	FRCC	3

9.	Group	Mallory Huggins	NERC Staff Technical Review										

No additional members listed.

10.	Group	David Thorne	Pepco Holdings Inc & Affiliates	X		X							

Additional Member	Additional Organization	Region	Segment Selection
1. Carlton Bradshaw	Delmarva Power and Light	RFC	1

11.	Group	Carol Gerou	MRO's NERC Standards Review Forum										X

Additional Member	Additional Organization	Region	Segment Selection
1. Mahmood Safi	Omaha Public Utility District	MRO	1, 3, 5, 6
2. Chuck Lawrence	American Transmission Company	MRO	1

Group/Individual		Commenter	Organization	Registered Ballot Body Segment									
				1	2	3	4	5	6	7	8	9	10
3. Tom Webb		Wisconsin Public Service Corporation	MRO 3, 4, 5, 6										
4. Jodi Jenson		Western Area Power Administration	MRO 1, 6										
5. Ken Goldsmith		Alliant Energy	MRO 4										
6. Alice Ireland		Xcel Energy	MRO 1, 3, 5, 6										
7. Dave Rudolph		Basin Electric Power Cooperative	MRO 1, 3, 5, 6										
8. Eric Ruskamp		Lincoln Electric System	MRO 1, 3, 5, 6										
9. Joe DePoorter		Madison Gas & Electric	MRO 3, 4, 5, 6										
10. Scott Nickels		Rochester Public Utilties	MRO 4										
11. Terry Harbour		MidAmerican Energy Company	MRO 1, 3, 5, 6										
12. Marie Knox		Midwest ISO Inc.	MRO 2										
13. Lee Kittelson		Otter Tail Power Company	MRO 1, 3, 4, 5										
14. Scott Bos		Muscatine Power and Water	MRO 1, 3, 5, 6										
15. Tony Eddleman		Nebraska Public Power District	MRO 1, 3, 5										
16. Mike Brytowski		Great River Energy	MRO 1, 3, 5, 6										
12.	Group	Jason Marshall	ACES Power Collaborators						X				
Additional Member		Additional Organization	Region Segment Selection										
1. James Jones		AEPCO/SWTC	WECC 1, 3, 5										
2. Lindsay Shepard		Sunflower Electric Power Corporation	SPP 1, 3, 5										
13.	Individual	Janet Smith, Regulaory Compliance Supervisor	Arizona Public Service Company	X		X		X	X				
14.	Individual	Bill Shultz	Southern Company Generation					X				X	
15.	Individual	Bo Jones	Westar Energy	X		X		X	X				
16.	Individual	Max Emrick	Tacoma Power	X		X	X	X	X				
17.	Individual	Jim Eckelkamp	Progress Energy	X		X		X	X				
18.	Individual	Brandy A. Dunn	Western Area Power Administration	X					X				
19.	Individual	Sandra Shaffer	PacifiCorp	X		X		X	X				
20.	Individual	Mary Jo Cooper	ZGlobal Engineering and Energy Solutions								X		
21.	Individual	Nicholas R. Finney	Saft America, Inc.								X		
22.	Individual	Tony Eddleman	Nebraska Public Power District	X		X		X				X	

Group/Individual		Commenter	Organization	Registered Ballot Body Segment									
				1	2	3	4	5	6	7	8	9	10
23.	Individual	John Bee	Exelon	X		X		X					
24.	Individual	Don Jones	Texas Reliability Entity										X
25.	Individual	Steve Alexanderson	Central Lincoln			X	X					X	
26.	Individual	Dan Roethemeyer	Dynegy Inc.					X					
27.	Individual	Thad Ness	American Electric Power	X		X		X	X				
28.	Individual	Eric Ruskamp	Lincoln Electric System	X		X		X	X				
29.	Individual	Joe O'Brien	NIPSCO	X		X		X	X				
30.	Individual	Edward Davis	Entergy Services	X		X		X	X				
31.	Individual	Michael Falvo	Independent Electricity System Operator		X								
32.	Individual	Daniel Duff	Liberty Electric Power LLC					X					
33.	Individual	Kirit Shah	Ameren	X		X		X	X				
34.	Individual	Michael Lombardi	Northeast Utilities	X		X		X					
35.	Individual	Gary Kruempel	MidAmerican Energy Company	X		X		X					
36.	Individual	Joe Petaski	Manitoba Hydro	X		X		X	X				
37.	Individual	Andrew Z. Pusztai	American Transmission Company	X									
38.	Individual	Antonio Grayson	Southern Company Transmission	X		X		X					
39.	Individual	Brian Evans-Mongeon	Utility Services, Inc								X		
40.	Individual	Michael Moltane	ITC Holdings	X									
41.	Individual	Michelle D'Antuono	Igleside Cogeneration LP					X					
42.	Individual	Armin Klusman	CenterPoint Energy	X									
43.	Individual	Darryl Curtis	Oncor Electric Delivery Company LLC	X									
44.	Individual	Tracy Richardson	Springfield Utility Board			X							
45.	Individual	Andrew Gallo	City of Austin dba Austin Energy	X		X	X	X	X				
46.	Individual	Gerry Schmitt	BGE	X									
47.	Individual	Amir Hammad	Constellation Power Generation					X					
48.	Individual	Brenda Powell	Constellation Energy Commodities Group						X				

1. **Do you have any comments regarding the existing SAR for this project?**

Summary Consideration: In response to the comments, the SDT made several changes to the SAR.

1. The proposed title of the standard was changed to 'Protection System Maintenance.'

2 Reliability Principle item #4 was removed as it does not apply to the standard.

3 The 'Transmission and Generation' descriptor of Protection Systems was removed from the Detailed Description area of the SAR.

Several comments were offered, suggesting that the SAR address validating the accuracy of settings calculations provided to the field test personnel. The SDT declined to modify the SAR because they believe validating the accuracy of settings as provided to testing personnel is an internal management issue that should be addressed by the entity, and is beyond the scope of a 'maintenance and testing' standard.

Several comments were offered, suggesting that "the requirements should reflect the inherent differences between various protection system technologies," however the requirements should not mandate different testing methods and testing intervals based on that technology." The SDT declined to modify the SAR because they believe the current PRC-005-2 draft does not mandate specific testing methods; the responsible entity has latitude in establishing its PSMP. Specific activities (such as those for various technologies of "station dc supply") are prescribed, but the entity still has discretion in determining the most appropriate method of conducting those activities.

Organization	Yes or No	Question 1 Comment
Northeast Power Coordinating Council	Yes	Maintenance and testing of protection systems is the final step in the process that begins with the calculation of settings. The calculation of settings is followed by the application of those settings to the equipment. Maintenance and testing ensures that the settings given to testing personnel have been applied as given. This Standard addresses the Maintenance and Testing of protection systems. It should also address the need to validate the accuracy of the settings given to the field. A statement should be added to the SAR to address this need.
Response: Thank you for your comment. You are correct in your observation that the standard, as established in the project scope, addresses the maintenance and testing of Protection Systems. The SDT believes validating the accuracy of settings as		

Organization	Yes or No	Question 1 Comment
provided to testing personnel is an internal management issue that should be addressed by the entity, and is beyond the scope of a 'maintenance and testing' standard. Thus, the SDT does not believe that the SAR should be modified.		
ZGlobal Engineering and Energy Solutions	Yes	Table 1-4(a-c) excludes distributed UFLS and UVLS for batteries but references Table 3. Table 3 does not mention an interval for batteries. Is this an error?
Response: Thank you for your comment. In Table 3 we address the dc supply for tripping only non-BES interrupting devices as part of the UFLS and UVLS system. Table 3 explicitly limits the activities and intervals for station dc supply (relative to distributed UVLS/UFLS) to verifying the Protection System dc supply voltage every 12 calendar years, and requires nothing beyond that for station batteries in this application. This is not an error within the standard.		
Utility Services, Inc	Yes	We would urge that the SAR be modified to include Validation of Protection System settings. Presently, the standard does not provide for the explicit validation of the settings and it is possible that such mis-settings could be the reason for a misoperation. If a validation of the settings was explicitly called for in the standard, then the misoperation would be less likely to occur for that reason.
Response: Thank you for your comment. The SDT believes validating the accuracy of settings as provided to testing personnel is an internal management issue that should be addressed by the entity, and is beyond the scope of a 'maintenance and testing' standard. Thus, the SDT does not believe that the SAR should be modified. If this becomes a "Misoperation" problem for the entity, NERC Reliability Standard PRC-004-2 requires the entity to develop and implement a Corrective Action Plan to address the cause of the Misoperation.		
Constellation Power Generation	Yes	Although Constellation Power Generation agrees with some of the refinements prescribed in the SAR, there are a few items of concern. Constellation Power Generation agrees that "the requirements should reflect the inherent differences between various protection system technologies," however the requirements should not mandate different testing methods and testing intervals based on that technology. The Registered Entity should be given the latitude to address different technologies through its PSMP, and the requirements should reflect that.

Organization	Yes or No	Question 1 Comment
Response: Thank you for your comment. The SDT believes the current PRC-005-2 draft does not mandate specific testing methods; the responsible entity has latitude in establishing its PSMP. Specific activities (such as those for various technologies of "station dc supply") are prescribed, but the entity still has discretion in determining the most appropriate method of conducting those activities.		
Constellation Energy Commodities Group	Yes	Although Constellation Energy Commodities Group agrees with some of the refinements prescribed in the SAR, there are a few items of concern. Constellation Energy Commodities Group agrees that "the requirements should reflect the inherent differences between various protection system technologies," however the requirements should not mandate different testing methods and testing intervals based on that technology. The Registered Entity should be given the latitude to address different technologies through its PSMP, and the requirements should reflect that.
Response: Thank you for your comment. The SDT believes the current PRC-005-2 draft does not mandate specific testing methods; the responsible entity has latitude in establishing its PSMP. Specific activities (such as those for various technologies of "station dc supply") are prescribed, but the entity still has discretion in determining the most appropriate method of conducting those activities.		
Saft America, Inc.	Yes	
Manitoba Hydro	No	**1.** Detailed Description: The phrase "Transmission & Generation Protection Systems" used in paragraph 1 should be "Transmission and generation Protection Systems". "Transmission" and "Protection System" are defined words in the NERC Glossary of Terms; "Generation" is not a defined term and should not be capitalized. **2.** Applicable Reliability Principles: Is item 4 [Plans for emergency operation and system restoration of interconnected bulk electric systems shall be developed, coordinated, maintained and implemented.] applicable to Protection System Maintenance?
Response: Thank you for your comment.		

Organization	Yes or No	Question 1 Comment
1. The SAR has been modified in consideration of your comment. The SDT removed the "Transmission & Generation" descriptors from the sentence. 2. The SAR has been modified in consideration of your comment. The Applicable Reliability Principle 4 has been unchecked as it is not applicable to this standard.		
Tennessee Valley Authority	No	
PNGC Comment Group	No	
Bonneville Power Administration	No	
Dominion	No	
FirstEnergy	No	
Southwest Power Pool Standards Review Group	No	
Florida Municipal Power Agency	No	
NERC Staff	No	

Organization	Yes or No	Question 1 Comment
Technical Review		
Pepco Holdings Inc & Affiliates	No	
MRO's NERC Standards Review Forum	No	
ACES Power Collaborators	No	
Arizona Public Service Company	No	
Southern Company Generation	No	
Westar Energy	No	
Tacoma Power	No	
Progress Energy	No	
Western Area Power Administration	No	

Organization	Yes or No	Question 1 Comment
PacifiCorp	No	
Nebraska Public Power District	No	
Exelon	No	
Texas Reliability Entity	No	
Central Lincoln	No	
Dynegy Inc.	No	
Lincoln Electric System	No	
NIPSCO	No	
Entergy Services	No	
Independent Electricity System Operator	No	
Liberty Electric Power LLC	No	

Organization	Yes or No	Question 1 Comment
Ameren	No	
Northeast Utilities	No	
MidAmerican Energy Company	No	
American Transmission Company	No	
Southern Company Transmission	No	
ITC Holdings	No	
Igleside Cogeneration LP	No	
Oncor Electric Delivery Company LLC	No	
Springfield Utility Board	No	
City of Austin	No	

Organization	Yes or No	Question 1 Comment
dba Austin Energy		
BGE	No	No comment.
Response: Thank you for your comment.		

2. In response to comments, the term "Maintenance Correctable Issue" was revised to "Unresolved Maintenance Issue". Do you agree with this change? If you do not agree, please provide specific suggestions for improvement.

Summary Consideration: Most commenters agreed with the change in the term from "Maintenance Correctable Issue" to "Unresolved Maintenance Issue", with some offering further suggestion for improvement and clarification. Several commenters expressed concern that, without further clarity, auditors may confuse initiation of resolution for an issue with completion of the activities necessary to ultimately resolve the issue, but the SDT believes that this term (and its use within the Standard) is unequivocal. In response to comments, the SDT has clarified the intent of the requirement to initiate resolution of Unresolved Maintenance Issues by including it separately as Requirement R5 (shown below) and revising the language such that the responsible entity must demonstrate its efforts to correct Unresolved Maintenance Issues. Demonstrating the entity has initiated resolution can include such things as documentation of a work order, replacement component order, invoice, or purchase order, etc… Producing evidence of this nature would then indicate adherence to the requirement.

Requirement R5 now reads:

R5. Each Transmission Owner, Generator Owner, and Distribution Provider shall demonstrate efforts to correct identified Unresolved Maintenance Issues.

Organization	Yes or No	Question 2 Comment
Occidental Chemical	Affirmative Ballot	In response to comments, the term "Maintenance Correctable Issue" was revised to "Unresolved Maintenance Issue". Do you agree with this change? If you do not agree, please provide specific suggestions for improvement. Yes. The original term inferred that the problem detected was correctible through follow-up maintenance – which is not always the case. The term "Unresolved Maintenance Issue" is more appropriate.
Response: Thank you for your comment and your Affirmative Ballot.		
Independent Electricity System	Yes	The IESO agrees with the revision to the term. However, we observed the inconsistent format of this defined term used throughout the draft standard and would like to point it out to the Drafting Team. The capitalized term "Unresolved Maintenance Issue" is defined on Page 2 and used as a capitalized term in the blue box on Page 5. The defined term was made

Organization	Yes or No	Question 2 Comment
Operator		lowercase and used in other areas of the document as "unresolved maintenance issues" (eg. Page 5 and Page 8). We recommend that the format of this defined term be consistent throughout the draft standard.
Response: Thank you for your comment. The SDT has capitalized the term throughout the standard for consistency.		
MidAmerican Energy Company	Yes	1. Requirement R3 includes the following: "and initiate resolution of any unresolved maintenance issues". For clarification it is recommended that the following change be made to this phrase: "initiate resolution of any unresolved Protection System maintenance issues". 2. Also it is recommended that the following be added to the list in M3: "work management system information".
Response: Thank you for your comment. **1. The SDT observes that your concern is addressed by the Applicability of the standard (specifically addressing Protection Systems), and that the change you suggest is unnecessary.** **2. The language of Measure M3 specifies "*may include but is not limited to dated maintenance records …*" and could include records and information from a work management system without excluding other maintenance records an entity might have outside a work management system.**		
Utility Services, Inc	Yes	While this helps, we are concerned that during the term of the Unresolved Maintenance Issue is being resolved, a question of compliance to the standard might be pending out. It should be clarified that during this term, compliance to the standard is being satisfied and not deemed to be non-compliant.
Response: Thank you for your comment. The SDT has clarified the intent of the requirement to initiate resolution of Unresolved Maintenance Issues by including it separately as Requirement R5 and revising the language such that the responsible entity must demonstrate its efforts to correct Unresolved Maintenance Issues.		
Igleside	Yes	The original term inferred that the problem detected was correctible through follow-up

Organization	Yes or No	Question 2 Comment
Cogeneration LP		maintenance -which is not always the case. The term “Unresolved Maintenance Issue” is more appropriate.
Response: Thank you for your comment.		
Springfield Utility Board	Yes	This change has no impact on how Springfield Utility Board currently operates.
Response: Thank you for your comment.		
Dominion	Yes	
FirstEnergy	Yes	
Southwest Power Pool Standards Review Group	Yes	
Florida Municipal Power Agency	Yes	
NERC Staff Technical Review	Yes	
Pepco Holdings Inc & Affiliates	Yes	
ACES Power	Yes	

Organization	Yes or No	Question 2 Comment
Collaborators		
Arizona Public Service Company	Yes	
Westar Energy	Yes	
Tacoma Power	Yes	
Western Area Power Administration	Yes	
PacifiCorp	Yes	
Saft America, Inc.	Yes	
Nebraska Public Power District	Yes	
Exelon	Yes	
Dynegy Inc.	Yes	
Lincoln Electric System	Yes	
Entergy Services	Yes	

Organization	Yes or No	Question 2 Comment
Liberty Electric Power LLC	Yes	
Ameren	Yes	
Northeast Utilities	Yes	
Manitoba Hydro	Yes	
American Transmission Company	Yes	
ITC Holdings	Yes	
Oncor Electric Delivery Company LLC	Yes	
City of Austin dba Austin Energy	Yes	
Bonneville Power Administration	No	BPA agrees that the term “Maintenance Correctable Issue” is an improvement over “Unresolved Maintenance Issue”, however, BPA feels that the idea of a “Maintenance Correctable Issue” is very vague, and would perhaps be better left out of the standard. As written, it is unclear when an issue is a “Maintenance Correctable Issue” and exactly how it has to be dealt with. R3 requires the initiation of resolution of any unresolved

Organization	Yes or No	Question 2 Comment
		maintenance issues.
Response: Thank you for your comment. **The SDT has clarified the intent of the requirement to initiate resolution of Unresolved Maintenance Issues by including it separately as Requirement R5 and revising the language such that the responsible entity must demonstrate its efforts to correct Unresolved Maintenance Issues.**		
MRO's NERC Standards Review Forum	No	Requirement R3 includes the following: "and initiate resolution of any unresolved maintenance issues". The addition of unresolved maintenance issues to the standard is not included in the SAR and has the potential to cause confusion and misinterpretation. It is suggested that this phrase be removed.
Response: Thank you for your comment. The SAR was developed and submitted by the NERC System Protection and Control Task Force (SPCTF) who later prepared and submitted the Technical Reference "Protection System Maintenance" as a guide for the SDT to use in developing PRC-005-2. In crafting the elements of PRC-005-2, the SDT has endeavored to follow the SAR, which directs addressing FERC Order 693 directives; recommendations from the SPCTF Assessment of Standards PRC-005-1, PRC-008-0, PRC-011-0, PRC-017-0; and consideration of stakeholder comments received during the development of the Version 0 and Phase III & IV standards. **In the Detailed Description section of the SAR, bullet point four recommends the SDT define the terms "maintenance programs" and "testing programs" while recognizing other terms may be necessary for clarity. The SPCTF Assessment further recommends that PRC-005-2 "…should clarify that two goals are being covered: The maintenance portion should have requirements that keep the protection system equipment operating within manufacturers' design specifications throughout the service life" and the "testing portion should… verify the functional performance of protection systems". Additionally, in the SPCTF Technical Reference "Protection System Maintenance", the term "maintenance" is defined as "An ongoing program by which Protection System function is proved, and restored if needed."** **The SDT developed and defined the term "Protection System Maintenance Program" (PSMP) and its elements (which includes the testing portion) to achieve the goal of the recommendations of the SAR, SPCTF Assessment, and guidance given in the SPCTF Technical Reference. Consistent with this guidance, a PSMP is defined in PRC-005-2 as "An ongoing program by which Protection System components are kept in working order and proper operation of malfunctioning components is restored." The term "Unresolved Maintenance Issue" defines those things identified as needing follow-up action in order to restore them to proper**		

Organization	Yes or No	Question 2 Comment
operation. This may include repair or replacement activities that cannot be performed during the periodic PSMP activity through which the deficiency was discovered. Demonstrating the entity has initiated resolution of these issues might then include such things as documentation of a work order, replacement component order, invoice, or purchase order, etc… For clarity, the SDT has included these examples in the associated Measure for this requirement in the current draft. **The SDT has clarified the intent of the requirement to initiate resolution of Unresolved Maintenance Issues by including it separately as Requirement R5 and revising the language such that the responsible entity must demonstrate its efforts to correct Unresolved Maintenance Issues.**		
Southern Company Generation	No	The measure associated with the requirement that includes this term is non-specific with regards to what an auditor will require as proof of the initiation of resolving the issue. It is suggested that one of these two courses be followed: either a) eliminate the requirement to initiate resolution, or b) fully describe what evidence is expected for this part.
Response: Thank you for your comment. The SDT believes that an effective PSMP must include correction of deficiencies, but management of completion of any Unresolved Maintenance Issues is a complex topic which may involve a wide variety of activities (with varying completion timelines). The associated Measure lists examples of what may be effective evidence (more examples have been added); specific evidence, for any specific situation, will vary based on the particulars of that situation. The SDT has clarified the intent of the requirement to initiate resolution of Unresolved Maintenance Issues by including it separately as Requirement R5 and revising the language such that the responsible entity must demonstrate its efforts to correct Unresolved Maintenance Issues.		
American Electric Power	No	The definition's wording is satisfactory, and we agree with the removal of "failure of a component to operate within design parameters". However, we do not agree with the use of the word "unresolved" within the term itself, as we believe this word may convey that the issue was not known or identified. We suggest replacing "Unresolved Maintenance Issue" with "Corrective Maintenance Issue".
Response: Thank you for your comment. The SDT has clarified the intent of the requirement to initiate resolution of Unresolved Maintenance Issues by including it separately as Requirement R5 and revising the language such that the responsible entity must demonstrate its efforts to correct Unresolved Maintenance Issues.		

Organization	Yes or No	Question 2 Comment
Southern Company Transmission	No	The measure associated with the requirement that includes this term is non-specific with regards to what an auditor will require as proof of the initiation of resolving the issue. It is suggested that one of these two courses be followed: either a) eliminate the requirement to initiate resolution, or b) fully describe what evidence is expected for this part.
Response: Thank you for your comment. **The SDT believes that an effective PSMP must include correction of deficiencies, but management of completion of any Unresolved Maintenance Issues is a complex topic which may involve a wide variety of activities (with varying completion timelines). The associated Measure lists examples of what may be effective evidence (more examples have been added); specific evidence, for any specific situation, will vary based on the particulars of that situation. The SDT has clarified the intent of the requirement to initiate resolution of Unresolved Maintenance Issues by including it separately as Requirement R5 and revising the language such that the responsible entity must demonstrate its efforts to correct Unresolved Maintenance Issues.**		
BGE	No	No comment about the change itself, but the terms were not consistently applied in the Supplemental Reference Manual (see last comment).
Response: Thank you for your comment. The SDT has further reviewed and revised the Supplementary Reference and FAQ document to facilitate consistent use of the terms.		
Constellation Power Generation	No	As R3 is currently written, Constellation Power Generation is concerned that this requirement may decrease the reliability of the BES under certain circumstances. The severity of the "deficiency" found will dictate the method and timing of a "follow up correction action". For a generator, the corrective action may not be "initiated" until the next planned outage, which may be a few years. However, R3 suggests that to comply, a generation site may have to extend an outage or take a forced and unplanned outage, to perform the corrective action. This would decrease the available resources in a given BA's footprint and potentially decrease the reliability of the BES.
Response: Thank you for your comment. **PRC-005-2 only requires the entity "… *initiate resolution*" of the issue found. The SDT recognizes that performance of the activities**		

Organization	Yes or No	Question 2 Comment
necessary to resolve an issue are entirely dependent upon the circumstances surrounding that issue and, consequently, will require varying amounts of resources and time to complete the process. The SDT has clarified the intent of the requirement to initiate resolution of Unresolved Maintenance Issues by including it separately as Requirement R5 and revising the language such that the responsible entity must demonstrate its efforts to correct Unresolved Maintenance Issues. Demonstrating the entity has initiated resolution can include such things as documentation of a work order, replacement component order, invoice, or purchase order, etc… Producing evidence of this nature would then indicate adherence to the requirement.		
Constellation Energy Commodities Group	No	As R3 is currently written, Constellation Energy Commodities Group is concerned that this requirement may decrease the reliability of the BES under certain circumstances. The severity of the "deficiency" found will dictate the method and timing of a "follow up correction action". For a generator, the corrective action may not be "initiated" until the next planned outage, which may be a few years. However, R3 suggests that to comply, a generation site may have to extend an outage or take a forced and unplanned outage, to perform the corrective action. This would decrease the available resources in a given BA's footprint and potentially decrease the reliability of the BES.
Response: Thank you for your comment. **PRC-005-2 only requires the entity "… *initiate resolution*" of the issue found. The SDT recognizes that performance of the activities necessary to resolve an issue are entirely dependent upon the circumstances surrounding that issue and, consequently, will require varying amounts of resources and time to complete the process. The SDT has clarified the intent of the requirement to initiate resolution of Unresolved Maintenance Issues by including it separately as Requirement R5 and revising the language such that the responsible entity must demonstrate its efforts to correct Unresolved Maintenance Issues. Demonstrating the entity has initiated resolution can include such things as documentation of a work order, replacement component order, invoice, or purchase order, etc… Producing evidence of this nature would then indicate adherence to the requirement.**		
PNGC Comment Group	No	
Central Lincoln		Either term works if defined properly.

Organization	Yes or No	Question 2 Comment
Response: Thank you for your comment.		

3. In response to comments, the SDT revised the previous "3 calendar months" interval to "4 calendar months" for communications systems and station dc supply. Do you agree with this change? If you do not agree, please provide specific suggestions for improvement.

Summary Consideration: Most commenters agreed with the change; however, several commenters suggested further extension of these intervals. The SDT did not make any further changes to those intervals, explaining their belief that the established intervals are appropriate maximum intervals for this continent-wide standard. A few commenters continued to object to the establishment of maximum allowable intervals as specified in FERC Order 693; the SDT did not adopt any related suggestions, and instead reminded the commenters of FERC's directives.

Organization	Yes or No	Question 3 Comment
CPS Energy	Affirmative Ballot	The 4 month maintenance and testing interval for station DC supply is too short based on programs that have been in service for many years where twelve months have been proven as reliable for operation.
Response: Thank you for your comments **This 4 month interval is an "inspect and verify" activity not testing. FERC Order 693 and the approved SAR direct the SDT to develop a standard with maximum allowable intervals and minimum maintenance activities. The SDT believes that the intervals established within the Tables are appropriate as continent-wide maximum allowable intervals, with due consideration for any monitoring functionality that may be present (per Table 1-4f).**		
Occidental Chemical	Affirmative Ballot	In response to comments, the SDT revised the previous "3 calendar months" interval to "4 calendar months" for communications systems and station dc supply. Do you agree with this change? If you do not agree, please provide specific suggestions for improvement. Yes. Ingleside Cogeneration LP agrees that the intervals on the activities in question should be extended to 4 calendar months. However on Page 20 of the Supplementary Reference document, the calculation of the next due date using units of "calendar months" is inconsistent with the calculation using a "calendar year". In the case of "calendar years", an activity must take place somewhere between Jan 1 and Dec 31. For "four calendar months", a follow-up activity must be performed within four months from the completion of the prior one. We believe that "four

Organization	Yes or No	Question 3 Comment
		calendar months" should be calculated in the same manner as a "calendar year". This means that an activity should take place at least once between January 1 and April 30; and repeated once during May 1 through August 31, and again between September 1 and December 31. The pattern would continue in ongoing years. Not only is this method consistent with the "calendar year" derivation, it allows the most flexibility in scheduling – especially if an unexpected event causes a delay. The vast majority of the maintenance activities will still take place at four months plus or minus a week or two; with an occasional outlier that adds minimal risk to reliability.
Response: Thank you for your comments. **Section 7.1 of the Supplementary Reference and FAQ document has been modified in consideration of your comment.**		
Wisconsin Electric Power Co. Wisconsin Electric Power Marketing	Affirmative Ballot	Focusing on batteries which are required to be done on a time-based maintenance program: 1. The big picture is that it is not just testing anymore - there are many more mandated tasks to be performed - Table 1-4(a). - Verifications & inspections are now part of the plan criteria, and have been moved from 3 months to a 4 month maximum interval. 2. We would like to see clarification on what is meant by the extent of 4 months. Is it by the end of the same calendar day or the previous calendar day, four months later; or is it 120 days or what? Could plan to manage to every 3 months, but not greater than 4 months. Same for Battery testing - manage to 1 year, but not greater than 18 months. 3. What is meant by battery continuity? Is battery float current an acceptable test methodology? It is not defined as clearly as an "impedance" or "resistance" test.
Response: Thank you for your comments. **1. The SDT believes that all of the maintenance activities within the "definition" of PSMP and as listed in the Tables are necessary components of an effective PSMP. Testing alone cannot assure that the Protection System components are in good working order.** **2. Section 7.1 of the Supplementary Reference and FAQ document provides an expanded discussion of this topic, and has been revised to add further clarity.**		

Organization	Yes or No	Question 3 Comment
3. "Continuity" can be tested via several methods, and is described in detail in Section 15.4 of the Supplementary Reference and FAQ document. Battery float current is one of the many methods discussed within the Supplementary Reference Document.		
PNGC Comment Group	Yes	We agree with this change. Smaller utilities, especially in the WECC region, in many cases have large territories to cover with limited resources. In many instances sub-stations are inaccessible during the winter and the 4 month interval will assist these smaller entities in getting the work done.
Response: Thank you for your comment		
MRO's NERC Standards Review Forum	Yes	We agree 4 calendar months is better than 3 Calendar months. The 4 month activities should be removed from Tables 1-4(a, b, c, d). These requirements are blurring the distinction between a best practice and functionally verifying the component. IEEE already sets the industries best practices, if a Reliability Standard includes best maintenance practices it is encroaching on IEEE's ability to keep the industry informed and optimized. The Standard Drafting Team should restrain itself to only making requirements that functionally verify components and initiate corrective action wherever possible. We recommend that this time frame be a maximum of 6 Calendar Months which will allow entities to establish their own time frame based on the seasonal changes that occur where the batteries are located.
Response: Thank you for your comments. **Station dc supply (including station batteries) must perform properly for the Protection System to function correctly. In order to establish that station batteries are functioning properly, the SDT believes that all of the listed maintenance activities must be performed, within the specified maximum intervals, with due consideration for any monitoring functionality that may be present. The SDT has drawn from the relevant IEEE standards (and other sources) to determine those activities that it has deemed appropriate to assure proper performance of the station battery. The SDT specifically believes that the 4-month maximum interval is proper for these activities for unmonitored DC supply systems and is consistent with the prevailing industry practice.**		
Tacoma Power	Yes	A similar change in interval should be applied to intervals of "6 calendar months".

Organization	Yes or No	Question 3 Comment
Response: Thank you for your comments **The SDT believes that the six-month interval is appropriate.**		
Nebraska Public Power District	Yes	We agree 4 calendar months is better than 3 Calendar months. The 4 month activities should be removed from Tables 1-4 (a, b, c, d). These requirements are blurring the distinction between a best practice and functionally verifying the component. IEEE already sets the industries best practices, if a Reliability Standard includes best maintenance practices it is encroaching on IEEE's ability to keep the industry informed and optimized. The Standard Drafting Team should restrain itself to only making requirements that functionally verify components and initiate corrective action wherever possible.
Response: Thank you for your comments. **Station dc supply (including station batteries) must perform properly for the Protection System to function correctly. In order to establish that station batteries are functioning properly, the SDT believes that all of the listed maintenance activities must be performed, within the specified maximum intervals. The SDT has drawn from the relevant IEEE standards (and other sources) to determine those activities that it has deemed appropriate to assure proper performance of station batteries. The SDT specifically believes that the 4-month maximum interval is proper for these activities for unmonitored DC supply systems and is consistent with the prevailing industry practice.**		
Central Lincoln	Yes	Thank you for making this change. As we pointed out in draft 2, a three month maximum would require a bi-monthly target to allow for contingencies; increasing maintenance from four times a year (per the IEEE battery standards) to six.
Response: Thank you for your comment.		
Ameren	Yes	Our experience with a very large number of communication systems and station dc supplies substantiates an even longer interval as sufficient for reliable Protection Systems.
Response: Thank you for your comment. If your experience suggests that longer intervals for communications systems will produce appropriate performance, you may employ performance-based maintenance (per the draft standard). However, SDT		

Organization	Yes or No	Question 3 Comment
believes that all of the listed maintenance activities for station dc supply must be performed, within the specified maximum intervals, with due consideration for any monitoring functionality that may be present.		
Ingleside Cogeneration LP	Yes	Ingleside Cogeneration LP agrees that the intervals on the activities in question should be extended to 4 calendar months. However on Page 20 of the Supplementary Reference document, the calculation of the next due date using units of "calendar months" is inconsistent with the calculation using a "calendar year". In the case of "calendar years", an activity must take place somewhere between Jan 1 and Dec 31. For "four calendar months", a follow-up activity must be performed within four months from the completion of the prior one. We believe that "four calendar months" should be calculated in the same manner as a "calendar year". This means that an activity should take place at least once between January 1 and April 30; and repeated once during May 1 through August 31, and again between September 1 and December 31. The pattern would continue in ongoing years. Not only is this method consistent with the "calendar year" derivation, it allows the most flexibility in scheduling - especially if an unexpected event causes a delay. The vast majority of the maintenance activities will still take place at four months plus or minus a week or two; with an occasional outlier that adds minimal risk to reliability.
Response: Thank you for your comments. Section 7.1 of the Supplementary Reference and FAQ document provides an expanded discussion of this topic, and has been revised to add further clarity.		
BGE	Yes	BGE appreciates the SDT demonstrating flexibility by extending these maintenance intervals.
Response: Thank you for your comment.		
Springfield Utility Board	Yes	This change has no impact on how Springfield Utility Board currently operates.
Response: Thank you for your comment.		
MidAmerican Energy	Yes	None

Organization	Yes or No	Question 3 Comment
Company		
Bonneville Power Administration	Yes	
Dominion	Yes	
FirstEnergy	Yes	
Southwest Power Pool Standards Review Group	Yes	
Florida Municipal Power Agency	Yes	
Pepco Holdings Inc & Affiliates	Yes	
ACES Power Collaborators	Yes	
Southern Company Generation	Yes	
Westar Energy	Yes	

Organization	Yes or No	Question 3 Comment
Progress Energy	Yes	
Western Area Power Administration	Yes	
PacifiCorp	Yes	
Saft America, Inc.	Yes	
Exelon	Yes	
Dynegy Inc.	Yes	
Lincoln Electric System	Yes	
Entergy Services	Yes	
Independent Electricity System Operator	Yes	
Liberty Electric Power LLC	Yes	
American Transmission	Yes	

Organization	Yes or No	Question 3 Comment
Company		
Southern Company Transmission	Yes	
ITC Holdings	Yes	
Oncor Electric Delivery Company LLC	Yes	
City of Austin dba Austin Energy	Yes	
Northeast Utilities	Yes	
Manitoba Hydro	No	Manitoba Hydro maintains that the battery inspection interval should be extended to 6 months. The 4 month interval is too frequent based on our experience and while IEEE std 450 (which seems to be the basis for table 1-4) does recommend intervals, it also states that users should evaluate these recommendations against their own operating experience. Our experience shows that 6 month battery inspections are more than adequate to maintain system reliability.Manitoba Hydro has more than ten years of experience using its existing battery inspection intervals, and Manitoba Hydro's reliability data has proven that the 6 month inspection interval is suitable for Manitoba Hydro. Manitoba Hydro's battery maintenance tasks were derived from a reliability study of Manitoba Hydro stationary batteries, and the tasks and intervals are suitable given Manitoba Hydro's installed plant, design criteria, climate, and reliability performance. A more frequent inspection interval might be more suitable to specific utilities with material differences in climate, design, installed apparatus, and performance, but it is not suitable for Manitoba Hydro

Organization	Yes or No	Question 3 Comment
		and may be more than is required for many other utilities. To use a more frequent inspection interval would significantly penalize Manitoba Hydro which has been diligently performing battery inspections for many years, with no resulting increase in reliability. With the 4 month battery check frequency and no allowance for a grace period, there may be a negative impact on reliability caused by diverting resources away from projects that are critical to reliability to meet this maintenance interval.
Response: Thank you for your comments. **This 4 month interval is an "inspect and verify" activity not testing. FERC Order 693 and the approved SAR direct the SDT to develop a standard with maximum allowable intervals and minimum maintenance activities. The SDT believes that the intervals established within the Tables are appropriate as continent-wide maximum allowable intervals, with due consideration for any monitoring functionality that may be present (per Table 1-4f).**		
Arizona Public Service Company	No	APS has been testing batteries nominally every 4 months plus 25% for over 20 years with no adverse consequences. Requiring a maximum of testing every 4 months doesn't allow for any flexibility, would require an additional 400 tests per year and APS does not consider the 4 months a maximum time limit for battery testing.
Response: Thank you for your comments. **This 4 month interval is an "inspect and verify" activity not testing. FERC Order 693 and the approved SAR direct the SDT to develop a standard with maximum allowable intervals and minimum maintenance activities. The SDT believes that the intervals established within the Tables are appropriate as continent-wide maximum allowable intervals, with due consideration for any monitoring functionality that may be present (per Table 1-4f).**		
Utility Services, Inc	No	The standard should provide guidance what tasks need to be accomplished for compliance and not mandates on specifics like this. Registered Entities should be left to determine the appropriate intervals based upon their experience and good utility practices.
Response: Thank you for your comments **FERC Order 693 and the approved SAR direct the SDT to develop a standard with maximum allowable intervals and minimum**		

Organization	Yes or No	Question 3 Comment
maintenance activities. The SDT believes that the intervals established within the Tables are appropriate as continent-wide maximum allowable intervals, with due consideration for any monitoring functionality that may be present. If an entity's experience is that some components require less-frequent maintenance than specified in the Tables, a performance-based program in accordance with Requirement R2 and Attachment A is an option unless specifically precluded.		
American Electric Power	No	Though we agree with extending the interval from what it was previously, AEP recommends that the interval in Table 1-2 for Communications Systems be increased to 6 months.
Response: Thank you for your comments **The SDT believes that the revised 4-month maximum interval is proper for unmonitored communications systems.**		
Tennessee Valley Authority	No	

4. The SDT extracted the maintenance activities and intervals for distributed UFLS and UVLS systems from Table 1-1 through 1-5 and placed them into a new Table 3 to more clearly illustrate the requirements related to these systems. Do you agree with this change? If you do not agree, please provide specific suggestions for improvement.

Summary Consideration: Most commenters appreciated the break-out of distributed UFLS/UVLS maintenance activities into Table 3. Several commenters, however, continued to object to inclusion of this maintenance within the standard, and some questioned NERC's jurisdiction to address devices installed on the distribution system. The SDT consulted with NERC legal staff on the jurisdiction question, and cited the position from NERC Legal in responding that these devices are indeed within NERC's authority because they are installed for the reliability of the BES. Several commenters also objected to the requirements relating to periodic operation of electromechanical devices, maintenance of voltage and current sensing devices, and/or maintenance of the dc supply within the new Table 3, and the SDT provided responses supporting the SDT's belief that all of these activities are relevant and necessary for inclusion within the standard. Several other commenters suggested formatting changes, most of which were adopted. While considering these comments, the SDT also made assorted clarifying changes to Table 3.

Organization	Yes or No	Question 4 Comment
Occidental Chemical	Affirmative Ballot	The SDT extracted the maintenance activities and intervals for distributed UFLS and UVLS systems from Table 1-1 through 1-5 and placed them into a new Table 3 to more clearly illustrate the requirements related to these systems. Do you agree with this change? If you do not agree, please provide specific suggestions for improvement. Yes. We believe that distributed UFLS and UVLS relay systems have a very different operating purpose than those that are not distributed. It is appropriate to separate the maintenance activities and intervals for these relay systems.
Response: Thank you for your support.		
Southern Company Generation	Yes	1. Separating this classification of equipment into its own table is a good idea to make it easier for the owners of this equipment to figure out what they must do. 2. Consider also moving the UVLS note (found in column 1 of Tables 1-4a-d) into the header with

Organization	Yes or No	Question 4 Comment
		the other "UFLS and UVLS note" to simplify the table. The header note could read "Excludes UFLS and UVLS systems - see Table 1-4e for non-distributed UFLS and UVLS systems and see Table 3 for distributed UFLS and UVLS systems"). 3. Table 1-5: Need clarification on "continuity and energization or ability to operate". What does this mean? 4. For UF and UV schemes, Table 3 does not specifically state to check the alarm(s) to a control center (for monitored components). There are some references to Table 2 (i.e. See Table 2), but does that mean that you have to verify the alarm(s)? We think that the Table 2 details need to be included specifically in Table 3. Or, make it very clear that this test is required for UF and UV schemes.
Response: **1. Thank you for your support.** **2. Thank you for your comment, Table 1-4 (a, b, c, d) has been revised accordingly.** **3. This entry in Table 1-5 has been modified to "Control circuitry whose integrity is monitored and alarmed". Section 15.3 of the Supplementary Reference and FAQ document provides additional discussion on this topic.** **4. The SDT has revised the Table 2 for clarity.**		
Ameren	Yes	Please consistently state UFLS before UVLS; Table 1-4(e) differs from other parts of the standard.
Response: Thank you for your suggestion; the SDT has revised the standard.		
Northeast Utilities	Yes	The migration of the UFLS and UVLS requirements to Table 3 is appreciated. The Table 3 Component Attributes in rows 6 and 7 ("Control circuitry between the UFLS or UVLS relays and electromechanical lockout and/or tripping auxiliary devices" and Electromechanical lockout and/or tripping auxiliary devices associated only with UFLS or UVLS systems" respectively) do not identify that the trip coils are excluded. Although row 9 states "Trip coils of non-BES interrupting devices in UFLS or UVLS systems" do not have any period maintenance specified, our recommendation is to

Organization	Yes or No	Question 4 Comment
		annotate rows 6 and 7 to explicitly indicate the trip coils are excluded.
Response: Thank you for support. The SDT has revised Table 3 accordingly.		
MidAmerican Energy Company	Yes	None
Southern Company Transmission	Yes	For UF and UV schemes, Table 3 does not specifically state to check the alarm(s) to a control center (for monitored components). There are some references to Table 2 (i.e. See Table 2), but does that mean that you have to verify the alarm(s)? I think Table 2 details need to be included specifically in Table 3. Or make it very clear that this test is required for UF and UV schemes.
Response: Thank you for your comment. The SDT has revised Table 2 for clarity.		
Ingleside Cogeneration LP	Yes	We believe that distributed UFLS and UVLS relay systems have a very different operating purpose than those that are not distributed. It is appropriate to separate the maintenance activities and intervals for these relay systems.
Response: Thank you for your support.		
Springfield Utility Board	Yes	Although numerous tables can become overwhelming to navigate, it is far less ambiguous if specific systems are spelled out in separate and distinct tables.
Response: Thank you for your support.		
Ameren	Yes	Please consistently state UFLS before UVLS; Table 1-4(e) differs from other parts of the standard.
Response: Thank you for your suggestion. The SDT has revised the standard.		
Oncor Electric Delivery	Yes	

Organization	Yes or No	Question 4 Comment
Company LLC		
City of Austin dba Austin Energy	Yes	
PNGC Comment Group	Yes	
Bonneville Power Administration	Yes	
Dominion	Yes	
FirstEnergy	Yes	
Southwest Power Pool Standards Review Group	Yes	
City of Austin dba Austin Energy	Yes	
Pepco Holdings Inc & Affiliates	Yes	
MRO's NERC Standards	Yes	

Organization	Yes or No	Question 4 Comment
Review Forum		
ACES Power Collaborators	Yes	
Arizona Public Service Company	Yes	
Westar Energy	Yes	
Tacoma Power	Yes	
Progress Energy	Yes	
Western Area Power Administration	Yes	
PacifiCorp	Yes	
Saft America, Inc.	Yes	
Nebraska Public Power District	Yes	
Exelon	Yes	
Texas Reliability Entity	Yes	

Organization	Yes or No	Question 4 Comment
Central Lincoln	Yes	
Dynegy Inc.	Yes	
American Electric Power	Yes	
Lincoln Electric System	Yes	
Entergy Services	Yes	
Independent Electricity System Operator	Yes	
Liberty Electric Power LLC	Yes	
Manitoba Hydro	Yes	
American Transmission Company	Yes	
Utility Services, Inc	Yes	

Organization	Yes or No	Question 4 Comment
ITC Holdings	Yes	
Flathead Electric Cooperative	Negative Ballot	I appreciate the drafting team's effort to separate requirements for distributed UFLS, however fundamentally it is unclear how mandatory and enforceable requirements can be applied to non-BES elements as there is no statutory authority over local distribution networks.
Response: Thank you for comment. In regards to your concern, the SDT received the following position from NERC Legal: **"While UFLS and UVLS equipment are located on the distribution network, their job is to protect the Bulk Electric System. This is not beyond the scope of NERC's 215 authority.** **FPA section 215(a) definitions section defines "bulk-power system as (A) facilities and control systems necessary for operating an interconnected electric energy transmission network (or any portion thereof)." That definition then is limited by a later statement which adds the term bulk-power system "does not include facilities used in the local distribution of electric energy." Also, section 215 also covers users, owners, and operators of bulk-power facilities.** **UFLS and UVLS (when the UVLS is installed to prevent system voltage collapse or voltage instability for BES reliability) are not "used in the local distribution of electric energy" despite their location on local distribution networks. Further, if UFLS/UVLS facilities were not covered by the Reliability Standards, then in order to protect the integrity of the BES during under-frequency or under-voltage events, that load would have to be shed at the transmission bus to ensure the load-generation balance and voltage stability is maintained on the BES."**		
Lakeland Electric	Negative Ballot	The standard reaches further into the distribution system for UFLS and UVLS. It will be burdensome to present all the evidence of distribution class protection system maintenance and testing at audits.
Response: The existing standards (PRC-008 & PRC-011) already require maintenance and testing of components of UFLS and UVLS protection systems, including those installed to operate distribution-level interrupting devices.		
Beaches Energy	Negative	The standard reaches further into the distribution system than we would like for UFLS and UVLS

Organization	Yes or No	Question 4 Comment
Services	Ballot	(Table 3). We have two parts to this concern. First, it will be somewhat onerous to present all the evidence of distribution class protection system maintenance and testing at audits. And second, our biggest concern is in the testing required to "exercise" a lockout or tripping relay. This may require installation of test blocks to allow such exercising of the lockout or tripping relay without tripping the distribution circuit, and such a test could be difficult to perform without impacting customer continuity of service if the lockout/tripping relay for the UFLS is the same as the lockout/tripping relay for distribution fault protection.
Response: Thank you for your comment. **First, the existing standards (PRC-008 & PRC-011) already require maintenance and testing of components of UFLS and UVLS protection systems, including those installed to operate distribution-level interrupting devices.** **Second, the UVLS and UFLS systems are included as part of the Project 2007-17 Standard Authorization Request (SAR). The SDT believes that electromechanical devices, such as auxiliary or lockout relays which contain “moving parts”, need periodic operation in order to remain reliable. As such, these devices are required to be exercised at the 12 year interval for UVLS and UFLS systems. The SDT recognizes the risk of human error trips when working with testing of lockout devices but believes these risks can be managed.**		

Organization	Yes or No	Question 4 Comment
Florida Keys Electric Cooperative Assoc.	Negative Ballot	The standard reaches further into the distribution system than we would like for UFLS and UVLS (Table 3). We have two parts to this concern. First, it will be somewhat onerous to present all the evidence of distribution class protection system maintenance and testing at audits. And second, our biggest concern is in the testing required to "exercise" a lockout or tripping relay. This may require installation of test blocks to allow such exercising of the lockout or tripping relay without tripping the distribution circuit, and such a test could be difficult to preform without impacting customer continuity of service if the lockout/tripping relay for the UFLS is the same as the lockout/tripping relay for distribution fault protection. However, most of FMPA's members have microprocessor-based relays for distribution circuits with the UFLS / UVLS embedded within the microprocessor based relay where the path from the UFLS / UVLS relay to the lockout / tripping relay is internal to the micro-processor based relay, so, testing the UFLS/UVLS relay will at the same time test the internal lockout / switching relay. However, for older electro-mechanical UFLS schemes, this type of testing could be problematic.
Response: Thank you for your comment. **First, the existing standards (PRC-008 & PRC-011) already require maintenance and testing of components of UFLS and UVLS protection systems, including those installed to operate distribution-level interrupting devices.** **Second, the UVLS and UFLS systems are included as part of the Project 2007-17 Standard Authorization Request (SAR). The SDT believes that electromechanical devices, such as auxiliary or lockout relays which contain “moving parts”, need periodic operation in order to remain reliable. As such, these devices are required to be exercised at the 12 year interval for UVLS and UFLS systems. The SDT recognizes the risk of human error trips when working with testing of lockout devices but believes these risks can be managed.**		

Organization	Yes or No	Question 4 Comment
Florida Municipal Power Agency	Negative Ballot Negative Poll	The standard reaches further into the distribution system than we would like for UFLS and UVLS (Table 3). We have two parts to this concern. First, it will be somewhat onerous to present all the evidence of distribution class protection system maintenance and testing at audits. And second, our biggest concern is in the testing required to "exercise" a lockout or tripping relay. This may require installation of test blocks to allow such exercising of the lockout or tripping relay without tripping the distribution circuit, and such a test could be difficult to preform without impacting customer continuity of service if the lockout/tripping relay for the UFLS is the same as the lockout/tripping relay for distribution fault protection. However, most of FMPA's members have microprocessor-based relays for distribution circuits with the UFLS / UVLS embedded within the microprocessor based relay where the path from the UFLS / UVLS relay to the lockout / tripping relay is internal to the micro-processor based relay, so, testing the UFLS/UVLS relay will at the same time test the internal lockout / switching relay. However, for older electro-mechanical UFLS schemes, this type of testing could be problematic. Borderline concerning whether this causes us to vote Negative or not. As a result, FMPA recommends a Negative vote with the second and third comments, emphasizing that it is the second comment that causes us to vote negative but we also would like the 3rd comment addressed. Feedback appreciated. Vote and comments are due next Wednesday, 9/28.

Response: Thank you for your comment.

First, the existing standards (PRC-008 & PRC-011) already require maintenance and testing of components of UFLS and UVLS protection systems, including those installed to operate distribution-level interrupting devices.

Second, the UVLS and UFLS systems are included as part of the Project 2007-17 Standard Authorization Request (SAR). The SDT believes that electromechanical devices, such as auxiliary or lockout relays which contain “moving parts”, need periodic operation in order to remain reliable. As such, these devices are required to be exercised at the 12 year interval for UVLS and UFLS systems. The SDT recognizes the risk of human error trips when working with testing of lockout devices but believes these risks can be managed.

Organization	Yes or No	Question 4 Comment
Florida Municipal Power Pool	Negative Ballot Negative Poll	The standard reaches further into the distribution system than we would like for UFLS and UVLS (Table 3). We have two parts to this concern. First, it will be somewhat onerous to present all the evidence of distribution class protection system maintenance and testing at audits. And second, our biggest concern is in the testing required to "exercise" a lockout or tripping relay. This may require installation of test blocks to allow such exercising of the lockout or tripping relay without tripping the distribution circuit, and such a test could be difficult to preform without impacting customer continuity of service if the lockout/tripping relay for the UFLS is the same as the lockout/tripping relay for distribution fault protection. However, most of FMPA's members have microprocessor-based relays for distribution circuits with the UFLS / UVLS embedded within the microprocessor based relay where the path from the UFLS / UVLS relay to the lockout / tripping relay is internal to the micro-processor based relay, so, testing the UFLS/UVLS relay will at the same time test the internal lockout / switching relay. However, for older electro-mechanical UFLS schemes, this type of testing could be problematic. Borderline concerning whether this causes us to vote Negative or not.
Response: Thank you for your comment. **First, the existing standards (PRC-008 & PRC-011) already require maintenance and testing of components of UFLS and UVLS protection systems, including those installed to operate distribution-level interrupting devices.** **Second, the UVLS and UFLS systems are included as part of the Project 2007-17 Standard Authorization Request (SAR). The SDT believes that electromechanical devices, such as auxiliary or lockout relays which contain “moving parts”, need periodic operation in order to remain reliable. As such, these devices are required to be exercised at the 12 year interval for UVLS and UFLS systems. The SDT recognizes the risk of human error trips when working with testing of lockout devices but believes these risks can be manageds.**		
Lincoln Electric System	Negative Ballot	Please see comments submitted in addition to the following comment. LES recommends the standard drafting team clarify the expected maintenance activities for BES related batteries that also serve UFLS systems. In particular, what would be the required maintenance activities for a battery bank serving both BES transmission elements and UFLS elements? Table 1.4 clearly

Organization	Yes or No	Question 4 Comment
		excludes UFLS elements and Table 3 indicates it only applies to "non-BES interrupting devices". As such, if a joint use battery is excluded from Table 1.4 because of its association with UFLS, BES related batteries would have no place in any of the tables.
Response: Thank you for your comment. **The SDT responded to your other comments in the sections where they were submitted.** **A battery bank serving both BES and UFLS/UVLS protection systems would be maintained per table 1-4. A battery bank that serves only distributed UFLS or UVLS system would be maintained per table 3.** **The headers of the various sections of Table 1-4 now exclude station dc supply that is used <u>only</u> for UFLS/UVLS from Table 1-4.**		
CenterPoint Energy	No	1. For the "Control circuitry between the UFLS or UVLS relays and electromechanical lockout and/or tripping auxiliary devices", the Table 3 requirement is to "Verify the path from the relay to the lockout and/or tripping auxiliary relay (including essential supervisory logic)" every 12 calendar years. CenterPoint Energy recommends this requirement be revised to "No periodic maintenance specified". CenterPoint Energy believes that wire checking a panel is a commissioning task, not a preventive maintenance task. CenterPoint Energy performs such checks on new stations and whenever expansion or modification of existing stations dictates such testing. 2. In addition, CenterPoint Energy recommends the requirement in Table 3 to "Verify that current and/or voltage signal values are provided to the protective relays" every 12 years be revised to "No periodic maintenance specified". 3. Likewise, we recommend the requirement in Table 3 to "Verify Protection System dc supply voltage" every 12 years be revised to "No periodic maintenance specified". Preventive maintenance tasks such as the three above are unnecessary for distributed UFLS and UVLS system components. The overriding performance, or "risk-based", NERC Reliability Standards for UFLS are PRC-006 and PRC-007 where an entity is required to shed their obligated firm load amount.

Organization	Yes or No	Question 4 Comment
Response: Thank you for your comment. **1. While much of the control circuitry associated with a distribution device is regularly exercised, the SDT believes that the control circuitry associated directly with UFLS/UVLS that are applied for BES reliability need be periodically verified to assure that these components will function properly when called upon to do so.** **2. The SDT believes that the voltage/current signals that support proper operation of UFLS/UVLS that are applied for BES reliability need be periodically verified to assure that these components will function properly when called upon to do so. The specific degree of this verification is constrained within Table 3 to those activities necessary to assure proper operation of the UFLS/UVLS.** 3. **The SDT believes that the station dc supply that supports only proper operation of UFLS/UVLS that are applied for BES reliability need be periodically verified to assure that these components will function properly when called upon to do so. The specific degree of this verification is constrained within Table 3 to only periodic measurement of the dc voltage.**		
BGE	No	Although BGE does not disagree with moving the distributed UFLS/UVLS maintenance activities and intervals into the new Table-3, BGE requests further clarification from the SDT on how to correctly interpret the headings and content of this table.
Response: Thank you for your support. Table 3 has been modified since it was last released for comment. Table 3 should be used to determine maintenance activities and intervals for distributed UFLS and UVLS systems. Distributed systems are further elaborated upon in the Supplementary Reference and FAQ document, Section 15.7.		
Constellation Power Generation	No	Moving the UFLS and UVLS systems from Tables 1-1 through 1-5 into a separate Table 3 is a useful improvement in illustrating the requirements. However, our objection is not really with the format, it is will the content of the Tables. From a generation perspective, the maintenance intervals and activities described in all of the Tables are too prescriptive and we are concerned that they may conflict with the existing PSMPs built by Registered Entities based on years of operational experience with the testing methods and testing frequencies that work best for the specific asset. In the worst case, the specifics dictated in the Tables may move Entities away from more stringent PSMPs that are currently in practice. For this reason, Constellation suggests that the drafting team revisit the concept of the Tables to better balance to convey useful guidance without creating a

Organization	Yes or No	Question 4 Comment
		compliance requirement that may be contrary to improved reliability. The Registered Entity should be given more flexibility to dictate how a protection system component should be tested, and at what frequency. Lastly, the technical manpower and compliance documentation demands to implement a performance based protection system maintenance program are so onerous that it is highly unlikely that any small generation entity would use it.
Response: Thank you for your comment. **FERC Order 693 and the approved SAR assign the SDT to develop a standard with maximum allowable intervals and minimum maintenance activities. The SDT believes that the intervals established within the Tables are appropriate as continent-wide maximum allowable intervals, with due consideration for any monitoring functionality that may be present. The ability to utilize performance-based maintenance is provided for those entities who wish to pursue it; it is understood that many entities may instead choose to simply implement a PSMP based on the Tables.**		
Constellation Energy Commodities Group	No	Moving the UFLS and UVLS systems from Tables 1-1 through 1-5 into a separate Table 3 is a useful improvement in illustrating the requirements. However, our objection is not really with the format, it is will the content of the Tables. From a generation perspective, the maintenance intervals and activities described in all of the Tables are too prescriptive and we are concerned that they may conflict with the existing PSMPs built by Registered Entities based on years of operational experience with the testing methods and testing frequencies that work best for the specific asset. In the worst case, the specifics dictated in the Tables may move Entities away from more stringent PSMPs that are currently in practice. For this reason, Constellation suggests that the drafting team revisit the concept of the Tables to better balance to convey useful guidance without creating a compliance requirement that may be contrary to improved reliability. The Registered Entity should be given more flexibility to dictate how a protection system component should be tested, and at what frequency. Lastly, the technical manpower and compliance documentation demands to implement a performance based protection system maintenance program are so onerous that it is highly unlikely that any small generation entity would use it.
Response: Thank you for your comment. **FERC Order 693 and the approved SAR assign the SDT to develop a standard with maximum allowable intervals and minimum**		

Organization	Yes or No	Question 4 Comment
maintenance activities. The SDT believes that the intervals established within the Tables are appropriate as continent-wide maximum allowable intervals, with due consideration for any monitoring functionality that may be present. The ability to utilize performance-based maintenance is provided for those entities who wish to pursue it; it is understood that many entities may instead choose to simply implement a PSMP based on the Tables.		
Florida Municipal Power Agency	No	We like the new Table 3, but, have remaining concerns. The standard reaches further into the distribution system than we would like for UFLS and UVLS. We have two parts to this concern. First, it will be somewhat onerous to present all the evidence of distribution class protection system maintenance and testing at audits. And second, our biggest concern is in the testing required to "exercise" a lockout or tripping relay. This may require installation of test blocks to allow such exercising of the lockout or tripping relay without tripping the distribution circuit, and such a test could be difficult to perform without impacting customer continuity of service if the lockout/tripping relay for the UFLS is the same as the lockout/tripping relay for distribution fault protection. However, most of FMPA's members have microprocessor-based relays for distribution circuits with the UFLS / UVLS embedded within the microprocessor based relay where the path from the UFLS / UVLS relay to the lockout / tripping relay is internal to the micro-processor based relay, so, testing the UFLS/UVLS relay will at the same time test the internal lockout / switching relay. However, for older electro-mechanical UFLS schemes, this type of testing could be problematic.
Response: Thank you for your comment. **First, the existing standards (PRC-008 & PRC-011) already require maintenance and testing of components of UFLS and UVLS protection systems, including those installed to operate distribution-level interrupting devices.** **Second, the UVLS and UFLS systems are included as part of the Project 2007-17 Standard Authorization Request (SAR). The SDT believes that electromechanical devices, such as auxiliary or lockout relays which contain "moving parts", need periodic operation in order to remain reliable. As such, these devices are required to be exercised at the 12 year interval for UVLS and UFLS systems. The SDT recognizes the risk of human error trips when working with testing of lockout devices but believes these risks can be managed.**		

Organization	Yes or No	Question 4 Comment
NERC Staff Technical Review	No	We agree in principle with the change; however, we have identified discrepancies among these tables with respect to the reference to UFLS and UVLS systems. The headings in Tables 1-1 through 1-4(b) and Table 1-5 refer to “Excluding distributed UFLS and UVLS”; Table 1-4(c) refers to “Excluding UFLS and non-distributed UVLS”; while Table 1-4(d) refers to “Excluding UFLS and distributed UVLS.” We believe the drafting team intended for consistency among these tables and that the intent is to exclude distributed UFLS and distributed UVLS schemes as opposed to distributed UFLS and all UVLS schemes. To make this clear we recommend changing the second line in the heading of each of these tables to “Excluding distributed UFLS and distributed UVLS.” Corresponding changes should be made in the “Component Attributes” sections of Tables 1-4(a) through 1-4(e) and to the title of Table 3.
Response: Thank you for your comment. The standard has been modified as you suggest.		
Tennessee Valley Authority	No	

5. The SDT has revised the "Supplementary Reference and FAQ" document which is supplied to provide supporting discussion for the Requirements within the standard. Do you agree with the changes? If not, please provide specific suggestions for change.

Summary Consideration: Many commenters objected to Requirement R3 and to the explanation that entities would be held to compliance on "either the Tables or their PSMP, whichever is more stringent". In response to these comments, the SDT modified the standard to remove Requirement R1 part 1.3, and revised Requirement R3 so that, for time-based programs, entities shall comply with the Tables rather than their PSMP. The SDT added Requirement R4 to address performance-based maintenance, and added Requirement R5 to address Unresolved Maintenance Issues. The Supplementary Reference and FAQ document was updated to reflect these changes.

Several commenters questioned the inclusion of the dc control circuitry for sudden pressure relays even though the relays themselves are excluded from the definition of "Protection System"; the SDT reiterated its position that this dc control circuitry is indeed included because the dc control circuitry is associated with protective functions. No change was made to the standard based on these comments.

Numerous commenters suggested minor revisions or clarifying text for the Supplementary Reference and FAQ document. These changes were generally adopted.

Organization	Yes or No	Question 5 Comment
Ameren Services	Affirmative Ballot	1. Although the explanation of 'Restore' is enlightening on page 12, 'Restore' no longer appears in the PS Maintenance definition in the last few drafts. 2. We disagree with the added burden of retaining maintenance records for removed or replaced equipment. This will actually reduce reliability because of the confusion it can cause as to what

Organization	Yes or No	Question 5 Comment
		equipment is providing BES protection. At most, only the last maintenance date of the removed or replaced component should be retained if there's really a need to prove that the interval was met regarding the BES protection. 3. Remove 'Reverse power relays' from the list on page 32. They provide thermal of the steam turbine, not electrical protection of the generator. 4. Now that FERC has approved the Project 2009-17 Interpretation, please acknowledge more directly in the Supplement that the 'transmission Protection System' that is now approved. NERC interprets "transmission Protection System," as it appears in Requirements R1 and R3 of PRC-004-1 and Requirements R1 and R2 of PRC-005-1, to mean "any Protection System that is installed for the purpose of detecting faults on transmission elements (lines, buses, transformers, etc.) identified as being included in the Bulk Electric System (BES) and trips an interrupting device that interrupts current supplied directly from the BES". 5. Please consistently state UFLS before UVLS; Table 1-4(e) differs from other parts of the standard.

Response:

1. **Thank you for your suggestion; the SDT has revised the Supplementary Reference and FAQ document to remove the "restore" reference from the definition.**
2. **The records for removed/replaced equipment need to be retained to provide documentation that you were in compliance for the entire compliance monitoring period.**
3. **The SDT agrees that for many steam units, reverse power relays provide alarm only of a condition which could result in eventual overheating of steam turbine components. However, for many combustion turbine generators, a reverse power condition can lead to imminent failure of teeth on the speed reduction gear and thus, reverse power relays on combustion turbine generators are frequently wired as a direct trip to the generator breaker to immediately remove the motoring condition. Furthermore, in the Supplementary Reference document, the preface to the list of relays to which you refer is as follows: "Examples of typical devices and systems that may directly trip the generator, or trip through a lockout relay may include but are not necessarily limited to:". The SDT was attempting to provide a list of possible relays that might need to be included. The list is not meant to be all inclusive nor do all relays of the types on the list necessarily need to be included in an**

Organization	Yes or No	Question 5 Comment
entity's PSMP. **4. The SDT believes that the Applicability as stated in PRC-005-2 is correct and that it supports the reliability of the BES. The SDT observes that the approved Interpretation addresses the term, "transmission Protection System", and notes that this term is not used within PRC-005-2; thus the interpretation does not apply to PRC-005-2. PRC-005-2 specifically addresses "Protection Systems that are installed for the purpose of detecting faults on BES Elements." Please see Section 2.3 of the Supplementary Reference and FAQ document for additional discussion.** **5. Thank you for your suggestion; the SDT has revised the standard.**		
Madison Gas and Electric Co.	Affirmative Ballot	Note that the Guidance document over states that an entity will be held accountable for have a more restrictive PMSP than the maximum intervals in attachment 1. Please review FERC Order 693, section 278 which states: "While we appreciate that many entities may perform at a higher level than that required by the Reliability Standards, and commend them for doing so, the Commission is focused on what is required under the Reliability Standards, and we do not require that they exceed the Reliability Standards".
Response: Thank you for your comment. The standard and the Supplementary Reference and FAQ document have been changed to address your concerns. Specifically, Requirement R1 part 1.3 has been removed; Requirement R3 has been revised so that, for time-based programs, entities shall comply with the tables; Requirement R4 has been added to address performance-based maintenance, and Requirement R5 has been added to address Unresolved Maintenance Issues.		
Northeast Power Coordinating Council, Inc.	Affirmative Ballot	An issue was raised here in the Northeast regarding requiring an entity to adhere to their protection system maintenance program, PSMP. If an entity has a maintenance program in place that has shorter intervals, i.e. more stringent than those in the appendix of the standard, and the entity misses completing his maintenance, the entity will be found non-compliant irrespective of the entity to demonstrate they still were within the longer intervals listed in the actual standard. NPCC would suggest that the SDT consider revising this to only result in a non-compliance assessment result if an entity missed the intervals in the appendix of the standard not those specified in their PSMP. The concern is that some entities will forego more stringent programs and revise their documents "downward" in order to ensure compliance at the potential for a reduction in reliability. There is no mechanism currently in place to preclude entities from doing this.

Organization	Yes or No	Question 5 Comment
Response: Thank you for your comment. The standard and the Supplementary Reference and FAQ document have been changed to address your concerns. Specifically, Requirement R1 part 1.3 has been removed; Requirement R3 has been revised so that, for time-based programs, entities shall comply with the tables; Requirement R4 has been added to address performance-based maintenance, and Requirement R5 has been added to address Unresolved Maintenance Issues.		
Occidental Chemical	Affirmative Ballot	The SDT has revised the "Supplementary Reference" document which is supplied to provide supporting discussion for the Requirements within the standard. Do you agree with the changes? If not, please provide specific suggestions for change. Yes. Ingleside Cogeneration LP found the Supplementary Reference document to be helpful, thorough, and technically accurate. The only suggestion we have is that demonstrated adherence to the Reference should be admissible of evidence of compliance at an audit or spot check. Today, all References have no official regulatory standing – which seems to defeat the purpose of developing them to begin with.
Response: Thank you for your comment. The document is explanatory but also illustrates the intent of the SDT. The rationale and methods explained within the Supplementary Reference and FAQ document represent the thoughts of the SDT regarding approaches to application of the standard, but may (or may not) be of use to demonstrate compliance. FERC approves standards as mandatory and enforceable; FERC does not approve reference documents.		
Occidental Chemical	Affirmative Ballot	We need to clarify the following: A transmission owner has established a maintenance cycle which is more stringent (less time between maintenance or test cycles) than the NERC Standard requires. The transmission owner fails to comply fully with the transmission owner's maintenance and testing schedule; however, the maintenance and/or testing is performed within the time frame mandated by the NERC Standard. Must the transmission owner report his failure to comply with his own maintenance/testing program even though the maintenance or testing was completed well within the time frame or interval required by the applicable NERC Standard? Must he transmission owner report such a failure of his own maintenance procedures which are more stringent than the NERC maintenance/testing standard? Will such a self report be considered a non-compliance?
Response: Thank you for your comment. The standard and the Supplementary Reference and FAQ document have been changed to address your concerns. Specifically, Requirement R1 part 1.3 has been removed; Requirement R3 has been revised so that, for		

Organization	Yes or No	Question 5 Comment
time-based programs, entities shall comply with the tables; Requirement R4 has been added to address performance-based maintenance, and Requirement R5 has been added to address Unresolved Maintenance Issues.		
Oncor Electric Delivery Company LLC	Yes	Oncor would like to see the "Supplementary Reference & FAQ" expanded to provide examples of what documentation would satisfy that the entity is compliant with initiating "resolution of any Unresolved Maintenance Issues." Also it would be helpful to all entities if the Drafting Team would expand on what, if any, tracking of the resolution of an unresolved maintenance issue is required. Oncor believes that keeping track of the initiation of "resolution of any unresolved maintenance issues" is necessary but that the standard does not currently address retention requirements related to this compliance obligation.
Response: Thank you for your comment. The measure related to this requirement has been expanded to include additional suggestions of relevant documentation. There is no tracking requirement listed for the resolution of unresolved maintenance issue, only the initiation of a resolution. The SDT recognizes that performance of the activities necessary to resolve an issue are entirely dependent upon the circumstances surrounding that issue and, consequently, will require varying amounts of resources and time to complete the process. Requiring tracking and deadlines is not within the scope of this standard. The SDT has clarified the intent of the requirement to initiate resolution of Unresolved Maintenance Issues by including it separately as Requirement R5 and revising the language such that the responsible entity must demonstrate its efforts to correct Unresolved Maintenance Issues.		
Springfield Utility Board	Yes	Because Springfield Utility Board's (SUB) current maintenance and testing program is time-based, the revised "Supplementary Reference" document does not impact SUB operations. SUB agrees with the document changes because the changes result in alternatives for entities, rather than being prescriptive.
Response: Thank you for your comment.		
Ingleside Cogeneration LP	Yes	Ingleside Cogeneration LP found the Supplementary Reference document to be helpful, thorough, and technically accurate. The only suggestion we have is that demonstrated adherence to the Reference should be admissible of evidence of compliance at an audit or spot check. Today, all References have no official regulatory standing - which seems to defeat the purpose of developing them to begin with.

Organization	Yes or No	Question 5 Comment
Response: Thank you for your comment. The document is explanatory but also illustrates the intent of the SDT. The rationale and methods explained within the Supplementary Reference and FAQ document represent the thoughts of the SDT regarding approaches to application of the standard, but may (or may not) be of use to demonstrate compliance. FERC approves standards as mandatory and enforceable; FERC does not approve reference documents.		
MidAmerican Energy Company	Yes	The changes to the "Supplementary Reference" document appear to be acceptable, but the following are suggested as changes to enhance clarity. 1. On page 9 of the Supplementary Reference and FAQ draft the following statement is included: "Relays that respond to non-electrical inputs or impulses (such as, but not limited to, vibration, pressure, seismic, thermal or gas accumulation) are not included." On page 67, the third sentence of Section 15.3 states: "It includes [referring to control circuitry] the wiring from every trip output to every trip coil." Later in that section the following is included: "...from a protective relay that are necessary for the correct operation of the protective functions." While this later statement may be interpreted to exclude circuitry associated with relays that do not respond to non-electrical inputs or impulses it would be better to make this more explicit. It would seem illogical to require testing of circuitry that is not needed for the protective functions covered by the standard. It is suggested that a sentence like the following be added to the first paragraph of Section 15.3: "Control circuitry associated with relays that respond to non-electrical inputs or impulses is not covered by this standard and need not be tested." 2. On page 31 of the Supplementary Reference it indicates that a procedure that includes intervals less than the standard could result in a noncompliance finding even if the maximum intervals in the standard are complied with. This is contrary to previous Commission rulings on what is mandatory and enforceable (i.e. only the standard itself Ref. Order 733 p105). This FAQ response should be changed to reflect those rulings.
Response: Thank you for your comment. **1. The trip path from a sudden pressure device is a part of the Protection System control circuitry. The sensing element is omitted from PRC-005-2 testing requirements because the SDT is unaware of industry recognized testing protocol for the sensing elements. The SDT believes that Protection Systems that trip (or can trip) the BES should be included. This position is**		

Organization	Yes or No	Question 5 Comment
		consistent with the currently-approved PRC-005-1, consistent with the SAR for Project 2007-17, and the SDT understands this to be consistent with the position of FERC staff. **2. The standard and the Supplementary Reference and FAQ document have been changed to address your concerns. Specifically, Requirement R1 part 1.3 has been removed; Requirement R3 has been revised so that, for time-based programs, entities shall comply with the tables; Requirement R4 has been added to address performance-based maintenance, and Requirement R5 has been added to address Unresolved Maintenance Issues.**
Ameren	Yes	1. Although the explanation of 'Restore' is enlightening on page 12, 'Restore' no longer appears in the PS Maintenance definition in the last few drafts. 2. We disagree with the added burden of retaining maintenance records for removed or replaced equipment. This will actually reduce reliability because of the confusion it can cause as to what equipment is providing BES protection. At most, only the last maintenance date of the removed or replaced component should be retained if there's really a need to prove that the interval was met regarding the BES protection. 3) Remove 'Reverse power relays' from the list on page 32. They provide thermal of the steam turbine, not electrical protection of the generator.
Response: **1. Thank you for your suggestion; the SDT has revised the Supplementary Reference and FAQ document to remove the "restore" reference from the definition.** **2. The records for removed/replaced equipment need to be retained to provide documentation that you were in compliance for the entire compliance monitoring period.** **3. The SDT agrees that for many steam units, reverse power relays provide alarm only of a condition which could result in eventual overheating of steam turbine components. However, for many combustion turbine generators, a reverse power condition can lead to imminent failure of teeth on the speed reduction gear and thus, reverse power relays on combustion turbine generators are frequently wired as a direct trip to the generator breaker to immediately remove the motoring condition. Furthermore, in the Supplementary Reference and FAQ document, the preface to the list of relays to which you refer is as follows: "Examples of typical devices and systems that may directly trip the generator, or trip through a lockout relay may include but are not**		

Organization	Yes or No	Question 5 Comment
necessarily limited to:". The SDT was attempting to provide a list of possible relays that might need to be included. The list is not meant to be all inclusive nor do all relays of the types on the list necessarily need to be included in an entity's PSMP.		
Tacoma Power	Yes	It is not clear to what extent can an entity (or auditor) can rely on information contained within the Supplementary Reference to support their position during an audit. There is a disclaimer at the beginning of the Supplementary Reference stating that "this supplementary reference to PRC-005-2 is neither mandatory nor enforceable." It seems that interpretation of the draft standard depends heavily upon this Supplementary Reference. At the same time, the Supplementary Reference does not rise to the level of a standard.
Response: Thank you for your comment. The document is explanatory but also illustrates the intent of the SDT. The rationale and methods explained within the Supplementary Reference and FAQ document represent the thoughts of the SDT regarding approaches to application of the standard, but may (or may not) be of use to demonstrate compliance. FERC approves standards as mandatory and enforceable; FERC does not approve reference documents.		
Bonneville Power Administration	Yes	
Dominion	Yes	
Entergy Services	Yes	
Independent Electricity System Operator	Yes	
City of Austin dba Austin Energy	Yes	

Organization	Yes or No	Question 5 Comment
ITC Holdings	Yes	
Dominion	Yes	
Southwest Power Pool Standards Review Group	Yes	
Pepco Holdings Inc & Affiliates	Yes	
Independent Electricity System Operator	Yes	
Northeast Utilities	Yes	
Westar Energy	Yes	
Progress Energy	Yes	
PacifiCorp	Yes	
Saft America, Inc.	Yes	
Exelon	Yes	

Organization	Yes or No	Question 5 Comment
Central Lincoln	Yes	
Dynegy Inc.	Yes	
Baltimore Gas & Electric Company	Negative Ballot	BGE's negative ballot is based on our response to Q5: While we do not disagree with the revisions to the Supplemental Reference, there remains an important item to correct. The supplementary reference on page 31, under the question beginning "Our maintenance plan calls…" states that an entity is "out of compliance" if maintenance occurs at a time longer than that specified in the entity's plan, even if that maintenance occurred at less than the maximum interval in PRC-005-2. But then on page 35-36, under the question, "How do I achieve a grace period without being out of compliance?" the response provides a presumably compliant example of scheduling maintenance at four year intervals in order to manage scheduling complexities and assure completion in less than the maximum time of six calendar years. This advice conflicts with the previous guidance. The FAQ /supplementary reference should be revised so that it does not imply that an entity is out of compliance by performing maintenance more frequently than required than the bright-line maxima in the tables. Entities may opt to test more frequently than dictated in the tables for a variety of reasons that may or may not be related to reliable protection system performance – compliance management, scheduling, operational preference, etc.
Response: The standard and the Supplementary Reference and FAQ document have been changed to address your concerns. Specifically, Requirement R1 part 1.3 has been removed; Requirement R3 has been revised so that, for time-based programs, entities shall comply with the tables; Requirement R4 has been added to address performance-based maintenance, and Requirement R5 has been added to address Unresolved Maintenance Issues.		
AEP	Negative Ballot	This negative vote is driven primarily by the concerns AEP has regarding the proposed supplementary reference documentation. If an entity adopts a more stringent maintenance program but fails to meet it, that entity could be found non-compliant despite continuing to abide by the minimum requirements of the standard itself. Entities should have the ability, if they so choose, to include additional maintenance activities or more stringent intervals than specified

Organization	Yes or No	Question 5 Comment
		within the standard without concern of penalty in the event they are unable to accomplish them. In addition, AEP is concerned by the volume of information provided in the supplementation documentation, and is uncertain how much weight that documentation might carry during audits. Note: Additional comments are being submitted via electronic form by Thad Ness on behalf of American Electric Power.
Response: Thank you for your comments. **The standard and the Supplementary Reference and FAQ document have been changed to address your concerns. Specifically, Requirement R1 part 1.3 has been removed; Requirement R3 has been revised so that, for time-based programs, entities shall comply with the tables; Requirement R4 has been added to address performance-based maintenance, and Requirement R5 has been added to address Unresolved Maintenance Issues.** **The document is explanatory but also illustrates the intent of the SDT. The rationale and methods explained within the Supplementary Reference and FAQ document represent the thoughts of the SDT regarding approaches to application of the standard, but may (or may not) be of use to demonstrate compliance. FERC approves standards as mandatory and enforceable; FERC does not approve reference documents.**		
Manitoba Hydro	Negative Ballot	Maintenance Activities Exceeding NERC Requirements In both the industry webinar discussion and the supplementary reference document, it was indicated that if an entity had more maintenance activities in its plan than the minimum required by PRC-005-2, then an entity would be audited to the "higher standard". We understand that an entity could write some flexibility in its program, as long as the NERC minimums were met. We are concerned that auditing to the "higher standard" could discourage entities from performing maintenance tasks beyond the NERC minimum criteria.
Response: Thank you for your comments. The standard and the Supplementary Reference and FAQ document have been changed to address your concerns. Specifically, Requirement R1 part 1.3 has been removed; Requirement R3 has been revised so that, for time-based programs, entities shall comply with the tables; Requirement R4 has been added to address performance-based maintenance, and Requirement R5 has been added to address Unresolved Maintenance Issues.		
PJM Interconnection,	Negative	PJM remains concerned with a position taken by the SDT related to statements found within their Supplementary Reference & FAQ as well as the manner in which Requirement R3 has been

Organization	Yes or No	Question 5 Comment
L.L.C.	Ballot Negative Poll	drafted. The SDT's position sends industry the wrong message; a message that entities should not go beyond what is in the text of the standards and that in some cases they can even be found non-compliant by merely failing to meet their own more stringent internal practice. Therefore, PJM is voting NEGATIVE at this time. The NERC reliability standards aim to ensure an Adequate Level of Reliability (ALR). If NERC's reliability standard establishes that an ALR is achieved by a maximum allowable relay maintenance period of every 6 years in a time-based Protection System Maintenance Program (PSMP), then an entity striving to complete its maintenance every 4 years should not be found non-compliant for completing it in 5 years. We have heard NERC say in CAN Webinars and NERC Workshops that "auditors must audit to the standard", however, the position taken by the SDT within their Supplementary Reference and FAQ document and the wording of Requirement R3 is contrary to this position.
Response: Thank you for your comments. The standard and the Supplementary Reference and FAQ document have been changed to address your concerns. Specifically, Requirement R1 part 1.3 has been removed; Requirement R3 has been revised so that, for time-based programs, entities shall comply with the tables; Requirement R4 has been added to address performance-based maintenance, and Requirement R5 has been added to address Unresolved Maintenance Issues.		
FirstEnergy	No	We do not agree with aspects of the Supplementary Reference document as discussed in Question 6.
Response: Thank you for your comments. Please see our response to your comments in Question 6.		
NERC Staff Technical Review	No	We recommend changes to Supplementary Reference. It appears the 3 calendar month interval referenced in the second FAQ in section 7.1 on page 20, Example 1 on page 21, Example 2 on page 22, and on page 23 should be updated to 4 calendar months consistent with the changes to the standard for verification of station dc supply voltage and inspection of electrolyte level and unintentional grounds. We recommend modifying references to UFLS and UVLS to clarify the intervals for distributed systems applies to both UFLS and UVLS similar to the recommended change to the standard in our comment on question 4. See pp. 26, 30, 33, 86, and 87 of the supplementary reference.

Organization	Yes or No	Question 5 Comment
Response: Thank you for your comment. **1. Thank you for comment; the Supplementary Reference and FAQ document has been changed.** **2. Changes have been made to the standard and its Supplementary Reference and FAQ document.**		
MRO's NERC Standards Review Forum	No	a. Page 9, "Is a Sudden Pressure Relay an auxiliary tripping relay? "1) During the webinar on Thursday, September 15th it was asked whether the trip path for a sudden pressure relay needed to be confirmed. Based on this question, we believe that the FAQ should be modified as follows:i. Is a Sudden Pressure Relay an auxiliary tripping relay? No. IEEE C37.2-2008 assigns the device number 94 to auxiliary tripping relays. Sudden pressure relays are assigned device number 63. Sudden pressure relays are excluded from the Standard because it does not utilize voltage and/or current measurements to determine anomalies. Since the sudden pressure relay is not included, it also follows that trip path testing for this relay type is also excluded. b. On page 26 of the Supplementary Reference document, it states, "If your PSMP (plan) requires more activities than you must perform and document to this higher standard." This penalizes utilities from including best practices in their PSMP, and encourages utilities to implement the standard maintenance practice instead of a higher maintenance practice. Why would a utility accept the additional risk of a NERC penalty or sanction when they can stay in compliance by accepting the minimum requirements of the standard? By stating this, the PSMP will include only those required items at the minimum frequency to avoid a compliance violation. For the reliability of the BES, recommend the wording be changed to, "If your PSMP (plan) requires more activities than required by PRC-005-2, you will be held accountable only to the minimum requirements in the standard. NERC encourages utilities to implement best practices to improve the reliability of the BES, so utilities will not be penalized for exceeding the standards." In FERC Order 693, section 278 FERC states: While we appreciate that many entities may perform at a higher level than that required by the Reliability Standards, and commend them for doing so, the Commission is focused on what is required under the Reliability Standards, we do not require that they exceed the Reliability Standards". c. Page 78, last paragraph: If the same type of ohmic testing is done (impedance, conductance or

Organization	Yes or No	Question 5 Comment
		resistance), may a different manufacturer's test equipment be used for this testing? d. Page 79, second paragraph of "Why verify voltage?": 1) "The verification of the dc supply voltage is simply an observation of battery voltage to prove that the charger has not been lost or is not malfunctioning." i. Is it the intent of the PSMT SDT that this measurement is taken at the battery terminals, or will a reading taken from the battery charger panel meter meet this requirement? 2) "The maintenance activity of verifying the float voltage of the battery charger is not to prove that a charger is lost or producing high voltages on the station dc supply, but rather to prove that the charger is properly floating the battery within the proper voltage limits." i. Is it the intent of the PSMT SDT that this measurement is taken at the battery terminals, or will a reading taken from the battery charger panel meter meet this requirement? e. Except as noted above, the changes to the "Supplementary Reference" document appear to be acceptable, but the following are suggested as changes to enhance clarity. 1) On page 9 of the Supplementary Reference and FAQ draft the following statement is included: "Relays that respond to non-electrical inputs or impulses (such as, but not limited to, vibration, pressure, seismic, thermal or gas accumulation) are not included." On page 67, the third sentence of Section 15.3 states: "It includes [referring to control circuitry] the wiring from every trip output to every trip coil." Later in that section the following is included: "...from a protective relay that are necessary for the correct operation of the protective functions." While this later statement may be interpreted to exclude circuitry associated with relays that do not respond to non-electrical inputs or impulses it would be better to make this more explicit. It would seem illogical to require testing of circuitry that is not needed for the protective functions covered by the standard. It is suggested that a sentence like the following be added to the first paragraph of Section 15.3: "Control circuitry associated with relays that respond to non-electrical inputs or impulses is not covered by this standard and need not be tested." 2) On page 31 of the Supplementary Reference it indicates that a procedure that includes intervals less than the standard could result in a noncompliance finding even if the maximum

Organization	Yes or No	Question 5 Comment
		intervals in the standard are complied with. This is contrary to previous Commission rulings on what is mandatory and enforceable (i.e. only the standard itself Ref. Order 733 p105). This FAQ response should be changed to reflect those rulings.
Response: Thank you for your comment. **1. The trip path from a sudden pressure device is a part of the Protection System control circuitry. The sensing element is omitted from PRC-005-2 testing requirements because the SDT is unaware of industry recognized testing protocol for the sensing elements. The SDT believes that Protection Systems that trip (or can trip) the BES should be included. This position is consistent with the currently-approved PRC-005-1, consistent with the SAR for Project 2007-17, and the SDT understands this to be consistent with the position of FERC staff.** **2. The standard and the Supplementary Reference and FAQ document have been changed to address your concerns. Specifically, Requirement R1 part 1.3 has been removed; Requirement R3 has been revised so that, for time-based programs, entities shall comply with the tables; Requirement R4 has been added to address performance-based maintenance, and Requirement R5 has been added to address Unresolved Maintenance Issues.** **3. Yes. Your concern, of course should be that your results can be trended from test to test. The Supplementary Reference and FAQ document has been changed.** **4. The Supplementary Reference and FAQ document has been changed to add clarity.** **5. The trip path from a sudden pressure device is a part of the Protection System control circuitry. The sensing element is omitted from PRC-005-2 testing requirements because the SDT is unaware of industry recognized testing protocol for the sensing elements. The SDT believes that Protection Systems that trip (or can trip) the BES should be included. This position is consistent with the currently-approved PRC-005-1, consistent with the SAR for Project 2007-17, and the SDT understands this to be consistent with the position of FERC staff. As to part 2, The standard and the Supplementary Reference and FAQ document have been changed to address your concerns. Specifically, R1 part 1.3 has been removed; R3 has been revised so that, for time-based programs, entities shall comply with the tables; R4 has been added to address performance-based maintenance, and R5 has been added to address Unresolved Maintenance Issues.**		
ACES Power Collaborators	No	There are some changes that are needed to the document. 1. On Page 19, the second question refers to R1.4. There is no R1.4 in the standard. We assume

Organization	Yes or No	Question 5 Comment
		that document is intended to refer to part 1.4 under R1. This needs to be clarified and corrected. 2. The reference document creates an improper incentive to eliminate best practices and utilize the maximum time intervals established in the standard. The document states that an entity will be subject to compliance violations if it has a maintenance and testing program with time intervals that are more stringent than the maximum time intervals in the standard and it does not meet its more stringent intervals. This would hold true even if the registered entity meets the maximum intervals established in the standard. To reduce compliance risk, registered entities will be incented to increase its time intervals to the maximum allowed by the standard. This is contrary to supporting reliability. Penalizing entities for failing to meet their more stringent plan requirements is also contrary to guidance provided by the Commission. Doug Curry, General Counsel of Lincoln Electric System, spoke to the Commission at the November 18, 2010 FERC technical conference on reliability monitoring, enforcement and compliance about his company's experience with the vegetation management standard. They exceeded the requirements for annual inspections by including six aerial patrols each year but were found in violation of the standard and paid penalties when they did not complete but one aerial patrol in the first five months of the year. The auditors concluded that the company's ground patrol fully satisfied the minimum requirements of the standard. In the end, LES removed the aerial inspections from the vegetation management plan. The Commissioners acknowledged that this was contrary to their goal of an adequate level of reliability and agreed that an entity should not be penalized for failing to meet their more stringent requirements when they meet the standard requirements. 3. On Page 34, the FAQ about commissioning does not appear to be consistent with CAN-0011. While we believe the reference document is more correct, the drafting team should compare the advice given in the reference document to that in the CAN to ensure that it is not conflicting. Given that NERC is in the process of revising all of the CANs, the best approach may simply be to add a statement referencing the CAN-0011 for further information. 4. Comments about "gaming the PBM system" regarding restoring segment performance should be removed from the reference document. Comments like these indicate intent by a

Organization	Yes or No	Question 5 Comment
		registered entity to manipulate the compliance process. Only after a thorough investigation can such intent be determined. Thus, there shouldn't be a presumption that registered entities will attempt this. Better comments would be to focus on the consistency that the three year period provides in determining segment performance. 5. In section 12.1 on page 58, the reference document discusses out of service equipment. NERC recently issued a lesson learned on removing unused relaying equipment on August 10, 2011. The drafting team may wish to reference that lesson learned in the reference document.
Response: Thank you for your comment. **1. The Supplementary Reference and FAQ document has been changed.** **2. The standard and the Supplementary Reference and FAQ document have been changed to address your concerns. Specifically, Requirement R1 part 1.3 has been removed; Requirement R3 has been revised so that, for time-based programs, entities shall comply with the tables; Requirement R4 has been added to address performance-based maintenance, and Requirement R5 has been added to address Unresolved Maintenance Issues.** **3. The Supplementary Reference and FAQ document has been changed.** **4. The Supplementary Reference and FAQ document has been changed.** **5. The Supplementary Reference and FAQ document has been changed to incorporate a discussion of the cited Lessons Learned.**		
Southern Company Generation	No	Several additional edits are needed so that the document matches the proposed standard: 1) In Section 5.1.1, page 16, add "and Table 3" in the Figure and at the end of FAQ after figure in that section. 2) In Section 7.1, example #1, a 3 month battery interval is shown 3) In Section 8.1.1, a 3 month interval is shown for communication circuit 4) In Section 15.5.1, several references to "3 month" and "three month" intervals are shown for communication circuits. 5) In Appendix B, the formatting is incorrect for Al McMeekin's company name.

Organization	Yes or No	Question 5 Comment
Response: Thank you for your comment. The Supplementary Reference and FAQ document has been changed to address each of your suggestions.		
Nebraska Public Power District	No	a. On page 26 of the Supplementary Reference document, it states, "If your PSMP (plan) requires more activities than you must perform and document to this higher standard." This penalizes utilities from including best practices in their PSMP, and encourages utilities to implement the standard maintenance practice instead of a higher maintenance practice. Why would a utility accept the additional risk of a NERC penalty or sanction when they can stay in compliance by accepting the minimum requirements of the standard? By stating this, the PSMP will include only those required items at the minimum frequency to avoid a compliance violation. For the reliability of the BES, recommend the wording be changed to, "If your PSMP (plan) requires more activities than required by PRC-005-2, you will be held accountable only to the minimum requirements in the standard. NERC encourages utilities to implement best practices to improve the reliability of the BES, so utilities will not be penalized for exceeding the standards." In FERC Order 693, section 278 FERC states: While we appreciate that many entities may perform at a higher level than that required by the Reliability Standards, and commend them for doing so, the Commission is focused on what is required under the Reliability Standards, we do not require that they exceed the Reliability Standards".
Response: The standard and the Supplementary Reference and FAQ document have been changed to address your concerns. Specifically, Requirement R1 part 1.3 has been removed; Requirement R3 has been revised so that, for time-based programs, entities shall comply with the tables; Requirement R4 has been added to address performance-based maintenance, and Requirement R5 has been added to address Unresolved Maintenance Issues.		
American Electric Power	No	With such a complex standard as this, the FAQ and Supplementary Reference documents do aid the Protection System owner in demystifying the requirements. However, AEP is uncertain how much weight the documents might carry during audits. We recommend that this additional information be included within the actual standard (for example in an appendix) but in a more compact version. Section 15.7 of the supplementary reference includes the bullet point "No verification of trip path

Organization	Yes or No	Question 5 Comment
		required between the lock-out and/or auxiliary tripping device(s).” This appears to contradict the other bullet points within Section 15.7.
Response: Thank you for your comment. **1. Doing as you suggest would make the supporting information within the Supplementary Reference and FAQ document part of the standard and this would add extensive and unnecessary prescription to the standard.** **2. The Supplementary Reference and FAQ document has been changed.**		
Lincoln Electric System	No	Please see the comments submitted by the MRO NSRF.
Response: Please see our response to the comments submitted by the MRO NSRF.		
Liberty Electric Power LLC	No	The reference contains language which makes it a violation should an entity choose a cycle time less than the maximum from the table, and then fails to meet that cycle. (See page 27, "If your PSMP (plan) requires activities more often than the Tables maximum then you must perform and document those activities to your more stringent standard.") There is no reason to hold a RE in violation if all work is performed within the maximum time from the table - either there was no reliability risk, or the table is incorrect and a reliability risk in itself.
Response: The standard and the Supplementary Reference and FAQ document have been changed to address your concerns. Specifically, Requirement R1 part 1.3 has been removed; Requirement R3 has been revised so that, for time-based programs, entities shall comply with the tables; Requirement R4 has been added to address performance-based maintenance, and Requirement R5 has been added to address Unresolved Maintenance Issues.		
Manitoba Hydro	No	1. Page 26: In both the industry webinar discussion and the supplementary reference document, it was indicated that if an entity had more maintenance activities in its plan than the minimum required by PRC-005-2, then an entity would be audited to the "higher standard". We understand that an entity could write some flexibility in its program, as long as the NERC minimums were met. We are concerned that auditing to the "higher standard" could

Organization	Yes or No	Question 5 Comment
		discourage entities from performing maintenance tasks beyond the NERC minimum criteria. 2. The discussion on page 9 indicates that although the relays which respond to mechanical parameters are not included in the scope of PRC-005-2, the associated trip circuits are included. We suggest that neither the relays which respond to mechanical parameters nor their associated trip circuits are within the scope of this standard 3. References to the tables should be consistently updated to include the new Table 3. "Every 3 calendar months" should be updated throughout the document to "Every 4 calendar months". For example, Page 23: Example #3 should be revised. 4. In addition, there are a number of grammatical errors in the document, particularly capitalization and punctuation, which make it difficult to read. There are terms which are improperly capitalized implying that they are approved NERC Glossary of Terms definitions when they are not.
Response Thank you for your comment. **1. The standard and the Supplementary Reference and FAQ document have been changed to address your concerns. Specifically, Requirement R1 part 1.3 has been removed; Requirement R3 has been revised so that, for time-based programs, entities shall comply with the tables; Requirement R4 has been added to address performance-based maintenance, and Requirement R5 has been added to address Unresolved Maintenance Issues.** **2. The trip path from a sudden pressure device is a part of the Protection System control circuitry. The sensing element is omitted from PRC-005-2 testing requirements because the SDT is unaware of industry recognized testing protocol for the sensing elements. The SDT believes that Protection Systems that trip (or can trip) the BES should be included. This position is consistent with the currently-approved PRC-005-1, consistent with the SAR for Project 2007-17, and the SDT understands this to be consistent with the position of FERC staff.** **3. The Supplementary Reference and FAQ document has been changed.** **4. The Supplementary Reference and FAQ document has had identified errors corrected.**		
American Transmission	No	ATC provides the following suggestions for change:

Organization	Yes or No	Question 5 Comment
Company		1. Page 9, "Is a Sudden Pressure Relay an auxiliary tripping relay? "During the webinar on Thursday, September 15th it was asked whether the trip path for a sudden pressure relay needed to be confirmed. Based on this question, we believe that the FAQ should be modified as follows: Is a Sudden Pressure Relay an auxiliary tripping relay?No. IEEE C37.2-2008 assigns the device number 94 to auxiliary tripping relays. Sudden pressure relays are assigned device number 63. Sudden pressure relays are excluded from the Standard because it does not utilize voltage and/or current measurements to determine anomalies. Since the sudden pressure relay is not included, it also follows that trip path testing for this relay type is also excluded. 2. Page 78, last paragraph:If the same type of ohmic testing is done (impedance, conductance or resistance), modify the FAQ to allow the use of a different manufacturer's test equipment to conduct the testing. 3. Page 80, second paragraph: "The verification of the dc supply voltage is simply an observation of battery voltage to prove that the charger has not been lost or is not malfunctioning." Insert the following: "A reading taken from the battery charger panel meter will meet this requirement." "The maintenance activity of verifying the float voltage of the battery charger is not to prove that a charger is lost or producing high voltages on the station dc supply, but rather to prove that the charger is properly floating the battery within the proper voltage limits." Insert the following." A reading taken from the battery charger panel meter will meet this requirement."

Response: Thank you for your comments.

1. **The trip path from a sudden pressure device is a part of the Protection System control circuitry. The sensing element is omitted from PRC-005-2 testing requirements because the SDT is unaware of industry recognized testing protocol for the sensing elements. The SDT believes that Protection Systems that trip (or can trip) the BES should be included. This position is consistent with the currently-approved PRC-005-1, consistent with the SAR for Project 2007-17, and the SDT understands this to be consistent with the position of FERC staff.**
2. **In the Supplementary Reference and FAQ document, the SDT is discussing methods of performing ohmic testing but is not specifying any particular test or test equipment.**
3. **The Supplementary Reference and FAQ document has been changed.**

Organization	Yes or No	Question 5 Comment
Southern Company Transmission	No	1. Page 16: 'Add and Table 3' in Figure and end of FAQ after figure 2. Page 20: change reference from 3 to 4 months. This applies throughout document.
Response: Thank you for your comments. **1. The Supplementary Reference and FAQ document has been changed.** **2. The Supplementary Reference and FAQ document has been changed.**		
CenterPoint Energy	No	CenterPoint Energy appreciates that there is now only one document, instead of the two originally proposed. However, we question the name of the document which shows "Supplemental Reference and FAQ". The use of "Supplemental Reference" could infer it contains requirements not found in the PRC-005-2 standard. Also, we suggest that NERC standardize on the names of documents associated with standards and other NERC initiatives. CenterPoint Energy recommends the name of the document be "Technical Reference".
Response: Thank you for your comment. The Supplementary Reference and FAQ document is explanatory in nature.		
BGE	No	While we do not disagree with the revisions to the Supplemental Reference, there remains an important item to correct. The supplementary reference on page 31, under the question beginning "Our maintenance plan calls..." states that an entity is "out of compliance" if maintenance occurs at a time longer than that specified in the entity's plan, even if that maintenance occurred at less than the maximum interval in PRC-005-2. But then on page 35-36, under the question, "How do I achieve a grace period without being out of compliance?" the response provides a presumably compliant example of scheduling maintenance at four year intervals in order to manage scheduling complexities and assure completion in less than the maximum time of six calendar years. This advice conflicts with the previous guidance. The FAQ /supplementary reference should be revised so that it does not imply that an entity is out-of-compliance by performing maintenance more frequently than required than the bright-line maxima in the tables. Entities may opt to test more frequently than dictated in the tables for a variety of reasons that may or may not be related to reliable protection system performance - compliance management, scheduling, operational

Organization	Yes or No	Question 5 Comment
		preference, etc.
Response: The standard and the Supplementary Reference and FAQ document have been changed to address your concerns. Specifically, Requirement R1 part 1.3 has been removed; Requirement R3 has been revised so that, for time-based programs, entities shall comply with the tables; Requirement R4 has been added to address performance-based maintenance, and Requirement R5 has been added to address Unresolved Maintenance Issues.		
Constellation Power Generation	No	While we do not disagree with the revisions to the Supplemental Reference, there remains an important item to correct. The supplementary reference on page 31, under the question beginning "Our maintenance plan calls..." states that an entity is "out of compliance" if maintenance occurs at a time longer than that specified in the entity's plan, even if that maintenance occurred at less than the maximum interval in PRC-005-2. But then on page 35-36, under the question, "How do I achieve a grace period without being out of compliance?" the response provides a presumably compliant example of scheduling maintenance at four year intervals in order to manage scheduling complexities and assure completion in less than the maximum time of six calendar years. This advice conflicts with the previous guidance. The FAQ /supplementary reference should be revised so that it does not imply that an entity is out-of-compliance by performing maintenance more frequently than required than the bright-line maxima in the tables. Entities may opt to test more frequently than dictated in the tables for a variety of reasons that may or may not be related to reliable protection system performance - compliance management, scheduling, operational preference, etc. The discussion of "grace period" may be best clarified as a term to include in an entity's PSMP that grants entities the flexibility to maintain compliance if testing occurs between an entity's plan interval and the bright-line interval.
Response: The standard and the Supplementary Reference and FAQ document have been changed to address your concerns. Specifically, Requirement R1 part 1.3 has been removed; Requirement R3 has been revised so that, for time-based programs, entities shall comply with the tables; Requirement R4 has been added to address performance-based maintenance, and Requirement R5 has been added to address Unresolved Maintenance Issues.		
Constellation Energy	No	While we do not disagree with the revisions to the Supplemental Reference, there remains an important item to correct. The supplementary reference on page 31, under the question beginning

Organization	Yes or No	Question 5 Comment
Commodities Group		"Our maintenance plan calls..." states that an entity is "out of compliance" if maintenance occurs at a time longer than that specified in the entity's plan, even if that maintenance occurred at less than the maximum interval in PRC-005-2. But then on page 35-36, under the question, "How do I achieve a grace period without being out of compliance?" the response provides a presumably compliant example of scheduling maintenance at four year intervals in order to manage scheduling complexities and assure completion in less than the maximum time of six calendar years. This advice conflicts with the previous guidance. The FAQ /supplementary reference should be revised so that it does not imply that an entity is out-of-compliance by performing maintenance more frequently than required than the bright-line maxima in the tables. Entities may opt to test more frequently than dictated in the tables for a variety of reasons that may or may not be related to reliable protection system performance - compliance management, scheduling, operational preference, etc. The discussion of "grace period" may be best clarified as a term to include in an entity's PSMP that grants entities the flexibility to maintain compliance if testing occurs between an entity's plan interval and the bright-line interval.
Response: The standard and the Supplementary Reference and FAQ document have been changed to address your concerns. Specifically, Requirement R1 part 1.3 has been removed; Requirement R3 has been revised so that, for time-based programs, entities shall comply with the tables; Requirement R4 has been added to address performance-based maintenance, and Requirement R5 has been added to address Unresolved Maintenance Issues.		
Western Area Power Administration	No	See comments under question 6
Response: Please see our response to your comments in Question 6.		
Tennessee Valley Authority	No	

6. **If you have any other comments on this Standard that you have not already provided in response to the prior questions, please provide them in the comment section.**

Summary Consideration:

Many commenters objected to Requirement R3 and to the explanation that entities would be held to compliance on "either the Tables or their PSMP, whichever is more stringent". In response to these comments, the SDT modified the standard to remove Requirement R1 part 1.3, and revised Requirement R3 so that, for time-based programs, entities shall comply with the Tables rather than their PSMP. The SDT added Requirement R4 to address performance-based maintenance, and added Requirement R5 to address Unresolved Maintenance Issues. The Supplementary Reference and FAQ document was updated to reflect these changes.

Several commenters questioned the inclusion of the dc control circuitry for sudden pressure relays even though the relays themselves are excluded from the definition of "Protection System"; the SDT reiterated its position that this dc control circuitry is indeed included because the dc control circuitry is associated with protective functions.

Several comments were offered objecting that the VSLs establish that any non-compliance is a violation, and that "perfection is unrealistic". The SDT responded that the VSL Guidelines do not provide for an entity to be out of performance to some degree without incurring a violation.

Several comments were offered regarding "Unresolved Maintenance Issues". Some of these comments suggested that the entity should be required to resolve such issues, rather than initiating resolution. Others offered concerns regarding the definition of this term itself or the related VSLs. The SDT revised the definition to: "A deficiency identified during a maintenance activity that causes the component to not meet the intended performance, and requires follow-up corrective action." The VSLs for the old Requirement R3 (new Requirement R5) were revised from graduated "%" to graduated "hard counts" of violations. The SDT also clarified the intent of the requirement to initiate resolution of Unresolved Maintenance Issues by including it separately as Requirement R5 and revising the language such that the responsible entity must demonstrate its efforts to correct Unresolved Maintenance Issues.

Other comments were offered regarding Data Retention, generally objecting to retaining the maintenance records for two full intervals. The SDT explained that this expectation is consistent with the Compliance Monitoring and Enforcement Program.

Several commenters questioned the verification of lockout and auxiliary relays every 6 years. The SDT explained their rationale for this requirement relative to lockout relays, and did move the auxiliary relays to the 12-year control circuitry verification.

Several comments were offered on the Implementation plan, resulting in several clarifying changes.

Many comments were offered, questioning the Applicability of the standard relative to the recently-approved Interpretation of "transmission Protection System". The SDT explained that PRC-005-2 does not use this term; thus the interpretation does not apply. The SDT also explained that the Applicability in PRC-005 is correct and that it supports the reliability of the BES.

In response to comments, the SDT revised Applicability 4.2.5.4 to indicate that, for generator-connected station service transformers, only the Protection Systems that trip the generator, either directly or via a lockout relay are included in the standard.

In response to comments, Table 1-4(f) was modified to more accurately represent the monitoring attributes and related activities for monitored Vented Lead-Acid and Valve-Regulated Lead-Acid batteries.

Organization	Yes or No	Question 6 Comment
City of Austin dba Austin Energy	Affirmative Ballot	(1) The following language should be clarified to make it clear that a Registered Entity does not have to include its detailed maintenance procedures in its PSMP: 1.4. Include all applicable monitoring attributes and related maintenance activities applied to each Protection System component type consistent with the maintenance intervals specified in Tables 1-1 through 1-5, Table 2, and Table 3.
	Affirmative Poll	(2) For a modern digital relay panel, designed with monitored components and electromechanical lockouts, the maintenance interval would otherwise be a maximum of 12 years except that the lockout must be electrically operated every 6 years. We cannot see justification for a separate maintenance activity to just test the lockouts, due to the increased human error associated with testing lockouts and the low likelihood of a lockout failure. We recommend that the lockouts be tested on a 12 year basis, perhaps in association with the "Unmonitored control circuitry associated with protective functions" as found in Table 1-5. By doing so, we feel that the risk of an undesired operation due to human error can be minimized and not degrade system reliability.
		(3) If sudden pressure relays are exempt from the Standard, the DC circuitry for those relays should also be exempt.
		(4) If a Registered Entity has a PSMP that is more stringent than the intervals in PRC-005-2, the Registered Entity should not be considered out of compliance if it fails to meet its internal interval but remains within the interval set forth in PRC-005-2.

Response: Thank you for your comments.

1. **The SDT's intent with the R1.4 wording is to convey that the entity's PSMP must document that the monitoring attributes of any given component type meet the Table-specified monitoring attributes in order to justify exclusion of the maintenance activities and/or the lengthening of maintenance intervals as provided for in the Tables. PRC-005-2 does not have requirements for inclusion of detailed maintenance procedures in an entity's PSMP as the tables within the standard have taken the place of the "summary of maintenance and testing procedures" required by R1.2 of PRC-005-1.**
2. **The SDT believes that electromechanical lockout relays need periodic operation in order to remain reliable. As such, these devices are required to be exercised at the same 6 year interval required for electromechanical relays. The SDT recognizes the risk of human error trips when working with testing of lockout devices but believes these risks can be managed. Performance-based maintenance is an option if you want to extend your intervals beyond 6 years. The SDT, however, has modified Table 1-5 to remove other auxiliary relays, etc, from this activity, and clarified that the verification of such devices is included within the 12-year unmonitored control circuitry verification.**
3. **The trip path from a sudden pressure device is a part of the Protection System control circuitry. The sensing element is omitted from PRC-005-2 testing requirements because the SDT is unaware of industry recognized testing protocol for the sensing elements. The SDT believes that Protection Systems that trip (or can trip) the BES should be included. This position is consistent with the currently-approved PRC-005-1, consistent with the SAR for Project 2007-17, and the SDT understands this to be consistent with the position of FERC staff.**
4. **The standard and the Supplementary Reference and FAQ document have been changed to address your concerns. Specifically, Requirement R1 part 1.3 has been removed; Requirement R3 has been revised so that, for time-based programs, entities shall comply with the tables; Requirement R4 has been added to address performance-based maintenance, and Requirement R5 has been added to address Unresolved Maintenance Issues.**

City of Tacoma, Department of Public Utilities, Light Division, dba Tacoma Power	Affirmative Ballot	1. The implementation plan for R2 and R3 is unclear on whether each maintenance activity has its own implementation schedule. The implementation plan can also be interpreted to mean that the implementation schedule for a given protection system component is driven by the smallest maximum maintenance (allowable) interval. For example, for unmonitored communications systems, it is unclear whether all maintenance activities indicated in Table 1-2, including those corresponding to 6 calendar years, must be completed on all unmonitored communications systems by the first calendar quarter 15 months following applicable regulatory approval, or if this timeline only applies to the maintenance activity specified in Table 1-2 corresponding to a maximum maintenance interval of 4 calendar months.
		2. Assuming that there is a different implementation schedule for different maintenance activities for some protection system component types (namely station DC supply and communication systems), the middle bullet on page 1 of the implementation plan does not seem to consider that it may not be possible to identify whether some protection system components are completely being addressed by PRC-005-2 or the Program developed for the previous standards. In other words, during implementation, some maintenance activities for the same protection system component may be addressed by PRC-005-2, while other maintenance activities may be addressed by the Program developed for the previous standards.
		3. It is unclear whether control circuitry (trip paths) from protective relays that respond to mechanical quantities is included. This issue is addressed in the supplementary reference but is vague in the draft standard itself.
		4. This draft of PRC-005-2 requires the Protection System Maintenance Program (PSMP) to “include all applicable monitoring attributes and related maintenance activities” per the Tables and requires an entity to “implement and follow its PSMP.” Under the draft standard, it is unclear whether an entity has to document in the PSMP and/or maintenance records how they accomplish(ed) the maintenance activities or simply to indicate that the maintenance activities are included and have been completed within the defined intervals. It is clear that entities are afforded some latitude in how they conduct the required maintenance activities. However, the level of detail required to document (1) how an entity chooses to perform the maintenance activities and (2) that applicable maintenance activities have been completed is not clear.

		5. In Table 1-2, there is a maintenance activity related to communication systems to “verify essential signals to and from other Protection System components.” It is unclear if this statement is referring to control circuitry associated with the communication system end devices, end device input and output operation (as in Table 1-1 for protective relays), or something else. It is recommended that the requirement be to “verify operation of communication system inputs and outputs that are essential to proper functioning of the Protection System.” This language is consistent with that used for protective relays in Table 1-1.
		6. Referring to Table 1-2, it is unclear whether an entity has the sole authority decide which ‘performance criteria’ are ‘pertinent.’ Additionally, it is unclear if an entity must document the ‘communications technology applied’ and the associated ‘performance criteria’ in its PSMP.
		7. In Table 1-4, it is unclear if there is a distinction between the terms ‘resistance’ and ‘ohmic values.’ If there is a distinction, then this distinction should be clarified.
		8. In Table 1-4, it is unclear if there is a distinction between the terms ‘battery terminal connection resistance’ and ‘unit-to-unit connection resistance.’ If there is a distinction, then this distinction should be clarified.
		9. In Table 1-4, replace the term ‘resistance’ with ‘impedance.’
		10. Recommend that the 6 calendar month interval in Table 1-4(b) be lengthened to 18 calendar months to be more consistent with similar maintenance activities for other battery types. At minimum, lengthen the interval to at least 7 calendar months in a similar way that 3 calendar months was lengthened to 4 calendar months for other maintenance activities.

		11. Referring to Table 1-5, no periodic maintenance is required for “control circuitry whose continuity and energization or ability to operate are monitored and alarmed.” It is unclear whether or not it is acceptable to verify DC voltage at the actuating device trip terminals at least once every 12 calendar years for “unmonitored control circuitry associated with protective functions.” It is recommended that periodically verifying DC voltage in this manner be an acceptable means of accomplishing the maintenance activity identified in Table 1-5 for unmonitored control circuitry associated with protective functions.
		12. Referring to 4.2. Facilities of the draft standard, it is unclear whether protection systems for transformers that step down from over 100kV to below 15kV are applicable to the standard. Even if there are normally-open distribution feeder ties for purposes of transferring load in a make-before-break fashion, these transformers are generally not considered BES elements.
		13. Referring to 4.2.5 of the draft standard, it is unclear whether protection for generator excitation systems are applicable to the standard.
		14. It is unclear whether external timing relays (e.g., Zone 2) are considered control circuitry components (like lockout and auxiliary relays) or protective relay components.
Response:	**Thank you for your comments.**	
	1. The SDT agrees with your observation and has changed the relevant parts of the implementation plan to clarify that they apply to the maintenance activities for the relevant maintenance intervals.	
	2. The SDT agrees with your observation and has revised the Implementation plan to clarify.	

	3. The trip paths from protective relays that respond to mechanical quantities and are intended to detect faults are a part of the Protection System control circuitry. The sensing elements are omitted from PRC-005-2 testing requirements because the SDT is unaware of industry recognized testing protocols for these sensing elements. The SDT believes that Protection Systems that trip (or can trip) the BES should be included. This position is consistent with the currently-approved PRC-005-1, consistent with the SAR for Project 2007-17, and the SDT understands this to be consistent with the position of FERC staff. Note that trip signals from devices sensing mechanical parameters not directly indicative of an electrical fault need not be tested per this standard.
	4. The SDT has removed parts 1.1 and 1.3 from Requirement R1, addressing part of your comment. The SDT agrees that PRC-005-2 allows some leeway in how an entity fulfills the testing requirements of the standard. Section 15 of the Supplementary Reference and FAQ document provides numerous examples of possible testing techniques for the various component types making up a Protection System. An entity's PSMP should clearly define how the testing requirements of the standard are fulfilled. The Measures for each requirement, as well as Section 15.8 of the Supplementary Reference and FAQ document, provide some examples of possible compliance documentation for completion of testing.
	5. The SDT agrees with your suggestion and has changed the standard accordingly.
	6. The entity has the authority to establish its own acceptable performance criteria. This criteria does not need to be in the PSMP, but should reside somewhere within the maintenance documentation.
	7. As utilized on Table 1-4, the term "ohmic value" is a generic reference to the measurement of a battery cell or units ability to pass current flow. This may be done using conductance, resistance or impedance measurements; the various battery test equipment manufacturers use different measurement methods and the term "ohmic value" is meant to be technology neutral. See FAQ on page 78 of the Supplementary Reference and FAQ document. The term "resistance" as used in Table 1-4 refers specifically to the dc resistance of the battery terminal connections and the battery intercell/inter-unit physical connectors. See related FAQ on pages 74-75 of the Supplementary Reference and FAQ document.

	8. Battery terminal connection resistance is a measurement of the resistance of a connection at a battery terminal. Battery intercell or unit-to-unit connection resistance is a measurement of the resistance of the external conductor interconnecting two adjacent battery cells or two adjacent multi-cell battery units. The SDT believes these are common battery maintenance terms used throughout the industry.
	9. The SDT disagrees and believes that resistance as used in Table 1-4 is the appropriate term for the parameters to be measured and is consistent with standard battery system maintenance terminology.
	10. The SDT disagrees with your recommendation to standardize maintenance intervals between different battery types that have distinctly different failure mechanisms. See related FAQ on pages 80-81 of the Supplementary Reference and FAQ document for further discussion of requirements for ohmic measurements of VRLA batteries. Concerning your recommendation to allow for 7 calendar months, the SDT believes that the six-month interval specified is appropriate.
	11. The SDT has modified this specific portion of the Table, and believes that the modifications address your concern. Please see Section 15.3 of the Supplementary Reference and FAQ document for a discussion of this topic.
	12. The standard does not include the Protection Systems for transformers that step down from over 100kV to below 15kV if these transformers are not BES elements. If Protection Systems are installed for purposes of detecting Faults on BES elements, these Protection Systems are included.
	13. Paragraph 4.2.5.1 indicates that the excitation system protection system would only be in scope if the excitation system generates signals that trip the generator output breaker either directly or via lockout or auxiliary tripping relays.
	14. As timing is critical to proper Protection System function, timers are considered protective relays.

Ameren Services	Affirmative Ballot	Measure M3 on page 5 should only apply to 99.5% of the components. Please revise to state: "Each … shall have evidence that it has implemented the Protection System Maintenance Program for 99.5% of its components and initiated…." PRC-005-2 unrealistically mandates perfection without providing technical justification. A basic premise of engineering is to allow for reasonable tolerances, even Six Sigma allows for defects. Requiring perfection may well harm reliability by distracting valuable resources from higher priority duties concerning the Protection System. We are not asking for the VSL to be changed. No one is perfect and it is impractical to imply perfection is achievable. The consequence of a very small number of components having a missed or late maintenance activity is insignificant to BES reliability. Our proposed reasonable tolerance sets an appropriate level of performance expectation. We disagree with the notion that this is "non-performance". An alternate approach regarding the unrealistic perfection of M3 is to correctly recognize that the protection of the primary BES is the objective. Most Protection Systems are redundant by design and the entity needs to be afforded the opportunity to show that a redundant component met the PSMP thereby providing the required protection. The entity should be allowed a reasonable time frame of one calendar increment to maintain the component in question. Our concern stems from the tens of thousands of components in a PSMP, and the reality that rarely but occasionally a data base error or outage scheduling issue may result in a very small number component exceeding their maximum interval. As long as the entity can show that BES protection was sustained and maintains the component quickly (e.g. within one calendar month of discovery), BES reliability has been maintained.
Response: Thank you for comment. **The NERC criteria for VSLs do not currently permit them to allow some level of non-performance without being in violation. The graded approach of the VSL for Requirement R3 allows the RRO to provide discretion when assessing severity of the violation when only a relatively small number of maintenance activities have been missed.**		

City of Austin dba Austin Energy	Affirmative Ballot	1. The following language should be clarified to make it clear that a Registered Entity does not have to include its detailed maintenance procedures in its PSMP: "all applicable monitoring attributes and related maintenance activities ". Reference: R1.4. Include all applicable monitoring attributes and related maintenance activities applied to each Protection System component type consistent with the maintenance intervals specified in Tables 1-1 through 1-5, Table 2, and Table 3. 2. For a modern digital relay panel, designed with monitored components and electromechanical lockouts, the maintenance interval would otherwise be a maximum of 12 years except that the lockout must be electrically operated every 6 years. We cannot see justification for a separate maintenance activity to just test the lockouts, due to the increased human error associated with testing lockouts and the low likelihood of a lockout failure. We recommend that the lockouts be tested on a 12 year basis, perhaps in association with the "Unmonitored control circuitry associated with protective functions" as found in Table 1-5. By doing so, we feel that the risk of an undesired operation due to human error can be minimized and not degrade system reliability. 3. If sudden pressure relays are exempt from the Standard, the DC circuitry for those relays should also be exempt.

Response: Thank you for your comments.

1. **The SDT's intent with the Requirement R1.4 (new Requirement R1.2) wording is to convey that the entity's PSMP must document that the monitoring attributes of any given component type meet the Table-specified monitoring attributes in order to justify exclusion of the maintenance activities and/or the lengthening of maintenance intervals as provided for in the Tables. PRC-005-2 does not have requirements for inclusion of detailed maintenance procedures in an entity's PSMP as the tables within the standard have taken the place of the "summary of maintenance and testing procedures" required by R1.2 of PRC-005-1.**
2. **The SDT believes that electromechanical lockout relays need periodic operation in order to remain reliable. As such, these devices are required to be exercised at the same 6 year interval required for electromechanical relays. The SDT recognizes the risk of human error trips when working with testing of lockout devices but believes these risks can be managed. Performance-based maintenance is an option if you want to extend your intervals beyond 6 years. The SDT, however, has modified Table 1-5 to remove other auxiliary relays, etc, from this activity, and clarified that the verification of such devices is included within the 12-year unmonitored control circuitry verification.**
3. **The trip path from a sudden pressure device is a part of the Protection System control circuitry. The sensing element is**

omitted from PRC-005-2 testing requirements because the SDT is unaware of industry recognized testing protocol for the sensing elements. The SDT believes that Protection Systems that trip (or can trip) the BES should be included. This position is consistent with the currently-approved PRC-005-1, consistent with the SAR for Project 2007-17, and the SDT understands this to be consistent with the position of FERC staff.		
International Transmission Company Holdings Corp	Affirmative Ballot	While voting "Affirmative" on this ballot, ITC continues to have concerns with testing intervals. These comments have been submitted via the Comment Form associated with this project.
Response: Thank you for your affirmative vote. Please see our responses to our comments elsewhere in this report.		
Occidental Chemical	Affirmative Ballot	If you have any other comments on this Standard that you have not already provided in response to the prior questions, please provide them here. Ingleside Cogeneration, LP, continues to believe that the six year requirement to verify channel performance on associated communications equipment will prove to be more detrimental than beneficial on older relays. Clearly newer technology relays which provide read-outs of signal level or data-error rates will easily verified, but the tools which measure power levels and error rates on non-monitored communication links are far more intrusive. After the technician uncouples and re-attaches a fiber optic connection, the communications channel may be left in worse shape after verification than it was prior to the start of the test.
Response: Thank you for your comment and affirmative vote. **There are less intrusive ways to verify channel performance that do not require disconnecting communication terminations. It is up to the entity to determine specific maintenance techniques.**		

Oncor Electric Delivery	Affirmative Ballot	PRC-005-2 is a vast improvement over the vagueness of the existing standard (PRC-005-1), that the new standard makes compliance much easier than the present standard. The new standard recognizes the advances in relay technology and reliability, particularly the benefits of microprocessor based relays. The standard also provides greater flexibility on its implementation while recognizing the benefits of a performance based methodology, particularly as it relates to battery testing. The revised standard eliminates the requirement for a "summary of maintenance and testing procedures" which was vague and provided no real value to the registered entities. Operational and administrative efficiencies can be realized by consolidating the relay testing and maintenance requirements into one standard (PRC-005-1, PRC-008-0, PRC-011-0, PRC-017-0)
Response: Thank you for your comment and affirmative vote.		
Public Utility District No. 2 of Grant County	Affirmative Ballot	We are ok with this standard, however, we would like to see some recognition of the use of non-calendar based maintenance practices such as predictive maintenance practices or condition based maintenance practices. When you use one of those methodologies for the basis for your plant maintenance it is very labor intensive to interpret those results to a calendar based requirement.
Response: Thank you for your comment and affirmative vote. **Please see Sections 5, 6, and 7 of the Supplementary Reference and FAQ for a discussion of how the SDT has attempted to incorporate condition-based maintenance practices (utilizing installed monitoring capabilities) and performance-based maintenance practices within PRC-005-2.**		
Tacoma Public Utilities	Affirmative Ballot	1. The implementation plan for R2 and R3 is unclear on whether each maintenance activity has its own implementation schedule. The implementation plan can also be interpreted to mean that the implementation schedule for a given protection system component is driven by the smallest maximum maintenance (allowable) interval. For example, for unmonitored communications systems, it is unclear whether all maintenance activities indicated in Table 1-2, including those corresponding to 6 calendar years, must be completed on all unmonitored communications systems by the first calendar quarter 15 months following applicable regulatory approval, or if this timeline only applies to the maintenance activity specified in Table 1-2 corresponding to a maximum maintenance interval of 4 calendar months.

		2. Assuming that there is a different implementation schedule for different maintenance activities for some protection system component types (namely station dc supply and communication systems), the middle bullet on page 1 of the implementation plan does not seem to consider that it may not be possible to identify whether some protection system components are completely being addressed by PRC-005-2 or the Program developed for the previous standards. In other words, during implementation, some maintenance activities for the same protection system component may be addressed by PRC-005-2, while other maintenance activities may be addressed by the Program develoepd for the previous standards.
		3. It is unclear whether control circuitry (trip paths) from protective relays that respond to mechanical quantities is included. This issue is addressed in the supplementary reference but is vague in the draft standard itself.
		4. This draft of PRC-005-2 requires the Protection System Maintenance Program (PSMP) to “include all applicable monitoring attributes and related maintenance activities” per the Tables and requires an entity to “implement and follow its PSMP.” Under the draft standard, it is unclear whether an entity has to document in the PSMP and/or maintenance records how they accomplish(ed) the maintenance activities or simply to indicate that the maintenance activities are included and have been completed within the defined intervals. It is clear that entities are afforded some latitude in how they conduct the required maintenance activities. However, the level of detail required to document (1) how an entity chooses to perform the maintenance activities and (2) that applicable maintenance activities have been completed is not clear.
		5. In Table 1-2, there is a maintenance activity related to communication systems to “verify essential signals to and from other Protection System components.” It is unclear if this statement is referring to control circuitry associated with the communication system end devices, end device input and output operation (as in Table 1-1 for protective relays), or something else. It is recommended that the requirement be to “verify operation of communication system inputs and outputs that are essential to proper functioning of the Protection System.” This language is consistent with that used for protective relays in Table 1-1.

		6. Referring to Table 1-2, it is unclear whether an entity has the sole authority decide which 'performance criteria' are 'pertinent.' Additionally, it is unclear if an entity must document the 'communications technology applied' and the associated 'performance criteria' in its PSMP.
		7. In Table 1-4, it is unclear if there is a distinction between the terms 'resistance' and 'ohmic values.' If there is a distinction, then this distinction should be clarified.
		8. In Table 1-4, it is unclear if there is a distinction between the terms 'battery terminal connection resistance' and 'unit-to-unit connection resistance.' If there is a distinction, then this distinction should be clarified.
		9. In Table 1-4, replace the term 'resistance' with 'impedance.'
		10. Recommend that the 6 calendar month interval in Table 1-4(b) be lengthened to 18 calendar months to be more consistent with similar maintenance activities for other battery types. At minimum, lengthen the interval to at least 7 calendar months in a similar way that 3 calendar months was lengthened to 4 calendar months for other maintenance activities.
		11. Referring to Table 1-5, no periodic maintenance is required for "control circuitry whose continuity and energization or ability to operate are monitored and alarmed." It is unclear whether or not it is acceptable to verify DC voltage at the actuating device trip terminals at least once every 12 calendar years for "unmonitored control circuitry associated with protective functions." It is recommended that periodically verifying DC voltage in this manner be an acceptable means of accomplishing the maintenance activity identified in Table 1-5 for unmonitored control circuitry associated with protective functions.
		12. Referring to 4.2. Facilities of the draft standard, it is unclear whether protection systems for transformers that step down from over 100kV to below 15kV are applicable to the standard. Even if there are normally-open distribution feeder ties for purposes of transferring load in a make-before-break fashion, these transformers are generally not considered BES elements.
		13. Referring to 4.2.5 of the draft standard, it is unclear whether protection for generator excitation systems are applicable to the standard.

		14. It is unclear whether external timing relays (e.g., Zone 2) are considered control circuitry components (like lockout and auxiliary relays) or protective relay components.
Response:	**Thank you for your comments.**	
	1. The SDT agrees with your observation and has changed the relevant parts of the implementation plan to clarify that they apply to the maintenance activities for the relevant maintenance intervals	
	2. The SDT agrees with your observation and has revised the Implementation plan to clarify.	
	3. The trip paths from protective relays that respond to mechanical quantities and are intended to detect faults are a part of the Protection System control circuitry. The sensing elements are omitted from PRC-005-2 testing requirements because the SDT is unaware of industry recognized testing protocols for these sensing elements. The SDT believes that Protection Systems that trip (or can trip) the BES should be included. This position is consistent with the currently-approved PRC-005-1, consistent with the SAR for Project 2007-17, and the SDT understands this to be consistent with the position of FERC staff. Note that trip signals from devices sensing mechanical parameters not directly indicative of an electrical fault need not be tested per this standard.	
	4. The SDT has removed parts 1.1 and 1.3 from Requirement R1, addressing part of your comment. The SDT agrees that PRC-005-2 allows some leeway in how an entity fulfills the testing requirements of the standard. Section 15 of the Supplementary Reference and FAQ document provides numerous examples of possible testing techniques for the various component types making up a Protection System. An entity's PSMP should clearly define how the testing requirements of the standard are fulfilled. The Measures for each requirement, as well as Section 15.8 of the Supplementary Reference and FAQ document, provide some examples of possible compliance documentation for completion of testing.	
	5. The SDT agrees with your suggestion and has changed the standard accordingly.	
	6. The entity has the authority to establish its own acceptable performance criteria. This criteria does not need to be in the PSMP, but should reside somewhere within the maintenance documentation.	

	7. As utilized on Table 1-4, the term "ohmic value" is a generic reference to the measurement of a battery cell or units ability to pass current flow. This may be done using conductance, resistance or impedance measurements; the various battery test equipment manufacturers use different measurement methods and the term "ohmic value" is meant to be technology neutral. See FAQ on page 78 of the Supplementary Reference and FAQ document. The term "resistance" as used in Table 1-4 refers specifically to the dc resistance of the battery terminal connections and the battery intercell/inter-unit physical connectors. See related FAQ on pages 74-75 of the Supplementary Reference and FAQ document.
	8. Battery terminal connection resistance is a measurement of the resistance of a connection at a battery terminal. Battery intercell or unit-to-unit connection resistance is a measurement of the resistance of the external conductor interconnecting two adjacent battery cells or two adjacent multi-cell battery units. The SDT believes these are common battery maintenance terms used throughout the industry.
	9. The SDT disagrees and believes that resistance as used in Table 1-4 is the appropriate term for the parameters to be measured and is consistent with standard battery system maintenance terminology.
	10. The SDT disagrees with your recommendation to standardize maintenance intervals between different battery types that have distinctly different failure mechanisms. See related FAQ on pages 80-81 of the Supplementary Reference and FAQ document for further discussion of requirements for ohmic measurements of VRLA batteries. Concerning your recommendation to allow for 7 calendar months, the SDT believes that the six-month interval specified is appropriate.
	11. The SDT has modified this specific portion of the Table, and believes that the modifications address your concern. Please see Section 15.3 of the Supplementary Reference and FAQ document for a discussion of this topic.
	12. The standard does not include the Protection Systems for transformers that step down from over 100kV to below 15kV if these transformers are not BES elements. If Protection Systems are installed for purposes of detecting Faults on BES elements, these Protection Systems are included.
	13. Paragraph 4.2.5.1 indicates that the excitation system protection system would only be in scope if the excitation system generates signals that trip the generator output breaker either directly or via lockout or auxiliary tripping relays.

	14. As timing is critical to proper Protection System function, timers are considered protective relays.	
Wisconsin Electric Power Co. Wisconsin Electric Power Marketing	Affirmative Ballot	Do we need to track the maintenance of another owner's Protection System Component which is part of my Protection System? For example, if our Protection System includes and trips another owner's circuit breaker, do we need to track maintenance and testing for that circuit breaker?
Response: Thank you for your comment and affirmative ballots. **The owner is responsible for the maintenance of Protection System Components. You do not need to track the maintenance of other owner's Protection System Components.**		
Beaches Energy Services	Negative Ballot	1. Standard requires 100% perfection, e.g., missing any one interval for any one piece of equipment leads to a violation. This is; however, mitigated by the fact that the intervals are long enough to allow implementation of business practices with shorter intervals to add some "buffer".

		2. The "Applicability" section is not consistent with the recent Y-W and Tri-State PRC-005 interpretation (Project 2009-17). The Applicability 4.2.1 states that the standard includes: "Protection Systems that are installed for the purpose of detecting faults on BES Elements (lines, buses, transformers, etc.)" whereas the Y-W and Tri-State interpretation basically says that "transmission Protection Systems" both detect AND trip BES Elements; Hence, the new standard alters the existing "and" statement in the Y-W and tri-State interpretation and eliminates the consideration of tripping BES Elements from applicability. This will have the consequence of including Protection Systems on step-down transformers that "look backwards" into the BES system as applicable to the standard. For instance, a distribution network fed from multiple transmission interconnections will have protective relaying (directional overcurrent most likely) to look backwards into the transmission system to trip the step-down transformer to prevent back-feed from the distribution network). This step-down transformer protection would be included in the new standard because it's purpose to the detect faults on the BES (event though the purpose of the protection is actually to protect overloading of the distribution and for worker safety on the BES); whereas the Y-W and Tri-State interpretation excludes that protection from the existing PRC-005-1 standard.

Response: Thank you for your comments.

1. **The NERC criteria for VSLs do not currently permit them to allow some level of non-performance without being in violation. The graded approach of the VSL for Requirement R3 allows the RE to provide discretion when assessing severity of the violation when only a relatively small number of maintenance activities have been missed.**
2. **The SDT believes that the Applicability as stated in PRC-005-2 is correct and that it supports the reliability of the BES. The SDT observes that the approved Interpretation addresses the term, “transmission Protection System”, and notes that this term is not used within PRC-005-2; thus the interpretation does not apply to PRC-005-2. PRC-005-2 specifically addresses “Protection Systems that are installed for the purpose of detecting faults on BES Elements.” Please see Section 2.3 of the Supplementary Reference and FAQ document for additional discussion. If, as in your example, a protective relay is installed to prevent back feeding (rather than for detecting BES faults), it would not be applicable even if it has a secondary result of incidentally detecting faults on the BES.**

Florida Municipal Power Pool	Negative Ballot	1. Standard requires 100% perfection, e.g., missing any one interval for any one piece of equipment leads to a violation. This is; however, mitigated by the fact that the intervals are long enough to allow implementation of business practices with shorter intervals to add some "buffer", e.g., if the standard says an interval is 6 years, then, through business practice we can shorten actual maintenance and testing intervals to something like 4 years to allow ourselves a 2 year buffer to catch equipment that may have been missed due to difficulty in scheduling outages and the like. Does not cause us to vote negative.
	Negative Poll	2. The "Applicability" section is not consistent with the recent Y-W and Tri-State PRC-005 interpretation (Project 2009-17). The Applicability 4.2.1 states that the standard includes: "Protection Systems that are installed for the purpose of detecting faults on BES Elements (lines, buses, transformers, etc.)" whereas the Y-W and Tri-State interpretation basically says that "transmission Protection Systems" both detect AND trip BES Elements; Hence, the new standard alters the existing "and" statement in the Y-W and tri-State interpretation and eliminates the consideration of tripping BES Elements from applicability. This will have the consequence of including Protection Systems on step-down transformers that "look backwards" into the BES system as applicable to the standard. For instance, a distribution network fed from multiple transmission interconnections will have protective relaying (directional overcurrent most likely) to look backwards into the transmission system to trip the step-down transformer to prevent back-feed from the distribution network). This step-down transformer protection would be included in the new standard because it's purpose to the detect faults on the BES (event though the purpose of the protection is actually to protect overloading of the distribution and for worker safety on the BES); whereas the Y-W and Tri-State interpretation excludes that protection from the existing PRC-005-1 standard. Causes us to vote Negative.

Response: Thank you for your comments.

1. **The NERC criteria for VSLs do not currently permit them to allow some level of non-performance without being in violation. The graded approach of the VSL for Requirement R3 allows the RE to provide discretion when assessing severity of the violation when only a relatively small number of maintenance activities have been missed.**
2. **The SDT believes that the Applicability as stated in PRC-005-2 is correct and that it supports the reliability of the BES. The SDT observes that the approved Interpretation addresses the term, "transmission Protection System", and notes that this term is not used within PRC-005-2; thus the interpretation does not apply to PRC-005-2. PRC-005-2 specifically addresses "Protection Systems that are installed for the purpose of detecting faults on BES Elements." Please see Section 2.3 of the Supplementary Reference and FAQ document for additional discussion. If, as in your example, a protective relay is installed to prevent back feeding (rather than for detecting BES faults), it would not be applicable even if it has a secondary result of incidentally detecting faults on the BES.**

Constellation Power Source Generation, Inc.	Negative Ballot Negative Poll	Constellation Power Generation is voting against the approval of this standard because, from a generation perspective, the maintenance intervals and activities described in all of the Tables are too prescriptive. Constellation Power Generation is concerned that the Tables may conflict with the existing PSMPs built by Registered Entities based on years of operational experience with the testing methods and testing frequencies that work best for the specific asset. In the worst case, the specifics dictated in the Tables may move Entities away from more stringent PSMPs that are currently in practice. For this reason, Constellation Power Generation suggests that the drafting team revisit the concept of the Tables to better convey useful guidance without creating a compliance requirement that may be contrary to improved reliability. The Registered Entity should be given more flexibility to dictate how a protection system component should be tested, and at what frequency. Furthermore, the technical manpower and compliance documentation demands to implement a performance based protection system maintenance program are so onerous that it is highly unlikely that any small generation entity would use it. Please refer to Constellation Power Generation's submitted comments for other issues identified with this standard.

Response: Thank you for your comment.

FERC Order 693 and the approved SAR assign the SDT to develop a standard with maximum allowable intervals and minimum maintenance activities. The intervals and activities specified are believed by the SDT to be technically effective, in a fashion that may be consistently monitored for compliance.

Duke Energy/ Fort Pierce Utilities Authority	Negative Ballot	Duke Energy disagrees with the wording in the Applicability section 4.2.1. The wording change from PRC-005-2 draft 4 to PRC-005-2 draft 5 expands the reach of the standard to relaying schemes that detect faults on the BES but are not intended to provide protection for the BES. Duke Energy's standard protection scheme for dispersed generation at retail stations would be subject to the standard due to the changes in section 4.2.1. These protection schemes are design to detect faults on the BES, but do not operate BES elements nor do they interrupt network current flow from the BES. In the most recent draft the relays, current transformers, potential transformers, trip paths, auxiliary relays, batteries, and communication equipment associated with the dispersed generation protection scheme would be subject to the requirements in PRC-005-2. Previous drafts of the standard would not have required Duke Energy to maintain the protection system components associated with dispersed generation schemes at retail stations in accordance to the requirements in PRC-005-2. The new wording in section 4.2.1 would add significant O&M costs and resource constraints due to the inclusion of protection system devices at retail stations without increasing the reliability of the BES. Duke Energy does not believe it was the intent of the standard to include elements that did not have an impact on the reliability of the BES. Duke Energy would prefer the definition used in PRC-005-1A Appendix 1 "any Protection System that is installed for the purpose of detecting faults on transmission elements (lines, buses, transformers, etc.) identified as being included in the Bulk Electric System (BES) and trips an interrupting device that interrupts current supplied directly from the BES."

Response: Thank you for your comment.

The SDT believes that the Applicability as stated in PRC-005-2 is correct and that it supports the reliability of the BES. The SDT observes that the approved Interpretation addresses the term, "transmission Protection System", and notes that this term is not used within PRC-005-2; thus the interpretation does not apply to PRC-005-2. PRC-005-2 specifically addresses "Protection Systems that are installed for the purpose of detecting faults on BES Elements." Please see Section 2.3 of the Supplementary Reference and FAQ document for additional discussion.

Lakeland Electric	Negative Ballot	First Concern is that evidence of maintenance and testing at this level will be very difficult to obtain, track and report. Second is the word exercise - what is really meant by this. This may be difficult or impossible to do without impacting or tripping the circuit. The "Applicability" section is not consistent with the recent Y-W and Tri-State PRC-005 interpretation (Project 2009-17).
Response: Thank you for your comments 1. **FERC Order 693 and the approved SAR assign the SDT to develop a standard with maximum allowable intervals and minimum maintenance activities. The intervals and activities specified are believed by the SDT to be technically effective, in a fashion that may be consistently monitored for compliance. Nonetheless, the SDT agrees that significant effort will be necessary to implement these requirements and to prove compliance.** 2. **The SDT is unsure to which utilization of the word "exercise" you refer.** 3. **The SDT believes that the Applicability as stated in PRC-005-2 is correct and that it supports the reliability of the BES. The SDT observes that the approved Interpretation addresses the term, "transmission Protection System", and notes that this term is not used within PRC-005-2; thus the interpretation does not apply to PRC-005-2. PRC-005-2 specifically addresses "Protection Systems that are installed for the purpose of detecting faults on BES Elements." Please see Section 2.3 of the Supplementary Reference and FAQ document for additional discussion.**		
Illinois Municipal Electric Agency	Negative Ballot	IMEA greatly appreciates SDT efforts to address/resolve issues, improve PRC-005, and consolidate various PRC Reliability Standards. However, IMEA is voting Negative based on the inconsistency between the current Applicability language and the PRC-004 and PRC-005 interpreation (Project 2009-17) recently approved by FERC. IMEA supports comments submitted by Florida Municipal Power Agency which address this inconsistency, and encourages the SDT to address this issue which is important to municipal entities.

Response: Thank you for your comment. **The SDT believes that the Applicability as stated in PRC-005-2 is correct and that it supports the reliability of the BES. The SDT observes that the approved Interpretation addresses the term, "transmission Protection System", and notes that this term is not used within PRC-005-2; thus the interpretation does not apply to PRC-005-2. PRC-005-2 specifically addresses "Protection Systems that are installed for the purpose of detecting faults on BES Elements." Please see Section 2.3 of the Supplementary Reference and FAQ document for additional discussion. If, as in your example, a protective relay is installed to prevent back feeding (rather than for detecting BES faults), it would not be applicable even if it has a secondary result of incidentally detecting faults on the BES.**		
Consumers Energy	Negative Ballot	R3 continues to have "...initiate resolution of unresolved maintenance issues." Initiate means to start or set going, it does not mean closure of the item. If a remediation project is initiated and not closed out in a timely manner an auditor could penalize an entity based on what the auditor considers timely. We suggest definitive language indicating closure of the unresolved maintenance issue. Also, it would be beneficial to specify time frame for closing the issue.
Response: Thank you for your comment. **PRC-005-2 only requires the entity "… initiate resolution" of the issue found. The SDT recognizes that performance of the activities necessary to resolve an issue are entirely dependent upon the circumstances surrounding that issue and, consequently, will require varying amounts of resources and time to complete the process. The SDT has clarified the intent of the requirement to initiate resolution of Unresolved Maintenance Issues by including it separately as Requirement R5 and revising the language such that the responsible entity must demonstrate its efforts to correct Unresolved Maintenance Issues. Demonstrating the entity has initiated resolution can include such things as documentation of a work order, replacement component order, invoice, or purchase order, etc… Producing evidence of this nature would then indicate adherence to the requirement.**		

Florida Keys Electric Cooperative Assoc.	Negative Ballot	The "Applicability" section is not consistent with the recent Y-W and Tri-State PRC-005 interpretation (Project 2009-17). The Applicability 4.2.1 states that the standard includes: "Protection Systems that are installed for the purpose of detecting faults on BES Elements (lines, buses, transformers, etc.)" whereas the Y-W and Tri-State interpretation basically says that "transmission Protection Systems" both detect AND trip BES Elements; Hence, the new standard alters the existing "and" statement in the Y-W and tri-State interpretation and eliminates the consideration of tripping BES Elements from applicability. This will have the consequence of including Protection Systems on step-down transformers that "look backwards" into the BES system as applicable to the standard. For instance, a distribution network fed from multiple transmission interconnections will have protective relaying (directional overcurrent most likely) to look backwards into the transmission system to trip the step-down transformer to prevent back-feed from the distribution network). This step-down transformer protection would be included in the new standard because it's purpose to the detect faults on the BES (event though the purpose of the protection is actually to protect overloading of the distribution and for worker safety on the BES); whereas the Y-W and Tri-State interpretation excludes that protection from the existing PRC-005-1 standard.
Response: Thank you for your comment. **The SDT believes that the Applicability as stated in PRC-005-2 is correct and that it supports the reliability of the BES. The SDT observes that the approved Interpretation addresses the term, “transmission Protection System”, and notes that this term is not used within PRC-005-2; thus the interpretation does not apply to PRC-005-2. PRC-005-2 specifically addresses “Protection Systems that are installed for the purpose of detecting faults on BES Elements.” Please see Section 2.3 of the Supplementary Reference and FAQ document for additional discussion.**		

Independent Electricity System Operator	Negative Ballot	The IESO disagrees with the concept that auditors use the standards as minimum requirements and evaluate compliance based on a registered entity's own governance. We believe that the entity could be found non-compliant with Requirement R3 if they fail to follow the internal maintenance intervals established in their PSMP, even though actual maintenance intervals are no less frequent than the prescribed maximum intervals established in the draft standard. The potential for such a finding will discourage conscientious entities from setting higher internal targets for their planned maintenance and promote compliance with only the minimum requirements of the standard. We therefore propose the following revision to Requirement R3: R3. Each Transmission Owner, Generator Owner, and Distribution Provider shall implement and follow its PSMP and initiate resolution of any unresolved maintenance issues. In the case of time-based maintenance programs, each Transmission Owner, Generator Owner, and Distribution Provider is permitted to deviate from its PSMP provided that actual maintenance intervals do not exceed those specified in Tables 1-1 through 1-5, Table 2 and Table 3. [Violation Risk Factor: High] [Time Horizon: Operations Planning]
Response: The standard and the Supplementary Reference and FAQ document have been changed to address your concerns. Specifically, Requirement R1 part 1.3 has been removed; Requirement R3 has been revised so that, for time-based programs, entities shall comply with the tables; Requirement R4 has been added to address performance-based maintenance, and Requirement R5 has been added to address Unresolved Maintenance Issues.		
Florida Municipal Power Agency	Negative Ballot	We have three remaining concerns. The second concern leads us to recommend a negative vote.

	Negative Poll	1. Standard requires 100% perfection, e.g., missing any one interval for any one piece of equipment leads to a violation. This is; however, mitigated by the fact that the intervals are long enough to allow implementation of business practices with shorter intervals to add some "buffer", e.g., if the standard says an interval is 6 years, then, through business practice we can shorten actual maintenance and testing intervals to something like 4 years to allow ourselves a 2 year buffer to catch equipment that may have been missed due to difficulty in scheduling outages and the like. Does not cause us to vote negative.
		2. The "Applicability" section is not consistent with the recent Y-W and Tri-State PRC-005 interpretation (Project 2009-17). The Applicability 4.2.1 states that the standard includes: "Protection Systems that are installed for the purpose of detecting faults on BES Elements (lines, buses, transformers, etc.)" whereas the Y-W and Tri-State interpretation basically says that "transmission Protection Systems" both detect AND trip BES Elements; Hence, the new standard alters the existing "and" statement in the Y-W and tri-State interpretation and eliminates the consideration of tripping BES Elements from applicability. This will have the consequence of including Protection Systems on step-down transformers that "look backwards" into the BES system as applicable to the standard. For instance, a distribution network fed from multiple transmission interconnections will have protective relaying (directional overcurrent most likely) to look backwards into the transmission system to trip the step-down transformer to prevent back-feed from the distribution network). This step-down transformer protection would be included in the new standard because it's purpose to the detect faults on the BES (event though the purpose of the protection is actually to protect overloading of the distribution and for worker safety on the BES); whereas the Y-W and Tri-State interpretation excludes that protection from the existing PRC-005-1 standard. Causes us to vote Negative.

		3. The standard reaches further into the distribution system than we would like for UFLS and UVLS (Table 3). We have two parts to this concern. First, it will be somewhat onerous to present all the evidence of distribution class protection system maintenance and testing at audits. And second, our biggest concern is in the testing required to "exercise" a lockout or tripping relay. This may require installation of test blocks to allow such exercising of the lockout or tripping relay without tripping the distribution circuit, and such a test could be difficult to perform without impacting customer continuity of service if the lockout/tripping relay for the UFLS is the same as the lockout/tripping relay for distribution fault protection. However, most of FMPA's members have microprocessor-based relays for distribution circuits with the UFLS / UVLS embedded within the microprocessor based relay where the path from the UFLS / UVLS relay to the lockout / tripping relay is internal to the micro-processor based relay, so, testing the UFLS/UVLS relay will at the same time test the internal lockout / switching relay. However, for older electro-mechanical UFLS schemes, this type of testing could be problematic. Borderline concerning whether this causes us to vote Negative or not. As a result, FMPA recommends a Negative vote with the second and third comments, emphasizing that it is the second comment that causes us to vote negative but we also would like the 3rd comment addressed. Feedback appreciated. Vote and comments are due next Wednesday, 9/28.

Response: Thank you for your comments

1. **The NERC criteria for VSLs do not currently permit them to allow some level of non-performance without being in violation. The graded approach of the VSL for Requirement R3 allows the RE to provide discretion when assessing severity of the violation when only a relatively small number of maintenance activities have been missed.**
2. **The SDT believes that the Applicability as stated in PRC-005-2 is correct and that it supports the reliability of the BES. The SDT observes that the approved Interpretation addresses the term, "transmission Protection System", and notes that this term is not used within PRC-005-2; thus the interpretation does not apply to PRC-005-2. PRC-005-2 specifically addresses "Protection Systems that are installed for the purpose of detecting faults on BES Elements." Please see Section 2.3 of the Supplementary Reference and FAQ Document for additional discussion. If, as in your example, a protective relay is installed to prevent back feeding (rather than for detecting BES faults), it would not be applicable even if it has a secondary result of incidentally detecting faults on the BES.**
3. **UVLS and UFLS systems are required to be included as part of the Project 2007-17 Standard Authorization Request (SAR). The SDT believes that electromechanical lockout relays require periodic operation. As such, these devices are required to be exercised at the 12 year interval for UVLS and UFLS systems. The SDT recognizes the risk of human error trips when working with testing of lockout devices but believes these risks can be managed.**

Lakeland Electric	Negative Poll	The "Applicability" section is not consistent with Tri-State PRC-005 interpretation.

Response: Thank you for your comments

The SDT believes that the Applicability as stated in PRC-005-2 is correct and that it supports the reliability of the BES. The SDT observes that the approved Interpretation addresses the term, "transmission Protection System", and notes that this term is not used within PRC-005-2; thus the interpretation does not apply to PRC-005-2. PRC-005-2 specifically addresses "Protection Systems that are installed for the purpose of detecting faults on BES Elements." Please see Section 2.3 of the Supplementary Reference and FAQ document for additional discussion.

Liberty Electric Power LLC	Negative Ballot	With the development and publication of maximum maintenance and testing intervals (the Tables), there is no longer a reliability need for a RE to identify the associated time-based maintenance intervals for Protection System Components. Further, REs who wish to perform these activities in shorter intervals than those allowed by the standard risk non-compliance (See Supplementary Reference, page 27,"If your PSMP (plan) requires activities more often than the Tables maximum then you must perform and document those activities to your more stringent standard.")If the entity completes all activities within the maximum interval allowed by the standard, there can be no reliability concern; if there is a reliability issue, then the table interval is incorrect. I would suggest the following changes.
		1. Change R1.2 to read "Identify any Protection System component where the RE is using a performance based maintenance interval. No batteries associated with the station DC supply component type of Protection System shall be included in a performance based system"
		2. Change R1.3 to read "The intervals for time-based programs are established in Table 1-1 through 1-5, Table 2, and Table 3".
		3. Change M1 to add the phrase "for performance-based components" after the words "maintenance intervals".
		4. In M1, replace the words "the type of maintenance program applied (time-based, performance based, or a combination of these maintenance methods") with the words "the identification of any protection system components using performance based intervals".
Response: The standard and the Supplementary Reference and FAQ document have been changed to address your concerns. Specifically, Requirement R1 part 1.3 has been removed; Requirement R3 has been revised so that, for time-based programs, entities shall comply with the tables; Requirement R4 has been added to address performance-based maintenance, and Requirement R5 has been added to address Unresolved Maintenance Issues. The Measures have also been revised.		
Manitoba Hydro	Negative Ballot	Manitoba Hydro is voting negative for the following reasons:

		1. Grace Periods Grace periods should be permitted on the maintenance time intervals. While we understand that grace periods can be built into a PSMP, maintenance decisions that compromise reliability may still have to be made just to meet the specified time intervals and avoid penalty. An example of this would be removing a hydraulic generator from service at a time of low reserve to meet a maintenance interval and avoid non-compliance. Grace periods are also required in the case of extreme weather conditions. Such conditions may make it unsafe to perform maintenance within the maintenance interval (for example, performing a battery inspection at a remote station during severe winter weather) or may create a risk to reliability if the equipment being maintained is removed from service during these conditions. Utilities need to retain a reasonable amount of discretion and flexibility to make maintenance decisions that are best for safety and reliability without risking non-compliance. In addition, we disagree with the basis that the Drafting Team has established that grace periods are not permitted because of FERC Order 693 which requires that 'maximum' time intervals are established within PRC-005-2. With grace periods, a maximum time interval obviously becomes the required maintenance interval plus the maximum permitted grace period. So we strongly feel that grace periods can be added to the standard while adhering to the FERC Order. We also disagree with the line of reasoning that the Drafting Team used to establish the maximum maintenance intervals for relays as outlined on page 38 of the Supplementary Reference and FAQ document. To our knowledge, no document has been produced which provides evidence of maximum time intervals that work well for 'maintenance cycles that have been in use in generator plants for decades'. Our Protection Systems Maintenance experience indicates that the proposed intervals are acceptable as nominal time intervals with grace periods, but not as maximum time intervals without grace periods. Without a grace period, the bulk of protection maintenance on a six year maintenance cycle will have to be done one year earlier than previously required, in order to allow for the last year of the maximum interval to be used as the grace period. Manitoba Hydro considers this an unnecessary burden on resources with no benefit to reliability. Manitoba Hydro recommends that grace periods be permitted within PRC-005-2 if an entity can demonstrate a reliability or safety related need for using a grace period. This would require the Drafting Team to develop reliability-related criteria for using a grace period.

		2. Phased Implementation Plan Manitoba Hydro does not agree with the prescribed phased implementation plan. Entities should be given a single compliance date for each of the maintenance intervals, and be allowed the flexibility to schedule and complete their maintenance as required while transitioning to the defined time intervals in PRC-005-2. For example, if a maximum maintenance interval is 6 calendar years, the implementation plan should only require that "The entity shall be 100% compliant on the first day of the first calendar quarter 84 months following applicable regulatory approval, or in those jurisdictions where no regulatory approval is required, on the first day of the first calendar quarter 96 months following Board of Trustees adoption." (item 4c.). The existing standard PRC-005-1 already requires protection systems to be maintained as part of a program. Prescribing how an entity must reach full compliance will provide a negligible improvement in reliability, while significantly increasing the compliance burden. PRC-005-2 affects a large number of assets, and proving compliance for prescribed percentages of assets during the transition period creates unnecessary overhead with no added value. We suggest that items 3a., 3b., 4a., 4b., 5a. and 5b be removed from the implementation plan and that NERC measure progress on reaching PRC-005-2 intervals using means other than Compliance measures such as industry surveys.

Response: Thank you for your comments.

1. **FERC Order 693 directs NERC to establish maximum allowable intervals. The SDT believes a "grace period" process as you describe would not satisfy this directive. In essence, by specifying maximum allowable intervals the SDT is leaving the establishment of normal maintenance intervals and grace periods to the entities discretion and to what works best for their scheduling needs and program flexibility. Alternatively, if the SDT believes that 6 calendar years is the maximum allowable interval for a given maintenance activity, it could have done as you suggested and defined a 4 year "normal" interval with a 2 year grace period for a maximum allowable interval of 6 years. The SDT believes the management of normal maintenance intervals and grace periods is best left to the entity's PSMP and thus chose only to specify the maximum allowed interval within which entities must comply. Note that if data is available to prove reliability is maintained, performance-based maintenance is available to achieve longer maintenance intervals.**
2. **The SDT believes that it is not practical for all entities to rapidly transition all of their Protection Systems to the new program, especially with some component types on maintenance intervals of up to 12 years. Nonetheless, all in-scope Protection Systems must be maintained by either a PRC-005-1 program or a PRC-005-2 program. The SDT believes the phased approach mapped out in the Implementation plan is practical. If an entity wishes to implement PRC-005-2 on a more rapid rate than laid out in the Implementation plan to lessen the complexity of documentation requirements, they are free to do so.**

Muscatine Power & Water	Negative Ballot	1. Section D.1.3, in Data Retention, requires an entity to retain the two most recent performances of each distinct maintenance activity. This is an unreasonable and problematic requirement and does not enhance reliability. Recommend the data retention be changed to require only the most recent test record. A compliance audit should be focused on the present day and not in the past. PRC-005-2 allows testing intervals of up to 12 calendar years. If we are required to have the two most recent test results, we could conceivably have to retain a relay test record for up to 24 years! Hypothetically, if we have a test record from ten years ago, but we do not have the record from 12 years before that, how does that adversely affect the reliability of the BES today? The standard should focus on – Is the Entity compliant TODAY?
		2. Table 1-5 requires a maintenance activity to, “Verify that each trip coil is able to operate the circuit breaker, interrupting device, or mitigating device.” Recommend this be changed to, “Verify that a trip coil is able to operate the circuit breaker, interrupting device, or mitigating device.” Alternately, change the wording to, “Electrically operate each interrupting device every 6 years.” While requiring each trip coil to operate the breaker sounds good in theory, however, it creates issues in the field and may create more problems than it solves. The trip coils are located in the panel at the breaker and are not configured to test independently. Isolating one trip coil from the other may include “lifting a wire” that may not get landed properly when the test is complete. Using an actual event only tests one coil and we may not know which coil tripped the device. The current language is a recipe for a compliance violation. The standard should focus on ensuring the control circuitry is intact and trips the breaker without injecting additional, unneeded risk to the BES.
		3. In the tables for dc Supply the term “unit-to-unit” is used along with “intercell” when referring to measurement of connection resistance. From the applicable IEEE standards (e.g. IEEE 450), the standard terminology seems to be “intercell”. It is recommended that the “unit-to-unit” term be removed to avoid confusion regarding what is to be verified.

Response: Thank you for your comments. **1. In order that a Compliance Monitor can be assured of compliance, the SDT believes that the Compliance Monitor will need the data of the most recent performance of the maintenance, as well as the data of the preceding one to validate that entities have been in compliance since the last audit (or currently, since the beginning of mandatory compliance). The SDT has specified the data retention in the posted standard to establish this level of documentation. This seems to be consistent with the current practices of several Regional Entities. Obviously, Compliance Monitors should not expect entities to be able produce records for maintenance performed prior to there being requirements for that maintenance to be performed.** **2. The description of the configuration of the second trip coil on circuit breakers you have provided is not typical of the redundant approach taken by most entities. Typically, second trip coils are electrically isolated from the first trip coil and are often fed by a separately fused dc control circuit with different relay trip output, lockout and auxiliary tripping contacts utilized in each circuit. The SDT believes that it is important that redundant trip paths be maintained within the indicated interval, and the prescribed interval already considers the reliability benefits of redundant equipment.** **3. The term "unit-to-unit" is used for the conductor utilized to connect one multi-celled battery jar to an adjacent multi-celled battery jar.**		
NorthWestern Energy	Negative Ballot	I recommend a no vote please see my comments below. 1. For Table 1-5 Trip coils or actuators of circuit breakers, interrupting devices, or mitigating devices 6 calendar years Verify that each trip coil is able to operate the circuit breaker, interrupting device, or mitigating device. Provisions need to be added to allow non-tripping checks of coils on the BES element that will Trip load. If I am reading the purposed correct the circuit switcher feeding distribution banks at or above 100kV will need to be tripped taking out load. 2. It was my understanding the IEEE standard 450 allowed for 7 year load test interval for VLA and NiCad batteries the standard calls out for 6 years. It appears that the standard has been recently updated and should be verified. My last objection is Table 1-2 3. Any unmonitored communications system necessary for correct operation of protective functions, and not having all the monitoring attributes of a category below. 4 calendar months Verify that the communications system is functional. 4 calendar months is excessive on annual maint and will discourage communications assisted tripping when not absolutely needed. 1 year is a more reasonable and doable timeline.

Response: Thank you for your comments.

1. **PRC-005-2 specifically addresses "Protection Systems that are installed for the purpose of detecting faults on BES Elements." If the Protection System in question is not protecting a BES component, it is not applicable to this standard. Please see Section 2.3 of the Supplementary Reference and FAQ document for additional discussion.**
2. **IEEE 450 only pertains to VLA batteries. IEEE 1106 pertains to NiCad batteries. The SDT believes that the 6 calendar year interval specified in PRC-005-2 is appropriate.**
3. **The SDT believes that performing this maintenance activity at 4 month intervals is proper for unmonitored communications systems.**

Seattle City Light	Negative Ballot	Regarding Voltage and Current Sensing Device Maintenance & Testing Activities: Table 1-3 of the standard lists the minimum required maintenance activities for voltage and current sensing devices as "Verify that current and voltage signal values are provided to the protective relay." Consistent with Table 1-3, Section 15.2.1 of the Supplementary Reference states that an entity "...must verify that the protective relay is receiving the expected values from the voltage and current sensing devices..." The Supplementary Reference further offers examples of how this requirement may be satisfied with most of the examples reference the need to verify the signal at each relay in the circuit. We recognize the need to verify a voltage signal at each protective relay, as these devices are wired in parallel and an open circuit at one location may not impact the other devices on the circuit. However, we do not agree that there is a need to verify a current signal at each protective relay. Current devices are wired in series; an open circuit at any location will impact all other devices on the circuit. For this reason, a single measurement of the current circuit is sufficient. We recommend updating Table 1-3 and the supplementary reference to account for the different physical characteristics of voltage and current circuits.

Response: Thank you for your comment.

An open circuit is not the only failure mechanism for a CT secondary circuit. Grounded CT secondary wiring can result in situations where accurate current is present in the part of the secondary circuit upstream of the ground but current would be shunted to ground and might not pass through devices downstream of the ground. Entities should not interpret PRC-005-2 as specifying "how" to test but rather that PRC-005-2 only specifies "what" to test.

Seminole Electric Cooperative, Inc.	Negative Ballot	We recommend the SDT consider an interval of 12 calendar years for the component in row 3, of Table 1-5 on page 19 of the standard. The maximum maintenance interval for "Electromechanical lockout and/or tripping devices which are directly in a trip path from the protective relay to the interrupting device trip coil" should be consistent with the "Unmonitored control circuit" interval which is 12 calendar years. In order to test the lockout relays, it may be necessary to take a bus outage (due to lack of redundancy and associated stability issues with delayed clearing). Increasing the frequency of bus outages (with associated lines or transformers) will also increase the amount of time that the BES is in a less intact system configuration. Increasing the time the BES is in a less intact system configuration also increases the probability of a low frequency, high impact event occurring. Therefore, the Maximum Maintenance Interval should be 12 years for lockout relays. We believe that, as written, the testing of "each" trip coil and the proposed maintenance interval for lockout testing will result in the increased amount of time that the BES is in a less intact system configuration. We sincerely hope that the SDT will consider these changes.
Response: Thank you for your comments. **The SDT believes it is possible to manage the risks that you describe and that performance of this testing will be an overall benefit to the reliability of the BES. It is the majority opinion of the subject matter experts forming the SDT that testing of electromechanical devices with moving parts such as lockout relays be performed on a 6 year interval. Entities may use the PBM process to extend this interval if they desire.**		
Tennessee Valley Authority	Negative Ballot	It will take several years for TVA to implement checkback on 590 carrier blocking sets on the TVA system and not have to perform the PRC 005-2 requirement of verifying functionality every 4 months with no grace period. TVA carrier failure rate has not increased since the frequency was changed in January 2008 from 4 tests/year to 2 tests/year. We are also implementing an extensive PM test in October 2011 which will test 25% of the sets per year and will take readings of SWR, line loss, and receiver margin.
Response: Thank you for your comment. **The SDT believes that performing this maintenance activity at 4 month intervals will benefit the reliability of the BES. The Implementation plan allows for 15 months after regulatory approvals for entities to implement the program per PRC-005-2. You may also find performance-based maintenance (per Requirement R2) useful.**		

Utility Services, Inc.	Negative Ballot	While we generally agree with most of the proposal, we are concerned about the need to address validate of Protection System settings in the standard. We believe that there should be an explicit requirement on validating the settings to ensure that misoperations don't occur due to incorrect settings being programmed into the devices. Reliability will be enhanced if misoperations can be avoided due to the explicit check on the accuracy of the settings.
Response: Thank you for your comment. **Rows 1 and 2 of Table 1-1 currently require verification that relay settings are as specified.**		
Westar Energy	Negative Ballot	Westar agrees in general with most of the changes and modifications included in the proposed Standard. Specifically, the change from 3 to 4 calendar months in Table 1-4. 1. However, we believe that the terms Distributed and Non-Distributed need to be more clearly defined. 2. Clarification is also needed on an entities ability to use fault initiated trips as evidence for Table 1-5 - Control Circuitry.
Response: Thank you for your comments. **1. Please see Section 8.1.1 on pg 25-26 of the Supplementary Reference and FAQ document for discussions of the terms "distributed" and "non-distributed".** **2. Please see paragraph 7 in Section 8.1.2 of the Supplementary Reference and FAQ document for further discussion of this topic.**		
Xcel Energy, Inc.	Negative Ballot	The VSL for R3 is confusing because of the lack of a specified time horizon. Are the percentages quoted on an annual schedule basis, an audit period, or a continuous percentage measurement of any previously scheduled maintenance activities? Greater clarity is needed on the intent of this VSL.
Response: Thank you for your comment. **The VSLs that use a graduated VSL have been revised based, in part, on the comments you have provided. The percentages relate to the number of violations reported within the compliance monitoring period relative to the number of components within that component type.**		

Xcel Energy, Inc.	Negative Ballot	I appreciate the effort the SDT has invested in bringing PRC-005 to ballot and refer them to comments submitted by FirstEnergy. I agree with FE that PRC-005 encourages entities to set a low bar when developing protective system maintenance programs and will penalize those with robust programs that miss self-imposed schedules or targets.
Response: The standard and the Supplementary Reference and FAQ document have been changed to address your concerns. Specifically, Requirement R1 part 1.3 has been removed; Requirement R3 has been revised so that, for time-based programs, entities shall comply with the tables; Requirement R4 has been added to address performance-based maintenance, and Requirement R5 has been added to address Unresolved Maintenance Issues.		
Tennessee Valley Authority	Negative Ballot	1. It will take several years for TVA to implement checkback on 590 carrier blocking sets on the TVA system and not have to perform the PRC 005-2 requirement of verifying functionality every 4 months with no grace period. TVA carrier failure rate has not increased since the frequency was changed in January 2008 from 4 tests/year to 2 tests/year. We are also implementing an extensive PM test in October 2011 which will test 25% of the sets per year and will take readings of SWR, line loss, and receiver margin.
		2. TVA disagrees with the requirement to measure internal ohmic values of the station dc supply batteries every 18 months. The interval should be 36 months. Our experience from performing our routine maintenance program including cell impedance testing at 3-year intervals has been that the program is fully adequate in monitoring bank condition. An 18-month interval for internal resistance/impedance testing is an unnecessary burden.
		3. Are we required to test the trip circuit between the power transformer sudden pressure relay and the switch house or are we only required to test the trip circuit between the electrical sensing relays and the trip coils of the breakers?

Response: Thank you for your comments.

1. **The SDT feels that performing this maintenance activity at 4 month intervals will benefit the reliability of the BES. The Implementation Plan allows for 15 months after regulatory approvals for entities to implement the program per PRC-005-2. You may also find that performance-based maintenance (per Requirement R2) useful.**
2. **The SDT believes the required 18 month interval is better in line with accepted industry practice. Please note that for VLA batteries, an entity may entirely avoid internal ohmic measurements by implementing a VLA maintenance program using 18 month visual inspections and 6 yr capacity tests.**
3. **The trip path from a sudden pressure device is a part of the Protection System control circuitry. The sensing element is omitted from PRC-005-2 testing requirements because the SDT is unaware of industry recognized testing protocol for the sensing elements. The SDT believes that Protection Systems that trip (or can trip) the BES should be included. This position is consistent with the currently-approved PRC-005-1, consistent with the SAR for Project 2007-17, and the SDT understands this to be consistent with the position of FERC staff.**

Northeast Power Coordinating Council		The focus of the industry is on the field procedures necessary to ensure that protection systems are maintained and tested. This includes the verification that settings have been applied correctly. The accuracy of the settings calculated needs to be validated, and that step should be considered for inclusion in this Standard.

Response: Thank you for comment.

Validating the accuracy of settings calculations is more properly a design function and not a maintenance function. The SDT agrees that validating relays are left with the intended settings programmed in is important; as such, Row 1 and Row 2 of Table 1-1 require that settings be verified to be as specified.

PNGC Comment Group		Thank you for the opportunity to comment on the draft Standard PRC-005-2 - Protection System Maintenance. While the feedback from the last round of comments is appreciated, we still cannot support the standard as written due to our concerns outlined here. We appreciate the work that NERC has put into a new standard to encapsulate and replace the current PRC-005, PRC-008, PRC-011 and PRC-017. But, we believe that the draft Standard needs one important revision before the NERC Board of Trustees should approve it. Specifically, NERC should revise the draft version of PRC-005-2 so that the beginning of Section 4.2 reads as follows: "4. 2. Facilities:Protection Systems that (1) are not facilities used in the local distribution of electricity, (2) are facilities and control systems necessary for operating an interconnected electric energy transmission network, and (3) are any of the following:"This revision is necessary to capture the limits that Congress placed on FERC, NERC, and the Regional Entities in developing and enforcing mandatory reliability standards. Specifically, Section 215(i) of the Federal Power Act provides that the Electric Reliability Organization (ERO) "shall have authority to develop and enforce compliance with reliability standards for only the Bulk-Power System." And, Section 215(a)(1) of the statute defines the term "Bulk-Power System" or "BPS" as: (A) facilities and control systems necessary for operating an interconnected electric energy transmission network (or any portion thereof); and (B) electric energy from generation facilities needed to maintain transmission system reliability. The term does not include facilities used in the local distribution of electric energy." With this language, Congress expressly limited FERC, NERC, and the Regional Entities' jurisdiction with regard to local distribution facilities as well as those facilities not necessary for operating a transmission network. Given that these facilities are statutorily excluded from the definition of the BPS, reliability standards may not be developed or enforced for facilities used in local distribution. In Order No. 672, FERC adopted the statutory definition of the BPS. In Order No. 743-A, issued earlier this year, the Commission acknowledged that "Congress has specifically exempted 'facilities used in the local distribution of electric energy'" from the BPS definition. FERC also held that to the extent any facility is a facility used in the local distribution of electric energy, it is exempted from the requirements of Section 215. In Order No. 743-A, FERC delegated to NERC the task of proposing for FERC approval criteria and a process to identify the facilities used in local distribution that will be excluded from NERC and FERC regulation. The critical first step in this process is for NERC to propose criteria for approval by FERC to determine which facilities are used in local distribution, and are therefore not BPS facilities. The criteria to be developed by NERC must exclude any facilities that are used in the local distribution of electric energy, because all such facilities are beyond the scope of the statutory definition of the BPS, which establishes the limit of FERC and NERC jurisdiction. Accordingly, it is critical that NERC draft the new PRC-005-2 standard to expressly exclude facilities used in local distribution. NERC must also expressly exclude from PRC-005-2 those facilities "not necessary for operating an interconnected electric energy transmission network (or any portion thereof)". Similar to the local distribution exclusion, the facilities not necessary for operating a transmission network are not part of the BPS and therefore must be expressly excluded from the standard. We understand, but disagree with, the argument that, because the FPA clearly excludes local distribution facilities and facilities necessary for operating an interconnected electric transmission network from FERC, NERC, and Regional Entity jurisdiction, it is not necessary to expressly exclude these facilities again in reliability standards. This approach might be legally accurate, but could lead to significant confusion for entities attempting to implement the new PRC-005-2 standard. There are numerous examples of Regional Entities, particularly WECC, attempting to assert jurisdiction over such facilities, and regulated entities face significant uncertainty as to which facilities they should consider as within jurisdiction. Clarifying FERC, NERC, and Regional Entity jurisdiction in the BES definition, even if such clarification is already provided in the FPA, would avoid such problems under the new PRC-005-2 standard. Again, we appreciate the work NERC has put in so far on a new Standard. We look forward to working within the drafting process to help implement our recommended revision.

Response: Thank you for your comment.

Other than the requirement relating expressly to UFLS/UVLS Protection Systems, the Applicability currently expressly addresses Protection Systems applied for the purpose of detecting BES faults.

To the degree that such Protection Systems may be located on non-BES components, and as the Applicability addresses UFLS/UVLS systems, the SDT has received the following position from NERC Legal:

While UFLS and UVLS equipment are located on the distribution network, their job is to protect the Bulk Electric System. This is not beyond the scope of NERC's 215 authority.

FPA section 215(a) definitions section defines "bulk-power system as (A) facilities and control systems necessary for operating an interconnected electric energy transmission network (or any portion thereof)." That definition then is limited by a later statement which adds the term bulk-power system "does not include facilities used in the local distribution of electric energy." Also, section 215 covers users, owners, and operators of bulk-power facilities.

UFLS and UVLS (when the UVLS is installed to prevent system voltage collapse or voltage instability for BES reliability) are not "used in the local distribution of electric energy" despite their location on local distribution networks. Further, if UFLS/UVLS facilities were not covered by the Reliability Standards, then in order to protect the integrity of the BES during under-frequency or under-voltage events, that load would have to be shed at the transmission bus to ensure the load-generation balance and voltage stability is maintained on the BES.

Bonneville Power Administration		1. BPA understands that the VSLs for R3 are based on the percentage of unresolved maintenance issues that an entity has failed to initiate a resolution for. This approach penalizes an entity for having less unresolved maintenance issues. For example, if an entity has only one unresolved maintenance issue and it failed to initiate a resolution for it, it would have failed to initiate a resolution for 100% of its unresolved maintenance issues, which would be a severe VSL. If another entity had 100 unresolved maintenance issues, and it failed to initiate resolution on ten of them, it would have failed to initiate a resolution on 10% of its unresolved maintenance issues, which would be a high VSL. Most likely, the first entity is doing a better job with its maintenance than the second entity, but the first entity receives a more severe penalty. The VSL for R3 is not an accurate measurement of a maintenance program's effectiveness and needs to be revised. BPA recommends removing the entire "Unresolved Maintenance Issue" topic from the standard. 2. In Table 1-1, it is not clear when a microprocessor relay meets the requirement for internal self-diagnosis and alarming. It is not clear that any microprocessor relay with a relay failure alarm would meet this requirement. 3. BPA believes that it seems like an omission in Table 1-1 for unmonitored microprocessor relays, the verification of settings is not included as a maintenance activity. 4. BPA would also like to recommend clarifying language stating that the owner of the asset is the responsible entity.

Response: Thank you for your comments. **1. The SDT believes that, if a component cannot be returned to "good working order" during the performance of the maintenance program as defined within the entity's criteria, the maintenance program must include those actions necessary to restore the component (and thus the Protection System) to good working order. Therefore, the topic of "Unresolved Maintenance Issues" cannot be removed from the standard. The VSL for the old Requirement R3 (now Requirement R5) has been revised to indicate gradations on the actual count of violations of this requirement, rather than percentages.** **2. Microprocessor relay failure alarms meet this requirement as long as the alarm is sent back to a location where corrective action can be initiated.** **3. The first maintenance activity listed on Table 1-1 is to validate that relay settings are as specified and this statement is applicable to unmonitored microprocessor relays. The activity has been revised to clarify.** **4. The preface paragraphs for R1, R2, R3, R4, and R5 each state that the Transmission Owner, Generator Owner, and Distribution Provider are responsible for implementation of the associated requirements.**		
FirstEnergy		1. We remain concerned with the proposed draft version of Requirement R3 as well as the SDT developed statements in the Supplementary Reference & FAQ. The SDT's approach sends industry the wrong message; a message that entities should not go beyond what is in the text of the standards and that in some cases they can even be found non-compliant by failing to meet their own more stringent internal practice. We have sent NERC Staff and Drafting Team leaders a separate document detailing our concerns as well as proposed redlines to the standard. The separately provided document can be viewed as FE's ballot comments.

		2. FE supports the standard from a technical standpoint but offer the following additional comments and suggestions: A clarification to the supplementary reference document is necessary regarding Maintenance Activities specified for electromechanical lockout and/or tripping auxiliary devices, as specified in Table 1-5 of the standard. The standard states, “Verify electrical operation of electromechanical trip and auxiliary tripping devices” which must be performed every 6 years. A question was asked during the September 15th Webinar requesting clarification of what “verify electrical operation....” meant. The verbal response from the SDT member was that this involves verifying that the relay actuates, but does not require verification that its contacts changed state. However, the answer to the question at the bottom of page 29 and top of page 30 in the Supplementary Reference and FAQ (dated July 29, 2011) implies that checking the contacts is necessary. The following statement in the published answer makes this clarification request necessary; “Auxiliary outputs not in a trip path (i.e. annunciation or DME input) are not required, by this Standard, to be checked.” This statement implies that if outputs to annunciators and DME inputs do not need to be checked, then the other outputs do need to be checked. Verification of the auxiliary tripping relays appears to be covered in Table 1-5 of the standard under the "Unmonitored control circuitry associated with protective functions" section at 12 calendar years. Thus, we ask the SDT clarify in the supplementary reference the type of maintenance activities required for electromechanical lockout and/or tripping auxiliary devices to satisfy the requirements of Table 1-5 of the standard. Since the standard specifically dictates the output contacts verification for protective relays under Table 1-1, the output contacts of aux tripping relays is left up to interpretation. Therefore, we suggest the following statement be added after “Auxiliary outputs not in a trip path (i.e. annunciation or DME input) are not required, by this Standard, to be checked.” on page 30 of the document: “Auxiliary outputs that are in the trip path shall be maintained as detailed in Table 1-5 of the standard under the ‘Unmonitored control circuitry associated with protective functions" section’ at 12 calendar years.”

Response: Thank you for your comments. **1. The standard and the Supplementary Reference and FAQ document have been changed to address your concerns. Specifically, Requirement R1 part 1.3 has been removed; Requirement R3 has been revised so that, for time-based programs, entities shall comply with the tables; Requirement R4 has been added to address performance-based maintenance, and Requirement R5 has been added to address Unresolved Maintenance Issues.** **2. Output contacts and auxiliary tripping relays that are not part of a trip path or essential for proper operation of an SPS need not be tested per this standard. The Supplementary Reference and FAQ document will be revised as you suggest.**		
Southwest Power Pool Standards Review Group		1. Please update Appendix B, Drafting Team Members, of the Supplementary Reference document. 2. We request that the detail for the breaker failure protection for generator protection in the bulleted list at the bottom of page 31 and the top of page 32 of the Supplementary Reference document be removed. We are not sure what the SDT is looking for here since there are several types of breaker failure protection. 3. We ask that Section 4.2.5.4 of the draft standard under the Facilities be modified to read 'Protection Systems that trip the generator for generator-connected station service transformers for generators that are part of the BES.' 4. We suggest that Section 1.3 Data Retention be rewritten to provide clarification that no data prior to the date of the last audit need be retained.

Response: Thank you for your comments. **1. The list of SDT members has been updated.** **2. The preface to the list of relays to which you refer is as follows: "Examples of typical devices and systems that may directly trip the generator, or trip through a lockout relay may include but are not necessarily limited to:". The SDT was merely attempting to provide a list of possible relays that might need to be included. The list is not meant to be all inclusive nor do all relays of the types on the list necessarily need to be included.** **3. In consideration of your comment and those of others received, the SDT has revised Section 4.2.5.4 as requested.** **4. In order that a Compliance Monitor can be assured of compliance, the SDT believes that the Compliance Monitor will need the data of the most recent performance of the maintenance, as well as the data of the preceding one to validate that entities have been in compliance since the last audit (or currently, since the beginning of mandatory compliance). The SDT has specified the data retention in the posted standard to establish this level of documentation. This seems to be consistent with the current practices of several Regional Entities.**		
Florida Municipal Power Agency		The "Applicability" section is not consistent with the recent Y-W and Tri-State PRC-005 interpretation (Project 2009-17). The Applicability 4.2.1 states that the standard includes: "Protection Systems that are installed for the purpose of detecting faults on BES Elements (lines, buses, transformers, etc.)" whereas the Y-W and Tri-State interpretation basically says that "transmission Protection Systems" both detect AND trip BES Elements; Hence, the new standard alters the existing "and" statement in the Y-W and tri-State interpretation and eliminates the consideration of tripping BES Elements from applicability. This will have the consequence of including Protection Systems on step-down transformers that "look backwards" into the BES system as applicable to the standard. For instance, a distribution network fed from multiple transmission interconnections will have protective relaying (directional overcurrent most likely) to look backwards into the transmission system to trip the step-down transformer to prevent back-feed from the distribution network). This step-down transformer protection would be included in the new standard because it's purpose to the detect faults on the BES (event though the purpose of the protection is actually to protect overloading of the distribution and for worker safety on the BES); whereas the Y-W and Tri-State interpretation excludes that protection from the existing PRC-005-1 standard.

Response: Thank you for your comment. **The SDT believes that the Applicability as stated in PRC-005-2 is correct and that it supports the reliability of the BES. The SDT observes that the approved Interpretation addresses the term, "transmission Protection System", and notes that this term is not used within PRC-005-2; thus the interpretation does not apply to PRC-005-2. PRC-005-2 specifically addresses "Protection Systems that are installed for the purpose of detecting faults on BES Elements." Please see Section 2.3 of the Supplementary Reference and FAQ document for additional discussion.**		
Pepco Holdings Inc & Affiliates		Requirement 3 and the Supplementary Reference Document indicate that an entity should be held to its internal PSMP (especially for a time based program) even if the plan is more stringent than the NERC standard. This would be a deterrent for initiative and for excellence and punish utilities for going above the standards and performing best practices. It also tends to drive the industry to lowest common denominator practices. R3 and the accompanying Supplementary Reference Document should be appropriately revised to reflect that entities would only be held auditably accountable for the minimum requirements as stated in the standard and associated documents.
Response: Thank you for your comments. The standard and the Supplementary Reference and FAQ document have been changed to address your concerns. Specifically, Requirement R1 part 1.3 has been removed; Requirement R3 has been revised so that, for time-based programs, entities shall comply with the tables; Requirement R4 has been added to address performance-based maintenance, and Requirement R5 has been added to address Unresolved Maintenance Issues.		
MRO's NERC Standards Review Forum		a. Section 4.2.5.4 includes station service transformers for generator facilities. As currently written, the section includes all the protection systems for station service transformers for generators that are a part of the BES. It states, "Protection Systems for generator-connected station service transformers for generators that are part of the BES." Generating facilities may have transfer schemes on the auxiliary transformer to transfer equipment to a reserve transformer instead of tripping the unit. These protection systems should not be included in the Facilities for PRC-005-2, since the BES is not affected. Recommend changing Section 4.2.5.4 to read, "Protection Systems that trip the generator for generator-connected station service transformers for generators that are a part of the BES."

		b. Data Retention, Section 1.3 (concerning R2 and R3) requires an entity to retain the two most recent performances of each distinct maintenance activity. This is an unreasonable requirement and does not enhance reliability. Recommend the data retention be changed to require only the most recent (past) test record. An example exists where an entity recently registered and tested all their relays prior to registering. They have one set of documentation and not two. PRC-005-2 allows testing intervals of up to 12 calendar years. If we are required to have the two most recent tests, we could conceivably have to retain a relay test record for 24 years. Recommend retention to be the most current record or all records since the last audit.
		c. Table 1-5 requires a maintenance activity to, "Verify that each trip coil is able to operate the circuit breaker, interrupting device, or mitigating device." Recommend this be changed to, "Verify that each a trip coil is able to operate the circuit breaker, interrupting device, or mitigating device." Or alternately, change the wording to, "Electrically operate each interrupting device every 6 years." While requiring each trip coil to operate the breaker sounds good in theory, practically it creates issues in the field and may create more problems than it solves. The trip coils are located in the panel at the breaker and aren't configured to test independently. Isolating one trip coil from the other may include "lifting a wire" that may not get landed properly when the test is complete. Then, how do you prove for a compliance audit that both trip coils were independently tested to trip the breaker? Using an actual event only tests one coil and we may not know which coil tripped the device. To be compliant, it isn't practical to be able to track a real-time fault clearing operation as suggested on page 67 of the Supplementary Reference document. First, we don't know which trip coil operated, then we have a "one off" device in the substation that must be tracked separately with a different testing cycle from the other devices in the substation. The standard should focus on ensuring the control circuitry is intact and trips the breaker without injecting additional, unneeded risk to the BES.

		d. General comment under Table 1-5: We do extensive testing of the control circuit during commissioning and after a modification to the circuit. Testing of the control circuitry on a periodic basis is not needed. The wear and tear on the equipment from functional testing and the potential risk of the testing itself may create more issues than the benefits received from doing the tests. The functional test injects significant opportunities for human performance errors during the test (technician trips the wrong device, differential relay opens all protective devices for a bus instead of a breaker, technician bumps another relay, screw driver falls into another device, etc.) and latent errors after the test (i.e., if a wire was lifted during the test, was it landed back in proper location, was the relay tripping function activated after the test was completed or was the relay left in test mode, etc.). Request the drafting team provide a basis for requiring the functional test. Are there documented instances where the control circuitry caused a significant event on the BES? Many utilities, monitor circuit breakers for operations. If a breaker hasn't operated for a defined period of time, we set up a maintenance activity to operate the breaker (possibly to include a timing test to ensure the breaker clears in the proper amount of cycles) - this ensures the operating linkages aren't bound and the breaker will operate. Misoperations are already monitored and reported through PRC-004. Does recent misoperation data or TADS data indicate that control circuitry/trip coils are a problem within the protection and control system? The current version of PRC-005 doesn't require functional tests. What is the basis for requiring additional compliance documentation (additional functional testing)? A possible alternative: only perform testing following modifications or major maintenance (like breaker change outs or panel modifications).
		e. Change the text of "Standard PRC-005-2 - Protection System Maintenance" Table 1-5 on page 19, Row 3, Column 2 to: "12 calendar years". 1) The maximum maintenance interval for "Electromechanical lockout and/or tripping devices which are directly in a trip path from the protective relay to the interrupting device trip coil" should be consistent with the "Unmonitored control circuit" interval which is 12 calendar years.2) In order to test the lockout relays, it may be necessary to take a bus outage (due to lack of redundancy and associated stability issues with delayed clearing). Increasing the frequency of bus outages (with associated lines or transformers) will also increase the amount of time that the BES is in a less intact system configuration. Increasing the time the BES is in a less intact system configuration also increases the probability of a low frequency, high impact event occurring. Therefore, the Maximum Maintenance Interval should be 12 years for lockout relays.

		f. In the background section of the implementation plan in item two it states "..it is unrealistic for those entities to be immediately in compliance with the new intervals." A recent compliance application notice (CAN-0012) indicated that auditors are requiring entities to include proof of compliance to maintenance intervals by providing the most recent and prior maintenance dates. Please provide clarity on CAN-0012 is applicable to PRC-005-2?
		g. The purpose statement of the standard seems to be inconsistent with the applicability section. To correct this it is suggested that the words "affecting the reliability" be removed from the purpose statement
		h. For consistency with the changes from 3 months to 4 months in the tables of the standard it is suggested that the second item in Table 1-4(b) be changed from 6 calendar months to 7 calendar months
		i. In the tables for dc Supply the term "unit-to-unit" is used along with "intercell" when referring to measurement of connection resistance. From the applicable IEEE standards (e.g. IEEE 450) the standard terminology seems to be "intercell". It is recommended that the "unit-to-unit" term be removed to avoid confusion regarding what is to be verified.
		j. The NSRF would like to extend our thanks to the drafting team. The 96 page Supplementary Reference document allows us to discuss these issues before the standard is approved, instead of as a potential violation later. Excellent job!

Response: Thank you for your comments.

a) **The SDT has modified paragraph 4.2.5.4 as you suggest.**

b) **In order that a Compliance Monitor can be assured of compliance, the SDT believes that the Compliance Monitor will need the data of the most recent performance of the maintenance, as well as the data of the preceding one to validate that entities have been in compliance since the last audit (or currently, since the beginning of mandatory compliance). The SDT has specified the data retention in the posted standard to establish this level of documentation. This seems to be consistent with the current practices of several Regional Entities.**

c) **The description of the configuration of the second trip coil on circuit breakers you have provided is not typical of the redundant approach taken by most entities. Typically, second trip coils are electrically isolated from the first trip coil and are often fed by a separately fused dc control circuit with different relay trip output, lockout and auxiliary tripping contacts utilized in each circuit. The SDT believes that it is important that redundant trip paths be maintained within the indicated interval, and the prescribed interval already considers the reliability benefits of redundant equipment.**

d) **The SDT believes that it is possible to manage the risks that you describe and that performance of these trip path verifications will be an overall benefit to the reliability of the BES.**

e) **The SDT believes that electromechanical lockout relays need periodic operation. As such, these devices are required to be exercised at the same 6 year interval required for electromechanical relays. The SDT recognizes the risk of human error trips when working with testing of lockout devices but believes these risks can be managed. Performance-based maintenance is an option if you want to extend your intervals beyond 6 years. The SDT, however, has modified Table 1-5 to remove other auxiliary relays, etc, from this activity, and clarified that the verification of such.**

f) **The CAN cited applies to PRC-005-1, not PRC-005-2. The SDT intends that the Implementation plan associated with PRC-005-2 will govern compliance to PRC-005-2 during the transition to the new standard.**

g) **The purpose of the standard expresses the general intent of the standard, and is further clarified by the Applicability.**

h) **The SDT believes that the 6-month interval is appropriate for these activities.**

i) **The term "unit-to-unit" is used for the conductor utilized to connect one multi-celled battery jar to an adjacent multi-celled battery jar. The SDT does not believe this terminology causes wide spread confusion.**

j) **Thank you.**

Arizona Public Service Company		While we are supportive of the changes the SDT has made, APS is concerned the draft Standard will not give entities the flexibility to continue to improve reliability based on changing industry norms and best practices. In addition, when technology changes for the better, industry will need the flexibility to optimize use of the new technology. Lastly, the more often protection equipment is taken out of service for testing, the more often the line is vulnerable. The balance between the correct amount of testing and correct amount of time the equipment is in the field and in service is an important consideration when assuring the reliability of the BES. APS suggests the general principles of the following two papers be applied to more equipment types than microprocessor relays with self test capabilities. 1) 'An Improved Model for Protective-System Reliability,' P.M. Anderson and S.K. Agrawal, Power Math Associates, Inc., IEEE Transactions on Reliability, Volume 41, No. 3, September 1992;2) 'Philosophies for Testing Protective Relays,' J.J. Kumm, et. al., Schweitzer Engineering Laboratory, Inc., 48th Annual Georgia Tech Protective Relaying Conference, May 1994.
Response: Thank you for your comments. FERC Order 693 and the approved SAR assign the SDT to develop a standard with maximum allowable intervals and minimum maintenance activities. Wherever possible, the SDT has provided entities with the flexibility to utilize capabilities of emerging technologies by using condition-based maintenance where effective, and also by using performance-based maintenance should an entity wish to modify their intervals based on past performance.		
Southern Company Generation		1) For Table 1-1 and Table 3, consider adding "(internal to the relay)" to the microprocessor relay 6 calendar year maintenance activities to clarify that these maintenance activities are not related to items external to the relay).
Response: Thank you for your comments. Since the component type being addressed is the protective relay itself, it seems that the clarification you request is unnecessary.		

Tacoma Power		1. The implementation plan for R2 and R3 is unclear on whether each maintenance activity has its own implementation schedule. The implementation plan can also be interpreted to mean that the implementation schedule for a given protection system component is driven by the smallest maximum maintenance (allowable) interval. For example, for unmonitored communications systems, it is unclear whether all maintenance activities indicated in Table 1-2, including those corresponding to 6 calendar years, must be completed on all unmonitored communications systems by the first calendar quarter 15 months following applicable regulatory approval, or if this timeline only applies to the maintenance activity specified in Table 1-2 corresponding to a maximum maintenance interval of 4 calendar months.
		2. Assuming that there is a different implementation schedule for different maintenance activities for some protection system component types (namely station DC supply and communication systems), the middle bullet on page 1 of the implementation plan does not seem to consider that it may not be possible to identify whether some protection system components are completely being addressed by PRC-005-2 or the Program developed for the previous standards. In other words, during implementation, some maintenance activities for the same protection system component may be addressed by PRC-005-2, while other maintenance activities may be addressed by the Program developed for the previous standards.
		3. It is unclear whether control circuitry (trip paths) from protective relays that respond to mechanical quantities is included. This issue is addressed in the supplementary reference but is vague in the draft standard itself.
		4. This draft of PRC-005-2 requires the Protection System Maintenance Program (PSMP) to “include all applicable monitoring attributes and related maintenance activities” per the Tables and requires an entity to “implement and follow its PSMP.” Under the draft standard, it is unclear whether an entity has to document in the PSMP and/or maintenance records how they accomplish(ed) the maintenance activities or simply to indicate that the maintenance activities are included and have been completed within the defined intervals. It is clear that entities are afforded some latitude in how they conduct the required maintenance activities. However, the level of detail required to document (1) how an entity chooses to perform the maintenance activities and (2) that applicable maintenance activities have been completed is not clear.

		5. In Table 1-2, there is a maintenance activity related to communication systems to “verify essential signals to and from other Protection System components.” It is unclear if this statement is referring to control circuitry associated with the communication system end devices, end device input and output operation (as in Table 1-1 for protective relays), or something else. It is recommended that the requirement be to “verify operation of communication system inputs and outputs that are essential to proper functioning of the Protection System.” This language is consistent with that used for protective relays in Table 1-1.
		6. Referring to Table 1-2, it is unclear whether an entity has the sole authority decide which ‘performance criteria’ are ‘pertinent.’ Additionally, it is unclear if an entity must document the ‘communications technology applied’ and the associated ‘performance criteria’ in its PSMP.
		7. In Table 1-4, it is unclear if there is a distinction between the terms ‘resistance’ and ‘ohmic values.’ If there is a distinction, then this distinction should be clarified.
		8. In Table 1-4, it is unclear if there is a distinction between the terms ‘battery terminal connection resistance’ and ‘unit-to-unit connection resistance.’ If there is a distinction, then this distinction should be clarified.
		9. In Table 1-4, replace the term ‘resistance’ with ‘impedance.’
		10. Recommend that the 6 calendar month interval in Table 1-4(b) be lengthened to 18 calendar months to be more consistent with similar maintenance activities for other battery types. At minimum, lengthen the interval to at least 7 calendar months in a similar way that 3 calendar months was lengthened to 4 calendar months for other maintenance activities.

		11. Referring to Table 1-5, no periodic maintenance is required for "control circuitry whose continuity and energization or ability to operate are monitored and alarmed." It is unclear whether or not it is acceptable to verify DC voltage at the actuating device trip terminals at least once every 12 calendar years for "unmonitored control circuitry associated with protective functions." It is recommended that periodically verifying DC voltage in this manner be an acceptable means of accomplishing the maintenance activity identified in Table 1-5 for unmonitored control circuitry associated with protective functions.
		12. Referring to 4.2. Facilities of the draft standard, it is unclear whether protection systems for transformers that step down from over 100kV to below 15kV are applicable to the standard. Even if there are normally-open distribution feeder ties for purposes of transferring load in a make-before-break fashion, these transformers are generally not considered BES elements.
		13. Referring to 4.2.5 of the draft standard, it is unclear whether protection for generator excitation systems are applicable to the standard.
		14. It is unclear whether external timing relays (e.g., Zone 2) are considered control circuitry components (like lockout and auxiliary relays) or protective relay components.
Response:	**Thank you for your comments.**	
	1. The SDT agrees with your observation and has changed the relevant parts of the Implementation plan to clarify that they apply to the maintenance activities for the relevant maintenance intervals.	
	2. The SDT agrees with your observation and revised the Implementation plan to clarify.	

	3. The trip paths from protective relays that respond to mechanical quantities and are intended to detect faults are a part of the Protection System control circuitry. The sensing elements are omitted from PRC-005-2 testing requirements because the SDT is unaware of industry recognized testing protocols for these sensing elements. The SDT believes that Protection Systems that trip (or can trip) the BES should be included. This position is consistent with the currently-approved PRC-005-1, consistent with the SAR for Project 2007-17, and the SDT understands this to be consistent with the position of FERC staff. Note that trip signals from devices sensing mechanical parameters not directly indicative of an electrical fault need not be tested per this standard.
	4. The SDT has removed parts 1.1 and 1.3 from Requirement R1, addressing part of your comment. The SDT agrees that PRC-005-2 allows some leeway in how an entity fulfills the testing requirements of the standard. Section 15 of the Supplementary Reference and FAQ document provides numerous examples of possible testing techniques for the various component types making up a Protection System. An entity's PSMP should clearly define how the testing requirements of the standard are fulfilled. The Measures for each requirement, as well as Section 15.8 of the Supplementary Reference and FAQ document, provide some examples of possible compliance documentation for completion of testing.
	5. The SDT agrees with your suggestion and has changed the standard accordingly.
	6. The entity has the authority to establish its own acceptable performance criteria. This criteria does not need to be in the PSMP, but should reside somewhere within the maintenance documentation.
	7. As utilized on Table 1-4, the term "ohmic value" is a generic reference to the measurement of a battery cell or units ability to pass current flow. This may be done using conductance, resistance or impedance measurements; the various battery test equipment manufacturers use different measurement methods and the term "ohmic value" is meant to be technology neutral. See FAQ on page 78 of the Supplementary Reference and FAQ document. The term "resistance" as used in Table 1-4 refers specifically to the dc resistance of the battery terminal connections and the battery intercell/inter-unit physical connectors. See related FAQ on pages 74-75 of the Supplementary Reference and FAQ document.

	8. Battery terminal connection resistance is a measurement of the resistance of a connection at a battery terminal. Battery intercell or unit-to-unit connection resistance is a measurement of the resistance of the external conductor interconnecting two adjacent battery cells or two adjacent multi-cell battery units. The SDT believes these are common battery maintenance terms used throughout the industry.
	9. The SDT disagrees and believes that resistance as used in Table 1-4 is the appropriate term for the parameters to be measured and is consistent with standard battery system maintenance terminology.
	10. The SDT disagrees with your recommendation to standardize maintenance intervals between different battery types that have distinctly different failure mechanisms. See related FAQ on pages 80-81 of the Supplementary Reference and FAQ document for further discussion of requirements for ohmic measurements of VRLA batteries. Concerning your recommendation to allow for 7 calendar months, the SDT believes that the six-month interval specified is appropriate.
	11. The SDT has modified this specific portion of the Table, and believes that the modifications address your concern. Please see Section 15.3 of the Supplementary Reference and FAQ document for a discussion of this topic.
	12. The standard does not include the Protection Systems for transformers that step down from over 100kV to below 15kV if these transformers are not BES elements. If Protection Systems are installed for purposes of detecting Faults on BES elements, these Protection Systems are included.
	13. Paragraph 4.2.5.1 indicates that the excitation system protection system would only be in scope if the excitation system generates signals that trip the generator output breaker either directly or via lockout or auxiliary tripping relays.
	14. As timing is critical to proper Protection System function, timers are considered protective relays.

Progress Energy		1. Standard, Table 1-4(a), second sentence under Component Attributes, should state "Protection System Station dc supply for non-BES interrupting devices for SPS or non-distributed UFLS and UVLS systems are excluded...." As written, the statement does not include the phrase "UFLS and." I believe it should. 2. Supplemental, Section 13, 2nd paragraph, first sentence should state: "...device match the minimum requirements listed in Tables 1 and 3."
Response: Thank you for your comments. **1. The SDT agrees. Table 1-4(a) has been modified as you suggest; this text has been relocated to the header of the table.** **2. The SDT agrees and has modified the Supplementary Reference and FAQ document as you suggest.**		

Western Area Power Administration		Comment 1:Western Area Power Administration does not agree with penalizing utilities for implementing maintenance programs that exceed the requirements defined in the NERC Standard PRC-005-2 maintenance tables. Although the intent of the language in the Supplementary Reference and FAQ document may have been to allow evolving maintenance programs to include condition-based and performance based maintenance in their programs, penalizing utilities with more stringent programs will more likely provide a disincentive for program development. Utilities will discontinue any additional maintenance activities that could put them at risk for non-compliance. This will cause maintenance programs to stagnate and new maintenance ideas to improve system reliability to not be implemented. It is the opinion of the Western Area Power Administration that the following text should be removed from the Supplementary Reference and FAQ document and entities should be audited to the minimum requirement of the standard regardless of their individual programs. Recommendation: Remove the following text from the Supplementary Reference & FAQ document:1. Page 26 - The bullet "If your PSMP (plan) requires more activities then you must perform and document to this higher standard." 2. Page 27 - The bullet "If your PSMP (plan) requires activities more often than the Tables maximum then you must perform and document those activities to your more stringent standard." 3. Page 27 - The paragraph "It has been noted here that an entity may have a PSMP that is more stringent than PRC-005-2. There may be any number of reasons that an entity chooses a more stringent plan than the minimums prescribed within PRC-005-2, most notable of which is an entity using performance based maintenance methodology. (Another reason for having a more stringent plan than is required could be a regional entity could have more stringent requirements.) Regardless of the rationale behind an entity's more stringent plan, it is incumbent upon them to perform the activities, and perform them at the stated intervals, of the entity's PSMP. A quality PSMP will help assure system reliability and adhering to any given PSMP should be the goal." Revise R3 of PRC-005-2 and add statement to the Supplementary Reference & FAQ document.1. R3: Each Transmission Owner, Generator Owner and Distribution Provider shall implement and follow its PSMP plan within the prescribed intervals of Tables 1, 2 and 3. and correct any unresolved maintenance issues.2. FAQ: Any utility maintaining Protection System equipment that exceeds the requirements and tables because of historical testing data and/or failure documentation should not be held non-compliant or penalized for not meeting its PSMP, as long as they do not exceed the maximum allowable intervals or meet the minimum maintenance activities of the standard.

		Comment 2:R3 of PRC-005-2 states "Each Transmission Owner, Generator Owner, and Distribution Provider shall implement and follow its PSMP and initiate resolution of any unresolved maintenance issues." The Western Area Power Administration would like more clarification on potential data request for requirement R3 of PRC-005-2. Because the requirement uses the term initiates resolution, the entity could make the assumption that providing just a list of maintenance request for unresolved maintenance issues will serve to prove compliance. Although it would seem implied that whatever method used to initiate resolution would lead to some type of corrective maintenance, the requirement does not make that absolutely clear. To ensure the maintenance practices are meeting the intent of the requirement, the requirement needs to clarify the expectations for completing corrective maintenance that was initiated to resolve maintenance issues. Recommendation: Add additional clarification to Supplementary Reference & FAQ document to further clarify expectation for this requirement.

Response: Thank you for your comments.

1. **The standard and the Supplementary Reference and FAQ document have been changed to address your concerns. Specifically, Requirement R1 part 1.3 has been removed; Requirement R3 has been revised so that, for time-based programs, entities shall comply with the tables; Requirement R4 has been added to address performance-based maintenance, and Requirement R5 has been added to address Unresolved Maintenance Issues.**
2. **Additional clarification has been added to the Supplementary Reference and FAQ document. Additional examples have also been added to the Measure for this Requirement.**

PacifiCorp		1. The data retention requirement for producing evidence that the entity performed maintenance for the 2 most recent maintenance intervals is excessive. As an example, if a registered entity's maintenance/test interval is 12 years, such entity may be required to keep records for up to 35 years. PacifiCorp recommends a revision to the data retention requirement to provide for either a maximum retention period of 10 years or, in cases in which the interval exceeds 10 years, the most recent maintenance/test cycle only. 2. The requirement to identify all PTs is very onerous and not needed to verify maintenance compliance and therefore serves a limited reliability benefit. PacifiCorp believes that, as long as a registered entity can demonstrate that it can verify that all CTs/PTs providing input into a Protection System have been tested and maintained according to its established procedures, then a separate and independent requirement to maintain a list of these devices is not necessary. As an example, if an entity performed their protection system maintenance on a "scheme" basis, and as part of that maintenance documentation identified all CT's and PT's providing input into the scheme and verified their accuracy, then having a "master list" would provide no benefit. A list of all CT's associated with one device such as a circuit breaker would have little value in this case as these CT's may provide input into multiple relay schemes and would not be maintained on an individual circuit breaker basis.

Response: Thank you for your comments.

1. **In order that a Compliance Monitor can be assured of compliance, the SDT believes that the Compliance Monitor will need the data of the most recent performance of the maintenance, as well as the data of the preceding one to validate that entities have been in compliance since the last audit (or currently, since the beginning of mandatory compliance). The SDT has specified the data retention in the posted standard to establish this level of documentation. This seems to be consistent with the current practices of several Regional Entities.**
2. **The SDT does not believe the current standard contains a "separate and independent requirement to maintain a list of these devices". As your comment correctly indicates, if an entity can provide evidence that the inputs from all CTs and PTs are accurately being received by the associated relays for in scope Protection Systems, this is acceptable. It is up to the entity to best determine how to track this – whether by a "master list" of CTs and/or PTs, on a "scheme" basis, by physical location of the instrument transformer, or some other effective tracking method.**

Saft America, Inc.		Saft Comments on NERC Standard PRC-005-2 - Protection System Maintenance - Please find herein Saft's comments to NERC PRC-005-2 regarding ohmic testing of Nickel-Cadmium (NiCad) batteries. As drafted, the proposed NERC Standard PRC-005-2 will lead to the removal of high quality, reliable NiCad battery power units from Protection Systems, which is counter to the NERC stated purpose of PRC-005-2, which is to 'document and implement programs for the maintenance of all Protection Systems affecting the reliability of the Bulk Electric System (BES) so that these Protection Systems are kept in working order.' There is broad consensus within the battery industry that ohmic testing of Valve Regulated Lead-Acid (VRLA) batteries provides a means for trending the condition of the battery over time. Such a consensus does not exist for Vented Lead-Acid (VLA) batteries, because ohmic measurements are more difficult to trend, thereby providing a go/no-go assessment of the battery's availability at that precise moment in time, rather than a measure of VLA battery condition. Ohmic testing of NiCad batteries provides a similar go/no-go assessment to ohmic testing of VLA batteries. As with VLA batteries, ohmic testing of NiCad batteries does not provide meaningful trending information, but rather provides a status update of battery condition at a specific moment in time. Due to the similar information provided by ohmic testing of VLA and NiCad batteries, Saft recommends that ohmic testing of NiCad batteries be included under the Maintenance Activities for NiCad batteries. Specifically, Saft recommends that NERC add the following language to the Maintenance Activities column in Table 1-4(d), 'Verify that the station battery can perform as designed by evaluating the measured cell/unit internal ohmic values to station battery baseline', at a maximum maintenance interval of 18 months, as in the requirement for VLA batteries noted in Table 1-4(a).

Response: Thank you for your comments.

The SDT disagrees. The SDT is aware of studies that indicate a correlation between ohmic measurements and battery condition (or remaining life) for VLA and VRLA batteries when trended against a baseline ohmic measurement taken when the battery was new. These same studies concluded no such correlation exists for NiCad batteries. We are unaware of any published studies that conclude otherwise for NiCad batteries. The standard does not favor one technology over another but simply allows flexibility in testing techniques when the attributes of a technology allow for technically justifiable application of that flexibility and achieve the objective of the standard.

Nebraska Public Power District		a. Section 4.2.5.4 includes station service transformers for generator facilities. As currently written, the section includes all the protection systems for station service transformers for generators that are a part of the BES. It states, "Protection Systems for generator-connected station service transformers for generators that are part of the BES." Generating facilities may have transfer schemes on the auxiliary transformer to transfer equipment to a reserve transformer instead of tripping the unit. These protection systems should not be included in the Facilities for PRC-005-2, since the BES is not affected. Recommend changing Section 4.2.5.4 to read, "Protection Systems that trip the generator for generator-connected station service transformers for generators that are a part of the BES."
		b. Section 1.3 requires an entity to retain the two most recent performances of each distinct maintenance activity. This is an unreasonable requirement and does not enhance reliability. Recommend the data retention be changed to require only the most recent test record. An audit should be focused on the present day and not in the past. Is an entity compliant today and not can we find a way to issue a fine for something in the past? An example exists where an entity recently registered and tested all their relays prior to registering. They have one set of documentation and not two. Why should they be forced into testing again and incurring additional expense for customers only to have two tests available for an auditor? This does not enhance reliability. PRC-005-2 allows testing intervals of up to 12 calendar years. If we are required to have the two most recent tests, we could conceivably have to retain a relay test record for 24 years! Hypothetically, if we have a test record from ten years ago, but we don't have the record from 24 years ago, how does that adversely affect the reliability of the BES today? The standard should focus on - Are we compliant today?

		c. Table 1-5 requires a maintenance activity to, “Verify that each trip coil is able to operate the circuit breaker, interrupting device, or mitigating device.” Recommend this be changed to, “Verify that a trip coil is able to operate the circuit breaker, interrupting device, or mitigating device.” Or alternately, change the wording to, “Electrically operate each interrupting device every 6 years.” While requiring each trip coil to operate the breaker sounds good in theory, practically it creates issues in the field and may create more problems than it solves. The trip coils are located in the panel at the breaker and aren’t configured to test independently. Isolating one trip coil from the other may include “lifting a wire” that may not get landed properly when the test is complete. Then, how do you prove for a compliance audit that both trip coils were independently tested to trip the breaker? Using an actual event only tests one coil and we may not know which coil tripped the device. To be compliant, it isn’t practical to be able to track a real-time fault clearing operation as suggested on page 67 of the Supplementary Reference document. First, we don’t know which trip coil operated, then we have a “one off” device in the substation that must be tracked separately with a different testing cycle from the other devices in the substation - this is a recipe for a compliance violation. The standard should focus on ensuring the control circuitry is intact and trips the breaker without injecting additional, unneeded risk to the BES.

		d. General comment under Table 1-5: We do extensive testing of the control circuit during commissioning and after a modification to the circuit. Testing of the control circuitry on a periodic basis is not needed. The wear and tear on the equipment from functional testing and the potential risk of the testing itself may create more issues than the benefits received from doing the tests. The functional test injects significant opportunities for human performance errors during the test (technician trips the wrong device, differential relay opens all protective devices for a bus instead of a breaker, technician bumps another relay, screw driver falls into another device, etc.) and latent errors after the test (i.e., if a wire was lifted during the test, was it landed back in proper location, was the relay tripping function activated after the test was completed or was the relay left in test mode, etc.). Request the drafting team provide a basis for requiring the functional test. Are there documented instances where the control circuitry caused a significant event on the BES? Many utilities, including us, monitor our circuit breakers for operations. If a breaker hasn't operated for a defined period of time, we set up a maintenance activity to operate the breaker (possibly to include a timing test to ensure the breaker clears in the proper amount of cycles) - this ensures the operating linkages aren't bound and the breaker will operate. We have many maintenance activities performed on devices for the BES that do not require a NERC standard. If a utility chooses not to perform best practice maintenance, customers will experience more frequent and longer outages. The utility will receive customer feedback on outages which should translate into the utility increasing its maintenance. In other words, we don't have to include a functional test as a NERC requirement. Misoperations are already monitored and reported through PRC-004. Does recent misoperation data or TADS data indicate that control circuitry/trip coils are a problem within the protection and control system? The current version of PRC-005 doesn't require functional tests. What is the basis for requiring additional compliance documentation (additional functional testing)? A possible alternative: only perform testing following modifications or major maintenance (like breaker change outs or panel modifications).

		e. Recommend NERC provide training specifically on how to audit PRC-005-2 to auditors in all eight Regional Entities. PRC-005 is the most violated standard since enforcement began on June 18, 2007. This is an excellent opportunity for NERC to get all eight regions on the same page for what to audit. NERC provides training on standard auditing guidelines and sample selection, but doesn't provide training on how to audit specific standards. RSAW's and CAN's have been an attempt to get consistency across the regions, but differences are still obvious. NERC is in the perfect position to observe potential violations (PV) from an auditor and as a PV is written that goes beyond the standard or is not in accordance with the initial training; NERC can dismiss the PV and retrain the auditor. Auditors aren't perfect, nor are any of us. Training is a basic tool for the auditor to perform their job properly.
Response: Thank you for your comments **a) The SDT has modified paragraph 4.2.5.4 as you suggest.** **b) In order that a Compliance Monitor can be assured of compliance, the SDT believes that the Compliance Monitor will need the data of the most recent performance of the maintenance, as well as the data of the preceding one to validate that entities have been in compliance since the last audit (or currently, since the beginning of mandatory compliance). The SDT has specified the data retention in the posted standard to establish this level of documentation. This seems to be consistent with the current practices of several Regional Entities.** **c) The description of the configuration of the second trip coil on circuit breakers you have provided is not typical of the redundant approach taken by most entities. Typically, second trip coils are electrically isolated from the first trip coil and are often fed by a separately fused dc control circuit with different relay trip output, lockout and auxiliary tripping contacts utilized in each circuit. The SDT believes that it is important that redundant trip paths be maintained within the indicated interval, and the prescribed interval already considers the reliability benefits of redundant equipment.** **d) The SDT believes that it is possible to manage the risks that you describe and that performance of these trip path verifications will be an overall benefit to the reliability of the BES.** **e) The SDT will forward this comment to NERC Compliance for their consideration.**		
Exelon		
Texas		(1) General - defined terms need to be capitalized throughout this standard.

Reliability Entity		(2) Requirement R3 only addresses initiation of resolution to any Unresolved Maintenance Issues. Requirement R3 should require completion of corrective action to deal with Unresolved Maintenance Issues within a reasonable timeframe.
		(3) Section 1.3, Data Retention, should require each entity to keep all versions of its PSMP that were in effect since its last compliance audit, in order to demonstrate compliance at all relevant times (not just the current version).
		(4) In the Severe VSL for R2, add “Annually” to the second bullet under part 5.
		5) The VSLs for R3 should contain a time frame (annual?). The second part of these VSLs should refer to initiation and completion of resolution of Unresolved Maintenance Issues. (See comment on Requirement R3 above.)
		(6) Consider making the R3 VSLs based on a percent of the number of maintenance activities required by the PSMP in a stated time period, rather than on a percent of the total number of Components.
		(7) There is no maintenance activity listed to verify that protection system component settings meet the design intent of the protection system. In other words, there is no required activity to confirm that the “specified” settings are correct and appropriate. This introduces a potential reliability gap into the Protection System maintenance program.
		(8) In Table 1-1, the term “acceptable measurement of power system input values” is somewhat vague. A tolerance value or reference to industry standards should be provided.
		(9) In Table 1-3, the activity should include verifying that the current and voltage signal values are within design tolerances, not just that signal values are present.
		(10) In Table 1-4(a) Component Attributes - the reference to UFLS systems is missing in the exclusion that refers to UVLS systems. (UFLS is included in Tables 1-4(b) through 1-4(d).)

		(11) In table 1-4(f), there should be a reference to “alarming” in addition to “monitoring” in the first cell of the next-to-last row
		(12) In table 1-4(f), why is the last row limited to VRLA station batteries? Should the same exclusion apply to VLA batteries?
		(13) In Table 1-5, a “12 calendar year” interval is too long for “Unmonitored control circuitry associated with SPS” and “Unmonitored control circuitry associated with protective functions.” We suggest this be changed to 6 years. Similar unmonitored attributes related to battery maintenance have a 6 calendar year interval.
		(14) In Table 2, the phrase “location where corrective action can be initiated” is unclear, and we suggest that a more definitive description be used. Also, why is the word “DETECTION” in all-caps?
		(15) In Table 3, the maintenance activity should include verifying that Protection System Component settings meet the design intent of the Protection System. For example, any reclosing function should be disabled on UFLS and UVLS relay systems.
		(16) In Table 3, In Table 1-1, the term “acceptable measurement of power system input values” is somewhat vague. A tolerance value or reference to industry standards should be provided.
		(17) The Implementation Plan is overly long and complicated. Entities (including Regional Entities) will have to track and apply multiple versions of this standard for 14 years. It would be preferable to have a much shorter implementation plan, so that only one version of the standard will be applicable, recognizing that for some Components no action will be required under the standard for a number of years.
Response:	**Thank you for your comments.**	
	1. The SDT will attempt to properly capitalize defined terms throughout the standard.	

	2. The SDT specifically chose the phrase "initiate resolution" because of the concern that many more complex Unresolved Maintenance Issues might require greater than the remaining maintenance interval to resolve. For example, a problem might be identified on a VRLA battery during a 6 month check. In instances such as one that requiring battery replacement as part of the long term resolution, it is highly unlikely that the battery could be replaced in time to meet the 6 calendar month requirement for this maintenance activity. The SDT does not believe entities should be found in violation of a maintenance program requirement because of the inability to complete a remediation program within the original maintenance interval. The SDT does believe corrective actions should be timely but concludes it would be impossible to postulate all possible remediation projects and therefore, impossible to specify bounding time frames for resolution of all possible Unresolved Maintenance Issues or what documentation might be sufficient to provide proof that effective corrective action has been initiated. The SDT has clarified the intent of the requirement to initiate resolution of Unresolved Maintenance Issues by including it separately as Requirement R5 and revising the language such that the responsible entity must demonstrate its efforts to correct Unresolved Maintenance Issues.
	3. The SDT agrees with your observation and has modified the data retention requirements accordingly.
	4. The SDT agrees with your observation and has modified VSL for Requirement R2 accordingly.
	5. The percentages relate to the number of violations of the respective requirement reported within the compliance monitoring period relative to the number of components within that component type. PRC-005-2 only requires the entity "… initiate resolution" of the issue found. The SDT recognizes that performance of the activities necessary to resolve an issue are entirely dependent upon the circumstances surrounding that issue and, consequently, will require varying amounts of resources and time to complete the process. It is for this reason the SDT crafted the requirement to only require initiation of the process.
	6. The SDT disagrees. The entity must complete all required activities on any specific component in order to be compliant, regardless of the number of activities scheduled for that component.
	7. The SDT believes that adequacy of settings is more properly a design issue and should not be included in a maintenance standard.

	8. The SDT believes it is more appropriate for entities themselves to establish acceptance criteria that meet the performance requirements necessary for the proper operation of their Protection Systems.
	9. The action, "verify" is specified within the PSMP definition as "Determine that the component is functioning correctly." Therefore, the SDT believes that the suggested change is unnecessary.
	10. The SDT agrees. Table 1-4(a) has been modified as you suggest. The modified text has been moved to the header of the tables.
	11. The SDT agrees. Table 1-4(f) has been modified as you suggest.
	12. The SDT agrees. Table 1-4(f) has been modified as you suggest.
	13. The SDT disagrees and believes that the 12 year requirement for SPS's is in alignment with the Table 1-5 row 4 requirement for testing of unmonitored trip paths for control circuitry with protective function in other Protection Systems.
	14. Based on a lack of other comments received on this topic, the SDT believes that this description has sufficient clarity. The word "detection" on Table 2 has been corrected to lower case font.
	15. The first row of Table 3 requires that settings be verified to be as specified. The SDT believes this to be a proper maintenance function but that the determination of the adequacy of settings (or, for that matter, design criteria) is more properly a design issue and should not be included in a maintenance standard.
	16. The SDT believes it is more appropriate for entities themselves to establish acceptance criteria that meet the performance requirements necessary for the proper operation of their Protection Systems.

	17. The SDT disagrees. It is not practical for all entities to rapidly transition all of their protection systems to the new program, especially with some component types on maintenance intervals of up to 12 years. Nonetheless, all in scope Protection Systems must either be being maintained by either a PRC-005-1 program or a PRC-005-2 program. The SDT believes the graded approach mapped out in the Implementation plan is practical. Finally, if in order to lessen the complexity of documentation requirements, an entity wishes to implement PRC-005-2 on a more rapid rate than laid out in the Implementation plan, they are free to do so.	
Central Lincoln		We are concerned about what exactly "initiate resolution" means in R3. We foresee this being a potential area of disagreement between registrants and CEAs when a registrant believes an open work order suffices and the CEA wants to see schedules or purchase orders. Neither M3 nor the FAQs address this.
Response: Thank you for your comment. **The SDT has clarified the intent of the requirement to initiate resolution of Unresolved Maintenance Issues by including it separately as Requirement R5 and revising the language such that the responsible entity must demonstrate its efforts to correct Unresolved Maintenance Issues because of the concern that many more complex Unresolved Maintenance Issues might require greater than the remaining maintenance interval to resolve. For example, a problem might be identified on a VRLA battery during a 6 month check. In instances such as one that requiring battery replacement as part of the long term resolution, it is highly unlikely that the battery could be replaced in time to meet the 6 calendar month requirement for this maintenance activity. The SDT does not believe entities should be found in violation of a maintenance program requirement because of the inability to complete a remediation program within the original maintenance interval. The SDT does believe corrective actions should be timely but concludes it would be impossible to postulate all possible remediation projects and therefore, impossible to specify bounding time frames for resolution of all possible Unresolved Maintenance Issues or what documentation might be sufficient to provide proof that an entity is correcting these issues.**		
Dynegy Inc.		For Facilities listed under 4.2, are Reserve Auxiliary Transformers supposed to be included?

Response: Thank you for your comment.

No, Reserve Auxiliary Transformers or system connected station service transformers were intentionally removed from the Applicability in a previous draft. Generator-connected station service transformers are often connected to the generator bus directly without an interposing breaker; thus, the Protection Systems on these transformers will trip the generator as discussed in 4.2.5.1. and are thus included. Reserve auxiliary or system connected station service transformers Protection Systems will not directly result in the trip of a generator and as such are omitted from the Applicability of the standard.

American Electric Power		1. As it stands, if an entity adopts a more stringent maintenance program but fails to meet it, that entity could be found non-compliant despite continuing to abide by the minimum requirements of the standard itself. Entities should have the ability, if they so choose, to include additional maintenance activities or more stringent intervals than specified within the standard without concern of penalty in the event they are unable to accomplish them. In short, entities should only be audited against the requirements stated within the standard. Table 1-3 of the standard lists the minimum required maintenance activities for voltage and current sensing devices as "Verify that current and voltage signal values are provided to the protective relay." 2. Consistent with Table 1-3, Section 15.2.1 of the Supplementary Reference states that an entity "...must verify that the protective relay is receiving the expected values from the voltage and current sensing devices..." The Supplementary Reference further offers examples of how this requirement may be satisfied with most examples referencing the need to verify the signal at each relay in the circuit. We recognize the need to verify a voltage signal at each protective relay, as these devices are wired in parallel and an open circuit at one location may not impact the other devices on the circuit. However, we do not agree that there is a need to verify a current signal at each protective relay. Current devices are wired in series, and an open circuit at any location will impact all other devices on the circuit. For this reason, a single measurement of the current circuit is sufficient. We recommend updating Table 1-3 and the supplementary reference to account for the different physical characteristics of voltage and current circuits. 3. This standard encompasses a very broad range of component types and functionality across broad segments of the BES. The proposed VSLs and VRFs place the same level of severity or priority on facilities that serve local load with that of an EHV facility. The percentages indicated in the VSLs seem to be too strict based upon the vast quantity of elements in scope and broad range of application. Other standards have applicability for certain thresholds of voltage levels, etc. Why not this standard as well?

Response: Thank you for your comments.

1. **The standard and the Supplementary Reference and FAQ document have been changed to address your concerns. Specifically, Requirement R1 part 1.3 has been removed; Requirement R3 has been revised so that, for time-based programs, entities shall comply with the tables; Requirement R4 has been added to address performance-based maintenance, and Requirement R5 has been added to address Unresolved Maintenance Issues.**
2. **An open circuit is not the only failure mechanism for a CT secondary circuit. Grounded CT secondary wiring can result in situation where accurate current is present in the part of the secondary circuit upstream of the ground but current would be shunted to ground and might not pass through devices downstream of the ground. Entities should not interpret PRC-005-2 as specifying "how" to test but rather that PRC-005-2 only specifies "what" to test. Entities are free to determine creative ways to fulfill requirements.**
3. **VSLs characterize "how bad did you miss a requirement", rather than on the impact to the BES. The percentages indicated in the VSLs follow demarcation guidelines given by NERC to Standard Drafting Teams. With the magnitude of the total number of Protection System components for many entities likely to be very large, exceeding 5% of that total equates to failing to perform maintenance and testing on a (potentially) large number of components, and should be reflected by a Severe VSL. The SDT further believes that this standard should be applied uniformly to the applicable facilities, rather than stratifying it to reflect different system voltages.**

Lincoln Electric System		In reference to the zero tolerance policy evident within PRC-005-2, LES offers the following suggestion: Set up an annual review of a random set sample (20% for example) of Protection System equipment to self-verify compliance. If issues arise, allow the entity the opportunity to correct the issue, make the necessary procedural and/or documentation adjustments and not be considered non-compliant. The idea is to allow entities the opportunity to continually improve their practices and procedures; in essence, allow them to show they are attempting to follow a "culture of compliance". If habitual problems arise, then non-compliance will be evident. One example that justifies this approach is software glitches or improper programming. As more and more systems become automated, scheduling of maintenance will be done automatically through various types of software. If a program has even one attribute set incorrectly, it could not function as intended and would potentially set up incorrect intervals for maintenance and testing. It was not intended this way by the entity and they are not intentionally disregarding the standards, but could nevertheless be put in a situation where a maintenance interval is missed. An annual review would catch things like this and allow an entity to continuously improve their program without self-reporting. This concept is expanded from a current draft version of several CIP standards; therefore, it is being at least considered by other drafting teams.
Response: Thank you for your comments. **The NERC criteria for VSLs do not permit any level of non-performance without being in violation. The graded approach of the VSL for Requirement R3 provides for an escalating degree of severity for increasing degrees of non-compliance.**		
NIPSCO		The new standard itself, the implementation plan and supplemental reference/FAQ makes up more than 100 pages of material. Granted that several standards are being combined here, still it is simply too involved to monitor. And there is still not enough detail in the standard leaving items which are ambiguous and open to interpretation, and therefore open to fines. In order to remove such interpretation, maintenance documentation will need to be precise and extensive. This will necessitate more and more staff to control and validate data. Adding staff is great but it does not seem to ensure that there is increased reliability.

Response: Thank you for your comment. **FERC Order 693 and the approved SAR assign the SDT to develop a standard with maximum allowable intervals and minimum maintenance activities. The intervals and activities specified are believed by the SDT to be technically effective, in a fashion that may be consistently monitored for compliance.**		
Entergy Services		We understand and disagree with the SDT position on the following recommendation. We do not agree with proposed Section 4.2.1 applicability since it captures only a portion of the previously approved applicability Interpretation (PRC-005-1a) which was developed specifically for PRC-005-1. We suggest the draft standard be revised to conform to the wording in the Interpretation: "Protection Systems that are installed for the purpose of detecting faults on BES Elements (lines, buses, transformers, etc.) and trips an interrupting device that interrupts current supplied directly from the BES Elements."
Response: Thank you for your comment. **The SDT believes that the Applicability as stated in PRC-005-2 is correct and that it supports the reliability of the BES. The SDT observes that the approved Interpretation addresses the term, "transmission Protection System", and notes that this term is not used within PRC-005-2; thus the interpretation does not apply to PRC-005-2. PRC-005-2 specifically addresses "Protection Systems that are installed for the purpose of detecting faults on BES Elements." Please see Section 2.3 of the Supplementary Reference and FAQ document for additional discussion.**		

Independent Electricity System Operator		The IESO disagrees with the concept that auditors use the standards as minimum requirements and evaluate compliance based on a registered entity's own governance. We believe that the entity could be found non-compliant with Requirement R3 if they fail to follow the internal maintenance intervals established in their PSMP, even though actual maintenance intervals are no less frequent than the prescribed maximum intervals established in the draft standard. The potential for such a finding will discourage conscientious entities from setting higher internal targets for their planned maintenance and promote compliance with only the minimum requirements of the standard. We therefore propose the following revision to Requirement R3:R3. Each Transmission Owner, Generator Owner, and Distribution Provider shall implement and follow its PSMP and initiate resolution of any unresolved maintenance issues. In the case of time-based maintenance programs, each Transmission Owner, Generator Owner, and Distribution Provider is permitted to deviate from its PSMP provided that actual maintenance intervals do not exceed those specified in Tables 1-1 through 1-5, Table 2 and Table 3. [Violation Risk Factor: High] [Time Horizon: Operations Planning]
Response: Thank you for your comments. The standard and the Supplementary Reference and FAQ document have been changed to address your concerns. Specifically, Requirement R1 part 1.3 has been removed; Requirement R3 has been revised so that, for time-based programs, entities shall comply with the tables; Requirement R4 has been added to address performance-based maintenance, and Requirement R5 has been added to address Unresolved Maintenance Issues.		

Liberty Electric Power LLC		With the development and publication of maximum maintenance and testing intervals (the Tables), there is no longer a reliability need for a RE to identify the associated maintenance intervals for Protection System Components. Further, REs who wish to perform these activities in shorter intervals than those allowed by the standard (See Supplementary Reference, page 27,"If your PSMP (plan) requires activities more often than the Tables maximum then you must perform and document those activities to your more stringent standard.")As noted in Question 5, if the entity completes all activities within the maximum interval allowed by the standard, there can be no reliability concern; if there is a reliability issue, then the table interval is incorrect. I would suggest the following changes.1. Change R1.2 to read "Identify any Protection System component where the RE is using a performance based maintenance interval. No batteries associated with the station DC supply component type of Protection System shall be included in a performance based system".2. Change R1.3 to read "The intervals for time-based programs are established in Table 1-1 through 1-5, Table 2, and Table 3".3. Change M1 to add the phrase "for performance-based components" after the words "maintenance intervals".4. In M1, replace the words "the type of maintenance program applied (time-based, performance based, or a combination of these maintenance methods)' with the words "the identification of any protection system components using performance based intervals".
Response Thank you for your comments. The standard and the Supplementary Reference and FAQ document have been changed to address your concerns. Specifically, Requirement R1 part 1.3 has been removed; Requirement R3 has been revised so that, for time-based programs, entities shall comply with the tables; Requirement R4 has been added to address performance-based maintenance, and Requirement R5 has been added to address Unresolved Maintenance Issues.		

Ameren		(1)Measure M3 on page 5 should only apply to 99.5% of the components. Please revise to state: "Each ... shall have evidence that it has implemented the Protection System Maintenance Program for 99.5% of its components and initiated...." PRC-005-2 unrealistically mandates perfection without providing technical justification. A basic premise of engineering is to allow for reasonable tolerances, even Six Sigma allows for defects. Requiring perfection may well harm reliability by distracting valuable resources from higher priority duties concerning the Protection System. We are not asking for the VSL to be changed. No one is perfect and it is impractical to imply perfection is achievable. The consequence of a very small number of components having a missed or late maintenance activity is insignificant to BES reliability. Our proposed reasonable tolerance sets an appropriate level of performance expectation. We disagree with the notion that this is "non-performance". (2) An alternate approach regarding the unrealistic perfection of M3 is to correctly recognize that the protection of the primary BES is the objective. Most Protection Systems are redundant by design and the entity needs to be afforded the opportunity to show that a redundant component met the PSMP thereby providing the required protection. The entity should be allowed a reasonable time frame of one calendar increment to maintain the component in question. Our concern stems from the tens of thousands of components in a PSMP, and the reality that rarely but occasionally a data base error or outage scheduling issue may result in a very small number component exceeding their maximum interval. As long as the entity can show that BES protection was sustained and maintains the component quickly (e.g. within one calendar month of discovery), BES reliability has been maintained. (3) Now that FERC has approved the Project 2009-17 Interpretation, please acknowledge more directly in the Supplement that the 'transmission Protection System' that is now approved. NERC interprets "transmission Protection System," as it appears in Requirements R1 and R3 of PRC-004-1 and Requirements R1 and R2 of PRC-005-1, to mean "any Protection System that is installed for the purpose of detecting faults on transmission elements (lines, buses, transformers, etc.) identified as being included in the Bulk Electric System (BES) and trips an interrupting device that interrupts current supplied directly from the BES."

Response: Thank you for your comments.

1. **The NERC criteria for VSLs do not permit any level of non-performance without being in violation. The graded approach of the VSL for Requirement R3 provides for an escalating degree of severity for increasing degrees of non-compliance.**
2. **Regarding redundancy, the SDT believes that it is important that redundant components be maintained within the indicated interval, and the prescribed interval already considers the reliability benefits of redundant equipment. It should be noted that misoperations not only occur for failure to operate for valid faults but also operation of a protection system for an invalid, non-fault condition. It is important that both components be maintained within the specified intervals to help preclude this second type of misooperation – e.g., over tripping of relays.**
3. **The SDT believes that the Applicability as stated in PRC-005-2 is correct and that it supports the reliability of the BES. The SDT observes that the approved Interpretation addresses the term, "transmission Protection System", and notes that this term is not used within PRC-005-2; thus the interpretation does not apply to PRC-005-2. PRC-005-2 specifically addresses "Protection Systems that are installed for the purpose of detecting faults on BES Elements." Please see Section 2.3 of the Supplementary Reference and FAQ document for additional discussion.**

Northeast Utilities		1. The definition of "Component" in PRC-005-2 Draft 1, states "Another example of where the entity has some discretion on determining what constitutes a single component is the voltage and current sensing devices, where the entity may choose either to designate a full three-phase set of such devices or a single device as a single component." However, in Section 15.2 of Supplementary Reference & FAQ it states: "The intent of the maintenance activity is to verify the input to the protective relay from the device that produces the current or voltage signal sample." Please consider reconciling these two sections (definition of "Component" and Section 15.2) to allow the entity to consider a relay as the single component versus the voltage and current sensing devices, and pursuant with Section 15.2 perform the voltage and current checks to the inventoried relays. This approach will ensure that the CT and PT check to each relay is performed. Section 15.2 of Supplementary Reference & FAQ states in the second paragraph "The intent of the maintenance activity is to verify the input to the protective relay from the device that produces the current or voltage signal sample." Please consider revising the last bullet in Section 15.2, paragraph 3 from "Any other method that provide documentation that the expected transformer values as applied to the inputs to the protective relays are acceptable" to "Any other method that verifies the input to the protective relay from the device that produces the current or voltage signal sample." 2. As shown (see Figure A-2) and discussed in Appendix A of Supplementary Reference & FAQ list, there are four elements that are not verified. Following the identification of the four elements that are not verified, a practical solution is provided for testing methods on three of the four elements. Please provide a practical solution for the fourth element.

Response: Thank you for your comments.

1. **The SDT does not believe a discrepancy exists. CTs and PTs or other current and voltage sensing devices are indeed Protection System Components. Section 15.2 of the Supplementary Reference and FAQ document is describing a maintenance activity that is to be performed to validate proper function of that Component type. The Supplementary Reference and FAQ document has been revised to clarify.**
2. **Appendix A to the Supplementary Reference and FAQ document (with the imbedded figures) is intended to provide an example of the application of monitoring to minimize maintenance activities and maximize maintenance intervals, but is not intended to be a comprehensive treatise of the subject.**

MidAmerican Energy Company		1. The following comment was submitted in the last comment period: In the background section of the implementation plan in item two it states "..it is unrealistic for those entities to be immediately in compliance with the new intervals." Recent compliance application notices indicate that auditors are requiring entities to include proof of compliance to maintenance intervals by providing the most recent and prior maintenance dates. The implementation document could be improved by providing clarity to what is expected with regard to when an entity is expected to provide evidence of maintenance interval compliance given the quoted item above. As an example in the section the implementation plan for a 6 year interval item it states: " The entity shall be at least 30% compliant on the first day of the first calendar quarter 3 years following applicable regulatory approval.." In keeping with the previously quoted "reasonableness" criteria it would seem that 30% compliant would mean only one test action would be needed to be completed by the indicated deadline and the next one would be required no later than 6 years from that first test. It is recommended that the implementation plan document be improved to clarify this issue. The consideration of comments response to the above did not completely address the issue that led to the comment. In the Tables in PRC-005-2 there are maintenance items that an entity may not have had in their PRC-005-1 compliance program even though they did have a compliant maintenance program (e.g. battery continuity testing) for that Protection System component. As the transition is made to the PRC-005-2 requirement the above clarification should be made to better define what achievement of PRC-005-2 compliance is for that component.
		2. Section 4.2.2 includes UFLS systems installed per the ERO requirements - excluding any additional UFLS systems that a utility has on their system. Section 4.2.3 includes UVLS systems "installed to prevent system voltage collapse or voltage instability for BES reliability". It is assumed that this would only include UVLS systems required by the ERO, but it is not clear as to what is in scope. It is suggested that the wording of 4.2.3 be changed to match the wording in 4.2.2.
		3. In the implementation plan in the R2 and R3 requirements plans, in item a. of each there is a parenthetical statement regarding generating plant scheduled outage intervals. A similar parenthetical statement should be added to the b. and c. items of each of these plans.

		4. The purpose statement of the standard seems to be inconsistent with the applicability section. To correct this it is suggested that the words “affecting the reliability” be removed from the purpose statement.
		5. For consistency with the changes from 3 months to 4 months in the tables of the standard it is suggested that the second item in Table 1-4(b) be changed from 6 calendar months to 7 calendar months.
		6. In the tables for dc Supply the term “unit-to-unit” is used along with “intercell” when referring to measurement of connection resistance. From the applicable IEEE standards (e.g. IEEE 450) the standard terminology seems to be “intercell”. It is recommended that the “unit-to-unit” term be removed to avoid confusion regarding what is to be verified.

Response: Thank you for your comments.

1. **The SDT agrees with your comment and has modified the Implementation plan to better indicate that, for activities being added to an entity's program as part of PRC-005-2 implementation, evidence will be available to show only a single performance of the activity until a full maintenance interval has transpired following initial implementation.**
2. **Entities are required to install UFLS per PRC-007; there are no standards which require entities to install UVLS. However, if entities choose to install UVLS to meet minimum system performance requirements, several standards (including the current PRC-011 and the proposed PRC-005-2) apply. Section 4.2.3 is specifically intended to address these UVLS.**
3. **The SDT provided the allowance for generator plants to allow them until their first maintenance outage to begin program implementation. It is believed that the entity would then likely perform all maintenance on the protection system for a given generator, GSU and, if so equipped, generator connected station auxiliary transformer during that maintenance window. It seems unlikely that an entity would perform maintenance on only a portion of a protection system. Thus, the SDT concludes that inclusion of the parenthetical to the 2nd and 3rd bullets would only add confusion and provide little or no benefit to generator plants in the implementation of their program.**
4. **The purpose of the standard expresses the general intent of the standard, and is further clarified by the Applicability.**
5. **The SDT believes that a 6-month interval is appropriate for these activities.**
6. **The term "unit-to-unit" is used for the conductor utilized to connect one multi-celled battery jar to an adjacent multi-celled battery jar. The SDT does not believe this terminology causes wide spread confusion.**

Manitoba Hydro		-Definition of Protection System Maintenance Program: The definition included in the proposed PRC-005-2 is not the same as the definition provided in the document "Definition for Approval", which also includes items "Upkeep" and "Restore".

Response: Thank you for your comments.

The SDT agrees with your observation and will review the associated documents to attain consistency.

American Transmission Company		a) Change the text of “Standard PRC-005-2 - Protection System Maintenance” Table 1-5 on page 19, Row 1, Column 3 to: ”Verify that each a trip coil is able to operate the circuit breaker, interrupting device, or mitigating device.” Or alternatively, “Electrically operate each interrupting device every 6 years.” Trip coils are designed to be energized no longer than the breaker opening time (3-5 cycles). They are robust devices that will successfully operate the breaker for 5,000-10,000 electrical operations. The most likely source of trip coil failure is the breaker operating mechanism binding, thereby preventing the breaker auxiliary stack from opening and keeping the trip coil energized for too long of a time period. Therefore, trip coil failure is a function of the breaker mechanism failure. Exercising the breakers and circuit switchers is an excellent practice. We would encourage language that would suggest this task be done every 2 years, not to exceed 3 years. Exercising the interrupting devices would help eliminate mechanism binding, reducing the chance that the trip coils are energized too long. The language as currently written in Table 1-5 row 1, will also have the unintentional effect of changing an entities existing interrupting device maintenance interval (essentially driving interrupting device testing to a less than 6 year cycle). b) Change the text of “Standard PRC-005-2 - Protection System Maintenance” Table 1-5 on page 19, Row 3, Column 2 to: “12 calendar years” The maximum maintenance interval for “Electromechanical lockout and/or tripping devices which are directly in a trip path from the protective relay to the interrupting device trip coil” should be consistent with the “Unmonitored control circuit” interval which is 12 calendar years.In order to test the lockout relays, it may be necessary to take a bus outage (due to lack of redundancy and associated stability issues with delayed clearing). Increasing the frequency of bus outages (with associated lines or transformers) will also increase the amount of time that the BES is in a less intact system configuration. Increasing the time the BES is in a less intact system configuration also increases the probability of a low frequency, high impact event occurring. Therefore, the Maximum Maintenance Interval should be 12 years for lockout relays. c) ATC's remaining concern for PRC-005-2 is with definition and timelines established in Table 1-5. ATC is recommending a negative ballot since, as written, the testing of “each” trip coil and the proposed maintenance interval for lockout testing will result in the increased amount of time that the BES is in a less intact system configuration. ATC hopes that the SDT will consider these changes.

Response: Thank you for your comments.

a) **While the SDT agrees with much of your observation about circuit breaker operations, this standard applies to Protection System maintenance and per the Protection System definition does not include the entire circuit breaker. As such we are limited to exercising the trip coils and seeing that they have the intended effect on the interrupting device. A simple cycling of the breaker should have minimal impact on the scheduling of the entities breaker maintenance program.**

b) **The SDT believes that electromechanical lockout relays need periodic operation. As such, these devices are required to be exercised at the same 6 year interval required for electromechanical relays. The SDT recognizes the risk of human error trips when working with testing of lockout devices but believes these risks can be managed. Performance-based maintenance is an option if you want to extend your intervals beyond 6 years. The SDT, however, has modified Table 1-5 to remove other auxiliary relays, etc, from this activity, and clarified that the verification of such devices is included within the 12-year unmonitored control circuitry verification.**

c) **As noted above, the SDT has modified Table 1-5 to remove other auxiliary relays, etc, from the 6-year activity, and clarified that the verification of such devices is included within the 12-year unmonitored control circuitry verification. However, the SDT believes that the other activities addressed in your comment need to be performed as reflected in Table 1-5.**

Southern Company Transmission		Table 1-5: Need clarification on "continuity and energization or ability to operate". What does this mean?

Response: Thank you for comment.

This entry in Table 1-5 has been modified to "Control circuitry whose integrity is monitored and alarmed". Section 15.3 of the Supplementary Reference and FAQ document provides additional discussion on this topic.

Utility Services, Inc		Thank you for the opportunity to address the new documentation and for your efforts.

Response: Thank you for comment.

ITC Holdings		ITC Holdings continues to object to the requirement to exercise auxiliary relays on a 6 year interval. We repeat our previous comments as follows: "It has been our experience that trip failures are rare and that our present 10 year control, trip tests, and other related testing are sufficient in verifying the integrity of the scheme. Section 8.3 of the Supplementary Reference notes statistical surveys were done to determine the maintenance intervals. Were auxiliary relays included in these surveys in such a way to verify that they indeed require a 6 year maintenance interval? We recommend they be considered part of the control circuitry, with a 12 year test cycle." Previous responses from the SDT were: "The SDT believes that the appropriate interval for electromechanical devices such as aux or lockout relays should remain at 6 years, as these devices contain "moving parts" which must be periodically exercised to remain reliable." ITC requests that the statistical basis for the 6 year interval be published. If it is not clear that lockout relays and other auxiliary relays must be exercised on a 6 year interval, then the requirement should be changed to 12 years.
Response: Thank you for your comments. **The SDT believes that electromechanical lockout relays need periodic operation. As such, these devices are required to be exercised at the same 6 year interval required for electromechanical relays. The SDT recognizes the risk of human error trips when working with testing of lockout devices but believes these risks can be managed. Performance-based maintenance is an option if you want to extend your intervals beyond 6 years. The SDT has modified Table 1-5 to remove other auxiliary relays, etc, from this activity, and clarified that the verification of such devices is included within the 12-year unmonitored control circuitry verification as you have suggested.**		
Ingleside Cogeneration LP		Ingleside Cogeneration, LP, continues to believe that the six year requirement to verify channel performance on associated communications equipment will prove to be more detrimental than beneficial on older relays. Clearly newer technology relays which provide read-outs of signal level or data-error rates will easily verified, but the tools which measure power levels and error rates on non-monitored communication links are far more intrusive. After the technician uncouples and re-attaches a fiber optic connection, the communications channel may be left in worse shape after verification than it was prior to the start of the test.

Response: Thank you for your comments. **There are less intrusive ways to verify channel performance that do not require disconnecting communication terminations. It is up to the entity to determine specific maintenance techniques.**		
CenterPoint Energy		For the "Unmonitored control circuitry associated with protective functions", the Table 1-5 requirement is to "Verify all paths of the trip circuits through the trip coil(s) of the circuit breakers or other interrupting devices" every 12 calendar years. CenterPoint Energy recommends this requirement be revised to "No periodic maintenance specified". CenterPoint Energy believes that verifying all tripping paths is a commissioning task, not a preventive maintenance task. CenterPoint Energy performs such checks on new stations and whenever expansion or modification of existing stations dictates such testing. This type of testing can negatively impact BES system reliability with the outages that are required and by exposing the electric system to incorrect tripping. Likewise, CenterPoint Energy recommends the requirement in Table 1-5 to "Verify all paths of the control circuits essential for proper operation of the SPS" every 12 years be revised to "No periodic maintenance specified".
Response: Thank you for your comments. **The SDT believes that it is possible to manage the risks that you describe and that performance of these trip path verifications will be an overall benefit to the reliability of the BES.**		
Oncor Electric Delivery Company LLC		PRC-005-2 is a vast improvement over the vagueness of the existing standard (PRC-005-1), that the new standard makes compliance much easier than the present standard. The new standard recognizes the advances in relay technology and reliability, particularly the benefits of microprocessor based relays. The standard also provides greater flexibility on its implementation while recognizing the benefits of a performance based methodology, particularly as it relates to battery testing. The revised standard eliminates the requirement for a "summary of maintenance and testing procedures" which was vague and provided no real value to the registered entities. Operational and administrative efficiencies can be realized by consolidating the relay testing and maintenance requirements into one standard (PRC-005-1, PRC-008-0, PRC-011-0, PRC-017-0).
Response: Thank you for your comments.		

City of Austin dba Austin Energy		If a Registered Entity has a PSMP that is more stringent than the intervals in PRC-005-2, the Registered Entity should not be considered out of compliance if it fails to meet its internal interval but remains within the interval set forth in PRC-005-2.
Response: Thank you for your comments. The standard and the Supplementary Reference and FAQ document have been changed to address your concerns. Specifically, Requirement R1 part 1.3 has been removed; Requirement R3 has been revised so that, for time-based programs, entities shall comply with the tables; Requirement R4 has been added to address performance-based maintenance, and Requirement R5 has been added to address Unresolved Maintenance Issues.		
BGE		When the term "Maintenance Correctable Issue" was revised to "Unresolved Maintenance Issue", it appears that the PRC-005-2 Protection System Maintenance / Supplementary Reference and FAQ document was not properly updated to reflect this change. There are inconsistencies throughout the entire document were the old term is still showing up instead of the new term, and vice versa.
Response: Thank you for your comments. **The SDT has attempted to correct the terminology inconsistencies you have mentioned between the Standard and the Supplementary Reference and FAQ document.**		
VRFs/VSLs		
Xcel Energy, Inc.	Negative Ballot	The VSL for R3 is confusing because of the lack of a specified time horizon. Are the percentages quoted on an annual schedule basis, an audit period, or a continuous percentage measurement of any previously scheduled maintenance activities? Greater clarity is needed on the intent of this VSL.
Response: Thank you for your comment. **The VSLs that use a graduated VSL have been revised based, in part, on the comments you have provided. The percentages relate to the number of violations reported within the compliance monitoring period relative to the number of components within that component type.**		

Ameren Services	Negative Poll	The VRF for R3 should be Low. Many entities presently do not perform some of the specified maintenance activities on some of their components. The risk to the BES is quite low as proven by the extremely reliable BES performance. We are not aware of such omissions in Protection System performance leading to widespread outages, cascading or uncontrolled separation. This coupled with NERC's insistence on 100% perfect completion of all maintenance for even the Lower VSL leads to an inappropriate and unjustified VRF/VSL combination.
Response: The VRF value of "high" stems from consideration of an entity not performing any maintenance and testing of their Protection System. Specifically, a "high" VRF, for a planning time horizon requirement, addresses violations of requirements that could directly cause or contribute to BES instability, separation, or cascading. While not every failure to properly perform maintenance WILL do these things, they can very well contribute to them, as evidenced by involvement of Protection Systems in every recent significant BES disturbance.		
Flathead Electric Cooperative	Negative Poll	do not believe the severe VSL should apply to distributed UFLS
Response: The VSL is a measure of the completeness of the execution of a requirement. Where a binary evaluation of compliance with a particular requirement is prescribed, the NERC VSL guidelines require the violation level to be severe. If the compliance can be demonstrated to be partially complete, a graduated violation severity level is allowed. The NERC Criteria for setting Violation Severity Levels states that it is preferable to have four VSLs for each requirement.		
Independent Electricity System Operator	Negative Poll	The IESO continues to disagree with the High VRF for R3 which asks for implementing the maintenance plan (and initiate corrective measures) whose development and content requirements (R1 and R2) themselves have a Medium VRF. Failure to develop a maintenance program with the attributes specified in R1, and stipulation of the maintenance intervals or performance criteria as required in R2, will render R3 not executable. Hence, we reiterate our position that the VRF for R3 be changed to Medium.

Response: The VRF value of "high" stems from consideration of an entity not performing any maintenance and testing of their Protection System. Specifically, a "high" VRF, for a planning time horizon requirement, addresses violations of requirements that could directly cause or contribute to BES instability, separation, or cascading. While not every failure to properly perform maintenance WILL do these things, they can very well contribute to them, as evidenced by involvement of Protection Systems in every recent significant BES disturbance.		
Liberty Electric Power LLC	Negative Poll	The percentage structure on unresolved maintenance issues presents problems. Smaller entities are unlikely to ever have more than a handful of unresolved issues, meaning a single failure to initiate would automatically be a High VSL. There would also be a disincentive to close out issues from fear that "resolving" them could potentially increase a violation level on a discovered issue.
Response: The VSLs relating to Unresolved Maintenance Issues have been revised to graduated VSLs using a count of violations, rather than a percentage.		
Xcel Energy, Inc.	Negative Poll	The VSL for R3 is confusing because of the lack of a specified time horizon. Are the percentages quoted on an annual schedule basis, an audit period, or a continuous percentage measurement of any previously scheduled maintenance activities? Greater clarity is needed on the intent of this VSL.
Response: Thank you for your comment. **The VSLs that use a graduated VSL have been revised based, in part, on the comments you have provided. The percentages relate to the number of violations reported within the compliance monitoring period relative to the number of components within that component type.**		

END OF REPORT

NERC
NORTH AMERICAN ELECTRIC RELIABILITY CORPORATION

Standards Announcement

Project 2007-17 Protection System Maintenance and Testing Drafting Team – Nomination Period Open

September 1-23, 2011

The Standards Committee is seeking additional industry experts to serve on the Protection System Maintenance and Testing Drafting Team. While anyone may submit a nomination to participate on this team, the specific focus of this solicitation is to add members that represent smaller entities. This team is drafting revisions to PRC-005-1 Transmission and Generation Protection System Maintenance and Testing.

Nominees should have experience in developing, managing, or supporting a maintenance program or a testing program for one or more of the following:

- Generator protection systems
- Transmission protection systems
- Under-frequency load shedding equipment
- Under-voltage load shedding equipment
- Special protection systems

If you are interested in serving on this drafting team, please complete this nomination form **by September 23, 2011**.

Further details are included on the Project 2007-17 project page:
Project 2007-17 Protection System Maintenance

Standards Process
The Standard Processes Manual contains all the procedures governing the standards development process. The success of the NERC standards development process depends on stakeholder participation. We extend our thanks to all those who participate.

For more information or assistance, please contact Andy Rodriquez (via email) or at (404) 446-9741 or Wendy Sandberg (via email) or at (404) 446-9735.

3353 Peachtree Road NE

Suite 600, North Tower
Atlanta, GA 30326
404-446-2560 | www.nerc.com

Standard Development Roadmap

This section is maintained by the drafting team during the development of the standard and will be removed when the standard becomes effective.

Development Steps Completed:

1. Standards Committee approved posting SAR and draft standard on August 11, 2011.
2. SAR and draft standard were posted for a 45-day concurrent posting and initial ballot from August 15, 2011 through September 29, 2011.

Description of Current Draft:
This is the second draft of the Standard. This standard merges previous standards PRC-005-1a, PRC-008-0, PRC-011-0, and PRC-017-0. It also addresses FERC comments from Order 693, and addresses observations from the NERC System Protection and Control Task Force, as presented in *NERC SPCTF Assessment of Standards: PRC-005-1 — Transmission and Generation Protection System Maintenance and Testing, PRC-008-0 — Underfrequency Load Shedding Equipment Maintenance Programs, PRC-011-0 — UVLS System Maintenance and Testing, PRC-017-0 — Special Protection System Maintenance and Testing.*

Future Development Plan:

Anticipated Actions	Anticipated Date
1. Post for combined 30-day comment and successive ballot.	March – April, 2012
2. Drafting Team Responds to Comments	May – June, 2012
3. Conduct recirculation ballot	June, 2012

Definitions of Terms Used in Standard

This section includes all newly defined or revised terms used in the proposed standard. Terms already defined in the Reliability Standards Glossary of Terms are not repeated here. New or revised definitions listed below become approved when the proposed standard is approved. When the standard becomes effective, these defined terms will be removed from the individual standard and added to the Glossary.

Protection System Maintenance Program (PSMP) — An ongoing program by which Protection System components are kept in working order and proper operation of malfunctioning components is restored. A maintenance program for a specific component includes one or more of the following activities:

- Verify — Determine that the component is functioning correctly.
- Monitor — Observe the routine in-service operation of the component.
- Test — Apply signals to a component to observe functional performance or output behavior, or to diagnose problems.
- Inspect — Detect visible signs of component failure, reduced performance and degradation.
- Calibrate — Adjust the operating threshold or measurement accuracy of a measuring element to meet the intended performance requirement.

Protection System (NERC Board of Trustees Approved Definition)

- Protective relays which respond to electrical quantities,
- Communications systems necessary for correct operation of protective functions,
- Voltage and current sensing devices providing inputs to protective relays,
- Station dc supply associated with protective functions (including station batteries, battery chargers, and non-battery-based dc supply), and
- Control circuitry associated with protective functions through the trip coil(s) of the circuit breakers or other interrupting devices.

The following terms are defined for use only within PRC-005-2, and should remain with the standard upon approval rather than being moved to the Glossary of Terms.

Unresolved Maintenance Issue – A deficiency identified during a maintenance activity that causes the component to not meet the intended performance and requires follow-up corrective action.

Segment – Protection Systems or components of a consistent design standard, or a particular model or type from a single manufacturer that typically share other common elements. Consistent performance is expected across the entire population of a Segment. A Segment must contain at least sixty (60) individual components.

Component Type - Any one of the five specific elements of the Protection System definition.

Component – A Component is any individual discrete piece of equipment included in a Protection System, including but not limited to a protective relay or current sensing device. The designation of what constitutes a control circuit Component is dependent upon how an entity performs and tracks the testing of the control circuitry. Some entities test their control circuits on a breaker basis whereas others test their circuitry on a local zone of protection basis. Thus, entities are allowed the latitude to designate their own definitions of control circuit Components. Another example of where the entity has some discretion

on determining what constitutes a single Component is the voltage and current sensing devices, where the entity may choose either to designate a full three-phase set of such devices or a single device as a single Component.

Countable Event – A Component which has failed and requires repair or replacement, any condition discovered during the maintenance activities in Tables 1-1 through 1-5 and Table 3 which requires corrective action or a Misoperation attributed to hardware failure or calibration failure. Misoperations due to product design errors, software errors, relay settings different from specified settings, Protection System Component configuration errors, or Protection System application errors are not included in Countable Events.

A. Introduction

1. Title: **Protection System Maintenance**

2. Number: PRC-005-2

3. Purpose: To document and implement programs for the maintenance of all Protection Systems affecting the reliability of the Bulk Electric System (BES) so that these Protection Systems are kept in working order.

4. Applicability:

4.1. Functional Entities:

4.1.1 Transmission Owner

4.1.2 Generator Owner

4.1.3 Distribution Provider

4.2. Facilities:

4.2.1 Protection Systems that are installed for the purpose of detecting Faults on BES Elements (lines, buses, transformers, etc.)

4.2.2 Protection Systems used for underfrequency load-shedding systems installed per ERO underfrequency load-shedding requirements.

4.2.3 Protection Systems used for undervoltage load-shedding systems installed to prevent system voltage collapse or voltage instability for BES reliability.

4.2.4 Protection Systems installed as a Special Protection System (SPS) for BES reliability.

4.2.5 Protection Systems for generator Facilities that are part of the BES, including:

4.2.5.1 Protection Systems that act to trip the generator either directly or via lockout or auxiliary tripping relays.

4.2.5.2 Protection Systems for generator step-up transformers for generators that are part of the BES.

4.2.5.3 Protection Systems for transformers connecting aggregated generation, where the aggregated generation is part of the BES (e.g., transformers connecting facilities such as wind-farms to the BES).

4.2.5.4 Protection Systems for generator-connected station service transformers used on generators which are part of the BES, that act to trip the generator either directly or via lockout or tripping auxiliary relays.

5. Effective Date: See Implementation Plan

B. Requirements

R1. Each Transmission Owner, Generator Owner, and Distribution Provider shall establish a Protection System Maintenance Program (PSMP) for its Protection Systems identified in Section 4.2. *[Violation Risk Factor: Medium] [Time Horizon: Operations Planning]*

The PSMP shall:

1.1. Identify which maintenance method (time-based, performance-based (per PRC-005 Attachment A), or a combination) is used to address each Protection System Component Type. All batteries associated with the station dc supply Component Type of a Protection System shall be included in a time-based program as described in Table 1-4 and Table 3.

> ***Component Type*** *- Any one of the five specific elements of the Protection System definition.*

1.2. Include the applicable monitored Component attributes applied to each Protection System Component Type consistent with the maintenance intervals specified in Tables 1-1 through 1-5, Table 2, and Table 3 where monitoring is used to extend the maintenance intervals beyond those specified for unmonitored Protection System Components.

> **Component** – *A component is any individual discrete piece of equipment included in a Protection System, including but not limited to a protective relay or current sensing device. The designation of what constitutes a control circuit component is very dependent upon how an entity performs and tracks the testing of the control circuitry. Some entities test their control circuits on a breaker basis whereas others test their circuitry on a local zone of protection basis. Thus, entities are allowed the latitude to designate their own definitions of control circuit components. Another example of where the entity has some discretion on determining what constitutes a single component is the voltage and current sensing devices, where the entity may choose either to designate a full three-phase set of such devices or a single device as a single component.*

R2. Each Transmission Owner, Generator Owner, and Distribution Provider that uses performance-based maintenance intervals in its PSMP shall follow the procedure established in PRC-005 Attachment A to establish and maintain its performance-based intervals. *[Violation Risk Factor: Medium] [Time Horizon: Operations Planning]*

R3. Each Transmission Owner, Generator Owner, and Distribution Provider that utilizes time-based maintenance program(s) shall maintain its Protection System Components that are included within the time-based maintenance program in accordance with the minimum maintenance activities and maximum maintenance intervals prescribed within Tables 1-1 through 1-5, Table 2, and Table 3. *[Violation Risk Factor: High] [Time Horizon: Operations Planning]*

R4. Each Transmission Owner, Generator Owner, and Distribution Provider that utilizes performance-based maintenance program(s) in accordance with Requirement R2 shall implement and follow its PSMP for its Protection System Components that are included within the performance-based program(s). *[Violation Risk Factor: High] [Time Horizon: Operations Planning]*

> ***Unresolved Maintenance Issue*** *- A deficiency identified during a maintenance activity that causes the component to not meet the intended performance and requires follow-up corrective action.*

R5. Each Transmission Owner, Generator Owner, and Distribution Provider shall demonstrate efforts to correct identified Unresolved Maintenance Issues. *[Violation Risk Factor: Medium] [Time Horizon: Operations Planning]*

C. Measures

M1. Each Transmission Owner, Generator Owner and Distribution Provider shall have a documented Protection System Maintenance Program in accordance with Requirement R1.

For each Protection System Component Type, the documentation shall include the type of maintenance method applied (time-based, performance-based, or a combination of these maintenance methods), and shall include all batteries associated with the station dc supply Component Types in a time-based program as described in Table 1-4 and Table 3. (Part 1.1)

For Component Types that use monitoring to extend the maintenance intervals, the responsible entity(s) shall have evidence for each protection Component Type (such as manufacturer's specifications or engineering drawings) of the appropriate monitored Component attributes as specified in Tables 1-1 through 1-5, Table 2, and Table 3. (Part 1.2)

M2. Each Transmission Owner, Generator Owner, and Distribution Provider that uses performance-based maintenance intervals shall have evidence that its current performance-based maintenance program(s) is in accordance with Requirement R2, which may include but is not limited to Component lists, dated maintenance records, and dated analysis records and results.

M3. Each Transmission Owner, Generator Owner, and Distribution Provider that utilizes time-based maintenance program(s) shall have evidence that it has maintained its Protection System Components included within its time-based program in accordance with Requirement R3. The evidence may include but is not limited to dated maintenance records, dated maintenance summaries, dated check-off lists, dated inspection records, or dated work orders.

M4. Each Transmission Owner, Generator Owner, and Distribution Provider that utilizes performance-based maintenance intervals in accordance with Requirement R2 shall have evidence that it has implemented the Protection System Maintenance Program for the Protection System Components included in its performance-based program in accordance with Requirement R4. The evidence may include but is not limited to dated maintenance records, dated maintenance summaries, dated check-off lists, dated inspection records, or dated work orders.

M5. Each Transmission Owner, Generator Owner, and Distribution Provider shall have evidence that it has undertaken efforts to correct identified Unresolved Maintenance Issues in accordance with Requirement R5. The evidence may include but is not limited to work orders, replacement Component orders, invoices, project schedules, return material authorizations (RMAs) or purchase orders.

D. Compliance

1. Compliance Monitoring Process

1.1. Compliance Enforcement Authority

Regional Entity

1.2. Compliance Monitoring and Enforcement Processes:

Compliance Audit

Self-Certification

Spot Checking

Compliance Investigation

Self-Reporting

Complaints

1.3. Evidence Retention

The following evidence retention periods identify the period of time an entity is required to retain specific evidence to demonstrate compliance. For instances where the evidence retention period specified below is shorter than the time since the last audit, the Compliance Enforcement Authority may ask an entity to provide other evidence to show that it was compliant for the full time period since the last audit.

The Transmission Owner, Generator Owner, and Distribution Provider shall each keep data or evidence to show compliance as identified below unless directed by its Compliance Enforcement Authority to retain specific evidence for a longer period of time as part of an investigation.

For Requirement R1, the Transmission Owner, Generator Owner, and Distribution Provider shall each keep its current dated Protection System Maintenance Program, as well as any superseded versions since the preceding compliance audit, including the documentation that specifies the type of maintenance program applied for each Protection System Component Type.

For Requirement R2, Requirement R3, Requirement R4, and Requirement R5, the Transmission Owner, Generator Owner, and Distribution Provider shall each keep documentation of the two most recent performances of each distinct maintenance activity for the Protection System Components, or all performances of each distinct maintenance activity for the Protection System Component since the previous scheduled audit date, whichever is longer.

The Compliance Enforcement Authority shall keep the last audit records and all requested and submitted subsequent audit records.

1.4. Additional Compliance Information

None.

2. Violation Severity Levels

Requirement Number	Lower VSL	Moderate VSL	High VSL	Severe VSL
R1	The responsible entity's PSMP failed to specify whether one Component Type is being addressed by time-based or performance-based maintenance, or a combination of both. (Part 1.1) OR The responsible entity's PSMP failed to include applicable station batteries in a time-based program. (Part 1.1)	The responsible entity's PSMP failed to specify whether two Component Types are being addressed by time-based or performance-based maintenance, or a combination of both. (Part 1.1)	The responsible entities' PSMP failed to include the applicable monitoring attributes applied to each Protection System Component Type consistent with the maintenance intervals specified in Tables 1-1 through 1-5, Table 2, and Table 3 where monitoring is used to extend the maintenance intervals beyond those specified for unmonitored Protection System Components. (Part 1.2).	The responsible entity failed to establish a PSMP. OR The responsible entity failed to specify whether three or more Component Types are being addressed by time-based or performance-based maintenance, or a combination of both. (Part 1.1).
R2	The responsible entity uses performance-based maintenance intervals in its PSMP but failed to reduce Countable Events to less than 4% within three years.	NA	The responsible entity uses performance-based maintenance intervals in its PSMP but failed to reduce Countable Events to less than 4% within four years.	The responsible entity uses performance-based maintenance intervals in its PSMP but: 1) Failed to establish the technical justification described within Requirement R2 for the initial use of the performance-based PSMP OR 2) Failed to reduce Countable Events to less than 4% within five years OR 3) Maintained a Segment with less than 60 Components OR 4) Failed to: • Annually update the list of Components, OR

Requirement Number	Lower VSL	Moderate VSL	High VSL	Severe VSL
				• Annually perform maintenance on the greater of 5% of the segment population or 3 Components, OR • Annually analyze the program activities and results for each Segment.
R3	For Protection System Components included within a time-based maintenance program, the responsible entity failed to maintain 5% or less of the total Components included within a specific Protection System Component Type, in accordance with the minimum maintenance activities and maximum maintenance intervals prescribed within Tables 1-1 through 1-5, Table 2, and Table 3.	For Protection System Components included within a time-based maintenance program, the responsible entity failed to maintain more than 5% but 10% or less of the total Components included within a specific Protection System Component Type, in accordance with the minimum maintenance activities and maximum maintenance intervals prescribed within Tables 1-1 through 1-5, Table 2, and Table 3.	For Protection System Components included within a time-based maintenance program, the responsible entity failed to maintain more than 10% but 15% or less of the total Components included within a specific Protection System Component Type, in accordance with the minimum maintenance activities and maximum maintenance intervals prescribed within Tables 1-1 through 1-5, Table 2, and Table 3.	For Protection System Components included within a time-based maintenance program, the responsible entity failed to maintain more than 15% of the total Components included within a specific Protection System Component Type, in accordance with the minimum maintenance activities and maximum maintenance intervals prescribed within Tables 1-1 through 1-5, Table 2, and Table 3.
R4	For Protection System Components included within a performance-based maintenance program, the responsible entity failed to maintain 5% or less of the annual scheduled maintenance for a specific Protection System Component Type in accordance with their performance-based PSMP.	For Protection System Components included within a performance-based maintenance program, the responsible entity failed to maintain more than 5% but 10% or less of the annual scheduled maintenance for a specific Protection System Component Type in accordance with their performance-based PSMP.	For Protection System Components included within a performance-based maintenance program, the responsible entity failed to maintain more than 10% but 15% or less of the annual scheduled maintenance for a specific Protection System Component Type in accordance with their performance-based PSMP.	For Protection System Components included within a performance-based maintenance program, the responsible entity failed to maintain more than 15% of the annual scheduled maintenance for a specific Protection System Component Type in accordance with their performance-based PSMP.
R5	The responsible entity failed to undertake efforts to correct 5 or less Unresolved Maintenance Issues.	The responsible entity failed to undertake efforts to correct greater than 5, but less than or equal to 10	The responsible entity failed to undertake efforts to correct greater than 10, but less than or equal to 15	The responsible entity failed to undertake efforts to correct greater than 15 Unresolved Maintenance

Requirement Number	Lower VSL	Moderate VSL	High VSL	Severe VSL
		Unresolved Maintenance Issues.	Unresolved Maintenance Issues.	Issues.

E. Regional Variances

None

F. Supplemental Reference Document

The following documents present a detailed discussion about determination of maintenance intervals and other useful information regarding establishment of a maintenance program...

1. PRC-005-2 Protection System Maintenance Supplementary Reference and FAQ — July 2011.

Version History

Version	Date	Action	Change Tracking
2	TBD	Complete revision, absorbing maintenance requirements from PRC-005-1, PRC-005-1a, PRC-008-0, PRC-011-0, PRC-017	Complete revision

Table 1-1 Component Type - Protective Relay Excluding distributed UFLS and distributed UVLS (see Table 3)		
Component Attributes	**Maximum Maintenance Interval**[1]	**Maintenance Activities**
Any unmonitored protective relay not having all the monitoring attributes of a category below.	6 calendar years	For all unmonitored relays: • Verify that settings are as specified For non-microprocessor relays: • Test and, if necessary calibrate For microprocessor relays: • Verify operation of the relay inputs and outputs that are essential to proper functioning of the Protection System. • Verify acceptable measurement of power system input values.
Monitored microprocessor protective relay with the following: • Internal self diagnosis and alarming (see Table 2). • Voltage and/or current waveform sampling three or more times per power cycle, and conversion of samples to numeric values for measurement calculations by microprocessor electronics. • Alarming for power supply failure (see Table 2).	12 calendar years	Verify: • Settings are as specified. • Operation of the relay inputs and outputs that are essential to proper functioning of the Protection System. • Acceptable measurement of power system input values.

[1] For the tables in this standard, a calendar year starts on the first day of a new year (January 1) after a maintenance activity has been completed. For the tables in this standard, a calendar month starts on the first day of the first month after a maintenance activity has been completed.

Monitored microprocessor protective relay with preceding row attributes and the following: • Ac measurements are continuously verified by comparison to an independent ac measurement source, with alarming for excessive error (See Table 2). • Some or all binary or status inputs and control outputs are monitored by a process that continuously demonstrates ability to perform as designed, with alarming for failure (See Table 2). • Alarming for change of settings (See Table 2).	12 calendar years	Verify only the unmonitored relay inputs and outputs that are essential to proper functioning of the Protection System.

Table 1-2 Component Type - Communications Systems Excluding distributed UFLS and distributed UVLS (see Table 3)		
Component Attributes	**Maximum Maintenance Interval**	**Maintenance Activities**
Any unmonitored communications system necessary for correct operation of protective functions, and not having all the monitoring attributes of a category below.	4 calendar months	Verify that the communications system is functional.
	6 calendar years	Verify that the channel meets performance criteria pertinent to the communications technology applied (e.g. signal level, reflected power, or data error rate). Verify operation of communication system inputs and outputs that are essential to proper functioning of the Protection System.

Any communications system with continuous monitoring or periodic automated testing for the presence of the channel function, and alarming for loss of function (See Table 2).	12 calendar years	Verify that the channel meets performance criteria pertinent to the communications technology applied (e.g. signal level, reflected power, or data error rate). Verify operation of communication system inputs and outputs that are essential to proper functioning of the Protection System.
Any communications system with continuous monitoring or periodic automated testing for the performance of the channel using criteria pertinent to the communications technology applied (e.g. signal level, reflected power, or data error rate, and alarming for excessive performance degradation). (See Table 2)	No periodic maintenance specified	None.

Table 1-3 Component Type - Voltage and Current Sensing Devices Providing Inputs to Protective Relays Excluding distributed UFLS and distributed UVLS (see Table 3)		
Component Attributes	**Maximum Maintenance Interval**	**Maintenance Activities**
Any voltage and current sensing devices not having monitoring attributes of the category below.	12 calendar years	Verify that current and voltage signal values are provided to the protective relays.
Voltage and Current Sensing devices connected to microprocessor relays with AC measurements are continuously verified by comparison of sensing input value, as measured by the microprocessor relay, to an independent ac measurement source, with alarming for unacceptable error or failure (see Table 2).	No periodic maintenance specified	None.

Table 1-4(a) Component Type – Protection System Station dc Supply Using Vented Lead-Acid (VLA) Batteries Excluding distributed UFLS and distributed UVLS (see Table 3) Protection System Station dc supply used only for non-BES interrupting devices for SPS, non-distributed UFLS systems, or non-distributed UVLS systems is excluded (see Table 1-4(e)).		
Component Attributes	**Maximum Maintenance Interval**	**Maintenance Activities**
Protection System Station dc supply using **Vented Lead-Acid (VLA) batteries** not having monitoring attributes of Table 1-4(f).	4 Calendar Months	Verify: • Station dc supply voltage Inspect: • Electrolyte level • For unintentional grounds
	18 Calendar Months	Verify: • Float voltage of battery charger • Battery continuity • Battery terminal connection resistance • Battery intercell or unit-to-unit connection resistance Inspect: • Cell condition of all individual battery cells where cells are visible – or measure battery cell/unit internal ohmic values where the cells are not visible • Physical condition of battery rack
	18 Calendar Months -or- 6 Calendar Years	Verify that the station battery can perform as designed by evaluating the measured cell/unit internal ohmic values to station battery baseline. -or- Verify that the station battery can perform as designed by conducting a performance, service, or modified performance capacity test of the entire battery bank.

Table 1-4(b) Component Type – Protection System Station dc Supply Using Valve-Regulated Lead-Acid (VRLA) Batteries Excluding distributed UFLS and distributed UVLS (see Table 3) Protection System Station dc supply used only for non-BES interrupting devices for SPS, non-distributed UFLS systems, or non-distributed UVLS systems is excluded (see Table 1-4(e)).		
Component Attributes	**Maximum Maintenance Interval**	**Maintenance Activities**
Protection System Station dc supply **with Valve Regulated Lead-Acid (VRLA) batteries** not having monitoring attributes of Table 1-4(f).	4 Calendar Months	Verify: • Station dc supply voltage Inspect: • For unintentional grounds
	6 Calendar Months	Inspect: • Condition of all individual units by measuring battery cell/unit internal ohmic values.
	18 Calendar Months	Verify: • Float voltage of battery charger • Battery continuity • Battery terminal connection resistance • Battery intercell or unit-to-unit connection resistance Inspect: • Physical condition of battery rack
	6 Calendar Months -or- 3 Calendar Years	Verify that the station battery can perform as designed by evaluating the measured cell/unit internal ohmic values to station battery baseline. -or- Verify that the station battery can perform as designed by conducting a performance, service, or modified performance capacity test of the entire battery bank.

Table 1-4(c) Component Type – Protection System Station dc Supply Using Nickel-Cadmium (NiCad) Batteries Excluding distributed UFLS and distributed UVLS (see Table 3) Station dc supply used only for non-BES interrupting devices for SPS, non-distributed UFLS system, or non-distributed UVLS systems is excluded (see Table 1-4(e)).		
Component Attributes	**Maximum Maintenance Interval**	**Maintenance Activities**
Protection System Station dc supply **Nickel-Cadmium (NiCad) batteries** not having monitoring attributes of Table 1-4(f).	4 Calendar Months	Verify: • Station dc supply voltage Inspect: • Electrolyte level • For unintentional grounds
	18 Calendar Months	Verify: • Float voltage of battery charger • Battery continuity • Battery terminal connection resistance • Battery intercell or unit-to-unit connection resistance Inspect: • Cell condition of all individual battery cells. • Physical condition of battery rack
	6 Calendar Years	Verify that the station battery can perform as designed by conducting a performance service, or modified performance capacity test of the entire battery bank.

Table 1-4(d) Component Type – Protection System Station dc Supply Using Non Battery Based Energy Storage Excluding distributed UFLS and distributed UVLS (see Table 3) Station dc supply used only for non-BES interrupting devices for SPS, non-distributed UFLS system, or non-distributed UVLS systems is excluded (see Table 1-4(e)).		
Component Attributes	**Maximum Maintenance Interval**	**Maintenance Activities**
Any Protection System station dc supply not using a battery and not having monitoring attributes of Table 1-4(f).	4 Calendar Months	Verify: • Station dc supply voltage Inspect: • For unintentional grounds
	18 Calendar Months	Inspect: Condition of non-battery based dc supply
	6 Calendar Years	Verify that the dc supply can perform as designed when ac power is not present.

Table 1-4(e) Component Type – Protection System Station dc Supply for non-BES Interrupting Devices for SPS, non-distributed UFLS, and non-distributed UVLS systems		
Component Attributes	**Maximum Maintenance Interval**	**Maintenance Activities**
Any Protection System dc supply used only for tripping only non-BES interrupting devices as part of a SPS, non-distributed UFLS, or non-distributed UVLS system and not having monitoring attributes of Table 1-4(f).	When control circuits are verified (See Table 1-5)	Verify Station dc supply voltage.

Table 1-4(f) Exclusions for Protection System Station dc Supply Monitoring Devices and Systems		
Component Attributes	**Maximum Maintenance Interval**	**Maintenance Activities**
Any station dc supply with high and low voltage monitoring and alarming of the battery charger voltage to detect charger overvoltage and charger failure (See Table 2).	No periodic maintenance specified	No periodic verification of station dc supply voltage is required.
Any battery based station dc supply with electrolyte level monitoring and alarming in every cell (See Table 2).		No periodic inspection of the electrolyte level for each cell is required.
Any station dc supply with unintentional dc ground monitoring and alarming (See Table 2).		No periodic inspection of unintentional dc grounds is required.
Any station dc supply with charger float voltage monitoring and alarming to ensure correct float voltage is being applied on the station dc supply (See Table 2).		No periodic verification of float voltage of battery charger is required.
Any battery based station dc supply with monitoring and alarming of battery string continuity (See Table 2).		No periodic verification of the battery continuity is required.
Any battery based station dc supply with monitoring and alarming of the intercell and/or terminal connection detail resistance of the entire battery (See Table 2).		No periodic verification of the intercell and terminal connection resistance is required.
Any Valve Regulated Lead-Acid (VRLA) or Vented Lead-Acid (VLA) station battery with internal ohmic value monitoring and alarming, and evaluating present values relative to baseline internal ohmic values for every cell/unit (See Table 2).		No periodic measurement and evaluation relative to baseline of battery cell/unit internal ohmic values is required to verify the station battery can perform as designed.
Any Valve Regulated Lead-Acid (VRLA) or Vented Lead-Acid (VLA) station battery with monitoring and alarming of each cell/unit internal ohmic value (See Table 2).		No periodic inspection of the condition of all individual units by measuring battery cell/unit internal ohmic values of a station VRLA or Vented Lead-Acid (VLA) battery is required.

Table 1-5 Component Type - Control Circuitry Associated With Protective Functions Excluding distributed UFLS and distributed UVLS (see Table 3) **Note:** Table requirements apply to all Control Circuitry Components of Protection Systems, and SPSs except as noted.		
Component Attributes	**Maximum Maintenance Interval**	**Maintenance Activities**
Trip coils or actuators of circuit breakers, interrupting devices, or mitigating devices (regardless of any monitoring of the control circuitry).	6 calendar years	Verify that each trip coil is able to operate the circuit breaker, interrupting device, or mitigating device.
Electromechanical lockout devices which are directly in a trip path from the protective relay to the interrupting device trip coil (regardless of any monitoring of the control circuitry).	6 calendar years	Verify electrical operation of electromechanical lockout devices.
Unmonitored control circuitry associated with SPS.	12 calendar years	Verify all paths of the control circuits essential for proper operation of the SPS.
Unmonitored control circuitry associated with protective functions inclusive of all auxiliary relays.	12 calendar years	Verify all paths of the trip circuits inclusive of all auxiliary relays through the trip coil(s) of the circuit breakers or other interrupting devices.
Control circuitry associated with protective functions and/or SPS whose integrity is monitored and alarmed (See Table 2).	No periodic maintenance specified	None.

Table 2 – Alarming Paths and Monitoring In Tables 1-1 through 1-5 and Table 3, alarm attributes used to justify extended maximum maintenance intervals and/or reduced maintenance activities are subject to the following maintenance requirements		
Component Attributes	**Maximum Maintenance Interval**	**Maintenance Activities**
Any alarm path through which alarms in Tables 1-1 through 1-5 and Table 3 are conveyed from the alarm origin to the location where corrective action can be initiated, and not having all the attributes of the "Alarm Path with monitoring" category below. Alarms are reported within 24 hours of detection to a location where corrective action can be initiated.	12 Calendar Years	Verify that the alarm path conveys alarm signals to a location where corrective action can be initiated.
Alarm Path with monitoring: The location where corrective action is taken receives an alarm within 24 hours for failure of any portion of the alarming path from the alarm origin to the location where corrective action can be initiated.	No periodic maintenance specified	None.

Table 3 Maintenance Activities and Intervals for distributed UFLS and distributed UVLS Systems		
Component Attributes	**Maximum Maintenance Interval**	**Maintenance Activities**
Any unmonitored protective relay not having all the monitoring attributes of a category below.	6 calendar years	Verify that settings are as specified For non-microprocessor relays: • Test and, if necessary calibrate For microprocessor relays: • Verify operation of the relay inputs and outputs that are essential to proper functioning of the Protection System. • Verify acceptable measurement of power system input values.
Monitored microprocessor protective relay with the following: • Internal self diagnosis and alarming (See Table 2). • Voltage and/or current waveform sampling three or more times per power cycle, and conversion of samples to numeric values for measurement calculations by microprocessor electronics. Alarming for power supply failure (See Table 2).	12 calendar years	Verify: • Settings are as specified. • Operation of the relay inputs and outputs that are essential to proper functioning of the Protection System. • Acceptable measurement of power system input values

Monitored microprocessor protective relay with preceding row attributes and the following: • Ac measurements are continuously verified by comparison to an independent ac measurement source, with alarming for excessive error (See Table 2). • Some or all binary or status inputs and control outputs are monitored by a process that continuously demonstrates ability to perform as designed, with alarming for failure (See Table 2). Alarming for change of settings (See Table 2).	12 calendar years	Verify only the unmonitored relay inputs and outputs that are essential to proper functioning of the Protection System.
Voltage and/or current sensing devices associated with UFLS or UVLS systems.	12 calendar years	Verify that current and/or voltage signal values are provided to the protective relays.
Protection System dc supply for tripping non-BES interrupting devices used only for a UFLS or UVLS system.	12 calendar years	Verify Protection System dc supply voltage.
Control circuitry between the UFLS or UVLS relays and electromechanical lockout and/or tripping auxiliary devices (excludes non-BES interrupting device trip coils).	12 calendar years	Verify the path from the relay to the lockout and/or tripping auxiliary relay (including essential supervisory logic).
Electromechanical lockout and/or tripping auxiliary devices associated only with UFLS or UVLS systems (excludes non-BES interrupting device trip coils).	12 calendar years	Verify electrical operation of electromechanical lockout and/or tripping auxiliary devices.
Control circuitry between the electromechanical lockout and/or tripping auxiliary devices and the non-BES interrupting devices in UFLS or UVLS systems, or between UFLS or UVLS relays (with no interposing electromechanical lockout or auxiliary device) and the non-BES interrupting devices (excludes non-BES interrupting device trip coils).	No periodic maintenance specified	None.
Trip coils of non-BES interrupting devices in UFLS or UVLS systems.	No periodic maintenance specified	None.

PRC-005 — Attachment A

Criteria for a Performance-Based Protection System Maintenance Program

Purpose: To establish a technical basis for initial and continued use of a performance-based Protection System Maintenance Program (PSMP).

To establish the technical justification for the initial use of a performance-based PSMP:

1. Develop a list with a description of Components included in each designated Segment of the Protection System Component population, with a minimum **Segment** population of 60 Components.
2. Maintain the Components in each Segment according to the time-based maximum allowable intervals established in Tables 1-1 through 1-5 and Table 3 until results of maintenance activities for the Segment are available for a minimum of 30 individual Components of the Segment.

> **Segment** – *Protection Systems or components of a consistent design standard, or a particular model or type from a single manufacturer that typically share other common elements. Consistent performance is expected across the entire population of a Segment. A Segment must contain at least sixty (60) individual components.*

3. Document the maintenance program activities and results for each Segment, including maintenance dates and Countable Events for each included Component.
4. Analyze the maintenance program activities and results for each Segment to determine the overall performance of the Segment and develop maintenance intervals.
5. Determine the maximum allowable maintenance interval for each Segment such that the Segment experiences **Countable Events** on no more than 4% of the Components within the Segment, for the greater of either the last 30 Components maintained or all Components maintained in the previous year.

> **Countable Event** – *A component which has failed and requires repair or replacement, any condition discovered during the maintenance activities in Tables 1-1 through 1-5 and Table 3 which requires corrective action, or a Misoperation attributed to hardware failure or calibration failure. Misoperations due to product design errors, software errors, relay settings different from specified settings, Protection System component configuration errors, or Protection System application errors are not included in Countable Events.*

To maintain the technical justification for the ongoing use of a performance-based PSMP:

1. At least annually, update the list of Protection System Components and Segments and/or description if any changes occur within the Segment.
2. Perform maintenance on the greater of 5% of the Components (addressed in the performance based PSMP) in each Segment or 3 individual Components within the Segment in each year.
3. For the prior year, analyze the maintenance program activities and results for each Segment to determine the overall performance of the Segment.

4. Using the prior year's data, determine the maximum allowable maintenance interval for each Segment such that the Segment experiences Countable Events on no more than 4% of the Components within the Segment, for the greater of either the last 30 Components maintained or all Components maintained in the previous year.
5. If the Components in a Protection System Segment maintained through a performance-based PSMP experience 4% or more Countable Events, develop, document, and implement an action plan to reduce the Countable Events to less than 4% of the Segment population within 3 years.

Standard Development Roadmap

This section is maintained by the drafting team during the development of the standard and will be removed when the standard becomes effective.

Development Steps Completed:

1. Standards Committee ~~approves~~approved posting SAR and draft standard on August 11, 2011.
2. SAR and draft standard were posted for a 45-day concurrent posting and initial ballot from August 15, 2011 through September 29, 2011.

Description of Current Draft:

This is the ~~first~~second draft of the Standard. This standard merges previous standards ~~PRC-005-1,~~ PRC-005-1a, PRC-008-0, PRC-011-0, and PRC-017-0. It also addresses FERC comments from Order 693, and addresses observations from the NERC System Protection and Control Task Force, as presented in *NERC SPCTF Assessment of Standards: PRC-005-1 — Transmission and Generation Protection System Maintenance and Testing, PRC-008-0 — Underfrequency Load Shedding Equipment Maintenance Programs, PRC-011-0 — UVLS System Maintenance and Testing, PRC-017-0 — Special Protection System Maintenance and Testing.*

Future Development Plan:

Anticipated Actions	Anticipated Date
1. Post for combined ~~45~~30-day comment and successive ballot.	~~September – October, 2011~~March – April, 2012
2. ~~Conduct initial ballot~~Drafting Team Responds to Comments	~~October, 2011~~May – June, 2012
3. ~~Drafting Team Responds to Comments~~Conduct recirculation ballot	~~November – December, 2011~~June, 2012

Definitions of Terms Used in Standard

This section includes all newly defined or revised terms used in the proposed standard. Terms already defined in the Reliability Standards Glossary of Terms are not repeated here. New or revised definitions listed below become approved when the proposed standard is approved. When the standard becomes effective, these defined terms will be removed from the individual standard and added to the Glossary.

Protection System Maintenance Program (PSMP) — An ongoing program by which Protection System components are kept in working order and proper operation of malfunctioning components is restored. A maintenance program for a specific component includes one or more of the following activities:

- Verify — Determine that the component is functioning correctly.
- Monitor — Observe the routine in-service operation of the component.
- Test — Apply signals to a component to observe functional performance or output behavior, or to diagnose problems.
- Inspect — Detect visible signs of component failure, reduced performance and degradation.
- Calibrate — Adjust the operating threshold or measurement accuracy of a measuring element to meet the intended performance requirement.

Protection System (NERC Board of Trustees Approved Definition)

- Protective relays which respond to electrical quantities,
- Communications systems necessary for correct operation of protective functions,
- Voltage and current sensing devices providing inputs to protective relays,
- Station dc supply associated with protective functions (including station batteries, battery chargers, and non-battery-based dc supply), and
- Control circuitry associated with protective functions through the trip coil(s) of the circuit breakers or other interrupting devices.

The following terms are defined for use only within PRC-005-2, and should remain with the standard upon approval rather than being moved to the Glossary of Terms.

Unresolved Maintenance Issue – A deficiency ~~that cannot be corrected~~identified during ~~the performance of the~~ a maintenance activity that causes the component to not meet the intended performance and requires follow-up corrective action.

Segment – Protection Systems or components of a consistent design standard, or a particular model or type from a single manufacturer that typically share other common elements. Consistent performance is expected across the entire population of a ~~segment~~Segment. A ~~segment~~Segment must contain at least sixty (60) individual components.

Component Type - Any one of the five specific elements of the Protection System definition.

Component – A ~~component~~Component is any individual discrete piece of equipment included in a Protection System, including but not limited to a protective relay or current sensing device. The designation of what constitutes a control circuit ~~component~~Component is ~~very~~ dependent upon how an entity performs and tracks the testing of the control circuitry. Some entities test their control circuits on a breaker basis whereas others test their circuitry on a local zone of protection basis. Thus, entities are

allowed the latitude to designate their own definitions of control circuit ~~components~~Components. Another example of where the entity has some discretion on determining what constitutes a single ~~component~~Component is the voltage and current sensing devices, where the entity may choose either to designate a full three-phase set of such devices or a single device as a single ~~component~~Component.

Countable Event – A ~~component~~Component which has failed and requires repair or replacement, any condition discovered during the maintenance activities in Tables 1-1 through 1-5 and Table 3 which requires corrective action~~,~~ or a Misoperation attributed to hardware failure or calibration failure. Misoperations due to product design errors, software errors, relay settings different from specified settings, Protection System ~~component~~Component configuration errors, or Protection System application errors are not included in Countable Events.

A. Introduction

1. Title: **Protection System Maintenance**

2. Number: PRC-005-2

3. Purpose: To document and implement programs for the maintenance of all Protection Systems affecting the reliability of the Bulk Electric System (BES) so that these Protection Systems are kept in working order.

4. Applicability:

4.1. Functional Entities:

4.1.1 Transmission ~~Owners~~Owner

4.1.2 Generator ~~Owners~~Owner

4.1.3 Distribution ~~Providers~~Provider

4.2. Facilities:

4.2.1 Protection Systems that are installed for the purpose of detecting ~~faults~~Faults on BES Elements (lines, buses, transformers, etc.)

4.2.2 Protection Systems used for underfrequency load-shedding systems installed per ERO underfrequency load-shedding requirements.

4.2.3 Protection Systems used for undervoltage load-shedding systems installed to prevent system voltage collapse or voltage instability for BES reliability.

4.2.4 Protection Systems installed as a Special Protection System (SPS) for BES reliability.

4.2.5 Protection Systems for generator Facilities that are part of the BES, including:

4.2.5.1 Protection Systems that act to trip the generator either directly or via ~~generator~~ lockout or auxiliary tripping relays.

4.2.5.2 Protection Systems for generator step-up transformers for generators that are part of the BES.

4.2.5.3 Protection Systems for transformers connecting aggregated generation, where the aggregated generation is part of the BES (e.g., transformers connecting facilities such as wind-farms to the BES).

4.2.5.4 Protection Systems for generator-connected station service transformers ~~for~~used on generators ~~that~~which are part of the BES, that act to trip the generator either directly or via lockout or tripping auxiliary relays.

5. Effective Date: See Implementation Plan

B. Requirements

R1. Each Transmission Owner, Generator Owner, and Distribution Provider shall establish a Protection System Maintenance Program (PSMP) for its Protection Systems identified in Section 4.2. *[Violation Risk Factor: Medium] [Time Horizon: ~~Long Term~~Operations Planning]*

The PSMP shall:

~~**1.1.** Address all Protection System **component types.**~~

~~1.2.~~1.1. Identify which maintenance method (time-based, performance-based (per PRC-005 Attachment A), or a combination) is used to address each Protection System ~~component type.~~Component Type. All batteries associated with the station dc supply ~~component type~~Component Type of a Protection System shall be included in a time-based program as described in Table 1-4 and Table 3.

__Component Type__ - Any one of the five specific elements of the Protection System definition.

~~**1.3.** Identify the associated maintenance intervals for time-based programs, to be no less frequent than the intervals established in Table 1-1 through 1-5, Table 2, and Table 3.~~

~~1.4.~~1.2. Include ~~all~~the applicable ~~monitoring~~monitored Component attributes ~~and related maintenance activities~~ applied to each Protection System ~~component type~~Component Type consistent with the maintenance intervals specified in Tables 1-1 through 1-5, Table 2, and Table 3 where monitoring is used to extend the maintenance intervals beyond those specified for unmonitored Protection System Components.

~~**Unresolved Maintenance Issue** - *A deficiency that cannot be corrected during the performance of the maintenance activity and requires follow-up corrective action.*~~

an entity performs and tracks the testing of the control circuitry. Some entities test their control circuits on a breaker basis whereas others test their circuitry on a local zone of protection basis. Thus, entities are allowed the latitude to designate their own definitions of control circuit components. Another example of where the entity has some discretion on determining what constitutes a single component is the voltage and current sensing devices, where the entity may choose either to designate a full three-phase set of such devices or a single device as a single component.

R2. Each Transmission Owner, Generator Owner, and Distribution Provider that uses performance-based maintenance intervals in its PSMP shall follow the procedure established in PRC-005 Attachment A to establish and maintain its performance-based intervals. *[Violation Risk Factor: Medium] [Time Horizon: Operations Planning]*

R3. Each Transmission Owner, Generator Owner, and Distribution Provider ~~shall implement and follow its PSMP and initiate resolution of any **unresolved maintenance issues.**~~ that utilizes time-based maintenance program(s) shall maintain its Protection System Components that are included within the time-based maintenance program in accordance with the minimum maintenance activities and maximum maintenance intervals prescribed within Tables 1-1 through 1-5, Table 2, and Table 3. *[Violation Risk Factor: High] [Time Horizon: Operations Planning]*

__Unresolved Maintenance Issue__ - A deficiency identified during a maintenance activity that causes the component to not meet the intended performance and requires follow-up corrective action.

R4. Each Transmission Owner, Generator Owner, and Distribution Provider that utilizes performance-based maintenance program(s) in accordance with Requirement R2 shall implement and follow its PSMP for its Protection System Components that are included within the performance-based program(s). *[Violation Risk Factor: High] [Time Horizon: Operations Planning]*

~~***Component Type** - Any one of the five specific elements of the Protection System definition.*~~

R5. Each Transmission Owner, Generator Owner, and

Distribution Provider shall demonstrate efforts to correct identified Unresolved Maintenance Issues. *[Violation Risk Factor: Medium] [Time Horizon: Operations Planning]*

C. Measures

M1. Each Transmission Owner, Generator Owner and Distribution Provider shall have a ~~current~~ documented Protection System Maintenance Program ~~that addresses all component types of its Protection Systems, as required by~~in accordance with Requirement R1.

For each Protection System ~~component type~~Component Type, the documentation shall include the type of maintenance ~~program~~method applied (time-based, performance-based, or a combination of these maintenance methods), ~~maintenance activities, maintenance intervals, and, for component types~~and shall include all batteries associated with the station dc supply Component Types in a time-based program as described in Table 1-4 and Table 3. (Part 1.1)

~~**M1.**~~ For Component Types that use monitoring to extend the ~~intervals,~~ maintenance intervals, the responsible entity(s) shall have evidence for each protection Component Type (such as manufacturer's specifications or engineering drawings) of the appropriate ~~monitoring~~monitored Component attributes as specified in ~~Requirement R1, Parts 1.~~Tables 1-1 through 1~~.4.~~ -5, Table 2, and Table 3. (Part 1.2)

M2. Each Transmission Owner, Generator Owner, and Distribution Provider that uses ~~a~~ performance-based maintenance ~~program~~intervals shall have evidence that its current performance-based maintenance program(s) is in accordance with Requirement R2, which may include but is not limited to ~~equipment~~Component lists, dated maintenance records, and dated analysis records and results.

M3. Each Transmission Owner, Generator Owner, and Distribution Provider that utilizes time-based maintenance program(s) shall have evidence that it has ~~implemented the~~maintained its Protection System ~~Maintenance Program and initiated resolution of unresolved maintenance issues~~Components included within its time-based program in accordance with Requirement R3~~, which~~. The evidence may include but is not limited to dated maintenance records, dated maintenance summaries, dated check-off lists, dated inspection records, or dated work orders.

M4. Each Transmission Owner, Generator Owner, and Distribution Provider that utilizes performance-based maintenance intervals in accordance with Requirement R2 shall have evidence that it has implemented the Protection System Maintenance Program for the Protection System Components included in its performance-based program in accordance with Requirement R4. The evidence may include but is not limited to dated maintenance records, dated maintenance summaries, dated check-off lists, dated inspection records, or dated work orders.

M5. Each Transmission Owner, Generator Owner, and Distribution Provider shall have evidence that it has undertaken efforts to correct identified Unresolved Maintenance Issues in accordance with Requirement R5. The evidence may include but is not limited to work orders, replacement Component orders, invoices, project schedules, return material authorizations (RMAs) or purchase orders.

D. Compliance

1. Compliance Monitoring Process

1.1. Compliance ~~Monitoring Responsibility~~Enforcement Authority

Regional Entity

1.2. Compliance Monitoring and Enforcement Processes:

Compliance ~~Audits~~Audit
Self-~~Certifications~~Certification
Spot Checking
Compliance ~~Violation Investigations~~Investigation
Self-Reporting
Complaints

1.3. ~~Data~~Evidence Retention

The following evidence retention periods identify the period of time an entity is required to retain specific evidence to demonstrate compliance. For instances where the evidence retention period specified below is shorter than the time since the last audit, the Compliance Enforcement Authority may ask an entity to provide other evidence to show that it was compliant for the full time period since the last audit.

The Transmission Owner, Generator Owner, and Distribution Provider shall each keep data or evidence to ~~demonstrate~~show compliance as identified below unless directed by its Compliance Enforcement Authority to retain specific evidence for a longer period of time as part of an investigation.

For Requirement R1, the Transmission Owner, Generator Owner, and Distribution Provider shall each keep its current dated Protection System Maintenance Program, as well as any superseded versions since the preceding compliance audit, including the documentation that specifies the type of maintenance program applied for each Protection System ~~component type~~Component Type.

~~**Component** – *A component is any individual discrete piece of equipment included in a Protection System, including but not limited to a protective relay or current sensing device. The designation of what constitutes a control circuit component is very dependent upon how an entity performs and tracks the testing of the control circuitry. Some entities test their control circuits on a breaker basis whereas others test their circuitry on a local zone of protection basis. Thus, entities are allowed the latitude to designate their own definitions of control circuit components. Another example of where the entity has some discretion on determining what constitutes a single component is the voltage and current sensing devices, where the entity may choose either to designate a full three-phase set of such devices or a single device as a single component.*~~

For Requirement R2, Requirement R3, Requirement R4, and Requirement ~~R3~~R5, the Transmission Owner, Generator Owner, and Distribution Provider shall each keep documentation of the two most recent performances of each distinct maintenance activity for the Protection System ~~**components**~~Components, or all performances of each distinct maintenance activity for the Protection System ~~component~~Component since the previous scheduled audit date, whichever is longer.

The Compliance Enforcement Authority shall keep the last ~~periodic~~ audit ~~report~~records and all requested and submitted subsequent ~~compliance~~audit records.

1.4. Additional Compliance Information

None.

2. Violation Severity Levels

Requirement Number	Lower VSL	Moderate VSL	High VSL	Severe VSL
R1	The responsible entity's PSMP failed to specify whether one ~~component type~~Component Type is being addressed by time-based or performance-based maintenance, or a combination of both. (Part 1.~~2~~1) OR The responsible entity's PSMP failed to include applicable station batteries in a time-based program. (Part 1.1)	~~The responsible entity's PSMP failed to address one component type included in the definition of 'Protection System' (Part 1.1)~~ ~~OR~~ The responsible entity's PSMP failed to specify whether two ~~component types~~Component Types are being addressed by time-based or performance-based maintenance, or a combination of both. (Part 1.~~2~~1)	The responsible ~~entity's PSMP failed to address two component types included in the definition of 'Protection System' (Part 1.1)~~ ~~OR~~ ~~The responsible entity's~~entities' PSMP failed to include ~~station batteries in a time-based program (Part 1.2)~~ ~~OR~~ ~~The responsible entity failed to include all maintenance activities or intervals relevant for the identified~~the applicable monitoring attributes applied to each Protection System Component Type consistent with the maintenance intervals specified in Tables 1-1 through 1-5, Table 2, and Table 3~~. (Part 1.3 and 1.4)~~ where monitoring is used to extend the maintenance intervals beyond those specified for unmonitored Protection System Components. (Part 1.2).	The responsible entity ~~has not established~~failed to establish a PSMP. OR ~~The responsible entity's PSMP failed to address three or more component types included in the definition of 'Protection System' (Part 1.1)~~ ~~OR~~ The responsible entity failed to specify whether three or more ~~component types~~Component Types are being addressed by time-based or performance-based maintenance, or a combination of both. (Part 1.~~2~~1).
R2	The responsible entity uses performance-based maintenance intervals in its PSMP but ~~has:~~ ~~1) Failed~~failed to reduce ~~countable events~~Countable Events to less than 4% within three years. ~~OR~~	NA	The responsible entity uses performance-based maintenance intervals in its PSMP but ~~has~~ failed to reduce ~~countable events~~Countable Events to less than 4% within four years.	The responsible entity uses performance-based maintenance intervals in its PSMP but ~~has~~: 1) Failed to establish the ~~entire~~ technical justification described within Requirement R2 for the initial use of the performance-based PSMP

Requirement Number	Lower VSL	Moderate VSL	High VSL	Severe VSL
	~~2) Failed to annually document program activities, results, maintenance dates, or countable events for 5% or less of components in any individual segment.~~			OR 2) Failed to reduce ~~countable events~~Countable Events to less than 4% within five years OR 3) ~~Failed to annually document program activities, results, maintenance dates, or countable events for over 5% of components in any individual segment~~ ~~OR~~ ~~4)~~ Maintained a ~~segment~~Segment with less than 60 ~~components~~Components OR ~~5~~4) Failed to: • Annually update the list of ~~components~~Components, OR • ~~Perform~~Annually perform maintenance on the greater of 5% of the segment population or 3 ~~components~~Components, OR • Annually analyze the program activities and results for each ~~segment~~Segment.
R3	~~The responsible entity has failed to implement and follow scheduled program on 5% or less of total Protection System components.~~ ~~OR~~	~~The responsible entity has failed to implement and follow scheduled program on greater than 5%, but no more than 10% of total Protection System components.~~	~~The responsible entity has failed to implement and follow scheduled program on greater than 10%, but no more than 15% of total Protection System components.~~	~~The responsible entity has failed to implement and follow scheduled program on greater than 15% of total Protection System components.~~

Requirement Number	Lower VSL	Moderate VSL	High VSL	Severe VSL
	~~The responsible entity has failed to initiate resolution on 5% or less of unresolved maintenance issues.~~For Protection System Components included within a time-based maintenance program, the responsible entity failed to maintain 5% or less of the total Components included within a specific Protection System Component Type, in accordance with the minimum maintenance activities and maximum maintenance intervals prescribed within Tables 1-1 through 1-5, Table 2, and Table 3.	~~OR~~ ~~The responsible entity has failed to initiate resolution on greater than 5%, but less than or equal to 10% of unresolved maintenance issues.~~For Protection System Components included within a time-based maintenance program, the responsible entity failed to maintain more than 5% but 10% or less of the total Components included within a specific Protection System Component Type, in accordance with the minimum maintenance activities and maximum maintenance intervals prescribed within Tables 1-1 through 1-5, Table 2, and Table 3.	~~OR~~ ~~The responsible entity has failed to initiate resolution on greater than 10%, but less than or equal to 15% of unresolved maintenance issues.~~For Protection System Components included within a time-based maintenance program, the responsible entity failed to maintain more than 10% but 15% or less of the total Components included within a specific Protection System Component Type, in accordance with the minimum maintenance activities and maximum maintenance intervals prescribed within Tables 1-1 through 1-5, Table 2, and Table 3.	~~OR~~ ~~The responsible entity has failed to initiate resolution on greater than 15% of unresolved maintenance issues.~~For Protection System Components included within a time-based maintenance program, the responsible entity failed to maintain more than 15% of the total Components included within a specific Protection System Component Type, in accordance with the minimum maintenance activities and maximum maintenance intervals prescribed within Tables 1-1 through 1-5, Table 2, and Table 3.
R4	For Protection System Components included within a performance-based maintenance program, the responsible entity failed to maintain 5% or less of the annual scheduled maintenance for a specific Protection System Component Type in accordance with their performance-based PSMP.	For Protection System Components included within a performance-based maintenance program, the responsible entity failed to maintain more than 5% but 10% or less of the annual scheduled maintenance for a specific Protection System Component Type in accordance with their performance-based PSMP.	For Protection System Components included within a performance-based maintenance program, the responsible entity failed to maintain more than 10% but 15% or less of the annual scheduled maintenance for a specific Protection System Component Type in accordance with their performance-based PSMP.	For Protection System Components included within a performance-based maintenance program, the responsible entity failed to maintain more than 15% of the annual scheduled maintenance for a specific Protection System Component Type in accordance with their performance-based PSMP.
R5	The responsible entity failed to undertake efforts to correct 5 or less Unresolved Maintenance Issues.	The responsible entity failed to undertake efforts to correct greater than 5, but less than or equal to 10 Unresolved Maintenance Issues.	The responsible entity failed to undertake efforts to correct greater than 10, but less than or equal to 15 Unresolved Maintenance Issues.	The responsible entity failed to undertake efforts to correct greater than 15 Unresolved Maintenance Issues.

E. Regional Variances

None

F. Supplemental Reference Document

The following documents present a detailed discussion about determination of maintenance intervals and other useful information regarding establishment of a maintenance program…

1. PRC-005-2 Protection System Maintenance Supplementary Reference and FAQ — July 2011.

Version History

Version	Date	Action	Change Tracking
2	TBD	Complete revision, absorbing maintenance requirements from PRC-005-1, PRC-005-1a, PRC-008-0, PRC-011-0, PRC-017	Complete revision

Table 1-1 Component Type - Protective Relay Excluding distributed UFLS and distributed UVLS (see Table 3)		
Component Attributes	**Maximum Maintenance Interval**[1]	**Maintenance Activities**
Any unmonitored protective relay not having all the monitoring attributes of a category below.	6 calendar years	For all unmonitored relays: • Verify that settings are as specified For non-microprocessor relays: • Test and, if necessary calibrate For microprocessor relays: • Verify operation of the relay inputs and outputs that are essential to proper functioning of the Protection System. • Verify acceptable measurement of power system input values.
Monitored microprocessor protective relay with the following: • Internal self diagnosis and alarming (see Table 2). • Voltage and/or current waveform sampling three or more times per power cycle, and conversion of samples to numeric values for measurement calculations by microprocessor electronics. • Alarming for power supply failure (see Table 2).	12 calendar years	Verify: • Settings are as specified. • Operation of the relay inputs and outputs that are essential to proper functioning of the Protection System. • Acceptable measurement of power system input values.

[1] For the tables in this standard, a calendar year starts on the first day of a new year (January 1) after a maintenance activity has been completed. For the tables in this standard, a calendar month starts on the first day of the first month after a maintenance activity has been completed.

Monitored microprocessor protective relay with preceding row attributes and the following: • Ac measurements are continuously verified by comparison to an independent ac measurement source, with alarming for excessive error~~.~~ (See Table 2~~)~~). • Some or all binary or status inputs and control outputs are monitored by a process that continuously demonstrates ability to perform as designed, with alarming for failure~~.~~ (See Table 2~~)~~). • Alarming for change of settings~~.~~ (See Table 2~~)~~).	12 calendar years	Verify only the unmonitored relay inputs and outputs that are essential to proper functioning of the Protection System.

Table 1-2 Component Type - Communications Systems Excluding distributed UFLS and distributed UVLS (see Table 3)		
Component Attributes	**Maximum Maintenance Interval**	**Maintenance Activities**
Any unmonitored communications system necessary for correct operation of protective functions, and not having all the monitoring attributes of a category below.	4 calendar months	Verify that the communications system is functional.
	6 calendar years	Verify that the channel meets performance criteria pertinent to the communications technology applied (e.g. signal level, reflected power, or data error rate). Verify operation of communication system inputs and outputs that are essential ~~signals~~ to ~~and from other~~proper functioning of the Protection System ~~components~~.

Any communications system with continuous monitoring or periodic automated testing for the presence of the channel function, and alarming for loss of function. (See Table 2)).	12 calendar years	Verify that the channel meets performance criteria pertinent to the communications technology applied (e.g. signal level, reflected power, or data error rate). Verify operation of communication system inputs and outputs that are essential signals to and from otherproper functioning of the Protection System components.
Any communications system with continuous monitoring or periodic automated testing for the performance of the channel using criteria pertinent to the communications technology applied (e.g. signal level, reflected power, or data error rate, and alarming for excessive performance degradation). (See Table 2)	No periodic maintenance specified	None.

Table 1-3 Component Type - Voltage and Current Sensing Devices Providing Inputs to Protective Relays Excluding distributed UFLS and distributed UVLS (see Table 3)		
Component Attributes	**Maximum Maintenance Interval**	**Maintenance Activities**
Any voltage and current sensing devices not having monitoring attributes of the category below.	12 calendar years	Verify that current and voltage signal values are provided to the protective relays.

Voltage and Current Sensing devices connected to microprocessor relays with AC measurements are continuously verified by comparison of sensing input value, as measured by the microprocessor relay, to an independent ac measurement source, with alarming for unacceptable error or failure (see Table 2).	No periodic maintenance specified	None.

Table 1-4(a) Component Type – Protection System Station dc Supply Using Vented Lead-Acid (VLA) Batteries Excluding distributed UFLS and distributed UVLS (see Table 3) Protection System Station dc supply used only for non-BES interrupting devices for SPS, non-distributed UFLS systems, or non-distributed UVLS systems is excluded (see Table 1-4(e)).		
Component Attributes	**Maximum Maintenance Interval**	**Maintenance Activities**
Protection System Station dc supply using **Vented Lead-Acid (VLA) batteries** not having monitoring attributes of Table 1-4(f). ~~Protection System Station dc supply for non-BES interrupting devices for SPS or non-distributed UVLS systems are excluded (see Table 1-4(e)).~~	4 Calendar Months	Verify: • Station dc supply voltage Inspect: • Electrolyte level • For unintentional grounds
	18 Calendar Months	Verify: • Float voltage of battery charger • Battery continuity • Battery terminal connection resistance • Battery intercell or unit-to-unit connection resistance Inspect: • Cell condition of all individual battery cells where cells are visible – or measure battery cell/unit internal ohmic values where the cells are not visible • Physical condition of battery rack
	18 Calendar Months -or- 6 Calendar Years	Verify that the station battery can perform as designed by evaluating the measured cell/unit internal ohmic values to station battery baseline. -or- Verify that the station battery can perform as designed by conducting a performance, service, or modified performance capacity test of the entire battery bank.

Table 1-4(b) Component Type – Protection System Station dc Supply Using Valve-Regulated Lead-Acid (VRLA) Batteries Excluding distributed UFLS and distributed UVLS (see Table 3) Protection System Station dc supply used only for non-BES interrupting devices for SPS, non-distributed UFLS systems, or non-distributed UVLS systems is excluded (see Table 1-4(e)).		
Component Attributes	**Maximum Maintenance Interval**	**Maintenance Activities**
Protection System Station dc supply **with Valve Regulated Lead-Acid (VRLA) batteries** not having monitoring attributes of Table 1-4(f). ~~Station dc supply for non-BES interrupting devices for SPS or non-distributed UFLS and UVLS systems are excluded (see Table 1-4(e)).~~	4 Calendar Months	Verify: • Station dc supply voltage Inspect: • For unintentional grounds
	6 Calendar Months	Inspect: • Condition of all individual units by measuring battery cell/unit internal ohmic values.
	18 Calendar Months	Verify: • Float voltage of battery charger • Battery continuity • Battery terminal connection resistance • Battery intercell or unit-to-unit connection resistance Inspect: • Physical condition of battery rack
	6 Calendar Months -or- 3 Calendar Years	Verify that the station battery can perform as designed by evaluating the measured cell/unit internal ohmic values to station battery baseline. -or- Verify that the station battery can perform as designed by conducting a performance, service, or modified performance capacity test of the entire battery bank.

Table 1-4(c) Component Type – Protection System Station dc Supply Using Nickel-Cadmium (NiCad) Batteries Excluding distributed UFLS and ~~non-~~distributed UVLS (see Table 3) Station dc supply used only for non-BES interrupting devices for SPS, non-distributed UFLS system, or non-distributed UVLS systems is excluded (see Table 1-4(e)).		
Component Attributes	**Maximum Maintenance Interval**	**Maintenance Activities**
Protection System Station dc supply **Nickel-Cadmium (NiCad) batteries** not having monitoring attributes of Table 1-4(f). ~~Station dc supply for non-BES interrupting devices for SPS or non-distributed UFLS and UVLS systems are excluded (see Table 1-4(e)).~~	4 Calendar Months	Verify: • Station dc supply voltage Inspect: • Electrolyte level • For unintentional grounds
	18 Calendar Months	Verify: • Float voltage of battery charger • Battery continuity • Battery terminal connection resistance • Battery intercell or unit-to-unit connection resistance Inspect: • Cell condition of all individual battery cells. • Physical condition of battery rack
	6 Calendar Years	Verify that the station battery can perform as designed by conducting a performance service, or modified performance capacity test of the entire battery bank.

Table 1-4(d) Component Type – Protection System Station dc Supply Using Non Battery Based Energy Storage Excluding distributed UFLS and distributed UVLS (see Table 3) Station dc supply used only for non-BES interrupting devices for SPS, non-distributed UFLS system, or non-distributed UVLS systems is excluded (see Table 1-4(e)).		
Component Attributes	**Maximum Maintenance Interval**	**Maintenance Activities**
Any Protection System station dc supply not using a battery and not having monitoring attributes of Table 1-4(f). ~~Protection System Station dc supply for non-BES interrupting devices for SPS or non-distributed UFLS and UVLS systems are excluded (see Table 1-4(e)).~~	4 Calendar Months	Verify: • Station dc supply voltage Inspect: • For unintentional grounds
	18 Calendar Months	Inspect: Condition of non-battery based dc supply
	6 Calendar Years	Verify that the dc supply can perform as designed when ac power is not present.

Table 1-4(e) Component Type – Protection System Station dc Supply for non-BES Interrupting ~~Device~~Devices for SPS, non-distributed UFLS, and non-distributed UVLS ~~and UFLS~~ systems		
Component Attributes	**Maximum Maintenance Interval**	**Maintenance Activities**
Any Protection System dc supply used only for tripping only non-BES interrupting devices as part of a SPS, non-distributed UFLS, or non-distributed UVLS ~~and UFLS~~ system and not having monitoring attributes of Table 1-4(f).	When control circuits are verified (See Table 1-5)	Verify Station dc supply voltage.

Table 1-4(f) Exclusions for Protection System Station dc Supply Monitoring Devices and Systems		
Component Attributes	**Maximum Maintenance Interval**	**Maintenance Activities**
Any station dc supply with high and low voltage monitoring and alarming of the battery charger voltage to detect charger overvoltage and charger failure~~.~~ (See Table 2~~)~~).	No periodic maintenance specified	No periodic verification of station dc supply voltage is required.
Any battery based station dc supply with electrolyte level monitoring and alarming in every cell (See Table 2~~)~~).		No periodic inspection of the electrolyte level for each cell is required.
Any station dc supply with unintentional dc ground monitoring and alarming (See Table 2~~)~~).		No periodic inspection of unintentional dc grounds is required.
Any station dc supply with charger float voltage monitoring and alarming to ensure correct float voltage is being applied on the station dc supply (See Table 2~~)~~).		No periodic verification of float voltage of battery charger is required.
Any battery based station dc supply with monitoring and alarming of battery string continuity (See Table 2~~)~~).		No periodic verification of the battery continuity is required.
Any battery based station dc supply with monitoring and alarming of the intercell and/or terminal connection detail resistance of the entire battery (See Table 2~~)~~).		No periodic verification of the intercell and terminal connection resistance is required.
Any ~~lead acid battery based~~Valve Regulated Lead-Acid (VRLA) or Vented Lead-Acid (VLA) station ~~dc supply~~battery with internal ohmic value monitoring and alarming, and evaluating present values relative to baseline internal ohmic values for every cell/unit (See Table 2~~)~~).		~~.~~No periodic measurement and evaluation relative to baseline of battery cell/unit internal ohmic values is required to verify the station battery can perform as designed ~~.~~.
Any Valve Regulated Lead-Acid (VRLA) or Vented Lead-Acid (VLA) station battery with monitoring and alarming of each cell/unit internal ~~Ohmic~~ohmic value~~.~~ (See Table 2~~)~~).		No periodic inspection of the condition of all individual units by measuring battery cell/unit internal ohmic values of a station VRLA or Vented Lead-Acid (VLA) battery is required.

Table 1-5 **Component Type - Control Circuitry Associated With Protective Functions** **Excluding distributed UFLS and distributed UVLS (see Table 3)** **Note:** Table requirements apply to all Control Circuitry ~~components~~Components of Protection Systems, and SPSs except as noted.		
Component Attributes	**Maximum Maintenance Interval**	**Maintenance Activities**
Trip coils or actuators of circuit breakers, interrupting devices, or mitigating devices (regardless of any monitoring of the control circuitry).	6 calendar years	Verify that each trip coil is able to operate the circuit breaker, interrupting device, or mitigating device.
~~Unmonitored control circuitry associated with SPS~~Electromechanical lockout devices which are directly in a trip path from the protective relay to the interrupting device trip coil (regardless of any monitoring of the control circuitry).	~~12~~6 calendar years	Verify ~~all paths of the control circuits essential for proper~~electrical operation of ~~the SPS~~electromechanical lockout devices.
~~Electromechanical lockout and/or tripping auxiliary devices which are directly in a trip path from the protective relay to the interrupting device trip coil.~~Unmonitored control circuitry associated with SPS.	~~6~~12 calendar years	Verify ~~electrical~~all paths of the control circuits essential for proper operation of ~~electromechanical trip and auxiliary devices~~the SPS.
Unmonitored control circuitry associated with protective functions inclusive of all auxiliary relays.	12 calendar years	Verify all paths of the trip circuits inclusive of all auxiliary relays through the trip coil(s) of the circuit breakers or other interrupting devices.
Control circuitry ~~whose continuity~~associated with protective functions and ~~energization~~ /or ~~ability to operate are~~SPS whose integrity is monitored and alarmed (See Table 2).	No periodic maintenance specified	None.

Table 2 – Alarming Paths and Monitoring In Tables 1-1 through 1-5 and Table 3, alarm attributes used to justify extended maximum maintenance intervals and/or reduced maintenance activities are subject to the following maintenance requirements		
Component Attributes	**Maximum Maintenance Interval**	**Maintenance Activities**
Any alarm path through which alarms in Tables 1-1 through 1-5 and Table 3 are conveyed from the alarm origin to the location where corrective action can be initiated, and not having all the attributes of the "Alarm Path with monitoring" category below. Alarms are reported within 24 hours of ~~DETECTION~~detection to a location where corrective action can be initiated.	12 Calendar Years	Verify that the alarm path conveys alarm signals to a location where corrective action can be initiated.
Alarm Path with monitoring: The location where corrective action is taken receives an alarm within 24 hours for failure of any portion of the alarming path from the alarm origin to the location where corrective action can be initiated.	No periodic maintenance specified	None.

Table 3 Maintenance Activities and Intervals for distributed UFLS and distributed UVLS Systems		
Component Attributes	**Maximum Maintenance Interval**	**Maintenance Activities**
Any unmonitored protective relay not having all the monitoring attributes of a category below.	6 calendar years	Verify that settings are as specified For non-microprocessor relays: • Test and, if necessary calibrate For microprocessor relays: • Verify operation of the relay inputs and outputs that are essential to proper functioning of the Protection System. • Verify acceptable measurement of power system input values.
Monitored microprocessor protective relay with the following: • Internal self diagnosis and alarming (See Table 2). • Voltage and/or current waveform sampling three or more times per power cycle, and conversion of samples to numeric values for measurement calculations by microprocessor electronics. Alarming for power supply failure (See Table 2).	12 calendar years	Verify: • Settings are as specified. • Operation of the relay inputs and outputs that are essential to proper functioning of the Protection System. • Acceptable measurement of power system input values. •

Monitored microprocessor protective relay with preceding row attributes and the following: • Ac measurements are continuously verified by comparison to an independent ac measurement source, with alarming for excessive error~~.~~ (See Table 2~~)~~). • Some or all binary or status inputs and control outputs are monitored by a process that continuously demonstrates ability to perform as designed, with alarming for failure~~.~~ (See Table 2~~)~~). Alarming for change of settings~~.~~ (See Table 2~~)~~).	12 calendar years	Verify only the unmonitored relay inputs and outputs that are essential to proper functioning of the Protection System.
Voltage and/or current sensing devices associated with UFLS or UVLS systems.	12 calendar years	Verify that current and/or voltage signal values are provided to the protective relays.
Protection System dc supply for tripping ~~only~~ non-BES interrupting devices ~~as part of~~used only for a UFLS or UVLS system.	12 calendar years	Verify Protection System dc supply voltage.
Control circuitry between the UFLS or UVLS relays and electromechanical lockout and/or tripping auxiliary devices~~.~~ (excludes non-BES interrupting device trip coils).	12 calendar years	Verify the path from the relay to the lockout and/or tripping auxiliary relay (including essential supervisory logic).
Electromechanical lockout and/or tripping auxiliary devices associated only with UFLS or UVLS systems~~.~~ (excludes non-BES interrupting device trip coils).	12 calendar years	Verify electrical operation of electromechanical lockout and/or tripping auxiliary devices.
Control circuitry between the electromechanical lockout and/or tripping auxiliary devices and the non-BES interrupting devices in UFLS or UVLS systems, or between UFLS or UVLS relays (with no interposing electromechanical lockout or auxiliary device) and the non-BES interrupting devices~~.~~ (excludes non-BES interrupting device trip coils).	No periodic maintenance specified	None.
Trip coils of non-BES interrupting devices in UFLS or UVLS systems.	No periodic maintenance specified	None.

PRC-005 — Attachment A

Criteria for a Performance-Based Protection System Maintenance Program

Purpose: To establish a technical basis for initial and continued use of a performance-based Protection System Maintenance Program (PSMP).

To establish the technical justification for the initial use of a performance-based PSMP:

1. Develop a list with a description of ~~components~~Components included in each designated ~~segment~~Segment of the Protection System ~~component~~Component population, with a minimum ~~segment~~**Segment** population of 60 ~~components~~Components.
2. Maintain the ~~components~~Components in each ~~segment~~Segment according to the time-based maximum allowable intervals established in Tables 1-1 through 1-5 and Table 3 until results of maintenance activities for the ~~segment~~Segment are available for a minimum of 30 individual ~~components~~Components of the ~~segment~~Segment.
3. Document the maintenance program activities and results for each ~~segment~~Segment, including maintenance dates and ~~countable events~~Countable Events for each included ~~component~~Component.
4. Analyze the maintenance program activities and results for each ~~segment~~Segment to determine the overall performance of the ~~segment~~Segment and develop maintenance intervals.

Segment – *Protection Systems or components of a consistent design standard, or a particular model or type from a single manufacturer that typically share other common elements. Consistent performance is expected across the entire population of a ~~segment~~Segment. A ~~segment~~Segment must contain at least sixty (60) individual components.*

Countable Event – *A component which has failed and requires repair or replacement, any condition discovered during the maintenance activities in Tables 1-1 through 1-5 and Table 3 which requires corrective action, or a Misoperation attributed to hardware failure or calibration failure. Misoperations due to product design errors, software errors, relay settings different from specified settings, Protection System component configuration errors, or Protection System application errors are not included in Countable Events.*

5. Determine the maximum allowable maintenance interval for each ~~segment~~Segment such that the ~~segment~~Segment experiences ~~countable events~~**Countable Events** on no more than 4% of the ~~components~~Components within the ~~segment~~Segment, for the greater of either the last 30 ~~components~~Components maintained or all ~~components~~Components maintained in the previous year.

To maintain the technical justification for the ongoing use of a performance-based PSMP:

1. At least annually, update the list of Protection System ~~components~~Components and ~~segments~~Segments and/or description if any changes occur within the ~~segment~~Segment.
2. Perform maintenance on the greater of 5% of the ~~components~~Components (addressed in the performance based PSMP) in each ~~segment~~Segment or 3 individual ~~components~~Components within the ~~segment~~Segment in each year.

3. For the prior year, analyze the maintenance program activities and results for each ~~segment~~Segment to determine the overall performance of the ~~segment~~Segment.
4. Using the prior year's data, determine the maximum allowable maintenance interval for each ~~segment~~Segment such that the ~~segment~~Segment experiences ~~countable events~~Countable Events on no more than 4% of the ~~components~~Components within the ~~segment~~Segment, for the greater of either the last 30 ~~components~~Components maintained or all ~~components~~Components maintained in the previous year.
5. If the ~~components~~Components in a Protection System ~~segment~~Segment maintained through a performance-based PSMP experience 4% or more ~~countable events~~Countable Events, develop, document, and implement an action plan to reduce the ~~countable events~~Countable Events to less than 4% of the ~~segment~~Segment population within 3 years.

NERC
NORTH AMERICAN ELECTRIC
RELIABILITY CORPORATION

Implementation Plan

Project 2007-17 Protection Systems Maintenance and Testing
PRC-005-02

Standards Involved
Approval:

- PRC-005-2 – Protection System Maintenance and Testing

Retirements:

- PRC-005-1a – Transmission and Generation Protection System Maintenance and Testing
- PRC-008-0 – Implementation and Documentation of Underfrequency Load Shedding Equipment Maintenance Program
- PRC-011-0 – Undervoltage Load Shedding System Maintenance and Testing
- PRC-017-0 – Special Protection System Maintenance and Testing

Prerequisite Approvals:
Revised definition of "Protection System"

Background:
The Implementation Plan reflects consideration of the following:

1. The requirements set forth in the proposed standard establish minimum maintenance activities for Protection System component types and the maximum allowable maintenance intervals for these maintenance activities. The maintenance activities established may not be presently performed by some entities and the established maximum allowable intervals may be shorter than those currently in use by some entities.
2. For entities not presently performing a maintenance activity or using longer intervals than the maximum allowable intervals established in the proposed standard, it is unrealistic for those entities to be immediately compliant with the new activities or intervals. Further, entities should be allowed to become compliant in such a way as to facilitate a continuing maintenance program.
3. Entities that have previously been performing maintenance within the newly specified intervals may not have all the documentation needed to demonstrate compliance with all of the maintenance activities specified.

4. The Implementation Schedule set forth in this document requires that entities develop their revised Protection System Maintenance Program within twelve (12) months following applicable regulatory approvals, or in those jurisdictions where no regulatory approval is required, on the first day of the first calendar quarter twenty-four (24) months following NERC Board of Trustees adoption. This anticipates that it will take approximately twelve (12) months to achieve regulatory approvals following adoption by the NERC Board of Trustees.
5. The Implementation Schedule set forth in this document facilitates implementation of the more lengthy maintenance intervals within the revised Protection System Maintenance Program in approximately equally-distributed steps over those intervals prescribed for each respective maintenance activity in order that entities may implement this standard in a systematic method that facilitates an effective ongoing Protection System Maintenance Program.

General Considerations:

Each Transmission Owner, Generator Owner, and Distribution Provider shall maintain documentation to demonstrate compliance with PRC-005-1a, PRC-008-0, PRC-011-0, and PRC-017-0 until that entity meets the requirements of PRC-005-2 in accordance with this implementation plan.

While entities are transitioning to the requirements of PRC-005-2, each entity must be prepared to identify:

- All of its applicable Protection System components.
- Whether each component has last been maintained according to PRC-005-2 or under PRC-005-1a, PRC-008-0, PRC-011-0, or PRC-017-0, or a combination thereof.

For activities being added to an entity's program as part of PRC-005-2 implementation, evidence may be available to show only a single performance of the activity until two maintenance intervals have transpired following initial implementation of PRC-005-2.

Retirement of Existing Standards:

The existing Standards PRC-005-1a, PRC-008-0, PRC-011-0, and PRC-017-0 shall be retired at midnight of the day immediately prior to the first day of the first calendar quarter following applicable regulatory approval of PRC-005-2 in all jurisdictions.

Implementation Plan for Definition:

Protection System Maintenance Program – Entities shall use this definition when implementing any portions of R1, R2 R3, R4 and R5 which use this defined term.

Implementation Plan for Requirements R1, R2 and R5:

Entities shall be 100% compliant on the first day of the first calendar quarter twelve (12) months following applicable regulatory approvals, or in those jurisdictions where no regulatory approval is required, on the first day of the first calendar quarter twenty-four (24) months following NERC Board of Trustees adoption.

Implementation Plan for Requirements R3 and R4:

1. For Protection System component maintenance activities with maximum allowable intervals of less than one (1) calendar year, as established in Tables 1-1 through 1-5:
   - The entity shall be 100% compliant with PRC-005-2 on the first day of the first calendar quarter eighteen (18) months following applicable regulatory approval, or in those jurisdictions where no regulatory approval is required, on the first day of the first calendar quarter thirty (30) months following NERC Board of Trustees adoption.
2. For Protection System component maintenance activities with maximum allowable intervals one (1) calendar year or more, but two (2) calendar years or less, as established in Tables 1-1 through 1-5:
   - The entity shall be 100% compliant with PRC-005-2 on the first day of the first calendar quarter thirty-six (36) months following applicable regulatory approval, or in those jurisdictions where no regulatory approval is required, on the first day of the first calendar quarter forty-eight (48) months following NERC Board of Trustees adoption.
3. For Protection System component maintenance activities with maximum allowable intervals of three (3) calendar years, as established in Tables 1-1 through 1-5:
   - The entity shall be at least 30% compliant with PRC-005-2 on the first day of the first calendar quarter twenty-four (24) months following applicable regulatory approval (or, for generating plants with scheduled outage intervals exceeding two years, at the conclusion of the first succeeding maintenance outage), or in those jurisdictions where no regulatory approval is required, on the first day of the first calendar quarter thirty-six (36) months following NERC Board of Trustees adoption.
   - The entity shall be at least 60% compliant with PRC-005-2 on the first day of the first calendar quarter thirty-six (36) months following applicable regulatory approval, or in those jurisdictions where no regulatory approval is required, on the first day of the first calendar quarter forty-eight (48) months following NERC Board of Trustees adoption.
   - The entity shall be 100% compliant with PRC-005-2 on the first day of the first calendar quarter forty-eight (48) months following applicable regulatory approval, or in those jurisdictions where no regulatory approval is required, on the first day of the first calendar quarter sixty (60) months following NERC Board of Trustees adoption.

4. For Protection System component maintenance activities with maximum allowable intervals of six (6) calendar years, as established in Tables 1-1 through 1-5 and Table 3:
   - The entity shall be at least 30% compliant with PRC-005-2 on the first day of the first calendar quarter thirty-six (36) months following applicable regulatory approval (or, for generating plants with scheduled outage intervals exceeding three years, at the conclusion of the first succeeding maintenance outage), or in those jurisdictions where no regulatory approval is required, on the first day of the first calendar quarter forty-eight (48) months following NERC Board of Trustees adoption.
   - The entity shall be at least 60% compliant with PRC-005-2 on the first day of the first calendar quarter sixty (60) months following applicable regulatory approval, or in those jurisdictions where no regulatory approval is required, on the first day of the first calendar quarter seventy-two (72) months following NERC Board of Trustees adoption.
   - The entity shall be 100% compliant with PRC-005-2 on the first day of the first calendar quarter eighty-four (84) months following applicable regulatory approval, or in those jurisdictions where no regulatory approval is required, on the first day of the first calendar quarter ninety-six (96) months following NERC Board of Trustees adoption.
5. For Protection System component maintenance activities with maximum allowable intervals of twelve (12) calendar years, as established in Tables 1-1 through 1-5, Table 2, and Table 3:
   - The entity shall be at least 30% compliant with PRC-005-2 on the first day of the first calendar quarter sixty (60) months following applicable regulatory approval, or in those jurisdictions where no regulatory approval is required, on the first day of the first calendar quarter seventy-two (72) months following NERC Board of Trustees adoption.
   - The entity shall be at least 60% compliant with PRC-005-2 on the first day of the first calendar quarter following one hundred eight (108) months following applicable regulatory approval, or in those jurisdictions where no regulatory approval is required, on the first day of the first calendar quarter one hundred twenty (120) months following NERC Board of Trustees adoption.
   - The entity shall be 100% compliant with PRC-005-2 on the first day of the first calendar quarter one hundred fifty-six (156) months following applicable regulatory approval, or in those jurisdictions where no regulatory approval is required, on the first day of the first calendar quarter one hundred sixty-eight (168) months following NERC Board of Trustees adoption.

Applicability:

This standard applies to the following functional entities:

- Transmission Owner
- Generator Owner
- Distribution Provider

NERC
NORTH AMERICAN ELECTRIC RELIABILITY CORPORATION

Implementation Plan

Project 2007-17 Protection Systems Maintenance and Testing
PRC-005-02

Standards Involved
Approval:

- PRC-005-2 – Protection System Maintenance and Testing

Retirements ~~(phased to coincide with each entity's implementation of PRC-005-2 as specified in the Implementation Plan for Requirements R1 through R3 later in this document)~~:

- ~~PRC-005-1 – Transmission and Generation Protection System Maintenance and Testing~~
- PRC-005-1a – Transmission and Generation Protection System Maintenance and Testing
- PRC-008-0 – Implementation and Documentation of Underfrequency Load Shedding Equipment Maintenance Program
- PRC-011-0 – Undervoltage Load Shedding System Maintenance and Testing
- PRC-017-0 – Special Protection System Maintenance and Testing

Prerequisite Approvals:
Revised definition of "Protection System"

Background:
The Implementation Plan reflects consideration of the following:

1. The requirements set forth in the proposed standard establish minimum maintenance activities for Protection System component types and the maximum allowable maintenance intervals for these maintenance activities~~for the first time~~. The maintenance activities established may not be presently performed by some entities and the established maximum allowable intervals may be shorter than those currently in use by some entities.
2. For entities not presently performing a maintenance activity or using longer intervals than the maximum allowable intervals established in the proposed standard, it is unrealistic for those entities to be immediately ~~in compliance~~compliant with the new activities or intervals. Further, entities should be allowed to become compliant in such a way as to facilitate a continuing maintenance program.

3. Entities that have previously been performing maintenance within the newly specified intervals may not have all the documentation needed to demonstrate compliance with all of the maintenance activities specified.

4. The Implementation Schedule set forth in this document requires that entities develop their revised Protection System Maintenance Program within twelve (12) months following applicable regulatory approvals, or in those jurisdictions where no regulatory approval is required, on the first day of the first calendar quarter ~~twelve~~ twenty-four (24) months following NERC Board of Trustees adoption. This anticipates that it will take approximately twelve (12) months to achieve regulatory approvals following adoption by the NERC Board of Trustees.
5. The Implementation Schedule set forth in this document ~~further requires~~ facilitates implementation of the more lengthy maintenance intervals within the revised Protection System Maintenance Program in ~~roughly~~ approximately equally-distributed steps over ~~the maintenance~~those intervals prescribed for each respective maintenance activity in order that entities may implement this standard in a systematic method that facilitates an effective ongoing Protection System Maintenance Program.

General Considerations:

Each Transmission Owner, Generator Owner, and Distribution Provider shall maintain documentation to demonstrate compliance ~~follow the protection system maintenance and testing program it used to perform maintenance and testing to comply~~ with ~~PRC-005-1,~~ PRC-005-1a, PRC-008-0, PRC-011-0, and PRC-017-0 ~~(for the Protection System components identified in PRC-005-2 Tables 1-1 through 1-5, Table 2, and Table 3)~~ until that ~~Transmission Owner, Generator Owner or Distribution Provider~~entity meets ~~initial compliance~~the requirements of PRC-005-2 ~~for maintenance of the same Protection System component,~~ in accordance with ~~the phasing specified below~~this implementation plan.

~~For audits that are conducted d~~W~~uring the time period when~~ hile entities are ~~modifying~~ transitioning ~~their existing protection system maintenance and testing programs to become compliant with~~to the ~~maintenance activities and intervals specified in~~requirements of PRC-005-2, each ~~responsible~~ entity must be prepared to identify:

- All of its applicable ~~protection~~ Protection ~~system~~ System components.
- ~~For each component, w~~Whether ~~maintenance of that~~ each component ~~is being addressed~~has last been maintained according to PRC-005-2 or under ~~PRC-005-1,~~ PRC-005-1a, PRC-008-0, PRC-011-0, or PRC-017-0, or a combination thereof.

~~Evidence that each component has been maintained under the relevant requirements.~~For activities being added to an entity's program as part of PRC-005-2 implementation, evidence may be available to show only a single performance of the activity until two maintenance intervals have transpired following initial implementation of PRC-005-2.

Retirement of Existing Standards:

The existing Standards ~~PRC-005-1,~~ PRC-005-1a, PRC-008-0, PRC-011-0, and PRC-017-0 shall be retired at midnight of the day immediately prior to the first day of the first calendar quarter following ~~the latter of 156 months following~~ applicable regulatory approval of PRC-005-2 in all ~~jurisdictions~~ jurisdictions~~or 168 months following Board of Trustees adoption of PRC-005-2~~.

Implementation Plan for Definition:

Protection System Maintenance Program – Entities shall use this definition when implementing any portions of R1, R2 ~~and~~ R3, R4 and R5 which use this defined term.

Implementation Plan for Requirements R1, R2 and R5:

Entities shall be 100% compliant on the first day of the first calendar quarter twelve (12) months following applicable regulatory approvals, or in those jurisdictions where no regulatory approval is required, on the first day of the first calendar quarter twenty-~~one~~ four (~~21~~24) months following NERC Board of Trustees adoption.

Implementation Plan for Requirements ~~R2 and~~ R3 and R4:

~~Protection System Maintenance Program – Entities shall use this definition when implementing any portions of R1, R2 and R3 which use this defined term.~~

1. For Protection System component~~s~~ maintenance activities with maximum allowable intervals of less than one (1) calendar year, as established in Tables 1-1 through 1-5:
   - The entity shall be 100% compliant with PRC-005-2 on the first day of the first calendar quarter eighteen ~~15~~ (18) months following applicable regulatory approval, or in those jurisdictions where no regulatory approval is required, on the first day of the first calendar quarter thirty ~~24~~ (30) months following NERC Board of Trustees adoption.
2. For Protection System component~~s~~ maintenance activities with maximum allowable intervals one (1) calendar year or more, but two (2) calendar years or less, as established in Tables 1-1 through 1-5:
   - The entity shall be 100% compliant with PRC-005-2 on the first day of the first calendar quarter thirty-six (36) months following applicable regulatory approval, or in those jurisdictions where no regulatory approval is required, on the first day of the first calendar quarter forty-eight (48) months following NERC Board of Trustees adoption.
3. For Protection System component~~s~~ maintenance activities with maximum allowable intervals of three (3) calendar years, as established in Tables 1-1 through 1-5:
   - The entity shall be at least 30% compliant with PRC-005-2 on the first day of the first calendar quarter twenty-four (24) months following applicable regulatory approval (or, for generating plants with scheduled outage intervals exceeding two years, at the conclusion of the first succeeding maintenance outage), or in those jurisdictions where no regulatory approval is required, on the first day of the first calendar quarter thirty-six (36) months following NERC Board of Trustees adoption.
   - The entity shall be at least 60% compliant with PRC-005-2 on the first day of the first calendar quarter thirty-six (36) months following applicable regulatory approval, or in those jurisdictions where no regulatory approval is required, on the first day of the first calendar quarter forty-eight (48) months following NERC Board of Trustees adoption.

- The entity shall be 100% compliant with PRC-005-2 on the first day of the first calendar quarter forty-eight (48) months following applicable regulatory approval, or in those jurisdictions where no regulatory approval is required, on the first day of the first calendar quarter sixty (60) months following NERC Board of Trustees adoption.

4. For Protection System component~~s~~ maintenance activities with maximum allowable intervals of six (6) calendar years, as established in Tables 1-1 through 1-5 and Table 3:

   - The entity shall be at least 30% compliant with PRC-005-2 on the first day of the first calendar quarter thirty-six (36) months following applicable regulatory approval (or, for generating plants with scheduled outage intervals exceeding three years, at the conclusion of the first succeeding maintenance outage), or in those jurisdictions where no regulatory approval is required, on the first day of the first calendar quarter forty-eight (48) months following NERC Board of Trustees adoption.
   - The entity shall be at least 60% compliant with PRC-005-2 on the first day of the first calendar quarter sixty (60) months following applicable regulatory approval, or in those jurisdictions where no regulatory approval is required, on the first day of the first calendar quarter seventy-two (72) months following NERC Board of Trustees adoption.
   - The entity shall be 100% compliant with PRC-005-2 on the first day of the first calendar quarter eighty-four (84) months following applicable regulatory approval, or in those jurisdictions where no regulatory approval is required, on the first day of the first calendar quarter ninety-six (96) months following NERC Board of Trustees adoption.

5. For Protection System component~~s~~ maintenance activities with maximum allowable intervals of twelve (12) calendar years, as established in Tables 1-1 through 1-5, Table 2, and Table 3:

   - The entity shall be at least 30% compliant with PRC-005-2 on the first day of the first calendar quarter sixty (60) months following applicable regulatory approval, or in those jurisdictions where no regulatory approval is required, on the first day of the first calendar quarter seventy-two (72) months following NERC Board of Trustees adoption.
   - The entity shall be at least 60% compliant with PRC-005-2 on the first day of the first calendar quarter following one hundred eight (108) months following applicable regulatory approval, or in those jurisdictions where no regulatory approval is required, on the first day of the first calendar quarter one hundred twenty (120) months following NERC Board of Trustees adoption.
   - The entity shall be 100% compliant with PRC-005-2 on the first day of the first calendar quarter one hundred fifty-six (156) months following applicable regulatory approval, or in those jurisdictions where no regulatory approval is required, on the first day of the first calendar quarter one hundred sixty-eight (168) months following NERC Board of Trustees adoption.

Applicability:

This standard applies to the following functional entities:

- Transmission Owner~~s~~
- Generator Owner~~s~~
- Distribution Provider~~s~~
-

Standard Authorization Request Form

Title of Proposed Standard:	Protection System Maintenance (Project 2007-17)
Request Date:	May 7, 2007

SAR Requestor Information	**SAR Type** (*Check a box for each one that applies.*)	
Name: System Protection and Controls Task Force (Attachment A)	☐	New Standard
Primary Contact: Charles Rogers	X	Revision to existing Standards: PRC-005-1 — Transmission and Generation Protection System Maintenance and Testing PRC-008-0 — Underfrequency Load Shedding Equipment Maintenance Programs PRC-011-0 — UVLS System Maintenance and Testing PRC-017-0 — Special Protection System Maintenance and Testing
Telephone (517) 788-0027 Fax (517) 788-0917	X	Withdrawal of existing Standard
E-mail:cwrogers@cmsenergy.com	☐	Urgent Action

Purpose (Describe the purpose of the standard — what the standard will achieve in support of reliability.)

The purpose of standard PRC-005 should remain "To ensure all transmission and generation Protection Systems affecting the reliability of the Bulk Electric System (BES) are maintained and tested."

Industry Need (Provide a detailed statement justifying the need for the proposed standard, along with any supporting documentation.)

In Order 693, the Federal Energy Regulatory Commission directed that changes be made to these standards.

These standards should be consolidated into a single standard to reduce the costs of compliance and a number of technical short comings in these standards should be corrected to provide reliable performance when responding to abnormal system conditions.

Brief Description (Describe the proposed standard in sufficient detail to clearly define the scope in a manner that can be easily understood by others.)

Revise PRC-005-1 — Transmission and Generation Protection System Maintenance and Testing, to consolidate PRC-005-1, PRC-008-0 — Underfrequency Load Shedding Equipment Maintenance Programs; PRC-011-0 — UVLS System Maintenance and Testing; and PRC-017-0 — Special Protection System Maintenance and Testing into a single maintenance and testing standard. Standards PRC-008-0, PRC-011-0, and PRC-017-0 would then be withdrawn.

The revised PRC-005 standard should address the issues raised in the FERC Order 693, the issues raised by stakeholders during the development of Version 0 and Phase III & IV standards (Attachment D), and the issues addressed in the SPCTF report "Assessment of PRC-005-1 – Transmission and Generation Protection System Maintenance and Testing; with implications for PRC-008-0, PRC-011-0, and PRC-017-0" (Attachment B) The revised standard should also address the comments submitted by stakeholders during the development of Version 0, and Phase III & IV and should reflect improvements identified in the Reliability Standards Review Guidelines. (Attachment C)

Detailed Description:

The PRC-005, 008, 011, and 017 reliability standards are intended to assure that Protection Systems are maintained and tested so as to provide reliable performance when responding to abnormal system conditions. It is the responsibility of the Transmission Owner, Generator Owner, and Distribution Provider to ensure the Protection Systems are maintained and tested in such a manner that the protective systems operate to fulfill their function.

Applicable to all four standards — The listed requirements do not provide clear and sufficient guidance concerning the maintenance and testing of the Protection Systems to achieve the commonly stated purpose which is "To ensure all transmission and generation Protection Systems affecting the reliability of the Bulk Electric System (BES) are maintained and tested."

- Applicable to PRC-017 — Part of the stated purpose in PRC-017 is: "To ensure that maintenance and testing programs are developed and misoperations are analyzed and corrected." The phrase "and misoperations are analyzed and corrected" is not clearly appropriate in a maintenance and testing standard. That is the purpose is more appropriate in PRC-003 and PRC-004, which relate to the analysis and mitigation of protection system misoperations. Analysis of correct operations or misoperations may be an integral part of condition-based maintenance processes, but need not be mandated in a maintenance standard.
- Applicable to all four standards — The standards should clearly state which power system elements are being addressed.
- Applicable to all four standards — The requirements should reflect the inherent differences between various protection system technologies.
- Applicable to all four standards — The terms "maintenance programs" and "testing programs" should be clearly defined in the glossary. The terms "maintenance" and "testing" are not interchangeable, and the requirements must be clear in their application. Additional terms may also have to be added to the glossary for clarity.
- Applicable to all four standards — The requirements of the existing standards, as stated, support time-based maintenance and testing, and should be expanded to include condition-based and performance-based maintenance and testing. The requirements for maintenance and testing procedures need to have more specificity to insure that the stated intent of the standards is met to support review by the compliance monitor.

The revised standard should also include the general improvements identified in the attached Reliability Standard Review Guidelines (Attachment C) and should address the comments submitted by stakeholders (Attachment D).

Reliability Functions

The Standard will Apply to the Following Functions *(Check box for each one that applies.)*		
☐	Reliability Coordinator	Responsible for the real-time operating reliability of its Reliability Coordinator Area in coordination with its neighboring Reliability Coordinator's wide area view.
☐	Balancing Authority	Integrates resource plans ahead of time, and maintains load-interchange-resource balance within a Balancing Authority Area and supports Interconnection frequency in real time.
☐	Interchange Authority	Ensures communication of interchange transactions for reliability evaluation purposes and coordinates implementation of valid and balanced interchange schedules between Balancing Authority Areas.
☐	Planning Coordinator	Assesses the longer-term reliability of its Planning Coordinator Area.
☐	Resource Planner	Develops a >one year plan for the resource adequacy of its specific loads within a Planning Coordinator area.
☐	Transmission Planner	Develops a >one year plan for the reliability of the interconnected Bulk Electric System within its portion of the Planning Coordinator area.
☐	Transmission Service Provider	Administers the transmission tariff and provides transmission services under applicable transmission service agreements (e.g., the pro forma tariff).
☒	Transmission Owner	Owns and maintains transmission facilities.
☐	Transmission Operator	Ensures the real-time operating reliability of the transmission assets within a Transmission Operator Area.
☒	Distribution Provider	Delivers electrical energy to the End-use customer.
☒	Generator Owner	Owns and maintains generation facilities.
☐	Generator Operator	Operates generation unit(s) to provide real and reactive power.
☐	Purchasing-Selling Entity	Purchases or sells energy, capacity, and necessary reliability-related services as required.
☐	Market Operator	Interface point for reliability functions with commercial functions.
☐	Load-Serving Entity	Secures energy and transmission service (and reliability-related services) to serve the End-use Customer.

Reliability and Market Interface Principles

Applicable Reliability Principles *(Check box for all that apply.)*	
☒	1. Interconnected bulk electric systems shall be planned and operated in a coordinated manner to perform reliably under normal and abnormal conditions as defined in the NERC Standards.
☒	2. The frequency and voltage of interconnected bulk electric systems shall be controlled within defined limits through the balancing of real and reactive power supply and demand.
☐	3. Information necessary for the planning and operation of interconnected bulk electric systems shall be made available to those entities responsible for planning and operating the systems reliably.
☐	4. Plans for emergency operation and system restoration of interconnected bulk electric systems shall be developed, coordinated, maintained and implemented.
☒	5. Facilities for communication, monitoring and control shall be provided, used and maintained for the reliability of interconnected bulk electric systems.
☐	6. Personnel responsible for planning and operating interconnected bulk electric systems shall be trained, qualified, and have the responsibility and authority to implement actions.
☒	7. The security of the interconnected bulk electric systems shall be assessed, monitored and maintained on a wide area basis.
☐	8. Bulk power systems shall be protected from malicious physical or cyber attacks.

Does the proposed Standard comply with all the following Market Interface Principles? *(Select "yes" or "no" from the drop-down box.)*
1. The planning and operation of bulk electric systems shall recognize that reliability is an essential requirement of a robust North American economy. Yes
2. An Organization Standard shall not give any market participant an unfair competitive advantage.Yes
3. An Organization Standard shall neither mandate nor prohibit any specific market structure. Yes
4. An Organization Standard shall not preclude market solutions to achieving compliance with that Standard. Yes
5. An Organization Standard shall not require the public disclosure of commercially sensitive information. All market participants shall have equal opportunity to access commercially non-sensitive information that is required for compliance with reliability standards. Yes

Related Standards

Standard No.	Explanation

Related SARs

SAR ID	Explanation

Regional Differences

Region	Explanation
ERCOT	None
FRCC	None
MRO	None
NPCC	None
SERC	None
RFC	None
SPP	None
WECC	None

SPCTF Roster

Charles W. Rogers
Chairman / RFC-ECAR Representative
Principal Engineer
Consumers Energy Co.

W. Mark Carpenter
Vice Chairman / ERCOT Representative
System Protection Manager
TXU Electric Delivery

John Mulhausen
FRCC Representative
Manager, Design and Standards
Florida Power & Light Co.

Joseph M. Burdis
ISO/RTO Representative
Senior Consultant / Engineer, Transmission
and Interconnection Planning
PJM Interconnection, L.L.C.

William J. Miller
RFC-MAIN Representative
Consulting Engineer
Exelon Corporation

Deven Bhan
MRO Representative
Electrical Engineer, System Protection
Western Area Power Administration

Philip Tatro
NPCC Representative
Consulting Engineer
National Grid USA

Philip B. Winston
SERC Representative
Manager, Protection and Control
Georgia Power Company

Dean Sikes
SPP Representative
Manager - Transmission Protection, Apparatus, & Metering
Cleco Power

David Angell
WECC Representative
T&D Planning Engineering Leader
Idaho Power Company

W. O. (Bill) Kennedy
Canada Member-at-Large
Principal
b7kennedy & Associates Inc.

John L. Ciufo
Canada Member-at-Large
Manager Reliability Standards (P&C/Telecom)
Hydro One, Inc.

Jim Ingleson
ISO/RTO Representative
Senior Electric System Planning Engineer
New York Independent System Operator

Evan T. Sage
Investor Owned Utility
Senior Engineer
Potomac Electric Power Company

James D. Roberts
Federal
Transmission Planning
Tennessee Valley Authority

Tom Wiedman
NERC Consultant
Wiedman Power System Consulting Ltd.

Henry (Hank) Miller
RFC-ECAR Alternate
Principal Electrical Engineer
American Electric Power

Baj Agrawal
WECC Alternate
Principal Engineer
Arizona Public Service Company

Michael J. McDonald
Senior Principal Engineer, System Protection
Ameren Services Company

Jonathan Sykes
Senior Principal Engineer, System Protection
Salt River Project

Fred Ipock
Senior Engineer - Substations & Protection
City Utilities of Springfield, Missouri

W. O. (Bill) Kennedy
Canada Member-at-Large
Principal
b7kennedy & Associates Inc.

Bob Stuart
Director of Business Development, Principal
T&D Consultant
Elequant, Inc.

NERC
NORTH AMERICAN ELECTRIC
RELIABILITY COUNCIL

NERC SPCTF Assessment of Standards:

- **PRC-005-1 — Transmission and Generation Protection System Maintenance and Testing**
- **PRC-008-0 — Underfrequency Load Shedding Equipment Maintenance Programs**
- **PRC-011-0 — UVLS System Maintenance and Testing**
- **PRC-017-0 — Special Protection System Maintenance and Testing**

DRAFT 1.0
March 8, 2007

A Technical Review of Standards

Prepared by the

System Protection and Controls Task Force

of the

NERC Planning Committee

Table of Contents

Introduction **2**

Executive Summary **2**

Assessment of PRC-005-1 ..... **3**

Purpose *3*

General Comments *3*

Applicability *4*

Requirements *4*

R1 4

R2 5

FERC Assessment of PRC-005-1, PRC-008-0, PRC-011-0, and PRC-017-0 ..... **5**

PRC-005-1 ..... *5*

PRC-008-0 ..... *6*

PRC-011-0 ..... *6*

PRC-017-0 ..... *7*

Other Activities Related to PRC-005-1, PRC-008-0, PRC-011-0, and PRC-017-0 ..... **7**

Conclusions and Recommendations **7**

Appendix A — System Protection and Control Task Force ..... Error! Bookmark not defined.

This report and its attendant Standards Authorization Request were approved by the Planning Committee on March 21, 2007, for forwarding to the Standards Committee.

Introduction

When the original scope for the System Protection and Control Task Force was developed, one of the assigned items was to review all of the existing PRC-series Reliability Standards, to advise the Planning Committee of our assessment, and to develop Standards Authorization Requests, as appropriate, to address any perceived deficiencies.

This report presents the SPCTF's assessment of PRC-005-1 – Transmission and Generation Protection System Maintenance and Testing. The report includes the SPCTF's understanding of the intent of this standard and contains specific observations relative to the existing standard.

The SPCTF sees the parallel intent for each of the PRC-005, PRC-008, PRC-011, and PRC-017 as being maintenance and testing standards for different protective systems. In fact, PRC-005 & PRC-008, and PRC-011 & PRC-017 have very similar format respectively. Since all protective relay systems require some means of maintenance and testing, it would seem that all protective system maintenance and testing could be included in one standard regardless of scheme type. The SPCTF recommends that these four standards be reduced to one standard covering the issues detailed for PRC-005 on maintenance and testing.

These four standards were developed primarily by translating the requirements of an earlier Phase I Planning Standard; thus they have not been previously subjected to a critical review of the Requirements.

Executive Summary

Reliability standards PRC-005, 008, 011, and 017 are intended to assure that Transmission & Generation Protection Systems are maintained and tested so as to provide reliable performance when responding to abnormal system conditions. It is the responsibility of the Transmission Owner, Generation Owner, and Distribution Provider to ensure the Transmission & Generation Protection Systems are maintained and tested in such a manner that the protective systems operate to fulfill their function.

Only PRC-005 will be commented on in detail although the other three standards have the same concerns.

SPCTF concluded that:

- Applicable to all four standards — The listed requirements do not provide clear and sufficient guidance concerning the maintenance and testing of the Protection Systems to achieve the commonly stated purpose which is "To ensure all transmission and generation Protection Systems affecting the reliability of the Bulk Electric System (BES) are maintained and tested."
- Applicable to PRC-017 — Part of the stated purpose in PRC-017 states: "To ensure that maintenance and testing programs are developed and misoperations are analyzed and corrected." The phrase "and misoperations are analyzed and corrected" is not clearly appropriate in a maintenance and testing standard. That is, the purpose is more appropriate in PRC-003 and PRC-004, which relate to the analysis and mitigation of protection system misoperations. Analysis of correct operations or misoperations may be an integral part of condition-based maintenance processes, but need not be mandated in a maintenance standard.
- Applicable to all four standards — The standards should clearly state which power system elements are being addressed.
- Applicable to all four standards — The requirements should reflect the inherent differences between different technologies of protection systems.
- Applicable to all four standards — The terms maintenance programs and testing programs should be clearly defined in the glossary. The terms "maintenance" and "testing" are not interchangeable, and the requirements must be clear in their application. Additional terms may also have to be added to the glossary for clarity.

- Applicable to all four standards — The requirements of the existing standards, as stated, support time-based maintenance and testing, and should be expanded to include condition-based and performance-based maintenance and testing. The R1.2 summary of maintenance and testing procedures needs to have some minimum defined sub-requirements to insure that the stated intent of the standards is met to support review by the compliance monitor.

Assessment of PRC-005-1

Purpose

To ensure all transmission and generation Protection Systems affecting the reliability of the Bulk Electric System (BES) are maintained and tested.

A review of PRC-005 indicates that this standard is intended to assure that all affected entities have adequate maintenance and testing programs for their Protection Systems to ensure reliability. SPCTF agrees with the Purpose statement of PRC-005-1.

General Comments

The SPCTF offers the following general comments:

- None of the requirements within PRC-005-1 specifically indicate what minimum attributes should be included in protective system maintenance and testing procedures.
- For interval-based procedures, no allowable maximum interval is prescribed.
- None of the requirements in the existing PRC-005-1 reflect condition-based or performance-based maintenance and testing criteria.

Standard PRC-005 should clarify that two goals are being covered:

- The maintenance portion should have requirements that keep the protection system equipment operating within manufacturers' design specification throughout the service life.
- The testing portion should have requirements that verify that the functional performance of the protection systems is consistent with the design intent throughout the service life.

Applicability

Applicability 4.3 suggests that the definition of a Protection System in the Glossary of Terms should

> **4.1.** Transmission Owners
>
> **4.2.** Generation Owners
>
> **4.3.** Distribution Providers that owns a transmission Protection System

clarify how a Distribution Provider may be the owner of a transmission Protection System.

Requirements

R1

> **R1.** Each Transmission Owner and any Distribution Provider that owns a transmission Protection System and each Generator Owner that owns a generation Protection System shall have a Protection System maintenance and testing program for Protection Systems that affect the reliability of the BES. The program shall include:
>
> **R1.1.** Maintenance and testing intervals and their basis.
>
> **R1.2.** Summary of maintenance and testing procedures.

The following clarifications should be made to Requirement R1:

1. How is the phrase "that affect the reliability of the BES" to be interpreted? The standard should clearly specify which Protection Systems are subject to the requirements.
2. The standard should clearly specify which components of the Generation Protection System are subject to the requirements.

The following clarifications should be made to Subparts R1.1 & R1.2:

1. Interval-based, condition-based, or performance-based maintenance and testing minimum criteria should be established within R1.1, including, but not limited to the following:
    a. For time-based maintenance and testing programs, maximum maintenance intervals should be specified.
    b. For condition-based or performance-based maintenance and testing programs, the program should have sufficient justification and documentation.
2. Definitions should be established for the terms "maintenance programs" and "testing programs."
3. A minimum set of attributes to be included in maintenance and testing programs should be established within R1.2.

R2

R2. Each Transmission Owner and any Distribution Provider that owns a transmission Protection System and each Generator Owner that owns a generation Protection System shall provide documentation of its Protection System maintenance and testing program and the implementation of that program to its Regional Reliability Organization on request (within 30 calendar days). The documentation of the program implementation shall include:

R2.1. Evidence Protection System devices were maintained and tested within the defined intervals.

R2.2. Date each Protection System device was last tested/maintained

The following clarification should be made to requirement R2:

- The appropriate entity should have their Protection System maintenance program and testing program and associated documentation, including maintenance records and testing records, available to its Regional Reliability Organization and NERC during audits or upon request within 30 days.

FERC Assessment of PRC-005-1, PRC-008-0, PRC-011-0, and PRC-017-0

In the October 20, 2006 Notice of Proposed Rulemaking for adoption of NERC Standards (Docket Number RM06-16-000), the Federal Energy Regulatory Commission commented on these four standards and proposed changes. The observations and proposals are excerpted from the NOPR and included below.

PRC-005-1

The Commission proposes to approve PRC-005-1 as mandatory and enforceable. In addition, we propose to direct that NERC develop modifications to the Reliability Standard as discussed below.

Proposed Reliability Standard PRC-005-1 does not specify the criteria to determine the appropriate maintenance intervals, nor do it specify maximum allowable maintenance intervals for the protections systems. The Commission therefore proposes that NERC include a requirement that maintenance and testing of these protection systems must be carried out within a maximum allowable interval that is appropriate to the type of the protection system and its impact on the reliability of the Bulk-Power System.

Accordingly, giving due weight to the technical expertise of the ERO and with the expectation that the Reliability Standard will accomplish the purpose represented to the Commission by the ERO and that it will improve the reliability of the nation's Bulk-Power System, the Commission proposes to approve Reliability Standard PRC-005-1 as mandatory and enforceable. In addition, pursuant to section 215(d)(5) of the FPA and § 39.5(f) of our regulations, the Commission proposes to direct that NERC submit a modification to PRC-005-1 that includes a requirement that maintenance and testing of a protection system must be carried out within a maximum allowable interval that is appropriate to the type of the protection system and its impact on the reliability of the Bulk-Power System.

PRC-008-0

The Commission notes that the commenters generally share staff's concern that the proposed Reliability Standard does not specify the criteria to determine the appropriate maintenance intervals, nor does it specify maximum allowable maintenance intervals for the protection systems. The Commission agrees and proposes to require NERC to modify the proposed Reliability Standard to include a requirement that maintenance and testing of UFLS programs must be carried out within a maximum allowable interval that is appropriate to the type of relay used and the impact on the reliability of the Bulk-Power System.

Accordingly, the Commission proposes to approve Reliability Standard PRC-008-0 as mandatory and enforceable. In addition, the Commission proposes to direct that NERC submit a modification to PRC-008-0 that includes a requirement that maintenance and testing of UFLS programs must be carried out within a maximum allowable interval appropriate to the relay type and the potential impact on the Bulk-Power System.

PRC-011-0

PRC-011-0 does not specify the criteria to determine the appropriate maintenance intervals, nor does it specify maximum allowable maintenance intervals for the protections systems. The Commission proposes that NERC include a Requirement that maintenance and testing of these UFLS programs must be carried out within a maximum allowable interval that is appropriate to the type of the relay used and the impact of these UFLS on the reliability of the Bulk-Power System.

The Commission believes that Reliability Standard PRC-011-0 serves an important purpose in requiring transmission owners and distribution providers to implement their UVLS equipment maintenance and testing programs. Further, the proposed Requirements are sufficiently clear and objective to provide guidance for compliance.

Accordingly, giving due weight to the technical expertise of the ERO and with the expectation that the Reliability Standard will accomplish the purpose represented to the Commission by the ERO and that it will improve the reliability of the nation's Bulk-Power System, the Commission proposes to approve Reliability Standard PRC-011-0 as mandatory and enforceable. In addition, pursuant to section 215(d)(5) of the FPA and § 39.5(f) of our regulations, the Commission proposes to direct that NERC submit a modification to PRC-011-0 that includes a requirement that maintenance and testing of UVLS programs must be carried out within a maximum allowable interval appropriate to the applicable relay and the impact on the reliability of the Bulk-Power System.

PRC-017-0

PRC-017-0 does not specify the criteria to determine the appropriate maintenance intervals, nor does it specify maximum allowable maintenance intervals for the protections systems. The Commission proposes to require NERC to include a requirement that maintenance and testing of these special protection system programs must be carried out within a maximum allowable interval that is appropriate to the type of relaying used and the impact of these special protection system programs on the reliability of the Bulk-Power System.

Accordingly, giving due weight to the technical expertise of the ERO and with the expectation that the Reliability Standard will accomplish the purpose represented to the Commission by the ERO and that it will improve the reliability of the nation's Bulk-Power System, the Commission proposes to approve Reliability Standard PRC-017-0 as mandatory and enforceable. In addition, pursuant to section 215(d)(5) of the FPA and § 39.5(f) of our regulations, the Commission proposes to direct that NERC submit a modification to PRC-017-0 that: (1) includes a requirement that maintenance and testing of these special protection system programs must be carried out within a maximum allowable interval that is appropriate to the type of relaying used; and (2) identifies the impact of these special protection system programs on the reliability of the Bulk-Power System.

Other Activities Related to PRC-005-1, PRC-008-0, PRC-011-0, and PRC-017-0

These four Standards are contained in several projects and draft SARs as part of the "Draft Reliability Standards Development Plan: 2007–2009", which was approved by the NERC Board of Trustees.

The SPCTF recommends that standards PRC-005-1, PRC-008-0, PRC-011-0, and PRC-017-0 be removed from the separate SARS in the Standards Development Plan, and that they be included in a new Standard Authorization Request for a single Protection System maintenance and testing standard.

Conclusions and Recommendations

PRC-005-1, PRC-008-0, PRC-011-0, and PRC-017-0 require additions, clarifications, and definitions to insure that the Protection Systems are properly maintained and tested.

The SPCTF recommends that standards PRC-005-1, PRC-008-0, PRC-011-0, and PRC-017-0 be removed from the separate SARS in the "Draft Reliability Standards Development Plan: 2007–2009," and that they be included in a new Standard Authorization Request for a single Protection System maintenance and testing standard.

SPCTF submits the attached SAR for that purpose of consolidating PRC-005-1, PRC-008-0, PRC-011-0, and PRC-017-0 into a single standard to the Planning Committee for endorsement.

Standard Review Guidelines

Applicability
Does this reliability standard clearly identify the functional classes of entities responsible for complying with the reliability standard, with any specific additions or exceptions noted? Where multiple functional classes are identified is there a clear line of responsibility for each requirement identifying the functional class and entity to be held accountable for compliance? Does the requirement allow overlapping responsibilities between Registered Entities possibly creating confusion for who is ultimately accountable for compliance?

Does this reliability standard identify the geographic applicability of the standard, such as the entire North American bulk power system, an interconnection, or within a regional entity area? If no geographic limitations are identified, the default is that the standard applies throughout North America.

Does this reliability standard identify any limitations on the applicability of the standard based on electric facility characteristics, such as generators with a nameplate rating of 20 MW or greater, or transmission facilities energized at 200 kV or greater or some other criteria? If no functional entity limitations are identified, the default is that the standard applies to all identified functional entities.

Purpose
Does this reliability standard have a clear statement of purpose that describes how the standard contributes to the reliability of the bulk power system? Each purpose statement should include a value statement.

Performance Requirements
Does this reliability standard state one or more performance requirements, which if achieved by the applicable entities, will provide for a reliable bulk power system, consistent with good utility practices and the public interest?

Does each requirement identify who shall do what under what conditions and to what outcome?

Measurability
Is each performance requirement stated so as to be objectively measurable by a third party with knowledge or expertise in the area addressed by that requirement?

Does each performance requirement have one or more associated measures used to objectively evaluate compliance with the requirement?

If performance results can be practically measured quantitatively, are metrics provided within the requirement to indicate satisfactory performance?

Technical Basis in Engineering and Operations
Is this reliability standard based upon sound engineering and operating judgment, analysis, or experience, as determined by expert practitioners in that particular field?

Completeness
Is this reliability standard complete and self-contained? Does the standard depend on external information to determine the required level of performance?

Consequences for Noncompliance
In combination with guidelines for penalties and sanctions, as well as other ERO and regional entity compliance documents, are the consequences of violating a standard clearly known to the responsible entities?

Clear Language
Is the reliability standard stated using clear and unambiguous language? Can responsible entities, using reasonable judgment and in keeping with good utility practices, arrive at a consistent interpretation of the required performance?

Practicality
Does this reliability standard establish requirements that can be practically implemented by the assigned responsible entities within the specified effective date and thereafter?

Capability Requirements versus Performance Requirements
In general, requirements for entities to have 'capabilities' (this would include facilities for communication, agreements with other entities, etc.) should be located in the standards for certification. The certification requirements should indicate that entities have a responsibility to 'maintain' their capabilities.

Consistent Terminology
To the extent possible, does this reliability standard use a set of standard terms and definitions that are approved through the NERC reliability standards development process?

If the standard uses terms that are included in the NERC Glossary of Terms Used in Reliability Standards, then the term must be capitalized when it is used in the standard. New terms should not be added unless they have a 'unique' definition when used in a NERC reliability standard. Common terms that could be found in a college dictionary should not be defined and added to the NERC Glossary.

Are the verbs on the 'verb list' from the DT Guidelines? If not – do new verbs need to be added to the guidelines or could you use one of the verbs from the verb list?

Violation Risk Factors (Risk Factor)

High Risk Requirement

A requirement that, if violated, could directly cause or contribute to bulk electric system instability, separation, or a cascading sequence of failures, or could place the bulk electric system at an unacceptable risk of instability, separation, or cascading failures;

or a requirement in a planning time frame that, if violated, could, under emergency, abnormal, or restorative conditions anticipated by the preparations, directly cause or contribute to bulk electric system instability, separation, or a cascading sequence of failures, or could place the bulk electric system at an unacceptable risk of instability, separation, or cascading failures, or could hinder restoration to a normal condition.

Medium Risk Requirement

A requirement that, if violated, could directly affect the electrical state or the capability of the bulk electric system, or the ability to effectively monitor and control the bulk electric system. However, violation of a medium risk requirement is unlikely to lead to bulk electric system instability, separation, or cascading failures;

or a requirement in a planning time frame that, if violated, could, under emergency, abnormal, or restorative conditions anticipated by the preparations, directly and adversely affect the electrical state or capability of the bulk electric system, or the ability to effectively monitor, control, or restore the bulk electric system. However, violation of a medium risk requirement is unlikely, under emergency, abnormal, or restoration conditions anticipated by the preparations, to lead to bulk electric system instability, separation, or cascading failures, nor to hinder restoration to a normal condition.

Lower Risk Requirement

A requirement that, if violated, would not be expected to adversely affect the electrical state or capability of the bulk electric system, or the ability to effectively monitor and control the bulk electric system. A requirement that is administrative in nature;

or a requirement in a planning time frame that, if violated, would not, under the emergency, abnormal, or restorative conditions anticipated by the preparations, be expected to adversely affect the electrical state or capability of the bulk electric system, or the ability to effectively monitor, control, or restore the bulk electric system. A planning requirement that is administrative in nature.

Time Horizon

The drafting team should also indicate the time horizon available for mitigating a violation to the requirement using the following definitions:

- **Long-term Planning** — a planning horizon of one year or longer.
- **Operations Planning** — operating and resource plans from day-ahead up to and including seasonal.
- **Same-day Operations** — routine actions required within the timeframe of a day, but not real-time.
- **Real-time Operations** — actions required within one hour or less to preserve the reliability of the bulk electric system.
- **Operations Assessment** — follow-up evaluations and reporting of real time operations.

Violation Severity Levels

The drafting team should indicate a set of violation severity levels that can be applied for the requirements within a standard. ('Violation severity levels' replace existing 'levels of non-compliance.') The violation severity levels must be applied for each requirement and may be combined to cover multiple requirements, as long as it is clear which requirements are included and that all requirements are included.

The violation severity levels should be based on the following definitions:

- **Lower: mostly compliant with minor exceptions** — The responsible entity is mostly compliant with and meets the intent of the requirement but is deficient with respect to one or more minor details. Equivalent score: more than 95% but less than 100% compliant.
- **Moderate: mostly compliant with significant exceptions** — The responsible entity is mostly compliant with and meets the intent of the requirement but is deficient with respect to one or more significant elements. Equivalent score: more than 85% but less than or equal to 95% compliant.
- **High: marginal performance or results** — The responsible entity has only partially achieved the reliability objective of the requirement and is missing one or more significant elements. Equivalent score: more than 70% but less than or equal to 85% compliant.
- **Severe: poor performance or results** — The responsible entity has failed to meet the reliability objective of the requirement. Equivalent score: 70% or less compliant.

Compliance Monitor

Replace, 'Regional Reliability Organization' with 'Regional Entity'

Fill-in-the-blank Requirements

Do not include any 'fill-in-the-blank' requirements. These are requirements that assign one entity responsibility for developing some performance measures without requiring that the performance measures be included in the body of a standard – then require another entity to comply with those requirements.

Every reliability objective can be met, at least at a threshold level, by a North American standard. If we need regions to develop regional standards, such as in under-frequency load shedding, we can always write a uniform North American standard for the applicable functional entities as a means of encouraging development of the regional standards.

Requirements for Regional Reliability Organization

Do not write any requirements for the Regional Reliability Organization. Any requirements currently assigned to the RRO should be re-assigned to the applicable functional entity.

Effective Dates

Must be 1st day of 1st quarter after entities are expected to be compliant – must include time to provide notice to responsible entities of the obligation to comply. If the standard is to be actively monitored, time for the Compliance Monitoring and Enforcement Program to develop reporting instructions and modify the Compliance Data Management System(s) both at NERC and Regional Entities must be provided in the implementation plan. The effective date should be linked to the NERC BOT adoption date.

Associated Documents

If there are standards that are referenced within a standard, list the full name and number of the standard under the section called, 'Associated Documents'.

Functional Model Version 3

Review the requirements against the latest descriptions of the responsibilities and tasks assigned to functional entities as provided in pages 13 through 53 of the draft Functional Model Version 3.

PRC-005-0 — Transmission Protection System Maintenance and Testing

Version 0 Comments:

- This section should not move forward in Version 0. More procedure/data oriented, not really stand alone "standard" material but more tools or reference material for executing a standard
- R3-1.a – should breakers and switches be included in the list?
- M3-2 – what kind of evidence?
- M3-2 The "shall have evidence" phrase is vague and may be unnecessary considering that the requesting entity should know if its requested information is supplied.

Phase III & IV Comments:

- PRC 003 to 005 only address generator (and transmission) protective systems, without defining this term.
- Need to add language to ensure the Regional Requirements focus on the most impactive scenarios
- Modify applicability to clarfify that the requirements are applicable to the following:
- All protection systems on the bulk electric system.
- All generation protection systems whose misoperations impact the bulk electric system
- There is no performance requirement or measure of effectiveness of a maintenance program required by the standard

PRC-008-0 — Underfrequency Load Shedding Equipment Maintenance Programs

Version 0 Comments:

- The language for protection system maintenance and testing programs should be consistent from standard to standard. The requirement in this standard should match Standard 063, Requirement R3-1. This will provide a consistent reporting requirement for all protection system.
- From standard 063.3: The Transmission Owner, Generator Owner and Distribution Provider that owns a transmission protection system shall have a transmission protection system maintenance and testing program in place. The program(s) shall include:
- From Standard 067.3: The Transmission Owner and Distribution Provider with a UFLS program (as required by its Regional Reliability Organization) shall have a UFLS equipment maintenance and testing program in place. This UFLS equipment maintenance and testing program shall include UFLS equipment identification, the schedule for UFLS equipment testing, and the schedule for UFLS equipment maintenance.
- The "shall have evidence" phrase is vague and may be unnecessary considering that the requesting entity should know if its requested information is supplied.

PRC-011-0 — UVLS System Maintenance and Testing

Version 0 Comments:

- The "shall have evidence" phrase is vague and may be unnecessary considering that the requesting entity should know if its requested information is supplied.
- UVLS : Under voltage load shedding should not be a requirement for all parties. Those who have shunt reactors can meet the objective by not shedding load but by shedding shunt reactors. Flexibility in achieving the desired goal is appropriate.

PRC-017-0 — Special Protection System Maintenance and Testing

Version 0 Comments:

- In f, it needs to be changed to require that the last two dates of testing and maintenance are kept. This is necessary to verify an action that is required bi-annually or bi-monthly.
- The "shall have evidence" phrase is vague and may be unnecessary considering that the requesting entity should know if its requested information is supplied.

Standard Authorization Request Form

Title of Proposed Standard: ~~Transmission and Generation Protection System Maintenance and Testing~~Protection System Maintenance (Project 2007-17)
Request Date: May 7, 2007

SAR Requestor Information	**SAR Type** (*Check a box for each one that applies.*)	
Name: System Protection and Controls Task Force (Attachment A)	☐	New Standard
Primary Contact: Charles Rogers	X	Revision to existing Standards: PRC-005-1 — Transmission and Generation Protection System Maintenance and Testing PRC-008-0 — Underfrequency Load Shedding Equipment Maintenance Programs PRC-011-0 — UVLS System Maintenance and Testing PRC-017-0 — Special Protection System Maintenance and Testing
Telephone (517) 788-0027 Fax (517) 788-0917	X	Withdrawal of existing Standard
E-mail: cwrogers@cmsenergy.com	☐	Urgent Action

Purpose (Describe the purpose of the standard — what the standard will achieve in support of reliability.)

The purpose of standard PRC-005 should remain "To ensure all transmission and generation Protection Systems affecting the reliability of the Bulk Electric System (BES) are maintained and tested."

Industry Need (Provide a detailed statement justifying the need for the proposed standard, along with any supporting documentation.)

In Order 693, the Federal Energy Regulatory Commission directed that changes be made to these standards.

These standards should be consolidated into a single standard to reduce the costs of compliance and a number of technical short comings in these standards should be corrected to provide reliable performance when responding to abnormal system conditions.

Brief Description (Describe the proposed standard in sufficient detail to clearly define the scope in a manner that can be easily understood by others.)

Revise PRC-005-1 — Transmission and Generation Protection System Maintenance and Testing, to consolidate PRC-005-1, PRC-008-0 — Underfrequency Load Shedding Equipment Maintenance Programs; PRC-011-0 — UVLS System Maintenance and Testing; and PRC-017-0 — Special Protection System Maintenance and Testing into a single maintenance and testing standard. Standards PRC-008-0, PRC-011-0, and PRC-017-0 would then be withdrawn.

The revised PRC-005 standard should address the issues raised in the FERC Order 693, the issues raised by stakeholders during the development of Version 0 and Phase III & IV standards (Attachment D), and the issues addressed in the SPCTF report "Assessment of PRC-005-1 – Transmission and Generation Protection System Maintenance and Testing; with implications for PRC-008-0, PRC-011-0, and PRC-017-0" (Attachment B) The revised standard should also address the comments submitted by stakeholders during the development of Version 0, and Phase III & IV and should reflect improvements identified in the Reliability Standards Review Guidelines. (Attachment C)

Detailed Description:

The PRC-005, 008, 011, and 017 reliability standards are intended to assure that ~~Transmission & Generation~~ Protection Systems are maintained and tested so as to provide reliable performance when responding to abnormal system conditions. It is the responsibility of the Transmission Owner, ~~Generation~~ Generator Owner, and Distribution Provider to ensure the ~~Transmission & Generation~~ Protection Systems are maintained and tested in such a manner that the protective systems operate to fulfill their function.

Applicable to all four standards — The listed requirements do not provide clear and sufficient guidance concerning the maintenance and testing of the Protection Systems to achieve the commonly stated purpose which is "To ensure all transmission and generation Protection Systems affecting the reliability of the Bulk Electric System (BES) are maintained and tested."

- Applicable to PRC-017 — Part of the stated purpose in PRC-017 is: "To ensure that maintenance and testing programs are developed and misoperations are analyzed and corrected." The phrase "and misoperations are analyzed and corrected" is not clearly appropriate in a maintenance and testing standard. That is the purpose is more appropriate in PRC-003 and PRC-004, which relate to the analysis and mitigation of protection system misoperations. Analysis of correct operations or misoperations may be an integral part of condition-based maintenance processes, but need not be mandated in a maintenance standard.
- Applicable to all four standards — The standards should clearly state which power system elements are being addressed.
- Applicable to all four standards — The requirements should reflect the inherent differences between various protection system technologies.
- Applicable to all four standards — The terms "maintenance programs" and "testing programs" should be clearly defined in the glossary. The terms "maintenance" and "testing" are not interchangeable, and the requirements must be clear in their application. Additional terms may also have to be added to the glossary for clarity.
- Applicable to all four standards — The requirements of the existing standards, as stated, support time-based maintenance and testing, and should be expanded to include condition-based and performance-based maintenance and testing. The requirements for maintenance and testing procedures need to have more specificity to insure that the stated intent of the standards is met to support review by the compliance monitor.

The revised standard should also include the general improvements identified in the attached Reliability Standard Review Guidelines (Attachment C) and should address the comments submitted by stakeholders (Attachment D).

Reliability Functions

The Standard will Apply to the Following Functions *(Check box for each one that applies.)*		
☐	Reliability Coordinator	Responsible for the real-time operating reliability of its Reliability Coordinator Area in coordination with its neighboring Reliability Coordinator's wide area view.
☐	Balancing Authority	Integrates resource plans ahead of time, and maintains load-interchange-resource balance within a Balancing Authority Area and supports Interconnection frequency in real time.
☐	Interchange Authority	Ensures communication of interchange transactions for reliability evaluation purposes and coordinates implementation of valid and balanced interchange schedules between Balancing Authority Areas.
☐	Planning Coordinator	Assesses the longer-term reliability of its Planning Coordinator Area.
☐	Resource Planner	Develops a >one year plan for the resource adequacy of its specific loads within a Planning Coordinator area.
☐	Transmission Planner	Develops a >one year plan for the reliability of the interconnected Bulk Electric System within its portion of the Planning Coordinator area.
☐	Transmission Service Provider	Administers the transmission tariff and provides transmission services under applicable transmission service agreements (e.g., the pro forma tariff).
☒	Transmission Owner	Owns and maintains transmission facilities.
☐	Transmission Operator	Ensures the real-time operating reliability of the transmission assets within a Transmission Operator Area.
☒	Distribution Provider	Delivers electrical energy to the End-use customer.
☒	Generator Owner	Owns and maintains generation facilities.
☐	Generator Operator	Operates generation unit(s) to provide real and reactive power.
☐	Purchasing-Selling Entity	Purchases or sells energy, capacity, and necessary reliability-related services as required.
☐	Market Operator	Interface point for reliability functions with commercial functions.
☐	Load-Serving Entity	Secures energy and transmission service (and reliability-related services) to serve the End-use Customer.

Reliability and Market Interface Principles

Applicable Reliability Principles *(Check box for all that apply.)*	
☒	1. Interconnected bulk electric systems shall be planned and operated in a coordinated manner to perform reliably under normal and abnormal conditions as defined in the NERC Standards.
☒	2. The frequency and voltage of interconnected bulk electric systems shall be controlled within defined limits through the balancing of real and reactive power supply and demand.
☐	3. Information necessary for the planning and operation of interconnected bulk electric systems shall be made available to those entities responsible for planning and operating the systems reliably.
☐ ~~☒~~	4. Plans for emergency operation and system restoration of interconnected bulk electric systems shall be developed, coordinated, maintained and implemented.
☒	5. Facilities for communication, monitoring and control shall be provided, used and maintained for the reliability of interconnected bulk electric systems.
☐	6. Personnel responsible for planning and operating interconnected bulk electric systems shall be trained, qualified, and have the responsibility and authority to implement actions.
☒	7. The security of the interconnected bulk electric systems shall be assessed, monitored and maintained on a wide area basis.
☐	8. Bulk power systems shall be protected from malicious physical or cyber attacks.

Does the proposed Standard comply with all the following Market Interface Principles? *(Select "yes" or "no" from the drop-down box.)*
1. The planning and operation of bulk electric systems shall recognize that reliability is an essential requirement of a robust North American economy. Yes
2. An Organization Standard shall not give any market participant an unfair competitive advantage.Yes
3. An Organization Standard shall neither mandate nor prohibit any specific market structure. Yes
4. An Organization Standard shall not preclude market solutions to achieving compliance with that Standard. Yes
5. An Organization Standard shall not require the public disclosure of commercially sensitive information. All market participants shall have equal opportunity to access commercially non-sensitive information that is required for compliance with reliability standards. Yes

Related Standards

Standard No.	Explanation

Related SARs

SAR ID	Explanation

Regional Differences

Region	Explanation
ERCOT	None
FRCC	None
MRO	None
NPCC	None
SERC	None
RFC	None
SPP	None
WECC	None

SPCTF Roster

Charles W. Rogers
Chairman / RFC-ECAR Representative
Principal Engineer
Consumers Energy Co.

W. Mark Carpenter
Vice Chairman / ERCOT Representative
System Protection Manager
TXU Electric Delivery

John Mulhausen
FRCC Representative
Manager, Design and Standards
Florida Power & Light Co.

Joseph M. Burdis
ISO/RTO Representative
Senior Consultant / Engineer, Transmission
and Interconnection Planning
PJM Interconnection, L.L.C.

William J. Miller
RFC-MAIN Representative
Consulting Engineer
Exelon Corporation

Deven Bhan
MRO Representative
Electrical Engineer, System Protection
Western Area Power Administration

Philip Tatro
NPCC Representative
Consulting Engineer
National Grid USA

Philip B. Winston
SERC Representative
Manager, Protection and Control
Georgia Power Company

Dean Sikes
SPP Representative
Manager - Transmission Protection, Apparatus, & Metering
Cleco Power

David Angell
WECC Representative
T&D Planning Engineering Leader
Idaho Power Company

W. O. (Bill) Kennedy
Canada Member-at-Large
Principal
b7kennedy & Associates Inc.

John L. Ciufo
Canada Member-at-Large
Manager Reliability Standards (P&C/Telecom)
Hydro One, Inc.

Jim Ingleson
ISO/RTO Representative
Senior Electric System Planning Engineer
New York Independent System Operator

Evan T. Sage
Investor Owned Utility
Senior Engineer
Potomac Electric Power Company

James D. Roberts
Federal
Transmission Planning
Tennessee Valley Authority

Tom Wiedman
NERC Consultant
Wiedman Power System Consulting Ltd.

Henry (Hank) Miller
RFC-ECAR Alternate
Principal Electrical Engineer
American Electric Power

Baj Agrawal
WECC Alternate
Principal Engineer
Arizona Public Service Company

Michael J. McDonald
Senior Principal Engineer, System Protection
Ameren Services Company

Jonathan Sykes
Senior Principal Engineer, System Protection
Salt River Project

Fred Ipock
Senior Engineer - Substations & Protection
City Utilities of Springfield, Missouri

W. O. (Bill) Kennedy
Canada Member-at-Large
Principal
b7kennedy & Associates Inc.

Bob Stuart
Director of Business Development, Principal
T&D Consultant
Elequant, Inc.

NERC
NORTH AMERICAN ELECTRIC
RELIABILITY COUNCIL

NERC SPCTF Assessment of Standards:

- **PRC-005-1 — Transmission and Generation Protection System Maintenance and Testing**
- **PRC-008-0 — Underfrequency Load Shedding Equipment Maintenance Programs**
- **PRC-011-0 — UVLS System Maintenance and Testing**
- **PRC-017-0 — Special Protection System Maintenance and Testing**

DRAFT 1.0
March 8, 2007

A Technical Review of Standards

Prepared by the

System Protection and Controls Task Force

of the

NERC Planning Committee

Table of Contents

Introduction **2**

Executive Summary **2**

Assessment of PRC-005-1 ..... **3**

Purpose *3*

General Comments *3*

Applicability *4*

Requirements *4*

R1 4

R2 5

FERC Assessment of PRC-005-1, PRC-008-0, PRC-011-0, and PRC-017-0 ..... **5**

PRC-005-1 ..... *5*

PRC-008-0 ..... *6*

PRC-011-0 ..... *6*

PRC-017-0 ..... *7*

Other Activities Related to PRC-005-1, PRC-008-0, PRC-011-0, and PRC-017-0 ..... **7**

Conclusions and Recommendations **7**

Appendix A — System Protection and Control Task Force ..... Error! Bookmark not defined.

This report and its attendant Standards Authorization Request were approved by the Planning Committee on March 21, 2007, for forwarding to the Standards Committee.

Introduction

When the original scope for the System Protection and Control Task Force was developed, one of the assigned items was to review all of the existing PRC-series Reliability Standards, to advise the Planning Committee of our assessment, and to develop Standards Authorization Requests, as appropriate, to address any perceived deficiencies.

This report presents the SPCTF's assessment of PRC-005-1 – Transmission and Generation Protection System Maintenance and Testing. The report includes the SPCTF's understanding of the intent of this standard and contains specific observations relative to the existing standard.

The SPCTF sees the parallel intent for each of the PRC-005, PRC-008, PRC-011, and PRC-017 as being maintenance and testing standards for different protective systems. In fact, PRC-005 & PRC-008, and PRC-011 & PRC-017 have very similar format respectively. Since all protective relay systems require some means of maintenance and testing, it would seem that all protective system maintenance and testing could be included in one standard regardless of scheme type. The SPCTF recommends that these four standards be reduced to one standard covering the issues detailed for PRC-005 on maintenance and testing.

These four standards were developed primarily by translating the requirements of an earlier Phase I Planning Standard; thus they have not been previously subjected to a critical review of the Requirements.

Executive Summary

Reliability standards PRC-005, 008, 011, and 017 are intended to assure that Transmission & Generation Protection Systems are maintained and tested so as to provide reliable performance when responding to abnormal system conditions. It is the responsibility of the Transmission Owner, Generation Owner, and Distribution Provider to ensure the Transmission & Generation Protection Systems are maintained and tested in such a manner that the protective systems operate to fulfill their function.

Only PRC-005 will be commented on in detail although the other three standards have the same concerns.

SPCTF concluded that:

- Applicable to all four standards — The listed requirements do not provide clear and sufficient guidance concerning the maintenance and testing of the Protection Systems to achieve the commonly stated purpose which is "To ensure all transmission and generation Protection Systems affecting the reliability of the Bulk Electric System (BES) are maintained and tested."
- Applicable to PRC-017 — Part of the stated purpose in PRC-017 states: "To ensure that maintenance and testing programs are developed and misoperations are analyzed and corrected." The phrase "and misoperations are analyzed and corrected" is not clearly appropriate in a maintenance and testing standard. That is, the purpose is more appropriate in PRC-003 and PRC-004, which relate to the analysis and mitigation of protection system misoperations. Analysis of correct operations or misoperations may be an integral part of condition-based maintenance processes, but need not be mandated in a maintenance standard.
- Applicable to all four standards — The standards should clearly state which power system elements are being addressed.
- Applicable to all four standards — The requirements should reflect the inherent differences between different technologies of protection systems.
- Applicable to all four standards — The terms maintenance programs and testing programs should be clearly defined in the glossary. The terms "maintenance" and "testing" are not interchangeable, and the requirements must be clear in their application. Additional terms may also have to be added to the glossary for clarity.

- Applicable to all four standards — The requirements of the existing standards, as stated, support time-based maintenance and testing, and should be expanded to include condition-based and performance-based maintenance and testing. The R1.2 summary of maintenance and testing procedures needs to have some minimum defined sub-requirements to insure that the stated intent of the standards is met to support review by the compliance monitor.

Assessment of PRC-005-1

Purpose

To ensure all transmission and generation Protection Systems affecting the reliability of the Bulk Electric System (BES) are maintained and tested.

A review of PRC-005 indicates that this standard is intended to assure that all affected entities have adequate maintenance and testing programs for their Protection Systems to ensure reliability. SPCTF agrees with the Purpose statement of PRC-005-1.

General Comments

The SPCTF offers the following general comments:

- None of the requirements within PRC-005-1 specifically indicate what minimum attributes should be included in protective system maintenance and testing procedures.
- For interval-based procedures, no allowable maximum interval is prescribed.
- None of the requirements in the existing PRC-005-1 reflect condition-based or performance-based maintenance and testing criteria.

Standard PRC-005 should clarify that two goals are being covered:

- The maintenance portion should have requirements that keep the protection system equipment operating within manufacturers' design specification throughout the service life.
- The testing portion should have requirements that verify that the functional performance of the protection systems is consistent with the design intent throughout the service life.

Applicability

Applicability 4.3 suggests that the definition of a Protection System in the Glossary of Terms should

> **4.1.** Transmission Owners
>
> **4.2.** Generation Owners
>
> **4.3.** Distribution Providers that owns a transmission Protection System

clarify how a Distribution Provider may be the owner of a transmission Protection System.

Requirements

R1

> **R1.** Each Transmission Owner and any Distribution Provider that owns a transmission Protection System and each Generator Owner that owns a generation Protection System shall have a Protection System maintenance and testing program for Protection Systems that affect the reliability of the BES. The program shall include:
>
> **R1.1.** Maintenance and testing intervals and their basis.
>
> **R1.2.** Summary of maintenance and testing procedures.

The following clarifications should be made to Requirement R1:

1. How is the phrase "that affect the reliability of the BES" to be interpreted? The standard should clearly specify which Protection Systems are subject to the requirements.
2. The standard should clearly specify which components of the Generation Protection System are subject to the requirements.

The following clarifications should be made to Subparts R1.1 & R1.2:

1. Interval-based, condition-based, or performance-based maintenance and testing minimum criteria should be established within R1.1, including, but not limited to the following:
    a. For time-based maintenance and testing programs, maximum maintenance intervals should be specified.
    b. For condition-based or performance-based maintenance and testing programs, the program should have sufficient justification and documentation.
2. Definitions should be established for the terms "maintenance programs" and "testing programs."
3. A minimum set of attributes to be included in maintenance and testing programs should be established within R1.2.

R2

R2. Each Transmission Owner and any Distribution Provider that owns a transmission Protection System and each Generator Owner that owns a generation Protection System shall provide documentation of its Protection System maintenance and testing program and the implementation of that program to its Regional Reliability Organization on request (within 30 calendar days). The documentation of the program implementation shall include:

R2.1. Evidence Protection System devices were maintained and tested within the defined intervals.

R2.2. Date each Protection System device was last tested/maintained

The following clarification should be made to requirement R2:

- The appropriate entity should have their Protection System maintenance program and testing program and associated documentation, including maintenance records and testing records, available to its Regional Reliability Organization and NERC during audits or upon request within 30 days.

FERC Assessment of PRC-005-1, PRC-008-0, PRC-011-0, and PRC-017-0

In the October 20, 2006 Notice of Proposed Rulemaking for adoption of NERC Standards (Docket Number RM06-16-000), the Federal Energy Regulatory Commission commented on these four standards and proposed changes. The observations and proposals are excerpted from the NOPR and included below.

PRC-005-1

The Commission proposes to approve PRC-005-1 as mandatory and enforceable. In addition, we propose to direct that NERC develop modifications to the Reliability Standard as discussed below.

Proposed Reliability Standard PRC-005-1 does not specify the criteria to determine the appropriate maintenance intervals, nor do it specify maximum allowable maintenance intervals for the protections systems. The Commission therefore proposes that NERC include a requirement that maintenance and testing of these protection systems must be carried out within a maximum allowable interval that is appropriate to the type of the protection system and its impact on the reliability of the Bulk-Power System.

Accordingly, giving due weight to the technical expertise of the ERO and with the expectation that the Reliability Standard will accomplish the purpose represented to the Commission by the ERO and that it will improve the reliability of the nation's Bulk-Power System, the Commission proposes to approve Reliability Standard PRC-005-1 as mandatory and enforceable. In addition, pursuant to section 215(d)(5) of the FPA and § 39.5(f) of our regulations, the Commission proposes to direct that NERC submit a modification to PRC-005-1 that includes a requirement that maintenance and testing of a protection system must be carried out within a maximum allowable interval that is appropriate to the type of the protection system and its impact on the reliability of the Bulk-Power System.

PRC-008-0

The Commission notes that the commenters generally share staff's concern that the proposed Reliability Standard does not specify the criteria to determine the appropriate maintenance intervals, nor does it specify maximum allowable maintenance intervals for the protection systems. The Commission agrees and proposes to require NERC to modify the proposed Reliability Standard to include a requirement that maintenance and testing of UFLS programs must be carried out within a maximum allowable interval that is appropriate to the type of relay used and the impact on the reliability of the Bulk-Power System.

Accordingly, the Commission proposes to approve Reliability Standard PRC-008-0 as mandatory and enforceable. In addition, the Commission proposes to direct that NERC submit a modification to PRC-008-0 that includes a requirement that maintenance and testing of UFLS programs must be carried out within a maximum allowable interval appropriate to the relay type and the potential impact on the Bulk-Power System.

PRC-011-0

PRC-011-0 does not specify the criteria to determine the appropriate maintenance intervals, nor does it specify maximum allowable maintenance intervals for the protections systems. The Commission proposes that NERC include a Requirement that maintenance and testing of these UFLS programs must be carried out within a maximum allowable interval that is appropriate to the type of the relay used and the impact of these UFLS on the reliability of the Bulk-Power System.

The Commission believes that Reliability Standard PRC-011-0 serves an important purpose in requiring transmission owners and distribution providers to implement their UVLS equipment maintenance and testing programs. Further, the proposed Requirements are sufficiently clear and objective to provide guidance for compliance.

Accordingly, giving due weight to the technical expertise of the ERO and with the expectation that the Reliability Standard will accomplish the purpose represented to the Commission by the ERO and that it will improve the reliability of the nation's Bulk-Power System, the Commission proposes to approve Reliability Standard PRC-011-0 as mandatory and enforceable. In addition, pursuant to section 215(d)(5) of the FPA and § 39.5(f) of our regulations, the Commission proposes to direct that NERC submit a modification to PRC-011-0 that includes a requirement that maintenance and testing of UVLS programs must be carried out within a maximum allowable interval appropriate to the applicable relay and the impact on the reliability of the Bulk-Power System.

PRC-017-0

PRC-017-0 does not specify the criteria to determine the appropriate maintenance intervals, nor does it specify maximum allowable maintenance intervals for the protections systems. The Commission proposes to require NERC to include a requirement that maintenance and testing of these special protection system programs must be carried out within a maximum allowable interval that is appropriate to the type of relaying used and the impact of these special protection system programs on the reliability of the Bulk-Power System.

Accordingly, giving due weight to the technical expertise of the ERO and with the expectation that the Reliability Standard will accomplish the purpose represented to the Commission by the ERO and that it will improve the reliability of the nation's Bulk-Power System, the Commission proposes to approve Reliability Standard PRC-017-0 as mandatory and enforceable. In addition, pursuant to section 215(d)(5) of the FPA and § 39.5(f) of our regulations, the Commission proposes to direct that NERC submit a modification to PRC-017-0 that: (1) includes a requirement that maintenance and testing of these special protection system programs must be carried out within a maximum allowable interval that is appropriate to the type of relaying used; and (2) identifies the impact of these special protection system programs on the reliability of the Bulk-Power System.

Other Activities Related to PRC-005-1, PRC-008-0, PRC-011-0, and PRC-017-0

These four Standards are contained in several projects and draft SARs as part of the "Draft Reliability Standards Development Plan: 2007–2009", which was approved by the NERC Board of Trustees.

The SPCTF recommends that standards PRC-005-1, PRC-008-0, PRC-011-0, and PRC-017-0 be removed from the separate SARS in the Standards Development Plan, and that they be included in a new Standard Authorization Request for a single Protection System maintenance and testing standard.

Conclusions and Recommendations

PRC-005-1, PRC-008-0, PRC-011-0, and PRC-017-0 require additions, clarifications, and definitions to insure that the Protection Systems are properly maintained and tested.

The SPCTF recommends that standards PRC-005-1, PRC-008-0, PRC-011-0, and PRC-017-0 be removed from the separate SARS in the "Draft Reliability Standards Development Plan: 2007–2009," and that they be included in a new Standard Authorization Request for a single Protection System maintenance and testing standard.

SPCTF submits the attached SAR for that purpose of consolidating PRC-005-1, PRC-008-0, PRC-011-0, and PRC-017-0 into a single standard to the Planning Committee for endorsement.

Standard Review Guidelines

Applicability
Does this reliability standard clearly identify the functional classes of entities responsible for complying with the reliability standard, with any specific additions or exceptions noted? Where multiple functional classes are identified is there a clear line of responsibility for each requirement identifying the functional class and entity to be held accountable for compliance? Does the requirement allow overlapping responsibilities between Registered Entities possibly creating confusion for who is ultimately accountable for compliance?

Does this reliability standard identify the geographic applicability of the standard, such as the entire North American bulk power system, an interconnection, or within a regional entity area? If no geographic limitations are identified, the default is that the standard applies throughout North America.

Does this reliability standard identify any limitations on the applicability of the standard based on electric facility characteristics, such as generators with a nameplate rating of 20 MW or greater, or transmission facilities energized at 200 kV or greater or some other criteria? If no functional entity limitations are identified, the default is that the standard applies to all identified functional entities.

Purpose
Does this reliability standard have a clear statement of purpose that describes how the standard contributes to the reliability of the bulk power system? Each purpose statement should include a value statement.

Performance Requirements
Does this reliability standard state one or more performance requirements, which if achieved by the applicable entities, will provide for a reliable bulk power system, consistent with good utility practices and the public interest?

Does each requirement identify who shall do what under what conditions and to what outcome?

Measurability
Is each performance requirement stated so as to be objectively measurable by a third party with knowledge or expertise in the area addressed by that requirement?

Does each performance requirement have one or more associated measures used to objectively evaluate compliance with the requirement?

If performance results can be practically measured quantitatively, are metrics provided within the requirement to indicate satisfactory performance?

Technical Basis in Engineering and Operations
Is this reliability standard based upon sound engineering and operating judgment, analysis, or experience, as determined by expert practitioners in that particular field?

Completeness
Is this reliability standard complete and self-contained? Does the standard depend on external information to determine the required level of performance?

Consequences for Noncompliance
In combination with guidelines for penalties and sanctions, as well as other ERO and regional entity compliance documents, are the consequences of violating a standard clearly known to the responsible entities?

Clear Language
Is the reliability standard stated using clear and unambiguous language? Can responsible entities, using reasonable judgment and in keeping with good utility practices, arrive at a consistent interpretation of the required performance?

Practicality
Does this reliability standard establish requirements that can be practically implemented by the assigned responsible entities within the specified effective date and thereafter?

Capability Requirements versus Performance Requirements
In general, requirements for entities to have 'capabilities' (this would include facilities for communication, agreements with other entities, etc.) should be located in the standards for certification. The certification requirements should indicate that entities have a responsibility to 'maintain' their capabilities.

Consistent Terminology
To the extent possible, does this reliability standard use a set of standard terms and definitions that are approved through the NERC reliability standards development process?

If the standard uses terms that are included in the NERC Glossary of Terms Used in Reliability Standards, then the term must be capitalized when it is used in the standard. New terms should not be added unless they have a 'unique' definition when used in a NERC reliability standard. Common terms that could be found in a college dictionary should not be defined and added to the NERC Glossary.

Are the verbs on the 'verb list' from the DT Guidelines? If not – do new verbs need to be added to the guidelines or could you use one of the verbs from the verb list?

Violation Risk Factors (Risk Factor)

High Risk Requirement

A requirement that, if violated, could directly cause or contribute to bulk electric system instability, separation, or a cascading sequence of failures, or could place the bulk electric system at an unacceptable risk of instability, separation, or cascading failures;

or a requirement in a planning time frame that, if violated, could, under emergency, abnormal, or restorative conditions anticipated by the preparations, directly cause or contribute to bulk electric system instability, separation, or a cascading sequence of failures, or could place the bulk electric system at an unacceptable risk of instability, separation, or cascading failures, or could hinder restoration to a normal condition.

Medium Risk Requirement

A requirement that, if violated, could directly affect the electrical state or the capability of the bulk electric system, or the ability to effectively monitor and control the bulk electric system. However, violation of a medium risk requirement is unlikely to lead to bulk electric system instability, separation, or cascading failures;

or a requirement in a planning time frame that, if violated, could, under emergency, abnormal, or restorative conditions anticipated by the preparations, directly and adversely affect the electrical state or capability of the bulk electric system, or the ability to effectively monitor, control, or restore the bulk electric system. However, violation of a medium risk requirement is unlikely, under emergency, abnormal, or restoration conditions anticipated by the preparations, to lead to bulk electric system instability, separation, or cascading failures, nor to hinder restoration to a normal condition.

Lower Risk Requirement

A requirement that, if violated, would not be expected to adversely affect the electrical state or capability of the bulk electric system, or the ability to effectively monitor and control the bulk electric system. A requirement that is administrative in nature;

or a requirement in a planning time frame that, if violated, would not, under the emergency, abnormal, or restorative conditions anticipated by the preparations, be expected to adversely affect the electrical state or capability of the bulk electric system, or the ability to effectively monitor, control, or restore the bulk electric system. A planning requirement that is administrative in nature.

Time Horizon

The drafting team should also indicate the time horizon available for mitigating a violation to the requirement using the following definitions:

- **Long-term Planning** — a planning horizon of one year or longer.
- **Operations Planning** — operating and resource plans from day-ahead up to and including seasonal.
- **Same-day Operations** — routine actions required within the timeframe of a day, but not real-time.
- **Real-time Operations** — actions required within one hour or less to preserve the reliability of the bulk electric system.
- **Operations Assessment** — follow-up evaluations and reporting of real time operations.

Violation Severity Levels

The drafting team should indicate a set of violation severity levels that can be applied for the requirements within a standard. ('Violation severity levels' replace existing 'levels of non-compliance.') The violation severity levels must be applied for each requirement and may be combined to cover multiple requirements, as long as it is clear which requirements are included and that all requirements are included.

The violation severity levels should be based on the following definitions:

- **Lower: mostly compliant with minor exceptions** — The responsible entity is mostly compliant with and meets the intent of the requirement but is deficient with respect to one or more minor details. Equivalent score: more than 95% but less than 100% compliant.
- **Moderate: mostly compliant with significant exceptions** — The responsible entity is mostly compliant with and meets the intent of the requirement but is deficient with respect to one or more significant elements. Equivalent score: more than 85% but less than or equal to 95% compliant.
- **High: marginal performance or results** — The responsible entity has only partially achieved the reliability objective of the requirement and is missing one or more significant elements. Equivalent score: more than 70% but less than or equal to 85% compliant.
- **Severe: poor performance or results** — The responsible entity has failed to meet the reliability objective of the requirement. Equivalent score: 70% or less compliant.

Compliance Monitor

Replace, 'Regional Reliability Organization' with 'Regional Entity'

Fill-in-the-blank Requirements

Do not include any 'fill-in-the-blank' requirements. These are requirements that assign one entity responsibility for developing some performance measures without requiring that the performance measures be included in the body of a standard – then require another entity to comply with those requirements.

Every reliability objective can be met, at least at a threshold level, by a North American standard. If we need regions to develop regional standards, such as in under-frequency load shedding, we can always write a uniform North American standard for the applicable functional entities as a means of encouraging development of the regional standards.

Requirements for Regional Reliability Organization

Do not write any requirements for the Regional Reliability Organization. Any requirements currently assigned to the RRO should be re-assigned to the applicable functional entity.

Effective Dates

Must be 1st day of 1st quarter after entities are expected to be compliant – must include time to provide notice to responsible entities of the obligation to comply. If the standard is to be actively monitored, time for the Compliance Monitoring and Enforcement Program to develop reporting instructions and modify the Compliance Data Management System(s) both at NERC and Regional Entities must be provided in the implementation plan. The effective date should be linked to the NERC BOT adoption date.

Associated Documents

If there are standards that are referenced within a standard, list the full name and number of the standard under the section called, 'Associated Documents'.

Functional Model Version 3

Review the requirements against the latest descriptions of the responsibilities and tasks assigned to functional entities as provided in pages 13 through 53 of the draft Functional Model Version 3.

PRC-005-0 — Transmission Protection System Maintenance and Testing

Version 0 Comments:

- This section should not move forward in Version 0. More procedure/data oriented, not really stand alone "standard" material but more tools or reference material for executing a standard
- R3-1.a – should breakers and switches be included in the list?
- M3-2 – what kind of evidence?
- M3-2 The "shall have evidence" phrase is vague and may be unnecessary considering that the requesting entity should know if its requested information is supplied.

Phase III & IV Comments:

- PRC 003 to 005 only address generator (and transmission) protective systems, without defining this term.
- Need to add language to ensure the Regional Requirements focus on the most impactive scenarios
- Modify applicability to clarfify that the requirements are applicable to the following:
- All protection systems on the bulk electric system.
- All generation protection systems whose misoperations impact the bulk electric system
- There is no performance requirement or measure of effectiveness of a maintenance program required by the standard

PRC-008-0 — Underfrequency Load Shedding Equipment Maintenance Programs

Version 0 Comments:

- The language for protection system maintenance and testing programs should be consistent from standard to standard. The requirement in this standard should match Standard 063, Requirement R3-1. This will provide a consistent reporting requirement for all protection system.
- From standard 063.3: The Transmission Owner, Generator Owner and Distribution Provider that owns a transmission protection system shall have a transmission protection system maintenance and testing program in place. The program(s) shall include:
- From Standard 067.3: The Transmission Owner and Distribution Provider with a UFLS program (as required by its Regional Reliability Organization) shall have a UFLS equipment maintenance and testing program in place. This UFLS equipment maintenance and testing program shall include UFLS equipment identification, the schedule for UFLS equipment testing, and the schedule for UFLS equipment maintenance.
- The "shall have evidence" phrase is vague and may be unnecessary considering that the requesting entity should know if its requested information is supplied.

PRC-011-0 — UVLS System Maintenance and Testing

Version 0 Comments:

- The "shall have evidence" phrase is vague and may be unnecessary considering that the requesting entity should know if its requested information is supplied.
- UVLS : Under voltage load shedding should not be a requirement for all parties. Those who have shunt reactors can meet the objective by not shedding load but by shedding shunt reactors. Flexibility in achieving the desired goal is appropriate.

PRC-017-0 — Special Protection System Maintenance and Testing

Version 0 Comments:

- In f, it needs to be changed to require that the last two dates of testing and maintenance are kept. This is necessary to verify an action that is required bi-annually or bi-monthly.
- The "shall have evidence" phrase is vague and may be unnecessary considering that the requesting entity should know if its requested information is supplied.

The new proposed definition of Protection System reads as follows:

Protection System:

- Protective relays which respond to electrical quantities,
- Communications systems necessary for correct operation of protective functions,
- Voltage and current sensing devices providing inputs to protective relays,
- Station dc supply, and
- Control circuitry associated with protective functions through the trip coil(s) of the circuit breakers or other interrupting devices.

NERC
NORTH AMERICAN ELECTRIC
RELIABILITY CORPORATION

Supplementary Reference and FAQ - Draft

PRC-005-2 Protection System Maintenance

January 17, 2012

RELIABILITY | ACCOUNTABILITY

3353 Peachtree Road NE
Suite 600, North Tower
Atlanta, GA 30326
404-446-2560 | www.nerc.com

Table of Contents

Table of Contents ii

1. Introduction and Summary 1

2. Need for Verifying Protection System Performance 2

2.1 Existing NERC Standards for Protection System Maintenance and Testing 2

2.2 Protection System Definition 3

2.3 Applicability of New Protection System Maintenance Standards 3

2.3.1 Frequently Asked Questions: 4

2.4 Applicable Relays 6

2.4.1 Frequently Asked Questions: 6

3. Protection Systems Product Generations 9

4. Definitions 10

4.1 Frequently Asked Questions: 10

5. Time-Based Maintenance (TMB) Programs 12

5.1 Maintenance Practices 12

5.1.1 Frequently Asked Questions: 14

5.2 Extending Time-Based Maintenance 15

5.2.1 Frequently Asked Question: 16

6. Condition-Based Maintenance (CMB) Programs 17

6.1 Frequently Asked Questions: 18

7. Time-Based Versus Condition-Based Maintenance 19

7.1 Frequently Asked Questions: 19

8. Maximum Allowable Verification Intervals 26

8.1 Maintenance Tests 26

8.1.1 Table of Maximum Allowable Verification Intervals 26
8.1.2 Additional Notes for Tables 1-1 through 1-5 and Table 3 28
8.1.3 Frequently Asked Questions: 29
8.2 Retention of Records 34
8.2.1 Frequently Asked Questions: 35
8.3 Basis for Table 1 Intervals 37
8.4 Basis for Extended Maintenance Intervals for Microprocessor Relays 38
9. Performance-Based Maintenance Process 41
9.1 Minimum Sample Size 42
9.2 Frequently Asked Questions: 44
10. Overlapping the Verification of Sections of the Protection System 57
10.1 Frequently Asked Question: 57
11. Monitoring by Analysis of Fault Records 58
11.1 Frequently Asked Question: 59
12. Importance of Relay Settings in Maintenance Programs 60
12.1 Frequently Asked Questions: 60
13. Self-Monitoring Capabilities and Limitations 63
13.1 Frequently Asked Question: 64
14. Notification of Protection System Failures 65
15. Maintenance Activities 66
15.1 Protective Relays (Table 1-1) 66
15.1.1 Frequently Asked Question: 66
15.2 Voltage & Current Sensing Devices (Table 1-3) 66
15.2.1 Frequently Asked Questions: 68
15.3 Control circuitry associated with protective functions (Table 1-5) 69

15.3.1 Frequently Asked Questions: 72

15.4 Batteries and DC Supplies (Table 1-4) 73

15.4.1 Frequently Asked Questions: 74

15.5 Associated communications equipment (Table 1-2) 88

15.5.1 Frequently Asked Questions: 88

15.6 Alarms (Table 2) 92

15.6.1 Frequently Asked Questions: 93

15.7 Distributed UFLS and UVLS Systems (Table 3) 93

15.8 Examples of Evidence of Compliance 94

15.8.1 Frequently Asked Questions: 95

References 97

Figures 98

Figure 1: Typical Transmission System 98

Figure 2: Typical Generation System 99

Figure 1 & 2 Legend – Components of Protection Systems 100

Appendix A 101

Appendix B ..... **Error! Bookmark not defined.**

1. Introduction and Summary

Note: This supplementary reference to PRC-005-2 is neither mandatory nor enforceable.

NERC currently has four Reliability Standards that are mandatory and enforceable in the United States and address various aspects of maintenance and testing of Protection and Control systems.
These standards are:

PRC-005-1 — Transmission and Generation Protection System Maintenance and Testing

PRC-008-0 — Underfrequency Load Shedding Equipment Maintenance Programs

PRC-011-0 — UVLS System Maintenance and Testing

PRC-017-0 — Special Protection System Maintenance and Testing

While these standards require that applicable entities have a maintenance program for Protection Systems, and that these entities must be able to demonstrate they are carrying out such a program, there are no specifics regarding the technical requirements for Protection System maintenance programs. Furthermore, FERC Order 693 directed additional modifications respective to Protection System maintenance programs. PRC-005-2 combines and replaces PRC-005, PRC-008, PRC-011 and PRC-017.

2. Need for Verifying Protection System Performance

Protective relays have been described as silent sentinels, and do not generally demonstrate their performance until a fault or other power system problem requires that they operate to protect power system elements, or even the entire Bulk Electric System (BES). Lacking faults, switching operations or system problems, the Protection Systems may not operate, beyond static operation, for extended periods. A misoperation - a false operation of a Protection System or a failure of the Protection System to operate, as designed, when needed - can result in equipment damage, personnel hazards, and wide area disturbances or unnecessary customer outages. Maintenance or testing programs are used to determine the performance and availability of Protection Systems.

Typically, utilities have tested Protection Systems at fixed time intervals, unless they had some incidental evidence that a particular Protection System was not behaving as expected. Testing practices vary widely across the industry. Testing has included system functionality, calibration of measuring devices, and correctness of settings. Typically, a Protection System must be visited at its installation site and, in many cases, removed from service for this testing.

Fundamentally, a Reliability Standard for Protection System Maintenance and Testing requires the performance of the maintenance activities that are necessary to detect and correct plausible age and service related degradation of the Protection System components such that a properly built and commissioned Protection System will continue to function as designed over its service life.

Similarly station batteries which are an important part of the station dc supply are not called upon to provide instantaneous dc power to the Protection System until power is required by the Protection System to operate circuit breakers or interrupting devices to clear faults or to isolate equipment.

2.1 Existing NERC Standards for Protection System Maintenance and Testing

For critical BES protection functions, NERC Standards have required that each utility or asset owner define a testing program. The starting point is the existing Standard PRC-005, briefly restated as follows:

Purpose: To document and implement programs for the maintenance of all Protection Systems affecting the reliability of the Bulk Electric System (BES) so that these Protection Systems are kept in working order.

PRC-005-1 is not specific on where the boundaries of the Protection Systems lie. However, the definition of Protection System in the NERC Glossary of Terms used in Reliability Standards indicates what must be included as a minimum.

At the beginning of the project to develop PRC-005-2, the definition of Protection System was:

Protective relays, associated communications systems, voltage and current sensing devices, station batteries and dc control circuitry.

Applicability: Owners of generation and transmission Protection Systems.

Requirements: The owner shall have a documented maintenance program with test intervals. The owner must keep records showing that the maintenance was performed at the specified intervals.

2.2 Protection System Definition

The most recently approved definition of Protection Systems is:

- Protective relays which respond to electrical quantities,
- communications systems necessary for correct operation of protective functions,
- voltage and current sensing devices providing inputs to protective relays,
- station dc supply associated with protective functions (including station batteries, battery chargers, and non-battery-based dc supply), and
- control circuitry associated with protective functions through the trip coil(s) of the circuit breakers or other interrupting devices.

2.3 Applicability of New Protection System Maintenance Standards

The BES purpose is to transfer bulk power. The applicability language has been changed from the original PRC-005:

"*...affecting the reliability of the Bulk Electric System (BES)…*"

To the present language:

"*…that are installed for the purpose of detecting faults on BES Elements (lines, buses, transformers, etc.).*"

The drafting team intends that this Standard will follow with any definition of the Bulk Electric System. There should be no ambiguity; if the element is a BES element then the Protection System protecting that element should then be included within this Standard. If there is regional variation to the definition then there will be a corresponding regional variation to the Protection Systems that fall under this Standard.

There is no way for the Standard Drafting Team to know whether a specific 230KV line, 115KV line (even 69KV line), for example, should be included or excluded. Therefore, the team set the clear intent that the Standard language should simply be applicable to Protection Systems for BES elements.

The BES is a NERC defined term that, from time to time, may undergo revisions. Additionally, there may even be regional variations that are allowed in the present and future definitions. See the NERC glossary of terms for the present, in-force, definition. See the applicable regional reliability organization for any applicable allowed variations.

While this Standard will undergo revisions in the future, this Standard will not attempt to keep up with revisions to the NERC definition of BES but rather simply make BES Protection Systems applicable.

The Standard is applied to Generator Owners (GO) and Transmission Owners (TO) because GO's and TO's have equipment that is BES equipment. The Standard brings in Distribution Providers (DP) because depending on the station configuration of a particular substation, there may be Protection System equipment installed at a non-transmission voltage level (Distribution Provider equipment) that is wholly or partially installed to protect the BES. PRC-005-2 would apply to this equipment. An example is underfrequency load-shedding, which is frequently applied well down into the distribution system to meet PRC-007-0.

As this Standard is intended to replace the existing PRC-005, PRC-008, PRC-011 and PRC-017, those Standards are used in the construction of this revision of PRC-005-1. Much of the original intent of those Standards was carried forward whenever it was possible to continue the intent without a disagreement with FERC Order 693. For example the original PRC-008 was constructed quite differently than the original PRC-005. The drafting team agrees with the intent of this and notes that distributed tripping schemes would have to exhibit multiple failures to trip before they would prove to be significant as opposed to a single failure to trip of, for example, a Transmission Protection System Bus Differential lock-out relay. While many failures of these distribution breakers could add up to be significant, it is also believed that distribution breakers are operated often on just fault clearing duty and therefore the distribution circuit breakers are operated at least as frequently as any requirements that might have appeared in this Standard.

Additionally, since this Standard will now replace PRC-011 it will be important to make the distinction between under-voltage Protection Systems that protect individual loads and Protection Systems that are UVLS schemes that protect the BES. Any UVLS scheme that had been applicable under PRC-011 will now be applicable under this revision of PRC-005-1. An example of an Under-Voltage Load Shedding scheme that is not applicable to this Standard is one in which the tripping action was intended to prevent low distribution voltage to a specific load from a transmission system that was intact except for the line that was out of service, as opposed to preventing a cascading outage or transmission system collapse.

It had been correctly noted that the devices needed for PRC-011 are the very same types of devices needed in PRC-005.

Thus a Standard written for Protection Systems of the BES can easily make the needed requirements for Protection Systems and replace some other Standards at the same time.

2.3.1 Frequently Asked Questions:

What, exactly, is the BES, or Bulk Electric System?

BES is the abbreviation for Bulk Electric System. BES is a term in the Glossary of Terms used in Reliability Standards, and is not being modified within this draft Standard.
NERC's approved definition of Bulk Electric System is:

As defined by the Regional Reliability Organization, the electrical generation resources, transmission lines, interconnections with neighboring systems, and associated equipment, generally operated at voltages of 100 kV or higher. Radial transmission facilities serving only load with one transmission source are generally not included in this definition.

The BES definition is presently under going the process of revision.

Each Regional Entity implements a definition of the Bulk Electric System that is based on this NERC definition, in some cases, supplemented by additional criteria. These regional definitions have been documented and provided to FERC as part of a *June 14, 2007 Informational Filing*.

Why is Distribution Provider included within the Applicable Entities and as a responsible entity within several of the requirements? Wouldn't anyone having relevant facilities be a Transmission Owner?

Depending on the station configuration of a particular substation, there may be Protection System equipment installed at a non-transmission voltage level (Distribution Provider equipment) that is wholly or partially installed to protect the BES. PRC-005-2 would apply to this equipment. An example is underfrequency load-shedding, which is frequently applied well down into the distribution system to meet PRC-007-0.

We have an Under Voltage Load Shedding (UVLS) system in place that prevents one of our distribution substations from supplying extremely low voltage in the case of a specific transmission line outage. The transmission line is part of the BES. Does this mean that our UVLS system falls within this Standard?

The situation as stated indicates that the tripping action was intended to prevent low distribution voltage to a specific load from a transmission system that was intact except for the line that was out of service, as opposed to preventing cascading outage or transmission system collapse.

This Standard is not applicable to this UVLS.

We have a UFLS or UVLS scheme that sheds the necessary load through distribution-side circuit breakers and circuit reclosers. Do the trip-test requirements for circuit breakers apply to our situation?

No. Distributed tripping schemes would have to exhibit multiple failures to trip before they would prove to be significant as opposed to a single failure to trip of, for example, a Transmission Protection System Bus Differential lock-out relay. While many failures of these distribution breakers could add up to be significant, it is also believed that distribution breakers are operated often on just fault clearing duty and therefore the distribution circuit breakers are operated at least as frequently as any requirements that might have appeared in this Standard.

We have a UFLS scheme that, in some locales, sheds the necessary load through non-BES circuit breakers and occasionally even circuit switchers. Do the trip-test requirements for circuit breakers apply to our situation?

If your "non-BES circuit breaker" has been brought into this standard by the inclusion of UFLS requirements and otherwise would not have been brought into this standard, then the answer is that there are no trip-test requirements. For these devices that are otherwise non-BES assets, these tripping schemes would have to exhibit multiple failures to trip before they would prove to be as significant as (for example) a single failure to trip of a Transmission Protection System Bus Differential lock-out relay.

2.4 Applicable Relays

The NERC Glossary definition has a Protection System including relays, dc supply, current and voltage sensing devices, dc control circuitry and associated communications circuits. The relays to which this Standard applies are those protective relays that respond to electrical quantities and provide a trip output to trip coils, dc control circuitry or associated communications equipment. This definition extends to IEEE device # 86 (lockout relay) and IEEE device # 94 (tripping or trip-free relay) as these devices are tripping relays that respond to the trip signal of the protective relay that processed the signals from the current and voltage sensing devices.

Relays that respond to non-electrical inputs or impulses (such as, but not limited to, vibration, pressure, seismic, thermal or gas accumulation) are not included.

2.4.1 Frequently Asked Questions:

Are power circuit reclosers, reclosing relays, closing circuits and auto-restoration schemes covered in this Standard?

No. This Standard covers protective relays that use electrical quantity measurements to determine anomalies and to trip a portion of the BES. Reclosers, reclosing relays, closing circuits and auto-restoration schemes are used to cause devices to close as opposed to electrical-measurement relays and their associated circuits that cause circuit interruption from the BES; such closing devices and schemes are more appropriately covered under other NERC Standards. There is one notable exception: since PRC-017 will be superseded by PRC-005-2, then if a Special Protection System (previously covered by PRC-017) incorporates automatic closing of breakers, then the SPS related closing devices must be tested accordingly.

I use my protective relays only as sources of metered quantities and breaker status for SCADA and EMS through a substation distributed RTU or data concentrator to the control center. What are the maintenance requirements for the relays?

This Standard addresses Protection Systems that are installed for the purpose of detecting Faults on BES Elements (lines, buses, transformers, etc.) Protective relays, providing only the functions mentioned in the question, are not included.

Is a Sudden Pressure Relay an auxiliary tripping relay?

No. IEEE C37.2-2008 assigns the device number 94 to auxiliary tripping relays. Sudden pressure relays are assigned device number 63. Sudden pressure relays are presently excluded from the Standard because it does not utilize voltage and/or current measurements to determine anomalies. Devices that use anything other than electrical detection means are excluded. The trip path from a sudden pressure device is a part of the Protection System control circuitry. The sensing element is omitted from PRC-005-2 testing requirements because the SDT is unaware of industry recognized testing protocol for the sensing elements. The SDT believes that Protection Systems that trip (or can trip) the BES should be included. This position is consistent with the currently-approved PRC-005-1a, consistent with the SAR for Project 2007-17, and understands this to be consistent with the position of FERC staff.

My mechanical device does not operate electrically and does not have calibration settings; what maintenance activities apply?

You must conduct a test(s) to verify the integrity of any trip circuit that is a part of a Protection System. This Standard does not cover circuit breaker maintenance or transformer maintenance. The Standard also does not presently cover testing of devices such as sudden pressure relays (63), temperature relays (49), and other relays which respond to mechanical parameters rather than electrical parameters. There is an expectation that fault pressure relays and other non-electrically initiated devices may become part of some maintenance standard. This Standard presently covers trip paths. It might seem incongruous to test a trip path without a present requirement to test the device and thus be arguably more work for nothing. But, one simple test to verify the integrity of such a trip path could be (but is not limited to) a voltage presence test as a dc voltage monitor might do if it were installed monitoring that same circuit.

The Standard specifically mentions auxiliary and lock-out relays; what is an auxiliary tripping relay?

An auxiliary relay, IEEE Device Number 94, is described in IEEE Standard C37.2-2008 as "A device that functions to trip a circuit breaker, contactor, or equipment; to permit immediate tripping by other devices; or to prevent immediate reclosing of a circuit interrupter if it should open automatically, even though its closing circuit is maintained closed."

What is a lock-out relay?

A lock-out relay, IEEE Device Number 86, is described in IEEE Standard C37.2 as "A device that trips and maintains the associated equipment or devices inoperative until it is reset by an operator, either locally or remotely."

3. Protection Systems Product Generations

The likelihood of failure and the ability to observe the operational state of a critical Protection System, both depends on the technological generation of the relays as well as how long they have been in service. Unlike many other transmission asset groups, protection and control systems have seen dramatic technological changes spanning several generations. During the past 20 years, major functional advances are primarily due to the introduction of microprocessor technology for power system devices such as primary measuring relays, monitoring devices, control systems, and telecommunications equipment.

Modern microprocessor based relays have six significant traits that impact a maintenance strategy:

- Self monitoring capability - the processors can check themselves, peripheral circuits, and some connected substation inputs and outputs such as trip coil continuity. Most relay users are aware that these relays have self monitoring, but are not focusing on exactly what internal functions are actually being monitored. As explained further below, every element critical to the Protection System must be monitored, or else verified periodically.
- Ability to capture fault records showing how the Protection System responded to a fault in its zone of protection, or to a nearby fault for which it is required not to operate.
- Ability to meter currents and voltages, as well as status of connected circuit breakers, continuously during non-fault times. The relays can compute values such as MW and MVAR line flows that are sometimes used for operational purposes such as SCADA.
- Data communications via ports that provide remote access to all of the results of Protection System monitoring, recording, and measurement.
- Ability to trip or close circuit breakers and switches through the Protection System outputs, on command from remote data communications messages or from relay front panel button requests.
- Construction from electronic components some of which have shorter technical life or service life than electromechanical components of prior Protection System generations.

There have been significant advances in the technology behind the other components of Protection Systems. Microprocessors are now a part of Battery Chargers, Associated Communications Equipment, Voltage and Current Measuring Devices and even the control circuitry (in the form of software-latches replacing lock-out relays, etc).

Any Protection System component can have self-monitoring and alarming capability, not just relays. Because of this technology, extended time intervals can find their way into all components of the Protection System.

This standard also recognizes the distinct advantage of using advanced technology to justifiably defer or even eliminate traditional maintenance. Just as a hand-held calculator does not require routine testing and calibration, neither does a calculation buried in a microprocessor-based

device that results in a "lock-out". Thus the software-latch 86 that replaces an electro-mechanical 86 does not require routine trip testing. Any trip circuitry associated with the "soft 86" would still need applicable verification activities performed but the actual "86" does not have to be "electrically operated" or even toggled.

4. Definitions

Protection System Maintenance Program (PSMP) — An ongoing program by which Protection System components are kept in working order and proper operation of malfunctioning components is restored. A maintenance program for a specific component includes one or more of the following activities:

- Verify — Determine that the component is functioning correctly.
- Monitor — Observe the routine in-service operation of the component.
- Test — Apply signals to a component to observe functional performance or output behavior, or to diagnose problems.
- Inspect — Detect visible signs of component failure, reduced performance and degradation.
- Calibrate — Adjust the operating threshold or measurement accuracy of a measuring element to meet the intended performance requirement.

4.1 Frequently Asked Questions:

Why does PRC-005-2 not specifically require maintenance and testing procedures as reflected in the previous Standard, PRC-005-1?

PRC-005-1 does not require detailed maintenance and testing procedures, but instead requires summaries of such procedures, and is not clear on what is actually required. PRC-005-2 requires a documented maintenance program, and is focused on establishing requirements rather than prescribing methodology to meet those requirements. Between the activities identified in the tables 1-1 through 1-5 Table 2 and Table 3 (collectively the "Tables"), and the various components of the definition established for a "Protection System Maintenance Program", PRC-005-2 establishes the activities and time-basis for a Protection System Maintenance Program to a level of detail not previously required.

Please clarify what is meant by restore in the definition of maintenance.

The description of "Restore" in the definition of a Protection System Maintenance Program, addresses corrective activities necessary to assure that the component is returned to working order following the discovery of its failure or malfunction. The Maintenance Activities specified in the Tables do not present any requirements related to Restoration; R5 of the Standard does require that the entity "shall demonstrate efforts to correct any identified unresolved

maintenance issues". Some examples of restoration (or correction of maintenance-correctable issues) include, but are not limited to, replacement of capacitors in distance relays to bring them to working order; replacement of relays, or other Protection System components, to bring the Protection System to working order; upgrade of electromechanical or solid-state protective relays to micro-processor based relays following the discovery of failed components. Restoration, as used in this context is not to be confused with Restoration rules as used in system operations. Maintenance activity necessarily includes both the detection of problems and the repairs needed to eliminate those problems. This Standard does not identify all of the Protection System problems that must be detected and eliminated, rather it is the intent of this Standard that an entity determines the necessary working order for their various devices and keeps them in working order. If an equipment item is repaired or replaced then the entity can restart the maintenance-time-interval-clock if desired, however the replacement of equipment does not remove any documentation requirements that would have been required to verify compliance with time-interval requirements; in other words do not discard maintenance data that goes to verify your work.

The retention of documentation for new and/or replaced equipment is all about proving that the maintenance intervals had been in compliance. For example, a long range plan of upgrades might lead an entity to ignore required maintenance; retaining the evidence of prior maintenance that existed before any retirements and upgrades proves compliance with the Standard.

Please clarify what is meant by "...demonstrate efforts to correct an unresolved maintenance issue..."; why not measure the completion of the corrective action?

Management of completion of the identified unresolved maintenance issue is a complex topic that falls outside of the scope of this standard. There can be any number of supply, process and management problems that make setting repair deadlines impossible. The SDT specifically chose the phrase "demonstrate efforts to correct" (with guidance from NERC Staff) because of the concern that many more complex unresolved maintenance issues might require greater than the remaining maintenance interval to resolve (and yet still be a "closed-end process"). For example, a problem might be identified on a VRLA battery during a 6 month check. In instances such as one that requiring battery replacement as part of the long term resolution, it is highly unlikely that the battery could be replaced in time to meet the 6 calendar month requirement for this maintenance activity. The SDT does not believe entities should be found in violation of a maintenance program requirement because of the inability to complete a remediation program within the original maintenance interval. The SDT does believe corrective actions should be timely but concludes it would be impossible to postulate all possible remediation projects and therefore, impossible to specify bounding time frames for resolution of all possible unresolved maintenance issues or what documentation might be sufficient to provide proof that effective corrective action is being undertaken.

5. Time-Based Maintenance (TMB) Programs

Time-based maintenance is the process in which Protection Systems are maintained or verified according to a time schedule. The scheduled program often calls for technicians to travel to the physical site and perform a functional test on Protection System components. However, some components of a TBM program may be conducted from a remote location - for example, tripping a circuit breaker by communicating a trip command to a microprocessor relay to determine if the entire Protection System tripping chain is able to operate the breaker. Similarly, all Protection System components can have the ability to remotely conduct tests, either on-command or routinely, the running of these tests can extend the time interval between hands-on maintenance activities.

5.1 Maintenance Practices

Maintenance and testing programs often incorporate the following types of maintenance practices:

- TBM – time-based maintenance – externally prescribed maximum maintenance or testing intervals are applied for components or groups of components. The intervals may have been developed from prior experience or manufacturers' recommendations. The TBM verification interval is based on a variety of factors, including experience of the particular asset owner, collective experiences of several asset owners who are members of a country or regional council, etc. The maintenance intervals are fixed, and may range in number of months or in years.

  TBM can include review of recent power system events near the particular terminal. Operating records may verify that some portion of the Protection System has operated correctly since the last test occurred. If specific protection scheme components have demonstrated correct performance within specifications, the maintenance test time clock can be reset for those components.

- PBM – Performance-Based Maintenance - intervals are established based on analytical or historical results of TBM failure rates on a statistically significant population of similar components. Some level of TBM is generally followed. Statistical analyses accompanied by adjustments to maintenance intervals are used to justify continued use of PBM-developed extended intervals when test failures or in-service failures occur infrequently.

- CBM – condition-based maintenance – continuously or frequently reported results from non-disruptive self monitoring of components demonstrate operational status as those components remain in service. Whatever is verified by CBM does not require manual testing, but taking advantage of this requires precise technical focus on exactly what parts are included as part of the self diagnostics. While the term "Condition-Based-Maintenance" (CBM) is no longer used within the Standard itself, it is important to note that the concepts of CBM are a part of the Standard (in the form of extended time intervals through status-monitoring). These extended time intervals are only allowed (in the absence of PBM) if the condition of the device is monitored (CBM). As a consequence of the "monitored-basis-time-intervals" existing within the Standard the

explanatory discussions within this Supplementary Reference concerned with CBM will remain in this reference and are discussed as CBM.

Microprocessor based Protection System components that perform continuous self-monitoring verify correct operation of most components within the device. Self-monitoring capabilities may include battery continuity, float voltages, unintentional grounds, the ac signal inputs to a relay, analog measuring circuits, processors and memory for measurement, protection, and data communications, trip circuit monitoring, and protection or data communications signals (and many, many more measurements). For those conditions, failure of a self-monitoring routine generates an alarm and may inhibit operation to avoid false trips. When internal components, such as critical output relay contacts, are not equipped with self-monitoring, they can be manually tested. The method of testing may be local or remote, or through inherent performance of the scheme during a system event.

The TBM is the overarching maintenance process of which the other types are subsets. Unlike TBM, PBM intervals are adjusted based on good or bad experiences. The CBM verification intervals can be hours or even milliseconds between non-disruptive self monitoring checks within or around components as they remain in service.

TBM, PBM, and CBM can be combined for individual components, or within a complete Protection System. The following diagram illustrates the relationship between various types of maintenance practices described in this section. In the Venn diagram the overlapping regions show the relationship of TBM with PBM historical information and the inherent continuous monitoring offered through CBM.

This figure shows:

- Region 1: The TBM intervals that are increased based on known reported operational condition of individual components that are monitoring themselves.
- Region 2: The TBM intervals that are adjusted up or down based on results of analysis of maintenance history of statistically significant population of similar products that have been subject to TBM.
- Region 3: Optimal TBM intervals based on regions 1 and 2.

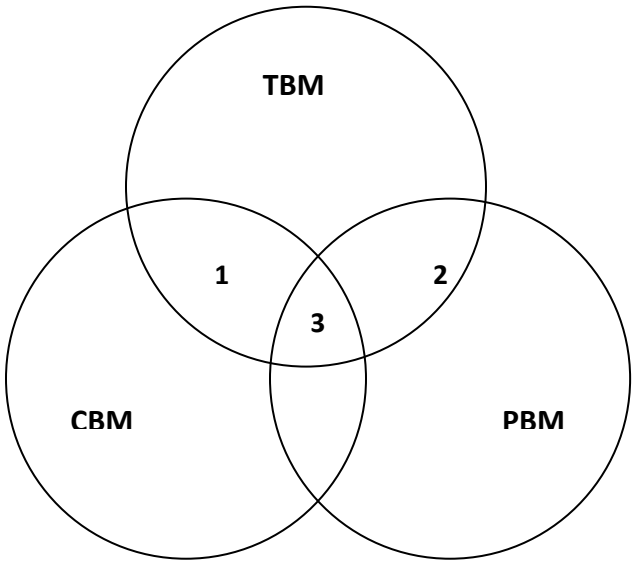

Relationship of time-based maintenance types

5.1.1 Frequently Asked Questions:

The Standard seems very complicated, and is difficult to understand. Can it be simplified?

Because the Standard is establishing parameters for condition-based Maintenance (R1) and Performance-Based Maintenance (R2) in addition to simple time-based Maintenance, it does appear to be complicated. At its simplest, an entity needs to ONLY perform time-based maintenance according to the unmonitored rows of the Tables. If an entity then wishes to take advantage of monitoring on its Protection System components and its available lengthened time intervals then it may, as long as the component has the listed monitoring attributes. If an entity wishes to use historical performance of its Protection System components to perform Performance-Based Maintenance, then R2 applies.

Please see the following diagram, which provides a “flow chart” of the Standard.

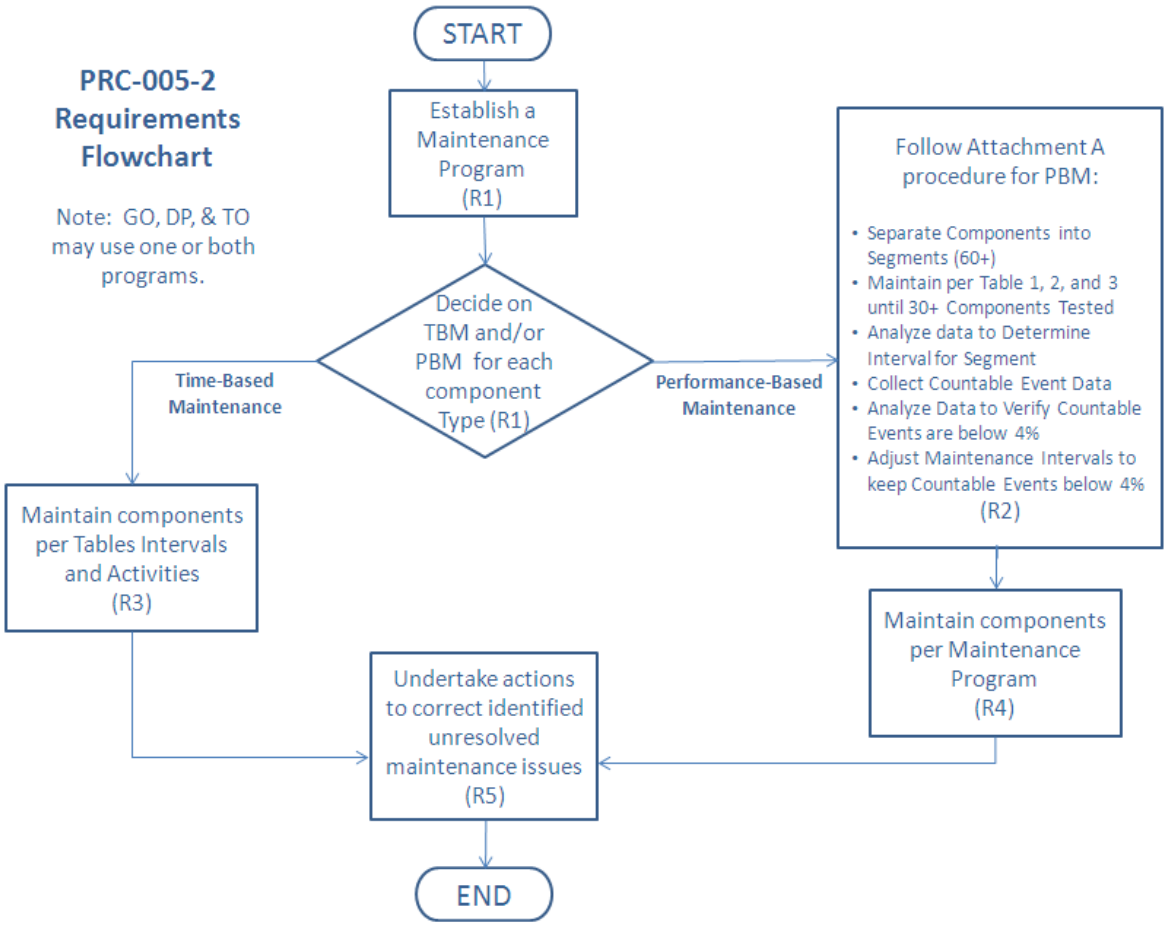

We have an electromechanical (unmonitored) relay that has a trip output to a lockout relay (unmonitored) which trips our transformer off-line by tripping the transformer's high-side and low-side circuit breakers. What testing must be done for this system?

This system is made up of components that are all unmonitored. Assuming a time-based Protection System maintenance program schedule (as opposed to a Performance-Based maintenance program), each component must be maintained per the most frequent hands-on activities listed in the Tables .

5.2 Extending Time-Based Maintenance

All maintenance is fundamentally time-based. Default time-based intervals are commonly established to assure proper functioning of each component of the Protection System, when data on the reliability of the components is not available other than observations from time-based maintenance. The following factors may influence the established default intervals:

- If continuous indication of the functional condition of a component is available (from relays or chargers or any self monitoring device), then the intervals may be extended or manual testing may be eliminated. This is referred to as condition-based maintenance or CBM. CBM is valid only for precisely the components subject to monitoring. In the case of microprocessor-based relays, self-monitoring may not include automated diagnostics of every component within a microprocessor.
- Previous maintenance history for a group of components of a common type may indicate that the maintenance intervals can be extended while still achieving the desired level of performance. This is referred to as Performance-Based Maintenance or PBM. It is also sometimes referred to as reliability-centered maintenance or RCM, but PBM is used in this document.
- Observed proper operation of a component may be regarded as a maintenance verification of the respective component or element in a microprocessor-based device. For such an observation, the maintenance interval may be reset only to the degree that can be verified by data available on the operation. For example, the trip of an electromechanical relay for a fault verifies the trip contact and trip path, but only through the relays in series that actually operated; one operation of this relay cannot verify correct calibration.

Excessive maintenance can actually decrease the reliability of the component or system. It is not unusual to cause failure of a component by removing it from service and restoring it. The improper application of test signals may cause failure of a component. For example, in electromechanical overcurrent relays, test currents have been known to destroy convolution springs.

In addition, maintenance usually takes the component out of service, during which time it is not able to perform its function. Cutout switch failures, or failure to restore switch position, commonly lead to protection failures.

5.2.1 Frequently Asked Question:

If I show the protective device out of service while it is being repaired then can I add it back as a new protective device when it returns? If not, my relay testing history would show that I was out of compliance for the last maintenance cycle.

The maintenance and testing requirements (R5) (in essence) state "…shall demonstrate efforts to correct any identified unresolved maintenance issues. The type of corrective activity is not stated; however it could include repairs or replacements.

Your documentation requirements will increase, of course, to demonstrate that your device tested bad and had corrective actions initiated. Your regional entity could very well ask for documentation showing status of your corrective actions.

6. Condition-Based Maintenance (CBM) Programs

Condition-based maintenance is the process of gathering and monitoring the information available from modern microprocessor-based relays and other intelligent electronic devices (IEDs) that monitor Protection System elements. These devices generate monitoring information during normal operation, and the information can be assessed at a convenient location remote from the substation. The information from these relays and IEDs is divided into two basic types:

1. Information can come from background self-monitoring processes, programmed by the manufacturer, or by the user in device logic settings. The results are presented by alarm contacts or points, front panel indications, and by data communications messages.
2. Information can come from event logs, captured files, and/or oscillographic records for faults and disturbances, metered values, and binary input status reports. Some of these are available on the device front panel display, but may be available via data communications ports. Large files of fault information can only be retrieved via data communications. These results comprise a mass of data that must be further analyzed for evidence of the operational condition of the Protection System.

Using these two types of information, the user can develop an effective maintenance program carried out mostly from a central location remote from the substation. This approach offers the following advantages:

1. **Non-invasive Maintenance:** The system is kept in its normal operating state, without human intervention for checking. This reduces risk of damage, or risk of leaving the system in an inoperable state after a manual test. Experience has shown that keeping human hands away from equipment known to be working correctly enhances reliability.
2. **Virtually Continuous Monitoring:** CBM will report many hardware failure problems for repair within seconds or minutes of when they happen. This reduces the percentage of problems that are discovered through incorrect relaying performance. By contrast, a hardware failure discovered by TBM may have been there for much of the time interval between tests, and there is a good chance that some devices will show health problems by incorrect operation before being caught in the next test round. The frequent or continuous nature of CBM makes the effective verification interval far shorter than any required TBM maximum interval.

To use the extended time intervals available through Condition Based Maintenance simply look for the rows in the Tables that refer to monitored items.

6.1 Frequently Asked Questions:

My microprocessor relays and dc circuit alarms are contained on relay panels in a 24-hour attended control room. Does this qualify as an extended time interval condition-based (monitored) system?

Yes, provided the station attendant (plant operator, etc.) monitors the alarms and other indications (comparable to the monitoring attributes) and reports them within the given time limits that are stated in the criteria of the Tables.

When documenting the basis for inclusion of components into the appropriate levels of monitoring as per Requirement R1 (Part 1.4) of the Standard, is it necessary to provide this documentation about the device by listing of every component and the specific monitoring attributes of each device?

No. While maintaining this documentation on the device level would certainly be permissible, it is not necessary. Global statements can be made to document appropriate levels of monitoring for the entire population of a component type or portion thereof.

For example, it would be permissible to document the conclusion that all BES substation dc supply battery chargers are Monitored by stating the following within the program description:

> "All substation dc supply battery chargers are considered Monitored and subject to the rows for monitored equipment of Table 1-4 requirements as all substation dc supply battery chargers are equipped with dc voltage alarms and ground detection alarms that are sent to the manned control center."

Similarly, it would be acceptable to use a combination of a global statement and a device level list of exclusions. Example:

> "Except as noted below, all substation dc supply battery chargers are considered Monitored and subject to the rows for monitored equipment of Table 1-4 requirements as all substation dc supply battery chargers are equipped with dc voltage alarms and ground detection alarms that are sent to the manned control center. The dc supply battery chargers of Substation X, Substation Y, and Substation Z are considered Unmonitored and subject to the rows for unmonitored equipment in Table 1-4 requirements as they are not equipped with ground detection capability."

Regardless whether this documentation is provided by device listing of monitoring attributes, by global statements of the monitoring attributes of an entire population of component types, or by some combination of these methods, it should be noted that auditors may request supporting drawings or other documentation necessary to validate the inclusion of the device(s) within the appropriate level of monitoring. This supporting background information need not be maintained within the program document structure but should be retrievable if requested by an auditor.

7. Time-Based Versus Condition-Based Maintenance

Time-based and condition-based (or monitored) maintenance programs are both acceptable, if implemented according to technically sound requirements. Practical programs can employ a *combination of time-based and condition-based maintenance.* The Standard requirements introduce the concept of optionally using condition monitoring as a documented element of a maintenance program.

The Federal Energy Regulatory Commission (FERC), in its Order Number 693 Final Rule dated March 16, 2007 (18 CFR Part 40, Docket No. RM06-16-000) on Mandatory Reliability Standards for the Bulk-Power System, directed NERC to submit a modification to PRC-005-1 that includes a requirement that maintenance and testing of a Protection System must be carried out within a maximum allowable interval that is appropriate to the type of the Protection System and its impact on the reliability of the Bulk Power System. Accordingly, this Supplementary Reference Paper refers to the specific maximum allowable intervals in PRC-005-2. The defined time limits allow for longer time intervals if the maintained component is monitored.

A key feature of condition-based monitoring is that it effectively reduces the time delay between the moment of a protection failure and time the Protection System owner knows about it, for the monitored segments of the Protection System. In some cases, the verification is practically continuous - the time interval between verifications is minutes or seconds. Thus, technically sound, condition-based verification, meets the verification requirements of the FERC order even more effectively than the strictly time-based tests of the same system components.

The result is that:

This NERC Standard permits utilities to use a technically sound approach and to take advantage of remote monitoring, data analysis, and control capabilities of modern Protection Systems to reduce the need for periodic site visits and invasive testing of components by on-site technicians. This periodic testing must be conducted within the maximum time intervals specified in Tables 1-1 through 1-5 and Table 2 of PRC-005-2.

7.1 Frequently Asked Questions:

What is a Calendar Year?

Calendar Year - January 1 through December 31 of any year. As an example, if an event occurred on June 17, 2009 and is on a “One Calendar Year Interval”, the next event would have to occur on or before December 31, 2010.

Please provide an example of “4 Calendar Months”.

If a maintenance activity is described as being needed every 4 Calendar Months then it is performed in a (given) month and due again 4 months later. For example a battery bank is inspected in month number 1 then it is due again before the end of the month number5. And specifically consider that you perform your battery inspection on January 3, 2010 then it must be inspected again before the end of May. Another example could be that a 4-month inspection

was performed in January is due in May, but if performed in March (instead of May) would still be due four months later therefore the activity is due again July. Basically every "4Calendar Months" means to add 4 months from the last time the activity was performed.

Please provide an example of the unmonitored versus other levels of monitoring available?

An unmonitored Protection System has no monitoring and alarm circuits on the Protection System components. A Protection System component that has monitoring attributes but no alarm output connected is considered to be unmonitored.

A monitored Protection System or an individual monitored component of a Protection System has monitoring and alarm circuits on the Protection System components. The alarm circuits must alert, within 24 hours, a location wherein corrective action can be initiated. This location might be, but not limited to an Operations Center, Dispatch Office, Maintenance Center or even a portable SCADA system.

There can be a combination of monitored and unmonitored Protection Systems within any given scheme, substation or plant; there can also be a combination of monitored and unmonitored components within any given Protection System.

Example #1: A combination of monitored and unmonitored components within a given Protection System might be:

- A microprocessor relay with an internal alarm connected to SCADA to alert 24-hr staffed operations center; it has internal self diagnosis and alarming. (monitored)
- Instrumentation transformers, with no monitoring, connected as inputs to that relay. (unmonitored)
- A Vented Lead-Acid battery with a low voltage alarm for the station dc supply voltage and an unintentional grounds detection alarm connected to SCADA. (monitoring varies)
- A circuit breaker with a trip coil and the trip circuit is not monitored. (unmonitored)

Given the particular components and conditions, and using Table 1 and Table 2 , the particular components have maximum activity intervals of:

Every 4 calendar months,inspect:

- Electrolyte level (station dc supply voltage and unintentional ground detection is being maintained more frequently by the monitoring system).

Every 18 calendar months, verify/inspect the following:

- Battery bank ohmic values to station battery baseline (if performance tests are not opted)
- Battery charger float voltage
- Battery rack integrity
- Cell condition of all individual battery cells (where visible)
- Battery continuity

- Battery terminal connection resistance
- Battery cell-to-cell resistance (where available to measure)

Every 6 calendar years, perform/verify the following:

- Battery performance test (if internal ohmic tests are not opted)
- Verify that each trip coil is able to operate the circuit breaker, interrupting device, or mitigating device
- For electromechanical lock-out relays, electrical operation of electromechanical trip

Every 12 calendar years, verify the following:

- Microprocessor relay settings are as specified
- Operation of the microprocessor's relay inputs and outputs that are essential to proper functioning of the Protection System
- Acceptable measurement of power system input values seen by the microprocessor protective relay
- Verify that current and voltage signal values are provided to the protective relays
- Protection System component monitoring for the battery system signals are conveyed to a location where corrective action can be initiated
- The microprocessor relay alarm signals are conveyed to a location where corrective action can be initiated
- Verify all trip paths in the control circuitry associated with protective functions through the trip coil(s) of the circuit breakers or other interrupting devices
- Auxiliary outputs that are in the trip path shall be maintained as detailed in Table 1-5 of the standard under the 'Unmonitored control circuitry associated with protective functions" section'
- Auxiliary outputs not in a trip path (i.e. annunciation or DME input) are not required, by this Standard, to be checked.

Example #2: A combination of monitored and unmonitored components within a given Protection System might be:

- A microprocessor relay with integral alarm that is not connected to SCADA. (unmonitored)
- Current and voltage signal values, with no monitoring, connected as inputs to that relay. (unmonitored)
- A Vented Lead-Acid battery with a low voltage alarm for the station dc supply voltage and an unintentional grounds detection alarm connected to SCADA. (monitoring varies)
- A circuit breaker with a trip coil, with no circuits monitored. (unmonitored)

Given the particular components and conditions, and using the Table 1 ("Maximum Allowable Testing Intervals and Maintenance Activities") and Table 2 ("Alarming Paths and Monitoring"), the particular components have maximum activity intervals of:

Every 4 calendar months, inspect:

- Electrolyte level (Station dc supply voltage and unintentional ground detection is being maintained more frequently by the monitoring system)

Every 18 calendar months, verify/inspect the following:

- Battery bank ohmic values to station battery baseline (if performance tests are not opted)
- Battery charger float voltage
- Battery rack integrity
- Cell condition of all individual battery cells (where visible)
- Battery continuity
- Battery terminal connection resistance
- Battery cell-to-cell resistance (where available to measure)

Every 6 calendar years, verify/perform the following:

- Verify operation of the relay inputs and outputs that are essential to proper functioning of the Protection System
- Verify acceptable measurement of power system input values as seen by the relays
- Verify that each trip coil is able to operate the circuit breaker, interrupting device, or mitigating device
- For electromechanical lock-out relays, electrical operation of electromechanical trip
- Battery performance test (if internal ohmic tests are not opted)

Every 12 calendar years, verify the following:

- Current and voltage signal values are provided to the protective relays
- Protection System component monitoring for the battery system signals are conveyed to a location where corrective action can be initiated
- All trip paths in the control circuitry associated with protective functions through the trip coil(s) of the circuit breakers or other interrupting devices
- Auxiliary outputs that are in the trip path shall be maintained as detailed in Table 1-5 of the standard under the 'Unmonitored control circuitry associated with protective functions" section'
- Auxiliary outputs not in a trip path (i.e. annunciation or DME input) are not required, by this Standard, to be checked

Example #3: A combination of monitored and unmonitored components within a given Protection System might be:

- A microprocessor relay with alarm connected to SCADA to alert 24-hr staffed operations center; it has internal self diagnosis and alarms. (monitored)
- Current and voltage signal values, with monitoring, connected as inputs to that relay (monitored)
- Vented Lead-Acid battery without any alarms connected to SCADA (unmonitored)
- Circuit breaker with a trip coil, with no circuits monitored (unmonitored)

Given the particular components, conditions, and using the Table 1 ("Maximum Allowable Testing Intervals and Maintenance Activities") and Table 2 ("Alarming Paths and Monitoring"), the particular components shall have maximum activity intervals of:

Every 4 calendar months, verify/inspect the following:

- Station dc supply voltage
- For unintentional grounds
- Electrolyte level

Every 18 calendar months, verify/inspect the following:

- Battery bank ohmic values to station battery baseline (if performance tests are not opted)
- Battery charger float voltage
- Battery rack integrity
- Battery continuity
- Battery terminal connection resistance
- Battery cell-to-cell resistance (where available to measure)
- Condition of all individual battery cells (where visible)

Every 6 calendar years, perform/verify the following:

- Battery performance test (if internal ohmic tests are not opted)
- Verify that each trip coil is able to operate the circuit breaker, interrupting device, or mitigating device
- For electromechanical lock-out relays, electrical operation of electromechanical trip

Every 12 calendar years, verify the following:

- The microprocessor relay alarm signals are conveyed to a location where corrective action can be taken
- Microprocessor relay settings are as specified

- Operation of the microprocessor's relay inputs and outputs that are essential to proper functioning of the Protection System
- Acceptable measurement of power system input values seen by the microprocessor protective relay
- Verify all trip paths in the control circuitry associated with protective functions through the trip coil(s) of the circuit breakers or other interrupting devices
- Auxiliary outputs that are in the trip path shall be maintained as detailed in Table 1-5 of the standard under the 'Unmonitored control circuitry associated with protective functions" section'
- Auxiliary outputs not in a trip path (i.e. annunciation or DME input) are not required, by this Standard, to be checked

Why do components have different maintenance activities and intervals if they are monitored?

The intent behind different activities and intervals for monitored equipment is to allow less frequent manual intervention when more information is known about the condition of Protection System components. Condition-Based Maintenance is a valuable asset to improve reliability.

Can all components in a Protection System be monitored?

No. For some components in a Protection System, monitoring will not be relevant. For example a battery will always need some kind of inspection.

We have a 30 year old oil circuit breaker with a red indicating lamp on the substation relay panel that is illuminated only if there is continuity through the breaker trip coil. There is no SCADA monitor or relay monitor of this trip coil. The line protection relay package that trips this circuit breaker is a microprocessor relay that has an integral alarm relay that will assert on a number of conditions that includes a loss of power to the relay. This alarm contact connects to our SCADA system and alerts our 24-hour operations center of relay trouble when the alarm contact closes. This microprocessor relay trips the circuit breaker only and does not monitor trip coil continuity or other things such as trip current. Are the components monitored or not? How often must I perform maintenance?

The protective relay is monitored and can be maintained every 12 years or when an unresolved maintenance issue arises. The control circuitry can be maintained every 12 years. The circuit breaker trip coil(s) has to be electrically operated at least once every 6 years.

8. Maximum Allowable Verification Intervals

The Maximum Allowable Testing Intervals and Maintenance Activities show how CBM with newer device types can reduce the need for many of the tests and site visits that older Protection System components require. As explained below, there are some sections of the Protection System that monitoring or data analysis may not verify. Verifying these sections of the Protection Systems requires some persistent TBM activity in the maintenance program. However, some of this TBM can be carried out remotely - for example, exercising a circuit breaker through the relay tripping circuits using the relay remote control capabilities can be used to verify function of one tripping path and proper trip coil operation, if there has been no fault or routine operation to demonstrate performance of relay tripping circuits.

8.1 Maintenance Tests

Periodic maintenance testing is performed to ensure that the protection and control system is operating correctly after a time period of field installation. These tests may be used to ensure that individual components are still operating within acceptable performance parameters - this type of test is needed for components susceptible to degraded or changing characteristics due to aging and wear. Full system performance tests may be used to confirm that the total Protection System functions from measurement of power system values, to properly identifying fault characteristics, to the operation of the interrupting devices.

8.1.1 Table of Maximum Allowable Verification Intervals

Table 1 (collectively known as Table 1, individually called out as Tables 1-1 through 1-5), Table 2 and Table 3 in the Standard, specify maximum allowable verification intervals for various generations of Protection Systems and categories of equipment that comprise Protection Systems. The right column indicates maintenance activities required for each category.

The types of components are illustrated in Figures 1 and 2 at the end of this paper. Figure 1 shows an example of telecommunications-assisted transmission Protection System comprising substation equipment at each terminal and a telecommunications channel for relaying between the two substations. Figure 2 shows an example of a generation Protection System. The various subsystems of a Protection System that need to be verified are shown.

Non-distributed UFLS, UVLS, and SPS are additional categories of Table 1 that are not illustrated in these figures. Non-distributed UFLS, UVLS and SPS all use identical equipment as Protection Systems in the performance of their functions and therefore have the same maintenance needs.

Distributed UFLS and UVLS systems, which use local sensing on the distribution system and trip co-located non-BES interrupting devices, are addressed in Table 3 with reduced maintenance activities.

While it is easy to associate protective relays to multiple levels of monitoring, it is also true that most of the components that can make up a Protection System can also have technological advancements that place them into higher levels of monitoring.

To use the Maintenance Activities and Intervals Tables from PRC-005-2:

- First find the Table associated with your component. The tables are arranged in the order of mention in the definition of Protection System;
    - Table 1-1 is for protective relays,
    - Table 1-2 is for the associated communications systems,
    - Table 1-3 is for current and voltage sensing devices,
    - Table 1-4 is for station dc supply and
    - Table 1-5 is for control circuits.
    - Table 2, is for alarms; this was broken out to simplify the other tables.
    - Table 3 is for components which make-up distributed UFLS and UVLS systems.
- Next look within that Table for your device and its degree of monitoring. The tables have different hands-on maintenance activities prescribed depending upon the degree to which you monitor your equipment. Find the maintenance activity that applies to the monitoring level that you have on your piece of equipment.
- This Maintenance activity is the minimum maintenance activity that must be documented.
- If your Performance Based Maintenance (PBM) plan requires <u>more activities</u> then you must perform and document to this higher standard. (Note that this does not apply unless you utilize PBM.)
- After the maintenance activity is known, check the Maximum Maintenance Interval; this time is the maximum time allowed between hands-on maintenance activity cycles of this component.
- If your Performance Based Maintenance plan requires activities <u>more often</u> than the Tables maximum then you must perform and document those activities to your more stringent standard. (Note that this does not apply unless you utilize PBM.)
- Any given component of a Protection System can be determined to have a degree of monitoring that may be different from another component within that same Protection System. For example, in a given Protection System it is possible for an entity to have a monitored protective relay and an unmonitored associated communications system; this combination would require hands-on maintenance activity on the relay at least once every 12 years and attention paid to the communications system as often as every 4 months.
- An entity does not have to utilize the extended time intervals made available by this use of condition-based monitoring. An easy choice to make is to simply utilize the unmonitored level of maintenance made available on each of the 5 Tables. While the maintenance activities resulting from this choice would require more maintenance man-hours, the maintenance requirements may be simpler to document and the resulting maintenance plans may be easier to create.

For each Protection System component, Table 1 shows maximum allowable testing intervals for the various degrees of monitoring. These degrees of monitoring, or levels, range from the legacy unmonitored through a system that is more comprehensively monitored.

It has been noted here that an entity may have a PSMP that is more stringent than PRC-005-2. There may be any number of reasons that an entity chooses a more stringent plan than the minimums prescribed within PRC-005-2, most notable of which is an entity using performance based maintenance methodology. If an entity has a Performance Based Maintenance program then that plan must be followed even if the plan proves to be more stringent than the minimums laid out in the Tables.

8.1.2 Additional Notes for Tables 1-1 through 1-5 and Table 3

1. For electromechanical relays, adjustment is required to bring measurement accuracy within the tolerance needed by the asset owner. Microprocessor relays with no remote monitoring of alarm contacts, etc, are unmonitored relays and need to be verified within the Table interval as other unmonitored relays but may be verified as functional by means other than testing by simulated inputs.
2. Microprocessor relays typically are specified by manufacturers as not requiring calibration, but acceptable measurement of power system input values must be verified (verification of the Analog to Digital [A/D] converters) within the Table intervals. The integrity of the digital inputs and outputs that are used as protective functions must be verified within the Table intervals.
3. Any Phasor Measurement Unit (PMU) function whose output is used in a Protection System or SPS (as opposed to a monitoring task) must be verified as a component in a Protection System.
4. In addition to verifying the circuitry that supplies dc to the Protection System, the owner must maintain the station dc supply. The most widespread station dc supply is the station battery and charger. Unlike most Protection System components physical inspection of station batteries for signs of component failure, reduced performance, and degradation are required to ensure that the station battery is reliable enough to deliver dc power when required. IEEE Standards 450, 1188, and 1106 for Vented Lead-Acid, Valve-Regulated Lead-Acid, and Nickel-Cadmium batteries, respectively (which are the most commonly used substation batteries on the NERC BES) have been developed as an important reference source of maintenance recommendations. The Protection System owner might use the applicable IEEE recommended practice which contains information and recommendations concerning the maintenance, testing and replacement of its substation battery. However, the methods prescribed in these IEEE recommendations cannot be specifically required because they do not apply to all battery applications.
5. Aggregated small entities might distribute the testing of the population of UFLS/UVLS systems, and large entities will usually maintain a portion of these systems in any given year. Additionally, if relatively small quantities of such systems do not perform properly, it will not affect the integrity of the overall program. Thus these distributed systems have decreased requirements as compared to other Protection Systems.

6. Voltage & Current Sensing Device circuit input connections to the Protection System relays can be verified by (but not limited to) comparison of measured values on live circuits or by using test currents and voltages on equipment out of service for maintenance. The verification process can be automated or manual. The values should be verified to be as expected, (phase value and phase relationships are both equally important to verify).
7. "End-to-end test" as used in this Supplementary Reference is any testing procedure that creates a remote input to the local communications-assisted trip scheme. While this can be interpreted as a GPS-type functional test it is not limited to testing via GPS. Any remote scheme manipulation that can cause action at the local trip path can be used to functionally-test the dc Control Circuitry. A documented real-time trip of any given trip path is acceptable in lieu of a functional trip test. It is possible, with sufficient monitoring, to be able to verify each and every parallel trip path that participated in any given dc Control Circuit trip. Or, another possible solution is that a single trip path from a single monitored relay can be verified to be the trip path that successfully tripped during a real-time operation. The variations are only limited by the degree of engineering and monitoring that an entity desires to pursue.
8. A/D verification may use relay front panel value displays, or values gathered via data communications. Groupings of other measurements (such as vector summation of bus feeder currents) can be used for comparison if calibration requirements assure acceptable measurement of power system input values.
9. Notes 1-8 attempt to describe some testing activities; they do not represent the only methods to achieve these activities but rather some possible methods. Technological advances, ingenuity and/or industry accepted techniques can all be used to satisfy maintenance activity requirements; the Standard is technology and method neutral in most cases.

8.1.3 Frequently Asked Questions:

What is meant by "Verify that settings are as specified" maintenance activity in Table 1-1?

Verification of settings is an activity directed mostly towards microprocessor based relays. For relay maintenance departments that choose to test microprocessor based relays in the same manner as electromechanical relays are tested, the testing process sometimes requires that some specific functions be disabled. Later tests might enable the functions previously disabled but perhaps still other functions or logic statements were then masked out. It is imperative that, when the relay is placed into service, the settings in the relay be the settings that were intended to be in that relay or as the Standard states "…settings are as specified."

Many of the microprocessor based relays available today have software tools which provide this functionality and generate reports for this purpose.

For evidence or documentation of this requirement a simple recorded acknowledgement that the settings were checked to be as specified is sufficient.

The drafting team was careful not to require "…that the relay settings be correct…" because it was believed that this might then place a burden of proof that the specified settings would result in the correct intended operation of the interrupting device. While that is a noble intention, the measurable proof of such a requirement is immense. The intent is that settings of the component be as specified at the conclusion of maintenance activities, whether those settings may have "drifted" since the prior maintenance or whether changes were made as part of the testing process.

Are electromechanical relays included in the "Verify that settings are as specified" maintenance activity in Table 1-1?

Verification of settings is an activity directed towards the application of protection related functions of microprocessor based relays. Electromechanical relays require calibration verification by voltage and/or current injection, and thus the settings are verified during calibration activity. In the example of a time-overcurrent relay, a minor deviation in time dial, versus the settings, may be acceptable as long as the relay calibration is within accepted tolerances at the injected current amplitudes. A major deviation may require further investigation, as it could indicate a problem with the relay or an incorrect relay style for the application.

The verification of phase current and voltage measurements by comparison to other quantities seems reasonable. How, though, can I verify residual or neutral currents, or 3V0 voltages, by comparison, when my system is closely balanced?

Since these inputs are verified at commissioning, maintenance verification requires ensuring that phase quantities are as expected and that 3IO and 3VO quantities appear equal to or close to 0.

These quantities also may be verified by use of oscillographic records for connected microprocessor relays as recorded during system disturbances. Such records may compare to similar values recorded at other locations by other microprocessor relays for the same event, or compared to expected values (from short circuit studies) for known fault locations.

What does this Standard require for testing an auxiliary tripping relay?

Table 1 and Table 3 requires that a trip test must verify that the auxiliary tripping relay(s) and/or lockout relay(s) which are directly in a trip path from the protective relay to the interrupting device trip coil operate(s) electrically. Auxiliary outputs not in a trip path (i.e. annunciation or DME input) are not required, by this Standard, to be checked.

Do I have to perform a full end-to-end test of a Special Protection System?

No. All portions of the SPS need to be maintained, and the portions must overlap, but the overall SPS does not need to have a single end-to-end test. In other words it may be tested in piecemeal fashion provided all of the pieces are verified.

What about SPS interfaces between different entities or owners?

As in all of the Protection System requirements, SPS segments can be tested individually thus minimizing the need to accommodate complex maintenance schedules.

What do I have to do if I am using a phasor measurement unit (PMU) as part of a Protection System or Special Protection System?

Any Phasor Measurement Unit (PMU) function whose output is used in a Protection System or Special Protection System (as opposed to a monitoring task) must be verified as a component in a Protection System.

How do I maintain a Special Protection System or relay sensing for non-distributed UFLS or UVLS Systems?

Since components of the SPS, UFLS, and UVLS are the same types of components as those in Protection Systems then these components should be maintained like similar components used for other Protection System functions. In many cases the devices for SPS, UFLS and UVLS are also used for other protective functions. The same maintenance activities apply with the exception that distributed systems (UFLS and UVLS) have fewer dc supply and control circuitry maintenance activity requirements.

For the testing of the output action, verification may be by breaker tripping, but may be verified in overlapping segments. For example an SPS that trips a remote circuit breaker might be tested by testing the various parts of the scheme in overlapping segments. Another method is to document the real-time tripping of an SPS scheme should that occur. Forced trip tests of circuit breakers (etc) that are a part of distributed UFLS or UVLS schemes are not required.

The established maximum allowable intervals do not align well with the scheduled outages for my power plant. Can I extend the maintenance to the next scheduled outage following the established maximum interval?

No. You must complete your maintenance within the established maximum allowable intervals in order to be compliant. You will need to schedule your maintenance during available outages to complete your maintenance as required, even if it means that you may do protective relay maintenance more frequently than the maximum allowable intervals. The maintenance intervals were selected with typical plant outages, among other things, in mind.

If I am unable to complete the maintenance as required due to a major natural disaster (hurricane, earthquake, etc), how will this affect my compliance with this Standard.

The Sanction Guidelines of the North American Electric Reliability Corporation effective January 15, 2008 provides that the Compliance Monitor will consider extenuating circumstances when considering any sanctions.

What if my observed testing results show a high incidence of out-of-tolerance relays, or, even worse, I am experiencing numerous relay misoperations due to the relays being out-of-tolerance?

The established maximum time intervals are mandatory only as a not-to-exceed limitation. The establishment of a maximum is measurable. But, any entity can choose to test some or all of their Protection System components more frequently (or, to express it differently, exceed the minimum requirements of the Standard). Particularly, if you find that the maximum intervals in the Standard do not achieve your expected level of performance, it is understandable that you would maintain the related equipment more frequently. A high incidence of relay Misoperations is in no one's best interest.

We believe that the 4-month interval between inspections is unneccessary, why can we not perform these inspections twice per year?

The standard drafting team, through the comment process, has discovered that routine monthly inspections are not the norm. To align routine station inspections with other important inspections the 4-month interval was chosen. In lieu of station visits many activities can be accomplished with automated monitoring and alarming.

Our maintenance plan calls for us to perform routine protective relay tests every 3 years; if we are unable to achieve this schedule but we are able to complete the procedures in less than the Maximum Time Interval then are we in or out of compliance?

According to R3, if you have a time-based maintenance program then you will be in violation of the standard only if you exceed the maximum maintenance intervals prescribed in the Tables. According to R4, if your device in question is part of a Performance Based Maintenance program then you will be in violation of the standard if you fail to meet your PSMP even if you do not exceed the maximum maintenance intervals prescribed in the Tables. The intervals in tables are associated with TBM and CBM; Attachment A is associated with PBM.

Please provide a sample list of devices or systems that must be verified in a generator, generator step-up transformer, and generator connected station auxiliary transformer to meet the requirements of this Maintenance Standard.

Examples of typical devices and systems that may directly trip the generator, or trip through a lockout relay may include but are not necessarily limited to:

- Fault protective functions, including distance functions, voltage-restrained overcurrent functions, or voltage-controlled overcurrent functions
- Loss-of-field relays
- Volts-per-hertz relays
- Negative sequence overcurrent relays
- Over voltage and under voltage protection relays

- Stator-ground relays
- Communications-based Protection Systems such as transfer-trip systems
- Generator differential relays
- Reverse power relays
- Frequency relays
- Out-of-step relays
- Inadvertent energization protection
- Breaker failure protection

For generator step up or generator-connected station auxiliary transformers, operation of any of the following associated protective relays frequently would result in a trip of the generating unit and, as such, would be included in the program:

- Transformer differential relays
- Neutral overcurrent relay
- Phase overcurrent relays

Relays which trip breakers serving station auxiliary loads such as pumps, fans, or fuel handling equipment, etc., need not be included in the program even if the loss of the those loads could result in a trip of the generating unit. Furthermore, relays which provide protection to secondary unit substation (SUS) or low switchgear transformers and relays protecting other downstream plant electrical distribution system components are not included in the scope of this program even if a trip of these devices might eventually result in a trip of the generating unit. For example, a thermal overcurrent trip on the motor of a coal-conveyor belt could eventually lead to the tripping of the generator, but it does not cause the trip.

In the case where a plant does not have a generator connected station service transformer such that it is normally fed from a system connected station service transformer, is it still the drafting team's intent to exclude the protection systems for these system connected auxiliary transformers from scope even when the loss of the normal (system connected) station service transformer will result in a trip of a BES generating facility?

The SDT does not intend that the system-connected station auxiliary transformers be included in the Applicability. The generator-connected station service transformers are often connected to the generator bus directly without an interposing breaker; thus, the Protection Systems on these transformers will trip the generator as discussed in 4.2.5.1.

What is meant by "verify operation of the relay inputs and outputs that are essential to proper functioning of the Protection System?"

Any input or output (of the relay) that "affects the tripping" of the breaker is included in the scope of I/O of the relay to be verified. By "affects the tripping" one needs to realize that sometimes there are more Inputs and Outputs than simply the output to the trip coil. Many important protective functions include things like breaker fail initiation, zone timer initiation

and sometimes even 52a/b contact inputs are needed for a protective relay to correctly operate.

Each input should be "picked up" or "turned on and off" and verified as changing state by the microprocessor of the relay. Each output should be "operated" or "closed and opened" from the microprocessor of the relay and the output should be verified to change state on the output terminals of the relay. One possible method of testing inputs of these relays is to "jumper" the needed dc voltage to the input and verify that the relay registered the change of state.

Electromechanical lock-out relays (86) (used to convey the tripping current to the trip coils) need to be electrically operated to prove the capability of the device to change state. These tests need to be accomplished at least every 6 years, unless PBM methodology is applied.

The contacts on the 86 or auxiliary tripping relays (94) that change state to pass on the trip current to a breaker trip coil need only be checked every twelve years with the control circuitry.

What is the difference between a distributed UFLS/UVLS and a non-distributed UFLS/UVLS scheme?

A distributed UFLS or UVLS scheme contains individual relays which make independent load shed decisions based on applied settings and localized voltage and/or current inputs. A distributed scheme may involve an enable/disable contact in the scheme and still be considered a distributed scheme. A non-distributed UFLS or UVLS scheme involves a system where there is some type of centralized measurement and load shed decision being made. A non-distributed UFLS/UVLS scheme is considered similar to an SPS scheme and falls under Table 1 for maintenance activities and intervals.

8.2 Retention of Records

PRC-005-1 describes a reporting or auditing cycle of one year and retention of records for three years. However, with a three year retention cycle, the records of verification for a Protection System might be discarded before the next verification, leaving no record of what was done if a Misoperation or failure is to be analyzed.

PRC-005-2 corrects this by requiring:

The Transmission Owner, Generator Owner, and Distribution Provider shall each retain documentation of the two most recent performances of each distinct maintenance activity for the Protection System components, or to the previous scheduled (on-site) audit date, whichever is longer.

This requirement assures that the documentation shows that the interval between maintenance cycles correctly meets the maintenance interval limits. The requirement is actually alerting the industry to documentation requirements already implemented by audit teams. Evidence of compliance bookending the interval shows interval accomplished instead of proving only your planned interval.

The SDT is aware that, in some cases, the retention period could be relatively long. But, the retention of documents simply helps to demonstrate compliance.

8.2.1 Frequently Asked Questions:

Please use a specific example to demonstrate the data retention requirements.

The data retention requirements are intended to allow the availability of maintenance records to demonstrate that the time intervals in your maintenance plan were upheld. For example: "Company A" has a maintenance plan that requires its electromechanical protective relays be tested every 3 calendar years with a maximum allowed grace period of an additional 18 months. This entity would be required to maintain its records of maintenance of its last two routine scheduled tests. Thus its test records would have a latest routine test as well as its previous routine test. The interval between tests is therefore provable to an auditor as being within "Company A's" stated maximum time interval of 4.5 years.

The intent is not to require three test results proving two time intervals, but rather have two test results proving the last interval. The drafting team contends that this minimizes storage requirements while still having minimum data available to demonstrate compliance with time intervals.

If an entity prefers to utilize Performance Based Maintenance then statistical data may well be retained for extended periods to assist with future adjustments in time intervals.

If an equipment item is replaced then the entity can restart the maintenance-time-interval-clock if desired, however the replacement of equipment does not remove any documentation requirements that would have been required to verify compliance with time-interval requirements; in other words do not discard maintenance data that goes to verify your work.

The retention of documentation for new and/or replaced equipment is all about proving that the maintenance intervals had been in compliance. For example, a long range plan of upgrades might lead an entity to ignore required maintenance; retaining the evidence of prior maintenance that existed before any retirements and upgrades proves compliance with the Standard.

What does this Maintenance Standard say about commissioning? Is it necessary to have documentation in your maintenance history of the completion of commission testing?

This Standard does not establish requirements for commission testing. Commission testing includes all testing activities necessary to conclude that a facility has been built in accordance with design. While a thorough commission testing program would include, either directly or indirectly, the verification of all those Protection System attributes addressed by the maintenance activities specified in the Tables of PRC-005-2, verification of the adequacy of initial installation necessitates the performance of testing and inspections that go well beyond these routine maintenance activities. For example, commission testing might set baselines for future tests; perform acceptance tests and/or warranty tests; utilize testing methods that are not generally done routinely like staged-fault-tests.

However, many of the Protection System attributes which are verified during commission testing are not subject to age related or service related degradation and need not be re-verified

within an ongoing maintenance program. Example – it is not necessary to re-verify correct terminal strip wiring on an ongoing basis.

PRC-005-2 assumes that thorough commission testing was performed prior to a Protection System being placed in service. PRC-005-2 requires performance of maintenance activities that are deemed necessary to detect and correct plausible age and service related degradation of components such that a properly built and commission tested Protection System will continue to function as designed over its service life.

It should be noted that commission testing frequently is performed by a different organization than that which is responsible for the ongoing maintenance of the Protection System. Furthermore, the commission testing activities will not necessarily correlate directly with the maintenance activities required by the Standard. As such, it is very likely that commission testing records will deviate significantly from maintenance records in both form and content and therefore, it is not necessary to maintain commission testing records within the maintenance program documentation.

Notwithstanding the differences in records, an entity would be wise to retain commissioning records to show a maintenance start date. (See below). An entity that requires that their commissioning tests have, at a minimum, the requirements of PRC-005-2 would help that entity prove time interval maximums by setting the initial time clock.

How do you determine the initial due date for maintenance?

The initial due date for maintenance should be based upon when a Protection System was tested. Alternatively, an entity may choose to use the date of completion of the commission testing of the Protection System component and the system was placed into service as the starting point in determining its first maintenance due dates. Whichever method is chosen, for newly installed Protection Systems the components should not be placed into service until minimum maintenance activities have taken place.

It is conceivable that there can be a (substantial) difference in time between the date of testing as compared to the date placed into service. The use of the “Calendar Year” language can help determine the next due date without too much concern about being non-compliant for missing test dates by a small amount (provided your dates are not already at the end of a year). However, if there is a substantial amount of time difference between testing and in-service dates then the testing date should be followed because it is the degradation of components that is the concern. While accuracy fluctuations may decrease when components are not energized there are cases when degradation can take place even though the device is not energized. Minimizing the time between commissioning tests and in-service dates will help.

If I miss two battery inspections four times out of 100 Protection System components on my transmission system, does that count as 2 percent or 8 percent when counting Violation Severity Level (VSL) for R3?

The entity failed to complete its scheduled program on two of its one hundred Protection System components which would equate to two percent for application to the VSL Table for Requirement R3. This VSL is written to compare missed components to total components. In this case 2 components out of 100 were missed or 2 %.

How do I achieve a "grace period" without being out of compliance?

According to R3, a strictly time-based maintenance program would only be in violation if the maximum time interval of the Tables is exceeded. The objective here is to create a time extension within your own PSMP that still does not violate the maximum time intervals stated in the standard. Remember that the maximum time intervals listed in the Tables cannot be extended.

For the purposes of this example, concentrating on just unmonitored protective relays,– Table 1-1 specifies a maximum time interval (between the mandated maintenance activities) of 6 calendar years. Your plan must ensure that your unmonitored relays are tested at least once every 6 calendar years. You could, within your PSMP, require that your unmonitored relays be tested every 4 calendar years with a maximum allowable time extension of 18 calendar months. This allows an entity to have deadlines set for the auto-generation of work orders but still have the flexibility in scheduling complex work schedules. This also allows for that 18 calendar months to act as a buffer, in effect a grace period within your PSMP, in the event of unforeseen events. You will note that this example of a maintenance plan interval has a planned time of 4 years; it also has a built-in time extension allowed within the PSMP and yet does not exceed the maximum time interval allowed by the Standard. So while there are no time extensions allowed beyond the Standard, an entity can still have substantial flexibility to maintain their Protection System components.

8.3 Basis for Table 1 Intervals

When developing the original *Protection System Maintenance – A Technical Reference* in 2007, the SPCTF collected all available data from Regional Entities (REs) on time intervals recommended for maintenance and test programs. The recommendations vary widely in categorization of relays, defined maintenance actions, and time intervals, precluding development of intervals by averaging. The SPCTF also reviewed the 2005 Report [2] of the IEEE Power System Relaying Committee Working Group I-17 (Transmission Relay System Performance Comparison). Review of the I-17 report shows data from a small number of utilities, with no company identification or means of investigating the significance of particular results.

To develop a solid current base of practice, the SPCTF surveyed its members regarding their maintenance intervals for electromechanical and microprocessor relays, and asked the members to also provide definitively-known data for other entities. The survey represented 470 GW of peak load, or 64% of the NERC peak load. Maintenance interval averages were compiled by weighting reported intervals according to the size (based on peak load) of the reporting

utility. Thus, the averages more accurately represent practices for the large populations of Protection Systems used across the NERC regions.

The results of this survey with weighted averaging indicate maintenance intervals of 5 years for electromechanical or solid state relays, and 7 years for unmonitored microprocessor relays.

A number of utilities have extended maintenance intervals for microprocessor relays beyond 7 years, based on favorable experience with the particular products they have installed. To provide a technical basis for such extension, the SPCTF authors developed a recommendation of 10 years using the Markov modeling approach from [1] as summarized in Section 8.4. The results of this modeling depend on the completeness of self-testing or monitoring. Accordingly, this extended interval is allowed by Table 1 only when such relays are monitored as specified in the attributes of monitoring contained in Tables 1-1 through 1-5 and Table 2. Monitoring is capable of reporting Protection System health issues that are likely to affect performance within the 10 year time interval between verifications.

It is important to note that, according to modeling results, Protection System availability barely changes as the maintenance interval is varied below the 10-year mark. Thus, reducing the maintenance interval does not improve Protection System availability. With the assumptions of the model regarding how maintenance is carried out, reducing the maintenance interval actually degrades Protection System availability.

8.4 Basis for Extended Maintenance Intervals for Microprocessor Relays

Table 1 allows maximum verification intervals that are extended based on monitoring level. The industry has experience with self-monitoring microprocessor relays that leads to the Table 1 value for a monitored relay as explained in Section 8.3. To develop a basis for the maximum interval for monitored relays in their *Protection System Maintenance – A Technical Reference*, the SPCTF used the methodology of Reference [1], which specifically addresses optimum routine maintenance intervals. The Markov modeling approach of [1] is judged to be valid for the design and typical failure modes of microprocessor relays.

The SPCTF authors ran test cases of the Markov model to calculate two key probability measures:

- Relay Unavailability - the probability that the relay is out of service due to failure or maintenance activity while the power system element to be protected is in service.
- Abnormal Unavailability - the probability that the relay is out of service due to failure or maintenance activity when a fault occurs, leading to failure to operate for the fault.

The parameter in the Markov model that defines self-monitoring capability is ST (for self test). ST = 0 if there is no self-monitoring; ST = 1 for full monitoring. Practical ST values are estimated to range from .75 to .95. The SPCTF simulation runs used constants in the Markov model that were the same as those used in [1] with the following exceptions:

Sn, Normal tripping operations per hour = 21600 (reciprocal of normal fault clearing time of 10 cycles)

Sb, Backup tripping operations per hour = 4320 (reciprocal of backup fault clearing time of 50 cycles)

Rc, Protected component repairs per hour = 0.125 (8 hours to restore the power system)

Rt, Relay routine tests per hour = 0.125 (8 hours to test a Protection System)

Rr, Relay repairs per hour = 0.08333 (12 hours to complete a Protection System repair after failure)

Experimental runs of the model showed low sensitivity of optimum maintenance interval to these parameter adjustments.

The resulting curves for Relay Unavailability and Abnormal Unavailability versus maintenance interval showed a broad minimum (optimum maintenance interval) in the vicinity of 10 years – the curve is flat, with no significant change in either unavailability value over the range of 9, 10, or 11 years. This was true even for a relay Mean Time between Failures (MTBF) of 50 years, much lower than MTBF values typically published for these relays. Also, the Markov modeling indicates that both the relay unavailability and abnormal unavailability actually become higher with more frequent testing. This shows that the time spent on these more frequent tests yields no failure discoveries that approach the negative impact of removing the relays from service and running the tests.

The PSMT SDT discussed the practical need for "time-interval extensions" or "grace periods" to allow for scheduling problems that resulted from any number of business contingencies. The time interval discussions also focused on the need to reflect industry norms surrounding Generator outage frequencies. Finally it was again noted that FERC Order 693 demanded maximum time intervals. "Maximum time intervals" by their very term negates any "time-interval extension" or "grace periods". To recognize the need to follow industry norms on Generator outage frequencies and accommodate a form of time-interval extension while still following FERC Order 693 the Standard Drafting Team arrived at a 6 year interval for the electromechanical relay instead of the 5 year interval arrived at by the SPCTF. The PSMT SDT has followed the FERC directive for a *maximum* time interval and has determined that no extensions will be allowed. Six years has been set for the maximum time interval between manual maintenance activities. This maximum time interval also works well for maintenance cycles that have been in use in generator plants for decades.

For monitored relays, the PSMT SDT notes that the SPCTF called for 10 years as the interval between maintenance activities. This 10 year interval was chosen even though there was "…no significant change in unavailability value over the range of 9, 10, or 11 years. This was true even for a relay Mean Time between Failures (MTBF) of 50 years…" The Standard Drafting Team again sought to align maintenance activities with known successful practices and outage schedules. The Standard does not allow extensions on any component of the Protection System; thus the maximum allowed interval for these components has been set to 12 years. Twelve years also fits well into the traditional maintenance cycles of both substations and generator plants.

Also of note is the Table's use of the term "Calendar" in the column for "Maximum Maintenance Interval". The PSMT SDT deemed it necessary to include the term "Calendar" to facilitate annual maintenance planning, scheduling and implementation. This need is the result of known occurrences of system requirements that could cause maintenance schedules to be missed by a few days or weeks. The PSMT SDT chose the term "Calendar" to preclude the need

to have schedules be met to the day. An electromechanical protective relay that is maintained in year #1 need not be revisited until 6 years later (year #7). For example: a relay was maintained April 10, 2008; maintenance would need to be completed no later than December 31, 2014.

Though not a requirement of this Standard, to stay in line with many Compliance Enforcement Agencies audit processes an entity should define, within their own PSMP, the entity's use of terms like annual, calendar year, etc. Then, once this is within the PSMP the entity should abide by their chosen language.

9. Performance-Based Maintenance Process

In lieu of using the Table 1 intervals, a Performance-Based Maintenance process may be used to establish maintenance intervals (*PRC-005 Attachment A Criteria for a Performance-Based Protection System Maintenance Program*). A Performance-Based Maintenance process may justify longer maintenance intervals, or require shorter intervals relative to Table 1. In order to use a Performance-Based Maintenance process, the documented maintenance program must include records of repairs, adjustments, and corrections to covered Protection Systems in order to provide historical justification for intervals other than those established in Table 1. Furthermore, the asset owner must regularly analyze these records of corrective actions to develop a ranking of causes. Recurrent problems are to be highlighted, and remedial action plans are to be documented to mitigate or eliminate recurrent problems.

Entities with Performance-Based Maintenance track performance of Protection Systems, demonstrate how they analyze findings of performance failures and aberrations, and implement continuous improvement actions. Since no maintenance program can ever guarantee that no malfunction can possibly occur, documentation of a Performance-Based Maintenance program would serve the utility well in explaining to regulators and the public a Misoperation leading to a major system outage event.

A Performance-Based Maintenance program requires auditing processes like those included in widely used industrial quality systems (such as ***ISO 9001-2000, Quality management systems — Requirements;*** or applicable parts of the NIST Baldridge National Quality Program). The audits periodically evaluate:

- The completeness of the documented maintenance process
- Organizational knowledge of and adherence to the process
- Performance metrics and documentation of results
- Remediation of issues
- Demonstration of continuous improvement.

In order to opt into a Performance-Based Maintenance (PBM) program the asset owner must first sort the various Protection System components into population segments. Any population segment must be comprised of at least 60 individual units; if any asset owner opts for PBM but does not own 60 units to comprise a population then that asset owner may combine data from other asset owners until the needed 60 units is aggregated. Each population segment must be composed of a grouping of Protection Systems or components of a consistent design standard or particular model or type from a single manufacturer and subjected to similar environmental factors. For example: One segment cannot be comprised of both GE & Westinghouse electro-mechanical lock-out relays; likewise, one segment cannot be comprised of 60 GE lock-out relays, 30 of which are in a dirty environment and the remaining 30 from a clean environment. This PBM process cannot be applied to batteries but can be applied to all other components of a Protection System including (but not limited to) specific battery chargers, instrument transformers, trip coils and/or control circuitry (etc.).

9.1 Minimum Sample Size

Large Sample Size

An assumption that needs to be made when choosing a sample size is "the sampling distribution of the sample mean can be approximated by a normal probability distribution." The Central Limit Theorem states: "In selecting simple random samples of size *n* from a population, the sampling distribution of the sample mean *x* can be approximated by a normal probability distribution as the sample size becomes large." (Essentials of Statistics for Business and Economics, Anderson, Sweeney, Williams, 2003)

To use the Central Limit Theorem in statistics, the population size should be large. The references below are supplied to help define what is large.

> "… whenever we are using a large simple random sample (rule of thumb: n>=30), the central limit theorem enables us to conclude that the sampling distribution of the sample mean can be approximated by a normal distribution." (Essentials of Statistics for Business and Economics, Anderson, Sweeney, Williams, 2003)
>
> "If samples of size n, when n>=30, are drawn from any population with a mean *u* and a standard deviation σ, the sampling distribution of sample means approximates a normal distribution. The greater the sample size, the better the approximation." (Elementary Statistics - Picturing the World, Larson, Farber, 2003)
>
> "The sample size is large (generally n>=30)… (Introduction to Statistics and Data Analysis - Second Edition, Peck, Olson, Devore, 2005)
>
> "… the normal is often used as an approximation to the *t* distribution in a test of a null hypothesis about the mean of a normally distributed population when the population variance is estimated from a relatively large sample. A sample size exceeding 30 is often given as a minimal size in this connection." (Statistical Analysis for Business Decisions, Peters, Summers, 1968)

Error of Distribution Formula

Beyond the large sample size discussion above, a sample size requirement can be estimated using the bound on the Error of Distribution Formula when the expected result is of a "Pass/Fail" format and will be between 0 and 1.0.

The Error of Distribution Formula is:

$$B = z\sqrt{\frac{\pi(1-\pi)}{n}}$$

Where:

B = bound on the error of distribution (allowable error)

z = standard error

π = expected failure rate

n = sample size required

Solving for n provides:

$$n = \pi(1-\pi)\left(\frac{z}{B}\right)^2$$

Minimum Population Size to use Performance-Based Program

One entity's population of components should be large enough to represent a sizeable sample of a vendor's overall population of manufactured devices. For this reason the following assumptions are made:

B = 5%

z = 1.96 (This equates to a 95% confidence level)

π = 4%

Using the equation above, n=59.0.

Minimum Sample Size to evaluate Performance-Based Program

The number of components that should be included in a sample size for evaluation of the appropriate testing interval can be smaller because a lower confidence level is acceptable since the sample testing is repeated or updated annually. For this reason, the following assumptions are made:

B = 5%

z = 1.44 (85% confidence level)

π = 4%

Using the equation above, n=31.8.

Recommendation

Based on the above discussion, a sample size should be at least 30 to allow use of the equation mentioned. Using this and the results of the equation, the following numbers are recommended (and required within the Standard):

Minimum Population Size to use Performance-Based Maintenance Program = 60

Minimum Sample Size to evaluate Performance-Based Program = 30.

Once the population segment is defined then maintenance must begin within the intervals as outlined for the device described in the Tables 1-1 through 1-5. Time intervals can be lengthened provided the last year's worth of components tested (or the last 30 units maintained, whichever is more) had fewer than 4% countable events. It is notable that 4% is specifically chosen because an entity with a small population (60 units) would have to adjust its time intervals between maintenance if more than 1 countable event was found to have occurred during the last analysis period. A smaller percentage would require that entity to adjust the time interval between maintenance activities if even one unit is found out of tolerance or causes a Misoperation.

The minimum number of units that can be tested in any given year is 5% of the population. Note that this 5% threshold sets a practical limitation on total length of time between intervals at 20 years.

If at any time the number of countable events equals or exceeds 4% of the last year's tested components (or the last 30 units maintained, whichever is more) then the time period between manual maintenance activities must be decreased. There is a time limit on reaching the decreased time at which the countable events is less than 4%; this must be attained within three years.

9.2 Frequently Asked Questions:

I'm a small entity and cannot aggregate a population of Protection System components to establish a segment required for a Performance-Based Protection System Maintenance Program. How can I utilize that opportunity?

Multiple asset owning entities may aggregate their individually owned populations of individual Protection System components to create a segment that crosses ownership boundaries. All entities participating in a joint program should have a single documented joint management process, with consistent Protection System Maintenance Programs (practices, maintenance intervals and criteria), for which the multiple owners are individually responsible with respect to the requirements of the Standard. The requirements established for Performance-Based Maintenance must be met for the overall aggregated program on an ongoing basis.

The aggregated population should reflect all factors that affect consistent performance across the population, including any relevant environmental factors such as geography, power-plant vs. substation, and weather conditions.

Can an owner go straight to a Performance-Based Maintenance program schedule, if they have previously gathered records?

Yes. An owner can go to a Performance-Based Maintenance program immediately. The owner will need to comply with the requirements of a Performance-Based Maintenance program as listed in the Standard. Gaps in the data collected will not be allowed; therefore, if an owner finds that a gap exists such that they cannot prove that they have collected the data as required for a Performance-Based Maintenance program then they will need to wait until they can prove compliance.

When establishing a Performance-Based Maintenance program, can I use test data from the device manufacturer, or industry survey results, as results to help establish a basis for my Performance-Based intervals?

No. You must use actual in-service test data for the components in the segment.

What types of misoperations or events are not considered countable events in the Performance-Based Protection System Maintenance (PBM) Program?

Countable events are intended to address conditions that are attributed to hardware failure or calibration failure; that is, conditions that reflect deteriorating performance of the component. These conditions include any condition where the device previously worked properly, then, due to changes within the device, malfunctioned or degraded to the point that re-calibration (to within the entity's tolerance) was required.

For this purpose of tracking hardware issues, human errors resulting in Protection System misoperations during system installation or maintenance activities are not considered countable events. Examples of excluded human errors include relay setting errors, design errors, wiring errors, inadvertent tripping of devices during testing or installation, and misapplication of Protection System components. Examples of misapplication of Protection System components include wrong CT or PT tap position, protective relay function misapplication, and components not specified correctly for their installation. Obviously, if one is setting up relevant data about hardware failures then human failures should be eliminated from the hardware performance analysis.

One example of human-error is not pertinent data might be in the area of testing "86" lock-out relays (LOR). "Entity A" has two types of LOR's type "X" and type "Y"; they want to move into a performance based maintenance interval. They have 1000 of each type, so the population variables are met. During electrical trip testing of all of their various schemes over the initial six-year interval they find zero type "X" failures, but human error led to tripping a BES element 100 times; they find 100 type "Y" failures and had an additional 100 human-error caused tripping incidents. In this example the human-error caused misoperations should not be used to judge the performance of either type of LOR. Analysis of the data might lead "Entity A" to change time intervals. Type "X" LOR can be placed into extended time interval testing because of its low failure rate (zero failures) while Type "Y" would have to be tested more often than every 6 calendar years (100 failures divided by 1000 units exceeds the 4% tolerance level).

Certain types of Protection System component errors that cause misoperations are not considered countable events. Examples of excluded component errors include device malfunctions that are correctable by firmware upgrades and design errors that do not impact protection function.

What are some examples of methods of correcting segment perfomance for Performance-Based Maintenance?

There are a number of methods that may be useful for correcting segment performance for mal-performing segments in a Performance-Based Maintenance system. Some examples are listed below.

- The maximum allowable interval, as established by the Performance-Based Maintenance system, can be decreased. This may, however, be slow to correct the performance of the segment.
- Identifiable sub-groups of components within the established segment, which have been identified to be the mal-performing portion of the segment, can be broken out as an independent segment for target action. Each resulting segment must satisfy the minimum population requirements for a Performance-Based Maintenance program in order to remain within the program.
- Targeted corrective actions can be taken to correct frequently occurring problems. An example would be replacement of capacitors within electromechanical distance relays if bad capacitors were determined to be the cause of the mal-performance.
- Components within the mal-performing segment can be replaced with other components (electromechanical distance relays with microprocessor relays, for example) to remove the mal-performing segment.

If I find (and correct) a maintenance-correctable issue as a result of a misoperation investigation (Re: PRC-004), how does this affect my Performance-Based Maintenance program?

If you perform maintenance on a Protection System component for any reason (including as part of a PRC-004 required misoperation investigation/corrective action), the actions performed can count as a maintenance activity provided the activities in the relevant Tables have been done, and, if you desire, "reset the clock" on everything you've done. In a Performance-Based Maintenance program, you also need to record the maintenance-correctable issue as a countable event within the relevant component group segment and use it in the analysis to determine your correct Performance-Based Maintenance interval for that component group. Note that "resetting the clock" should not be construed as interfering with an entity's routine testing schedule because the "clock-reset" would actually make for a decreased time interval by the time the next routine test schedule comes around.

For example a relay scheme, consisting of 4 relays, is tested on 1-1-11 and the PSMP has a time interval of 3 calendar years with an allowable extension of 1 calendar year. The relay would be due again for routine testing before the end of the year 2015. This mythical relay scheme has a misoperation on 6-1-12 that points to one of the four relays as bad. Investigation proves a bad relay and a new one is tested and installed in place of the original. This replacement relay actually could be retested before the end of the year 2016 (clock-reset) and not be out of compliance. This requires tracking maintenance by individual relays and is allowed. However, many companies schedule maintenance in other ways like by substation or by circuit breaker or by relay scheme. By these methods of tracking maintenance that "replaced relay" will be retested before the end of the year 2015. This is also acceptable. In no case was a particular

relay tested beyond the PSMP of 4 years max, nor was the 6 year max of the Standard exceeded. The entity can reset the clock if they desire or the entity can continue with original schedules and, in effect, test even more frequently.

Why are batteries excluded from PBM? What about exclusion of batteries from condition based maintenance?

Batteries are the only element of a Protection System that is a perishable item with a shelf life. As a perishable item batteries require not only a constant float charge to maintain their freshness (charge), but periodic inspection to determine if there are problems associated with their aging process and testing to see if they are maintaining a charge or can still deliver their rated output as required.

Besides being perishable, a second unique feature of a battery that is unlike any other Protection System element is that a battery uses chemicals, metal alloys, plastics, welds, and bonds that must interact with each other to produce the constant dc source required for Protection Systems, undisturbed by ac system disturbances.

No type of battery manufactured today for Protection System application is free from problems that can only be detected over time by inspection and test. These problems can arise from variances in the manufacturing process, chemicals and alloys used in the construction of the individual cells, quality of welds and bonds to connect the components, the plastics used to make batteries and the cell forming process for the individual battery cells.

Other problems that require periodic inspection and testing can result from transportation from the factory to the job site, length of time before a charge is put on the battery, the method of installation, the voltage level and duration of equalize charges, the float voltage level used, and the environment that the battery is installed in.

All of the above mentioned factors and several more not discussed here are beyond the control of the Functional Entities that want to use a Performance-Based Protection System Maintenance (PBM) program. These inherent variances in the aging process of a battery cell make establishment of a designated segment based on manufacturer and type of battery impossible.

The whole point of PBM is that if all variables are isolated then common aging and performance criteria would be the same. However, there are too many variables in the electrochemical process to completely isolate all of the performance-changing criteria.

Similarly, Functional Entities that want to establish a condition-based maintenance program using the highest levels of monitoring, resulting in the least amount of hands-on maintenance activity, cannot completely eliminate some periodic maintenance of the battery used in a station dc supply. Inspection of the battery is required on a Maximum Maintenance Interval listed in the tables due to the aging processes of station batteries. However, higher degrees of monitoring of a battery can eliminate the requirement for some periodic testing and some inspections (see Table 1-4).

Please provide an example of the calculations involved in extending maintenance time intervals using PBM.

Entity has 1000 GE-HEA lock-out relays; this is greater than the minimum sample requirement of 60.

They start out testing all of the relays within the prescribed Table requirements (6 year max) by testing the relays every 5 years. The entity's plan is to test 200 units per year; this is greater than the minimum sample size requirement of 30.

For the sake of example only the following will show 6 failures per year, reality may well have different numbers of failures every year. PBM requires annual assessment of failures found per units tested.

After the first year of tests the entity finds 6 failures in the 200 units tested. 6/200= 3% failure rate.

This entity is now allowed to extend the maintenance interval if they choose.

The entity chooses to extend the maintenance interval of this population segment out to 10 years.

This represents a rate of 100 units tested per year; entity selects 100 units to be tested in the following year.

After that year of testing these 100 units the entity again finds 6 failed units. 6/100= 6% failures.

This entity has now exceeded the acceptable failure rate for these devices and must accelerate testing of all of the units at a higher rate such that the failure rate is found to be less than 4% per year; the entity has three years to get this failure rate down to 4% or less (per year).

In response to the 6% failure rate, the entity decreases the testing interval to 8 years. This means that they will now test 125 units per year (1000/8). The entity has just two years left to get the test rate corrected.

After a year they again find 6 failures out of the 125 units tested. 6/125= 5% failures.

In response to the 5% failure rate, the entity decreases the testing interval to 7 years. This means that they will now test 143 units per year (1000/7). The entity has just one year left to get the test rate corrected.

After a year they again find 6 failures out of the 143 units tested. 6/143= 4.2% failures.

(Note that the entity has tried 5 years and they were under the 4% limit and they tried 7 years and they were over the 4% limit. They must be back at 4% failures or less in the next year so they might simply elect to go back to 5 years.)

Instead, in response to the 5% failure rate, the entity decreases the testing interval to 6 years. This means that they will now test 167 units per year (1000/6).

After a year they again find 6 failures out of the 167 units tested. 6/167= 3.6% failures.

Entity found that they could maintain the failure rate at no more than 4% failures by maintaining the testing interval at 6 years or less. Entity chose 6 year interval and effectively extended their TBM (5 years) program by 20%.

A note of practicality is that an entity will probably be in better shape to lengthen the intervals between tests if the failure rate is less than 2%. But the requirements allow for annual adjustments if the entity desires. As a matter of maintenance management, an ever-changing test rate (units tested / year) may be un-workable.

Note that the "5% of components" requirement effectively sets a practical limit of 20 year maximum PBM interval. Also of note is the "3 years" requirement; an entity might arbitrarily extend time intervals from 6 years to 20 years. In the event that an entity finds a failure rate greater than 4% then the test rate must be accelerated such that within three years the failure rate must be brought back down to 4% or less.

Here is a table that demonstrates the values discussed:

Year #	Total Population (P)	Test Interval (I)	Units to be Tested (U= P/I)	# of Failures Found (F)	Failure Rate (=F/U)	Decision to Change Interval Yes or No	Interval Chosen
1	1000	5 yrs	200	6	3%	Yes	10 yrs
2	1000	10 yrs	100	6	6%	Yes	8 yrs
3	1000	8 yrs	125	6	5%	Yes	7 yrs
4	1000	7 yrs	143	6	4.2%	Yes	6 yrs
5	1000	6 yrs	167	6	3.6%	No	6 yrs

Please provide an example of the calculations involved in extending maintenance time intervals using PBM for control circuitry.

Note that the following example captures "Control Circuitry" as all of the trip paths associated with a particular trip coil of a circuit breaker. An entity is not restricted to this method of counting control circuits. Perhaps another method an entity would prefer would be to simply track every individual (parallel) trip path. Or perhaps another method would be to track all of the trip outputs from a specific (set) of relays protecting a specific element. Under the included definition of "Component":

The designation of what constitutes a control circuit component is very dependent upon how an entity performs and tracks the testing of the control circuitry. Some entities test their control circuits on a breaker basis whereas others test their circuitry on a local zone of protection basis. Thus, entities are allowed the latitude to designate their own definitions of control circuit components. Another example of where the entity has some discretion on determining what constitutes a single component is the voltage and current sensing devices, where the entity may choose either to designate a full three-phase set of such devices or a single device as a single component.

And in Attachment A (PBM) the definition of Segment:

Segment – *Protection Systems or components of a consistent design standard, or a particular model or type from a single manufacturer that typically share other common elements. Consistent performance is expected across the entire population of a segment. A segment must contain at least sixty (60) individual components.*

Example:

Entity has 1000 circuit breakers, all of which have two trip coils for a total of 2000 trip coils; if all circuitry was designed and built with a consistent (internal entity) standard then this is greater than the minimum sample requirement of 60.

For the sake of further example the following facts are given:

Half of all relay panels (500) were built 40 years ago by an outside contractor, consisted of asbestos wrapped 600V-insulation panel wiring and the cables exiting the control house are THHN pulled in conduit direct to exactly half of all of the various circuit breakers. All of the relay panels and cable pulls were built with consistent standards and consistent performance standard expectations within the segment (which is greater than 60). Each relay panel has redundant microprocessor (MPC) relays (retrofitted); each MPC relay supplies an individual trip output to each of the two trip coils of the assigned circuit breaker.

Approximately 35 years ago the entity developed their own internal construction crew and now builds all of their own relay panels from parts supplied from vendors that meet the entity's specifications, including SIS 600V insulation wiring and copper-sheathed cabling within the direct conduits to circuit breakers. The construction crew uses consistent standards in the construction. This newer segment of their Control Circuitry population is different than the original segment, consistent (standards, construction and performance expectations) within the new segment and constitutes the remainder of the entity's population, (another 500 panels and the cabling to the remaining 500 circuit breakers). Each relay panel has redundant microprocessor (MPC) relays; each MPC relay supplies an individual trip output to each of the

two trip coils of the assigned circuit breaker. Every trip path in this newer segment has a device that monitors the voltage directly across the trip contacts of the MPC relays and alarms via RTU and SCADA to the Operations Control room. This monitoring device, when not in alarm, demonstrates continuity all the way through the trip coil, cabling and wiring back to the trip contacts of the MPC relay.

The entity is tracking 2000 trip coils (each consisting of multiple trip paths) in each of these two segments. But half of all of the trip paths are monitored, therefore the trip paths are continuously tested and the circuit will alarm when there is a failure; these alarms have to be verified every 12 years for correct operation.

The entity now has 1000 trip coils (and associated trip paths) remaining that they have elected to count as control circuits. The entity has instituted a process that requires the verification of every trip path to each trip coil (one unit), including the electrical activation of the trip coil. (The entity notes that the trip coils will have to be tripped electrically more often than the trip path verification and is taking care of this activity through other documentation of real-time fault operations.)

They start out testing all of the trip coil circuits within the prescribed Table requirements (12 year max) by testing the trip circuits every 10 years. The entity's plan is to test 100 units per year; this is greater than the minimum sample size requirement of 30.

For the sake of example only the following will show 3 failures per year, reality may well have different numbers of failures every year. PBM requires annual assessment of failures found per units tested.

After the first year of tests the entity finds 3 failures in the 100 units tested. 3/100= 3% failure rate.

This entity is now allowed to extend the maintenance interval if they choose.

The entity chooses to extend the maintenance interval of this population segment out to 20 years.

This represents a rate of 50 units tested per year; entity selects 50 units to be tested in the following year.

After that year of testing these 50 units the entity again finds 3 failed units. 3/50= 6% failures.

This entity has now exceeded the acceptable failure rate for these devices and must accelerate testing of all of the units at a higher rate such that the failure rate is found to be less than 4% per year; the entity has three years to get this failure rate down to 4% or less (per year).

In response to the 6% failure rate, the entity decreases the testing interval to 16 years. This means that they will now test 63 units per year (1000/16). The entity has just two years left to get the test rate corrected.

After a year they again find 3 failures out of the 63 units tested. 3/63= 4.76% failures.

In response to the >4% failure rate, the entity decreases the testing interval to 14 years. This means that they will now test 72 units per year (1000/14). The entity has just one year left to get the test rate corrected.

After a year they again find 3 failures out of the 72 units tested. 3/72= 4.2% failures.

(Note that the entity has tried 10 years and they were under the 4% limit and they tried 14 years and they were over the 4% limit. They must be back at 4% failures or less in the next year so they might simply elect to go back to 10 years.)

Instead, in response to the 4.2% failure rate, the entity decreases the testing interval to 12 years. This means that they will now test 84 units per year (1000/12).

After a year they again find 3 failures out of the 84 units tested. 3/84= 3.6% failures.

Entity found that they could maintain the failure rate at no more than 4% failures by maintaining the testing interval at 12 years or less. Entity chose 12 year interval and effectively extended their TBM (10 years) program by 20%.

A note of practicality is that an entity will probably be in better shape to lengthen the intervals between tests if the failure rate is less than 2%. But the requirements allow for annual adjustments if the entity desires. As a matter of maintenance management, an ever-changing test rate (units tested / year) may be un-workable.

Note that the "5% of components" requirement effectively sets a practical limit of 20 year maximum PBM interval. Also of note is the "3 years" requirement; an entity might arbitrarily extend time intervals from 6 years to 20 years. In the event that an entity finds a failure rate greater than 4% then the test rate must be accelerated such that within three years the failure rate must be brought back down to 4% or less.

Here is a table that demonstrates the values discussed:

Year #	Total Population (P)	Test Interval (I)	Units to be Tested (U= P/I)	# of Failures Found (F)	Failure Rate (=F/U)	Decision to Change Interval Yes or No	Interval Chosen
1	1000	10 yrs	100	3	3%	Yes	20 yrs
2	1000	20 yrs	50	3	6%	Yes	16yrs
3	1000	16 yrs	63	3	4.8%	Yes	14 yrs
4	1000	14 yrs	72	3	4.2%	Yes	12 yrs
5	1000	12 yrs	84	3	3.6%	No	12 yrs

Please provide an example of the calculations involved in extending maintenance time intervals using PBM for voltage and current sensing devices.

Note that the following example captures "voltage and current inputs to the protective relays" as all of the various current transformer and potential transformer signals associated with a particular set of relays used for protection of a specific element. This entity calls this set of protective relays a "Relay Scheme". Thus this entity chooses to count PT and CT signals as a group instead of individually tracking maintenance activities to specific bushing CT's or specific PT's. An entity is not restricted to this method of counting voltage and current devices, signals and paths. Perhaps another method an entity would prefer would be to simply track every individual PT and CT. Note that a generation maintenance group may well select the latter because they may elect to perform routine off-line tests during generator outages whereas a transmission maintenance group might create a process that utilizes real-time system values measured at the relays. Under the included definition of "Component":

The designation of what constitutes a control circuit component is very dependent upon how an entity performs and tracks the testing of the control circuitry. Some entities test their control circuits on a breaker basis whereas others test their circuitry on a local zone of protection basis. Thus, entities are allowed the latitude to designate their own definitions of control circuit components. Another example of where the entity has some discretion on determining what constitutes a single component is the voltage and current sensing devices, where the entity may choose either to designate a full three-phase set of such devices or a single device as a single component.

And in Attachment A (PBM) the definition of Segment:

Segment – *Protection Systems or components of a consistent design standard, or a particular model or type from a single manufacturer that typically share other common elements. Consistent performance is expected across the entire population of a segment. A segment must contain at least sixty (60) individual components.*

Example:

Entity has 2000 "Relay Schemes", all of which have three current signals supplied from bushing CT's and three voltage signals supplied from substation bus PT's. All cabling and circuitry was designed and built with a consistent (internal entity) standard and this population is greater than the minimum sample requirement of 60.

For the sake of further example the following facts are given:

Half of all relay schemes (1000) are supplied with current signals from ANSI STD C800 bushing CT's and voltage signals from PT's built by ACME Electric MFR CO. All of the relay panels and cable pulls were built with consistent standards and consistent performance standard expectations exist for the consistent wiring, cabling and instrument transformers within the segment (which is greater than 60).

The other half of the entity's relay schemes have MPC relays with additional monitoring built-in that compare DNP values of voltages and currents (or Watts and VARs) as interpreted by the MPC relays and alarm for an entity-accepted tolerance level of accuracy. This newer segment of their "Voltage and Current Sensing" population is different than the original segment,

consistent (standards, construction and performance expectations) within the new segment and constitutes the remainder of the entity's population.

The entity is tracking many thousands of voltage and current signals within 2000 relay schemes (each consisting of multiple voltage and current signals) in each of these two segments. But half of all of the relay schemes voltage and current signals are monitored, therefore the voltage and current signals are continuously tested and the circuit will alarm when there is a failure; these alarms have to be verified every 12 years for correct operation.

The entity now has 1000 relay schemes worth of voltage and current signals remaining that they have elected to count within their relay schemes designation. The entity has instituted a process that requires the verification of these voltage and current signals within each relay scheme (one unit).

(Please note - a problem discovered with a current or voltage signal found at the relay could be caused by anything from the relay all the way to the signal source itself. Having many sources of problems can easily increase failure rates beyond the rate of failures of just one item (for example just PT's). It is the intent of the SDT to minimize failure rates of all of the equipment to an acceptable level thus any failure of any item that gets the signal from source to relay is counted. It is for this reason that the SDT chose to set the boundary at the ability of the signal to be delivered all the way to the relay.)

The entity will start out measuring all of the relay scheme voltage and currents at the individual relays within the prescribed Table requirements (12 year max) by measuring the voltage and current values every 10 years. The entity's plan is to test 100 units per year; this is greater than the minimum sample size requirement of 30.

For the sake of example only the following will show 3 failures per year, reality may well have different numbers of failures every year. PBM requires annual assessment of failures found per units tested.

After the first year of tests the entity finds 3 failures in the 100 units tested. 3/100= 3% failure rate.

This entity is now allowed to extend the maintenance interval if they choose.

The entity chooses to extend the maintenance interval of this population segment out to 20 years.

This represents a rate of 50 units tested per year; entity selects 50 units to be tested in the following year.

After that year of testing these 50 units the entity again finds 3 failed units. 3/50= 6% failures.

This entity has now exceeded the acceptable failure rate for these devices and must accelerate testing of all of the units at a higher rate such that the failure rate is found to be less than 4% per year; the entity has three years to get this failure rate down to 4% or less (per year).

In response to the 6% failure rate, the entity decreases the testing interval to 16 years. This means that they will now test 63 units per year (1000/16). The entity has just two years left to get the test rate corrected.

After a year they again find 3 failures out of the 63 units tested. 3/63= 4.76% failures.

In response to the >4% failure rate, the entity decreases the testing interval to 14 years. This means that they will now test 72 units per year (1000/14). The entity has just one year left to get the test rate corrected.

After a year they again find 3 failures out of the 72 units tested. 3/72= 4.2% failures.

(Note that the entity has tried 10 years and they were under the 4% limit and they tried 14 years and they were over the 4% limit. They must be back at 4% failures or less in the next year so they might simply elect to go back to 10 years.)

Instead, in response to the 4.2% failure rate, the entity decreases the testing interval to 12 years. This means that they will now test 84 units per year (1000/12).

After a year they again find 3 failures out of the 84 units tested. 3/84= 3.6% failures.

Entity found that they could maintain the failure rate at no more than 4% failures by maintaining the testing interval at 12 years or less. Entity chose 12 year interval and effectively extended their TBM (10 years) program by 20%.

A note of practicality is that an entity will probably be in better shape to lengthen the intervals between tests if the failure rate is less than 2%. But the requirements allow for annual adjustments if the entity desires. As a matter of maintenance management, an ever-changing test rate (units tested / year) may be un-workable.

Note that the "5% of components" requirement effectively sets a practical limit of 20 year maximum PBM interval. Also of note is the "3 years" requirement; an entity might arbitrarily extend time intervals from 6 years to 20 years. In the event that an entity finds a failure rate greater than 4% then the test rate must be accelerated such that within three years the failure rate must be brought back down to 4% or less.

Here is a table that demonstrates the values discussed:

Year #	Total Population (P)	Test Interval (I)	Units to be Tested (U= P/I)	# of Failures Found (F)	Failure Rate (=F/U)	Decision to Change Interval Yes or No	Interval Chose
1	1000	10 yrs	100	3	3%	Yes	20 yrs
2	1000	20 yrs	50	3	6%	Yes	16yrs
3	1000	16 yrs	63	3	4.8%	Yes	14 yrs
4	1000	14 yrs	72	3	4.2%	Yes	12 yrs
5	1000	12 yrs	84	3	3.6%	No	12 yrs

10. Overlapping the Verification of Sections of the Protection System

Tables 1-1 through 1-5 require that every Protection System component be periodically verified. One approach, but not the only method, is to test the entire protection scheme as a unit, from the secondary windings of voltage and current sources to breaker tripping. For practical ongoing verification, sections of the Protection System may be tested or monitored individually. The boundaries of the verified sections must overlap to ensure that there are no gaps in the verification. See Appendix A of this Supplementary Reference for additional discussion on this topic.

All of the methodologies expressed within this report may be combined by an entity, as appropriate, to establish and operate a maintenance program. For example, a Protection System may be divided into multiple overlapping sections with a different maintenance methodology for each section:

- Time-based maintenance with appropriate maximum verification intervals for categories of equipment as given in the Tables 1-1 through 1-5;
- Monitoring as described in Tables 1-1 through 1-5;
- A Performance-Based Maintenance program as described in Section 9 above or Attachment A of the Standard;
- Opportunistic verification using analysis of fault records as described in Section 11

10.1 Frequently Asked Question:

My system has alarms that are gathered once daily through an auto-polling system; this is not really a conventional SCADA system but does it meet the Table 1 requirements for inclusion as a monitored system?

Yes, provided the auto-polling that gathers the alarms reports those alarms to a location where the action can be initiated to correct the issue. This location does not have to be the location of the engineer or the technician that will eventually repair the problem, but rather a location where the action can be initiated.

11. Monitoring by Analysis of Fault Records

Many users of microprocessor relays retrieve fault event records and oscillographic records by data communications after a fault. They analyze the data closely if there has been an apparent misoperation, as NERC Standards require. Some advanced users have commissioned automatic fault record processing systems that gather and archive the data. They search for evidence of component failures or setting problems hidden behind an operation whose overall outcome seems to be correct. The relay data may be augmented with independently captured digital fault recorder (DFR) data retrieved for the same event.

Fault data analysis comprises a legitimate CBM program that is capable of reducing the need for a manual time-interval based check on Protection Systems whose operations are analyzed. Even electromechanical Protection Systems instrumented with DFR channels may achieve some CBM benefit. The completeness of the verification then depends on the number and variety of faults in the vicinity of the relay that produce relay response records, and the specific data captured.

A typical fault record will verify particular parts of certain Protection Systems in the vicinity of the fault. For a given Protection System installation, it may or may not be possible to gather within a reasonable amount of time an ensemble of internal and external fault records that completely verify the Protection System.

For example, fault records may verify that the particular relays that tripped are able to trip via the control circuit path that was specifically used to clear that fault. A relay or DFR record may indicate correct operation of the protection communications channel. Furthermore, other nearby Protection Systems may verify that they restrain from tripping for a fault just outside their respective zones of protection. The ensemble of internal fault and nearby external fault event data can verify major portions of the Protection System, and reset the time clock for the Table 1 testing intervals for the verified components only.

What can be shown from the records of one operation is very specific and limited. In a panel with multiple relays, only the specific relay(s) whose operation can be observed without ambiguity should be used. Be careful about using fault response data to verify that settings or calibration are correct. Unless records have been captured for multiple faults close to either side of a setting boundary, setting or calibration could still be incorrect.

PMU data, much like DME data, can be utilized to prove various components of the Protection System. Obviously, care must be taken to attribute proof only to the parts of a Protection System that can actually be proven using the PMU or DME data.

If fault record data is used to show that portions or all of a Protection System have been verified to meet Table 1 requirements, the owner must retain the fault records used, and the maintenance related conclusions drawn from this data and used to defer Table 1 tests, for at least the retention time interval given in Section 8.2.

11.1 Frequently Asked Question:

I use my protective relays for fault and disturbance recording, collecting oscillographic records and event records via communications for fault analysis to meet NERC and DME requirements. What are the maintenance requirements for the relays?

For relays used only as disturbance monitoring equipment, the NERC Standard PRC-018-1 R3 & R6 states the maintenance requirements, and is being addressed by a Standards activity that is revising PRC-002-1 and PRC-018-1. For protective relays "that are designed to provide protection for the BES," this Standard applies, even if they also perform DME functions.

12. Importance of Relay Settings in Maintenance Programs

In manual testing programs, many utilities depend on pickup value or zone boundary tests to show that the relays have correct settings and calibration. Microprocessor relays, by contrast, provide the means for continuously monitoring measurement accuracy. Furthermore, the relay digitizes inputs from one set of signals to perform all measurement functions in a single self-monitoring microprocessor system. These relays do not require testing or calibration of each setting.

However, incorrect settings may be a bigger risk with microprocessor relays than with older relays. Some microprocessor relays have hundreds or thousands of settings, many of which are critical to Protection System performance.

Monitoring does not check measuring element settings. Analysis of fault records may or may not reveal setting problems. To minimize risk of setting errors after commissioning, the user should enforce strict settings data base management, with reconfirmation (manual or automatic) that the installed settings are correct whenever maintenance activity might have changed them. For background and guidance, see [5] in References.

Table 1 requires that settings must be verified to be as specified. The reason for this requirement is simple. With legacy relays (non-microprocessor protective relays) it is necessary to know the value of the intended setting in order to test, adjust and calibrate the relay. Proving that the relay works per specified setting was the de facto procedure. However, with the advanced microprocessor relays it is possible to change relay settings for the purpose of verifying specific functions and then neglect to return the settings to the specified values. While there is no specific requirement to maintain a settings management process there remains a need to verify that the settings left in the relay are the intended, specified settings. This need may manifest itself after any of the following:

- One or more settings are changed for any reason.
- A relay fails and is repaired or replaced with another unit.
- A relay is upgraded with a new firmware version.

12.1 Frequently Asked Questions:

How do I approach testing when I have to upgrade firmware of a microprocessor relay?

The entity should ensure that the relay continues to function properly after implementation of firmware changes. Some entities may have a R&D department that might routinely run acceptance tests on devices with firmware upgrades before allowing the upgrade to be installed. Other entities may rely upon the vigorous testing of the firmware OEM. An entity has the latitude to install devices and/or programming that they believe will perform to their satisfaction. If an entity should choose to perform the maintenance activities specified in the Tables following a firmware upgrade then they may, if they choose, reset the time clock on that

set of maintenance activities so that they would not have to repeat the maintenance on its regularly scheduled cycle. (However, for simplicity in maintenance schedules, some entities may choose to not reset this time clock; it is merely a suggested option.)

If I upgrade my old relays then do I have to maintain my previous equipment maintenance documentation?

If an equipment item is repaired or replaced then the entity can restart the maintenance-activity-time-interval-clock if desired, however the replacement of equipment does not remove any documentation requirements. The requirements in the Standard are intended to ensure that an entity has a maintenance plan and that the entity adheres to minimum activities and maximum time intervals. The documentation requirements are intended to help an entity demonstrate compliance. For example, saving the dates and records of the last two maintenance activities is intended to demonstrate compliance with the interval. Therefore, if you upgrade or replace equipment then you still must maintain the documentation for the previous equipment, thus demonstrating compliance with the time interval requirement prior to the replacement action.

We have a number of installations where we have changed our Protection System components. Some of the changes were upgrades, but others were simply system rating changes that merely required taking relays "out-of-service". What are our responsibilities when it comes to "out-of-service" devices?

Assuming that your system up-rates, upgrades and overall changes meet any and all other requirements and standards then the requirements of PRC-005-2 are simple – if the Protection System component performs a Protection System function then it must be maintained. If the component no longer performs Protection System functions then it does not require maintenance activities under the Tables of PRC-005-2. While many entities might physically remove a component that is no longer needed there is no requirement in PRC-005-2 to remove such component(s). Obviously, prudence would dictate that an "out-of-service" device is truly made inactive. There are no record requirements listed in PRC-005-2 for Protection System components not used.

While performing relay testing of a protective device on our Bulk Electric System it was discovered that the protective device being tested was either broken or out of calibration. Does this satisfy the relay testing requirement even though the protective device tested bad, and may be unable to be placed back into service?

Yes, PRC-005-2 requires entities to perform relay testing on protective devices on a given maintenance cycle interval. By performing this testing, the entity has satisfied PRC-005-2 requirement although the protective device may be unable to be returned to service under normal calibration adjustments. R5 states

R5. Each Transmission Owner, Generator Owner, and Distribution Provider shall demonstrate efforts to correct any identified unresolved maintenance issues.

Also, when a failure occurs in a Protection System, power system security may be comprised, and notification of the failure must be conducted in accordance with relevant NERC Standards.

If I show the protective device out of service while it is being repaired then can I add it back as a new protective device when it returns? If not, my relay testing history would show that I was out of compliance for the last maintenance cycle.

The maintenance and testing requirements (R5) state "…shall demonstrate efforts to correct any identified unresolved maintenance issues..." The type of corrective activity is not stated; however it could include repairs or replacements.

Your documentation requirements will increase, of course, to demonstrate that your device tested bad and had corrective actions initiated. Your regional entity might ask about the status of your corrective actions.

13. Self-Monitoring Capabilities and Limitations

Microprocessor relay proponents have cited the self-monitoring capabilities of these products for nearly 20 years. Theoretically, any element that is monitored does not need a periodic manual test. A problem today is that the community of manufacturers and users has not created clear documentation of exactly what is and is not monitored. Some unmonitored but critical elements are buried in installed systems that are described as self-monitoring.

To utilize the extended time intervals allowed by monitoring the user must document that the monitoring attributes of the device match the minimum requirements listed in the Table 1.

Until users are able to document how all parts of a system which are required for the protective functions are monitored or verified (with help from manufacturers), they must continue with the unmonitored intervals established in Table 1 and Table 3.

Going forward, manufacturers and users can develop mappings of the monitoring within relays, and monitoring coverage by the relay of user circuits connected to the relay terminals.

To enable the use of the most extensive monitoring (and never again have a hands-on maintenance requirement), the manufacturers of the microprocessor-based self-monitoring components in the Protection System should publish for the user a document or map that shows:

- How all internal elements of the product are monitored for any failure that could impact Protection System performance.
- Which connected circuits are monitored by checks implemented within the product; how to connect and set the product to assure monitoring of these connected circuits; and what circuits or potential problems are not monitored.

With this information in hand, the user can document monitoring for some or all sections by:

- Presenting or referencing the product manufacturer's documents.
- Explaining in a system design document the mapping of how every component and circuit that is critical to protection is monitored by the microprocessor product(s) or by other design features.
- Extending the monitoring to include the alarm transmission facilities through which failures are reported within a given time frame to allocate where action can be taken to initiate resolution of the alarm attributed to an unresolved maintenance issue, so that failures of monitoring or alarming systems also lead to alarms and action.
- Documenting the plans for verification of any unmonitored components according to the requirements of Table 1 and Table 3.

13.1 Frequently Asked Question:

I can't figure out how to demonstrate compliance with the requirements for the highest level of monitoring of Protection Systems. Why does this Maintenance Standard describe a maintenance program approach I cannot achieve?

Demonstrating compliance with the requirements for the highest level of monitoring any particular component of Protection Systems is likely to be very involved, and may include detailed manufacturer documentation of complete internal monitoring within a device, comprehensive design drawing reviews, and other detailed documentation. This Standard does not presume to specify what documentation must be developed; only that it must be documented.

There may actually be some equipment available that is capable of meeting these highest levels of monitoring criteria, in which case it may be maintained according to the highest level of monitoring shown on the Tables. However, even if there is no equipment available today that can meet this level of monitoring; the Standard establishes the necessary requirements for when such equipment becomes available.

By creating a roadmap for development, this provision makes the Standard technology-neutral. The Standard Drafting Team wants to avoid the need to revise the Standard in a few years to accommodate technology advances that may be coming to the industry.

14. Notification of Protection System Failures

When a failure occurs in a Protection System, power system security may be compromised, and notification of the failure must be conducted in accordance with relevant NERC Standard(s). Knowledge of the failure may impact the system operator's decisions on acceptable loading conditions.

This formal reporting of the failure and repair status to the system operator by the Protection System owner also encourages the system owner to execute repairs as rapidly as possible. In some cases, a microprocessor relay or carrier set can be replaced in hours; wiring termination failures may be repaired in a similar time frame. On the other hand, a component in an electromechanical or early-generation electronic relay may be difficult to find and may hold up repair for weeks. In some situations, the owner may have to resort to a temporary protection panel, or complete panel replacement.

15. Maintenance Activities

Some specific maintenance activities are a requirement to ensure reliability. An example would be that a BES entity could be prudent in its protective relay maintenance but if its battery maintenance program is lacking then reliability could still suffer. The NERC glossary outlines a Protection System as containing specific components. PRC-005-2 requires specific maintenance activities be accomplished within a specific time interval. As noted previously, higher technology equipment can contain integral monitoring capability that actually performs maintenance verification activities routinely and often; therefore *manual intervention* to perform certain activities on these type components may not be needed.

15.1 Protective Relays (Table 1-1)

These relays are defined as the devices that receive the input signal from the current and voltage sensing devices and are used to isolate a faulted element of the BES. Devices that sense thermal, vibration, seismic, pressure, gas or any other non-electrical inputs are excluded.

Non-microprocessor based equipment is treated differently than microprocessor based equipment in the following ways, the relays should meet the asset owners' tolerances.

- Non-microprocessor devices must be tested with voltage and/or current applied to the device.
- Microprocessor devices may be tested through the integral testing of the device.
    - There is no specific protective relay commissioning test or relay routine test mandated.
    - There is no specific documentation mandated.

15.1.1 Frequently Asked Question:

What calibration tolerance should be applied on electromechanical relays?

Each entity establishes their own acceptable tolerances when applying protective relaying on their system. For some Protection System components, adjustment is required to bring measurement accuracy within the parameters established by the asset owner based on the specific application of the component. A calibration failure is the result if testing finds the specified parameters to be out of tolerance.

15.2 Voltage & Current Sensing Devices (Table 1-3)

These are the current and voltage sensing devices, usually known as instrument transformers. There is presently a technology available (fiber-optic Hall-effect) that does not utilize conventional transformer technology; these devices and other technologies that produce quantities that represent the primary values of voltage and current are considered to be a type of voltage and current sensing devices included in this Standard.

The intent of the maintenance activity is to verify the input to the protective relay from the device that produces the current or voltage signal sample.

There is no specific test mandated for these components. The important thing about these signals is to know that the expected output from these components actually reaches the protective relay. Therefore, the proof of the proper operation of these components also demonstrates the integrity of the wiring (or other medium used to convey the signal) from the current and voltage sensing device all the way to the protective relay. The following observations apply.

- There is no specific ratio test, routine test or commissioning test mandated.
- There is no specific documentation mandated.
- It is required that the signal be present at the relay.
- This expectation can be arrived at from any of a number of means; (including but not limited to the following) by calculation, by comparison to other circuits, by commissioning tests, by thorough inspection, or by any means needed to verify the circuit meets the asset owner's Protection System maintenance program.
- An example of testing might be a saturation test of a CT with the test values applied at the relay panel; this therefore tests the CT as well as the wiring from the relay all the back to the CT.
- Another possible test is to measure the signal from the voltage and/or current sensing devices, during load conditions, at the input to the relay.
- Another example of testing the various voltage and/or current sensing devices is to query the microprocessor relay for the real-time loading; this can then be compared to other devices to verify the quantities applied to this relay. Since the input devices have supplied the proper values to the protective relay then the verification activity has been satisfied. Thus event reports (and oscillographs) can be used to verify that the voltage and current sensing devices are performing satisfactorily.
- Still another method is to measure total watts and vars around the entire bus; this should add up to zero watts and zero vars thus proving the voltage and/or current sensing devices system throughout the bus.
- Another method for proving the voltage and/or current sensing devices is to complete commissioning tests on all of the transformers, cabling, fuses and wiring.
- Any other method that verifies the input to the protective relay from the device that produces the current or voltage signal sample.

15.2.1 Frequently Asked Questions:

What is meant by "…verify the current and voltage circuit inputs from the voltage and current sensing devices to the protective relays …" Do we need to perform ratio, polarity and saturation tests every few years?

No. You must verify that the protective relay is receiving the expected values from the voltage and current sensing devices (typically voltage and current transformers). This can be as difficult as is proposed by the question (with additional testing on the cabling and substation wiring to ensure that the values arrive at the relays); or simplicity can be achieved by other verification methods. While some examples follow, these are not intended to represent an all-inclusive list; technology advances and ingenuity should not be excluded from making comparisons and verifications:

- Compare the secondary values, at the relay, to a metering circuit, fed by different current transformers, monitoring the same line as the questioned relay circuit.
- Compare the individual phase secondary values at the relay panel (with additional testing on the panel wiring to ensure that the values arrive at those relays) with the other phases, and verify that residual currents are within expected bounds
- Observe all three phase currents and the residual current at the relay panel with an oscilloscope, observing comparable magnitudes and proper phase relationship, with additional testing on the panel wiring to ensure that the values arrive at the relays.
- Compare the values, as determined by the questioned relay (such as, but not limited to, a query to the microprocessor relay), to another protective relay monitoring the same line, with currents supplied by different CT's.
- Compare the secondary values, at the relay with values measured by test instruments (such as, but not limited to multi-meters, voltmeter, clamp-on ammeters, etc) and verified by calculations and known ratios to be the values expected. For example a single PT on a 100KV bus will have a specific secondary value that when multiplied by the PT ratio arrives at the expected bus value of 100KV.
- Query SCADA for the power flows at the far end of the line protected by the questioned relay, compare those SCADA values to the values as determined by the questioned relay.
- Totalize the Watts and VARs on the bus and compare the totals to the values as seen by the questioned relay.

The point of the verification procedure is to ensure that all of the individual components are functioning properly; and that, an ongoing proactive procedure is in place to re-check the various components of the protective relay measuring systems.

Is wiring insulation or hi-pot testing required by this Maintenance Standard?

No, wiring insulation and equipment hi-pot testing are not specifically required by the Maintenance Standard. However, if the method of verifying CT and PT inputs to the relay involves some other method than actual observation of current and voltage transformer secondary inputs to the relay, it might be necessary to perform some sort of cable integrity test to verify that the instrument transformer secondary signals are actually making it to the relay and not being shunted off to ground. For instance, you could use CT excitation tests and PT turns ratio tests and compare to baseline values to verify that the instrument transformer outputs are acceptable. However, to conclude that these acceptable transformer instrument output signals are actually making it to the relay inputs, it also would be necessary to verify the insulation of the wiring between the instrument transformer and the relay.

My plant generator and transformer relays are electromechanical and do not have metering functions as do microprocessor based relays. In order for me to compare the instrument transformer inputs to these relays to the secondary values of other metered instrument transformers monitoring the same primary voltage and current signals, it would be necessary to temporarily connect test equipment like voltmeters and clamp on ammeters to measure the input signals to the relays. This practice seems very risky and a plant trip could result if the technician were to make an error while measuring these current and voltage signals. How can I avoid this risk? Also, what if no other instrument transformers are available which monitor the same primary voltage or current signal?

Comparing the input signals to the relays to the outputs of other independent instrument transformers monitoring the same primary current or voltage is just one method of verifying the instrument transformer inputs to the relays but is not required by the Standard. Plants can choose how to best manage their risk. If online testing is deemed too risky, offline tests such as, but not limited to, CT excitation test and PT turns ratio tests can be compared to baseline data and be used in conjunction with CT and PT secondary wiring insulation verification tests to adequately "verify the current and voltage circuit inputs from the voltage and current sensing devices to the protective relays …" while eliminating the risk of tripping an in service generator or transformer. Similarly, this same offline test methodology can be used to verify the relay input voltage and current signals to relays when there are no other instrument transformers monitoring available for purposes of signal comparison.

15.3 Control circuitry associated with protective functions (Table 1-5)

This component of Protection Systems includes the trip coil(s) of the circuit breaker, circuit switcher or any other interrupting device. It includes the wiring from the batteries to the relays. It includes the wiring (or other signal conveyance) from every trip output to every trip coil. It includes any device needed for the correct processing of the needed trip signal to the trip coil of the interrupting device; this requirement is meant to capture inputs and outputs to and from a protective relay that are necessary for the correct operation of the protective functions. In short, every trip path must be verified; the method of verification is optional to the asset owner. An example of testing methods to accomplish this might be to verify, with a volt-meter, the existence of the proper voltage at the open contacts, the open circuited input circuit and at the trip coil(s). As every parallel trip path has similar failure modes, each trip path from relay to

trip coil must be verified. Each trip coil must be tested to trip the circuit breaker (or other interrupting device) at least once. There is a requirement to operate the circuit breaker (or other interrupting device) at least once every six years as part of the complete functional test. If a suitable monitoring system is installed that verifies every parallel trip path then the manual-intervention testing of those parallel trip paths can be eliminated, however the actual operation of the circuit breaker must still occur at least once every six years. This 6-year tripping requirement can be completed as easily as tracking the real-time fault-clearing operations on the circuit breaker or tracking the trip coil(s) operation(s) during circuit breaker routine maintenance actions.

The circuit-interrupting device should not be confused with a motor-operated disconnect. The intent of this Standard is to require maintenance intervals and activities on Protection Systems equipment and not just all system isolating equipment.

It is necessary, however, to classify a device that actuates a high-speed auto-closing ground switch as an interrupting device if this ground switch is utilized in a Protection System and forces a ground fault to occur that then results in an expected Protection System operation to clear the forced ground fault. The SDT believes that this is essentially a transferred-tripping device without the use of communications equipment. If this high-speed ground switch is "…designed to provide protection for the BES…" then this device needs to be treated as any other Protection System component. The control circuitry would have to be tested within 12 years and any electromechanically operated device will have to be tested every 6 years. If the spring-operated ground switch can be disconnected from the solenoid triggering unit then the solenoid triggering unit can easily be tested without the actual closing of the ground blade.

The dc control circuitry also includes each auxiliary tripping relay (94) and each lock-out relay (86) that may exist in any particular trip scheme. If the lock-out relays (86) are electromechanical type components then they must be trip tested. The PSMT SDT considers these components to share some similarities in failure modes as electromechanical protective relays; as such there is a six year maximum interval between mandated maintenance tasks unless PBM is applied.

Contacts of the 86 or 94 that pass the trip current on to the circuit interrupting device trip coils will have to be checked as part of the 12 year requirement. Normally-open contacts that are not used to pass a trip signal and normally-closed contacts do not have to be verified. Verification of the tripping paths is the requirement.

While relays that do not respond to electrical quantities are presently excluded from this standard, their control circuits are included if the relay is installed to detect faults on BES Elements. Thus, the control circuit of a BES transformer sudden pressure relay should be verified every 12 years assuming its integrity is not monitored. While a sudden pressure relay control circuit is included within the scope of PRC-005-2, other alarming relay control circuits, i.e. SF-6 low gas, are not included even though they may trip the breaker being monitored.

New technology is also accommodated here; there are some tripping systems that have replaced the traditional hard-wired trip circuitry with other methods of trip-signal conveyance such as fiber-optics. It is the intent of the PSMT SDT to include this, and any other, technology

that is used to convey a trip signal from a protective relay to a circuit breaker (or other interrupting device) within this category of equipment. The requirement for these systems is verification of the tripping path.

Monitoring of the control circuit integrity allows for no maintenance activity on the control circuit (excluding the requirement to operate trip coils and electromechanical lockout and/or tripping auxiliary relays). Monitoring of integrity means to monitor for continuity and/or presence of voltage on each trip path. For Ethernet or fiber-optic control systems, monitoring of integrity means to monitor communication ability between the relay and the circuit breaker.

The trip path from a sudden pressure device is a part of the Protection System control circuitry. The sensing element is omitted from PRC-005-2 testing requirements because the SDT is unaware of industry recognized testing protocol for the sensing elements. The SDT believes that Protection Systems that trip (or can trip) the BES should be included. This position is consistent with the currently-approved PRC-005-1, consistent with the SAR for Project 2007-17, and understands this to be consistent with the position of FERC staff.

15.3.1 Frequently Asked Questions:

Is it permissible to verify circuit breaker tripping at a different time (and interval) than when we verify the protective relays and the instrument transformers?

Yes, provided the entire Protective System is tested within the individual components' maximum allowable testing intervals.

The Protection System Maintenance Standard describes requirements for verifying the tripping of circuit breakers. What is this telling me about maintenance of circuit breakers?

Requirements in PRC-005-2 are intended to verify the integrity of tripping circuits, including the breaker trip coil, as well as the presence of auxiliary supply (usually a battery) for energizing the trip coil if a protection function operates. Beyond this, PRC-005-2 sets no requirements for verifying circuit breaker performance, or for maintenance of the circuit breaker.

How do I test each dc Control Circuit trip path, as established in Table 1-5 "Protection System Control Circuitry (Trip coils and auxiliary relays)"?

Table 1-5 specifies that each breaker trip coil and lockout relays that carry trip current to a trip coil must be operated within the specified time period. The required operations may be via targeted maintenance activities, or by documented operation of these devices for other purposes such as fault clearing.

Are high-speed ground switch trip coils included in the dc control circuitry?

Yes. PRC-005-2 includes high-speed grounding switch trip coils within the dc control circuitry to the degree that the initiating Protection Systems are characterized as "transmission Protection Systems."

Does the control circuitry and trip coil of a non-BES breaker, tripped via a BES protection component, have to be tested per Table 1.5? (Refer to Table 3)

An example of an otherwise non-BES circuit breaker that is tripped via a BES protection component might be (but is not limited to) a 12.5KV circuit breaker feeding (non-black-start) radial loads but has a trip that originates from an under-frequency (81) relay.

- The relay must be verified.
- The voltage signal to the relay must be verified.
- All of the relevant dc supply tests still apply.
- The unmonitored trip circuit between the relay and any lock-out or auxiliary relay must be verified every 12 years.
- The unmonitored trip circuit between the lock-out (or auxiliary relay) and the non-BES breaker does not have to be proven with an electrical trip.
- In the case where there is no lock-out or auxiliary tripping relay used, the trip circuit to the non-BES breaker does not have to be proven with an electrical trip.

- The trip coil of the non-BES circuit breaker does not have to be individually proven with an electrical trip.

Do I have to verify operation of breaker "a" contacts or any other normally closed auxiliary contacts in the trip path of each breaker as part of my control circuit test?

Operation of normally-closed contacts does not have to be verified. Verification of the tripping paths is the requirement. The continuity of the normally closed contacts will be verified when the tripping path is verified.

15.4 Batteries and DC Supplies (Table 1-4)

IEEE guidelines were consulted to arrive at the maintenance activities for batteries. The following guidelines were used: IEEE 450 (for Vented Lead-Acid batteries), IEEE 1188 (for Valve-Regulated Lead-Acid batteries) and IEEE 1106 (for Nickel-Cadmium batteries).

The currently proposed NERC definition of a Protection System is

- Protective relays which respond to electrical quantities,
- Communications systems necessary for correct operation of protective functions,
- Voltage and current sensing devices providing inputs to protective relays,
- Station dc supply associated with protective functions (including station batteries, battery chargers, and non-battery-based dc supply), and
- Control circuitry associated with protective functions through the trip coil(s) of the circuit breakers or other interrupting devices."
- The station battery is not the only component that provides dc power to a Protection System. In the new definition for Protection System "station batteries" are replaced with "station dc supply" to make the battery charger and dc producing stored energy devices (that are not a battery) part of the Protection System that must be maintained.

The PSMT SDT recognizes that there are several technological advances in equipment and testing procedures that allow the owner to choose how to verify that a battery string is free of open circuits. The term "continuity" was introduced into the Standard to allow the owner to choose how to verify continuity of a battery set by various methods, and not to limit the owner to the two methods recommended in the IEEE standards. Continuity as used in Table 1-4 of the Standard refers to verifying that there is a continuous current path from the positive terminal of the station battery set to the negative terminal. Without verifying continuity of a station battery, there is no way to determine that the station battery is available to supply dc power to the station. An open battery string will be an unavailable power source in the event of loss of the battery charger.

Batteries cannot be a unique population segment of a Performance-Based Maintenance Program (PBM) because there are too many variables in the electrochemical process to completely isolate all of the performance-changing criteria necessary for using PBM on battery systems. However, nothing precludes the use of a PBM process for any other part of a dc supply besides the batteries themselves.

15.4.1 Frequently Asked Questions:

What constitutes the station dc supply as mentioned in the definition of Protective System?

The previous definition of Protection System includes batteries, but leaves out chargers. The latest definition includes chargers as well as dc systems that do not utilize batteries. This revision of PRC-005-2 is intended to capture these devices that were not included under the previous definition. The station direct current (dc) supply normally consists of two components: the battery charger and the station battery itself. There are also emerging technologies that provide a source of dc supply that does not include either a battery or charger.

Battery Charger - The battery charger is supplied by an available ac source. At a minimum, the battery charger must be sized to charge the battery (after discharge) and supply the constant dc load. In many cases, it may be sized also to provide sufficient dc current to handle the higher energy requirements of tripping breakers and switches when actuated by the protective relays in the Protection System.

Station Battery - Station batteries provide the dc power required for tripping and for supplying normal dc power to the station in the event of loss of the battery charger. There are several technologies of battery that require unique forms of maintenance as established in Table 1-4.

Emerging Technologies - Station dc supplies are currently being developed that use other energy storage technologies beside the station battery to prevent loss of the station dc supply when ac power is lost. Maintenance of these station dc supplies will require different kinds of tests and inspections. Table 1-4 presents maintenance activities and maximum allowable testing intervals for these new station dc supply technologies. However, because these technologies are relatively new the maintenance activities for these station dc supplies may change over time.

What did the PSMT SDT mean by "continuity" of the dc supply?

The PSMT SDT recognizes that there are several technological advances in equipment and testing procedures that allow the owner to choose how to verify that a battery string is free of open circuits. The term "continuity" was introduced into the Standard to allow the owner to choose how to verify continuity of a battery set by various methods, and not to limit the owner to the two methods recommended in the IEEE standards. Continuity as used in Table 1-4 of the Standard refers to verifying that there is a continuous current path from the positive terminal of the station battery set to the negative terminal. Without verifying continuity of a station battery, there is no way to determine that the station battery is available to supply dc power to the station. Whether it is caused from an open cell or a bad external connection, an open battery string will be an unavailable power source in the event of loss of the battery charger.

The current path through a station battery from its positive to its negative connection to the dc control circuits is composed of two types of elements. These path elements are the electrochemical path through each of its cells and all of the internal and external metallic connections and terminations of the batteries in the battery set. If there is loss of continuity

(an open circuit) in any part of the electrochemical or metallic path the battery set will not be available for service. In the event of the loss of the ac source or battery charger, the battery must be capable of supplying dc current, both for continuous dc loads and for tripping breakers and switches. Without continuity, the battery cannot perform this function.
At generating stations and large transmission stations where battery chargers are capable of handling the maximum current required by the Protection System, there are still problems that could potentially occur when the continuity through the connected battery is interrupted.

- Many battery chargers produce harmonics which can cause failure of dc power supplies in microprocessor based protective relays and other electronic devices connected to station dc supply. In these cases, the substation battery serves as a filter for these harmonics. With the loss of continuity in the battery, the filter provided by the battery is no longer present.
- Loss of electrical continuity of the station battery will cause, regardless of the battery charger's output current capability, a delayed response in full output current from the charger. Almost all chargers have an intentional 1 to 2 second delay to switch from a low substation dc load current to the maximum output of the charger. This delay would cause the opening of circuit breakers to be delayed which could violate system performance standards.

Monitoring of the station dc supply voltage will not indicate that there is a problem with the dc current path through the battery unless the battery charger is taken out of service. At that time a break in the continuity of the station battery current path will be revealed because there will be no voltage on the station dc circuitry. This particular test method, while proving battery continuity, may not be acceptable to all installations.

Although the Standard prescribes what must be accomplished during the maintenance activity it does not prescribe how the maintenance activity should be accomplished. There are several methods that can be used to verify the electrical continuity of the battery. These are not the only possible methods, simply a sampling of some methods:

- One method is to measure that there is current flowing through the battery itself by a simple clamp on milliamp-range ammeter. A battery is always either charging or discharging. Even when a battery is charged there is still a measurable float charge current that can be detected to verify that there is continuity in the electrical path through the battery.

- A simple test for continuity is to remove the battery charger from service and verify that the battery provides voltage and current to the dc system. However, the behavior of the various dc-supplied equipment in the station should be considered before using this approach.
- Manufacturers of microprocessor controlled battery chargers have developed methods for their equipment to periodically (or continuously) test for battery continuity For example, one manufacturer periodically reduces the float voltage on the battery until current from the battery to the dc load can be measured to confirm continuity.
- Applying test current (as in some ohmic testing devices, or devices for locating dc grounds) will provide a current that when measured elsewhere in the string, will prove that the circuit is continuous.
- Internal ohmic measurements of the cells and units of Lead Acid Batteries (VRLA & VLA) can detect lack of continuity within the cells of a battery string and when used in conjunction with resistance measurements of the battery's external connections can prove continuity. Also some methods of taking internal ohmic measurements by their very nature can prove the continuity of a battery string without having to use the results of resistance measurements of the external connections.
- Specific Gravity tests can infer continuity because without continuity there could be no charging occurring and if there is no charging then Specific Gravity will go down below acceptable levels.

No matter how the electrical continuity of a battery set is verified it is a necessary maintenance activity that must be performed at the intervals prescribed by Table 1-4 to insure that the station dc supply has a path that can provide the required current to the Protection System at all times.

When should I check the station batteries to see if they have sufficient energy to perform as designed?

The answer to this question depends on the type of battery (Valve-Regulated Lead-Acid, Vented Lead-Acid, or Nickel-Cadmium), and the maintenance activity chosen.

For example, if you have a Valve-Regulated Lead-Acid (VRLA) station battery, and you have chosen to evaluate the measured cell/unit internal ohmic values to the battery cell's baseline, you will have to perform verification at a maximum maintenance interval of no greater than every six months. While this interval might seem to be quite short, keep in mind that the 6 month interval is consistent with IEEE guidelines for VRLA batteries; this interval provides an accumulation of data that better shows when a VRLA battery is no longer capable of its design capacity.

If, for a VRLA station battery, you choose to conduct a performance capacity test on the entire station battery as the maintenance activity, then you will have to perform verification at a maximum maintenance interval of no greater than every 3 calendar years.

How is a baseline established for cell/unit internal ohmic measurements?

Establishment of cell/unit internal ohmic baseline measurements should be completed when lead acid batteries are newly installed. To ensure that the baseline ohmic cell/unit values are most indicative of the station batteries ability to perform as designed they should be made upon installation of the station battery and the completion of a performance test of the battery's capacity.

When internal ohmic measurements are taken, consistent test equipment should be used to establish the baseline and used for the future trending of the cells internal ohmic measurements because of variances in test equipment and the type of ohmic measurement used by different manufacturer's equipment. Keep in mind that one manufacturer's "Conductance" test equipment does not produce similar results as another manufacturer's "Impedance" test equipment even though both manufacturers have produced "Ohmic" test equipment.

For all new installations of Valve-Regulated Lead-Acid (VRLA) batteries and Vented Lead-Acid (VLA) batteries, where trending of the cells internal ohmic measurements to a baseline are to be used to determine the ability of the station battery to perform as designed, the establishment of the baseline as described above should be followed at the time of installation to insure the most accurate trending of the cell/unit. However, often for older VRLA batteries the owners of the station batteries have not established a baseline at installation. Also for owners of VLA batteries who want to establish a maintenance activity which requires trending of measured ohmic values to a baseline, there was typically no baseline established at installation of the station battery to trend to.

To resolve the problem of the unavailability of baseline internal ohmic measurements for the individual cell/unit of a station battery, many manufacturers of internal ohmic measurement devices have established libraries of baseline values for VRLA and VLA batteries using their testing device. Also several of the battery manufacturers have libraries of baselines for their products that can be used to trend to. However it is important that when using battery manufacturer supplied data that it is verified that the baseline readings to be used were taken with the same ohmic testing device that will be used for future measurements (for example "Conductance Readings" from one manufacturer's test equipment do not correlate to "Impedance Readings" from a different manufacturer's test equipment). Of course, a measurement of "Conductance" from one manufacturer in a given year could be trended against a measurement of "Conductance" from a different manufacturer's device. This would be true for any unit measurements whether it is conductance, impedance, resistance, voltage, amperage, etc.

Although many manufacturers may have provided base line values which will allow trending of the internal ohmic measurements over the remaining life of a station battery, these baselines are not the actual cell/unit measurements for the battery being trended. It is important to have a baseline tailored to the station battery to more accurately use the tool of ohmic measurement trending. That more customized baseline can only be created by following the establishment of a baseline for each cell/unit at the time of installation of the station battery.

Why determine the State of Charge?

Even though there is no present requirement to check the state of charge of a battery, it can be a very useful tool in determining the overall condition of a battery system. The following discussions are offered as a general reference.

When a battery is fully charged the battery is available to deliver its existing capacity. As a battery is discharged its ability to deliver its maximum available capacity is diminished. It is necessary to determine if the state of charge has dropped to an unacceptable level.

IEEE Standards 450, 1188, and 1106 for Vented Lead-Acid (VLA), Valve-Regulated Lead-Acid (VRLA), and Nickel-Cadmium (NiCd) batteries respectively discuss state of charge in great detail in their standards or annexes to their standards. The above IEEE standards are excellent sources for describing how to determine state of charge of the battery system.

What is State of Charge and how can it be determined in a station battery?

The state of charge of a battery refers to the ratio of residual capacity at a given instant to the maximum capacity available from the battery. When a battery is fully charged the battery is available to deliver its existing capacity. As a battery is discharged its ability to deliver its maximum available capacity is diminished. Knowing the amount of energy left in a battery compared with the energy it had when it was fully charged gives the user an indication of how much longer a battery will continue to perform before it needs recharging.

For Vented Lead-Acid (VLA) batteries which use accessible liquid electrolyte, a hydrometer can be used to test the specific gravity of each cell as a measure of its state of charge. The hydrometer depends on measuring changes in the weight of the active chemicals. As the battery discharges the active electrolyte, sulfuric acid, is consumed and the concentration of the sulfuric acid in water is reduced. This in turn reduces the specific gravity of the solution in direct proportion to the state of charge. The actual specific gravity of the electrolyte can therefore be used as an indication of the state of charge of the battery. Hydrometer readings may not tell the whole story, as it takes a while for the acid to get mixed up in the cells of a VLA battery. If measured right after charging, you might see high specific gravity readings at the top of the cell, even though it is much less at the bottom. Conversely if taken shortly after adding water to the cell the specific gravity readings near the top of the cell will be lower than those at the bottom.

Nickel-Cadmium batteries, where the specific gravity of the electrolyte does not change during battery charge and discharge, and Valve-Regulated Lead-Acid (VRLA) batteries, where the electrolyte is not accessible, cannot have their state of charge determined by specific gravity readings. For these two types of batteries and also for VLA batteries, where another method besides taking hydrometer readings is desired, the state of charge may be determined by using the battery charger and taking voltage and current readings during float and equalize (high-rate charge mode). This method is an effective means of determining when the state of charge is low and when it is approaching a fully charged condition which gives the assurance that the available battery capacity will be maximized.

Why determine the Connection Resistance?

High connection resistance can cause abnormal voltage drop or excessive heating during discharge of a station battery. During periods of a high rate of discharge of the station battery a very high resistance can cause severe damage. The maintenance requirement to verify battery terminal connection resistance in Table 1-4 is established to verify that the integrity of all battery electrical connections is acceptable. This verification includes cell-to-cell (intercell) and external circuit terminations. Your method of checking for acceptable values of intercell and terminal connection resistance could be by individual readings or a combination of the two. There are test methods, presently, that can read post termination resistances and resistance values between external posts, there are also test methods presently available that take a combination reading of the post termination connection resistance plus the intercell resistance value plus the post termination connection resistance value. Either of the two methods, or any other method, that can show the adequacy of connections at the battery posts is acceptable.

Adequacy of the electrical terminations can be determined by comparing resistance measurements for all connections taken at the time of station battery's installation to the same

resistance measurements taken at the maintenance interval chosen not to exceed the maximum maintenance interval of Table 1-4. Trending of the interval measurements to the baseline measurements will identify any degradation in the battery connections. When the connection resistance values exceed the acceptance criteria for the connection, the connection is typically disassembled, cleaned, reassembled and measurements taken to verify that the measurements are adequate when compared to the baseline readings.

IEEE Standard 450 for Vented Lead-Acid (VLA) batteries "informative" annex F, and IEEE Standard 1188 for Valve-Regulated Lead-Acid (VRLA) batteries "informative" annex D provide excellent information and examples on performing connection resistance measurements using a microohmmeter and connection detail resistance measurements. Although this information is contained in standards for lead acid batteries the information contained is applicable to Nickel-Cadmium batteries also.

What conditions should be inspected for visible battery cells?

The maintenance requirement to inspect the cell condition of all station battery cells where the cells are visible is a maintenance requirement of Table 1-4. Station batteries are different from any other component in the Protection Station because they are a perishable product due to the electrochemical process which is used to produce dc electrical current and voltage. This inspection is a detailed visual inspection of the cells for abnormalities that occur in the aging process of the cell. In VLA battery visual inspections, some of the things that the inspector is typically looking for on the plates are signs of sulfation of the plates, abnormal color (possible copper contamination) and abnormal conditions such as cracked grids. The visual inspection could look for symptoms of hydration that would indicate that the battery has been left in a completely discharged state for a prolonged period. Besides looking at the plates for signs of aging, all internal connections such as the bus bar connection to each plate and the connections to all posts of the battery need to be visually inspected for abnormalities. In a complete visual inspection for the condition of the cell the cell plates, separators and sediment space of each cell must be looked at for signs of deterioration. An inspection of the station battery's cell condition also includes looking at all terminal posts and cell-to-cell electric connections to ensure they are corrosion free. The case of the battery containing the cell or cells must be inspected for cracks and electrolyte leaks through cracks and the post seals.

This maintenance activity cannot be extended beyond the maximum maintenance interval of Table 1-4 by a Performance-Based Maintenance Program (PBM) because of the electrochemical aging process of the station battery nor can there be any monitoring associated with it because there must be a visual inspection involved in the activity. A remote visual inspection could possibly be done, but its interval must be no greater than the maximum maintenance interval of Table 1-4.

Why consider the ability of the station battery to perform as designed?

Determining the ability of a station battery to perform as designed is critical in the process of determining when the station battery must be replaced or when an individual cell or battery unit must be removed or replaced. For lead acid batteries the ability to perform as designed can be determined in more than one manner.

The two acceptable methods for proving that a station lead acid battery can perform as designed are based on two different philosophies. The first maintenance activity requires tests and evaluation of the internal ohmic measurements on each of the individual cells/units of the station battery to determine that each component can perform as designed and therefore the entire station battery can be verified to perform as designed. The second activity requires a capacity discharge test of the entire station battery to verify that degradation of one or several components (cells) in the station battery has not deteriorated to a point where the total capacity of the station battery system falls below its designed rating.

The first maintenance activity listed in Table 1-4 for verifying that a station battery can perform as designed uses maximum maintenance intervals for evaluating internal ohmic measurements in relation to their baseline measurements that are based on industry experience, EPRI technical reports and application guides, and the IEEE battery standards. By evaluating the internal ohmic measurements for each cell and comparing that measurement to the cell's baseline ohmic measurement low-capacity cells can be identified and eliminated or the whole station battery replaced to keep the station battery capable of performing as designed. Since the philosophy behind internal ohmic measurement evaluation is based on the fact that each battery component must be verified to be able to perform as designed, the interval for verification by this maintenance activity must be shorter to catch individual cell/unit degradation.

It should be noted that even if a lead acid battery unit is composed of multiple cells where the ohmic measurement of each cell cannot be taken, the ohmic test can still be accomplished. The data produced becomes trending data on the multi-cell unit instead of trending individual cells. Care must be taken in the evaluation of the ohmic measures of entire units to detect a bad cell that has a poor ohmic value. Good ohmic values of other cells in the same battery unit can make it harder to detect the poor ohmic measurement of a bad cell because the only ohmic measurement available is of all the cells in the battery unit.

This first maintenance activity is applicable only for Vented Lead-Acid (VLA) and Valve-Regulated Lead-Acid (VRLA) batteries; this trending activity has not shown to be effective for NiCd batteries thus the only choices for owners of NiCd batteries are the performance tests of the second activity (see applicable IEEE guideline for specifics on performance tests).

The second maintenance activity listed in Table 1-4 for verifying that a station battery can perform as designed uses maximum maintenance intervals for capacity testing that were designed to align with the IEEE battery standards. This maintenance activity is applicable for Vented Lead-Acid, Valve-Regulated Lead-Acid, and Nickel-Cadmium batteries.

The maximum maintenance interval for discharge capacity testing is longer than the interval for testing and evaluation of internal ohmic cell measurements. An individual component of a station battery may degrade to an unacceptable level without causing the total station battery to fall below its designed rating under capacity testing.

IEEE Standards 450, 1188, and 1106 for vented lead-acid (VLA), Valve-Regulated Lead-Acid (VRLA), and Nickel-Cadmium (NiCd) batteries respectively (which together are the most commonly used substation batteries on the BES) go into great detail about capacity testing of

the entire battery set to determine that a battery can perform as designed or needs to be replaced soon.

Why in Table 1-4 of PRC-005-2 is there a maintenance activity to inspect the structural intergrity of the battery rack?

The three IEEE standards (1188, 450, and 1106) for VRLA, Vented Lead-Acid, and Nickel-Cadmium batteries all recommend that as part of any battery inspection the battery rack should be inspected. The purpose of this inspection is to verify that the battery rack is correctly installed and has no deterioration that could weaken its structural integrity.

Because the battery rack is specifically designed for the battery that is mounted on it, weakening of its structural members by rust or corrosion can physically jeopardize the battery.

What is required to comply with the "Unintentional dc Grounds" requirement?

In most cases, the first ground that appears on a battery is not a problem. It is the unintentional ground that appears on the opposite pole that becomes problematic. Even then many systems are designed to operate favorably under some unintentional DC ground situations. It is up to the owner of the Protection System to determine if corrective actions are needed on detected unintentional DC grounds. The Standard merely requires that a check be made for the existence of Unintentional DC Grounds. Obviously a "check-off" of some sort will have to be devised by the inspecting entity to document that a check is routinely done for Unintentional DC Grounds because of the possible consequences to the Protection System.

Where the Standard refers to "all cells" is it sufficient to have a documentation method that refers to "all cells" or do we need to have separate documentation for every cell? For example do I need 60 individual documented check-offs for good electrolyte level or would a single check-off per bank be sufficient?

A single check-off per battery bank is sufficient for documentation, as long as the single check-off attests to checking all cells/units.

Does this Standard refer to Station batteries or all batteries, for example Communications Site Batteries?

This Standard refers to Station Batteries. The drafting team does not believe that the scope of this Standard refers to communications sites. The batteries covered under PRC-005-2 are the batteries that supply the trip current to the trip coils of the interrupting devices that are a part of the Protection System. The SDT believes that a loss of power to the communications systems at a remote site would cause the communications systems associated with protective relays to alarm at the substation. At this point the corrective actions can be initiated.

My VRLA batteries have multiple-cells within an individual battery jar (or unit); how am I expected to comply with the cell-to-cell ohmic measurement requirements on these units that I cannot get to?

Measurement of cell/unit (not all batteries allow access to "individual cells" some "units" or jars may have multiple cells within a jar) internal ohmic values of all types of lead acid batteries where the cells of the battery are not visible is a station dc supply maintenance activity in Table 1-4.

What are cell/unit internal ohmic measurements?

With the introduction of Valve-Regulated Lead-Acid (VRLA) batteries to station dc supplies in the 1980's several of the standard maintenance tools that are used on Vented Lead-Acid (VLA) batteries were unable to be used on this new type of lead-acid battery to determine its state of health. The only tools that were available to give indication of the health of these new VRLA batteries were voltage readings of the total battery voltage, the voltage of the individual cells and periodic discharge tests.

In the search for a tool for determining the health of a VRLA battery several manufacturers studied the electrical model of a lead acid battery's current path through its cell. The overall battery current path consists of resistance and inductive and capacitive reactance. The inductive reactance in the current path through the battery is so minuscule when compared to the huge capacitive reactance of the cells that it is often ignored in most circuit models of the battery cell. Taking the basic model of a battery cell manufacturers of battery test equipment have developed and marketed testing devices to take measurements of the current path to detect degradation in the internal path through the cell.

In the battery industry these various types of measurements are referred to as ohmic measurements. Terms used by the industry to describe ohmic measurements are ac conductance, ac impedance, and dc resistance. They are defined by the test equipment providers and IEEE and refer to the method of taking ohmic measurements of a lead acid battery. For example in one manufacturer's ac conductance equipment measurements are taken by applying a voltage of a known frequency and amplitude across a cell or battery unit and observing the ac current flow it produces in response to the voltage. A manufacturer of an ac impedance meter measures ac current of a known frequency and amplitude that is passed through the whole battery string and determines the impedances of each cell or unit by measuring the resultant ac voltage drop across them. On the other hand dc resistance of a cell is measured by a third manufacturer's equipment by applying a dc load across the cell or unit and measuring the step change in both the voltage and current to calculate the internal dc resistance of the cell or unit.

It is important to note that because of the rapid development of the market for ohmic measurement devices there were no standards developed or used to mandate the test signals used in making ohmic measurements. Manufacturers using proprietary methods and applying different frequencies and magnitudes for their signals have developed a diversity of measurement devices. This diversity in test signals coupled with the three different types of ohmic measurements techniques (impedance conductance and resistance) make it impossible to always get the same ohmic measurement for a cell with different ohmic measurement

devices. However, IEEE has recognized the great value for choosing one device for ohmic measurement, no matter who makes it or the method to calculate the ohmic measurement. The only caution given by IEEE and the battery manufacturers is that when trending the cells of a lead acid station battery consistent ohmic measurement devices should be used to establish the baseline measurement and to trend the battery set for its entire life. A consistent measurement device should not be confused with a requirement to always stay with the same manufacturer. After all volts are volts, impedance is impedance, etc. It is just important to not expect to get consistent "Impedance" data if you switch to a "Conductance" measuring device in the middle of your trending program.

For VRLA batteries both IEEE Standard 1188 (Maintenance, Testing and Replacement of VRLA Batteries) and IEEE Standard 1187 (Installation Design and Installation of VRLA Batteries) recognize the importance of the maintenance activity of establishing a baseline for "cell/unit internal ohmic measurements (impedance, conductance and resistance)" and trending them at frequent intervals over the life of the battery. There are extensive discussions about the need for taking these measurements in these standards. IEEE Standard 1188 requires taking internal ohmic values as described in Annex C4 during regular inspections of the station battery. For VRLA batteries IEEE Standard 1188 in talking about the necessity of establishing a base line and trending it over time says, "depending on the degree of change a performance test, cell replacement or other corrective action may be necessary.

For VLA batteries IEEE Standard 484 (Installation of VLA batteries) gives several guidelines about establishing baseline measurements on newly installed lead acid stationary batteries. The standard also discusses the need to look for significant changes in the ohmic measurements, the caution that measurement data will differ with each type of model of instrument used, and lists a number of factors that affect ohmic measurements.

At the beginning of the 21st century EPRI conducted a series of extensive studies to determine the relationship of internal ohmic measurements to the capacity of a lead acid battery cell. The studies indicated that internal ohmic measurements were in fact a good indicator of a lead acid battery cell's capacity but because users often were only interested in the total station battery capacity and the technology does not precisely predict overall battery capacity, if a user only needs "an accurate measure of the overall battery capacity" they should "perform a battery capacity test."

Prior to the EPRI studies some large and small companies which owned and maintained station dc supplies in NERC Protection Systems developed maintenance programs where trending of ohmic measurements of cells/units of the station's battery became the maintenance activity for determining if the station battery could perform as designed. By evaluation of the trending of the ohmic measurements over time the owner could track the performance of the individual components of the station battery and determine if a total station battery or components of it required capacity testing, removal, replacement or in many instances replacement of the entire station battery. By taking this approach these owners have eliminated having to perform capacity testing at prescribed intervals to determine if a battery needs to be replaced and are still able to effectively determine if a station battery can perform as designed.

Why verify voltage?

There are two required maintenance activities associated with verification of dc voltages in Table 1-4. These two required activities are to verify station dc supply voltage and float voltage of the battery charger, and have different maximum maintenance intervals. Both of these voltage verification requirements relate directly to the battery charger maintenance.

The verification of the dc supply voltage is simply an observation of battery voltage to prove that the charger has not been lost or is not malfunctioning; a reading taken from the battery charger panel meter or even SCADA values of the dc voltage could be some of the ways that one could satisfy the requirements. Low battery voltage below float voltage indicates that the battery may be on discharge and if not corrected the station battery could discharge down to some extremely low value that will not operate the Protection System. High voltage, close to or above the maximum allowable dc voltage for equipment connected to the station dc supply indicates the battery charger may be malfunctioning by producing high dc voltage levels on the Protection System. If corrective actions are not taken to bring the high voltage down, the dc power supplies and other electronic devices connected to the station dc supply may be damaged. The maintenance activity of verifying the float voltage of the battery charger is not to prove that a charger is lost or producing high voltages on the station dc supply, but rather to prove that the charger is properly floating the battery within the proper voltage limits. As above, there are many ways that this requirement can be met.

Why check for the electrolyte level?

In Vented Lead-Acid (VLA) and Nickel-Cadmium (NiCd) batteries the visible electrolyte level must be checked as one of the required maintenance activities that must be performed at an interval that is equal to or less than the maximum maintenance interval of Table 1-4. Because the electrolyte level in Valve-Regulated Lead-Acid (VRLA) batteries cannot be observed there is no maintenance activity listed in Table 1-4 of the Standard for checking the electrolyte level.

Low electrolyte level of any cell of a VLA or NiCd station battery is a condition requiring correction. Typically the electrolyte level should be returned to an acceptable level for both types of batteries (VLA and NiCd) by adding distilled or other approved-quality water to the cell. Often people confuse the interval for watering all cells required due to evaporation of the electrolyte in the station battery cells with the maximum maintenance interval required to check the electrolyte level. In many of the modern station batteries the jar containing the electrolyte is so large with the band between the high and low electrolyte level so wide that normal evaporation which would require periodic watering of all cells takes several years to occur. However, because loss of electrolyte due to cracks in the jar, overcharging of the station battery or other unforeseen events can cause rapid loss of electrolyte the shorter maximum maintenance intervals for checking the electrolyte level are required. A low level of electrolyte in a VLA battery cell which exposes the tops of the plates can cause the exposed portion of the plates to accelerated sulfation resulting in loss of cell capacity. Also, in a VLA battery where the electrolyte level goes below the end of the cell withdrawal tube or filling funnel, gasses can exit the cell by the tube instead of the flame arrester and present an explosion hazard.

Why does it appear that there are two maintenance activities in Table 1-4(b) (for VRLA batteries) that appear to be the same activity and have the same maximum maintenance interval?

There are two different and distinct reasons for doing almost the same maintenance activity at the same interval for Valve-Regulated Lead-Acid (VRLA) batteries. The first similar activity for VRLA batteries (Table 1-4(b)) that has the same maximum maintenance interval is to “measure battery cell/unit internal ohmic values.” Part of the reason for this activity is because the visual inspection of the cell condition is unavailable for VRLA batteries. Besides the requirement to measure the internal ohmic measurements of VRLA batteries to determine the internal health of the cell, the maximum maintenance interval for this activity is significantly shorter than the interval for Vented Lead-Acid (VLA) due to some unique failure modes for VRLA batteries. Some of the potential problems that VRLA batteries are susceptible to that do not affect VLA batteries are thermal runaway, cell dry-out, and cell reversal when one cell has a very low capacity.

The other similar activity listed in Table 1-4(b) is “verify that the station battery can perform as designed by evaluating the measured cell/unit internal ohmic values to station battery baseline.” This activity allows an owner the option to choose between this activity with its much shorter maximum maintenance interval or the longer maximum maintenance interval for the maintenance activity to “Verify that the station battery can perform as designed by conducting a performance, service, or modified performance capacity test of the entire battery bank.”

For VRLA batteries, there are two drivers for internal ohmic readings. The first driver is for a means to trend battery life. A comparison and trending against the baseline new battery ohmic reading can be used in lieu of capacity tests to determine remaining battery life. Remaining battery life is analogous to stating that the battery is still able to "perform as designed". This is the intent of the “perform as designed 6 month test” at Row 4 on Table 1-4b.

The second big driver is VRLA batteries tendency for thermal runaway. This is the intent of the “thermal runaway test” at Row 2 on Table 1-4b. In order to detect a cell in thermal runaway, you need not have a formal trending program to track when a cell has reached a 25% increase over baseline. Rather it will stick out like a sore thumb when compared to the other cells in a string at a given point in time regardless of the age of all the cells in a string. In other words, if the battery is 10 years old and all the cells are gradually approaching a 25% increase in ohmic values over baseline, then you have a battery which is approaching end of life. You need to get ready to buy a new battery but you do not have to worry about an impending catastrophic failure. On the other hand, if the battery is five years old and you have one cell that has a markedly different ohmic reading than all the other cells, then you need to be worried that this cell is in thermal runaway and catastrophic failure is imminent.

If an entity elects to use a capacity test rather than a cell ohmic value trending program, this does not eliminate the need to be concerned about thermal runaway – the entity still needs to do the 6 month readings and look for cells which are outliers in the string but they need not trend results against the factory/as new baseline. Some entities will not mind the extra administrative burden of having the ongoing trending program against baseline - others would rather just do the capacity test and not have to trend the data against baseline. Nonetheless, all entities must look for ohmic outliers on a 6 month basis.

It is possible to accomplish both tasks listed (trend testing for capacity and testing for thermal runaway candidates) with the very same ohmic test. It becomes an analysis exercise of watching the trend from baselines and watching for the oblique cell measurement.

15.5 Associated communications equipment (Table 1-2)

The equipment used for tripping in a communications assisted trip scheme is a vital piece of the trip circuit. Remote action causing a local trip can be thought of as another parallel trip path to the trip coil that must be tested.

Besides the trip output and wiring to the trip coil(s) there is also a communications medium that must be maintained.

Newer technologies now exist that achieve communications-assisted tripping without the conventional wiring practices of older technology.

For example: older technologies may have included *Frequency Shift Key* methods. This technology requires that guard and trip levels be maintained.

The actual tripping path(s) to the trip coil(s) may be tested as a parallel trip path within the dc control circuitry tests.

Emerging technologies transfer digital information over a variety of carrier mediums that are then interpreted locally as trip signals.

The requirements apply to the communicated signal needed for the proper operation of the protective relay trip logic or scheme. Therefore this Standard is applied to equipment used to convey both trip signals (permissive or direct) and block signals.

It was the intent of this Standard to require that a test be performed on any communications-assisted trip scheme regardless of the vintage of technology. The essential element is that the tripping (or blocking) occurs locally when the remote action has been asserted; or that the tripping (or blocking) occurs remotely when the local action is asserted. Note that the required testing can still be done within the concept of testing by overlapping segments. Associated communications equipment can be (but is not limited to) testing at other times and different frequencies as the protective relays, the individual trip paths and the affected circuit interrupting devices.

Some newer installations utilize digital signals over fiber-optics from the protective relays in the control house to the circuit interrupting device in the yard. This method of tripping the circuit breaker, even though it might be considered communications, must be maintained per the dc control circuitry maintenance requirements.

15.5.1 Frequently Asked Questions:

What are some examples of mechanisms to check communications equipment functioning?

For unmonitored Protection Systems, various types of communications systems will have different facilities for on-site integrity checking to be performed at least every four months during a substation visit. Some examples are, but not limited to:

- On-off power-line carrier systems can be checked by performing a manual carrier keying test between the line terminals, or carrier check-back test from one terminal.
- Systems which use frequency-shift communications with a continuous guard signal (over a telephone circuit, analog microwave system, etc.) can be checked by observing for a loss-of-guard indication or alarm. For frequency-shift power-line carrier systems, the guard signal level meter can also be checked.
- Hard-wired pilot wire line Protection Systems typically have pilot-wire monitoring relays that give an alarm indication for a pilot wire ground or open pilot wire circuit loop.
- Digital communications systems typically have a data reception indicator or data error indicator (based on loss of signal, bit error rate, or frame error checking).

For monitored Protection Systems, various types of communications systems will have different facilities for monitoring the presence of the communications channel, and activating alarms that can be monitored remotely. Some examples are, but not limited to:

- On-off power-line carrier systems can be shown to be operational by automated periodic power-line carrier check-back tests, with remote alarming of failures.
- Systems which use a frequency-shift communications with a continuous guard signal (over a telephone circuit, analog microwave system, etc.) can be remotely monitored with a loss-of-guard alarm or low signal level alarm.
- Hard-wired pilot wire line Protection Systems can be monitored by remote alarming of pilot-wire monitoring relays.
- Digital communications systems can activate remotely monitored alarms for data reception loss or data error indications.
- Systems can be queried for the data error rates.

For the highest degree of monitoring of Protection Systems, the communications system must monitor all aspects of the performance and quality of the channel that show it meets the design performance criteria, including monitoring of the channel interface to protective relays.

- In many communications systems signal quality measurements including signal-to-noise ratio, received signal level, reflected transmitter power or standing wave ratio, propagation delay, and data error rates are compared to alarm limits. These alarms are connected for remote monitoring.
- Alarms for inadequate performance are remotely monitored at all times, and the alarm communications system to the remote monitoring site must itself be continuously monitored to assure that the actual alarm status at the communications equipment location is continuously being reflected at the remote monitoring site.

What is needed for the 4-month inspection of communications-assisted trip scheme equipment?

The 4-month inspection applies to unmonitored equipment. An example of compliance with this requirement might be, but is not limited to:

With each site visit, check that the equipment is free from alarms, check any metered signal levels, and that power is still applied. While this might be explicit for a particular type of equipment (i.e. FSK equipment), the concept should be that the entity verify that the communications equipment that is used in a Protection System is operable through a cursory inspection and site visit. This site visit can be eliminated on this particular example if the FSK equipment had a monitored alarm on Loss of Guard. Blocking carrier systems with auto checkbacks will present an alarm when the channel fails allowing a visual indication. With no auto checkback, the channel integrity will need to be verified by a manual checkback or a two ended signal check. This check could also be eliminated by bring the auto checkback failure alarm to the monitored central location.

Does a fiber optic I/O scheme used for breaker tripping or control within a station, for example - transmitting a trip signal or control logic between the control house and the breaker control cabinet, constitute a communications system?

This equipment is presently classified as being part of the Protection System Control Circuitry and tested per the portions of Table 1 applicable to Protection System Control Circuitry rather than those portions of the table applicable to communications equipment.

In Table 1-2, the Maintenance Activities section of the Protective System Communications Equipment and Channels refers to the quality of the channel meeting "performance criteria". What is meant by performance criteria?

Protection System communications channels must have a means of determining if the channel and communications equipment is operating normally. If the channel is not operating normally an alarm will be indicated. For unmonitored systems this alarm will probably be on the panel. For monitored systems, the alarm will be transmitted to a remote location.

Each entity will have established a nominal performance level for each protective system communications channel that is consistent with proper functioning of the Protection System. If that level of nominal performance is not being met, the system will go into alarm. Following are some examples of protective system communications channel performance measuring:

- For direct transfer trip using a frequency shift power line carrier channel, a guard level monitor is part of the equipment. A normal receive level is established when the system is calibrated and if the signal level drops below an established level, the system will indicate an alarm.
- An on-off blocking signal over power line carrier is used for directional comparison blocking schemes on transmission lines. During a fault, block logic is sent to the remote relays by turning on a local transmitter and sending the signal over the power line to a receiver at the remote end. This signal is normally off so continuous levels cannot be checked. These schemes use check-back testing to determine channel performance. A predetermined signal sequence is sent to the remote end and the remote end decodes

this signal and sends a signal sequence back. If the sending end receives the correct information from the remote terminal, the test passes and no alarm is indicated. Full power and reduced power tests are typically run. Power levels for these tests are determined at the time of calibration.

- Pilot wire relay systems use a hardwire communications circuit to communicate between the local and remote ends of the protective zone. This circuit is monitored by circulating a dc current between the relay systems. A typical level may be 1 mA. If the level drops below the setting of the alarm monitor, the system will indicate an alarm.
- Modern digital relay systems use data communications to transmit relay information to the remote end relays. An example of this is a line current differential scheme commonly used on transmission lines. The protective relays communicate current magnitude and phase information over the communications path to determine if the fault is located in the protective zone. Quantities such as digital packet loss, bit error rate and channel delay are monitored to determine the quality of the channel. These limits are determined and set during relay commissioning. Once set, any channel quality problems that fall outside the set levels will indicate an alarm.

The previous examples show how some protective relay communications channels can be monitored and how the channel performance can be compared to performance criteria established by the entity. This Standard does not state what the performance criteria will be; it just requires that the entity establish nominal criteria so protective system channel monitoring can be performed.

How is the performance criteria of Protection System communications equipment involved in the maintenance program?

An entity determines the acceptable performance criteria depending on the technology implemented. If the communications channel performance of a Protection System varies from the pre-determined performance criteria for that system then these results should be investigated and resolved.

How do I verify the A/D converters of microprocessor-based relays?

There are a variety of ways to do this. Two examples would be: using values gathered via data communications and automatically comparing these values with values from other sources, or using groupings of other measurements (such as vector summation of bus feeder currents) for comparison. Many other methods are possible.

15.6 Alarms (Table 2)

In addition to the tables of maintenance for the components of a Protection System, there is an additional table added for alarms. This additional table was added for clarity. This enabled the common alarm attributes to be consolidated into a single spot and thus make it easier to read the Tables 1-1 through 1-5. The alarms need to arrive at a site wherein a corrective action can be initiated. This could be a control room, operations center, etc. The alarming mechanism can be a Standard alarming system or an auto-polling system, the only requirement is that the

alarm be brought to the action-site within 24 hours. This effectively makes manned-stations equivalent to monitored stations. The alarm of a monitored point (for example a monitored trip path with a lamp) in a manned-station now makes that monitored point eligible for monitored status. Obviously, these same rules apply to a non-manned-station, which is that if the monitored point has an alarm that is auto-reported to the operations center (for example) within 24 hours then it too is considered monitored.

15.6.1 Frequently Asked Questions:

Why are there activities defined for varying degrees of monitoring a Protection System component when that level of technology may not yet be available?

There may already be some equipment available that is capable of meeting the highest levels of monitoring criteria listed in the Tables. However, even if there is no equipment available today that can meet this level of monitoring the Standard establishes the necessary requirements for when such equipment becomes available. By creating a roadmap for development, this provision makes the Standard technology-neutral. The Standard Drafting Team wants to avoid the need to revise the Standard in a few years to accommodate technology advances that may be coming to the industry.

Does a fail-safe "form b" contact that is alarmed to a 24/7 operation center classify as an alarm path with monitoring?

If the fail-safe "form-b" contact that is alarmed to a 24/7 operation center causes the alarm to activate for failure of any portion of the alarming path from the alarm origin to the 24/7 operations center then this can be classified as an alarm path with monitoring.

15.7 Distributed UFLS and Distributed UVLS Systems (Table 3)

Distributed UFLS and Distributed UVLS Systems have their maintenance activities documented in Table 3 due to their distributed nature allowing reduced maintenance activities and extended maximum maintenance intervals. Relays have the same maintenance activities and intervals as Table 1-1. Voltage and current sensing devices have the same maintenance activity and interval as Table 1-2. DC systems need only have their voltage read at the relay every twelve years. Control circuits have the following maintenance activities every twelve years:

- Verify the trip path between the relay and lock-out and/or auxiliary tripping device(s).
- Verify operation of any lock-out used in the trip circuit.
- No verification of trip path required between the lock-out (and/or auxiliary tripping device) and the non-BES interrupting device.
- No verification of trip path required between the relay and trip coil for circuits that have no lock-out and/or auxiliary tripping device(s).
- No verification of trip coil required.

No maintenance activity is required for associated communication systems for distributed UFLS and distributed UVLS schemes.

Non-BES interrupting devices that participate in a distributed UFLS or distributed UVLS scheme are excluded from the tripping requirement, and part of the control circuit test requirement; however the part of the trip path control circuitry between the load shed relay and lock-out or auxiliary tripping relay must be tested at least once every 12 years. In the case where there is no lock-out or auxiliary tripping relay used in a distributed UFLS or UVLS scheme which is not part of the BES, there is no control circuit test requirement. There are many circuit interrupting devices in the distribution system that will be operating for any given under-frequency event that requires tripping for that event. A failure in the tripping-action of a single distributed system circuit breaker (or non-BES equipment interruption device) will be far less significant than, for example, any single Transmission Protection System failure such as a failure of a bus differential lock-out relay. While many failures of these distributed system circuit breakers (or non-BES equipment interruption device) could add up to be significant, it is also believed that many circuit breakers are operated often on just fault clearing duty and therefore these circuit breakers are operated at least as frequently as any requirements that appear in this Standard.

There are times when a Protection System component will be used on a BES device as well as a non-BES device, such as a battery bank that serves both a BES circuit breaker and a non-BES interrupting device used for UFLS. In such a case, the battery bank (or other Protection System component) will be subject to the Tables of the Standard because it is used for the BES.

15.7.1 Frequently Asked Questions:

The standard reaches further into the distribution system than we would like for UFLS and UVLS …

While UFLS and UVLS equipment are located on the distribution network, their job is to protect the Bulk Electric System. This is not beyond the scope of NERC's 215 authority.

FPA section 215(a) definitions section defines "bulk-power system as (A) facilities and control systems necessary for operating an interconnected electric energy transmission network (or any portion thereof)." That definition then is limited by a later statement which adds the term bulk-power system "does not include facilities used in the local distribution of electric energy." Also, section 215 also covers users, owners, and operators of bulk-power facilities.

UFLS and UVLS (when the UVLS is installed to prevent system voltage collapse or voltage instability for BES reliability) are not "used in the local distribution of electric energy" despite their location on local distribution networks. Further, if UFLS/UVLS facilities were not covered by the Reliability Standards, then in order to protect the integrity of the BES during under-frequency or under-voltage events, that load would have to be shed at the transmission bus to ensure the load-generation balance and voltage stability is maintained on the BES.

15.8 Examples of Evidence of Compliance

To comply with the requirements of this Standard an entity will have to document and save evidence. The evidence can be of many different forms. The Standard Drafting Team recognizes that there are concurrent evidence requirements of other NERC Standards that could, at times, fulfill evidence requirements of this Standard.

15.8.1 Frequently Asked Questions:

What forms of evidence are acceptable?

Acceptable forms of evidence, as relevant for the Requirement being documented, include but are not limited to:

- Process documents or plans
- Data (such as relay settings sheets, photos, SCADA, and test records)
- Database lists, records and/or screen shots that demonstrate compliance information
- Prints, diagrams and/or schematics
- Maintenance records
- Logs (operator, substation, and other types of log)
- Inspection forms
- Mail, memos, or email proving the required information was exchanged, coordinated, submitted or received
- Check-off forms (paper or electronic)
- Any record that demonstrates that the maintenance activity was known, accounted for, and/or performed.

If I replace a failed Protection System component with another component, what testing do I need to perform on the new component?

In order to reset the Table 1 maintenance interval for the replacement component, all relevant Table 1 activities for the component should be performed.

I have evidence to show compliance for PRC-016 ("Special Protection System Misoperation"). Can I also use it to show compliance for this Standard, PRC-005-2?

Maintaining evidence for operation of Special Protection Systems could concurrently be utilized as proof of the operation of the associated trip coil (provided one can be certain of the trip coil involved). Thus the reporting requirements that one may have to do for the Misoperation of a Special Protection Scheme under PRC-016 could work for the activity tracking requirements under this PRC-005-2.

I maintain disturbance records which show Protection System operations. Can I use these records to show compliance?

These records can be concurrently utilized as dc trip path verifications to the degree that they demonstrate the proper function of that dc trip path.

I maintain test reports on some of my components of my Protection System components. Can I use these test reports to show that I have verified a maintenance activity?

Yes.

References

1. Protection System Maintenance: A Technical Reference. Prepared by the System Protection and Controls Task Force of the NERC Planning Committee. Dated September 13, 2007.

2. "Predicating The Optimum Routine test Interval For Protection Relays," by J. J. Kumm, M.S. Weber, D. Hou, and E. O. Schweitzer, III, IEEE Transactions on Power Delivery, Vol. 10, No. 2, April 1995.

3. "Transmission Relay System Performance Comparison For 2000, 2001, 2002, 2003, 2004 and 2005," Working Group I17 of Power System Relaying Committee of IEEE Power Engineering Society, May 2006.

4. "A Survey of Relaying Test Practices," Special Report by WG I11 of Power System Relaying Committee of IEEE Power Engineering Society, September 16, 1999.

5. "Transmission Protective Relay System Performance Measuring Methodology," Working Group I3 of Power System Relaying Committee of IEEE Power Engineering Society, January 2002.

6. "Processes, Issues, Trends and Quality Control of Relay Settings," Working Group C3 of Power System Relaying Committee of IEEE Power Engineering Society, December 2006.

7. "Proposed Statistical Performance Measures for Microprocessor-Based Transmission-Line Protective Relays, Part I - Explanation of the Statistics, and Part II - Collection and Uses of Data," Working Group D5 of Power System Relaying Committee of IEEE Power Engineering Society, May 1995; Papers 96WM 016-6 PWRD and 96WM 127-1 PWRD, 1996 IEEE Power Engineering Society Winter Meeting.

8. "Analysis And Guidelines For Testing Numerical Protection Schemes," Final Report of CIGRE WG 34.10, August 2000.

9. "Use of Preventative Maintenance and System Performance Data to Optimize Scheduled Maintenance Intervals," H. Anderson, R. Loughlin, and J. Zipp, Georgia Tech Protective Relay Conference, May 1996.

PSMT SDT References

10. "Essentials of Statistics for Business and Economics" Anderson, Sweeney, Williams, 2003

11. "Introduction to Statistics and Data Analysis" - Second Edition, Peck, Olson, Devore, 2005

12. "Statistical Analysis for Business Decisions" Peters, Summers, 1968

Figures

Figure 1: Typical Transmission System

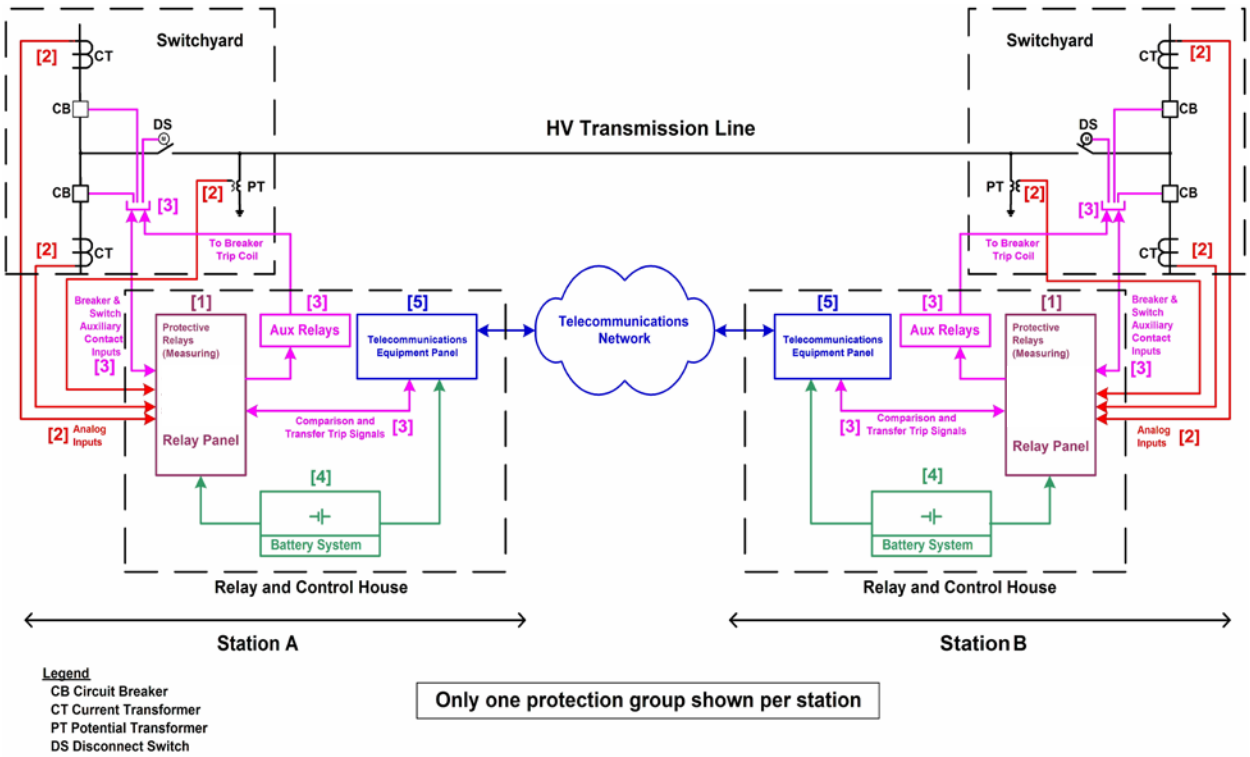

For information on components, see ***Figure 1 & 2 Legend – Components of Protection Systems***

Figure 2: Typical Generation System

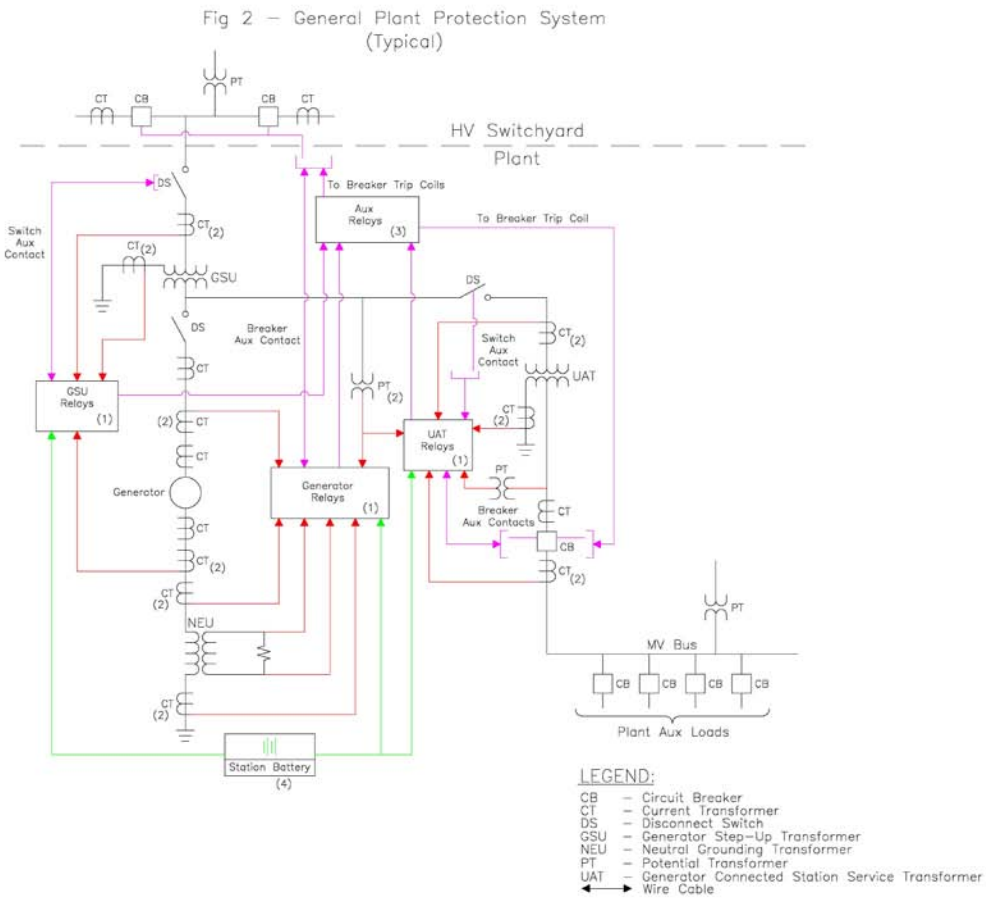

For information on components, see ***Figure 1 & 2 Legend – Components of Protection Systems***

Figure 1 & 2 Legend – Components of Protection Systems

Number in Figure	Component of Protection System	Includes	Excludes
1	Protective relays which respond to electrical quantities	All protective relays that use current and/or voltage inputs from current & voltage sensors and that trip the 86, 94 or trip coil.	Devices that use non-electrical methods of operation including thermal, pressure, gas accumulation, and vibration. Any ancillary equipment not specified in the definition of Protection Systems. Control and/or monitoring equipment that is not a part of the automatic tripping action of the Protection System
2	Voltage and current sensing devices providing inputs to protective relays	The signals from the voltage & current sensing devices to the protective relay input.	Voltage & current sensing devices that are not a part of the Protection System, including sync-check systems, metering systems and data acquisition systems.
3	Control circuitry associated with protective functions	All control wiring (or other medium for conveying trip signals) associated with the tripping action of 86 devices, 94 devices or trip coils (from all parallel trip paths). This would include fiber-optic systems that carry a trip signal as well as hard-wired systems that carry trip current.	Closing circuits, SCADA circuits, other devices in control scheme not passing trip current
4	Station dc supply	Batteries and battery chargers and any control power system which has the function of supplying power to the protective relays, associated trip circuits and trip coils.	Any power supplies that are not used to power protective relays or their associated trip circuits and trip coils.
5	Communications systems necessary for correct operation of protective functions	Tele-protection equipment used to convey specific information, in the form of analog or digital signals, necessary for the correct operation of protective functions.	Any communications equipment that is not used to convey information necessary for the correct operation of protective functions.

Additional information can be found in References

Appendix A

Appendix A

The following illustrates the concept of overlapping verifications and tests as summarized in Section 10 of the paper. As an example, Figure A-1 shows protection for a critical transmission line by carrier blocking directional comparison pilot relaying. The goal is to verify the ability of the entire two-terminal pilot protection scheme to protect for line faults, and to avoid over-tripping for faults external to the transmission line zone of protection bounded by the current transformer locations.

Figure A-1

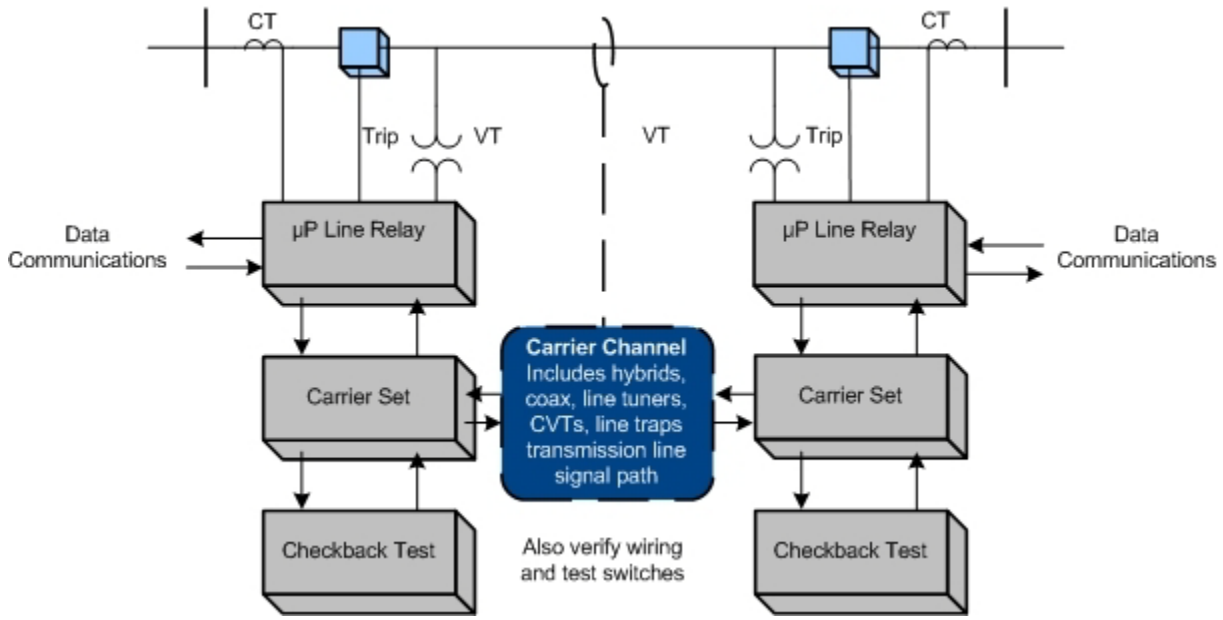

In this example (Figure A1), verification takes advantage of the self-monitoring features of microprocessor multifunction line relays at each end of the line. For each of the line relays themselves, the example assumes that the user has the following arrangements in place:

1. The relay has a data communications port that can be accessed from remote locations.
2. The relay has internal self-monitoring programs and functions that report failures of internal electronics, via communications messages or alarm contacts to SCADA.
3. The relays report loss of dc power, and the relays themselves or external monitors report the state of the dc battery supply.
4. The CT and PT inputs to the relays are used for continuous calculation of metered values of volts, amperes, plus Watts and VARs on the line. These metered values are reported by data communications. For maintenance, the user elects to compare these readings to those of other relays, meters, or DFRs. The other readings may be from redundant relaying or measurement systems or they may be derived from values in other protection zones.

Comparison with other such readings to within required relaying accuracy verifies Voltage & Current Sensing Devices, wiring, and analog signal input processing of the relays. One effective way to do this is to utilize the relay metered values directly in SCADA, where they can be compared with other references or state estimator values.

5. Breaker status indication from auxiliary contacts is verified in the same way as in (2). Status indications must be consistent with the flow or absence of current.
6. Continuity of the breaker trip circuit from dc bus through the trip coil is monitored by the relay and reported via communications.
7. Correct operation of the on-off carrier channel is also critical to security of the Protection System, so each carrier set has a connected or integrated automatic checkback test unit. The automatic checkback test runs several times a day. Newer carrier sets with integrated checkback testing check for received signal level and report abnormal channel attenuation or noise, even if the problem is not severe enough to completely disable the channel.

These monitoring activities plus the check-back test comprise automatic verification of all the Protection System elements that experience tells us are the most prone to fail. But, does this comprise a complete verification?

Figure A-2

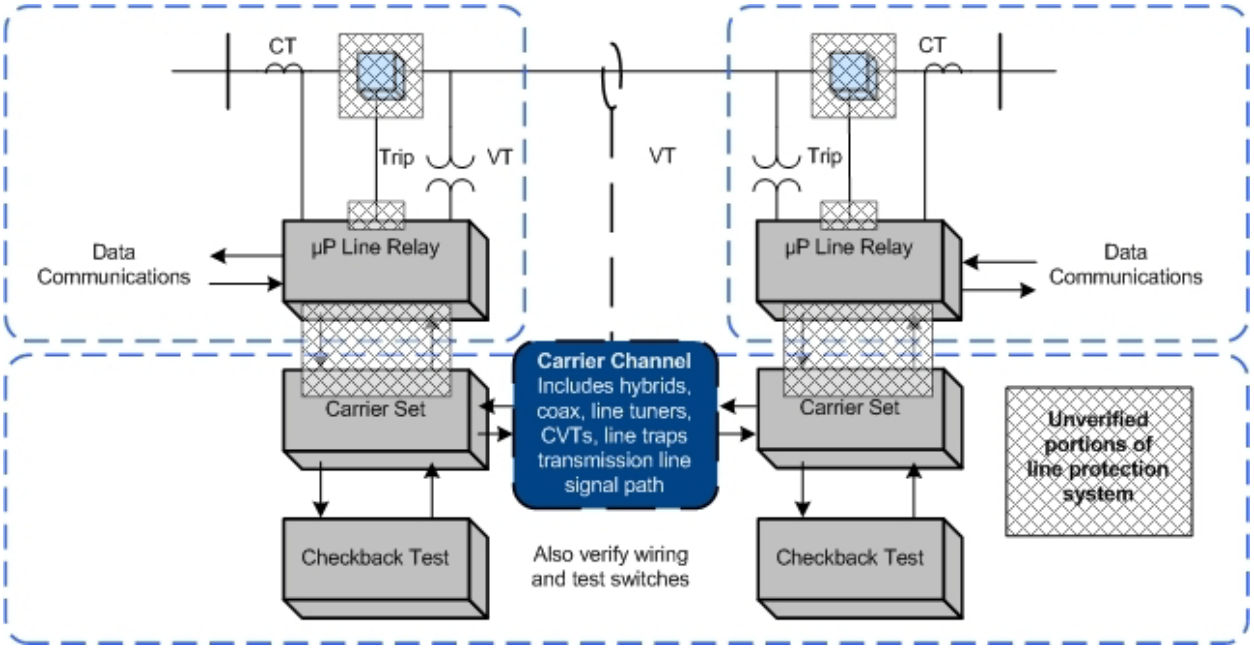

The dotted boxes of Figure A-2 show the sections of verification defined by the monitoring and verification practices just listed. These sections are not completely overlapping, and the shaded regions show elements that are not verified:

1. The continuity of trip coils is verified, but no means is provided for validating the ability of the circuit breaker to trip if the trip coil should be energized.
2. Within each line relay, all the microprocessors that participate in the trip decision have been verified by internal monitoring. However, the trip circuit is actually energized by the contacts of a small telephone-type "ice cube" relay within the line protective relay. The microprocessor energizes the coil of this ice cube relay through its output data port and a transistor driver circuit. There is no monitoring of the output port, driver circuit, ice cube relay, or contacts of that relay. These components are critical for tripping the circuit breaker for a fault.
3. The check-back test of the carrier channel does not verify the connections between the relaying microprocessor internal decision programs and the carrier transmitter keying circuit or the carrier receiver output state. These connections include microprocessor I/O ports, electronic driver circuits, wiring, and sometimes telephone-type auxiliary relays.
4. The correct states of breaker and disconnect switch auxiliary contacts are monitored, but this does not confirm that the state change indication is correct when the breaker or switch opens.

A practical solution for (1) and (2) is to observe actual breaker tripping, with a specified maximum time interval between trip tests. Clearing of naturally-occurring faults are demonstrations of operation that reset the time interval clock for testing of each breaker tripped in this way. If faults do not occur, manual tripping of the breaker through the relay trip output via data communications to the relay microprocessor meets the requirement for periodic testing.

PRC-005 does not address breaker maintenance, and its Protection System test requirements can be met by energizing the trip circuit in a test mode (breaker disconnected) through the relay microprocessor. This can be done via a front-panel button command to the relay logic, or application of a simulated fault with a relay test set. However, utilities have found that breakers often show problems during Protection System tests. It is recommended that Protection System verification include periodic testing of the actual tripping of connected circuit breakers.

Testing of the relay-carrier set interface in (3) requires that each relay key its transmitter, and that the other relay demonstrate reception of that blocking carrier. This can be observed from relay or DFR records during naturally occurring faults, or by a manual test. If the checkback test sequence were incorporated in the relay logic, the carrier sets and carrier channel are then included in the overlapping segments monitored by the two relays, and the monitoring gap is completely eliminated.

Appendix B

Appendix B — Protection System Maintenance Standard Drafting Team

Charles W. Rogers
Chairman
Consumers Energy Co.

John B. Anderson
Xcel Energy

Merle Ashton
Tri-State G&T

Bob Bentert
Florida Power & Light Company

Forrest Brock
Western Farmers Electric Cooperative

Aaron Feathers
Pacific Gas and Electric Company

Sam Francis
Oncor Electric Delivery

Carol Gerou
Midwest Reliability Organization

Russell C. Hardison
Tennessee Valley Authority

David Harper
NRG Texas Maintenance Services

James M. Kinney
FirstEnergy Corporation

Mark Lucas
ComEd

Kristina Marriott
ENOSERV

Al McMeekin
NERC

Michael Palusso
Southern California Edison

Mark Peterson
Great River Energy

John Schecter
American Electric Power

William D. Shultz
Southern Company Generation

Eric A. Udren
Quanta Technology

Scott Vaughan
City of Roseville Electric Department

Matthew Westrich
American Transmission Company

Philip B. Winston
Southern Company Transmission

David Youngblood
Luminant Power

John A. Zipp
ITC Holdings

NERC

NORTH AMERICAN ELECTRIC RELIABILITY CORPORATION

~~PRC-005-2~~
~~Protection System Maintenance~~

~~Supplementary Reference & FAQ~~

to ensure the reliability of the bulk power system

~~Draft~~

116-390 Village Blvd., Princeton, NJ 08540
609.452.8060 | 609.452.9550 fax
www.nerc.com

~~July 29, 2011~~

~~Prepared by the~~

~~Protection System Maintenance and Testing Standard Drafting Team~~

NERC
NORTH AMERICAN ELECTRIC
RELIABILITY CORPORATION

Supplementary Reference and FAQ - Draft

PRC-005-2 Protection System Maintenance

January 17, 2012

RELIABILITY | ACCOUNTABILITY

3353 Peachtree Road NE
Suite 600, North Tower
Atlanta, GA 30326
404-446-2560 | www.nerc.com

Table of Contents

Table of Contents ii

1. Introduction and Summary 1

2. Need for Verifying Protection System Performance 2

2.1 Existing NERC Standards for Protection System Maintenance and Testing 2

2.2 Protection System Definition 4

2.3 Applicability of New Protection System Maintenance Standards 4

2.3.1 Frequently Asked Questions: 5

2.4 Applicable Relays 7

2.4.1 Frequently Asked Questions: 7

3. Protection Systems Product Generations 10

4. Definitions 11

4.1 Frequently Asked Questions: 11

5. Time-Based Maintenance (TMB) Programs 14

5.1 Maintenance Practices 14

5.1.1 Frequently Asked Questions: 16

5.2 Extending Time-Based Maintenance 18

5.2.1 Frequently Asked Question: 19

6. Condition-Based Maintenance (CMB) Programs 20

6.1 Frequently Asked Questions: 21

7. Time-Based Versus Condition-Based Maintenance 22

7.1 Frequently Asked Questions: 22

8. Maximum Allowable Verification Intervals 29

8.1 Maintenance Tests 29

8.1.1 Table of Maximum Allowable Verification Intervals 29
8.1.2 Additional Notes for Tables 1-1 through 1-5 and Table 3 31
8.1.3 Frequently Asked Questions: 33
8.2 Retention of Records 38
8.2.1 Frequently Asked Questions: 39
8.3 Basis for Table 1 Intervals 42
8.4 Basis for Extended Maintenance Intervals for Microprocessor Relays 43
9. Performance-Based Maintenance Process 46
9.1 Minimum Sample Size 47
9.2 Frequently Asked Questions: 49
10. Overlapping the Verification of Sections of the Protection System 64
10.1 Frequently Asked Question: 64
11. Monitoring by Analysis of Fault Records 65
11.1 Frequently Asked Question: 66
12. Importance of Relay Settings in Maintenance Programs 67
12.1 Frequently Asked Questions: 67
13. Self-Monitoring Capabilities and Limitations 70
13.1 Frequently Asked Question: 71
14. Notification of Protection System Failures 72
15. Maintenance Activities 73
15.1 Protective Relays (Table 1-1) 73
15.1.1 Frequently Asked Question: 73
15.2 Voltage & Current Sensing Devices (Table 1-3) 73
15.2.1 Frequently Asked Questions: 75
15.3 Control circuitry associated with protective functions (Table 1-5) 76

15.3.1 Frequently Asked Questions: 79

15.4 Batteries and DC Supplies (Table 1-4) 80

15.4.1 Frequently Asked Questions: 81

15.5 Associated communications equipment (Table 1-2) 95

15.5.1 Frequently Asked Questions: 96

15.6 Alarms (Table 2) 99

15.6.1 Frequently Asked Questions: 100

15.7 Distributed UFLS and UVLS Systems (Table 3) 100

15.8 Examples of Evidence of Compliance 102

15.8.1 Frequently Asked Questions: 102

References 104

Figures 105

Figure 1: Typical Transmission System 105

Figure 2: Typical Generation System 106

Figure 1 & 2 Legend – Components of Protection Systems 108

Appendix A 109

Appendix B ..... **Error! Bookmark not defined.**

1. Introduction and Summary

Note: This supplementary reference to PRC-005-2 is neither mandatory nor enforceable.

~~1. Introduction and Summary~~

NERC currently has four Reliability Standards that are mandatory and enforceable in the United States and address various aspects of maintenance and testing of Protection and Control systems.
These standards are:

PRC-005-1 — Transmission and Generation Protection System Maintenance and Testing

PRC-008-0 — Underfrequency Load Shedding Equipment Maintenance Programs

PRC-011-0 — UVLS System Maintenance and Testing

PRC-017-0 — Special Protection System Maintenance and Testing

While these standards require that applicable entities have a maintenance program for Protection Systems, and that these entities must be able to demonstrate they are carrying out such a program, there are no specifics regarding the technical requirements for Protection System maintenance programs. Furthermore, FERC Order 693 directed additional modifications respective to Protection System maintenance programs. PRC-005-2 combines and replaces PRC-005, PRC-008, PRC-011 and PRC-017.

2. Need for Verifying Protection System Performance

Protective relays have been described as silent sentinels, and do not generally demonstrate their performance until a fault or other power system problem requires that they operate to protect power system elements, or even the entire Bulk Electric System (BES). Lacking faults, switching operations or system problems, the Protection Systems may not operate, beyond static operation, for extended periods. A misoperation - a false operation of a Protection System or a failure of the Protection System to operate, as designed, when needed - can result in equipment damage, personnel hazards, and wide area disturbances or unnecessary customer outages. Maintenance or testing programs are used to determine the performance and availability of Protection Systems.

Typically, utilities have tested Protection Systems at fixed time intervals, unless they had some incidental evidence that a particular Protection System was not behaving as expected. Testing practices vary widely across the industry. Testing has included system functionality, calibration of measuring devices, and correctness of settings. Typically, a Protection System must be visited at its installation site and, in many cases, removed from service for this testing.

Fundamentally, a Reliability Standard for Protection System Maintenance and Testing requires the performance of the maintenance activities that are necessary to detect and correct plausible age and service related degradation of the Protection System components such that a properly built and commissioned Protection System will continue to function as designed over its service life.

Similarly station batteries which are an important part of the station dc supply are not called upon to provide instantaneous dc power to the Protection System until power is required by the Protection System to operate circuit breakers or interrupting devices to clear faults or to isolate equipment.

2.1 Existing NERC Standards for Protection System Maintenance and Testing

For critical BES protection functions, NERC Standards have required that each utility or asset owner define a testing program. The starting point is the existing Standard PRC-005, briefly restated as follows:

Purpose: To document and implement programs for the maintenance of all Protection Systems affecting the reliability of the Bulk Electric System (BES) so that these Protection Systems are kept in working order.

PRC-005-1 is not specific on where the boundaries of the Protection Systems lie. However, the definition of Protection System in the NERC Glossary of Terms used in Reliability Standards indicates what must be included as a minimum.

At the beginning of the project to develop PRC-005-2, the definition of Protection System was:

Protective relays, associated communications systems, voltage and current sensing devices, station batteries and dc control circuitry.

Applicability: Owners of generation and transmission Protection Systems.

Requirements: The owner shall have a documented maintenance program with test intervals. The owner must keep records showing that the maintenance was performed at the specified intervals.

2.2 Protection System Definition

The most recently approved definition of Protection Systems is:

- Protective relays which respond to electrical quantities,
- communications systems necessary for correct operation of protective functions,
- voltage and current sensing devices providing inputs to protective relays,
- station dc supply associated with protective functions (including station batteries, battery chargers, and non-battery-based dc supply), and
- control circuitry associated with protective functions through the trip coil(s) of the circuit breakers or other interrupting devices.

2.3 Applicability of New Protection System Maintenance Standards

The BES purpose is to transfer bulk power. The applicability language has been changed from the original PRC-005:

"...affecting the reliability of the Bulk Electric System (BES)…"

To the present language:

"…that are installed for the purpose of detecting faults on BES Elements (lines, buses, transformers, etc.)."

The drafting team intends that this Standard will follow with any definition of the Bulk Electric System. There should be no ambiguity; if the element is a BES element then the Protection System protecting that element should then be included within this Standard. If there is regional variation to the definition then there will be a corresponding regional variation to the Protection Systems that fall under this Standard.

There is no way for the Standard Drafting Team to know whether a specific 230KV line, 115KV line (even 69KV line), for example, should be included or excluded. Therefore, the team set the clear intent that the Standard language should simply be applicable to ~~relays~~Protection Systems for BES elements.

The BES is a NERC defined term that, from time to time, may undergo revisions. Additionally, there may even be regional variations that are allowed in the present and future definitions. See the NERC glossary of terms for the present, in-force, definition. See the applicable regional reliability organization for any applicable allowed variations.

While this Standard will undergo revisions in the future, this Standard will not attempt to keep up with revisions to the NERC definition of BES but rather simply make BES Protection Systems applicable.

The Standard is applied to Generator Owners (GO) and Transmission Owners (TO) because GO's and TO's have equipment that is BES equipment. The Standard brings in Distribution Providers (DP) because depending on the station configuration of a particular substation, there may be Protection System equipment installed at a non-transmission voltage level (Distribution Provider equipment) that is wholly or partially installed to protect the BES. PRC-005-2 would apply to this equipment. An example is underfrequency load-shedding, which is frequently applied well down into the distribution system to meet PRC-007-0.

As this Standard is intended to replace the existing PRC-005, PRC-008, PRC-011 and PRC-017, those Standards are used in the construction of this revision of PRC-005-1. Much of the original intent of those Standards was carried forward whenever it was possible to continue the intent without a disagreement with FERC Order 693. For example the original PRC-008 was constructed quite differently than the original PRC-005. The drafting team agrees with the intent of this and notes that distributed tripping schemes would have to exhibit multiple failures to trip before they would prove to be significant as opposed to a single failure to trip of, for example, a Transmission Protection System Bus Differential lock-out relay. While many failures of these distribution breakers could add up to be significant, it is also believed that distribution breakers are operated often on just fault clearing duty and therefore the distribution circuit breakers are operated at least as frequently as any requirements that might have appeared in this Standard.

Additionally, since this Standard will now replace PRC-011 it will be important to make the distinction between under-voltage Protection Systems that protect individual loads and Protection Systems that are UVLS schemes that protect the BES. Any UVLS scheme that had been applicable under PRC-011 will now be applicable under this revision of PRC-005-1. An example of an Under-Voltage Load Shedding scheme that is not applicable to this Standard is one in which the tripping action was intended to prevent low distribution voltage to a specific load from a transmission system that was intact except for the line that was out of service, as opposed to preventing a cascading outage or transmission system collapse.

It had been correctly noted that the devices needed for PRC-011 are the very same types of devices needed in PRC-005.

Thus a Standard written for Protection Systems of the BES can easily make the needed requirements for Protection Systems and replace some other Standards at the same time.

2.3.1 Frequently Asked Questions:

What, exactly, is the BES, or Bulk Electric System?

BES is the abbreviation for Bulk Electric System. BES is a term in the Glossary of Terms used in Reliability Standards, and is not being modified within this draft Standard.
NERC's approved definition of Bulk Electric System is:

As defined by the Regional Reliability Organization, the electrical generation resources, transmission lines, interconnections with neighboring systems, and associated equipment, generally operated at voltages of 100 kV or higher. Radial transmission facilities serving only load with one transmission source are generally not included in this definition.

The BES definition is presently undergoing revision.

Each Regional Entity implements a definition of the Bulk Electric System that is based on this NERC definition, in some cases, supplemented by additional criteria. These regional definitions have been documented and provided to FERC as part of a *June 14, 2007 Informational Filing*.

Why is Distribution Provider included within the Applicable Entities and as a responsible entity within several of the requirements? Wouldn't anyone having relevant facilities be a Transmission Owner?

Depending on the station configuration of a particular substation, there may be Protection System equipment installed at a non-transmission voltage level (Distribution Provider equipment) that is wholly or partially installed to protect the BES. PRC-005-2 would apply to this equipment. An example is underfrequency load-shedding, which is frequently applied well down into the distribution system to meet PRC-007-0.

We have an Under Voltage Load Shedding (UVLS) system in place that prevents one of our distribution substations from supplying extremely low voltage in the case of a specific transmission line outage. The transmission line is part of the BES. Does this mean that our UVLS system falls within this Standard?

The situation as stated indicates that the tripping action was intended to prevent low distribution voltage to a specific load from a transmission system that was intact except for the line that was out of service, as opposed to preventing cascading outage or transmission system collapse.

This Standard is not applicable to this UVLS.

We have a UFLS or UVLS scheme that sheds the necessary load through distribution-side circuit breakers and circuit reclosers. Do the trip-test requirements for circuit breakers apply to our situation?

No. Distributed tripping schemes would have to exhibit multiple failures to trip before they would prove to be significant as opposed to a single failure to trip of, for example, a Transmission Protection System Bus Differential lock-out relay. While many failures of these distribution breakers could add up to be significant, it is also believed that distribution breakers are operated often on just fault clearing duty and therefore the distribution circuit breakers are operated at least as frequently as any requirements that might have appeared in this Standard.

We have a UFLS scheme that, in some locales, sheds the necessary load through non-BES circuit breakers and occasionally even circuit switchers. Do the trip-test requirements for circuit breakers apply to our situation?

If your "non-BES circuit breaker" has been brought into this standard by the inclusion of UFLS requirements and otherwise would not have been brought into this standard, then the answer is that there are no trip-test requirements. For these devices that are otherwise non-BES assets, these tripping schemes would have to exhibit multiple failures to trip before they would prove to be as significant as (for example) a single failure to trip of a Transmission Protection System Bus Differential lock-out relay.

2.4 Applicable Relays

The NERC Glossary definition has a Protection System including relays, dc supply, current and voltage sensing devices, dc control circuitry and associated communications circuits. The relays to which this Standard applies are those protective relays that respond to electrical quantities and provide a trip output to trip coils, dc control circuitry or associated communications equipment. This definition extends to IEEE device # 86 (lockout relay) and IEEE device # 94 (tripping or trip-free relay) as these devices are tripping relays that respond to the trip signal of the protective relay that processed the signals from the current and voltage sensing devices.

Relays that respond to non-electrical inputs or impulses (such as, but not limited to, vibration, pressure, seismic, thermal or gas accumulation) are not included.

2.4.1 Frequently Asked Questions:

Are power circuit reclosers, reclosing relays, closing circuits and auto-restoration schemes covered in this Standard?

No. ~~As stated in Requirement R1,~~ This Standard covers protective relays that use electrical quantity measurements ~~of electrical quantities~~ to determine anomalies and to trip a portion of the BES. Reclosers, reclosing relays, closing circuits and auto-restoration schemes are used to cause devices to close as opposed to electrical-measurement relays and their associated circuits that cause circuit interruption from the BES; such closing devices and schemes are more appropriately covered under other NERC Standards. There is one notable exception: since PRC-017 will be superseded by PRC-005-2, then if a Special Protection System (previously covered by PRC-017) incorporates automatic closing of breakers, then the SPS related closing devices ~~are part of the SPS and~~ must be tested accordingly.

I use my protective relays only as sources of metered quantities and breaker status for SCADA and EMS through a substation distributed RTU or data concentrator to the control center. What are the maintenance requirements for the relays?

This Standard addresses ~~only devices "~~Protection Systems that are ~~applied on, or are designed to provide protection~~installed for the purpose of detecting Faults on BES~~."~~ Elements (lines, buses, transformers, etc.) Protective relays, providing only the functions mentioned in the question, are not included.

Is a Sudden Pressure Relay an auxiliary tripping relay?

No. IEEE C37.2-2008 assigns the device number 94 to auxiliary tripping relays. Sudden pressure relays are assigned device number 63. Sudden pressure relays are presently excluded from the Standard because it does not utilize voltage and/or current measurements to determine anomalies. Devices that use anything other than electrical detection means are excluded. The trip path from a sudden pressure device is a part of the Protection System control circuitry. The sensing element is omitted from PRC-005-2 testing requirements because the SDT is unaware of industry recognized testing protocol for the sensing elements. The SDT believes that Protection Systems that trip (or can trip) the BES should be included. This position is consistent

with the currently-approved PRC-005-1a, consistent with the SAR for Project 2007-17, and understands this to be consistent with the position of FERC staff.

My mechanical device does not operate electrically and does not have calibration settings; what maintenance activities apply?

You must conduct a test(s) to verify the integrity of ~~the~~any trip circuit that is a part of a Protection System. This Standard does not cover circuit breaker maintenance or transformer maintenance. The Standard also does not presently cover testing of devices such as sudden pressure relays (63), temperature relays (49), and other relays which respond to mechanical parameters rather than electrical parameters. There is an expectation that fault pressure relays and other non-electrically initiated devices may become part of some maintenance standard. This Standard presently covers trip paths. It might seem incongruous to test a trip path without a present requirement to test the device and thus be arguably more work for nothing. But, one simple test to verify the integrity of such a trip path could be (but is not limited to) a voltage presence test as a dc voltage monitor might do if it were installed monitoring that same circuit.

The Standard specifically mentions auxiliary and lock-out relays; what is an auxiliary tripping relay?

An auxiliary relay, IEEE Device Number 94, is described in IEEE Standard C37.2-2008 as "A device that functions to trip a circuit breaker, contactor, or equipment; to permit immediate tripping by other devices; or to prevent immediate reclosing of a circuit interrupter if it should open automatically, even though its closing circuit is maintained closed."

What is a lock-out relay?

A lock-out relay, IEEE Device Number 86, is described in IEEE Standard C37.2 as "A device that trips and maintains the associated equipment or devices inoperative until it is reset by an operator, either locally or remotely."

3. Protection Systems Product Generations

The likelihood of failure and the ability to observe the operational state of a critical Protection System, both depends on the technological generation of the relays as well as how long they have been in service. Unlike many other transmission asset groups, protection and control systems have seen dramatic technological changes spanning several generations. During the past 20 years, major functional advances are primarily due to the introduction of microprocessor technology for power system devices such as primary measuring relays, monitoring devices, control systems, and telecommunications equipment.

Modern microprocessor based relays have six significant traits that impact a maintenance strategy:

- Self monitoring capability - the processors can check themselves, peripheral circuits, and some connected substation inputs and outputs such as trip coil continuity. Most relay users are aware that these relays have self monitoring, but are not focusing on exactly what internal functions are actually being monitored. As explained further below, every element critical to the Protection System must be monitored, or else verified periodically.
- Ability to capture fault records showing how the Protection System responded to a fault in its zone of protection, or to a nearby fault for which it is required not to operate.
- Ability to meter currents and voltages, as well as status of connected circuit breakers, continuously during non-fault times. The relays can compute values such as MW and MVAR line flows that are sometimes used for operational purposes such as SCADA.
- Data communications via ports that provide remote access to all of the results of Protection System monitoring, recording, and measurement.
- Ability to trip or close circuit breakers and switches through the Protection System outputs, on command from remote data communications messages or from relay front panel button requests.
- Construction from electronic components some of which have shorter technical life or service life than electromechanical components of prior Protection System generations.

There have been significant advances in the technology behind the other components of Protection Systems. Microprocessors are now a part of Battery Chargers, Associated Communications Equipment, Voltage and Current Measuring Devices and even the control circuitry (in the form of software-latches replacing lock-out relays, etc).

Any Protection System component can have self-monitoring and alarming capability, not just relays. Because of this technology, extended time intervals can find their way into all components of the Protection System.

This standard also recognizes the distinct advantage of using advanced technology to justifiably defer or even eliminate traditional maintenance. Just as a hand-held calculator does not require routine testing and calibration, neither does a calculation buried in a microprocessor-based device that results in a "lock-out". Thus the software-latch 86 that replaces an electro-mechanical 86 does not require routine trip testing. Any trip circuitry associated with the "soft 86" would still need applicable verification activities performed but the actual "86" does not have to be "electrically operated" or even toggled.

4. Definitions

Protection System Maintenance Program (PSMP) — An ongoing program by which Protection System components are kept in working order and proper operation of malfunctioning components is restored. A maintenance program for a specific component includes one or more of the following activities:

- Verify — Determine that the component is functioning correctly.
- Monitor — Observe the routine in-service operation of the component.
- Test — Apply signals to a component to observe functional performance or output behavior, or to diagnose problems.
- Inspect — Detect visible signs of component failure, reduced performance and degradation.
- Calibrate — Adjust the operating threshold or measurement accuracy of a measuring element to meet the intended performance requirement.
- ~~Restore — Return malfunctioning components to proper operation.~~

4.1 Frequently Asked Questions:

Why does PRC-005-2 not specifically require maintenance and testing procedures as reflected in the previous Standard, PRC-005-1?

PRC-005-1 does not require detailed maintenance and testing procedures, but instead requires summaries of such procedures, and is not clear on what is actually required. PRC-005-2 requires a documented maintenance program, and is focused on establishing requirements rather than

prescribing methodology to meet those requirements. Between the activities identified in the tables 1-1 through 1-5 Table 2 and Table ~~2~~3 (collectively the "Tables"), and the various components of the definition established for a "Protection System Maintenance Program", PRC-005-2 establishes the activities and time-basis for a Protection System Maintenance Program to a level of detail not previously required.

Please clarify what is meant by restore in the definition of maintenance.

The description of "Restore" in the definition of a Protection System Maintenance Program, addresses corrective activities necessary to assure that the component is returned to working order following the discovery of its failure or malfunction. The Maintenance Activities specified in the Tables do not present any requirements related to Restoration; ~~R3~~R5 of the Standard does require that the entity "~~initiate resolution of~~shall demonstrate efforts to correct any identified unresolved maintenance issues". Some examples of restoration (or correction of maintenance-correctable issues) include, but are not limited to, replacement of capacitors in distance relays to bring them to working order; replacement of relays, or other Protection System components, to bring the Protection System to working order; upgrade of electromechanical or solid-state protective relays to micro-processor based relays following the discovery of failed components. Restoration, as used in this context is not to be confused with Restoration rules as used in system operations. Maintenance activity necessarily includes both the detection of problems and the repairs needed to eliminate those problems. This Standard does not identify all of the Protection System problems that must be detected and eliminated, rather it is the intent of this Standard that an entity determines the necessary working order for their various devices and keeps them in working order. If an equipment item is repaired or replaced then the entity can restart the maintenance-time-interval-clock if desired, however the replacement of equipment does not remove any documentation requirements that would have been required to verify compliance with time-interval requirements; in other words do not discard maintenance data that goes to verify your work.

The retention of documentation for new and/or replaced equipment is all about proving that the maintenance intervals had been in compliance. For example, a long range plan of upgrades might lead an entity to ignore required maintenance; retaining the evidence of prior maintenance that existed before any retirements and upgrades proves compliance with the Standard.

Please clarify what is meant by "...demonstrate efforts to correct an unresolved maintenance issue..."; why not measure the completion of the corrective action?

Management of completion of the identified unresolved maintenance issue is a complex topic that falls outside of the scope of this standard. There can be any number of supply, process and management problems that make setting repair deadlines impossible. The SDT specifically chose the phrase "demonstrate efforts to correct" (with guidance from NERC Staff) because of the concern that many more complex unresolved maintenance issues might require greater than the remaining maintenance interval to resolve (and yet still be a "closed-end process"). For example, a problem might be identified on a VRLA battery during a 6 month check. In instances such as one that requiring battery replacement as part of the long term resolution, it

is highly unlikely that the battery could be replaced in time to meet the 6 calendar month requirement for this maintenance activity. The SDT does not believe entities should be found in violation of a maintenance program requirement because of the inability to complete a remediation program within the original maintenance interval. The SDT does believe corrective actions should be timely but concludes it would be impossible to postulate all possible remediation projects and therefore, impossible to specify bounding time frames for resolution of all possible unresolved maintenance issues or what documentation might be sufficient to provide proof that effective corrective action is being undertaken.

5. Time-Based Maintenance (~~TBM~~TMB) Programs

Time-based maintenance is the process in which Protection Systems are maintained or verified according to a time schedule. The scheduled program often calls for technicians to travel to the physical site and perform a functional test on Protection System components. However, some components of a TBM program may be conducted from a remote location - for example, tripping a circuit breaker by communicating a trip command to a microprocessor relay to determine if the entire Protection System tripping chain is able to operate the breaker. Similarly, all Protection System components can have the ability to remotely conduct tests, either on-command or routinely, the running of these tests can extend the time interval between hands-on maintenance activities.

5.1 Maintenance Practices

Maintenance and testing programs often incorporate the following types of maintenance practices:

- TBM – time-based maintenance – externally prescribed maximum maintenance or testing intervals are applied for components or groups of components. The intervals may have been developed from prior experience or manufacturers' recommendations. The TBM verification interval is based on a variety of factors, including experience of the particular asset owner, collective experiences of several asset owners who are members of a country or regional council, etc. The maintenance intervals are fixed, and may range in number of months or in years.

  TBM can include review of recent power system events near the particular terminal. Operating records may verify that some portion of the Protection System has operated correctly since the last test occurred. If specific protection scheme components have demonstrated correct performance within specifications, the maintenance test time clock can be reset for those components.

- PBM – Performance-Based Maintenance - intervals are established based on analytical or historical results of TBM failure rates on a statistically significant population of similar components. Some level of TBM is generally followed. Statistical analyses accompanied by adjustments to maintenance intervals are used to justify continued use of PBM-developed extended intervals when test failures or in-service failures occur infrequently.

- CBM – condition-based maintenance – continuously or frequently reported results from non-disruptive self monitoring of components demonstrate operational status as those components remain in service. Whatever is verified by CBM does not require manual testing, but taking advantage of this requires precise technical focus on exactly what parts are included as part of the self diagnostics. While the term "Condition-Based-Maintenance" (CBM) is no longer used within the Standard itself, it is important to note that the concepts of CBM are a part of the Standard (in the form of extended time intervals through status-monitoring). These extended time intervals are only allowed (in the absence of PBM) if the condition of the device is monitored (CBM). As a

consequence of the "monitored-basis-time-intervals" existing within the Standard the explanatory discussions within this Supplementary Reference concerned with CBM will remain in this reference and are discussed as CBM.

Microprocessor based Protection System components that perform continuous self-monitoring verify correct operation of most components within the device. Self-monitoring capabilities may include battery continuity, float voltages, unintentional grounds, the ac signal inputs to a relay, analog measuring circuits, processors and memory for measurement, protection, and data communications, trip circuit monitoring, and protection or data communications signals (and many, many more measurements). For those conditions, failure of a self-monitoring routine generates an alarm and may inhibit operation to avoid false trips. When internal components, such as critical output relay contacts, are not equipped with self-monitoring, they can be manually tested. The method of testing may be local or remote, or through inherent performance of the scheme during a system event.

The TBM is the overarching maintenance process of which the other types are subsets. Unlike TBM, PBM intervals are adjusted based on good or bad experiences. The CBM verification intervals can be hours or even milliseconds between non-disruptive self monitoring checks within or around components as they remain in service.

TBM, PBM, and CBM can be combined for individual components, or within a complete Protection System. The following diagram illustrates the relationship between various types of maintenance practices described in this section. In the Venn diagram the overlapping regions show the relationship of TBM with PBM historical information and the inherent continuous monitoring offered through CBM.

This figure shows:

- Region 1: The TBM intervals that are increased based on known reported operational condition of individual components that are monitoring themselves.
- Region 2: The TBM intervals that are adjusted up or down based on results of analysis of maintenance history of statistically significant population of similar products that have been subject to TBM.
- Region 3: Optimal TBM intervals based on regions 1 and 2.

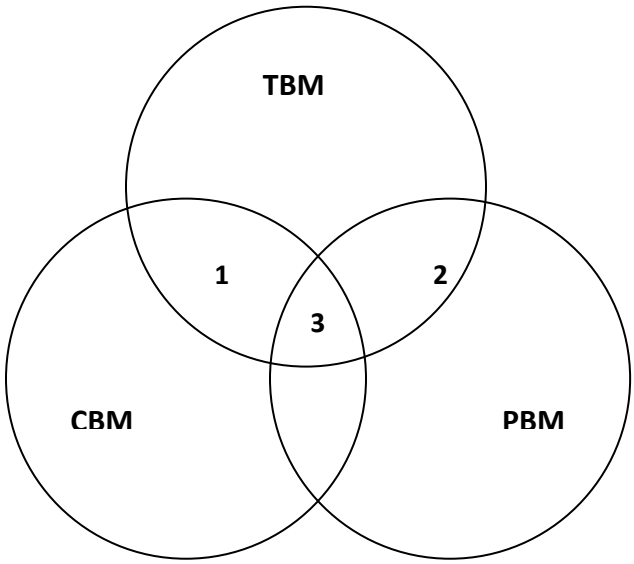

Relationship of time-based maintenance types

5.1.1 Frequently Asked Questions:

The Standard seems very complicated, and is difficult to understand. Can it be simplified?

Because the Standard is establishing parameters for condition-based Maintenance (R1) and Performance-Based Maintenance (R2) in addition to simple time-based Maintenance, it does appear to be complicated. At its simplest, an entity needs to ONLY perform time-based maintenance according to the unmonitored rows of the Tables. If an entity then wishes to take advantage of monitoring on its Protection System components and its available lengthened time intervals then it may, as long as the component has the listed monitoring attributes. If an entity wishes to use historical performance of its Protection System components to perform Performance-Based Maintenance, then R2 applies.

Please see the following diagram, which provides a "flow chart" of the Standard.

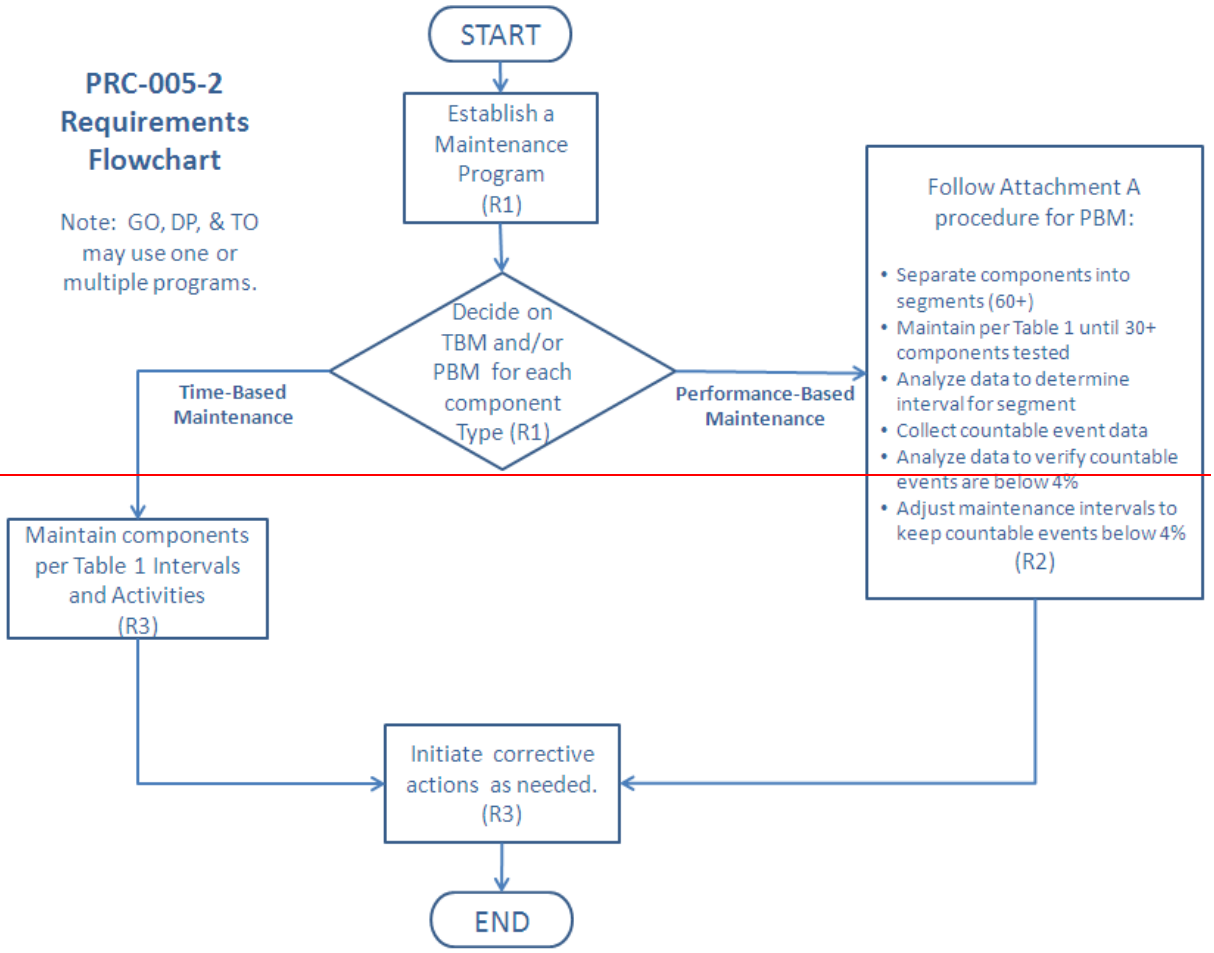
PRC-005-2 Requirements Flowchart
Note: GO, DP, & TO may use one or multiple programs.
START
Establish a Maintenance Program (R1)
Decide on TBM and/or PBM for each component Type (R1)
Time-Based Maintenance
Performance-Based Maintenance
Follow Attachment A procedure for PBM:
• Separate components into segments (60+)
• Maintain per Table 1 until 30+ components tested
• Analyze data to determine interval for segment
• Collect countable event data
• Analyze data to verify countable events are below 4%
• Adjust maintenance intervals to keep countable events below 4% (R2)
Maintain components per Table 1 Intervals and Activities (R3)
Initiate corrective actions as needed. (R3)
END

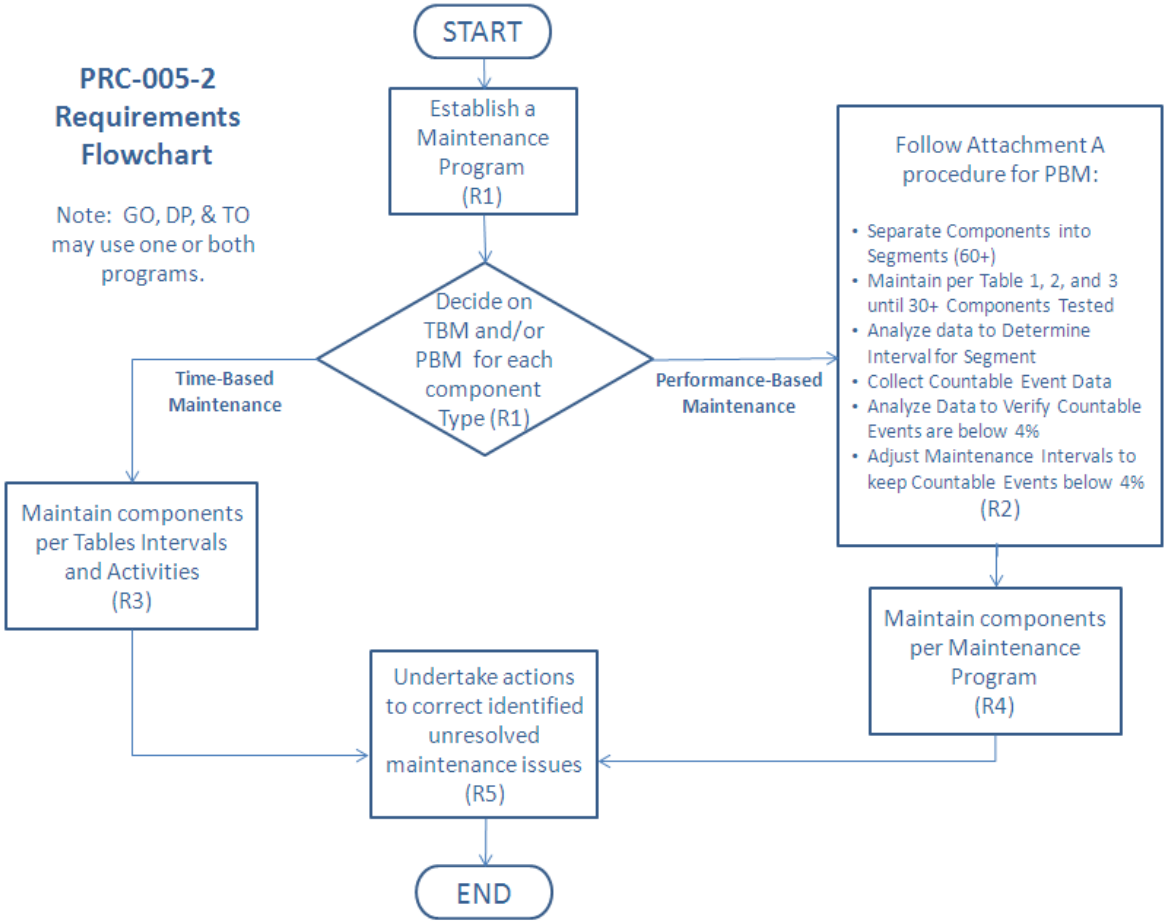

We have an electromechanical (unmonitored) relay that has a trip output to a lockout relay (unmonitored) which trips our transformer off-line by tripping the transformer's high-side and low-side circuit breakers. What testing must be done for this system?

This system is made up of components that are all unmonitored. Assuming a time-based Protection System maintenance program schedule (as opposed to a Performance-Based maintenance program), each component must be maintained per the most frequent hands-on activities listed in the Tables ~~1-1 through 1-5~~.

5.2 Extending Time-Based Maintenance

All maintenance is fundamentally time-based. Default time-based intervals are commonly established to assure proper functioning of each component of the Protection System, when data on the reliability of the components is not available other than observations from time-based maintenance. The following factors may influence the established default intervals:

- If continuous indication of the functional condition of a component is available (from relays or chargers or any self monitoring device), then the intervals may be extended or manual testing may be eliminated. This is referred to as condition-based maintenance or CBM. CBM is valid only for precisely the components subject to monitoring. In the case of microprocessor-based relays, self-monitoring may not include automated diagnostics of every component within a microprocessor.
- Previous maintenance history for a group of components of a common type may indicate that the maintenance intervals can be extended while still achieving the desired level of performance. This is referred to as Performance-Based Maintenance or PBM. It is also sometimes referred to as reliability-centered maintenance or RCM, but PBM is used in this document.
- Observed proper operation of a component may be regarded as a maintenance verification of the respective component or element in a microprocessor-based device. For such an observation, the maintenance interval may be reset only to the degree that can be verified by data available on the operation. For example, the trip of an electromechanical relay for a fault verifies the trip contact and trip path, but only through the relays in series that actually operated; one operation of this relay cannot verify correct calibration.

Excessive maintenance can actually decrease the reliability of the component or system. It is not unusual to cause failure of a component by removing it from service and restoring it. The improper application of test signals may cause failure of a component. For example, in electromechanical overcurrent relays, test currents have been known to destroy convolution springs.

In addition, maintenance usually takes the component out of service, during which time it is not able to perform its function. Cutout switch failures, or failure to restore switch position, commonly lead to protection failures.

5.2.1 Frequently Asked Question:

If I show the protective device out of service while it is being repaired then can I add it back as a new protective device when it returns? If not, my relay testing history would show that I was out of compliance for the last maintenance cycle.

The maintenance and testing requirements (~~R3~~R5) (in essence) state "…shall ~~implement and follow its PSMP …" if not then actions must be initiated~~demonstrate efforts to correct ~~the deviance.~~any identified unresolved maintenance issues. The type of corrective activity is not stated; however it could include repairs or replacements.

Your documentation requirements will increase, of course, to demonstrate that your device tested bad and had corrective actions initiated. Your regional entity could very well ask for documentation showing status of your corrective actions.

6. Condition-Based Maintenance (CBM) Programs

Condition-based maintenance is the process of gathering and monitoring the information available from modern microprocessor-based relays and other intelligent electronic devices (IEDs) that monitor Protection System elements. These devices generate monitoring information during normal operation, and the information can be assessed at a convenient location remote from the substation. The information from these relays and IEDs is divided into two basic types:

1. Information can come from background self-monitoring processes, programmed by the manufacturer, or by the user in device logic settings. The results are presented by alarm contacts or points, front panel indications, and by data communications messages.
2. Information can come from event logs, captured files, and/or oscillographic records for faults and disturbances, metered values, and binary input status reports. Some of these are available on the device front panel display, but may be available via data communications ports. Large files of fault information can only be retrieved via data communications. These results comprise a mass of data that must be further analyzed for evidence of the operational condition of the Protection System.

Using these two types of information, the user can develop an effective maintenance program carried out mostly from a central location remote from the substation. This approach offers the following advantages:

1. **Non-invasive Maintenance:** The system is kept in its normal operating state, without human intervention for checking. This reduces risk of damage, or risk of leaving the system in an inoperable state after a manual test. Experience has shown that keeping human hands away from equipment known to be working correctly enhances reliability.
2. **Virtually Continuous Monitoring:** CBM will report many hardware failure problems for repair within seconds or minutes of when they happen. This reduces the percentage of problems that are discovered through incorrect relaying performance. By contrast, a hardware failure discovered by TBM may have been there for much of the time interval between tests, and there is a good chance that some devices will show health problems by incorrect operation before being caught in the next test round. The frequent or continuous nature of CBM makes the effective verification interval far shorter than any required TBM maximum interval.

To use the extended time intervals available through Condition Based Maintenance simply look for the rows in the Tables that refer to monitored items.

6.1 Frequently Asked Questions:

My microprocessor relays and dc circuit alarms are contained on relay panels in a 24-hour attended control room. Does this qualify as an extended time interval condition-based (monitored) system?

Yes, provided the station attendant (plant operator, etc.) monitors the alarms and other indications (comparable to the monitoring attributes) and reports them within the given time limits that are stated in the criteria of the Tables.

When documenting the basis for inclusion of components into the appropriate levels of monitoring as per Requirement R1 (Part 1.4) of the Standard, is it necessary to provide this documentation about the device by listing of every component and the specific monitoring attributes of each device?

No. While maintaining this documentation on the device level would certainly be permissible, it is not necessary. Global statements can be made to document appropriate levels of monitoring for the entire population of a component type or portion thereof.

For example, it would be permissible to document the conclusion that all BES substation dc supply battery chargers are Monitored by stating the following within the program description:

> "All substation dc supply battery chargers are considered Monitored and subject to the rows for monitored equipment of Table 1-4 requirements as all substation dc supply battery chargers are equipped with dc voltage alarms and ground detection alarms that are sent to the manned control center."

Similarly, it would be acceptable to use a combination of a global statement and a device level list of exclusions. Example:

> "Except as noted below, all substation dc supply battery chargers are considered Monitored and subject to the rows for monitored equipment of Table 1-4 requirements as all substation dc supply battery chargers are equipped with dc voltage alarms and ground detection alarms that are sent to the manned control center. The dc supply battery chargers of Substation X, Substation Y, and Substation Z are considered Unmonitored and subject to the rows for unmonitored equipment in Table 1-4 requirements as they are not equipped with ground detection capability."

Regardless whether this documentation is provided by device listing of monitoring attributes, by global statements of the monitoring attributes of an entire population of component types, or by some combination of these methods, it should be noted that auditors may request supporting drawings or other documentation necessary to validate the inclusion of the device(s) within the appropriate level of monitoring. This supporting background information need not be maintained within the program document structure but should be retrievable if requested by an auditor.

7. Time-Based Versus Condition-Based Maintenance

Time-based and condition-based (or monitored) maintenance programs are both acceptable, if implemented according to technically sound requirements. Practical programs can employ a *combination of time-based and condition-based maintenance.* The Standard requirements introduce the concept of optionally using condition monitoring as a documented element of a maintenance program.

The Federal Energy Regulatory Commission (FERC), in its Order Number 693 Final Rule dated March 16, 2007 (18 CFR Part 40, Docket No. RM06-16-000) on Mandatory Reliability Standards for the Bulk-Power System, directed NERC to submit a modification to PRC-005-1 that includes a requirement that maintenance and testing of a Protection System must be carried out within a maximum allowable interval that is appropriate to the type of the Protection System and its impact on the reliability of the Bulk Power System. Accordingly, this Supplementary Reference Paper refers to the specific maximum allowable intervals in PRC-005-2. The defined time limits allow for longer time intervals if the maintained component is monitored.

A key feature of condition-based monitoring is that it effectively reduces the time delay between the moment of a protection failure and time the Protection System owner knows about it, for the monitored segments of the Protection System. In some cases, the verification is practically continuous - the time interval between verifications is minutes or seconds. Thus, technically sound, condition-based verification, meets the verification requirements of the FERC order even more effectively than the strictly time-based tests of the same system components.

The result is that:

This NERC Standard permits utilities to use a technically sound approach and to take advantage of remote monitoring, data analysis, and control capabilities of modern Protection Systems to reduce the need for periodic site visits and invasive testing of components by on-site technicians. This periodic testing must be conducted within the maximum time intervals specified in Tables 1-1 through 1-5 and Table 2 of PRC-005-2.

7.1 Frequently Asked Questions:

What is a Calendar Year?

Calendar Year - January 1 through December 31 of any year. As an example, if an event occurred on June 17, 2009 and is on a "One Calendar Year Interval", the next event would have to occur on or before December 31, 2010.

Please provide an example of "~~3~~4 Calendar Months".

If a maintenance activity is described as being needed every ~~3~~4 Calendar Months then it is performed in a (given) month and due again ~~3~~4 months later. For example a battery bank is inspected in month number 1 then it is due again ~~in~~before the end of the month ~~number 4~~number5. And specifically consider that you perform your battery inspection on January 3, 2010 then it must be inspected again before the end of ~~April~~May. Another example could be that a ~~3~~4-month inspection was performed in January is due in ~~April~~May, but if performed in March (instead of ~~April~~May) would still be due ~~three~~four months later therefore the activity is due again ~~June~~July. Basically every "~~3 Calendar~~4Calendar Months" means to add ~~3~~4 months from the last time the activity was performed.

Please provide an example of the unmonitored versus other levels of monitoring available?

An unmonitored Protection System has no monitoring and alarm circuits on the Protection System components. A Protection System component that has monitoring attributes but no alarm output connected is considered to be unmonitored.

A monitored Protection System or an individual monitored component of a Protection System has monitoring and alarm circuits on the Protection System components. The alarm circuits must alert, within 24 hours, a location wherein corrective action can be initiated. This location might be, but not limited to an Operations Center, Dispatch Office, Maintenance Center or even a portable SCADA system.

There can be a combination of monitored and unmonitored Protection Systems within any given scheme, substation or plant; there can also be a combination of monitored and unmonitored components within any given Protection System.

Example #1: A combination of monitored and unmonitored components within a given Protection System might be:

- A microprocessor relay with an internal alarm connected to SCADA to alert 24-hr staffed operations center; it has internal self diagnosis and alarming. (monitored)
- Instrumentation transformers, with no monitoring, connected as inputs to that relay. (unmonitored)
- A Vented Lead-Acid battery with a low voltage alarm for the station dc supply voltage and an unintentional grounds detection alarm connected to SCADA. (monitoring varies)
- A circuit breaker with a trip coil and the trip circuit is not monitored. (unmonitored)

Given the particular components and conditions, and using Table 1 and Table 2 , the particular components have maximum activity intervals of:

Every ~~3~~4 calendar months, ~~verify~~inspect:

- Electrolyte level (station dc supply voltage and unintentional ground detection is being maintained more frequently by the monitoring system).

Every 18 calendar months, verify/inspect the following:

- Battery bank ohmic values to station battery baseline (if performance tests are not opted)
- Battery charger float voltage
- Battery rack integrity
- Cell condition of all individual battery cells (where visible)
- Battery continuity
- Battery terminal connection resistance
- Battery cell-to-cell resistance (where available to measure)

Every 6 calendar years, perform/verify the following:

- Battery performance test (if internal ohmic tests are not opted)
- Verify that each trip coil is able to operate the circuit breaker, interrupting device, or mitigating device
- For electromechanical lock-out relays~~ and auxiliary relays~~, electrical operation of electromechanical trip ~~ and auxiliary devices~~

Every 12 calendar years, verify the following:

- Microprocessor relay settings are as specified
- Operation of the microprocessor's relay inputs and outputs that are essential to proper functioning of the Protection System
- Acceptable measurement of power system input values seen by the microprocessor protective relay
- Verify that current and voltage signal values are provided to the protective relays
- Protection System component monitoring for the battery system signals are conveyed to a location where corrective action can be initiated
- The microprocessor relay alarm signals are conveyed to a location where corrective action can be initiated
- Verify all trip paths in the control circuitry associated with protective functions through the trip coil(s) of the circuit breakers or other interrupting devices
- Auxiliary outputs that are in the trip path shall be maintained as detailed in Table 1-5 of the standard under the 'Unmonitored control circuitry associated with protective functions" section'
- Auxiliary outputs not in a trip path (i.e. annunciation or DME input) are not required, by this Standard, to be checked.

Example #2: A combination of monitored and unmonitored components within a given Protection System might be:

- A microprocessor relay with integral alarm that is not connected to SCADA. (unmonitored)
- Current and voltage signal values, with no monitoring, connected as inputs to that relay. (unmonitored)
- A Vented Lead-Acid battery with a low voltage alarm for the station dc supply voltage and an unintentional grounds detection alarm connected to SCADA. (monitoring varies)
- A circuit breaker with a trip coil, with no circuits monitored. (unmonitored)

Given the particular components and conditions, and using the Table 1 ("Maximum Allowable Testing Intervals and Maintenance Activities") and Table 2 ("Alarming Paths and Monitoring"), the particular components have maximum activity intervals of:

Every ~~3~~4 calendar months, ~~verify~~inspect:

- Electrolyte level (Station dc supply voltage and unintentional ground detection is being maintained more frequently by the monitoring system)

Every 18 calendar months, verify/inspect the following:

- Battery bank ohmic values to station battery baseline (if performance tests are not opted)
- Battery charger float voltage
- Battery rack integrity
- Cell condition of all individual battery cells (where visible)
- Battery continuity
- Battery terminal connection resistance
- Battery cell-to-cell resistance (where available to measure)

Every 6 calendar years, verify/perform the following:

- Verify operation of the relay inputs and outputs that are essential to proper functioning of the Protection System
- Verify acceptable measurement of power system input values as seen by the relays
- Verify that each trip coil is able to operate the circuit breaker, interrupting device, or mitigating device
- For electromechanical lock-out relays~~ and auxiliary relays~~, electrical operation of electromechanical trip ~~ and auxiliary devices~~
- Battery performance test (if internal ohmic tests are not opted)

Every 12 calendar years, verify the following:

- ~~Verify that~~ Current and voltage signal values are provided to the protective relays

- ~~Verify that~~ Protection System component monitoring for the battery system signals are conveyed to a location where corrective action can be initiated
- ~~Verify~~ All trip paths in the control circuitry associated with protective functions through the trip coil(s) of the circuit breakers or other interrupting devices
- Auxiliary outputs that are in the trip path shall be maintained as detailed in Table 1-5 of the standard under the 'Unmonitored control circuitry associated with protective functions" section'
- Auxiliary outputs not in a trip path (i.e. annunciation or DME input) are not required, by this Standard, to be checked

Example #3: A combination of monitored and unmonitored components within a given Protection System might be:

- A microprocessor relay with alarm connected to SCADA to alert 24-hr staffed operations center; it has internal self diagnosis and alarms. (monitored)
- Current and voltage signal values, with monitoring, connected as inputs to that relay (monitored)
- Vented Lead-Acid battery without any alarms connected to SCADA (unmonitored)
- Circuit breaker with a trip coil, with no circuits monitored (unmonitored)

Given the particular components, conditions, and using the Table 1 ("Maximum Allowable Testing Intervals and Maintenance Activities") and Table 2 ("Alarming Paths and Monitoring"), the particular components shall have maximum activity intervals of:

Every ~~3~~4 calendar months, verify/inspect the following:

- Station dc supply voltage
- For unintentional grounds
- Electrolyte level

Every 18 calendar months, verify/inspect the following:

- Battery bank ohmic values to station battery baseline (if performance tests are not opted)
- Battery charger float voltage
- Battery rack integrity
- Battery continuity
- Battery terminal connection resistance
- Battery cell-to-cell resistance (where available to measure)
- ~~Cell~~ Condition of all individual battery cells (where visible)

Every 6 calendar years, perform/verify the following:

- Battery performance test (if internal ohmic tests are not opted)
- Verify that each trip coil is able to operate the circuit breaker, interrupting device, or mitigating device
- For electromechanical lock-out relays~~ and auxiliary relays~~, electrical operation of electromechanical trip ~~ and auxiliary devices~~

Every 12 calendar years, verify the following:

- The microprocessor relay alarm signals are conveyed to a location where corrective action can be taken
- Microprocessor relay settings are as specified
- Operation of the microprocessor's relay inputs and outputs that are essential to proper functioning of the Protection System
- Acceptable measurement of power system input values seen by the microprocessor protective relay
- Verify all trip paths in the control circuitry associated with protective functions through the trip coil(s) of the circuit breakers or other interrupting devices
- Auxiliary outputs that are in the trip path shall be maintained as detailed in Table 1-5 of the standard under the 'Unmonitored control circuitry associated with protective functions" section'
- Auxiliary outputs not in a trip path (i.e. annunciation or DME input) are not required, by this Standard, to be checked

Why do components have different maintenance activities and intervals if they are monitored?

The intent behind different activities and intervals for monitored equipment is to allow less frequent manual intervention when more information is known about the condition of Protection System components. Condition-Based Maintenance is a valuable asset to improve reliability.

Can all components in a Protection System be monitored?

No. For some components in a Protection System, monitoring will not be relevant. For example a battery will always need some kind of inspection.

We have a 30 year old oil circuit breaker with a red indicating lamp on the substation relay panel that is illuminated only if there is continuity through the breaker trip coil. There is no SCADA monitor or relay monitor of this trip coil. The line protection relay package that trips this circuit breaker is a microprocessor relay that has an integral alarm relay that will assert on a number of conditions that includes a loss of power to the relay. This alarm contact connects to our SCADA system and alerts our 24-hour operations center of relay trouble when the alarm contact closes. This microprocessor relay trips the circuit breaker only and does not monitor trip coil continuity or other things such as trip current. Are the components monitored or not? How often must I perform maintenance?

The protective relay is monitored and can be maintained every 12 years or when ~~a~~ an unresolved maintenance issue arises. The control circuitry can be maintained every 12 years. The circuit breaker trip coil(s) has to be electrically operated at least once every 6 years.

8. Maximum Allowable Verification Intervals

The Maximum Allowable Testing Intervals and Maintenance Activities show how CBM with newer device types can reduce the need for many of the tests and site visits that older Protection System components require. As explained below, there are some sections of the Protection System that monitoring or data analysis may not verify. Verifying these sections of the Protection Systems requires some persistent TBM activity in the maintenance program. However, some of this TBM can be carried out remotely - for example, exercising a circuit breaker through the relay tripping circuits using the relay remote control capabilities can be used to verify function of one tripping path and proper trip coil operation, if there has been no fault or routine operation to demonstrate performance of relay tripping circuits.

8.1 Maintenance Tests

Periodic maintenance testing is performed to ensure that the protection and control system is operating correctly after a time period of field installation. These tests may be used to ensure that individual components are still operating within acceptable performance parameters - this type of test is needed for components susceptible to degraded or changing characteristics due to aging and wear. Full system performance tests may be used to confirm that the total Protection System functions from measurement of power system values, to properly identifying fault characteristics, to the operation of the interrupting devices.

8.1.1 Table of Maximum Allowable Verification Intervals

Table 1 (collectively known as Table 1, individually called out as Tables 1-1 through 1-5), Table 2 and Table 3 in the Standard, ~~specifies~~specify maximum allowable verification intervals for various generations of Protection Systems and categories of equipment that comprise Protection Systems. The right column indicates maintenance activities required for each category.

The types of components are illustrated in Figures 1 and 2 at the end of this paper. Figure 1 shows an example of telecommunications-assisted ~~line~~transmission Protection System comprising substation equipment at each terminal and a telecommunications channel for relaying between the two substations. Figure 2 shows an example of a generation ~~station layout.~~Protection System. The various subsystems of a Protection System that need to be verified are shown.

Non-distributed UFLS, UVLS, and SPS are additional categories of Table 1 that are not illustrated in these figures. Non-distributed UFLS, UVLS and SPS all use identical equipment as Protection Systems in the performance of their functions and therefore have the same maintenance needs.

Distributed UFLS and UVLS systems, which use local sensing on the distribution system and trip co-located non-BES interrupting devices, are addressed in Table 3 with reduced maintenance activities.

While it is easy to associate protective relays to multiple levels of monitoring, it is also true that most of the components that can make up a Protection System can also have technological advancements that place them into higher levels of monitoring.

To use the Maintenance Activities and Intervals Tables from PRC-005-2:

- First find the Table associated with your component. The tables are arranged in the order of mention in the definition of Protection System;
    - Table 1-1 is for protective relays,
    - Table 1-2 is for the associated communications systems,
    - Table 1-3 is for current and voltage sensing devices,
    - Table 1-4 is for station dc supply and
    - Table 1-5 is for control circuits.~~ There is an additional table,~~
    - Table 2, ~~which brings~~is for alarms~~ into the maintenance arena~~; this was broken out to simplify the other tables.
    - ~~Table 3 presents the maintenance activities and intervals for protective relays, current and voltage sensing devices, station dc supply, and control circuitry for~~Table 3 is for components which make-up distributed UFLS and UVLS systems.
- Next look within that Table for your device and its degree of monitoring. The tables have different hands-on maintenance activities prescribed depending upon the degree to which you monitor your equipment. Find the maintenance activity that applies to the monitoring level that you have on your piece of equipment.
- This Maintenance activity is the minimum maintenance activity that must be documented.
- If your ~~PSMP (~~Performance Based Maintenance (PBM) plan ~~)~~ requires more activities then you must perform and document to this higher standard. (Note that this does not apply unless you utilize PBM.)
- After the maintenance activity is known, check the Maximum Maintenance Interval; this time is the maximum time allowed between hands-on maintenance activity cycles of this component.
- If your ~~PSMP (plan)~~Performance Based Maintenance plan requires activities more often than the Tables maximum then you must perform and document those activities to your more stringent standard. (Note that this does not apply unless you utilize PBM.)
- Any given component of a Protection System can be determined to have a degree of monitoring that may be different from another component within that same Protection System. For example, in a given Protection System it is possible for an entity to have a monitored protective relay and an unmonitored associated communications system;

this combination would require hands-on maintenance activity on the relay at least once every 12 years and attention paid to the communications system as often as every ~~3~~4 months.

- An entity does not have to utilize the extended time intervals made available by this use of condition-based monitoring. An easy choice to make is to simply utilize the unmonitored level of maintenance made available on each of the 5 Tables. While the maintenance activities resulting from this choice would require more maintenance man-hours, the maintenance requirements may be simpler to document and the resulting maintenance plans may be easier to create.

For each Protection System component, Table 1 shows maximum allowable testing intervals for the various degrees of monitoring. These degrees of monitoring, or levels, range from the legacy unmonitored through a system that is more comprehensively monitored.

It has been noted here that an entity may have a PSMP that is more stringent than PRC-005-2. There may be any number of reasons that an entity chooses a more stringent plan than the minimums prescribed within PRC-005-2, most notable of which is an entity using performance based maintenance methodology. ~~(Another reason for having a more stringent plan than is required could be a regional entity could have more stringent requirements.) Regardless of the rationale behind an entity's more stringent plan, it is incumbent upon them to perform the activities, and perform them at the stated intervals, of the entity's PSMP. A quality PSMP will help assure system reliability and adhering to any given PSMP should be the goal~~ If an entity has a Performance Based Maintenance program then that plan must be followed even if the plan proves to be more stringent than the minimums laid out in the Tables.

8.1.2 Additional Notes for Tables 1-1 through 1-5 and Table 3

1. For electromechanical relays, adjustment is required to bring measurement accuracy within the tolerance needed by the asset owner. Microprocessor relays with no remote monitoring of alarm contacts, etc, are unmonitored relays and need to be verified within the Table interval as other unmonitored relays but may be verified as functional by means other than testing by simulated inputs.

2. Microprocessor relays typically are specified by manufacturers as not requiring calibration, but acceptable measurement of power system input values must be verified (verification of the Analog to Digital [A/D] converters) within the Table intervals. The integrity of the digital inputs and outputs that are used as protective functions must be verified within the Table intervals.

3. Any Phasor Measurement Unit (PMU) function whose output is used in a Protection System or SPS (as opposed to a monitoring task) must be verified as a component in a Protection System.

4. In addition to verifying the circuitry that supplies dc to the Protection System, the owner must maintain the station dc supply. The most widespread station dc supply is the station battery and charger. Unlike most Protection System components physical inspection of station batteries for signs of component failure, reduced performance, and degradation are required to ensure that the station battery is reliable enough to deliver

dc power when required. IEEE Standards 450, 1188, and 1106 for Vented Lead-Acid, Valve-Regulated Lead-Acid, and Nickel-Cadmium batteries, respectively (which are the most commonly used substation batteries on the NERC BES) have been developed as an important reference source of maintenance recommendations. The Protection System owner might use the applicable IEEE recommended practice which contains information and recommendations concerning the maintenance, testing and replacement of its substation battery. However, the methods prescribed in these IEEE recommendations cannot be specifically required because they do not apply to all battery applications.

5. Aggregated small entities might distribute the testing of the population of UFLS/UVLS systems, and large entities will usually maintain a portion of these systems in any given year. Additionally, if relatively small quantities of such systems do not perform properly, it will not affect the integrity of the overall program. Thus these distributed systems have decreased requirements as compared to other Protection Systems.
6. Voltage & Current Sensing Device circuit input connections to the Protection System relays can be verified by (but not limited to) comparison of measured values on live circuits or by using test currents and voltages on equipment out of service for maintenance. The verification process can be automated or manual. The values should be verified to be as expected, (phase value and phase relationships are both equally important to verify).
7. "End-to-end test" as used in this Supplementary Reference is any testing procedure that creates a remote input to the local communications-assisted trip scheme. While this can be interpreted as a GPS-type functional test it is not limited to testing via GPS. Any remote scheme manipulation that can cause action at the local trip path can be used to functionally-test the dc Control Circuitry. A documented real-time trip of any given trip path is acceptable in lieu of a functional trip test. It is possible, with sufficient monitoring, to be able to verify each and every parallel trip path that participated in any given dc Control Circuit trip. Or, another possible solution is that a single trip path from a single monitored relay can be verified to be the trip path that successfully tripped during a real-time operation. The variations are only limited by the degree of engineering and monitoring that an entity desires to pursue.
8. A/D verification may use relay front panel value displays, or values gathered via data communications. Groupings of other measurements (such as vector summation of bus feeder currents) can be used for comparison if calibration requirements assure acceptable measurement of power system input values.
9. Notes 1-8 attempt to describe some testing activities; they do not represent the only methods to achieve these activities but rather some possible methods. Technological advances, ingenuity and/or industry accepted techniques can all be used to satisfy maintenance activity requirements; the Standard is technology and method neutral in most cases.

8.1.3 Frequently Asked Questions:

What is meant by "Verify that settings are as specified" maintenance activity in Table 1-1?

Verification of settings is an activity directed mostly towards microprocessor based relays. For relay maintenance departments that choose to test microprocessor based relays in the same manner as electromechanical relays are tested, the testing process sometimes requires that some specific functions be disabled. Later tests might enable the functions previously disabled but perhaps still other functions or logic statements were then masked out. It is imperative that, when the relay is placed into service, the settings in the relay be the settings that were intended to be in that relay or as the Standard states "…settings are as specified."

Many of the microprocessor based relays available today have software tools which provide this functionality and generate reports for this purpose.

For evidence or documentation of this requirement a simple recorded acknowledgement that the settings were checked to be as specified is sufficient.

The drafting team was careful not to require "…that the relay settings be correct…" because it was believed that this might then place a burden of proof that the specified settings would result in the correct intended operation of the interrupting device. While that is a noble intention, the measurable proof of such a requirement is immense. The intent is that settings of the component be as specified at the conclusion of maintenance activities, whether those settings may have "drifted" since the prior maintenance or whether changes were made as part of the testing process.

Are electromechanical relays included in the "Verify that settings are as specified" maintenance activity in Table 1-1?

Verification of settings is an activity directed towards the application of protection related functions of microprocessor based relays. Electromechanical relays require calibration verification by voltage and/or current injection, and thus the settings are verified during calibration activity. In the example of a time-overcurrent relay, a minor deviation in time dial, versus the settings, may be acceptable as long as the relay calibration is within accepted tolerances at the injected current amplitudes. A major deviation may require further investigation, as it could indicate a problem with the relay or an incorrect relay style for the application.

The verification of phase current and voltage measurements by comparison to other quantities seems reasonable. How, though, can I verify residual or neutral currents, or 3V0 voltages, by comparison, when my system is closely balanced?

Since these inputs are verified at commissioning, maintenance verification requires ensuring that phase quantities are as expected and that 3IO and 3VO quantities appear equal to or close to 0.

These quantities also may be verified by use of oscillographic records for connected microprocessor relays as recorded during system disturbances. Such records may compare to

similar values recorded at other locations by other microprocessor relays for the same event, or compared to expected values (from short circuit studies) for known fault locations.

What does this Standard require for testing an auxiliary tripping relay?

Table 1 and Table 3 requires that a trip test must verify that the auxiliary tripping relay(s) and/or lockout relay(s) which are directly in a trip path from the protective relay to the interrupting device trip coil operate(s) electrically. Auxiliary outputs not in a trip path (i.e. annunciation or DME input) are not required, by this Standard, to be checked.

Do I have to perform a full end-to-end test of a Special Protection System?

No. All portions of the SPS need to be maintained, and the portions must overlap, but the overall SPS does not need to have a single end-to-end test. In other words it may be tested in piecemeal fashion provided all of the pieces are verified.

What about SPS interfaces between different entities or owners?

As in all of the Protection System requirements, SPS segments can be tested individually thus minimizing the need to accommodate complex maintenance schedules.

What do I have to do if I am using a phasor measurement unit (PMU) as part of a Protection System or Special Protection System?

Any Phasor Measurement Unit (PMU) function whose output is used in a Protection System or Special Protection System (as opposed to a monitoring task) must be verified as a component in a Protection System.

How do I maintain a Special Protection System or relay sensing for non-distributed UFLS or UVLS Systems?

Since components of the SPS, UFLS, and UVLS are the same types of components as those in Protection Systems then these components should be maintained like similar components used for other Protection System functions. In many cases the devices for SPS, UFLS and UVLS are also used for other protective functions. The same maintenance activities apply with the exception that distributed systems (UFLS and UVLS) have fewer dc supply and control circuitry maintenance activity requirements.

For the testing of the output action, verification may be by breaker tripping, but may be verified in overlapping segments. For example an SPS that trips a remote circuit breaker might be tested by testing the various parts of the scheme in overlapping segments. Another method is to document the real-time tripping of an SPS scheme should that occur. Forced trip tests of circuit breakers (etc) that are a part of distributed UFLS or UVLS schemes are not required.

The established maximum allowable intervals do not align well with the scheduled outages for my power plant. Can I extend the maintenance to the next scheduled outage following the established maximum interval?

No. You must complete your maintenance within the established maximum allowable intervals in order to be compliant. You will need to schedule your maintenance during available outages to complete your maintenance as required, even if it means that you may do protective relay maintenance more frequently than the maximum allowable intervals. The maintenance intervals were selected with typical plant outages, among other things, in mind.

If I am unable to complete the maintenance as required due to a major natural disaster (hurricane, earthquake, etc), how will this affect my compliance with this Standard.

The Sanction Guidelines of the North American Electric Reliability Corporation effective January 15, 2008 provides that the Compliance Monitor will consider extenuating circumstances when considering any sanctions.

What if my observed testing results show a high incidence of out-of-tolerance relays, or, even worse, I am experiencing numerous relay misoperations due to the relays being out-of-tolerance?

The established maximum time intervals are mandatory only as a not-to-exceed limitation. The establishment of a maximum is measurable. But, any entity can choose to test some or all of their Protection System components more frequently (or, to express it differently, exceed the minimum requirements of the Standard). Particularly, if you find that the maximum intervals in the Standard do not achieve your expected level of performance, it is understandable that you would maintain the related equipment more frequently. A high incidence of relay Misoperations is in no one's best interest. ~~The BES and an entity's bottom line both suffer.~~

We believe that the 4-month interval between inspections is unneccessary, why can we not perform these inspections twice per year?

The standard drafting team ~~believes~~, through the comment process, has discovered that routine monthly inspections are not the norm. To align routine station inspections with other important inspections the 4-month interval was chosen. In lieu of station visits many activities can be accomplished with automated monitoring and alarming.

Our maintenance plan calls for us to perform routine protective relay tests every 3 years; if we are unable to achieve this schedule but we are able to complete the procedures in less than the Maximum Time Interval then are we in or out of compliance?

~~You are out of compliance. You must maintain your equipment to your stated intervals within your maintenance plan. The protective relays (and any Protection System component) cannot be tested at intervals that are longer than the maximum allowable interval stated in the Tables and yet you must conform to your own maintenance plan. Therefore you should design your maintenance plan such that it is not in conflict with the Minimum Activities and the Maximum Intervals. You then must maintain your equipment according to your maintenance plan. You will end up being compliant with both the Standard and your own plan.~~

According to R3, if you have a time-based maintenance program then you will be in violation of the standard only if you exceed the maximum maintenance intervals prescribed in the Tables. According to R4, if your device in question is part of a Performance Based Maintenance program then you will be in violation of the standard if you fail to meet your PSMP even if you do not exceed the maximum maintenance intervals prescribed in the Tables. The intervals in tables are associated with TBM and CBM; Attachment A is associated with PBM.

Please provide a sample list of devices or systems that must be verified in a generator, generator step-up transformer, and generator connected station auxiliary transformer to meet the requirements of this Maintenance Standard.

Examples of typical devices and systems that may directly trip the generator, or trip through a lockout relay may include but are not necessarily limited to:

- Fault protective functions, including distance functions, voltage-restrained overcurrent functions, or voltage-controlled overcurrent functions
- Loss-of-field relays
- Volts-per-hertz relays
- Negative sequence overcurrent relays
- Over voltage and under voltage protection relays
- Stator-ground relays
- Communications-based Protection Systems such as transfer-trip systems
- Generator differential relays
- Reverse power relays
- Frequency relays
- Out-of-step relays
- Inadvertent energization protection
- Breaker failure protection

For generator step up or generator-connected station auxiliary transformers, operation of any of the following associated protective relays frequently would result in a trip of the generating unit and, as such, would be included in the program:

- Transformer differential relays
- Neutral overcurrent relay
- Phase overcurrent relays

Relays which trip breakers serving station auxiliary loads such as pumps, fans, or fuel handling equipment, etc., need not be included in the program even if the loss of the those loads could result in a trip of the generating unit. Furthermore, relays which provide protection to secondary unit substation (SUS) or low switchgear transformers and relays protecting other downstream plant electrical distribution system components are not included in the scope of this program even if a trip of these devices might eventually result in a trip of the generating unit. For example, a thermal overcurrent trip on the motor of a coal-conveyor belt could eventually lead to the tripping of the generator, but it does not cause the trip.

In the case where a plant does not have a generator connected station service transformer such that it is normally fed from a system connected station service transformer, is it still the drafting team's intent to exclude the protection systems for these system connected auxiliary transformers from scope even when the loss

of the normal (system connected) station service transformer will result in a trip of a BES generating facility?

The SDT does not intend that the system-connected station auxiliary transformers be included in the Applicability. The generator-connected station service transformers are often connected to the generator bus directly without an interposing breaker; thus, the Protection Systems on these transformers will trip the generator as discussed in 4.2.5.1.

What is meant by "verify operation of the relay inputs and outputs that are essential to proper functioning of the Protection System?"

Any input or output (of the relay) that "affects the tripping" of the breaker is included in the scope of I/O of the relay to be verified. By "affects the tripping" one needs to realize that sometimes there are more Inputs and Outputs than simply the output to the trip coil. Many important protective functions include things like breaker fail initiation, zone timer initiation and sometimes even 52a/b contact inputs are needed for a protective relay to correctly operate.

Each input should be "picked up" or "turned on and off" and verified as changing state by the microprocessor of the relay. Each output should be "operated" or "closed and opened" from the microprocessor of the relay and the output should be verified to change state on the output terminals of the relay. One possible method of testing inputs of these relays is to "jumper" the needed dc voltage to the input and verify that the relay registered the change of state.

Electromechanical lock-out relays (86) ~~and auxiliary tripping relays (94)~~ (used to convey the tripping current to the trip coils) need to be electrically operated to prove the capability of the device to change state. These tests need to be accomplished at least every 6 years, unless PBM methodology is applied.

The contacts on the 86 or ~~94~~auxiliary tripping relays (94) that change state to pass on the trip current to a breaker trip coil need only be checked every twelve years with the control circuitry.

What is the difference between a distributed UFLS/UVLS and a non-distributed UFLS/UVLS scheme?

A distributed UFLS or UVLS scheme contains individual relays which make independent load shed decisions based on applied settings and localized voltage and/or current inputs. A distributed scheme may involve an enable/disable contact in the scheme and still be considered a distributed scheme. A non-distributed UFLS or UVLS scheme involves a system where there is some type of centralized measurement and load shed decision being made. A non-distributed UFLS/UVLS scheme is considered similar to an SPS scheme and falls under Table 1 for maintenance activities and intervals.

8.2 Retention of Records

PRC-005-1 describes a reporting or auditing cycle of one year and retention of records for three years. However, with a three year retention cycle, the records of verification for a Protection System might be discarded before the next verification, leaving no record of what was done if a Misoperation or failure is to be analyzed.

PRC-005-2 corrects this by requiring:

The Transmission Owner, Generator Owner, and Distribution Provider shall each retain documentation of the two most recent performances of each distinct maintenance activity for the Protection System components, or to the previous scheduled (on-site) audit date, whichever is longer.

This requirement assures that the documentation shows that the interval between maintenance cycles correctly meets the maintenance interval limits. The requirement is actually alerting the industry to documentation requirements already implemented by audit teams. Evidence of compliance bookending the interval shows interval accomplished instead of proving only your planned interval.

The SDT is aware that, in some cases, the retention period could be relatively long. But, the retention of documents simply helps to demonstrate compliance.

8.2.1 Frequently Asked Questions:

Please use a specific example to demonstrate the data retention requirements.

The data retention requirements are intended to allow the availability of maintenance records to demonstrate that the time intervals in your maintenance plan were upheld. For example: "Company A" has a maintenance plan that requires its electromechanical protective relays be tested~~, for routine scheduled tests,~~ every 3 calendar years with a maximum allowed grace period of an additional 18 months. This entity would be required to maintain its records of maintenance of its last two routine scheduled tests. Thus its test records would have a latest routine test as well as its previous routine test. The interval between tests is therefore provable to an auditor as being within "Company A's" stated maximum time interval of 4.5 years.

The intent is not to require three test results proving two time intervals, but rather have two test results proving the last interval. The drafting team contends that this minimizes storage requirements while still having minimum data available to demonstrate compliance with time intervals.

~~Realistically, the Standard is providing advanced notice of audit team documentation requests; this type of information has already been requested by auditors.~~

If an entity prefers to utilize Performance Based Maintenance then statistical data may well be retained for extended periods to assist with future adjustments in time intervals.

If an equipment item is replaced then the entity can restart the maintenance-time-interval-clock if desired, however the replacement of equipment does not remove any documentation requirements that would have been required to verify compliance with time-interval requirements; in other words do not discard maintenance data that goes to verify your work.

The retention of documentation for new and/or replaced equipment is all about proving that the maintenance intervals had been in compliance. For example, a long range plan of upgrades might lead an entity to ignore required maintenance; retaining the evidence of prior

maintenance that existed before any retirements and upgrades proves compliance with the Standard.

What does this Maintenance Standard say about commissioning? Is it necessary to have documentation in your maintenance history of the completion of commission testing?

This Standard does not establish requirements for commission testing. Commission testing includes all testing activities necessary to conclude that a facility has been built in accordance with design. While a thorough commission testing program would include, either directly or indirectly, the verification of all those Protection System attributes addressed by the maintenance activities specified in the Tables of PRC-005-2, verification of the adequacy of initial installation necessitates the performance of testing and inspections that go well beyond these routine maintenance activities. For example, commission testing might set baselines for future tests; perform acceptance tests and/or warranty tests; utilize testing methods that are not generally done routinely like staged-fault-tests.

However, many of the Protection System attributes which are verified during commission testing are not subject to age related or service related degradation and need not be re-verified within an ongoing maintenance program. Example – it is not necessary to re-verify correct terminal strip wiring on an ongoing basis.

PRC-005-2 assumes that thorough commission testing was performed prior to a Protection System being placed in service. PRC-005-2 requires performance of maintenance activities that are deemed necessary to detect and correct plausible age and service related degradation of components such that a properly built and commission tested Protection System will continue to function as designed over its service life.

It should be noted that commission testing frequently is performed by a different organization than that which is responsible for the ongoing maintenance of the Protection System. Furthermore, the commission testing activities will not necessarily correlate directly with the maintenance activities required by the Standard. As such, it is very likely that commission testing records will deviate significantly from maintenance records in both form and content and therefore, it is not necessary to maintain commission testing records within the maintenance program documentation.

Notwithstanding the differences in records, an entity would be wise to retain commissioning records to show a maintenance start date. (See below). An entity that requires that their commissioning tests have, at a minimum, the requirements of PRC-005-2 would help that entity prove time interval maximums by setting the initial time clock.

How do you determine the initial due date for maintenance?

The initial due date for maintenance should be based upon when a Protection System was tested. Alternatively, an entity may choose to use the date of completion of the commission testing of the Protection System component and the system was placed into service as the starting point in determining its first maintenance due dates. Whichever method is chosen, for newly installed Protection Systems the components should not be placed into service until minimum maintenance activities have taken place.

It is conceivable that there can be a (substantial) difference in time between the date of testing as compared to the date placed into service. The use of the "Calendar Year" language can help determine the next due date without too much concern about being non-compliant for missing test dates by a small amount (provided your dates are not already at the end of a year). However, if there is a substantial amount of time difference between testing and in-service dates then the testing date should be followed because it is the degradation of components that is the concern. While accuracy fluctuations may decrease when components are not energized there are cases when degradation can take place even though the device is not energized. Minimizing the time between commissioning tests and in-service dates will help.

If I miss two battery inspections four times out of 100 Protection System components on my transmission system, does that count as 2 percent or 8 percent when counting Violation Severity Level (VSL) for R3?

The entity failed to complete its scheduled program on two of its one hundred Protection System components which would equate to two percent for application to the VSL Table for Requirement R3. This VSL is written to compare missed components to total components. In this case 2 components out of 100 were missed or 2 %.

How do I achieve a "grace period" without being out of compliance?

According to R3, a strictly time-based maintenance program would only be in violation if the maximum time interval of the Tables is exceeded. The objective here is to create a time extension within your own PSMP that still does not violate the maximum time intervals stated in the standard. Remember that the maximum time intervals listed in the Tables cannot be extended.

For the purposes of this example, concentrating on just unmonitored protective relays,– Table 1-1 specifies a maximum time interval (between the mandated maintenance activities) of 6 calendar years. Your plan must ensure that your unmonitored relays are tested at least once every 6 calendar years. You could, within your PSMP, require that your unmonitored relays be tested every 4 calendar years with a maximum allowable time extension of 18 calendar months. This allows an entity to have deadlines set for the auto-generation of work orders but still have the flexibility in scheduling complex work schedules. This also allows for that 18 calendar months to act as a buffer, in effect a grace period within your PSMP, in the event of unforeseen events. You will note that this example of a maintenance plan interval has a planned time of 4 years; it also has a built-in time extension allowed within the PSMP and yet does not exceed the maximum time interval allowed by the Standard. So while there are no time extensions allowed beyond the Standard, an entity can still have substantial flexibility to maintain their Protection System components.

8.3 Basis for Table 1 Intervals

When developing the original *Protection System Maintenance – A Technical Reference* in 2007, the SPCTF collected all available data from Regional Entities (REs) on time intervals recommended for maintenance and test programs. The recommendations vary widely in categorization of relays, defined maintenance actions, and time intervals, precluding development of intervals by averaging. The SPCTF also reviewed the 2005 Report [2] of the IEEE Power System Relaying Committee Working Group I-17 (Transmission Relay System Performance Comparison). Review of the I-17 report shows data from a small number of utilities, with no company identification or means of investigating the significance of particular results.

To develop a solid current base of practice, the SPCTF surveyed its members regarding their maintenance intervals for electromechanical and microprocessor relays, and asked the members to also provide definitively-known data for other entities. The survey represented 470 GW of peak load, or 64% of the NERC peak load. Maintenance interval averages were compiled by weighting reported intervals according to the size (based on peak load) of the reporting

utility. Thus, the averages more accurately represent practices for the large populations of Protection Systems used across the NERC regions.

The results of this survey with weighted averaging indicate maintenance intervals of 5 years for electromechanical or solid state relays, and 7 years for unmonitored microprocessor relays.

A number of utilities have extended maintenance intervals for microprocessor relays beyond 7 years, based on favorable experience with the particular products they have installed. To provide a technical basis for such extension, the SPCTF authors developed a recommendation of 10 years using the Markov modeling approach from [1] as summarized in Section 8.4. The results of this modeling depend on the completeness of self-testing or monitoring. Accordingly, this extended interval is allowed by Table 1 only when such relays are monitored as specified in the attributes of monitoring contained in Tables 1-1 through 1-5 and Table 2. Monitoring is capable of reporting Protection System health issues that are likely to affect performance within the 10 year time interval between verifications.

It is important to note that, according to modeling results, Protection System availability barely changes as the maintenance interval is varied below the 10-year mark. Thus, reducing the maintenance interval does not improve Protection System availability. With the assumptions of the model regarding how maintenance is carried out, reducing the maintenance interval actually degrades Protection System availability.

8.4 Basis for Extended Maintenance Intervals for Microprocessor Relays

Table 1 allows maximum verification intervals that are extended based on monitoring level. The industry has experience with self-monitoring microprocessor relays that leads to the Table 1 value for a monitored relay as explained in Section 8.3. To develop a basis for the maximum interval for monitored relays in their *Protection System Maintenance – A Technical Reference*, the SPCTF used the methodology of Reference [1], which specifically addresses optimum routine maintenance intervals. The Markov modeling approach of [1] is judged to be valid for the design and typical failure modes of microprocessor relays.

The SPCTF authors ran test cases of the Markov model to calculate two key probability measures:

- Relay Unavailability - the probability that the relay is out of service due to failure or maintenance activity while the power system element to be protected is in service.
- Abnormal Unavailability - the probability that the relay is out of service due to failure or maintenance activity when a fault occurs, leading to failure to operate for the fault.

The parameter in the Markov model that defines self-monitoring capability is ST (for self test). ST = 0 if there is no self-monitoring; ST = 1 for full monitoring. Practical ST values are estimated to range from .75 to .95. The SPCTF simulation runs used constants in the Markov model that were the same as those used in [1] with the following exceptions:

Sn, Normal tripping operations per hour = 21600 (reciprocal of normal fault clearing time of 10 cycles)

Sb, Backup tripping operations per hour = 4320 (reciprocal of backup fault clearing time of 50 cycles)

Rc, Protected component repairs per hour = 0.125 (8 hours to restore the power system)

Rt, Relay routine tests per hour = 0.125 (8 hours to test a Protection System)

Rr, Relay repairs per hour = 0.08333 (12 hours to complete a Protection System repair after failure)

Experimental runs of the model showed low sensitivity of optimum maintenance interval to these parameter adjustments.

The resulting curves for Relay Unavailability and Abnormal Unavailability versus maintenance interval showed a broad minimum (optimum maintenance interval) in the vicinity of 10 years – the curve is flat, with no significant change in either unavailability value over the range of 9, 10, or 11 years. This was true even for a relay Mean Time between Failures (MTBF) of 50 years, much lower than MTBF values typically published for these relays. Also, the Markov modeling indicates that both the relay unavailability and abnormal unavailability actually become higher with more frequent testing. This shows that the time spent on these more frequent tests yields no failure discoveries that approach the negative impact of removing the relays from service and running the tests.

The PSMT SDT discussed the practical need for "time-interval extensions" or "grace periods" to allow for scheduling problems that resulted from any number of business contingencies. The time interval discussions also focused on the need to reflect industry norms surrounding Generator outage frequencies. Finally it was again noted that FERC Order 693 demanded maximum time intervals. "Maximum time intervals" by their very term negates any "time-interval extension" or "grace periods". To recognize the need to follow industry norms on Generator outage frequencies and accommodate a form of time-interval extension while still following FERC Order 693 the Standard Drafting Team arrived at a 6 year interval for the electromechanical relay instead of the 5 year interval arrived at by the SPCTF. The PSMT SDT has followed the FERC directive for a *maximum* time interval and has determined that no extensions will be allowed. Six years has been set for the maximum time interval between manual maintenance activities. This maximum time interval also works well for maintenance cycles that have been in use in generator plants for decades.

For monitored relays, the PSMT SDT notes that the SPCTF called for 10 years as the interval between maintenance activities. This 10 year interval was chosen even though there was "…no significant change in unavailability value over the range of 9, 10, or 11 years. This was true even for a relay Mean Time between Failures (MTBF) of 50 years…" The Standard Drafting Team again sought to align maintenance activities with known successful practices and outage schedules. The Standard does not allow extensions on any component of the Protection System; thus the maximum allowed interval for these components has been set ~~to12~~to 12 years. Twelve years also fits well into the traditional maintenance cycles of both substations and generator plants.

Also of note is the Table's use of the term "Calendar" in the column for "Maximum Maintenance Interval". The PSMT SDT deemed it necessary to include the term "Calendar" to

facilitate annual maintenance planning, scheduling and implementation. This need is the result of known occurrences of system requirements that could cause maintenance schedules to be missed by a few days or weeks. The PSMT SDT chose the term "Calendar" to preclude the need to have schedules be met to the day. An electromechanical protective relay that is maintained in year #1 need not be revisited until 6 years later (year #7). For example: a relay was maintained April 10, 2008; maintenance would need to be completed no later than December 31, 2014.

Though not a requirement of this Standard, to stay in line with many Compliance Enforcement Agencies audit processes an entity should define, within their own PSMP, the entity's use of terms like annual, calendar year, etc. Then, once this is within the PSMP the entity should abide by their chosen language.

9. Performance-Based Maintenance Process

In lieu of using the Table 1 intervals, a Performance-Based Maintenance process may be used to establish maintenance intervals (*PRC-005 Attachment A Criteria for a Performance-Based Protection System Maintenance Program*). A Performance-Based Maintenance process may justify longer maintenance intervals, or require shorter intervals relative to Table 1. In order to use a Performance-Based Maintenance process, the documented maintenance program must include records of repairs, adjustments, and corrections to covered Protection Systems in order to provide historical justification for intervals other than those established in Table 1. Furthermore, the asset owner must regularly analyze these records of corrective actions to develop a ranking of causes. Recurrent problems are to be highlighted, and remedial action plans are to be documented to mitigate or eliminate recurrent problems.

Entities with Performance-Based Maintenance track performance of Protection Systems, demonstrate how they analyze findings of performance failures and aberrations, and implement continuous improvement actions. Since no maintenance program can ever guarantee that no malfunction can possibly occur, documentation of a Performance-Based Maintenance program would serve the utility well in explaining to regulators and the public a Misoperation leading to a major system outage event.

A Performance-Based Maintenance program requires auditing processes like those included in widely used industrial quality systems (such as ***ISO 9001-2000, Quality management systems — Requirements;*** or applicable parts of the NIST Baldridge National Quality Program). The audits periodically evaluate:

- The completeness of the documented maintenance process
- Organizational knowledge of and adherence to the process
- Performance metrics and documentation of results
- Remediation of issues
- Demonstration of continuous improvement.

In order to opt into a Performance-Based Maintenance (PBM) program the asset owner must first sort the various Protection System components into population segments. Any population segment must be comprised of at least 60 individual units; if any asset owner opts for PBM but does not own 60 units to comprise a population then that asset owner may combine data from other asset owners until the needed 60 units is aggregated. Each population segment must be composed of a grouping of Protection Systems or components of a consistent design standard or particular model or type from a single manufacturer and subjected to similar environmental factors. For example: One segment cannot be comprised of both GE & Westinghouse electro-mechanical lock-out relays; likewise, one segment cannot be comprised of 60 GE lock-out relays, 30 of which are in a dirty environment and the remaining 30 from a clean environment. This PBM process cannot be applied to batteries but can be applied to all other components of

a Protection System including (but not limited to) specific battery chargers, instrument transformers, trip coils and/or control circuitry (etc.).

9.1 Minimum Sample Size

Large Sample Size

An assumption that needs to be made when choosing a sample size is "the sampling distribution of the sample mean can be approximated by a normal probability distribution." The Central Limit Theorem states: "In selecting simple random samples of size *n* from a population, the sampling distribution of the sample mean *x* can be approximated by a normal probability distribution as the sample size becomes large." (Essentials of Statistics for Business and Economics, Anderson, Sweeney, Williams, 2003)

To use the Central Limit Theorem in statistics, the population size should be large. The references below are supplied to help define what is large.

> "… whenever we are using a large simple random sample (rule of thumb: n>=30), the central limit theorem enables us to conclude that the sampling distribution of the sample mean can be approximated by a normal distribution." (Essentials of Statistics for Business and Economics, Anderson, Sweeney, Williams, 2003)
>
> "If samples of size n, when n>=30, are drawn from any population with a mean *u* and a standard deviation σ, the sampling distribution of sample means approximates a normal distribution. The greater the sample size, the better the approximation." (Elementary Statistics - Picturing the World, Larson, Farber, 2003)
>
> "The sample size is large (generally n>=30)… (Introduction to Statistics and Data Analysis - Second Edition, Peck, Olson, Devore, 2005)
>
> "… the normal is often used as an approximation to the *t* distribution in a test of a null hypothesis about the mean of a normally distributed population when the population variance is estimated from a relatively large sample. A sample size exceeding 30 is often given as a minimal size in this connection." (Statistical Analysis for Business Decisions, Peters, Summers, 1968)

Error of Distribution Formula

Beyond the large sample size discussion above, a sample size requirement can be estimated using the bound on the Error of Distribution Formula when the expected result is of a "Pass/Fail" format and will be between 0 and 1.0.

The Error of Distribution Formula is:

$$B = z\sqrt{\frac{\pi(1-\pi)}{n}}$$

Where:

B = bound on the error of distribution (allowable error)

z = standard error

π = expected failure rate

n = sample size required

Solving for n provides:

$$n = \pi(1-\pi)\left(\frac{z}{B}\right)^2$$

Minimum Population Size to use Performance-Based Program

One entity's population of components should be large enough to represent a sizeable sample of a vendor's overall population of manufactured devices. For this reason the following assumptions are made:

B = 5%

z = 1.96 (This equates to a 95% confidence level)

π = 4%

Using the equation above, n=59.0.

Minimum Sample Size to evaluate Performance-Based Program

The number of components that should be included in a sample size for evaluation of the appropriate testing interval can be smaller because a lower confidence level is acceptable since the sample testing is repeated or updated annually. For this reason, the following assumptions are made:

B = 5%

z = 1.44 (85% confidence level)

π = 4%

Using the equation above, n=31.8.

Recommendation

Based on the above discussion, a sample size should be at least 30 to allow use of the equation mentioned. Using this and the results of the equation, the following numbers are recommended (and required within the Standard):

Minimum Population Size to use Performance-Based Maintenance Program = 60

Minimum Sample Size to evaluate Performance-Based Program = 30.

Once the population segment is defined then maintenance must begin within the intervals as outlined for the device described in the Tables 1-1 through 1-5. Time intervals can be lengthened provided the last year's worth of components tested (or the last 30 units maintained, whichever is more) had fewer than 4% countable events. It is notable that 4% is specifically chosen because an entity with a small population (60 units) would have to adjust its time intervals between maintenance if more than 1 countable event was found to have occurred during the last analysis period. A smaller percentage would require that entity to adjust the time interval between maintenance activities if even one unit is found out of tolerance or causes a Misoperation.

The minimum number of units that can be tested in any given year is 5% of the population. Note that this 5% threshold sets a practical limitation on total length of time between intervals at 20 years.

If at any time the number of countable events equals or exceeds 4% of the last year's tested components (or the last 30 units maintained, whichever is more) then the time period between manual maintenance activities must be decreased. There is a time limit on reaching the decreased time at which the countable events is less than 4%; this must be attained within three years.

~~This additional time period of three years to restore segment performance to <4% countable events is mandated to keep entities from "gaming the PBM system". It is believed that this requirement provides the economic disincentives to discourage asset owners from arbitrarily pushing the PBM time intervals out to up to 20 years without proper statistical data.~~

9.2 Frequently Asked Questions:

I'm a small entity and cannot aggregate a population of Protection System components to establish a segment required for a Performance-Based Protection System Maintenance Program. How can I utilize that opportunity?

Multiple asset owning entities may aggregate their individually owned populations of individual Protection System components to create a segment that crosses ownership boundaries. All entities participating in a joint program should have a single documented joint management process, with consistent Protection System Maintenance Programs (practices, maintenance intervals and criteria), for which the multiple owners are individually responsible with respect to the requirements of the Standard. The requirements established for Performance-Based Maintenance must be met for the overall aggregated program on an ongoing basis.

The aggregated population should reflect all factors that affect consistent performance across the population, including any relevant environmental factors such as geography, power-plant vs. substation, and weather conditions.

Can an owner go straight to a Performance-Based Maintenance program schedule, if they have previously gathered records?

Yes. An owner can go to a Performance-Based Maintenance program immediately. The owner will need to comply with the requirements of a Performance-Based Maintenance program as listed in the Standard. Gaps in the data collected will not be allowed; therefore, if an owner finds that a gap exists such that they cannot prove that they have collected the data as required for a Performance-Based Maintenance program then they will need to wait until they can prove compliance.

When establishing a Performance-Based Maintenance program, can I use test data from the device manufacturer, or industry survey results, as results to help establish a basis for my Performance-Based intervals?

No. You must use actual in-service test data for the components in the segment.

What types of misoperations or events are not considered countable events in the Performance-Based Protection System Maintenance (PBM) Program?

Countable events are intended to address conditions that are attributed to hardware failure or calibration failure; that is, conditions that reflect deteriorating performance of the component. These conditions include any condition where the device previously worked properly, then, due to changes within the device, malfunctioned or degraded to the point that re-calibration (to within the entity's tolerance) was required.

For this purpose of tracking hardware issues, human errors resulting in Protection System misoperations during system installation or maintenance activities are not considered countable events. Examples of excluded human errors include relay setting errors, design errors, wiring errors, inadvertent tripping of devices during testing or installation, and misapplication of Protection System components. Examples of misapplication of Protection System components include wrong CT or PT tap position, protective relay function misapplication, and components not specified correctly for their installation. Obviously, if one is setting up relevant data about hardware failures then human failures should be eliminated from the hardware performance analysis.

One example of human-error is not pertinent data might be in the area of testing "86" lock-out relays (LOR). "Entity A" has two types of LOR's type "X" and type "Y"; they want to move into a performance based maintenance interval. They have 1000 of each type, so the population variables are met. During electrical trip testing of all of their various schemes over the initial six-year interval they find zero type "X" failures, but human error led to tripping a BES element 100 times; they find 100 type "Y" failures and had an additional 100 human-error caused tripping incidents. In this example the human-error caused misoperations should not be used to judge the performance of either type of LOR. Analysis of the data might lead "Entity A" to change time intervals. Type "X" LOR can be placed into extended time interval testing because of its low failure rate (zero failures) while Type "Y" would have to be tested more often than every 6 calendar years (100 failures divided by 1000 units exceeds the 4% tolerance level).

Certain types of Protection System component errors that cause misoperations are not considered countable events. Examples of excluded component errors include device malfunctions that are correctable by firmware upgrades and design errors that do not impact protection function.

What are some examples of methods of correcting segment perfomance for Performance-Based Maintenance?

There are a number of methods that may be useful for correcting segment performance for mal-performing segments in a Performance-Based Maintenance system. Some examples are listed below.

- The maximum allowable interval, as established by the Performance-Based Maintenance system, can be decreased. This may, however, be slow to correct the performance of the segment.
- Identifiable sub-groups of components within the established segment, which have been identified to be the mal-performing portion of the segment, can be broken out as an independent segment for target action. Each resulting segment must satisfy the minimum population requirements for a Performance-Based Maintenance program in order to remain within the program.
- Targeted corrective actions can be taken to correct frequently occurring problems. An example would be replacement of capacitors within electromechanical distance relays if bad capacitors were determined to be the cause of the mal-performance.
- Components within the mal-performing segment can be replaced with other components (electromechanical distance relays with microprocessor relays, for example) to remove the mal-performing segment.

If I find (and correct) a maintenance-correctable issue as a result of a misoperation investigation (Re: PRC-004), how does this affect my Performance-Based Maintenance program?

If you perform maintenance on a Protection System component for any reason (including as part of a PRC-004 required misoperation investigation/corrective action), the actions performed can count as a maintenance activity provided the activities in the relevant Tables have been done, and, if you desire, "reset the clock" on everything you've done. In a Performance-Based Maintenance program, you also need to record the maintenance-correctable issue ~~with~~as a countable event within the relevant component group segment and use it in the analysis to determine your correct Performance-Based Maintenance interval for that component group. Note that "resetting the clock" should not be construed as interfering with an entity's routine testing schedule because the "clock-reset" would actually make for a decreased time interval by the time the next routine test schedule comes around.

For example a relay scheme, consisting of 4 relays, is tested on 1-1-11 and the PSMP has a time interval of 3 calendar years with an allowable extension of 1 calendar year. The relay would be due again for routine testing before the end of the year 2015. This mythical relay scheme has a misoperation on 6-1-12 that points to one of the four relays as bad. Investigation proves a bad relay and a new one is tested and installed in place of the original. This replacement relay actually could be retested before the end of the year 2016 (clock-reset) and not be out of compliance. This requires tracking maintenance by individual relays and is allowed. However, many companies schedule maintenance in other ways like by substation or by circuit breaker or by relay scheme. By these methods of tracking maintenance that "replaced relay" will be retested before the end of the year 2015. This is also acceptable. In no case was a particular

relay tested beyond the PSMP of 4 years max, nor was the 6 year max of the Standard exceeded. The entity can reset the clock if they desire or the entity can continue with original schedules and, in effect, test even more frequently.

Why are batteries excluded from PBM? What about exclusion of batteries from condition based maintenance?

Batteries are the only element of a Protection System that is a perishable item with a shelf life. As a perishable item batteries require not only a constant float charge to maintain their freshness (charge), but periodic inspection to determine if there are problems associated with their aging process and testing to see if they are maintaining a charge or can still deliver their rated output as required.

Besides being perishable, a second unique feature of a battery that is unlike any other Protection System element is that a battery uses chemicals, metal alloys, plastics, welds, and bonds that must interact with each other to produce the constant dc source required for Protection Systems, undisturbed by ac system disturbances.

No type of battery manufactured today for Protection System application is free from problems that can only be detected over time by inspection and test. These problems can arise from variances in the manufacturing process, chemicals and alloys used in the construction of the individual cells, quality of welds and bonds to connect the components, the plastics used to make batteries and the cell forming process for the individual battery cells.

Other problems that require periodic inspection and testing can result from transportation from the factory to the job site, length of time before a charge is put on the battery, the method of installation, the voltage level and duration of equalize charges, the float voltage level used, and the environment that the battery is installed in.

All of the above mentioned factors and several more not discussed here are beyond the control of the Functional Entities that want to use a Performance-Based Protection System Maintenance (PBM) program. These inherent variances in the aging process of a battery cell make establishment of a designated segment based on manufacturer and type of battery impossible.

The whole point of PBM is that if all variables are isolated then common aging and performance criteria would be the same. However, there are too many variables in the electrochemical process to completely isolate all of the performance-changing criteria.

Similarly, Functional Entities that want to establish a condition-based maintenance program using the highest levels of monitoring, resulting in the least amount of hands-on maintenance activity, cannot completely eliminate some periodic maintenance of the battery used in a station dc supply. Inspection of the battery is required on a Maximum Maintenance Interval listed in the tables due to the aging processes of station batteries. However, higher degrees of monitoring of a battery can eliminate the requirement for some periodic testing and some inspections (see Table 1-4).

Please provide an example of the calculations involved in extending maintenance time intervals using PBM.

Entity has 1000 GE-HEA lock-out relays; this is greater than the minimum sample requirement of 60.

They start out testing all of the relays within the prescribed Table requirements (6 year max) by testing the relays every 5 years. The entity's plan is to test 200 units per year; this is greater than the minimum sample size requirement of 30.

For the sake of example only the following will show 6 failures per year, reality may well have different numbers of failures every year. PBM requires annual assessment of failures found per units tested.

After the first year of tests the entity finds 6 failures in the 200 units tested. 6/200= 3% failure rate.

This entity is now allowed to extend the maintenance interval if they choose.

The entity chooses to extend the maintenance interval of this population segment out to 10 years.

This represents a rate of 100 units tested per year; entity selects 100 units to be tested in the following year.

After that year of testing these 100 units the entity again finds 6 failed units. 6/100= 6% failures.

This entity has now exceeded the acceptable failure rate for these devices and must accelerate testing of all of the units at a higher rate such that the failure rate is found to be less than 4% per year; the entity has three years to get this failure rate down to 4% or less (per year).

In response to the 6% failure rate, the entity decreases the testing interval to 8 years. This means that they will now test 125 units per year (1000/8). The entity has just two years left to get the test rate corrected.

After a year they again find 6 failures out of the 125 units tested. 6/125= 5% failures.

In response to the 5% failure rate, the entity decreases the testing interval to 7 years. This means that they will now test 143 units per year (1000/7). The entity has just one year left to get the test rate corrected.

After a year they again find 6 failures out of the 143 units tested. 6/143= 4.2% failures.

(Note that the entity has tried 5 years and they were under the 4% limit and they tried 7 years and they were over the 4% limit. They must be back at 4% failures or less in the next year so they might simply elect to go back to 5 years.)

Instead, in response to the 5% failure rate, the entity decreases the testing interval to 6 years. This means that they will now test 167 units per year (1000/6).

After a year they again find 6 failures out of the 167 units tested. 6/167= 3.6% failures.

Entity found that they could maintain the failure rate at no more than 4% failures by maintaining the testing interval at 6 years or less. Entity chose 6 year interval and effectively extended their TBM (5 years) program by 20%.

A note of practicality is that an entity will probably be in better shape to lengthen the intervals between tests if the failure rate is less than 2%. But the requirements allow for annual adjustments if the entity desires. As a matter of maintenance management, an ever-changing test rate (units tested / year) may be un-workable.

Note that the "5% of components" requirement effectively sets a practical limit of 20 year maximum PBM interval. Also of note is the "3 years" requirement; ~~this is there to prevent an entity from "gaming the system".~~ an entity might arbitrarily extend time intervals from 6 years to 20 years. In the event that an entity finds a failure rate greater than 4% then the test rate must be accelerated such that within three years the failure rate must be brought back down to 4% or less.

Here is a table that demonstrates the values discussed:

Year #	Total Population (P)	Test Interval (I)	Units to be Tested (U= P/I)	# of Failures Found (F)	Failure Rate (=F/U)	Decision to Change Interval Yes or No	Interval Chosen
1	1000	5 yrs	200	6	3%	Yes	10 yrs
2	1000	10 yrs	100	6	6%	Yes	8 yrs
3	1000	8 yrs	125	6	5%	Yes	7 yrs
4	1000	7 yrs	143	6	4.2%	Yes	6 yrs
5	1000	6 yrs	167	6	3.6%	No	6 yrs

Please provide an example of the calculations involved in extending maintenance time intervals using PBM for control circuitry.

Note that the following example captures "Control Circuitry" as all of the trip paths associated with a particular trip coil of a circuit breaker. An entity is not restricted to this method of counting control circuits. Perhaps another method an entity would prefer would be to simply track every individual (parallel) trip path. Or perhaps another method would be to track all of the trip outputs from a specific (set) of relays protecting a specific element. Under the included definition of "Component":

The designation of what constitutes a control circuit component is very dependent upon how an entity performs and tracks the testing of the control circuitry.~~The designation of what constitutes a control circuit component is very dependent upon how an entity performs and tracks the testing of the control circuitry.~~ Some entities test their control circuits on a breaker basis whereas others test their circuitry on a local zone of protection basis. Thus, entities are allowed the latitude to designate their own definitions of control circuit components. Another example of where the entity has some discretion on determining what constitutes a single component is the voltage and current sensing devices, where the entity may choose either to designate a full three-phase set of such devices or a single device as a single component.

And in Attachment A (PBM) the definition of Segment:

Segment *– Protection Systems or components of a consistent design standard, or a particular model or type from a single manufacturer that typically share other common elements.~~**Segment** – Protection Systems or components of a consistent design standard, or a particular model or type from a single manufacturer that typically share other common elements.~~ Consistent performance is expected across the entire population of a segment. A segment must contain at least sixty (60) individual components.*

Example:

Entity has 1000 circuit breakers, all of which have two trip coils for a total of 2000 trip coils; if all circuitry was designed and built with a consistent (internal entity) standard then this is greater than the minimum sample requirement of 60.

For the sake of further example the following facts are given:

Half of all relay panels (500) were built 40 years ago by an outside contractor, consisted of asbestos wrapped 600V-insulation panel wiring and the cables exiting the control house are THHN pulled in conduit direct to exactly half of all of the various circuit breakers. All of the relay panels and cable pulls were built with consistent standards and consistent performance standard expectations within the segment (which is greater than 60). Each relay panel has redundant microprocessor (MPC) relays (retrofitted); each MPC relay supplies an individual trip output to each of the two trip coils of the assigned circuit breaker.

Approximately 35 years ago the entity developed their own internal construction crew and now builds all of their own relay panels from parts supplied from vendors that meet the entity's specifications, including SIS 600V insulation wiring and copper-sheathed cabling within the direct conduits to circuit breakers. The construction crew uses consistent standards in the

construction. This newer segment of their Control Circuitry population is different than the original segment, consistent (standards, construction and performance expectations) within the new segment and constitutes the remainder of the entity's population, (another 500 panels and the cabling to the remaining 500 circuit breakers). Each relay panel has redundant microprocessor (MPC) relays; each MPC relay supplies an individual trip output to each of the two trip coils of the assigned circuit breaker. Every trip path in this newer segment has a device that monitors the voltage directly across the trip contacts of the MPC relays and alarms via RTU and SCADA to the Operations Control room. This monitoring device, when not in alarm, demonstrates continuity all the way through the trip coil, cabling and wiring back to the trip contacts of the MPC relay.

The entity is tracking 2000 trip coils (each consisting of multiple trip paths) in each of these two segments. But half of all of the trip paths are monitored, therefore the trip paths are continuously tested and the circuit will alarm when there is a failure; these alarms have to be verified every 12 years for correct operation.

The entity now has 1000 trip coils (and associated trip paths) remaining that they have elected to count as control circuits. The entity has instituted a process that requires the verification of every trip path to each trip coil (one unit), including the electrical activation of the trip coil. (The entity notes that the trip coils will have to be tripped electrically more often than the trip path verification and is taking care of this activity through other documentation of real-time fault operations.)

They start out testing all of the trip coil circuits within the prescribed Table requirements (12 year max) by testing the trip circuits every 10 years. The entity's plan is to test 100 units per year; this is greater than the minimum sample size requirement of 30.

For the sake of example only the following will show 3 failures per year, reality may well have different numbers of failures every year. PBM requires annual assessment of failures found per units tested.

After the first year of tests the entity finds 3 failures in the 100 units tested. 3/100= 3% failure rate.

This entity is now allowed to extend the maintenance interval if they choose.

The entity chooses to extend the maintenance interval of this population segment out to 20 years.

This represents a rate of 50 units tested per year; entity selects 50 units to be tested in the following year.

After that year of testing these 50 units the entity again finds 3 failed units. 3/50= 6% failures.

This entity has now exceeded the acceptable failure rate for these devices and must accelerate testing of all of the units at a higher rate such that the failure rate is found to be less than 4% per year; the entity has three years to get this failure rate down to 4% or less (per year).

In response to the 6% failure rate, the entity decreases the testing interval to 16 years. This means that they will now test 63 units per year (1000/16). The entity has just two years left to get the test rate corrected.

After a year they again find 3 failures out of the 63 units tested. 3/63= 4.76% failures.

In response to the >4% failure rate, the entity decreases the testing interval to 14 years. This means that they will now test 72 units per year (1000/14). The entity has just one year left to get the test rate corrected.

After a year they again find 3 failures out of the 72 units tested. 3/72= 4.2% failures.

(Note that the entity has tried 10 years and they were under the 4% limit and they tried 14 years and they were over the 4% limit. They must be back at 4% failures or less in the next year so they might simply elect to go back to 10 years.)

Instead, in response to the 4.2% failure rate, the entity decreases the testing interval to 12 years. This means that they will now test 84 units per year (1000/12).

After a year they again find 3 failures out of the 84 units tested. 3/84= 3.6% failures.

Entity found that they could maintain the failure rate at no more than 4% failures by maintaining the testing interval at 12 years or less. Entity chose 12 year interval and effectively extended their TBM (10 years) program by 20%.

A note of practicality is that an entity will probably be in better shape to lengthen the intervals between tests if the failure rate is less than 2%. But the requirements allow for annual adjustments if the entity desires. As a matter of maintenance management, an ever-changing test rate (units tested / year) may be un-workable.

Note that the "5% of components" requirement effectively sets a practical limit of 20 year maximum PBM interval. Also of note is the "3 years" requirement;~~ this is there to prevent an entity from "gaming the system".~~ an entity might arbitrarily extend time intervals from 6 years to 20 years. In the event that an entity finds a failure rate greater than 4% then the test rate must be accelerated such that within three years the failure rate must be brought back down to 4% or less.

Here is a table that demonstrates the values discussed:

Year #	Total Population (P)	Test Interval (I)	Units to be Tested (U= P/I)	# of Failures Found (F)	Failure Rate (=F/U)	Decision to Change Interval Yes or No	Interval Chosen
1	1000	10 yrs	100	3	3%	Yes	20 yrs
2	1000	20 yrs	50	3	6%	Yes	16yrs
3	1000	16 yrs	63	3	4.8%	Yes	14 yrs
4	1000	14 yrs	72	3	4.2%	Yes	12 yrs
5	1000	12 yrs	84	3	3.6%	No	12 yrs

Please provide an example of the calculations involved in extending maintenance time intervals using PBM for voltage and current sensing devices.

Note that the following example captures "voltage and current inputs to the protective relays" as all of the various current transformer and potential transformer signals associated with a particular set of relays used for protection of a specific element. This entity calls this set of protective relays a "Relay Scheme". Thus this entity chooses to count PT and CT signals as a group instead of individually tracking maintenance activities to specific bushing CT's or specific PT's. An entity is not restricted to this method of counting voltage and current devices, signals and paths. Perhaps another method an entity would prefer would be to simply track every individual PT and CT. Note that a generation maintenance group may well select the latter because they may elect to perform routine off-line tests during generator outages whereas a transmission maintenance group might create a process that utilizes real-time system values measured at the relays. Under the included definition of "Component":

The designation of what constitutes a control circuit component is very dependent upon how an entity performs and tracks the testing of the control circuitry.~~The designation of what constitutes a control circuit component is very dependent upon how an entity performs and tracks the testing of the control circuitry.~~ Some entities test their control circuits on a breaker basis whereas others test their circuitry on a local zone of protection basis. Thus, entities are allowed the latitude to designate their own definitions of control circuit components. Another example of where the entity has some discretion on determining what constitutes a single component is the voltage and current sensing devices, where the entity may choose either to designate a full three-phase set of such devices or a single device as a single component.

And in Attachment A (PBM) the definition of Segment:

Segment – *Protection Systems or components of a consistent design standard, or a particular model or type from a single manufacturer that typically share other common elements.~~And in Attachment A (PBM) the definition of Segment:~~*

~~**Segment** – *Protection Systems or components of a consistent design standard, or a particular model or type from a single manufacturer that typically share other common elements.*~~ *Consistent performance is expected across the entire population of a segment. A segment must contain at least sixty (60) individual components.*

Example:

Entity has 2000 "Relay Schemes", all of which have three current signals supplied from bushing CT's and three voltage signals supplied from substation bus PT's. All cabling and circuitry was designed and built with a consistent (internal entity) standard and this population is greater than the minimum sample requirement of 60.

For the sake of further example the following facts are given:

Half of all relay schemes (1000) are supplied with current signals from ANSI STD C800 bushing CT's and voltage signals from PT's built by ACME Electric MFR CO. All of the relay panels and cable pulls were built with consistent standards and consistent performance standard

expectations exist for the consistent wiring, cabling and instrument transformers within the segment (which is greater than 60).

The other half of the entity's relay schemes have MPC relays with additional monitoring built-in that compare DNP values of voltages and currents (or Watts and VARs) as interpreted by the MPC relays and alarm for an entity-accepted tolerance level of accuracy. This newer segment of their "Voltage and Current Sensing" population is different than the original segment, consistent (standards, construction and performance expectations) within the new segment and constitutes the remainder of the entity's population.

The entity is tracking many thousands of voltage and current signals within 2000 relay schemes (each consisting of multiple voltage and current signals) in each of these two segments. But half of all of the relay schemes voltage and current signals are monitored, therefore the voltage and current signals are continuously tested and the circuit will alarm when there is a failure; these alarms have to be verified every 12 years for correct operation.

The entity now has 1000 relay schemes worth of voltage and current signals remaining that they have elected to count within their relay schemes designation. The entity has instituted a process that requires the verification of these voltage and current signals within each relay scheme (one unit).

(Please note - a problem discovered with a current or voltage signal found at the relay could be caused by anything from the relay all the way to the signal source itself. Having many sources of problems can easily increase failure rates beyond the rate of failures of just one item (for example just PT's). It is the intent of the SDT to minimize failure rates of all of the equipment to an acceptable level thus any failure of any item that gets the signal from source to relay is counted. It is for this reason that the SDT chose to set the boundary at the ability of the signal to be delivered all the way to the relay.)

The entity will start out measuring all of the relay scheme voltage and currents at the individual relays within the prescribed Table requirements (12 year max) by measuring the voltage and current values every 10 years. The entity's plan is to test 100 units per year; this is greater than the minimum sample size requirement of 30.

For the sake of example only the following will show 3 failures per year, reality may well have different numbers of failures every year. PBM requires annual assessment of failures found per units tested.

After the first year of tests the entity finds 3 failures in the 100 units tested. 3/100= 3% failure rate.

This entity is now allowed to extend the maintenance interval if they choose.

The entity chooses to extend the maintenance interval of this population segment out to 20 years.

This represents a rate of 50 units tested per year; entity selects 50 units to be tested in the following year.

After that year of testing these 50 units the entity again finds 3 failed units. 3/50= 6% failures.

This entity has now exceeded the acceptable failure rate for these devices and must accelerate testing of all of the units at a higher rate such that the failure rate is found to be less than 4% per year; the entity has three years to get this failure rate down to 4% or less (per year).

In response to the 6% failure rate, the entity decreases the testing interval to 16 years. This means that they will now test 63 units per year (1000/16). The entity has just two years left to get the test rate corrected.

After a year they again find 3 failures out of the 63 units tested. 3/63= 4.76% failures.

In response to the >4% failure rate, the entity decreases the testing interval to 14 years. This means that they will now test 72 units per year (1000/14). The entity has just one year left to get the test rate corrected.

After a year they again find 3 failures out of the 72 units tested. 3/72= 4.2% failures.

(Note that the entity has tried 10 years and they were under the 4% limit and they tried 14 years and they were over the 4% limit. They must be back at 4% failures or less in the next year so they might simply elect to go back to 10 years.)

Instead, in response to the 4.2% failure rate, the entity decreases the testing interval to 12 years. This means that they will now test 84 units per year (1000/12).

After a year they again find 3 failures out of the 84 units tested. 3/84= 3.6% failures.

Entity found that they could maintain the failure rate at no more than 4% failures by maintaining the testing interval at 12 years or less. Entity chose 12 year interval and effectively extended their TBM (10 years) program by 20%.

A note of practicality is that an entity will probably be in better shape to lengthen the intervals between tests if the failure rate is less than 2%. But the requirements allow for annual adjustments if the entity desires. As a matter of maintenance management, an ever-changing test rate (units tested / year) may be un-workable.

Note that the "5% of components" requirement effectively sets a practical limit of 20 year maximum PBM interval. Also of note is the "3 years" requirement;~~ this is there to prevent an entity from "gaming the system".~~ an entity might arbitrarily extend time intervals from 6 years to 20 years. In the event that an entity finds a failure rate greater than 4% then the test rate must be accelerated such that within three years the failure rate must be brought back down to 4% or less.

Here is a table that demonstrates the values discussed:

Year #	Total Population (P)	Test Interval (I)	Units to be Tested (U= P/I)	# of Failures Found (F)	Failure Rate (=F/U)	Decision to Change Interval Yes or No	Interval ~~Chosen~~Chose

1	1000	10 yrs	100	3	3%	Yes	20 yrs
2	1000	20 yrs	50	3	6%	Yes	16yrs
3	1000	16 yrs	63	3	4.8%	Yes	14 yrs
4	1000	14 yrs	72	3	4.2%	Yes	12 yrs
5	1000	12 yrs	84	3	3.6%	No	12 yrs

10. Overlapping the Verification of Sections of the Protection System

Tables 1-1 through 1-5 require that every Protection System component be periodically verified. One approach, but not the only method, is to test the entire protection scheme as a unit, from the secondary windings of voltage and current sources to breaker tripping. For practical ongoing verification, sections of the Protection System may be tested or monitored individually. The boundaries of the verified sections must overlap to ensure that there are no gaps in the verification. See Appendix A of this Supplementary Reference for additional discussion on this topic.

All of the methodologies expressed within this report may be combined by an entity, as appropriate, to establish and operate a maintenance program. For example, a Protection System may be divided into multiple overlapping sections with a different maintenance methodology for each section:

- Time-based ma
- Monitoring as described in Tables 1-1 through 1-5;
- A Performance-Based Maintenance program as described in Section 9 above or Attachment A of the Standard;
- Opportunistic verification using analysis of fault records as described in Section 11

10.1 Frequently Asked Question:

My system has alarms that are gathered once daily through an auto-polling system; this is not really a conventional SCADA system but does it meet the Table 1 requirements for inclusion as a monitored system?

Yes, provided the auto-polling that gathers the alarms reports those alarms to a location where the action can be initiated to correct the ~~maintenance-correctable~~ issue. This location does not have to be the location of the engineer or the technician that will eventually repair the problem, but rather a location where the action can be initiated.

11. Monitoring by Analysis of Fault Records

Many users of microprocessor relays retrieve fault event records and oscillographic records by data communications after a fault. They analyze the data closely if there has been an apparent misoperation, as NERC Standards require. Some advanced users have commissioned automatic fault record processing systems that gather and archive the data. They search for evidence of component failures or setting problems hidden behind an operation whose overall outcome seems to be correct. The relay data may be augmented with independently captured digital fault recorder (DFR) data retrieved for the same event.

Fault data analysis comprises a legitimate CBM program that is capable of reducing the need for a manual time-interval based check on Protection Systems whose operations are analyzed. Even electromechanical Protection Systems instrumented with DFR channels may achieve some CBM benefit. The completeness of the verification then depends on the number and variety of faults in the vicinity of the relay that produce relay response records, and the specific data captured.

A typical fault record will verify particular parts of certain Protection Systems in the vicinity of the fault. For a given Protection System installation, it may or may not be possible to gather within a reasonable amount of time an ensemble of internal and external fault records that completely verify the Protection System.

For example, fault records may verify that the particular relays that tripped are able to trip via the control circuit path that was specifically used to clear that fault. A relay or DFR record may indicate correct operation of the protection communications channel. Furthermore, other nearby Protection Systems may verify that they restrain from tripping for a fault just outside their respective zones of protection. The ensemble of internal fault and nearby external fault event data can verify major portions of the Protection System, and reset the time clock for the Table 1 testing intervals for the verified components only.

What can be shown from the records of one operation is very specific and limited. In a panel with multiple relays, only the specific relay(s) whose operation can be observed without ambiguity should be used. Be careful about using fault response data to verify that settings or calibration are correct. Unless records have been captured for multiple faults close to either side of a setting boundary, setting or calibration could still be incorrect.

PMU data, much like DME data, can be utilized to prove various components of the Protection System. Obviously, care must be taken to attribute proof only to the parts of a Protection System that can actually be proven using the PMU or DME data.

If fault record data is used to show that portions or all of a Protection System have been verified to meet Table 1 requirements, the owner must retain the fault records used, and the maintenance related conclusions drawn from this data and used to defer Table 1 tests, for at least the retention time interval given in Section 8.2.

11.1 Frequently Asked Question:

I use my protective relays for fault and disturbance recording, collecting oscillographic records and event records via communications for fault analysis to meet NERC and DME requirements. What are the maintenance requirements for the relays?

For relays used only as disturbance monitoring equipment, the NERC Standard PRC-018-1 R3 & R6 states the maintenance requirements, and is being addressed by a Standards activity that is revising PRC-002-1 and PRC-018-1. For protective relays "that are designed to provide protection for the BES," this Standard applies, even if they also perform DME functions.

12. Importance of Relay Settings in Maintenance Programs

In manual testing programs, many utilities depend on pickup value or zone boundary tests to show that the relays have correct settings and calibration. Microprocessor relays, by contrast, provide the means for continuously monitoring measurement accuracy. Furthermore, the relay digitizes inputs from one set of signals to perform all measurement functions in a single self-monitoring microprocessor system. These relays do not require testing or calibration of each setting.

However, incorrect settings may be a bigger risk with microprocessor relays than with older relays. Some microprocessor relays have hundreds or thousands of settings, many of which are critical to Protection System performance.

Monitoring does not check measuring element settings. Analysis of fault records may or may not reveal setting problems. To minimize risk of setting errors after commissioning, the user should enforce strict settings data base management, with reconfirmation (manual or automatic) that the installed settings are correct whenever maintenance activity might have changed them. For background and guidance, see [5] in References.

Table 1 requires that settings must be verified to be as specified. The reason for this requirement is simple. With legacy relays (non-microprocessor protective relays) it is necessary to know the value of the intended setting in order to test, adjust and calibrate the relay. Proving that the relay works per specified setting was the de facto procedure. However, with the advanced microprocessor relays it is possible to change relay settings for the purpose of verifying specific functions and then neglect to return the settings to the specified values. While there is no specific requirement to maintain a settings management process there remains a need to verify that the settings left in the relay are the intended, specified settings. This need may manifest itself after any of the following:

- One or more settings are changed for any reason.
- A relay fails and is repaired or replaced with another unit.
- A relay is upgraded with a new firmware version.

12.1 Frequently Asked Questions:

How do I approach testing when I have to upgrade firmware of a microprocessor relay?

The entity should ensure that the relay continues to function properly after implementation of firmware changes. Some entities may have a R&D department that might routinely run acceptance tests on devices with firmware upgrades before allowing the upgrade to be installed. Other entities may rely upon the vigorous testing of the firmware OEM. An entity has

the latitude to install devices and/or programming that they believe will perform to their satisfaction. If an entity should choose to perform the maintenance activities specified in the Tables following a firmware upgrade then they may, if they choose, reset the time clock on that set of maintenance activities so that they would not have to repeat the maintenance on its regularly scheduled cycle. (However, for simplicity in maintenance schedules, some entities may choose to not reset this time clock; it is merely a suggested option.)

If I upgrade my old relays then do I have to maintain my previous equipment maintenance documentation?

If an equipment item is repaired or replaced then the entity can restart the maintenance-activity-time-interval-clock if desired, however the replacement of equipment does not remove any documentation requirements. The requirements in the Standard are intended to ensure that an entity has a maintenance plan and that the entity adheres to minimum activities and maximum time intervals. The documentation requirements are intended to help an entity demonstrate compliance. For example, saving the dates and records of the last two maintenance activities is intended to demonstrate compliance with the interval. Therefore, if you upgrade or replace equipment then you still must maintain the documentation for the previous equipment, thus demonstrating compliance with the time interval requirement prior to the replacement action.

We have a number of installations where we have changed our Protection System components. Some of the changes were upgrades, but others were simply system rating changes that merely required taking relays "out-of-service". What are our responsibilities when it comes to "out-of-service" devices?

Assuming that your system up-rates, upgrades and overall changes meet any and all other requirements and standards then the requirements of PRC-005-2 are simple – if the Protection System component performs a Protection System function then it must be maintained. If the component no longer performs Protection System functions then it does not require maintenance activities under the Tables of PRC-005-2. While many entities might physically remove a component that is no longer needed there is no requirement in PRC-005-2 to remove such component(s). Obviously, prudence would dictate that an "out-of-service" device is truly made inactive. There are no record requirements listed in PRC-005-2 for Protection System components not used.

While performing relay testing of a protective device on our Bulk Electric System it was discovered that the protective device being tested was either broken or out of calibration. Does this satisfy the relay testing requirement even though the protective device tested bad, and may be unable to be placed back into service?

Yes, PRC-005-2 requires entities to perform relay testing on protective devices on a given maintenance cycle interval. By performing this testing, the entity has satisfied PRC-005-2 requirement although the protective device may be unable to be returned to service under normal calibration adjustments. ~~R3~~R5 states ~~(the entity must):~~

~~R3~~R5. Each Transmission Owner, Generator Owner, and Distribution Provider shall ~~implement and follow its PSMP and initiate resolution of~~demonstrate efforts to correct any identified unresolved maintenance issues.

Also, when a failure occurs in a Protection System, power system security may be comprised, and notification of the failure must be conducted in accordance with relevant NERC Standards.

If I show the protective device out of service while it is being repaired then can I add it back as a new protective device when it returns? If not, my relay testing history would show that I was out of compliance for the last maintenance cycle.

The maintenance and testing requirements (~~R3) (in essence~~R5) state "…shall ~~implement and follow its PSMP and initiate resolution of~~demonstrate efforts to correct any identified unresolved maintenance issues..." The type of corrective activity is not stated; however it could include repairs or replacements.

Your documentation requirements will increase, of course, to demonstrate that your device tested bad and had corrective actions initiated. Your regional entity ~~could very well ask for documentation showing~~might ask about the status of your corrective actions.

13. Self-Monitoring Capabilities and Limitations

Microprocessor relay proponents have cited the self-monitoring capabilities of these products for nearly 20 years. Theoretically, any element that is monitored does not need a periodic manual test. A problem today is that the community of manufacturers and users has not created clear documentation of exactly what is and is not monitored. Some unmonitored but critical elements are buried in installed systems that are described as self-monitoring.

To utilize the extended time intervals allowed by monitoring the user must document that the monitoring attributes of the device match the minimum requirements listed in the Table 1.

Until users are able to document how all parts of a system which are required for the protective functions are monitored or verified (with help from manufacturers), they must continue with the unmonitored intervals established in Table 1 and Table 3.

Going forward, manufacturers and users can develop mappings of the monitoring within relays, and monitoring coverage by the relay of user circuits connected to the relay terminals.

To enable the use of the most extensive monitoring (and never again have a hands-on maintenance requirement), the manufacturers of the microprocessor-based self-monitoring components in the Protection System should publish for the user a document or map that shows:

- How all internal elements of the product are monitored for any failure that could impact Protection System performance.
- Which connected circuits are monitored by checks implemented within the product; how to connect and set the product to assure monitoring of these connected circuits; and what circuits or potential problems are not monitored.

With this information in hand, the user can document monitoring for some or all sections by:

- Presenting or referencing the product manufacturer's documents.
- Explaining in a system design document the mapping of how every component and circuit that is critical to protection is monitored by the microprocessor product(s) or by other design features.
- Extending the monitoring to include the alarm transmission facilities through which failures are reported within a given time frame to allocate where action can be taken to initiate resolution of the alarm attributed to ~~a~~an unresolved maintenance issue, so that failures of monitoring or alarming systems also lead to alarms and action.
- Documenting the plans for verification of any unmonitored components according to the requirements of Table 1 and Table 3.

13.1 Frequently Asked Question:

I can't figure out how to demonstrate compliance with the requirements for the highest level of monitoring of Protection Systems. Why does this Maintenance Standard describe a maintenance program approach I cannot achieve?

Demonstrating compliance with the requirements for the highest level of monitoring any particular component of Protection Systems is likely to be very involved, and may include detailed manufacturer documentation of complete internal monitoring within a device, comprehensive design drawing reviews, and other detailed documentation. This Standard does not presume to specify what documentation must be developed; only that it must be documented.

There may actually be some equipment available that is capable of meeting these highest levels of monitoring criteria, in which case it may be maintained according to the highest level of monitoring shown on the Tables. However, even if there is no equipment available today that can meet this level of monitoring; the Standard establishes the necessary requirements for when such equipment becomes available.

By creating a roadmap for development, this provision makes the Standard technology-neutral. The Standard Drafting Team wants to avoid the need to revise the Standard in a few years to accommodate technology advances that may be coming to the industry.

14. Notification of Protection System Failures

When a failure occurs in a Protection System, power system security may be compromised, and notification of the failure must be conducted in accordance with relevant NERC Standard(s). Knowledge of the failure may impact the system operator's decisions on acceptable loading conditions.

This formal reporting of the failure and repair status to the system operator by the Protection System owner also encourages the system owner to execute repairs as rapidly as possible. In some cases, a microprocessor relay or carrier set can be replaced in hours; wiring termination failures may be repaired in a similar time frame. On the other hand, a component in an electromechanical or early-generation electronic relay may be difficult to find and may hold up repair for weeks. In some situations, the owner may have to resort to a temporary protection panel, or complete panel replacement.

15. Maintenance Activities

Some specific maintenance activities are a requirement to ensure reliability. An example would be that a BES entity could be prudent in its protective relay maintenance but if its battery maintenance program is lacking then reliability could still suffer. The NERC glossary outlines a Protection System as containing specific components. PRC-005-2 requires specific maintenance activities be accomplished within a specific time interval. As noted previously, higher technology equipment can contain integral monitoring capability that actually performs maintenance verification activities routinely and often; therefore *manual intervention* to perform certain activities on these type components may not be needed.

15.1 Protective Relays (Table 1-1)

These relays are defined as the devices that receive the input signal from the current and voltage sensing devices and are used to isolate a faulted element of the BES. Devices that sense thermal, vibration, seismic, pressure, gas or any other non-electrical inputs are excluded.

Non-microprocessor based equipment is treated differently than microprocessor based equipment in the following ways, the relays should meet the asset owners' tolerances.

- Non-microprocessor devices must be tested with voltage and/or current applied to the device.
- Microprocessor devices may be tested through the integral testing of the device.
    - There is no specific protective relay commissioning test or relay routine test mandated.
    - There is no specific documentation mandated.

15.1.1 Frequently Asked Question:

What calibration tolerance should be applied on electromechanical relays?

Each entity establishes their own acceptable tolerances when applying protective relaying on their system. For some Protection System components, adjustment is required to bring measurement accuracy within the parameters established by the asset owner based on the specific application of the component. A calibration failure is the result if testing finds the specified parameters to be out of tolerance.

15.2 Voltage & Current Sensing Devices (Table 1-3)

These are the current and voltage sensing devices, usually known as instrument transformers. There is presently a technology available (fiber-optic Hall-effect) that does not utilize conventional transformer technology; these devices and other technologies that produce

quantities that represent the primary values of voltage and current are considered to be a type of voltage and current sensing devices included in this Standard.

The intent of the maintenance activity is to verify the input to the protective relay from the device that produces the current or voltage signal sample.

There is no specific test mandated for these components. The important thing about these signals is to know that the expected output from these components actually reaches the protective relay. Therefore, the proof of the proper operation of these components also demonstrates the integrity of the wiring (or other medium used to convey the signal) from the current and voltage sensing device all the way to the protective relay. The following observations apply.

- There is no specific ratio test, routine test or commissioning test mandated.
- There is no specific documentation mandated.
- It is required that the signal be present at the relay.
- This expectation can be arrived at from any of a number of means; (including but not limited to the following) by calculation, by comparison to other circuits, by commissioning tests, by thorough inspection, or by any means needed to verify the circuit meets the asset owner's Protection System maintenance program.
- An example of testing might be a saturation test of a CT with the test values applied at the relay panel; this therefore tests the CT as well as the wiring from the relay all the back to the CT.
- Another possible test is to measure the signal from the voltage and/or current sensing devices, during load conditions, at the input to the relay.
- Another example of testing the various voltage and/or current sensing devices is to query the microprocessor relay for the real-time loading; this can then be compared to other devices to verify the quantities applied to this relay. Since the input devices have supplied the proper values to the protective relay then the verification activity has been satisfied. Thus event reports (and oscillographs) can be used to verify that the voltage and current sensing devices are performing satisfactorily.
- Still another method is to measure total watts and vars around the entire bus; this should add up to zero watts and zero vars thus proving the voltage and/or current sensing devices system throughout the bus.
- Another method for proving the voltage and/or current sensing devices is to complete commissioning tests on all of the transformers, cabling, fuses and wiring.
- Any other ~~methods~~method that ~~provide documentation that~~ verifies the ~~expected transformer values as applied to the inputs~~input to the protective ~~relays are acceptable~~relay from the device that produces the current or voltage signal sample.

15.2.1 Frequently Asked Questions:

What is meant by "…verify the current and voltage circuit inputs from the voltage and current sensing devices to the protective relays …" Do we need to perform ratio, polarity and saturation tests every few years?

No. You must verify that the protective relay is receiving the expected values from the voltage and current sensing devices (typically voltage and current transformers). This can be as difficult as is proposed by the question (with additional testing on the cabling and substation wiring to ensure that the values arrive at the relays); or simplicity can be achieved by other verification methods. While some examples follow, these are not intended to represent an all-inclusive list; technology advances and ingenuity should not be excluded from making comparisons and verifications:

- Compare the secondary values, at the relay, to a metering circuit, fed by different current transformers, monitoring the same line as the questioned relay circuit.
- Compare the individual phase secondary values at the relay panel (with additional testing on the panel wiring to ensure that the values arrive at those relays) with the other phases, and verify that residual currents are within expected bounds
- Observe all three phase currents and the residual current at the relay panel with an oscilloscope, observing comparable magnitudes and proper phase relationship, with additional testing on the panel wiring to ensure that the values arrive at the relays.
- Compare the values, as determined by the questioned relay (such as, but not limited to, a query to the microprocessor relay), to another protective relay monitoring the same line, with currents supplied by different CT's.
- Compare the secondary values, at the relay with values measured by test instruments (such as, but not limited to multi-meters, voltmeter, clamp-on ammeters, etc) and verified by calculations and known ratios to be the values expected. For example a single PT on a 100KV bus will have a specific secondary value that when multiplied by the PT ratio arrives at the expected bus value of 100KV.
- Query SCADA for the power flows at the far end of the line protected by the questioned relay, compare those SCADA values to the values as determined by the questioned relay.
- Totalize the Watts and VARs on the bus and compare the totals to the values as seen by the questioned relay.

The point of the verification procedure is to ensure that all of the individual components are functioning properly; and that, an ongoing proactive procedure is in place to re-check the various components of the protective relay measuring systems.

Is wiring insulation or hi-pot testing required by this Maintenance Standard?

No, wiring insulation and equipment hi-pot testing are not specifically required by the Maintenance Standard. However, if the method of verifying CT and PT inputs to the relay involves some other method than actual observation of current and voltage transformer secondary inputs to the relay, it might be necessary to perform some sort of cable integrity test to verify that the instrument transformer secondary signals are actually making it to the relay and not being shunted off to ground. For instance, you could use CT excitation tests and PT turns ratio tests and compare to baseline values to verify that the instrument transformer outputs are acceptable. However, to conclude that these acceptable transformer instrument output signals are actually making it to the relay inputs, it also would be necessary to verify the insulation of the wiring between the instrument transformer and the relay.

My plant generator and transformer relays are electromechanical and do not have metering functions as do microprocessor based relays. In order for me to compare the instrument transformer inputs to these relays to the secondary values of other metered instrument transformers monitoring the same primary voltage and current signals, it would be necessary to temporarily connect test equipment like voltmeters and clamp on ammeters to measure the input signals to the relays. This practice seems very risky and a plant trip could result if the technician were to make an error while measuring these current and voltage signals. How can I avoid this risk? Also, what if no other instrument transformers are available which monitor the same primary voltage or current signal?

Comparing the input signals to the relays to the outputs of other independent instrument transformers monitoring the same primary current or voltage is just one method of verifying the instrument transformer inputs to the relays but is not required by the Standard. Plants can choose how to best manage their risk. If online testing is deemed too risky, offline tests such as, but not limited to, CT excitation test and PT turns ratio tests can be compared to baseline data and be used in conjunction with CT and PT secondary wiring insulation verification tests to adequately "verify the current and voltage circuit inputs from the voltage and current sensing devices to the protective relays …" while eliminating the risk of tripping an in service generator or transformer. Similarly, this same offline test methodology can be used to verify the relay input voltage and current signals to relays when there are no other instrument transformers monitoring available for purposes of signal comparison.

15.3 Control circuitry associated with protective functions (Table 1-5)

This component of Protection Systems includes the trip coil(s) of the circuit breaker, circuit switcher or any other interrupting device. It includes the wiring from the batteries to the relays. It includes the wiring (or other signal conveyance) from every trip output to every trip coil. It includes any device needed for the correct processing of the needed trip signal to the trip coil of the interrupting device; this requirement is meant to capture inputs and outputs to and from a protective relay that are necessary for the correct operation of the protective functions. In short, every trip path must be verified; the method of verification is optional to the asset owner. An example of testing methods to accomplish this might be to verify, with a volt-meter,

the existence of the proper voltage at the open contacts, the open circuited input circuit and at the trip coil(s). As every parallel trip path has similar failure modes, each trip path from relay to trip coil must be verified. Each trip coil must be tested to trip the circuit breaker (or other interrupting device) at least once. There is a requirement to operate the circuit breaker (or other interrupting device) at least once every six years as part of the complete functional test. If a suitable monitoring system is installed that verifies every parallel trip path then the manual-intervention testing of those parallel trip paths can be eliminated, however the actual operation of the circuit breaker must still occur at least once every six years. This 6-year tripping requirement can be completed as easily as tracking the real-time fault-clearing operations on the circuit breaker or tracking the trip coil(s) operation(s) during circuit breaker routine maintenance actions.

The circuit-interrupting device should not be confused with a motor-operated disconnect. The intent of this Standard is to require maintenance intervals and activities on Protection Systems equipment and not just all system isolating equipment.

It is necessary, however, to classify a device that actuates a high-speed auto-closing ground switch as an interrupting device if this ground switch is utilized in a Protection System and forces a ground fault to occur that then results in an expected Protection System operation to clear the forced ground fault. The SDT believes that this is essentially a transferred-tripping device without the use of communications equipment. If this high-speed ground switch is "…designed to provide protection for the BES…" then this device needs to be treated as any other Protection System component. The control circuitry would have to be tested within 12 years and any electromechanically operated device will have to be tested every 6 years. If the spring-operated ground switch can be disconnected from the solenoid triggering unit then the solenoid triggering unit can easily be tested without the actual closing of the ground blade.

The dc control circuitry also includes each auxiliary tripping relay (94) and each lock-out relay (86) that may exist in any particular trip scheme. If ~~these devices~~the lock-out relays (86) are electromechanical type components then they must be trip tested. The PSMT SDT considers these components to share some similarities in failure modes as electromechanical protective relays; as such there is a six year maximum interval between mandated maintenance tasks unless PBM is applied.

Contacts of the 86 or 94 that pass the trip current on to the circuit interrupting device trip coils will have to be checked as part of the 12 year requirement. Normally-open contacts that are not used to pass a trip signal and normally-closed contacts do not have to be verified. Verification of the tripping paths is the requirement.

While relays that do not respond to electrical quantities are presently excluded from this standard, their control circuits are included if the relay is installed to detect faults on BES Elements. Thus, the control circuit of a BES transformer sudden pressure relay should be verified every 12 years assuming its integrity is not monitored. While a sudden pressure relay control circuit is included within the scope of PRC-005-2, other alarming relay control circuits, i.e. SF-6 low gas, are not included even though they may trip the breaker being monitored.

New technology is also accommodated here; there are some tripping systems that have replaced the traditional hard-wired trip circuitry with other methods of trip-signal conveyance such as fiber-optics. It is the intent of the PSMT SDT to include this, and any other, technology that is used to convey a trip signal from a protective relay to a circuit breaker (or other interrupting device) within this category of equipment. The requirement for these systems is verification of the tripping path.

Monitoring of the control circuit integrity allows for no maintenance activity on the control circuit (excluding the requirement to operate trip coils and electromechanical lockout and/or tripping auxiliary relays). Monitoring of integrity means to monitor for continuity and/or presence of voltage on each trip path. For Ethernet or fiber-optic control systems, monitoring of integrity means to monitor communication ability between the relay and the circuit breaker.

The trip path from a sudden pressure device is a part of the Protection System control circuitry. The sensing element is omitted from PRC-005-2 testing requirements because the SDT is unaware of industry recognized testing protocol for the sensing elements. The SDT believes that Protection Systems that trip (or can trip) the BES should be included. This position is consistent with the currently-approved PRC-005-1, consistent with the SAR for Project 2007-17, and understands this to be consistent with the position of FERC staff.

15.3.1 Frequently Asked Questions:

Is it permissible to verify circuit breaker tripping at a different time (and interval) than when we verify the protective relays and the instrument transformers?

Yes, provided the entire Protective System is tested within the individual components' maximum allowable testing intervals.

The Protection System Maintenance Standard describes requirements for verifying the tripping of circuit breakers. What is this telling me about maintenance of circuit breakers?

Requirements in PRC-005-2 are intended to verify the integrity of tripping circuits, including the breaker trip coil, as well as the presence of auxiliary supply (usually a battery) for energizing the trip coil if a protection function operates. Beyond this, PRC-005-2 sets no requirements for verifying circuit breaker performance, or for maintenance of the circuit breaker.

How do I test each dc Control Circuit trip path, as established in Table 1-5 "Protection System Control Circuitry (Trip coils and auxiliary relays)"?

Table 1-5 specifies that each breaker trip coil~~, auxiliary relay that carries trip current to a trip coil,~~ and lockout relays that carry trip current to a trip coil must be operated within the specified time period. The required operations may be via targeted maintenance activities, or by documented operation of these devices for other purposes such as fault clearing.

Are high-speed ground switch trip coils included in the dc control circuitry?

Yes. PRC-005-2 includes high-speed grounding switch trip coils within the dc control circuitry to the degree that the initiating Protection Systems are characterized as "transmission Protection Systems."

Does the control circuitry and trip coil of a non-BES breaker, tripped via a BES protection component, have to be tested per Table 1.5? (Refer to Table 3)

An example of an otherwise non-BES circuit breaker that is tripped via a BES protection component might be (but is not limited to) a 12.5KV circuit breaker feeding (non-black-start) radial loads but has a trip that originates from an under-frequency (81) relay.

- The relay must be verified.
- The voltage signal to the relay must be verified.
- All of the relevant dc supply tests still apply.
- The unmonitored trip circuit between the relay and any lock-out or auxiliary relay must be verified every 12 years.
- The unmonitored trip circuit between the lock-out (or auxiliary relay) and the non-BES breaker does not have to be proven with an electrical trip.

- In the case where there is no lock-out or auxiliary tripping relay used, the trip circuit to the non-BES breaker does not have to be proven with an electrical trip.
- The trip coil of the non-BES circuit breaker does not have to be individually proven with an electrical trip.

Do I have to verify operation of breaker "a" contacts or any other normally closed auxiliary contacts in the trip path of each breaker as part of my control circuit test?

Operation of normally-closed contacts does not have to be verified. Verification of the tripping paths is the requirement. The continuity of the normally closed contacts will be verified when the tripping path is verified.

15.4 Batteries and DC Supplies (Table 1-4)

IEEE guidelines were consulted to arrive at the maintenance activities for batteries. The following guidelines were used: IEEE 450 (for Vented Lead-Acid batteries), IEEE 1188 (for Valve-Regulated Lead-Acid batteries) and IEEE 1106 (for Nickel-Cadmium batteries).

The currently proposed NERC definition of a Protection System is

- Protective relays which respond to electrical quantities,
- Communications systems necessary for correct operation of protective functions,
- Voltage and current sensing devices providing inputs to protective relays,
- Station dc supply associated with protective functions (including station batteries, battery chargers, and non-battery-based dc supply), and
- Control circuitry associated with protective functions through the trip coil(s) of the circuit breakers or other interrupting devices."
- The station battery is not the only component that provides dc power to a Protection System. In the new definition for Protection System "station batteries" are replaced with "station dc supply" to make the battery charger and dc producing stored energy devices (that are not a battery) part of the Protection System that must be maintained.

The PSMT SDT recognizes that there are several technological advances in equipment and testing procedures that allow the owner to choose how to verify that a battery string is free of open circuits. The term "continuity" was introduced into the Standard to allow the owner to choose how to verify continuity of a battery set by various methods, and not to limit the owner to the two methods recommended in the IEEE standards. Continuity as used in Table 1-4 of the Standard refers to verifying that there is a continuous current path from the positive terminal of the station battery set to the negative terminal. Without verifying continuity of a station battery, there is no way to determine that the station battery is available to supply dc power to the station. An open battery string will be an unavailable power source in the event of loss of the battery charger.

Batteries cannot be a unique population segment of a Performance-Based Maintenance Program (PBM) because there are too many variables in the electrochemical process to

completely isolate all of the performance-changing criteria necessary for using PBM on battery systems. However, nothing precludes the use of a PBM process for any other part of a dc supply besides the batteries themselves.

15.4.1 Frequently Asked Questions:

What constitutes the station dc supply as mentioned in the definition of Protective System?

The previous definition of Protection System includes batteries, but leaves out chargers. The latest definition includes chargers as well as dc systems that do not utilize batteries. This revision of PRC-005-2 is intended to capture these devices that were not included under the previous definition. The station direct current (dc) supply normally consists of two components: the battery charger and the station battery itself. There are also emerging technologies that provide a source of dc supply that does not include either a battery or charger.

Battery Charger - The battery charger is supplied by an available ac source. At a minimum, the battery charger must be sized to charge the battery (after discharge) and supply the constant dc load. In many cases, it may be sized also to provide sufficient dc current to handle the higher energy requirements of tripping breakers and switches when actuated by the protective relays in the Protection System.

Station Battery - Station batteries provide the dc power required for tripping and for supplying normal dc power to the station in the event of loss of the battery charger. There are several technologies of battery that require unique forms of maintenance as established in Table 1-4.

Emerging Technologies - Station dc supplies are currently being developed that use other energy storage technologies beside the station battery to prevent loss of the station dc supply when ac power is lost. Maintenance of these station dc supplies will require different kinds of tests and inspections. Table 1-4 presents maintenance activities and maximum allowable testing intervals for these new station dc supply technologies. However, because these technologies are relatively new the maintenance activities for these station dc supplies may change over time.

What did the PSMT SDT mean by "continuity" of the dc supply?

The PSMT SDT recognizes that there are several technological advances in equipment and testing procedures that allow the owner to choose how to verify that a battery string is free of open circuits. The term "continuity" was introduced into the Standard to allow the owner to choose how to verify continuity of a battery set by various methods, and not to limit the owner to the two methods recommended in the IEEE standards. Continuity as used in Table 1-4 of the Standard refers to verifying that there is a continuous current path from the positive terminal of the station battery set to the negative terminal. Without verifying continuity of a station battery, there is no way to determine that the station battery is available to supply dc power to the station. Whether it is caused from an open cell or a bad external connection, an open battery string will be an unavailable power source in the event of loss of the battery charger.

The current path through a station battery from its positive to its negative connection to the dc control circuits is composed of two types of elements. These path elements are the electrochemical path through each of its cells and all of the internal and external metallic connections and terminations of the batteries in the battery set. If there is loss of continuity (an open circuit) in any part of the electrochemical or metallic path the battery set will not be available for service. In the event of the loss of the ac source or battery charger, the battery must be capable of supplying dc current, both for continuous dc loads and for tripping breakers and switches. Without continuity, the battery cannot perform this function.
At generating stations and large transmission stations where battery chargers are capable of handling the maximum current required by the Protection System, there are still problems that could potentially occur when the continuity through the connected battery is interrupted.

- Many battery chargers produce harmonics which can cause failure of dc power supplies in microprocessor based protective relays and other electronic devices connected to station dc supply. In these cases, the substation battery serves as a filter for these harmonics. With the loss of continuity in the battery, the filter provided by the battery is no longer present.
- Loss of electrical continuity of the station battery will cause, regardless of the battery charger's output current capability, a delayed response in full output current from the charger. Almost all chargers have an intentional 1 to 2 second delay to switch from a low substation dc load current to the maximum output of the charger. This delay would cause the opening of circuit breakers to be delayed which could violate system performance standards.

Monitoring of the station dc supply voltage will not indicate that there is a problem with the dc current path through the battery unless the battery charger is taken out of service. At that time a break in the continuity of the station battery current path will be revealed because there will be no voltage on the station dc circuitry. This particular test method, while proving battery continuity, may not be acceptable to all installations.

Although the Standard prescribes what must be accomplished during the maintenance activity it does not prescribe how the maintenance activity should be accomplished. There are several methods that can be used to verify the electrical continuity of the battery. These are not the only possible methods, simply a sampling of some methods:

- One method is to measure that there is current flowing through the battery itself by a simple clamp on milliamp-range ammeter. A battery is always either charging or discharging. Even when a battery is charged there is still a measurable float charge current that can be detected to verify that there is continuity in the electrical path through the battery.

- A simple test for continuity is to remove the battery charger from service and verify that the battery provides voltage and current to the dc system. However, the behavior of the various dc-supplied equipment in the station should be considered before using this approach.
- Manufacturers of microprocessor controlled battery chargers have developed methods for their equipment to periodically (or continuously) test for battery continuity For example, one manufacturer periodically reduces the float voltage on the battery until current from the battery to the dc load can be measured to confirm continuity.
- Applying test current (as in some ohmic testing devices, or devices for locating dc grounds) will provide a current that when measured elsewhere in the string, will prove that the circuit is continuous.
- Internal ohmic measurements of the cells and units of Lead Acid Batteries (VRLA & VLA) can detect lack of continuity within the cells of a battery string and when used in conjunction with resistance measurements of the battery's external connections can prove continuity. Also some methods of taking internal ohmic measurements by their very nature can prove the continuity of a battery string without having to use the results of resistance measurements of the external connections.
- Specific Gravity tests can infer continuity because without continuity there could be no charging occurring and if there is no charging then Specific Gravity will go down below acceptable levels.

No matter how the electrical continuity of a battery set is verified it is a necessary maintenance activity that must be performed at the intervals prescribed by Table 1-4 to insure that the station dc supply has a path that can provide the required current to the Protection System at all times.

When should I check the station batteries to see if they have sufficient energy to perform as designed?

The answer to this question depends on the type of battery (Valve-Regulated Lead-Acid, Vented Lead-Acid, or Nickel-Cadmium), and the maintenance activity chosen.

For example, if you have a Valve-Regulated Lead-Acid (VRLA) station battery, and you have chosen to evaluate the measured cell/unit internal ohmic values to the battery cell's baseline, you will have to perform verification at a maximum maintenance interval of no greater than every six months. While this interval might seem to be quite short, keep in mind that the 6 month interval is consistent with IEEE guidelines for VRLA batteries; this interval provides an accumulation of data that better shows when a VRLA battery is no longer capable of its design capacity.

If, for a VRLA station battery, you choose to conduct a performance capacity test on the entire station battery as the maintenance activity, then you will have to perform verification at a maximum maintenance interval of no greater than every 3 calendar years.

How is a baseline established for cell/unit internal ohmic measurements?

Establishment of cell/unit internal ohmic baseline measurements should be completed when lead acid batteries are newly installed. To ensure that the baseline ohmic cell/unit values are most indicative of the station batteries ability to perform as designed they should be made upon installation of the station battery and the completion of a performance test of the battery's capacity.

When internal ohmic measurements are taken, consistent test equipment should be used to establish the baseline and used for the future trending of the cells internal ohmic measurements because of variances in test equipment and the type of ohmic measurement used by different manufacturer's equipment. Keep in mind that one manufacturer's "Conductance" test equipment does not produce similar results as another manufacturer's "Impedance" test equipment even though both manufacturers have produced "Ohmic" test equipment.

For all new installations of Valve-Regulated Lead-Acid (VRLA) batteries and Vented Lead-Acid (VLA) batteries, where trending of the cells internal ohmic measurements to a baseline are to be used to determine the ability of the station battery to perform as designed, the establishment of the baseline as described above should be followed at the time of installation to insure the most accurate trending of the cell/unit. However, often for older VRLA batteries the owners of the station batteries have not established a baseline at installation. Also for owners of VLA batteries who want to establish a maintenance activity which requires trending of measured ohmic values to a baseline, there was typically no baseline established at installation of the station battery to trend to.

To resolve the problem of the unavailability of baseline internal ohmic measurements for the individual cell/unit of a station battery, many manufacturers of internal ohmic measurement devices have established libraries of baseline values for VRLA and VLA batteries using their testing device. Also several of the battery manufacturers have libraries of baselines for their products that can be used to trend to. However it is important that when using battery manufacturer supplied data that it is verified that the baseline readings to be used were taken with the same ohmic testing device that will be used for future measurements (for example "Conductance Readings" from one manufacturer's test equipment do not correlate to "Impedance Readings" from a different manufacturer's test equipment). Of course, a measurement of "Conductance" from one manufacturer in a given year could be trended against a measurement of "Conductance" from a different manufacturer's device. This would be true for any unit measurements whether it is conductance, impedance, resistance, voltage, amperage, etc.

Although many manufacturers may have provided base line values which will allow trending of the internal ohmic measurements over the remaining life of a station battery, these baselines are not the actual cell/unit measurements for the battery being trended. It is important to have a baseline tailored to the station battery to more accurately use the tool of ohmic measurement trending. That more customized baseline can only be created by following the establishment of a baseline for each cell/unit at the time of installation of the station battery.

Why determine the State of Charge?

Even though there is no present requirement to check the state of charge of a battery, it can be a very useful tool in determining the overall condition of a battery system. The following discussions are offered as a general reference.

When a battery is fully charged the battery is available to deliver its existing capacity. As a battery is discharged its ability to deliver its maximum available capacity is diminished. It is necessary to determine if the state of charge has dropped to an unacceptable level.

IEEE Standards 450, 1188, and 1106 for Vented Lead-Acid (VLA), Valve-Regulated Lead-Acid (VRLA), and Nickel-Cadmium (NiCd) batteries respectively discuss state of charge in great detail in their standards or annexes to their standards. The above IEEE standards are excellent sources for describing how to determine state of charge of the battery system.

What is State of Charge and how can it be determined in a station battery?

The state of charge of a battery refers to the ratio of residual capacity at a given instant to the maximum capacity available from the battery. When a battery is fully charged the battery is available to deliver its existing capacity. As a battery is discharged its ability to deliver its maximum available capacity is diminished. Knowing the amount of energy left in a battery compared with the energy it had when it was fully charged gives the user an indication of how much longer a battery will continue to perform before it needs recharging.

For Vented Lead-Acid (VLA) batteries which use accessible liquid electrolyte, a hydrometer can be used to test the specific gravity of each cell as a measure of its state of charge. The hydrometer depends on measuring changes in the weight of the active chemicals. As the battery discharges the active electrolyte, ~~sulphuric~~sulfuric acid, is consumed and the concentration of the ~~sulphuric~~sulfuric acid in water is reduced. This in turn reduces the specific gravity of the solution in direct proportion to the state of charge. The actual specific gravity of the electrolyte can therefore be used as an indication of the state of charge of the battery. Hydrometer readings may not tell the whole story, as it takes a while for the acid to get mixed up in the cells of a VLA battery. If measured right after charging, you might see high specific gravity readings at the top of the cell, even though it is much less at the bottom. Conversely if taken shortly after adding water to the cell the specific gravity readings near the top of the cell will be lower than those at the bottom.

Nickel-Cadmium batteries, where the specific gravity of the electrolyte does not change during battery charge and discharge, and Valve-Regulated Lead-Acid (VRLA) batteries, where the electrolyte is not accessible, cannot have their state of charge determined by specific gravity readings. For these two types of batteries and also for VLA batteries, where another method besides taking hydrometer readings is desired, the state of charge may be determined by using the battery charger and taking voltage and current readings during float and equalize (high-rate charge mode). This method is an effective means of determining when the state of charge is low and when it is approaching a fully charged condition which gives the assurance that the available battery capacity will be maximized.

Why determine the Connection Resistance?

High connection resistance can cause abnormal voltage drop or excessive heating during discharge of a station battery. During periods of a high rate of discharge of the station battery a very high resistance can cause severe damage. The maintenance requirement to verify battery terminal connection resistance in Table 1-4 is established to verify that the integrity of all battery electrical connections is acceptable. This verification includes cell-to-cell (intercell) and external circuit terminations. Your method of checking for acceptable values of intercell and terminal connection resistance could be by individual readings or a combination of the two. There are test methods, presently, that can read post termination resistances and resistance values between external posts, there are also test methods presently available that take a combination reading of the post termination connection resistance plus the intercell resistance value plus the post termination connection resistance value. Either of the two methods, or any other method, that can show the adequacy of connections at the battery posts is acceptable.

Adequacy of the electrical terminations can be determined by comparing resistance measurements for all connections taken at the time of station battery's installation to the same

resistance measurements taken at the maintenance interval chosen not to exceed the maximum maintenance interval of Table 1-4. Trending of the interval measurements to the baseline measurements will identify any degradation in the battery connections. When the connection resistance values exceed the acceptance criteria for the connection, the connection is typically disassembled, cleaned, reassembled and measurements taken to verify that the measurements are adequate when compared to the baseline readings.

IEEE Standard 450 for Vented Lead-Acid (VLA) batteries "informative" annex F, and IEEE Standard 1188 for Valve-Regulated Lead-Acid (VRLA) batteries "informative" annex D provide excellent information and examples on performing connection resistance measurements using a microohmmeter and connection detail resistance measurements. Although this information is contained in standards for lead acid batteries the information contained is applicable to Nickel-Cadmium batteries also.

What conditions should be inspected for visible battery cells?

The maintenance requirement to inspect the cell condition of all station battery cells where the cells are visible is a maintenance requirement of Table 1-4. Station batteries are different from any other component in the Protection Station because they are a perishable product due to the electrochemical process which is used to produce dc electrical current and voltage. This inspection is a detailed visual inspection of the cells for abnormalities that occur in the aging process of the cell. In VLA battery visual inspections, some of the things that the inspector is typically looking for on the plates are signs of sulfation of the plates, abnormal color (possible copper contamination) and abnormal conditions such as cracked grids. The visual inspection could look for symptoms of hydration that would indicate that the battery has been left in a completely discharged state for a prolonged period. Besides looking at the plates for signs of aging, all internal connections such as the bus bar connection to each plate and the connections to all posts of the battery need to be visually inspected for abnormalities. In a complete visual inspection for the condition of the cell the cell plates, separators and sediment space of each cell must be looked at for signs of deterioration. An inspection of the station battery's cell condition also includes looking at all terminal posts and cell-to-cell electric connections to ensure they are corrosion free. The case of the battery containing the cell or cells must be inspected for cracks and electrolyte leaks through cracks and the post seals.

This maintenance activity cannot be extended beyond the maximum maintenance interval of Table 1-4 by a Performance-Based Maintenance Program (PBM) because of the electrochemical aging process of the station battery nor can there be any monitoring associated with it because there must be a visual inspection involved in the activity. A remote visual inspection could possibly be done, but its interval must be no greater than the maximum maintenance interval of Table 1-4.

Why consider the ability of the station battery to perform as designed?

Determining the ability of a station battery to perform as designed is critical in the process of determining when the station battery must be replaced or when an individual cell or battery

unit must be removed or replaced. For lead acid batteries the ability to perform as designed can be determined in more than one manner.

The two acceptable methods for proving that a station lead acid battery can perform as designed are based on two different philosophies. The first maintenance activity requires tests and evaluation of the internal ohmic measurements on each of the individual cells/units of the station battery to determine that each component can perform as designed and therefore the entire station battery can be verified to perform as designed. The second activity requires a capacity discharge test of the entire station battery to verify that degradation of one or several components (cells) in the station battery has not deteriorated to a point where the total capacity of the station battery system falls below its designed rating.

The first maintenance activity listed in Table 1-4 for verifying that a station battery can perform as designed uses maximum maintenance intervals for evaluating internal ohmic measurements in relation to their baseline measurements that are based on industry experience, EPRI technical reports and application guides, and the IEEE battery standards. By evaluating the internal ohmic measurements for each cell and comparing that measurement to the cell's baseline ohmic measurement low-capacity cells can be identified and eliminated or the whole station battery replaced to keep the station battery capable of performing as designed. Since the philosophy behind internal ohmic measurement evaluation is based on the fact that each battery component must be verified to be able to perform as designed, the interval for verification by this maintenance activity must be shorter to catch individual cell/unit degradation.

It should be noted that even if a lead acid battery unit is composed of multiple cells where the ohmic measurement of each cell cannot be taken, the ohmic test can still be accomplished. The data produced becomes trending data on the multi-cell unit instead of trending individual cells. Care must be taken in the evaluation of the ohmic measures of entire units to detect a bad cell that has a poor ohmic value. Good ohmic values of other cells in the same battery unit can make it harder to detect the poor ohmic measurement of a bad cell because the only ohmic measurement available is of all the cells in the battery unit.

This first maintenance activity is applicable only for Vented Lead-Acid (VLA) and Valve-Regulated Lead-Acid (VRLA) batteries; this trending activity has not shown to be effective for NiCd batteries thus the only choices for owners of NiCd batteries are the performance tests of the second activity (see applicable IEEE guideline for specifics on performance tests).

The second maintenance activity listed in Table 1-4 for verifying that a station battery can perform as designed uses maximum maintenance intervals for capacity testing that were designed to align with the IEEE battery standards. This maintenance activity is applicable for Vented Lead-Acid, Valve-Regulated Lead-Acid, and Nickel-Cadmium batteries.

The maximum maintenance interval for discharge capacity testing is longer than the interval for testing and evaluation of internal ohmic cell measurements. An individual component of a station battery may degrade to an unacceptable level without causing the total station battery to fall below its designed rating under capacity testing.

IEEE Standards 450, 1188, and 1106 for vented lead-acid (VLA), Valve-Regulated Lead-Acid (VRLA), and Nickel-Cadmium (NiCd) batteries respectively (which together are the most

commonly used substation batteries on the BES) go into great detail about capacity testing of the entire battery set to determine that a battery can perform as designed or needs to be replaced soon.

Why in Table 1-4 of PRC-005-2 is there a maintenance activity to inspect the structural intergrity of the battery rack?

The three IEEE standards (1188, 450, and 1106) for VRLA, Vented Lead-Acid, and Nickel-Cadmium batteries all recommend that as part of any battery inspection the battery rack should be inspected. The purpose of this inspection is to verify that the battery rack is correctly installed and has no deterioration that could weaken its structural integrity.

Because the battery rack is specifically designed for the battery that is mounted on it, weakening of its structural members by rust or corrosion can physically jeopardize the battery.

What is required to comply with the "Unintentional dc Grounds" requirement?

In most cases, the first ground that appears on a battery is not a problem. It is the unintentional ground that appears on the opposite pole that becomes problematic. Even then many systems are designed to operate favorably under some unintentional DC ground situations. It is up to the owner of the Protection System to determine if corrective actions are needed on detected unintentional DC grounds. The Standard merely requires that a check be made for the existence of Unintentional DC Grounds. Obviously a "check-off" of some sort will have to be devised by the inspecting entity to document that a check is routinely done for Unintentional DC Grounds because of the possible consequences to the Protection System.

Where the Standard refers to "all cells" is it sufficient to have a documentation method that refers to "all cells" or do we need to have separate documentation for every cell? For example do I need 60 individual documented check-offs for good electrolyte level or would a single check-off per bank be sufficient?

A single check-off per battery bank is sufficient for documentation, as long as the single check-off attests to checking all cells/units.

Does this Standard refer to Station batteries or all batteries, for example Communications Site Batteries?

This Standard refers to Station Batteries. The drafting team does not believe that the scope of this Standard refers to communications sites. The batteries covered under PRC-005-2 are the batteries that supply the trip current to the trip coils of the interrupting devices that are a part of the Protection System. The SDT believes that a loss of power to the communications systems at a remote site would cause the communications systems associated with protective relays to alarm at the substation. At this point the corrective actions can be initiated.

My VRLA batteries have multiple-cells within an individual battery jar (or unit); how am I expected to comply with the cell-to-cell ohmic measurement requirements on these units that I cannot get to?

Measurement of cell/unit (not all batteries allow access to "individual cells" some "units" or jars may have multiple cells within a jar) internal ohmic values of all types of lead acid batteries where the cells of the battery are not visible is a station dc supply maintenance activity in Table 1-4.

What are cell/unit internal ohmic measurements?

With the introduction of Valve-Regulated Lead-Acid (VRLA) batteries to station dc supplies in the 1980's several of the standard maintenance tools that are used on Vented Lead-Acid (VLA) batteries were unable to be used on this new type of lead-acid battery to determine its state of health. The only tools that were available to give indication of the health of these new VRLA batteries were voltage readings of the total battery voltage, the voltage of the individual cells and periodic discharge tests.

In the search for a tool for determining the health of a VRLA battery several manufacturers studied the electrical model of a lead acid battery's current path through its cell. The overall battery current path consists of resistance and inductive and capacitive reactance. The inductive reactance in the current path through the battery is so minuscule when compared to the huge capacitive reactance of the cells that it is often ignored in most circuit models of the battery cell. Taking the basic model of a battery cell manufacturers of battery test equipment have developed and marketed testing devices to take measurements of the current path to detect degradation in the internal path through the cell.

In the battery industry these various types of measurements are referred to as ohmic measurements. Terms used by the industry to describe ohmic measurements are ac conductance, ac impedance, and dc resistance. They are defined by the test equipment providers and IEEE and refer to the method of taking ohmic measurements of a lead acid battery. For example in one manufacturer's ac conductance equipment measurements are taken by applying a voltage of a known frequency and amplitude across a cell or battery unit and observing the ac current flow it produces in response to the voltage. A manufacturer of an ac impedance meter measures ac current of a known frequency and amplitude that is passed through the whole battery string and determines the impedances of each cell or unit by measuring the resultant ac voltage drop across them. On the other hand dc resistance of a cell is measured by a third manfacturer's equipment by applying a dc load across the cell or unit and measuring the step change in both the voltage and current to calculate the internal dc resistance of the cell or unit.

It is important to note that because of the rapid development of the market for ohmic measurement devices there were no standards developed or used to mandate the test signals used in making ohmic measurements. Manufacturers using proprietary methods and applying different frequencies and magnitudes for their signals have developed a diversity of measurement devices. This diversity in test signals coupled with the three different types of ohmic measurements techniques (impedance conductance and resistance) make it impossible

to always get the same ohmic measurement for a cell with different ohmic measurement devices. However, IEEE has recognized the great value for choosing one device for ohmic measurement, no matter who makes it or the method to calculate the ohmic measurement. The only caution given by IEEE and the battery manufacturers is that when trending the cells of a lead acid station battery consistent ohmic measurement devices should be used to establish the baseline measurement and to trend the battery set for its entire life. A consistent measurement device should not be confused with a requirement to always stay with the same manufacturer. After all volts are volts, impedance is impedance, etc. It is just important to not expect to get consistent "Impedance" data if you switch to a "Conductance" measuring device in the middle of your trending program.

For VRLA batteries both IEEE Standard 1188 (Maintenance, Testing and Replacement of VRLA Batteries) and IEEE Standard 1187 (Installation Design and Installation of VRLA Batteries) recognize the importance of the maintenance activity of establishing a baseline for "cell/unit internal ohmic measurements (impedance, conductance and resistance)" and trending them at frequent intervals over the life of the battery. There are extensive discussions about the need for taking these measurements in these standards. IEEE Standard 1188 requires taking internal ohmic values as described in Annex C4 during regular inspections of the station battery. For VRLA batteries IEEE Standard 1188 in talking about the necessity of establishing a base line and trending it over time says, "depending on the degree of change a performance test, cell replacement or other corrective action may be necessary.

For VLA batteries IEEE Standard 484 (Installation of VLA batteries) gives several guidelines about establishing baseline measurements on newly installed lead acid stationary batteries. The standard also discusses the need to look for significant changes in the ohmic measurements, the caution that measurement data will differ with each type of model of instrument used, and lists a number of factors that affect ohmic measurements.

At the beginning of the 21st century EPRI conducted a series of extensive studies to determine the relationship of internal ohmic measurements to the capacity of a lead acid battery cell. The studies indicated that internal ohmic measurements were in fact a good indicator of a lead acid battery cell's capacity but because users often were only interested in the total station battery capacity and the technology does not precisely predict overall battery capacity, if a user only needs "an accurate measure of the overall battery capacity" they should "perform a battery capacity test."

Prior to the EPRI studies some large and small companies which owned and maintained station dc supplies in NERC Protection Systems developed maintenance programs where trending of ohmic measurements of cells/units of the station's battery became the maintenance activity for determining if the station battery could perform as designed. By evaluation of the trending of the ohmic measurements over time the owner could track the performance of the individual components of the station battery and determine if a total station battery or components of it required capacity testing, removal, replacement or in many instances replacement of the entire station battery. By taking this approach these owners have eliminated having to perform capacity testing at prescribed intervals to determine if a battery needs to be replaced and are still able to effectively determine if a station battery can perform as designed.

Why verify voltage?

There are two required maintenance activities associated with verification of dc voltages in Table 1-4. These two required activities are to verify station dc supply voltage and float voltage of the battery charger, and have different maximum maintenance intervals. Both of these voltage verification requirements relate directly to the battery charger maintenance.

The verification of the dc supply voltage is simply an observation of battery voltage to prove that the charger has not been lost or is not malfunctioning~~.~~; a reading taken from the battery charger panel meter or even SCADA values of the dc voltage could be some of the ways that one could satisfy the requirements. Low battery voltage below float voltage indicates that the battery may be on discharge and if not corrected the station battery could discharge down to some extremely low value that will not operate the Protection System. High voltage, close to or above the maximum allowable dc voltage for equipment connected to the station dc supply indicates the battery charger may be malfunctioning by producing high dc voltage levels on the Protection System. If corrective actions are not taken to bring the high voltage down, the dc power supplies and other electronic devices connected to the station dc supply may be damaged. The maintenance activity of verifying the float voltage of the battery charger is not to prove that a charger is lost or producing high voltages on the station dc supply, but rather to prove that the charger is properly floating the battery within the proper voltage limits. As above, there are many ways that this requirement can be met.

Why check for the electrolyte level?

In Vented Lead-Acid (VLA) and Nickel-Cadmium (NiCd) batteries the visible electrolyte level must be checked as one of the required maintenance activities that must be performed at an interval that is equal to or less than the maximum maintenance interval of Table 1-4. Because the electrolyte level in Valve-Regulated Lead-Acid (VRLA) batteries cannot be observed there is no maintenance activity listed in Table 1-4 of the Standard for checking the electrolyte level.

Low electrolyte level of any cell of a VLA or NiCd station battery is a condition requiring correction. Typically the electrolyte level should be returned to an acceptable level for both types of batteries (VLA and NiCd) by adding distilled or other approved-quality water to the cell. Often people confuse the interval for watering all cells required due to evaporation of the electrolyte in the station battery cells with the maximum maintenance interval required to check the electrolyte level. In many of the modern station batteries the jar containing the electrolyte is so large with the band between the high and low electrolyte level so wide that normal evaporation which would require periodic watering of all cells takes several years to occur. However, because loss of electrolyte due to cracks in the jar, overcharging of the station battery or other unforeseen events can cause rapid loss of electrolyte the shorter maximum maintenance intervals for checking the electrolyte level are required. A low level of electrolyte in a VLA battery cell which exposes the tops of the plates can cause the exposed portion of the plates to accelerated sulfation resulting in loss of cell capacity. Also, in a VLA battery where the electrolyte level goes below the end of the cell withdrawal tube or filling funnel, gasses can exit the cell by the tube instead of the flame arrester and present an explosion hazard.

Why does it appear that there are two maintenance activities in Table 1-4(b) (for VRLA batteries) that appear to be the same activity and have the same maximum maintenance interval?

There are two different and distinct reasons for doing almost the same maintenance activity at the same interval for Valve-Regulated Lead-Acid (VRLA) batteries. The first similar activity for VRLA batteries (Table 1-4(b)) that has the same maximum maintenance interval is to "measure battery cell/unit internal ohmic values." Part of the reason for this activity is because the visual inspection of the cell condition is unavailable for VRLA batteries. Besides the requirement to measure the internal ohmic measurements of VRLA batteries to determine the internal health of the cell, the maximum maintenance interval for this activity is significantly shorter than the interval for Vented Lead-Acid (VLA) due to some unique failure modes for VRLA batteries. Some of the potential problems that VRLA batteries are susceptible to that do not affect VLA batteries are thermal runaway, cell dry-out, and cell reversal when one cell has a very low capacity.

The other similar activity listed in Table 1-4(b) is "verify that the station battery can perform as designed by evaluating the measured cell/unit internal ohmic values to station battery baseline." This activity allows an owner the option to choose between this activity with its much shorter maximum maintenance interval or the longer maximum maintenance interval for the maintenance activity to "Verify that the station battery can perform as designed by conducting a performance, service, or modified performance capacity test of the entire battery bank."

For VRLA batteries, there are two drivers for internal ohmic readings. The first driver is for a means to trend battery life. A comparison and trending against the baseline new battery ohmic reading can be used in lieu of capacity tests to determine remaining battery life. Remaining battery life is analogous to stating that the battery is still able to "perform as designed". This is the intent of the "~~capacity~~perform as designed 6 month test" at Row 4 on Table 1-4b.

The second big driver is VRLA batteries tendency for thermal runaway. This is the intent of the "thermal runaway test" at Row 2 on Table 1-4b. In order to detect a cell in thermal runaway, you need not have a formal trending program to track when a cell has reached a 25% increase over baseline. Rather it will stick out like a sore thumb when compared to the other cells in a string at a given point in time regardless of the age of all the cells in a string. In other words, if the battery is 10 years old and all the cells are gradually approaching a 25% increase in ohmic values over baseline, then you have a battery which is approaching end of life. You need to get ready to buy a new battery but you do not have to worry about an impending catastrophic failure. On the other hand, if the battery is five years old and you have one cell that has a markedly different ohmic reading than all the other cells, then you need to be worried that this cell is in thermal runaway and catastrophic failure is imminent.

If an entity elects to use a capacity test rather than a cell ohmic value trending program, this does not eliminate the need to be concerned about thermal runaway – the entity still needs to do the 6 month readings and look for cells which are outliers in the string but they need not trend results against the factory/as new baseline. Some entities will not mind the extra administrative burden of having the ongoing trending program against baseline - others would

rather just do the capacity test and not have to trend the data against baseline. Nonetheless, all entities must look for ohmic outliers on a 6 month basis.

It is possible to accomplish both tasks listed (trend testing for capacity and testing for thermal runaway candidates) with the very same ohmic test. It becomes an analysis exercise of watching the trend from baselines and watching for the oblique cell measurement.

15.5 Associated communications equipment (Table 1-2)

The equipment used for tripping in a communications assisted trip scheme is a vital piece of the trip circuit. Remote action causing a local trip can be thought of as another parallel trip path to the trip coil that must be tested.

Besides the trip output and wiring to the trip coil(s) there is also a communications medium that must be maintained.

Newer technologies now exist that achieve communications-assisted tripping without the conventional wiring practices of older technology.

For example: older technologies may have included *Frequency Shift Key* methods. This technology requires that guard and trip levels be maintained.

The actual tripping path(s) to the trip coil(s) may be tested as a parallel trip path within the dc control circuitry tests.

Emerging technologies transfer digital information over a variety of carrier mediums that are then interpreted locally as trip signals.

The requirements apply to the communicated signal needed for the proper operation of the protective relay trip logic or scheme. Therefore this Standard is applied to equipment used to convey both trip signals (permissive or direct) and block signals.

It was the intent of this Standard to require that a test be performed on any communications-assisted trip scheme regardless of the vintage of technology.The essential element is that the tripping (or blocking) occurs locally when the remote action has been asserted; or that the tripping (or blocking) occurs remotely when the local action is asserted. Note that the required testing can still be done within the concept of testing by overlapping segments. Associated communications equipment can be (but is not limited to) testing at other times and different frequencies as the protective relays, the individual trip paths and the affected circuit interrupting devices.

Some newer installations utilize digital signals over fiber-optics from the protective relays in the control house to the circuit interrupting device in the yard. This method of tripping the circuit breaker, even though it might be considered communications, must be maintained per the dc control circuitry maintenance requirements.

15.5.1 Frequently Asked Questions:

What are some examples of mechanisms to check communications equipment functioning?

For unmonitored Protection Systems, various types of communications systems will have different facilities for on-site integrity checking to be performed at least every ~~three~~four months during a substation visit. Some examples are, but not limited to:

- On-off power-line carrier systems can be checked by performing a manual carrier keying test between the line terminals, or carrier check-back test from one terminal.
- Systems which use frequency-shift communications with a continuous guard signal (over a telephone circuit, analog microwave system, etc.) can be checked by observing for a loss-of-guard indication or alarm. For frequency-shift power-line carrier systems, the guard signal level meter can also be checked.
- Hard-wired pilot wire line Protection Systems typically have pilot-wire monitoring relays that give an alarm indication for a pilot wire ground or open pilot wire circuit loop.
- Digital communications systems typically have a data reception indicator or data error indicator (based on loss of signal, bit error rate, or frame error checking).

For monitored Protection Systems, various types of communications systems will have different facilities for monitoring the presence of the communications channel, and activating alarms that can be monitored remotely. Some examples are, but not limited to:

- On-off power-line carrier systems can be shown to be operational by automated periodic power-line carrier check-back tests, with remote alarming of failures.
- Systems which use a frequency-shift communications with a continuous guard signal (over a telephone circuit, analog microwave system, etc.) can be remotely monitored with a loss-of-guard alarm or low signal level alarm.
- Hard-wired pilot wire line Protection Systems can be monitored by remote alarming of pilot-wire monitoring relays.
- Digital communications systems can activate remotely monitored alarms for data reception loss or data error indications.
- Systems can be queried for the data error rates.

For the highest degree of monitoring of Protection Systems, the communications system must monitor all aspects of the performance and quality of the channel that show it meets the design performance criteria, including monitoring of the channel interface to protective relays.

- In many communications systems signal quality measurements including signal-to-noise ratio, received signal level, reflected transmitter power or standing wave ratio, propagation delay, and data error rates are compared to alarm limits. These alarms are connected for remote monitoring.

- Alarms for inadequate performance are remotely monitored at all times, and the alarm communications system to the remote monitoring site must itself be continuously monitored to assure that the actual alarm status at the communications equipment location is continuously being reflected at the remote monitoring site.

What is needed for the ~~3~~4-month inspection of communications-assisted trip scheme equipment?

The ~~3~~4-month inspection applies to unmonitored equipment. An example of compliance with this requirement might be, but is not limited to:

With each site visit, check that the equipment is free from alarms, check any metered signal levels, and that power is still applied. While this might be explicit for a particular type of equipment (i.e. FSK equipment), the concept should be that the entity verify that the communications equipment that is used in a Protection System is operable through a cursory inspection and site visit. This site visit can be eliminated on this particular example if the FSK equipment had a monitored alarm on Loss of Guard. Blocking carrier systems with auto checkbacks will present an alarm when the channel fails allowing a visual indication. With no auto checkback, the channel integrity will need to be verified by a manual checkback or a two ended signal check. This check could also be eliminated by bring the auto checkback failure alarm to the monitored central location.

Does a fiber optic I/O scheme used for breaker tripping or control within a station, for example - transmitting a trip signal or control logic between the control house and the breaker control cabinet, constitute a communications system?

This equipment is presently classified as being part of the Protection System Control Circuitry and tested per the portions of Table 1 applicable to Protection System Control Circuitry rather than those portions of the table applicable to communications equipment.

In Table 1-2, the Maintenance Activities section of the Protective System Communications Equipment and Channels refers to the quality of the channel meeting "performance criteria". What is meant by performance criteria?

Protection System communications channels must have a means of determining if the channel and communications equipment is operating normally. If the channel is not operating normally an alarm will be indicated. For unmonitored systems this alarm will probably be on the panel. For monitored systems, the alarm will be transmitted to a remote location.

Each entity will have established a nominal performance level for each protective system communications channel that is consistent with proper functioning of the Protection System. If that level of nominal performance is not being met, the system will go into alarm. Following are some examples of protective system communications channel performance measuring:

- For direct transfer trip using a frequency shift power line carrier channel, a guard level monitor is part of the equipment. A normal receive level is established when the system is calibrated and if the signal level drops below an established level, the system will indicate an alarm.
- An on-off blocking signal over power line carrier is used for directional comparison blocking schemes on transmission lines. During a fault, block logic is sent to the remote relays by turning on a local transmitter and sending the signal over the power line to a receiver at the remote end. This signal is normally off so continuous levels cannot be checked. These schemes use check-back testing to determine channel performance. A predetermined signal sequence is sent to the remote end and the remote end decodes

this signal and sends a signal sequence back. If the sending end receives the correct information from the remote terminal, the test passes and no alarm is indicated. Full power and reduced power tests are typically run. Power levels for these tests are determined at the time of calibration.

- Pilot wire relay systems use a hardwire communications circuit to communicate between the local and remote ends of the protective zone. This circuit is monitored by circulating a dc current between the relay systems. A typical level may be 1 mA. If the level drops below the setting of the alarm monitor, the system will indicate an alarm.
- Modern digital relay systems use data communications to transmit relay information to the remote end relays. An example of this is a line current differential scheme commonly used on transmission lines. The protective relays communicate current magnitude and phase information over the communications path to determine if the fault is located in the protective zone. Quantities such as digital packet loss, bit error rate and channel delay are monitored to determine the quality of the channel. These limits are determined and set during relay commissioning. Once set, any channel quality problems that fall outside the set levels will indicate an alarm.

The previous examples show how some protective relay communications channels can be monitored and how the channel performance can be compared to performance criteria established by the entity. This Standard does not state what the performance criteria will be; it just requires that the entity establish nominal criteria so protective system channel monitoring can be performed.

How is the performance criteria of Protection System communications equipment involved in the maintenance program?

An entity determines the acceptable performance criteria depending on the technology implemented. If the communications channel performance of a Protection System varies from the pre-determined performance criteria for that system then these results should be investigated and resolved.

How do I verify the A/D converters of microprocessor-based relays?

There are a variety of ways to do this. Two examples would be: using values gathered via data communications and automatically comparing these values with values from other sources, or using groupings of other measurements (such as vector summation of bus feeder currents) for comparison. Many other methods are possible.

15.6 Alarms (Table 2)

In addition to the tables of maintenance for the components of a Protection System, there is an additional table added for alarms. This additional table was added for clarity. This enabled the common alarm attributes to be consolidated into a single spot and thus make it easier to read the Tables 1-1 through 1-5. The alarms need to arrive at a site wherein a corrective action can be initiated. This could be a control room, operations center, etc. The alarming mechanism can

be a Standard alarming system or an auto-polling system, the only requirement is that the alarm be brought to the action-site within 24 hours. This effectively makes manned-stations equivalent to monitored stations. The alarm of a monitored point (for example a monitored trip path with a lamp) in a manned-station now makes that monitored point eligible for monitored status. Obviously, these same rules apply to a non-manned-station, which is that if the monitored point has an alarm that is auto-reported to the operations center (for example) within 24 hours then it too is considered monitored.

15.6.1 Frequently Asked ~~*Question*~~Questions:

Why are there activities defined for varying degrees of monitoring a Protection System component when that level of technology may not yet be available?

There may already be some equipment available that is capable of meeting the highest levels of monitoring criteria listed in the Tables. However, even if there is no equipment available today that can meet this level of monitoring the Standard establishes the necessary requirements for when such equipment becomes available. By creating a roadmap for development, this provision makes the Standard technology-neutral. The Standard Drafting Team wants to avoid the need to revise the Standard in a few years to accommodate technology advances that may be coming to the industry.

Does a fail-safe "form b" contact that is alarmed to a 24/7 operation center classify as an alarm path with monitoring?

If the fail-safe "form-b" contact that is alarmed to a 24/7 operation center causes the alarm to activate for failure of any portion of the alarming path from the alarm origin to the 24/7 operations center then this can be classified as an alarm path with monitoring.

15.7 Distributed UFLS and Distributed UVLS Systems (Table 3)

Distributed UFLS and Distributed UVLS Systems have their maintenance activities documented in Table 3 due to their distributed nature allowing reduced maintenance activities and extended maximum maintenance intervals. Relays have the same maintenance activities and intervals as Table 1-1. Voltage and current sensing devices have the same maintenance activity and interval as Table 1-2. DC systems need only have their voltage read at the relay every twelve years. Control circuits have the following maintenance activities every twelve years:

- Verify the trip path between the relay and lock-out and/or auxiliary tripping device(s).
- Verify operation of any lock-out ~~and/or auxiliary tripping device(s)~~ used in the trip circuit.
- No verification of trip path required between the lock-out (and/or auxiliary tripping device) and the non-BES interrupting device~~(s)~~.
- No verification of trip path required between the relay and trip coil for circuits that have no lock-out and/or auxiliary tripping device(s).
- No verification of trip coil required.

No maintenance activity is required for associated communication systems for distributed UFLS~~/~~ and distributed UVLS schemes.

Non-BES interrupting devices that participate in a distributed UFLS or distributed UVLS scheme are excluded from the tripping requirement, and part of the control circuit test requirement; however the part of the trip path control circuitry between the load shed relay and lock-out or auxiliary tripping relay must be tested at least once every 12 years. In the case where there is no lock-out or auxiliary tripping relay used in a distributed UFLS or UVLS scheme which is not part of the BES, there is no control circuit test requirement. There are many circuit interrupting devices in the distribution system that will be operating for any given under-frequency event that requires tripping for that event. A failure in the tripping-action of a single distributed system circuit breaker (or non-BES equipment interruption device) will be far less significant than, for example, any single Transmission Protection System failure such as a failure of a bus differential lock-out relay. While many failures of these distributed system circuit breakers (or non-BES equipment interruption device) could add up to be significant, it is also believed that many circuit breakers are operated often on just fault clearing duty and therefore these circuit breakers are operated at least as frequently as any requirements that appear in this Standard.

There are times when a Protection System component will be used on a BES device as well as a non-BES device, such as a battery bank that serves both a BES circuit breaker and a non-BES interrupting device used for UFLS. In such a case, the battery bank (or other Protection System component) will be subject to the Tables of the Standard because it is used for the BES.

15.7.1 Frequently Asked Questions:

The standard reaches further into the distribution system than we would like for UFLS and UVLS …

While UFLS and UVLS equipment are located on the distribution network, their job is to protect the Bulk Electric System. This is not beyond the scope of NERC's 215 authority.

FPA section 215(a) definitions section defines "bulk-power system as (A) facilities and control systems necessary for operating an interconnected electric energy transmission network (or any portion thereof)." That definition then is limited by a later statement which adds the term bulk-power system "does not include facilities used in the local distribution of electric energy." Also, section 215 also covers users, owners, and operators of bulk-power facilities.

UFLS and UVLS (when the UVLS is installed to prevent system voltage collapse or voltage instability for BES reliability) are not "used in the local distribution of electric energy" despite their location on local distribution networks. Further, if UFLS/UVLS facilities were not covered by the Reliability Standards, then in order to protect the integrity of the BES during under-frequency or under-voltage events, that load would have to be shed at the transmission bus to ensure the load-generation balance and voltage stability is maintained on the BES.

15.8 Examples of Evidence of Compliance

To comply with the requirements of this Standard an entity will have to document and save evidence. The evidence can be of many different forms. The Standard Drafting Team recognizes that there are concurrent evidence requirements of other NERC Standards that could, at times, fulfill evidence requirements of this Standard.

15.8.1 Frequently Asked Questions:

What forms of evidence are acceptable?

Acceptable forms of evidence, as relevant for the Requirement being documented, include but are not limited to:

- Process documents or plans
- Data (such as relay settings sheets, photos, SCADA, and test records)
- Database lists, records and/or screen shots that demonstrate compliance information
- Prints, diagrams and/or schematics
- Maintenance records
- Logs (operator, substation, and other types of log)
- Inspection forms
- Mail, memos, or email proving the required information was exchanged, coordinated, submitted or received
- Check-off forms (paper or electronic)
- Any record that demonstrates that the maintenance activity was known, accounted for, and/or performed.

If I replace a failed Protection System component with another component, what testing do I need to perform on the new component?

In order to reset the Table 1 maintenance interval for the replacement component, all relevant Table 1 activities for the component should be performed.

I have evidence to show compliance for PRC-016 ("Special Protection System Misoperation"). Can I also use it to show compliance for this Standard, PRC-005-2?

Maintaining evidence for operation of Special Protection Systems could concurrently be utilized as proof of the operation of the associated trip coil (provided one can be certain of the trip coil involved). Thus the reporting requirements that one may have to do for the Misoperation of a Special Protection Scheme under PRC-016 could work for the activity tracking requirements under this PRC-005-2.

I maintain disturbance records which show Protection System operations. Can I use these records to show compliance?

These records can be concurrently utilized as dc trip path verifications to the degree that they demonstrate the proper function of that dc trip path.

I maintain test reports on some of my components of my Protection System components. Can I use these test reports to show that I have verified a maintenance activity?

Yes.

~~16. References~~

References

1. Protection System Maintenance: A Technical Reference. Prepared by the System Protection and Controls Task Force of the NERC Planning Committee. Dated September 13, 2007.

2. "Predicating The Optimum Routine test Interval For Protection Relays," by J. J. Kumm, M.S. Weber, D. Hou, and E. O. Schweitzer, III, IEEE Transactions on Power Delivery, Vol. 10, No. 2, April 1995.

3. "Transmission Relay System Performance Comparison For 2000, 2001, 2002, 2003, 2004 and 2005," Working Group I17 of Power System Relaying Committee of IEEE Power Engineering Society, May 2006.

4. "A Survey of Relaying Test Practices," Special Report by WG I11 of Power System Relaying Committee of IEEE Power Engineering Society, September 16, 1999.

5. "Transmission Protective Relay System Performance Measuring Methodology," Working Group I3 of Power System Relaying Committee of IEEE Power Engineering Society, January 2002.

6. "Processes, Issues, Trends and Quality Control of Relay Settings," Working Group C3 of Power System Relaying Committee of IEEE Power Engineering Society, December 2006.

7. "Proposed Statistical Performance Measures for Microprocessor-Based Transmission-Line Protective Relays, Part I - Explanation of the Statistics, and Part II - Collection and Uses of Data," Working Group D5 of Power System Relaying Committee of IEEE Power Engineering Society, May 1995; Papers 96WM 016-6 PWRD and 96WM 127-1 PWRD, 1996 IEEE Power Engineering Society Winter Meeting.

8. "Analysis And Guidelines For Testing Numerical Protection Schemes," Final Report of CIGRE WG 34.10, August 2000.

9. "Use of Preventative Maintenance and System Performance Data to Optimize Scheduled Maintenance Intervals," H. Anderson, R. Loughlin, and J. Zipp, Georgia Tech Protective Relay Conference, May 1996.

PSMT SDT References

10. "Essentials of Statistics for Business and Economics" Anderson, Sweeney, Williams, 2003

11. "Introduction to Statistics and Data Analysis" - Second Edition, Peck, Olson, Devore, 2005

12. "Statistical Analysis for Business Decisions" Peters, Summers, 1968

Figures

Figure 1: Typical Transmission System

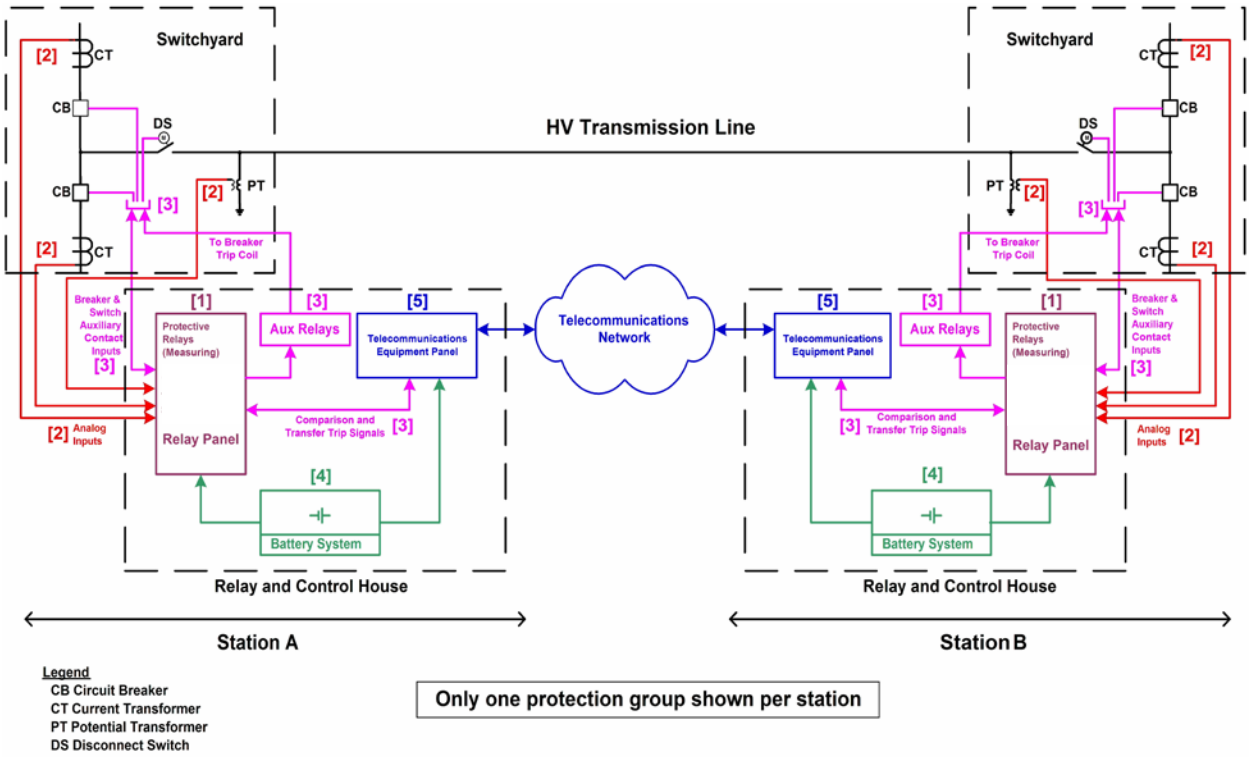

For information on components, see ***Figure 1 & 2 Legend – Components of Protection Systems***

Figure 2: Typical Generation System

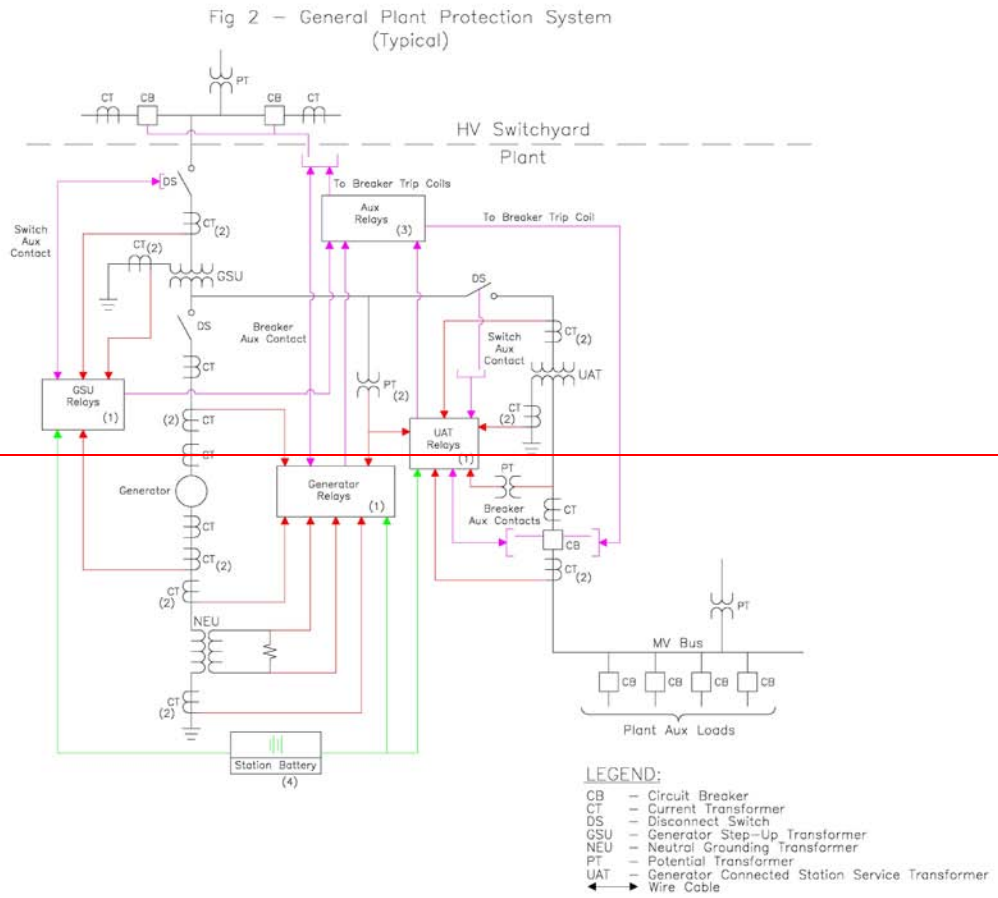

Fig 2 – General Plant Protection System (Typical)

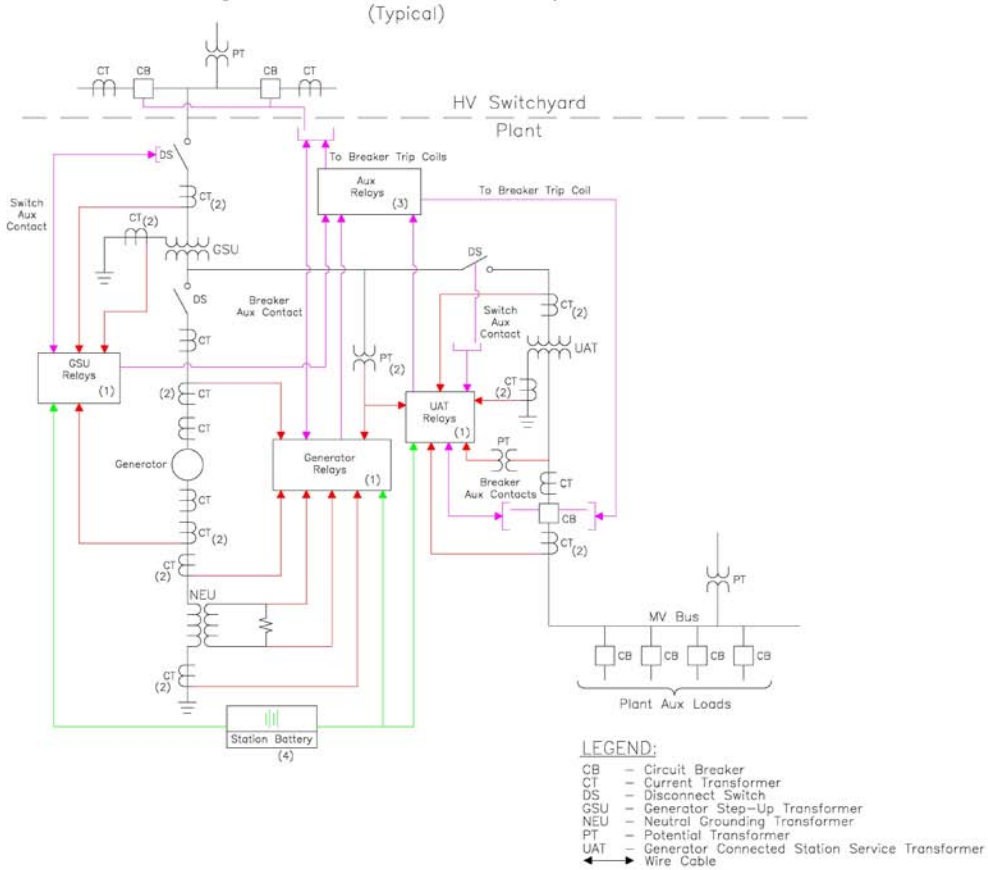

For information on components, see ***Figure 1 & 2 Legend – Components of Protection Systems***

Figure 1 & 2 Legend – Components of Protection Systems

Number in Figure	Component of Protection System	Includes	Excludes
1	Protective relays which respond to electrical quantities	All protective relays that use current and/or voltage inputs from current & voltage sensors and that trip the 86, 94 or trip coil.	Devices that use non-electrical methods of operation including thermal, pressure, gas accumulation, and vibration. Any ancillary equipment not specified in the definition of Protection Systems. Control and/or monitoring equipment that is not a part of the automatic tripping action of the Protection System
2	Voltage and current sensing devices providing inputs to protective relays	The signals from the voltage & current sensing devices to the protective relay input.	Voltage & current sensing devices that are not a part of the Protection System, including sync-check systems, metering systems and data acquisition systems.
3	Control circuitry associated with protective functions	All control wiring (or other medium for conveying trip signals) associated with the tripping action of 86 devices, 94 devices or trip coils (from all parallel trip paths). This would include fiber-optic systems that carry a trip signal as well as hard-wired systems that carry trip current.	Closing circuits, SCADA circuits, other devices in control scheme not passing trip current
4	Station dc supply	Batteries and battery chargers and any control power system which has the function of supplying power to the protective relays, associated trip circuits and trip coils.	Any power supplies that are not used to power protective relays or their associated trip circuits and trip coils.
5	Communications systems necessary for correct operation of protective functions	Tele-protection equipment used to convey specific information, in the form of analog or digital signals, necessary for the correct operation of protective functions.	Any communications equipment that is not used to convey information necessary for the correct operation of protective functions.

Additional information can be found in References

Appendix A

Appendix A

The following illustrates the concept of overlapping verifications and tests as summarized in Section 10 of the paper. As an example, Figure A-1 shows protection for a critical transmission line by carrier blocking directional comparison pilot relaying. The goal is to verify the ability of the entire two-terminal pilot protection scheme to protect for line faults, and to avoid over-tripping for faults external to the transmission line zone of protection bounded by the current transformer locations.

Figure A-1

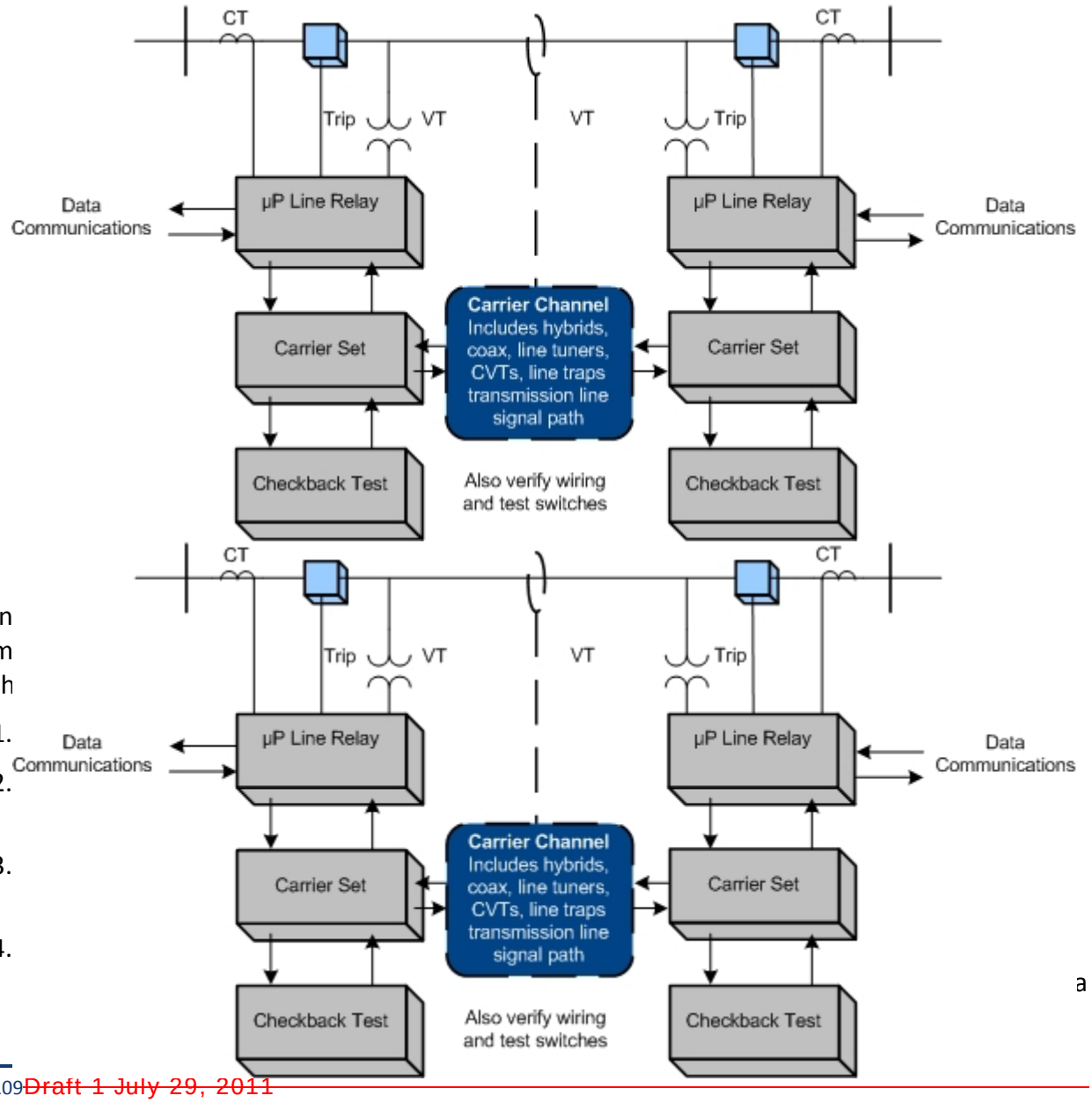

In
m
th

1.
2.
3.
4.

a

other relays, meters, or DFRs. The other readings may be from redundant relaying or measurement systems or they may be derived from values in other protection zones. Comparison with other such readings to within required relaying accuracy verifies Voltage & Current Sensing Devices, wiring, and analog signal input processing of the relays. One effective way to do this is to utilize the relay metered values directly in SCADA, where they can be compared with other references or state estimator values.

5. Breaker status indication from auxiliary contacts is verified in the same way as in (2). Status indications must be consistent with the flow or absence of current.
6. Continuity of the breaker trip circuit from dc bus through the trip coil is monitored by the relay and reported via communications.
7. Correct operation of the on-off carrier channel is also critical to security of the Protection System, so each carrier set has a connected or integrated automatic checkback test unit. The automatic checkback test runs several times a day. Newer carrier sets with integrated checkback testing check for received signal level and report abnormal channel attenuation or noise, even if the problem is not severe enough to completely disable the channel.

These monitoring activities plus the check-back test comprise automatic verification of all the Protection System elements that experience tells us are the most prone to fail. But, does this comprise a complete verification?

Figure A-2

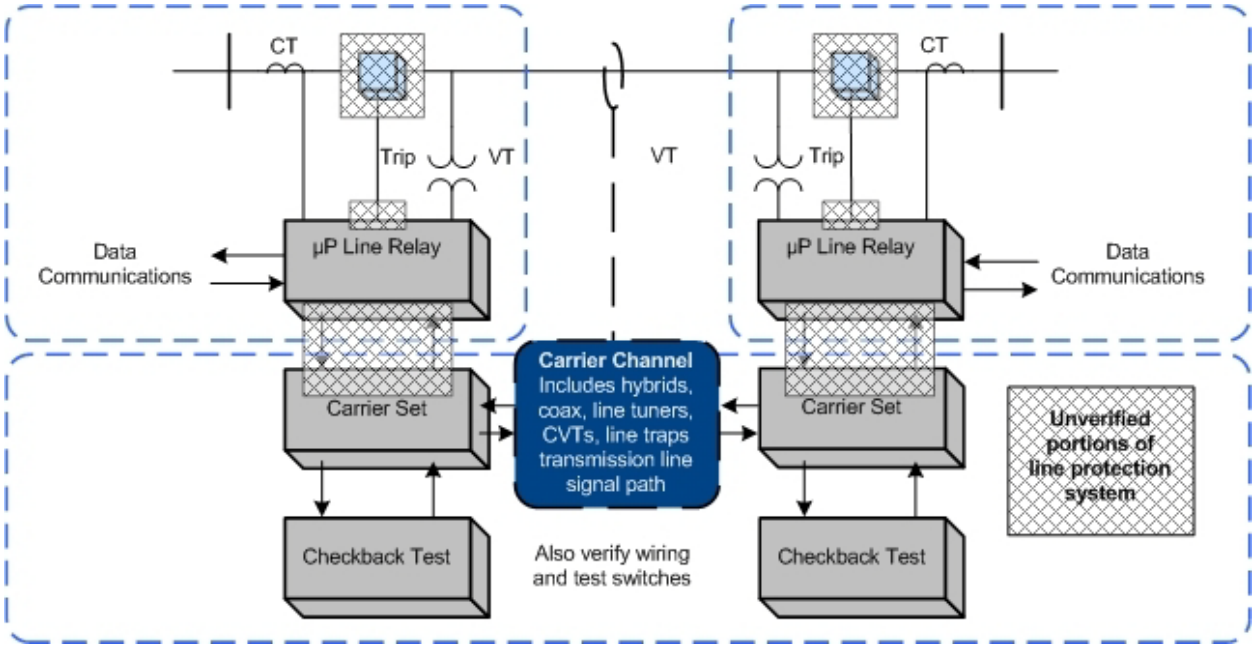

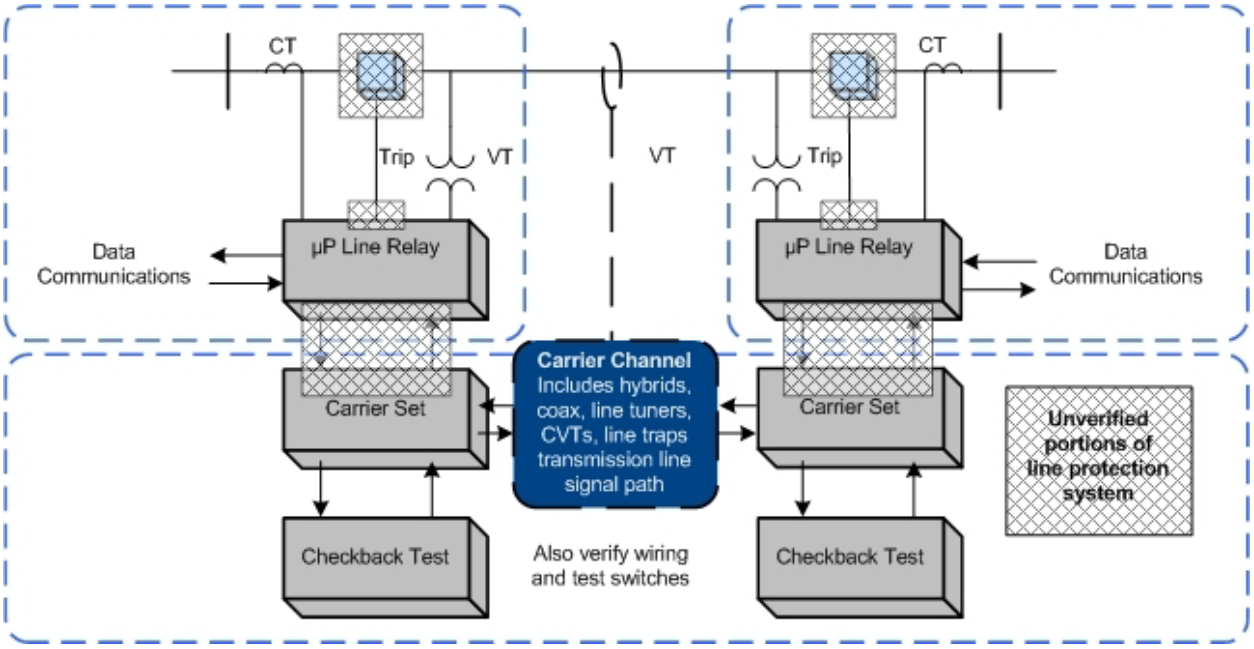

The dotted boxes of Figure A-2 show the sections of verification defined by the monitoring and verification practices just listed. These sections are not completely overlapping, and the shaded regions show elements that are not verified:

1. The continuity of trip coils is verified, but no means is provided for validating the ability of the circuit breaker to trip if the trip coil should be energized.
2. Within each line relay, all the microprocessors that participate in the trip decision have been verified by internal monitoring. However, the trip circuit is actually energized by the contacts of a small telephone-type "ice cube" relay within the line protective relay. The microprocessor energizes the coil of this ice cube relay through its output data port and a transistor driver circuit. There is no monitoring of the output port, driver circuit, ice cube relay, or contacts of that relay. These components are critical for tripping the circuit breaker for a fault.
3. The check-back test of the carrier channel does not verify the connections between the relaying microprocessor internal decision programs and the carrier transmitter keying circuit or the carrier receiver output state. These connections include microprocessor I/O ports, electronic driver circuits, wiring, and sometimes telephone-type auxiliary relays.
4. The correct states of breaker and disconnect switch auxiliary contacts are monitored, but this does not confirm that the state change indication is correct when the breaker or switch opens.

A practical solution for (1) and (2) is to observe actual breaker tripping, with a specified maximum time interval between trip tests. Clearing of naturally-occurring faults are demonstrations of operation that reset the time interval clock for testing of each breaker tripped in this way. If faults do not occur, manual tripping of the breaker through the relay trip output via data communications to the relay microprocessor meets the requirement for periodic testing.

PRC-005 does not address breaker maintenance, and its Protection System test requirements can be met by energizing the trip circuit in a test mode (breaker disconnected) through the relay microprocessor. This can be done via a front-panel button command to the relay logic, or application of a simulated fault with a relay test set. However, utilities have found that breakers often show problems during Protection System tests. It is recommended that Protection System verification include periodic testing of the actual tripping of connected circuit breakers.

Testing of the relay-carrier set interface in (3) requires that each relay key its transmitter, and that the other relay demonstrate reception of that blocking carrier. This can be observed from relay or DFR records during naturally occurring faults, or by a manual test. If the checkback test sequence were incorporated in the relay logic, the carrier sets and carrier channel are then included in the overlapping segments monitored by the two relays, and the monitoring gap is completely eliminated.

Appendix B

Appendix B — Protection System Maintenance Standard Drafting Team

Charles W. Rogers
Chairman
Consumers Energy Co.

~~John B. Anderson~~
~~Xcel Energy~~

~~Merle E. Ashton~~
~~Tri-State G&T~~

~~Bob Bentert~~
~~Florida Power & Light Company~~

~~John Ciufo~~
~~Hydro One Inc~~

~~Sam Francis~~
~~Oncor~~

~~Carol A. Gerou~~
~~Midwest Reliability Organization~~

~~William D. Shultz~~
~~Southern Company Generation~~

~~Russell C. Hardison~~
~~Tennessee Valley Authority~~

~~David Harper~~
~~NRG Texas Maintenance Services~~

~~Mark Lucas~~
~~ComEd~~

~~Al McMeekin~~
~~*NERC Staff*~~
~~North American Electric Reliability Corporation~~

~~Mark Peterson~~
~~Great River Energy~~

~~Leonard Swanson, Jr~~
~~National Grid USA~~

~~Eric A. Udren~~
~~Quanta Technology~~

~~Philip B. Winston~~
~~Southern Company Transmission~~

~~John A. Zipp~~
~~ITC Holdings~~

John B. Anderson
Xcel Energy

Merle Ashton
Tri-State G&T

Bob Bentert
Florida Power & Light Company

Forrest Brock
Western Farmers Electric Cooperative

Aaron Feathers
Pacific Gas and Electric Company

Sam Francis
Oncor Electric Delivery

Carol Gerou
Midwest Reliability Organization

Russell C. Hardison
Tennessee Valley Authority

David Harper
NRG Texas Maintenance Services

James M. Kinney
FirstEnergy Corporation

Mark Lucas
ComEd

Kristina Marriott
ENOSERV

Al McMeekin
NERC

Michael Palusso
Southern California Edison

Mark Peterson
Great River Energy

John Schecter
American Electric Power

William D. Shultz
Southern Company Generation

Eric A. Udren
Quanta Technology

Scott Vaughan
City of Roseville Electric Department

Matthew Westrich
American Transmission Company

Philip B. Winston
Southern Company Transmission

David Youngblood
Luminant Power

John A. Zipp
ITC Holdings

Technical Justification

PRC-005-2 Protection System Maintenance

The purpose of the proposed PRC-005-2 Reliability Standard is to document and implement programs for the maintenance of all Protection Systems affecting the reliability of the Bulk Electric System (BES) so that these Protection Systems are kept in working order. The proposed Reliability Standard further combines the legacy Reliability Standards PRC-005-1, PRC-008-0, PRC-011-0, and PRC-017-0, as these legacy Reliability Standards have similar reliability goals and requirements. This purpose is consistent with NERC's goal to create and implement reliability standards that enable or support at least one of the eight, defined Reliability Principles. The requirements of the proposed PRC-005-1 Reliability Standard directly support the following Reliability Principles:

> Reliability Principle 1 – Interconnected bulk power systems shall be planned and operated in a coordinated manner to perform reliably under normal and abnormal conditions as defined in the NERC Standards.
>
> Reliability Principle 7 – The reliability of the interconnected bulk power systems shall be assessed, monitored, and maintained on a wide-area basis.

The existing PRC-005-1, PRC-008-0, PRC-011-0, and PRC-017-0 Reliability Standards, as assessed by the NERC System Protection and Control Task Force (SPCTF) in its report of March 8, 2007, contain several fundamental flaws within the requirements. Within this assessment, the SPCTF asserts, for all four standards, that:

> *"The listed requirements do not provide clear and sufficient guidance concerning the maintenance and testing of the Protection Systems to achieve the commonly stated purpose which is "To ensure all transmission and generation Protection Systems affecting the reliability of the Bulk Electric System (BES) are maintained and tested.""*

And further recommends that:

- *"The standards should clearly state which power system elements are being addressed."*
- *"The requirements should reflect the inherent differences between different technologies of protection systems."*
- *"The terms maintenance programs and testing programs should be clearly defined in the glossary. The terms "maintenance" and "testing" are not interchangeable, and the requirements must be clear in their application. Additional terms may also have to be added to the glossary for clarity."*
- *"The requirements of the existing standards, as stated, support time-based maintenance and testing, and should be expanded to include condition-based and performance-based maintenance and testing. The R1.2 summary of maintenance and testing procedures needs to*

have some minimum defined sub-requirements to insure that the stated intent of the standards is met to support review by the compliance monitor," and

- *The SPCTF recommends that standards PRC-005-1, PRC-008-0, PRC-011-0, and PRC-017-0 … be included in a new Standard Authorization Request for a single Protection System maintenance and testing standard.*

Relative to PRC-005-1, the Federal Energy Regulatory Commission (FERC), in Order 693 further directed in paragraph 1476:

"… the Commission directs the ERO to develop a modification to PRC–005–1 through the Reliability Standards development process that includes a requirement that maintenance and testing of a protection system must be carried out within a maximum allowable interval that is appropriate to the type of the protection system and its impact on the reliability of the Bulk-Power System. We further direct the ERO to consider FirstEnergy's and ISO–NE's suggestion to combine PRC–005–1, PRC–008–0, PRC–011–0, and PRC–017–0 into a single Reliability Standard through the Reliability Standards development process."

FERC offered, in paragraphs 1492, 1517, and 1547, similar directives regarding PRC-008-0, PRC-011-0, and PRC-017-0, respectively.

With the development of the proposed PRC-005-2 Reliability Standard, the Standard Drafting Team (SDT) for Project 2007-17 – Protection System Maintenance, has followed the observations and recommendation of the NERC SPCTF assessment of PRC-005-1, PRC-008-0, PRC-011-0, and PRC-017-0. The SDT also addressed FERC's directives from Order 693. The SDT accomplishes this by:

1. Merging the reliability objectives of the four legacy standards.
2. Establishing minimum acceptable maintenance activities and accompanying maximum allowable maintenance intervals, reflecting various technologies of the components being addressed.
3. Providing entities the flexibility to implement condition-based maintenance by adjusting the minimum acceptable maintenance activities and maximum allowable maintenance intervals to reflect condition monitoring of the various Protection System components, and
4. Providing requirements for effective implementation of a performance-based maintenance program.

The proposed PRC-005-2 Reliability Standard includes five requirements that:

1. Combines the reliability goals of developing detailed tables of minimum maintenance activities and maximum maintenance intervals for all five component types addressed within the NERC definition of Protection System. These tables include adjustments to those activities and intervals to reflect the benefits of any condition monitoring that may be present.

2. Requires, within Requirement R1, that entities using a time-based maintenance program (which includes condition-based maintenance) shall establish a Protection System Maintenance Program (PSMP) that conforms to the tables described above.
3. Establishes, within Requirement R2, the opportunity and requirements for establishment of a performance-based maintenance program for those entities that have (or wish to develop) sufficient performance observations for their Protection System components such that they may determine maintenance intervals other than those specified within the tables while maintaining the level of reliability prescribed within the Standard.
4. Requires, within Requirements R3 and R4, that entities fully implement their PSMP as determined pursuant to Requirement R1 for time-based maintenance programs and Requirement R2 for performance-based maintenance programs, respectively.
5. Further requires, within Requirement R5, that entities initiate resolution of any issues discovered during maintenance that cause the entities to be unable to return the associated components to good working order. The SDT elected to not require that entities complete the resolution of these issues, as the time required to effectively resolve the problems may vary widely depending on the scope of that resolution.

The proposed PRC-005-2 Reliability Standard provides a comprehensive set of requirements and associated information (within the tables) that define a strong PSMP. Entities that monitor the actual condition of their Protection System components are further empowered to utilize the monitoring to improve the efficiency and effectiveness of their PSMP, and those entities that have extensive performance data regarding their Protection System components to utilize that performance data to further improve the efficiency and effectiveness of their PSMP.

Requirement R1:

R1. Each Transmission Owner, Generator Owner, and Distribution Provider shall establish a Protection System Maintenance Program (PSMP) for its Protection Systems identified in Section 4.2. *[Violation Risk Factor: Medium] [Time Horizon: Operations Planning]*

The PSMP shall:

1.1. *Identify which maintenance method (time-based, performance-based (per PRC-005 Attachment A), or a combination) is used to address each Protection System component type. All batteries associated with the station dc supply component type of a Protection System shall be included in a time-based program as described in Table 1-4 and Table 3.*

1.2. *Include the applicable monitoring attributes applied to each Protection System component type consistent with the maintenance intervals specified in Tables 1-1 through 1-5, Table 2, and Table 3 where monitoring is used to extend the maintenance intervals beyond those specified for unmonitored Protection System components.*

Background and Rationale

Establishment of a Protection System Maintenance Program as directed by Requirement R1 is needed to detect and correct plausible age- and service-related degradation of Protection System components. To ensure reliability of the Bulk Electric System, it is important that a Protection System continue to function as designed over its service life.

Requirement R1 establishes that entities develop a comprehensive maintenance program for Protection System components addressing the elements specified in the Protection System Maintenance Program definition:

Protection System Maintenance Program (PSMP) — An ongoing program by which Protection System components are kept in working order and proper operation of malfunctioning components is restored. A maintenance program for a specific component includes one or more of the following activities:

- Verify — Determine that the component is functioning correctly.
- Monitor — Observe the routine in-service operation of the component.
- Test — Apply signals to a component to observe functional performance or output behavior, or to diagnose problems.
- Inspect — Detect visible signs of component failure, reduced performance and degradation.
- Calibrate — Adjust the operating threshold or measurement accuracy of a measuring element to meet the intended performance requirement.

Maintenance and testing programs often incorporate the following types of maintenance practices:

- TBM – time-based maintenance – externally prescribed maximum maintenance or testing intervals are applied for components or groups of components. The intervals may have been developed from prior experience or manufacturers' recommendations. The TBM verification interval is based on a variety of factors, including experience of the particular asset owner, collective experiences of several asset owners who are members of a country or regional council, etc. The maintenance intervals are fixed, and may range in number of months or in years.

  TBM can include review of recent power system events near the particular terminal. Operating records may verify that some portion of the Protection System has operated correctly since the last test occurred. If specific protection scheme components have demonstrated correct performance within specifications, the maintenance test time clock can be reset for those components.

- PBM – Performance-Based Maintenance - intervals are established based on analytical or historical results of TBM failure rates on a statistically significant population of similar components. Some level of TBM is generally followed. Statistical analyses accompanied by adjustments to maintenance intervals are used to justify continued use of PBM-developed extended intervals when test failures or in-service failures occur infrequently.

- CBM – condition-based maintenance – continuously or frequently reported results from non-disruptive self monitoring of components demonstrate operational status as those components remain in service. Whatever is verified by CBM does not require manual testing, but taking advantage of this requires precise technical focus on exactly what parts are included as part of the self diagnostics. While the term "Condition-Based-Maintenance" (CBM) is no longer used within the Standard itself, it is important to note that the concepts of CBM are a part of the Standard (in the form of extended time intervals through status-monitoring). These extended time intervals are only allowed (in the absence of PBM) if the condition of the device is monitored (CBM). As a consequence of the "monitored-basis-time-intervals" existing within the Standard the explanatory discussions within this Supplementary Reference concerned with CBM will remain in this reference and are discussed as CBM.

  A key feature of condition-based monitoring is that it effectively reduces the time delay between the moment of a protection failure and time the protection system owner knows about it, for the monitored segments of the protection system. In some cases, the verification is practically continuous - the time interval between verifications is minutes or seconds. Thus, technically sound, condition-based verification, meets the directives of FERC Order 693 even more effectively than the strictly time-based tests of the same system components.

  Microprocessor based Protection System components that perform continuous self-monitoring verify correct operation of most components within the device. Self-monitoring capabilities may include battery continuity, float voltages, unintentional grounds, the ac signal inputs to a

relay, analog measuring circuits, processors and memory for measurement, protection, and data communications, trip circuit monitoring, and protection or data communications signals (and many, many more measurements). For those conditions, failure of a self-monitoring routine generates an alarm and may inhibit operation to avoid false trips. When internal components, such as critical output relay contacts, are not equipped with self-monitoring, they can be manually tested. The method of testing may be local or remote, or through inherent performance of the scheme during a system event.

TBM, PBM, and CBM can be combined for individual components, or within a complete Protection System. The following diagram illustrates the relationship between various types of maintenance practices described in this section. In the Venn diagram the overlapping regions show the relationship of TBM with PBM historical information and the inherent continuous monitoring offered through CBM.

This figure shows:

- Region 1: The TBM intervals that are increased based on known reported operational condition of individual components that are monitoring themselves.
- Region 2: The TBM intervals that are adjusted up or down based on results of analysis of maintenance history of statistically significant population of similar products that have been subject to TBM.
- Region 3: Optimal TBM intervals based on regions 1 and 2.

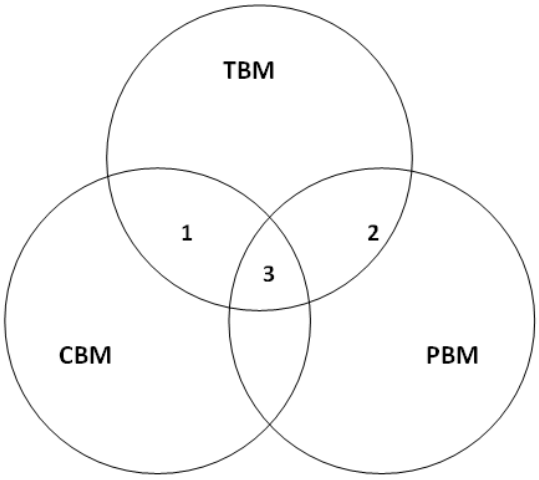

Relationship of time-based maintenance types

The PSMP shall:

R1, Part 1.1 Identify which maintenance method (time-based, performance-based (per PRC-005 Attachment A), or a combination) is used to address each Protection System component type.

R1, Part 1.1 gives entities the flexibility to choose between the various methods listed above to maintain their Protection System equipment.

All batteries associated with the station dc supply component type of a Protection System shall be included in a time-based program as described in Table 1-4 and Table 3.

Batteries are the only element of a Protection System that is a perishable item with a shelf life. As a perishable item batteries require not only a constant float charge to maintain their freshness (charge), but periodic inspection to determine if there are problems associated with their aging process and testing to see if they are maintaining a charge or can still deliver their rated output as required.

Besides being perishable, a second unique feature of a battery that is unlike any other Protection System element is that a battery uses chemicals, metal alloys, plastics, welds, and bonds that must interact with each other to produce the constant dc source required for Protection Systems, undisturbed by ac system disturbances.

No type of battery manufactured today for Protection System application is free from problems that can only be detected over time by inspection and test. These problems can arise from variances in the manufacturing process, chemicals and alloys used in the construction of the individual cells, quality of welds and bonds to connect the components, the plastics used to make batteries and the cell forming process for the individual battery cells.

Other problems that require periodic inspection and testing can result from transportation from the factory to the job site, length of time before a charge is put on the battery, the method of installation, the voltage level and duration of equalize charges, the float voltage level used, and the environment that the battery is installed in.

All of the above mentioned factors and several more not discussed here are beyond the control of the Functional Entities that want to use a performance-based Protection System Maintenance (PBM) program. These inherent variances in the aging process of a battery cell make establishment of a designated segment based on manufacturer and type of battery impossible.

R1, Part 1.2 Include the applicable monitoring attributes applied to each Protection System component type consistent with the maintenance intervals specified in Tables 1-1 through 1-5, Table 2, and Table 3 where monitoring is used to extend the maintenance intervals beyond those specified for unmonitored Protection System components.

It is necessary for entities to specify the monitoring attributes utilized in their PSMP to demonstrate the existence of the monitoring elements which permit using the extended maintenance intervals established in Tables 1-1 through 1-5, Table 2, and Table 3 of the standard.

All maintenance is fundamentally time-based. Default time-based intervals are commonly established to assure proper functioning of each component of the Protection System, when data on the reliability of the components is not available other than observations from time-based maintenance. Excessive maintenance can actually decrease the reliability of the component or system. It is not unusual to cause failure of a component by removing it from service and restoring it. The improper application of test signals may cause failure of a component. Making use of the extended intervals by employing component monitoring minimizes human performance errors. The following factors may influence the established default intervals:

- If continuous indication of the functional condition of a component is available (from relays or chargers or any self monitoring device), then the intervals may be extended or manual testing may be eliminated. This is referred to as condition-based maintenance or CBM. CBM is valid only for precisely the components subject to monitoring. In the case of microprocessor-based relays, self-monitoring may not include automated diagnostics of every component within a microprocessor.
- Previous maintenance history for a group of components of a common type may indicate that the maintenance intervals can be extended while still achieving the desired level of performance. This is referred to as Performance-Based Maintenance or PBM. It is also sometimes referred to as reliability-centered maintenance or RCM, but PBM is used in this document.
- Observed proper operation of a component may be regarded as a maintenance verification of the respective component or element in a microprocessor-based device. For such an observation, the maintenance interval may be reset only to the degree that can be verified by data available on the operation. For example, the trip of an electromechanical relay for a fault verifies the trip contact and trip path, but only through the relays in series that actually operated; one operation of this relay cannot verify correct calibration.

Requirement R2:

Overview

Requirement 2, stated below, deals with Performance Based Maintenance. The requirement refers to Attachment A. Rather than simply list Attachment A, the requirements of Attachment A are listed below with a technical justification discussion for each. The criteria within Attachment A are largely based on application of statistical analysis theory.

Requirement R2

R2. Each Transmission Owner, Generator Owner, and Distribution Provider that uses performance-based maintenance intervals in its PSMP shall follow the procedure established in PRC-005 Attachment A to establish and maintain its performance-based intervals. *[Violation Risk Factor: Medium] [Time Horizon: Operations Planning]*

Background and Rationale

Performance Based Maintenance (PBM) is included in PRC-005-2 to allow utilities to adjust maintenance intervals based on their individual experience with equipment types and manufacture. The utility must create a segment of components with similar manufacture and model characteristics of statistically significant size.

Based on equipment failure(s) and out-of-tolerance(s), called countable events, in any given year, the utility then sets its maintenance interval to keep the countable events below 4%. Performance Based Maintenance is discussed at length in Section 9.1 of the Supplemental Reference for PRC-005-2. Many of the technical justifications shown below come from of the Supplemental Reference. Each requirement of Attachment A will now be listed and individually discussed.

Segment – *Protection Systems or components of a consistent design standard, or a particular model or type from a single manufacturer that typically share other common elements. Consistent performance is expected across the entire population of a segment. A segment must contain at least sixty (60) individual components.*

Countable Event – *A component which has failed and requires repair or replacement, any condition discovered during the maintenance activities in Tables 1-1 through 1-5 and Table 3 which requires corrective action, or a Misoperation attributed to hardware failure or calibration failure. Misoperations due to product design errors, software errors, relay settings different from specified settings, Protection System component configuration errors, or Protection System application errors are not included in Countable Events.*

1. Develop a list with a description of components included in each designated segment of the Protection System component population, with a minimum **segment** population of 60 components.

   A sample size requirement can be estimated using the bound on the Error of

Distribution Formula when the expected result is of a "Pass/Fail" format and will be between 0 and 1.0.

The Error of Distribution Formula is:

$$B = z\sqrt{\frac{\pi(1-\pi)}{n}}$$

Where:

B = bound on the error of distribution (allowable error)

z = standard error

π = expected failure rate

n = sample size required

Solving for n provides:

$$n = \pi(1-\pi)\left(\frac{z}{B}\right)^2$$

One entity's population of components should be large enough to represent a sizeable sample of a vendor's overall population of manufactured devices. For this reason the following assumptions are made:
B = 5%
z = 1.96 (This equates to a 95% confidence level)
π = 4% (see number 5 below)
Using the equation above, n=59.0. The Standard Drafting Team chose to use the round number of 60 for the requirement.

2. Maintain the components in each segment according to the time-based maximum allowable intervals established in Tables 1-1 through 1-5 and Table 3 until results of maintenance activities for the segment are available for a minimum of 30 individual components of the segment.

   An assumption that needs to be made when choosing a sample size is "the sampling distribution of the sample mean can be approximated by a normal probability distribution." The Central Limit Theorem states: "In selecting simple random samples of size *n* from a population, the sampling distribution of the sample mean *x* can be approximated by a normal probability distribution as the sample size becomes large." (Essentials of Statistics for Business and Economics, Anderson, Sweeney, Williams, 2003)

To use the Central Limit Theorem in statistics, the population size should be large. The references below are supplied to help define what is large.

> "… whenever we are using a large simple random sample (rule of thumb: n>=30), the central limit theorem enables us to conclude that the sampling distribution of the sample mean can be approximated by a normal distribution." (Essentials of Statistics for Business and Economics, Anderson, Sweeney, Williams, 2003)
>
> "If samples of size n, when n>=30, are drawn from any population with a mean *u* and a standard deviation σ, the sampling distribution of sample means approximates a normal distribution. The greater the sample size, the better the approximation." (Elementary Statistics - Picturing the World, Larson, Farber, 2003)
>
> "The sample size is large (generally n>=30)… (Introduction to Statistics and Data Analysis - Second Edition, Peck, Olson, Devore, 2005)
>
> "… the normal is often used as an approximation to the *t* distribution in a test of a null hypothesis about the mean of a normally distributed population when the population variance is estimated from a relatively large sample. A sample size exceeding 30 is often given as a minimal size in this connection." (Statistical Analysis for Business Decisions, Peters, Summers, 1968)

3. Document the maintenance program activities and results for each segment, including maintenance dates and countable events for each included component.

   This requirement needs little justification. To analyze system performance, the activities and results must be documented.

4. Analyze the maintenance program activities and results for each segment to determine the overall performance of the segment and develop maintenance intervals.

   This requirement states the obvious for a program that is based on the performance results of the segment.

5. Determine the maximum allowable maintenance interval for each segment such that the segment experiences **countable events** on no more than 4% of the components within the segment, for the greater of either the last 30 components maintained or all components maintained in the previous year.

The Performance Based Maintenance (PBM) program ensures no more than a 4% failure rate for each segment of a component type. The 4% number was developed using the following:

- General experience of the Standard Drafting Team (SDT) based on open discussions of past performance.
- Test results provided by Consumers Energy for the years 1998-2008 showing a yearly average of 7.5% out-of-tolerance relay test results and a yearly average of 1.5% defective rate.
- Two failure analysis reports from Tennessee Valley Authority (TVA) where TVA identified problematic equipment based on a noticeably higher failure of a certain relay type (failure rate of 2.5%) and voltage transformer type (failure rate of 3.6%).

In addition to the number "30" discussion from number 2 above, the Error of Distribution formula discussed in number 1 above allows the number of components that should be included in a sample size for evaluation of the appropriate testing interval to be smaller because a lower confidence level is acceptable since the sample testing is repeated or updated annually. For this reason, the following assumptions are made:
B = 5%
z = 1.44 (85% confidence level)
π = 4%
Using the equation above, n=31.8. The Standard Drafting Team chose to use the round number of 30.

6. At least annually, update the list of Protection System components and segments and/or description if any changes occur within the segment.

   Annually was chosen as a reasonable time frame to update component segments due to component installation, replacement, and retirement.

7. Perform maintenance on the greater of 5% of the components (addressed in the performance based PSMP) in each segment or 3 individual components within the segment in each year.

   Note: this 5% threshold sets a practical limitation on total length of time between intervals at 20 years.

   This requirement ensures that a utility keeps a flow of recent data to use in its annual analysis. The Standard Drafting Team felt that 20 years was the maximum time that should be allowed before a component should be checked or maintained. The minimum number of three allows for the same 20 years interval based on the minimum segment population of 60 (60/3=20).
8. For the prior year, analyze the maintenance program activities and results for each segment to determine the overall performance of the segment.

Annually was chosen as a reasonable time frame to allow for collection of new data to update the program's performance analysis.

9. Using the prior year's data, determine the maximum allowable maintenance interval for each segment such that the segment experiences countable events on no more than 4% of the components within the segment, for the greater of either the last 30 components maintained or all components maintained in the previous year.

   Refer to number 5 above.

10. If the components in a Protection System segment maintained through a performance-based PSMP experience 4% or more countable events, develop, document, and implement an action plan to reduce the countable events to less than 4% of the segment population within 3 years.

    The 4% number is discussed in number 5 above. Three years was chosen by the Standard Drafting Team because it allows time to modify the program and for the effects of a modified program to be observed.

Requirement R3:

R3. Each Transmission Owner, Generator Owner, and Distribution Provider that utilizes time-based maintenance programs shall maintain its Protection System components that are included within the time-based maintenance program in accordance with the minimum maintenance activities and maximum maintenance intervals prescribed within Tables 1-1 through 1-5, Table 2, and Table 3. *[Violation Risk Factor: High] [Time Horizon: Operations Planning]*

Background and Rationale

NERC Reliability Principle 1 establishes that "Interconnected bulk power systems shall be planned and operated in a coordinated manner to perform reliably under normal and abnormal conditions as defined in the NERC Standards."

NERC Reliability Principle 7 establishes that "The reliability of the interconnected bulk power systems shall be assessed, monitored, and maintained on a wide-area basis."

The proper performance of Protection Systems is fundamental to the reliability of the Bulk Electric System (BES) as embodied in Reliability Principles 1 and 7, and proper performance of Protection Systems cannot be assured without periodic maintenance of those systems.

Therefore, Requirement R3 requires the implementation of the minimum maintenance activities and maximum allowable maintenance intervals as elucidated in Requirement R1 and the tables within the standard.

Requirement R4:

R4. Each Transmission Owner, Generator Owner, and Distribution Provider that utilizes performance-based maintenance programs in accordance with Requirement R2 shall implement and follow its PSMP for its Protection System components that are included within the performance-based program. *[Violation Risk Factor: High] [Time Horizon: Operations Planning]*

Background and Rationale

NERC Reliability Principle 1 establishes that "Interconnected bulk power systems shall be planned and operated in a coordinated manner to perform reliably under normal and abnormal conditions as defined in the NERC Standards."

NERC Reliability Principle 7 establishes that "The reliability of the interconnected bulk power systems shall be assessed, monitored, and maintained on a wide-area basis."

The proper performance of Protection Systems is fundamental to the reliability of the Bulk Electric System (BES) as embodied in Reliability Principles 1 and 7, and proper performance of Protection Systems cannot be assured without periodic maintenance of those systems.

Therefore, Requirement R4 requires the implementation of an entity's Protection System Maintenance Program established pursuant to Requirement R2.

Requirement R5:

R5. Each Transmission Owner, Generator Owner, and Distribution Provider shall demonstrate efforts to correct identified Unresolved Maintenance Issues. *[Violation Risk Factor: Medium] [Time Horizon: Operations Planning]*

Unresolved Maintenance Issue *- A deficiency identified during a maintenance activity that causes the component to not meet the intended performance and requires follow-up corrective action.*

Background and Rationale

The reliability objective of this requirement is to assure that Protection System components are returned to working order following the discovery of failures or malfunctions during scheduled maintenance. The maintenance activities specified in the Tables 1-1 through 1-5, Table 2, and Table 3 do not present any requirements related to restoration; therefore Requirement R5 of the Standard was developed to require the entity to "demonstrate efforts to correct identified unresolved maintenance issues".

The SDT does not believe entities should be found in violation of a maintenance program requirement because of the inability to complete a remediation program within the original maintenance interval. The SDT does believe corrective actions should be timely but concludes it would be impossible to postulate all possible remediation projects and therefore, impossible to specify bounding time frames for resolution of all possible unresolved maintenance issues or what documentation might be sufficient to provide proof that effective corrective action has been initiated. Therefore Requirement R5 requires only the entity demonstrate efforts to correct the unresolved maintenance issues.

Management of completion of the identified unresolved maintenance issue is a complex topic that falls outside of the scope of this standard. There can be any number of supply, process and management problems that make setting repair deadlines impossible. The SDT specifically chose to require the entity to "demonstrate efforts to correct …" because of the concern that many more complex unresolved maintenance issues might require greater than the remaining maintenance interval to resolve. For example, a problem might be identified on a VRLA battery during a 6 month check. In instances such as one that requiring battery replacement as part of the long term resolution, it is highly unlikely that the battery could be replaced in time to meet the 6 calendar month requirement for this maintenance activity.

During the period of time that the Protection System is operating in a degraded mode, NERC Standard PRC-001-1 requires that operating entities be informed of any Protection System failures that reduce reliability, and several NERC IRO-series and TOP-series standards require that operating entities operate the system in a manner that assures reliability while recognizing any system degradation.

NERC
NORTH AMERICAN ELECTRIC RELIABILITY CORPORATION

Project 2007-17 Protection System Maintenance and Testing Mapping Document

Mapping Document Showing Translation of PRC-005-1a – Transmission and Generation Protection System Maintenance and Testing, PRC-008-0- Implementation and Documentation of Underfrequency Load Shedding Equipment Maintenance Program, PRC-011-0 - Undervoltage Load Shedding System Maintenance and Testing, and PRC-017-0 - Special Protection System Maintenance and Testing into PRC-005-2 – Protection System Maintenance.

Standard: PRC-005-1 - Transmission and Generation Protection System Maintenance and Testing		
Requirement in Approved Standard	**Translation to New Standard or Other Action**	**Proposed Language in PRC-005-2 – Protection System Maintenance Or Comment**
R1. Each Transmission Owner and any Distribution Provider that owns a transmission Protection System and each Generator Owner that owns a generation Protection System shall have a Protection System maintenance and testing program for Protection Systems that affect the reliability of the BES. The program shall include: R1.1. Maintenance and testing intervals and their basis. R1.2. Summary of maintenance and testing procedures.	PRC-005-2, R1 and PRC-005-2, R2 PRC-005-2, Tables 1-1 through 1-5, Table 2, and Table 3.	R1. Each Transmission Owner, Generator Owner, and Distribution Provider shall establish a Protection System Maintenance Program (PSMP) for its Protection Systems identified in Section 4.2. The PSMP shall: 1.1. Identify which maintenance method (time-based, performance-based (per PRC-005 Attachment A), or a combination) is used to address each Protection System component type. All batteries associated with the station dc supply component type of a Protection System shall be included in a time-based program as described in Table 1-4 and Table 3. 1.2. Include the applicable monitoring attributes applied to each Protection System component type consistent with the maintenance intervals specified in Tables 1-1 through 1-5, Table 2, and Table 3 where monitoring is used to extend the maintenance intervals beyond those specified for

Standard: PRC-005-1 - Transmission and Generation Protection System Maintenance and Testing		
Requirement in Approved Standard	**Translation to New Standard or Other Action**	**Proposed Language in PRC-005-2 – Protection System Maintenance Or Comment**
		unmonitored Protection System components. R2. Each Transmission Owner, Generator Owner, and Distribution Provider that uses performance-based maintenance intervals in its PSMP shall follow the procedure established in PRC-005 Attachment A to establish and maintain its performance-based intervals. See PRC-005-2 Tables 1-1 through 1-5, Table 2, and Table 3. The Tables establish prescribed maximum intervals and minimum maintenance activities, and, as such, the entity no longer needs to establish the basis for their intervals.
R2. Each Transmission Owner and any Distribution Provider that owns a transmission Protection System and each Generator Owner that owns a generation Protection System shall provide documentation of its Protection System maintenance and testing program and the implementation of that program to its Regional Reliability Organization on request (within 30 calendar days). The documentation of the program implementation shall include: R2.1. Evidence Protection System devices were maintained and tested within	PRC-005-2, R3 PRC-005-2, R4, PRC-005-2, M3, PRC-005-2, M4 NERC Compliance Monitoring Enforcement Program Data Retention 1.3	R3. Each Transmission Owner, Generator Owner, and Distribution Provider that utilizes time-based maintenance programs shall maintain its Protection System components that are included within the time-based maintenance program in accordance with the minimum maintenance activities and maximum maintenance intervals prescribed within Tables 1-1 through 1-5, Table 2, and Table 3. R4. Each Transmission Owner, Generator Owner, and Distribution Provider that utilizes performance-based maintenance programs in accordance with Requirement R2 shall implement and follow its PSMP for its Protection System components that are included within the performance-based program. The legacy requirement that the entity provide the program results to the RRO and NERC on

Standard: PRC-005-1 - Transmission and Generation Protection System Maintenance and Testing		
Requirement in Approved Standard	**Translation to New Standard or Other Action**	**Proposed Language in PRC-005-2 – Protection System Maintenance Or Comment**
the defined intervals. R2.2. Date each Protection System device was last tested/maintained.		request is addressed in the NERC Compliance Monitoring Enforcement Program. M3. Each Transmission Owner, Generator Owner, and Distribution Provider that utilizes time-based maintenance programs shall have evidence that it has maintained its Protection System components included within its time-based program in accordance with Requirement R3. The evidence may include but is not limited to dated maintenance records, dated maintenance summaries, dated check-off lists, dated inspection records, or dated work orders. M4. Each Transmission Owner, Generator Owner, and Distribution Provider that utilizes a performance-based maintenance program in accordance with Requirement R2 shall have evidence that it has implemented the Protection System Maintenance Program for the Protection System components included in its performance-based program in accordance with Requirement R4. The evidence may include but is not limited to dated maintenance records, dated maintenance summaries, dated check-off lists, dated inspection records, or dated work orders. 1.3 Data Retention For Requirement R2, Requirement R3, Requirement R4, and Requirement R5, the Transmission Owner, Generator Owner, and Distribution Provider shall each keep documentation of the two most recent

Standard: PRC-005-1 - Transmission and Generation Protection System Maintenance and Testing		
Requirement in Approved Standard	**Translation to New Standard or Other Action**	**Proposed Language in PRC-005-2 – Protection System Maintenance Or Comment**
		performances of each distinct maintenance activity for the Protection System components, or all performances of each distinct maintenance activity for the Protection System component since the previous scheduled audit date, whichever is longer.

Standard: PRC-008-0 - Implementation and Documentation of Underfrequency Load Shedding Equipment Maintenance Program		
Requirement in Approved Standard	**Translation to New Standard or Other Action**	**Comments**
R1. The Transmission Owner and Distribution Provider with a UFLS program (as required by its Regional Reliability Organization) shall have a UFLS equipment maintenance and testing program in place. This UFLS equipment maintenance and testing program shall include UFLS equipment identification, the schedule for UFLS equipment testing, and the schedule for UFLS equipment maintenance.	PRC-005-2, R1, R2, R3, R4, and Applicability 4.2.2 Tables 1-1 – 1-5, Table 2, and Table 3	See mapping of Requirements R1 and R2 for PRC-005-1 above. 4.2 Facilities 4.2.2 Protection Systems used for underfrequency load-shedding systems installed per ERO underfrequency load-shedding requirements. See PRC-005-2 Tables 1-1 through 1-5, Table 2, and Table 3. The Tables establish prescribed maximum intervals and minimum maintenance activities, and, as such, the entity no longer needs to establish the basis for their intervals.
R2. The Transmission Owner and Distribution Provider with a UFLS program (as required by its Regional Reliability Organization) shall implement its UFLS equipment maintenance and testing program and shall provide UFLS maintenance and testing program results to its Regional Reliability Organization and NERC on request (within 30 calendar days).	PRC-005-2, R3, PRC-002, R4 PRC-005-2, M3, and PRC-005-2 M4 NERC Compliance Monitoring Enforcement Program	See mapping of Requirements R1 and R2 for PRC-005-1 above. The legacy requirement that the entity provide the program results to the RRO and NERC on request is addressed in the NERC Compliance Monitoring Enforcement Program.

Standard: PRC-011-0 - Undervoltage Load Shedding System Maintenance and Testing

Requirement in Approved Standard	Translation to New Standard or Other Action	Comments
R1. The Transmission Owner and Distribution Provider that owns a UVLS system shall have a UVLS equipment maintenance and testing program in place. This program shall include: **R1.1.** The UVLS system identification which shall include but is not limited to: **R1.1.1.** Relays. **R1.1.2.** Instrument transformers. **R1.1.3.** Communications systems, where appropriate. **R1.1.4.** Batteries. **R1.2.** Documentation of maintenance and testing intervals and their basis. **R1.3.** Summary of testing procedure. **R1.4.** Schedule for system testing. **R1.5.** Schedule for system maintenance. **R1.6.** Date last tested/maintained.	PRC-005-2, R1, PRC-005-2, R2, PRC-005-2, R3, PRC-005-2, R4, PRC-005-2 M3, PRC-005-2, M4, and PRC-005-2 Applicability 4.2.3 Tables 1-1 – 1-5, Table 2, and Table 3 Data Retention 1.3	See mapping of Requirements R1, and R2 for PRC-005-1 above. 4.2 Facilities 4.2.3 Protection Systems used for undervoltage load-shedding systems installed to prevent system voltage collapse or voltage instability for BES reliability. See PRC-005-2 Tables 1-1 through 1-5, Table 2, and Table 3. The Tables establish prescribed maximum intervals and minimum maintenance activities, and, as such, the entity no longer needs to establish the basis for their intervals. 1.3 Data Retention For Requirement R2, Requirement R3, Requirement R4, and Requirement R5, the Transmission Owner, Generator Owner, and Distribution Provider shall each keep documentation of the two most recent performances of each distinct maintenance activity for the Protection System components, or all performances of each distinct maintenance activity for the Protection System component since the previous scheduled audit date, whichever is longer.
R2. The Transmission Owner and Distribution Provider that owns a UVLS system shall provide documentation of its UVLS equipment maintenance	NERC Compliance Monitoring Enforcement Program	The legacy requirement that the entity provide the program results to the RRO and NERC on request is addressed in the NERC Compliance Monitoring Enforcement Program

Standard: PRC-011-0 - Undervoltage Load Shedding System Maintenance and Testing		
Requirement in Approved Standard	**Translation to New Standard or Other Action**	**Comments**
and testing program and the implementation of that UVLS equipment maintenance and testing program to its Regional Reliability Organization and NERC on request (within 30 calendar days).		

Standard: PRC-017-0 - Special Protection System Maintenance and Testing		
Requirement in Approved Standard	**Translation to New Standard or Other Action**	**Comments**
R1. The Transmission Owner, Generator Owner, and Distribution Provider that owns an SPS shall have a system maintenance and testing program(s) in place. The program(s) shall include: **R1.1.** SPS identification shall include but is not limited to: **R1.1.1.** Relays. **R1.1.2.** Instrument transformers. **R1.1.3.** Communications systems, where appropriate. **R1.1.4.** Batteries. **R1.2.** Documentation of maintenance and testing intervals and their basis. **R1.3.** Summary of testing procedure. **R1.4.** Schedule for system testing. **R1.5.** Schedule for system maintenance. **R1.6.** Date last tested/maintained.	PRC-005-2, R1, PRC-005-2, R2, PRC-005-2, R3, PRC-005-2, R4, PRC-005-2 M3, PRC-005-2, M4, and PRC-005-2 Applicability 4.2.4 Tables 1-1 – 1-5, and Table 2 Data Retention 1.3	See mapping of Requirements R1, and R2 for PRC-005-1 above. 4.2 Facilities 4.2.4 Protection Systems installed as a Special Protection System (SPS) for BES reliability. See PRC-005-2 Tables 1-1 through 1-5 and Table 2. The Tables establish prescribed maximum intervals and minimum maintenance activities, and, as such, the entity no longer needs to establish the basis for their intervals. 1.3 Data Retention For Requirement R2, Requirement R3, Requirement R4, and Requirement R5, the Transmission Owner, Generator Owner, and Distribution Provider shall each keep documentation of the two most recent performances of each distinct maintenance activity for the Protection System components, or all performances of each distinct maintenance activity for the Protection System component since the previous scheduled audit date, whichever is longer.
R2. The Transmission Owner, Generator Owner, and Distribution Provider that owns an SPS shall provide	NERC Compliance Monitoring Enforcement Program	The legacy requirement that the entity provide the program results to the RRO and NERC on request is addressed in the NERC Compliance Monitoring Enforcement Program

documentation of the program and its implementation to the appropriate Regional Reliability Organizations and NERC on request (within 30 calendar days).		

Table of Issues and Directives

Project 2007-17 Protection System Maintenance and Testing

Table of Issues and Directives Associated with PRC-005-2			
Source	**Directive Language (including pg #)**	**Disposition**	**Section and/or Requirement(s)**
FERC Order 693	1475. In addition, for the reasons discussed in the NOPR, the Commission directs the ERO to develop a modification to PRC-005-1 through the Reliability Standards development process that includes a requirement that maintenance and testing of a protection system must be carried out within a maximum allowable interval that is appropriate to the type of the protection system and its impact on the reliability of the Bulk-Power System.	Specific maximum allowable intervals are included in the draft standard within Tables 1-1 through 1-5, and Table 2 for time-based programs. Also adding a requirement allowing performance-based maintenance intervals.	Requirement R3, Requirement R4, Tables 1-1 through 1-5, and Table 2, Attachment A
FERC Order 693	1475. We further direct the ERO to consider FirstEnergy's and ISO-NE's suggestion to combine PRC-005-1, PRC-008-0, PRC-011-0 and PRC-017-0 into a single Reliability Standard through the Reliability Standards development process.	These suggestions were adopted. The SDT is combining the four legacy standards into one.	NA

Table of Issues and Directives Associated with PRC-005-2			
Source	**Directive Language (including pg #)**	**Disposition**	**Section and/or Requirement(s)**
FERC Order 693	1492. In addition, the Commission directs the ERO to develop a modification to PRC-008-0 through the Reliability Standards development process that includes a requirement that maintenance and testing of a protection system must be carried out within a maximum allowable interval that is appropriate to the type of the protection system and its impact on the reliability of the Bulk-Power System.	Specific maximum allowable intervals are included in the draft standard within Tables 1-1 through 1-5, and Table 3 for time-based programs. Also adding a requirement allowing performance-based maintenance intervals.	Applicability 4.2.2, Requirement R3, Requirement R4, Tables 1-1 through 1-5, and Table3.
FERC Order 693	1516. The Commission believes that the proposal is presently part of the process. The Commission approves Reliability Standard PRC-011-0 as mandatory and enforceable. In addition, the Commission directs the ERO to submit a modification to PRC-011-0 through the Reliability Standards development process that includes a requirement that maintenance and testing of a protection system must be carried out within a maximum allowable interval that is appropriate to the type of the protection system and its impact on the reliability of the Bulk-Power System.	Specific maximum allowable intervals are included in the draft standard within Tables 1-1 through 1-5, Table 2, and Table 3 for time-based programs. Also adding a requirement allowing performance-based maintenance intervals.	Applicability 4.2.3, Requirement R3, Requirement R4, Tables 1-1 through 1-5, Table 2, and Table 3.

Table of Issues and Directives Associated with PRC-005-2			
Source	**Directive Language (including pg #)**	**Disposition**	**Section and/or Requirement(s)**
FERC Order 693	1546. The Commission approves Reliability Standard PRC-017-0 as mandatory and enforceable. In addition, the Commission directs the ERO to develop a modification to PRC-017-0 through the Reliability Standards development process that includes: (1) a requirement that maintenance and testing of a protection system must be carried out within a maximum allowable interval that is appropriate for the type of the protection system...	Specific maximum allowable intervals are included in the draft standard within Tables 1-1 through 1-5, and Table 2 for time-based programs. Also adding a requirement allowing performance-based maintenance intervals.	Applicability 4.2.4, Requirement R3, Requirement R4, Tables 1-1 through 1-5, and Table 2
FERC Order 693	1546. In addition, the Commission directs the ERO to develop a modification to PRC-017-0 through the Reliability Standards development process, that includes: ...(2) a requirement that documentation identified in Requirement R2 shall be routinely provided to the ERO or Regional Entity.	Transferred within Issues Database to Project 2010-05 that will address PRC-012-0 and other SPS standards. The directive is referencing documentation of the actual SPSs – primarily their design and implementation.	NA
Version 0 Team	Not a stand-alone standard	The SDT is combining the four legacy standards into one.	NA

Table of Issues and Directives Associated with PRC-005-2			
Source	**Directive Language (including pg #)**	**Disposition**	**Section and/or Requirement(s)**
Version 0 Team	Include breakers/switches in list	Breakers/switches are specifically NOT included in the Protection System definition, and therefore are NOT addressed in the draft standard.	NA
Version 0 Team	Define evidence	Requirement R3 states that the program must be implemented. Evidence that the program is implemented is included in the Measure M3.	M1, M2, M3, M4, and M5 all contain examples of evidence
Version 0 Team	Definition of evidence required	Requirement R3 states that the program must be implemented. Evidence that the program is implemented is included in the Measure M3.	M1, M2, M3, M4, and M5 all contain examples of evidence
Version 0 Team	Consistent wording from standard to standard required	The SDT is combining the four legacy standards into one.	NA

Table of Issues and Directives Associated with PRC-005-2			
Source	**Directive Language (including pg #)**	**Disposition**	**Section and/or Requirement(s)**
Version 0 Team	Exemptions for those with shunt reactors	UV Relays on shunt reactors is not UVLS; these relays would be included as pertinent to relays "applied on or to protect the BES".	NA
Version 0 Team	Define evidence	Requirement R3 states that the program must be implemented. Evidence that the program is implemented is included in the Measure M3.	M1, M2, M3, M4, and M5 all contain examples of evidence
Version 0 Team	Need to retain two dates	The Standard requires that data be retained for the last two maintenance intervals or to the last audit, whichever is longer.	See data retention clause
Version 0 Team	Define evidence	Requirement R3 states that the program must be implemented. Evidence that the program is implemented is included in the Measure M3.	M1, M2, M3, M4, and M5 all contain examples of evidence

Table of Issues and Directives Associated with PRC-005-2			
Source	**Directive Language (including pg #)**	**Disposition**	**Section and/or Requirement(s)**
NERC Audit Observation Team	How do you verify compliance for cts/pts? How do you audit these within a scheduled maintenance program? As part of the procedure, most have accepted visual inspection. Some entities state that testing of the relays verify functionality of the ct/pt.	Verification activities in Table 1-3 establish the activities required for the voltage and current sensing inputs to protective relays and associated circuitry from the voltage and current sensing devices.	Specific activities for current and voltage transformers have been defined within Table 1-3
NERC Audit Observation Team	How do you verify DC control power? All regions require functional testing of the breaker. This should include functional relay & station battery checks, including breaker tripping, not just a visual inspection.	Specific verification activities are established in Table 1-4.	Specific activities for maintenance of dc control circuitry have been defined within Table 1-4. These activities include periodic verification of proper functioning of the dc control circuitry.
NERC Audit Observation Team	Determine what on schedule means. Is an entity who maintained/tested 95% of their relays at the same level of non-compliance as an entity who maintained/tested 10% of their relays?	The VSL for maintenance program implementation (Requirement R3) establishes different VSLs depending on the degree to which the program is implemented.	The VSLs for Requirement R3, Requirement R4 have been “phased” such that an entity that

Table of Issues and Directives Associated with PRC-005-2			
Source	**Directive Language (including pg #)**	**Disposition**	**Section and/or Requirement(s)**
			"misses" only a few required activities will be at a lower VSL than entities that "miss" many such activities.
NERC Audit Observation Team	As applicable, each TO, DP and GOP shall have a protection system maintenance and testing program for protection systems that affect the reliability of the BES. Does this include major equipment like circuit breakers and transformers?	Maintenance of **Protection Systems** on all BES equipment is included within this standard. Circuit breakers and power transformers are not included in the definition of Protection System; instrument transformers are included within the definition.	See definition of Protection System.
Fill in the Blank Team	Okay if PRC-006 is fixed	Applicability section of PRC-005-2 (4.2.2) establishes applicability to UFLS established in accordance with ERO requirements.	Applicability 4.2.2, Requirement R3, Requirement R4, Tables 1-1 through 1-5, and Table 3

Table of Issues and Directives Associated with PRC-005-2			
Source	**Directive Language (including pg #)**	**Disposition**	**Section and/or Requirement(s)**
Phase III/IV Team	All protection systems on the bulk electric system.	The Applicability section of the standard defines the facilities to which the standard applies.	Applicability
Phase III/IV Team	PRC 003 to 005 only address generator (and transmission) protective systems, without defining this term.	The applicability section addresses Protection Systems designed to provide protection for BES Element(s), and provides additional specificity regarding applicable generator Protection Systems.	Applicability
Phase III/IV Team	Need to add language to ensure the Regional Requirements focus on the most impactive scenarios	The draft standard establishes minimum ERO-wide requirements; any Regional requirements would have to exceed the ERO requirements.	NA
Phase III/IV Team	Modify applicability to clarify that the requirements are applicable to the following:	The applicability section has been modified.	Applicability

Table of Issues and Directives Associated with PRC-005-2			
Source	**Directive Language (including pg #)**	**Disposition**	**Section and/or Requirement(s)**
Phase III/IV Team	All generation protection systems whose misoperations impact the bulk electric system	Specificity is provided in Applicability 4.2.5 addressing maintenance of Protection Systems for generator facilities.	Applicability: 4.2.5
Phase III/IV Team	There is no performance requirement or measure of effectiveness of a maintenance program required by the standard	For Time-Based (or Condition-Based) maintenance, minimum activities and maximum intervals are specified; for performance-based maintenance, performance (or effectiveness) goals are established.	R2 and Attachment A

Project 2007-17 – PRC-005-2: Protection System Maintenance

This document provides the drafting team's justification for assignment of violation risk factors (VRFs) and violation severity levels (VSLs) for each requirement in PRC-005-2 — Protection System Maintenance.

Each primary requirement is assigned a VRF and a set of one or more VSLs. These elements support the determination of an initial value range for the Base Penalty Amount regarding violations of requirements in FERC-approved Reliability Standards, as defined in the ERO Sanction Guidelines.

The Protection System Maintenance and Testing Standard Drafting Team applied the following NERC criteria and FERC Guidelines when proposing VRFs and VSLs for the requirements under this project:

NERC Criteria - Violation Risk Factors

High Risk Requirement

A requirement that, if violated, could directly cause or contribute to bulk electric system instability, separation, or a cascading sequence of failures, or could place the bulk electric system at an unacceptable risk of instability, separation, or cascading failures; or, a requirement in a planning time frame that, if violated, could, under emergency, abnormal, or restorative conditions anticipated by the preparations, directly cause or contribute to bulk electric system instability, separation, or a cascading sequence of failures, or could place the bulk electric system at an unacceptable risk of instability, separation, or cascading failures, or could hinder restoration to a normal condition.

Medium Risk Requirement

A requirement that, if violated, could directly affect the electrical state or the capability of the bulk electric system, or the ability to effectively monitor and control the bulk electric system. However, violation of a medium risk requirement is unlikely to lead to bulk electric system instability, separation, or cascading failures; or, a requirement in a planning time frame that, if violated, could, under emergency, abnormal, or restorative conditions anticipated by the preparations, directly and adversely affect the electrical state or capability of the bulk electric system, or the ability to effectively monitor, control, or restore the bulk electric system. However, violation of a medium risk requirement is unlikely, under emergency, abnormal, or restoration conditions anticipated by the preparations, to lead to bulk electric system instability, separation, or cascading failures, nor to hinder restoration to a normal condition.

Lower Risk Requirement

A requirement that is administrative in nature and a requirement that, if violated, would not be expected to adversely affect the electrical state or capability of the bulk electric system, or the ability to effectively monitor and control the bulk electric system; or, a requirement that is administrative in nature and a requirement in a planning time frame that, if violated, would not, under the emergency, abnormal, or restorative conditions anticipated by the preparations, be expected to adversely affect the electrical state or capability of the bulk electric system, or the ability to effectively monitor, control, or restore the bulk electric system. A planning requirement that is administrative in nature.

FERC Violation Risk Factor Guidelines

Guideline (1) — Consistency with the Conclusions of the Final Blackout Report

The Commission seeks to ensure that Violation Risk Factors assigned to Requirements of Reliability Standards in these identified areas appropriately reflect their historical critical impact on the reliability of the Bulk-Power System.

In the VSL Order, FERC listed critical areas (from the Final Blackout Report) where violations could severely affect the reliability of the Bulk-Power System:

- Emergency operations
- Vegetation management

- Operator personnel training
- Protection systems and their coordination
- Operating tools and backup facilities
- Reactive power and voltage control
- System modeling and data exchange
- Communication protocol and facilities
- Requirements to determine equipment ratings
- Synchronized data recorders
- Clearer criteria for operationally critical facilities
- Appropriate use of transmission loading relief

Guideline (2) — Consistency within a Reliability Standard

The Commission expects a rational connection between the sub-Requirement Violation Risk Factor assignments and the main Requirement Violation Risk Factor assignment.

Guideline (3) — Consistency among Reliability Standards

The Commission expects the assignment of Violation Risk Factors corresponding to Requirements that address similar reliability goals in different Reliability Standards would be treated comparably.

Guideline (4) — Consistency with NERC's Definition of the Violation Risk Factor Level

Guideline (4) was developed to evaluate whether the assignment of a particular Violation Risk Factor level conforms to NERC's definition of that risk level.

Guideline (5) — Treatment of Requirements that Co-mingle More Than One Obligation

Where a single Requirement co-mingles a higher risk reliability objective and a lesser risk reliability objective, the VRF assignment for such Requirements must not be watered down to reflect the lower risk level associated with the less important objective of the Reliability Standard.

The following discussion addresses how the SDT considered FERC's VRF Guidelines 2 through 5. The team did not address Guideline 1 directly because of an apparent conflict between Guidelines 1 and 4. Whereas Guideline 1 identifies a list of topics that encompass nearly all topics within NERC's Reliability Standards and implies that these requirements should be assigned a "High" VRF, Guideline 4 directs assignment of VRFs based on the impact of a specific requirement to the reliability of the system. The SDT believes that Guideline 4 is reflective of the intent of VRFs in the first instance and therefore concentrated its approach on the reliability impact of the requirements.

PRC-005-2 Protection System Maintenance is a revision of PRC-005-1a Transmission and Generation Protection System Maintenance and Testing with the stated purpose: To document and implement programs for the maintenance of all Protection Systems affecting the reliability of the Bulk Electric System (BES) so that these Protection Systems are kept in working order. PRC-008-0 Implementation and Documentation of Underfrequency Load Shedding Equipment Maintenance Program, PRC-011-0 Undervoltage Load Shedding System Maintenance and Testing and PRC-017-0 Special Protection System Maintenance and Testing are also being replaced by merging them into PRC-005-2 in accordance with suggestions from FERC Order 693. PRC-005-2 also establishes maximum allowable maintenance intervals as directed by FERC in Order 693 in their discussion of the legacy standards PRC-005-1, PRC-008-0, PRC-011-0, and PRC-017-0.

PRC-005-2 has five (5) requirements that incorporate and enhance the intent of the requirements of PRC-005-1a, PRC-008-0, PRC-011-0, and PRC-017-0. Several Tables of minimum maintenance activities and maximum maintenance intervals are also included to addresses FERC's directives from Order 693. The revised standard requires that entities develop an appropriate Protection System Maintenance Program (PSMP), that they implement their PSMP, and that, in the event they are unable to restore Protection System components to proper working order while performing maintenance, they initiate the follow-up activities necessary to resolve those maintenance issues.

The requirements of PRC-005-2 do not map, one-to-one, with the requirements of the legacy standards, each of which comingle various attributes addressed within the new standard; thus, a requirement-to-requirement comparison of VRFs is irrelevant. When developing VRFs for the requirements of PRC-005-2, the Standard Drafting Team carefully considered the NERC criteria for developing VRFs, as well as the FERC VRF guidelines. Therefore, PRC-005-2 Requirements R3 and R4 are assigned a VRF of High, while Requirements R1, R2, and R5 are assigned VRFs of Medium.

PRC-005-2 Requirements R1 and R2 are related to developing and documenting a Protection System Maintenance Program. The Standard Drafting Team determined that the assignment of a VRF of Medium was consistent with the NERC criteria that violations of these requirements could directly affect the electrical state or the capability of the bulk electric system, or the ability to effectively monitor and control the bulk electric system but are unlikely to lead to bulk electric system instability, separation, or cascading failures. Additionally, a review of the body of existing NERC Standards with approved VRFs revealed that requirements with similar reliability objectives in other standards are largely assigned a VRF of Medium.

PRC-005-2 Requirements R3 and R4 are related to implementation of the Protection System Maintenance Program. The SDT determined that the assignment of a VRF of High was consistent with the NERC criteria that that violation of these requirements could directly cause or contribute to bulk electric system instability, separation, or a cascading sequence of failures, or could place the bulk electric system at an unacceptable risk of instability, separation, or cascading failures. Additionally, a review of the body of existing NERC Standards with approved VRFs revealed that requirements with similar reliability objectives in other standards are assigned a VRF of High.

PRC-005-2 Requirement R5 relates to the initiation of resolution of unresolved maintenance issues, which describe situations where an entity was unable to restore a component to proper working order during the performance of the maintenance activity. The Standard Drafting Team determined that the assignment of a VRF of Medium was consistent with the NERC criteria that violation of this requirements could directly affect the electrical state or the capability of the bulk electric system, or the ability to effectively monitor and control the bulk electric system but are unlikely to lead to bulk electric system instability, separation, or cascading failures. Additionally, a review of the body of existing NERC Standards with approved VRFs revealed that requirements with similar reliability objectives in other standards are largely assigned a VRF of Medium.

NERC Criteria - Violation Severity Levels

Violation Severity Levels (VSLs) define the degree to which compliance with a requirement was not achieved. Each requirement must have at least one VSL. While it is preferable to have four VSLs for each requirement, some requirements do not have multiple "degrees" of noncompliant performance and may have only one, two, or three VSLs.

Violation severity levels should be based on the guidelines shown in the table below:

Lower	Moderate	High	Severe
Missing a minor element (or a small percentage) of the required performance The performance or product measured has significant value as it almost meets the full intent of the requirement.	Missing at least one significant element (or a moderate percentage) of the required performance. The performance or product measured still has significant value in meeting the intent of the requirement.	Missing more than one significant element (or is missing a high percentage) of the required performance or is missing a single vital component. The performance or product has limited value in meeting the intent of the requirement.	Missing most or all of the significant elements (or a significant percentage) of the required performance. The performance measured does not meet the intent of the requirement or the product delivered cannot be used in meeting the intent of the requirement.

FERC Order on Violation Severity Levels

In its June 19, 2008 Order on Violation Severity Levels, FERC indicated it would use the following four guidelines for determining whether to approve VSLs:

Guideline 1: Violation Severity Level Assignments Should Not Have the Unintended Consequence of Lowering the Current Level of Compliance

- Compare the VSLs to any prior Levels of Non-compliance and avoid significant changes that may encourage a lower level of compliance than was required when Levels of Non-compliance were used.

Guideline 2: Violation Severity Level Assignments Should Ensure Uniformity and Consistency in the Determination of Penalties

- Guideline 2a: A violation of a "binary" type requirement must be a "Severe" VSL.
- Guideline 2b: Do not use ambiguous terms such as "minor" and "significant" to describe noncompliant performance.

Guideline 3: Violation Severity Level Assignment Should Be Consistent with the Corresponding Requirement

- VSLs should not expand on what is required in the requirement.

Guideline 4: Violation Severity Level Assignment Should Be Based on A Single Violation, Not on A Cumulative Number of Violations

- . . . unless otherwise stated in the requirement, each instance of non-compliance with a requirement is a separate violation. Section 4 of the Sanction Guidelines states that assessing penalties on a per violation per day basis is the "default" for penalty calculations.

VRF and VSL Justifications

VRF and VSL Justifications – PRC-005-2, R1	
Proposed VRF	**Medium**
NERC VRF Discussion	Failure to establish a Protection System Maintenance Program (PSMP) for Protection Systems designed to provide protection for BES Element(s) could directly affect the electrical state or the capability of the bulk power system. However, violation of this requirement is unlikely to lead to bulk power system instability, separation, or cascading failures. The applicable entities are always responsible for maintaining the reliability of the bulk power system regardless of the situation. This VRF emphasizes the risk to system performance that results from mal-performing Protection System Components. Failure to establish a Protection System Maintenance Program (PSMP) for Protection Systems will not, by itself, lead to instability, separation, or cascading failures. Thus, the requirement meets NERC's criteria for a Medium VRF.
FERC VRF G1 Discussion	Guideline 1- Consistency w/ Blackout Report: N/A
FERC VRF G2 Discussion	Guideline 2- Consistency within a Reliability Standard: The requirement has no sub-requirements so only one VRF was assigned. The requirement utilizes Parts to identify the items to be included within a Protection System Maintenance Program. The VRF for this requirement is consistent with others in the standard with regard to relative risk; therefore, there is no conflict.
FERC VRF G3 Discussion	Guideline 3- Consistency among Reliability Standards: The SDT has determined that there is no consistency among existing approved Standards relative to requirements of this nature. The SDT has assigned a MEDIUM VRF, which is consistent with recent FERC guidance on FAC-008-3 Requirement R2 and FAC-013-2 Requirement R1, which are similar in nature to PRC-005-2 Requirement R1.

VRF and VSL Justifications – PRC-005-2, R1			
Proposed VRF	**Medium**		
FERC VRF G4 Discussion	Guideline 4- Consistency with NERC Definitions of VRFs: Failure to establish a Protection System Maintenance Program (PSMP) for Protection Systems designed to provide protection for BES Element(s) could directly affect the electrical state or the capability of the bulk power system. However, violation of this requirement is unlikely to lead to bulk power system instability, separation, or cascading failures. The applicable entities are always responsible for maintaining the reliability of the bulk power system regardless of the situation. This VRF emphasizes the risk to system performance that results from mal-performing Protection System Components. Failure to establish a Protection System Maintenance Program (PSMP) for Protection Systems will not, by itself, lead to instability, separation, or cascading failures. Thus, the requirement meets NERC's criteria for a Medium VRF..		
FERC VRF G5 Discussion	Guideline 5- Treatment of Requirements that Co-mingle More than One Obligation: This requirement establishes a single risk-level, and the assigned VRF is consistent with that risk level.		
Proposed VSL			
Lower	**Moderate**	**High**	**Severe**
The responsible entity's PSMP failed to specify whether one component type is being addressed by time-based or performance-based maintenance, or a combination of both. (Part 1.1)	The responsible entity's PSMP failed to specify whether two component types are being addressed by time-based or performance-based maintenance, or a combination of both. (Part 1.1)	The responsible entities' PSMP failed to include the applicable monitoring attributes applied to each Protection System component type consistent with the maintenance intervals specified in Tables 1-1 through 1-	The responsible entity failed to establish a PSMP. OR The responsible entity failed to specify whether three or more component types are being

Proposed VSL			
Lower	**Moderate**	**High**	**Severe**
OR The responsible entity's PSMP failed to include applicable station batteries in a time-based program (Part 1.1)		5, Table 2, and Table 3 where monitoring is used to extend the maintenance intervals beyond those specified for unmonitored Protection System components (Part 1.2).	addressed by time-based or performance-based maintenance, or a combination of both. (Part 1.1).

VRF and VSL Justifications – PRC-005-2, R1	
NERC VSL Guidelines	Meets NERC's VSL Guidelines—There is an incremental aspect to the violation and the VSLs follow the guidelines for incremental violations.
FERC VSL G1 Violation Severity Level Assignments Should Not Have the Unintended Consequence of Lowering the Current Level of Compliance	This VSL is consistent with the current VSLs associated with the existing requirements of the standards being replaced by this proposed standard.
FERC VSL G2 Violation Severity Level Assignments Should Ensure Uniformity and Consistency in the Determination of Penalties Guideline 2a: The Single Violation Severity Level Assignment Category for "Binary" Requirements Is Not Consistent Guideline 2b: Violation Severity Level Assignments that Contain Ambiguous Language	Guideline 2a: N/A Guideline 2b: The proposed VSL does not use any ambiguous terminology, thereby supporting uniformity and consistency in the determination of similar penalties for similar violations.

VRF and VSL Justifications – PRC-005-2, R1	
FERC VSL G3 Violation Severity Level Assignment Should Be Consistent with the Corresponding Requirement	The proposed VSL uses similar terminology to that used in the associated requirement, and is therefore consistent with the requirement.
FERC VSL G4 Violation Severity Level Assignment Should Be Based on A Single Violation, Not on A Cumulative Number of Violations	The VSL is based on a single violation and not cumulative violations.

VRF and VSL Justifications – PRC-005-2, R2	
Proposed VRF	**Medium**
NERC VRF Discussion	Failure to properly establish a performance-based Protection System Maintenance Program (PSMP) for Protection Systems designed to provide protection for BES Element(s) could directly affect the electrical state or the capability of the bulk power system. However, violation of this requirement is unlikely to lead to bulk power system instability, separation, or cascading failures. The applicable entities are always responsible for maintaining the reliability of the bulk power system regardless of the situation. This VRF emphasizes the risk to system performance that results from mal-performing Protection System Components. Failure to properly establish a performance-based Protection System Maintenance Program (PSMP) for Protection Systems will not, by itself, lead to instability, separation, or cascading failures. Thus, the requirement meets NERC's criteria for a Medium VRF.
FERC VRF G1 Discussion	Guideline 1- Consistency w/ Blackout Report: N/A
FERC VRF G2 Discussion	Guideline 2- Consistency within a Reliability Standard: The requirement has no subpart(s); therefore, only one VRF was assigned and no conflict(s) exist.
FERC VRF G3 Discussion	Guideline 3- Consistency among Reliability Standards: The SDT has determined that there is no consistency among existing approved Standards relative to requirements of this nature. The SDT has assigned a MEDIUM VRF, which is consistent with recent FERC guidance on FAC-008-3 Requirement R2 and FAC-013-2 Requirement R1, which are similar in nature to PRC-005-2 Requirement R1.
FERC VRF G4 Discussion	Guideline 4- Consistency with NERC Definitions of VRFs: Failure to properly establish a performance-based Protection System Maintenance Program (PSMP) for .

VRF and VSL Justifications – PRC-005-2, R2			
Proposed VRF	**Medium**		
	Protection Systems designed to provide protection for BES Element(s) could directly affect the electrical state or the capability of the bulk power system. However, violation of this requirement is unlikely to lead to bulk power system instability, separation, or cascading failures. The applicable entities are always responsible for maintaining the reliability of the bulk power system regardless of the situation. This VRF emphasizes the risk to system performance that results from mal-performing Protection System Components. Failure to properly establish a performance-based Protection System Maintenance Program (PSMP) for Protection Systems will not, by itself, lead to instability, separation, or cascading failures. Thus, the requirement meets NERC's criteria for a Medium VRF.		
FERC VRF G5 Discussion	Guideline 5- Treatment of Requirements that Co-mingle More than One Obligation: This requirement establishes a single risk-level, and the assigned VRF is consistent with that risk level.		
Proposed VSL			
Lower	**Moderate**	**High**	**Severe**
The responsible entity uses performance-based maintenance intervals in its PSMP but failed to reduce countable events to less than 4% within three years.	N/A	The responsible entity uses performance-based maintenance intervals in its PSMP but failed to reduce countable events to less than 4% within four years.	The responsible entity uses performance-based maintenance intervals in its PSMP but: 1)Failed to establish the technical justification described within Requirement R2 for the initial use of the performance-based PSMP

Proposed VSL			
Lower	**Moderate**	**High**	**Severe**
			OR 2) Failed to reduce countable events to less than 4% within five years OR 3) Maintained a segment with less than 60 components OR 4) Failed to: • Annually update the list of components, OR • Annually perform maintenance on the greater of 5% of the segment population or 3 components, OR • Annually analyze the program activities and results for each segment.

VRF and VSL Justifications – PRC-005-2, R2	
NERC VSL Guidelines	Meets NERC's VSL Guidelines—There is an incremental aspect to the violation and the VSLs follow the guidelines for incremental violations.
FERC VSL G1 Violation Severity Level Assignments Should Not Have the Unintended Consequence of Lowering the Current Level of Compliance	This VSL is consistent with the current VSLs associated with the existing requirements of the standards being replaced by this proposed standard.
FERC VSL G2 Violation Severity Level Assignments Should Ensure Uniformity and Consistency in the Determination of Penalties Guideline 2a: The Single Violation Severity Level Assignment Category for "Binary" Requirements Is Not Consistent	Guideline 2a: N/A Guideline 2b: The proposed VSL does not use any ambiguous terminology, thereby supporting uniformity and consistency in the determination of similar penalties for similar violations.

VRF and VSL Justifications – PRC-005-2, R2	
Guideline 2b: Violation Severity Level Assignments that Contain Ambiguous Language	
FERC VSL G3 Violation Severity Level Assignment Should Be Consistent with the Corresponding Requirement	The proposed VSL uses similar terminology to that used in the associated requirement, and is therefore consistent with the requirement.
FERC VSL G4 Violation Severity Level Assignment Should Be Based on A Single Violation, Not on A Cumulative Number of Violations	The VSL is based on a single violation and not cumulative violations.

VRF and VSL Justifications – PRC-005-2, R3	
Proposed VRF	**High**
NERC VRF Discussion	Failure to implement and follow its Protection System Maintenance Program (PSMP) could, under emergency, abnormal, or restorative conditions anticipated by the preparations, directly cause or contribute to bulk electric system instability, separation, or a cascading sequence of failures, or could place the bulk electric system at an unacceptable risk of instability, separation, or cascading failures, or could hinder restoration to a normal condition. Thus, this requirement meets the criteria for a High VRF.
FERC VRF G1 Discussion	Guideline 1- Consistency w/ Blackout Report: N/A
FERC VRF G2 Discussion	Guideline 2- Consistency within a Reliability Standard: The requirement has no subpart(s); therefore, only one VRF was assigned and no conflict(s) exist.
FERC VRF G3 Discussion	Guideline 3- Consistency among Reliability Standards: The only Reliability Standards with similar goals are those being replaced by this standard, and the High VRF assignment for this requirement is consistent with the assigned VRFs for companion requirements in those existing standards.
FERC VRF G4 Discussion	Guideline 4- Consistency with NERC Definitions of VRFs: Failure to implement and follow its Protection System Maintenance Program (PSMP) could, under emergency, abnormal, or restorative conditions anticipated by the preparations, directly cause or contribute to bulk electric system instability, separation, or a cascading sequence of failures, or could place the bulk electric system at an unacceptable risk of instability, separation, or cascading failures, or could hinder restoration to a normal condition. Thus, this requirement meets the criteria for a High VRF.
FERC VRF G5 Discussion	Guideline 5- Treatment of Requirements that Co-mingle More than One Obligation: This requirement establishes a single risk-level, and the assigned VRF is consistent with that risk level.

Proposed VSL			
Lower	**Moderate**	**High**	**Severe**
For Protection System components included within a time-based maintenance program, the responsible entity failed to maintain 5% or less of the total components included within a specific Protection System component type, in accordance with the minimum maintenance activities and maximum maintenance intervals prescribed within Tables 1-1 through 1-5, Table 2, and Table 3.	For Protection System components included within a time-based maintenance program, the responsible entity failed to maintain more than 5% but 10% or less of the total components included within a specific Protection System component type, in accordance with the minimum maintenance activities and maximum maintenance intervals prescribed within Tables 1-1 through 1-5, Table 2, and Table 3.	For Protection System components included within a time-based maintenance program, the responsible entity failed to maintain more than 10% but 15% or less of the total components included within a specific Protection System component type, in accordance with the minimum maintenance activities and maximum maintenance intervals prescribed within Tables 1-1 through 1-5, Table 2, and Table 3.	For Protection System components included within a time-based maintenance program, the responsible entity failed to maintain more than 15% of the total components included within a specific Protection System component type, in accordance with the minimum maintenance activities and maximum maintenance intervals prescribed within Tables 1-1 through 1-5, Table 2, and Table 3.

VRF and VSL Justificati3ons – PRC-005-2, R3	
NERC VSL Guidelines	Meets NERC's VSL Guidelines—There is an incremental aspect to the violation and the VSLs follow the guidelines for incremental violations.
FERC VSL G1 Violation Severity Level Assignments Should Not Have the Unintended Consequence of Lowering the Current Level of Compliance	This VSL is consistent with the current VSLs associated with the existing requirements of the standards being replaced by this proposed standard.
FERC VSL G2 Violation Severity Level Assignments Should Ensure Uniformity and Consistency in the Determination of Penalties Guideline 2a: The Single Violation Severity Level Assignment Category for "Binary" Requirements Is Not Consistent Guideline 2b: Violation Severity Level Assignments that Contain Ambiguous Language	Guideline 2a: N/A Guideline 2b: The proposed VSL does not use any ambiguous terminology, thereby supporting uniformity and consistency in the determination of similar penalties for similar violations.

VRF and VSL Justifications – PRC-005-2, R3	
FERC VSL G3 Violation Severity Level Assignment Should Be Consistent with the Corresponding Requirement	The proposed VSL uses similar terminology to that used in the associated requirement, and is therefore consistent with the requirement.
FERC VSL G4 Violation Severity Level Assignment Should Be Based on A Single Violation, Not on A Cumulative Number of Violations	The VSL is based on a single violation and not cumulative violations.

VRF and VSL Justifications – PRC-005-2, R4	
Proposed VRF	**High**
NERC VRF Discussion	Failure to implement and follow its Protection System Maintenance Program (PSMP) could, under emergency, abnormal, or restorative conditions anticipated by the preparations, directly cause or contribute to bulk electric system instability, separation, or a cascading sequence of failures, or could place the bulk electric system at an unacceptable risk of instability, separation, or cascading failures, or could hinder restoration to a normal condition. Thus, this requirement meets the criteria for a High VRF.
FERC VRF G1 Discussion	Guideline 1- Consistency w/ Blackout Report: N/A
FERC VRF G2 Discussion	Guideline 2- Consistency within a Reliability Standard: The requirement has no subpart(s); therefore, only one VRF was assigned and no conflict(s) exist.
FERC VRF G3 Discussion	Guideline 3- Consistency among Reliability Standards: The only Reliability Standards with similar goals are those being replaced by this standard, and the High VRF assignment for this requirement is consistent with the assigned VRFs for companion requirements in those existing standards.
FERC VRF G4 Discussion	Guideline 4- Consistency with NERC Definitions of VRFs: Failure to implement and follow its Protection System Maintenance Program (PSMP) could, under emergency, abnormal, or restorative conditions anticipated by the preparations, directly cause or contribute to bulk electric system instability, separation, or a cascading sequence of failures, or could place the bulk electric system at an unacceptable risk of instability, separation, or cascading failures, or could hinder restoration to a normal condition. Thus, this requirement meets the criteria for a High VRF.
FERC VRF G5 Discussion	Guideline 5- Treatment of Requirements that Co-mingle More than One Obligation: This requirement establishes a single risk-level, and the assigned VRF is consistent with that risk level.

Proposed VSL			
Lower	**Moderate**	**High**	**Severe**
For Protection System components included within a performance-based maintenance program, the responsible entity failed to maintain 5% or less of the annual scheduled maintenance for a specific Protection System component type in accordance with their performance-based PSMP.	For Protection System components included within a performance-based maintenance program, the responsible entity failed to maintain more than 5% but 10% or less of the annual scheduled maintenance for a specific Protection System component type in accordance with their performance-based PSMP.	For Protection System components included within a performance-based maintenance program, the responsible entity failed to maintain more than 10% but 15% or less of the annual scheduled maintenance for a specific Protection System component type in accordance with their performance-based PSMP.	For Protection System components included within a performance-based maintenance program, the responsible entity failed to maintain more than 15% of the annual scheduled maintenance for a specific Protection System component type in accordance with their performance-based PSMP.

VRF and VSL Justifications – PRC-005-2, R4	
NERC VSL Guidelines	Meets NERC's VSL Guidelines—There is an incremental aspect to the violation and the VSLs follow the guidelines for incremental violations.
FERC VSL G1 Violation Severity Level Assignments Should Not Have the Unintended Consequence of Lowering the Current Level of Compliance	This VSL is consistent with the current VSLs associated with the existing requirements of the standards being replaced by this proposed standard.
FERC VSL G2 Violation Severity Level Assignments Should Ensure Uniformity and Consistency in the Determination of Penalties Guideline 2a: The Single Violation Severity Level Assignment Category for "Binary" Requirements Is Not Consistent Guideline 2b: Violation Severity Level Assignments that Contain Ambiguous Language	Guideline 2a: N/A Guideline 2b: The proposed VSL does not use any ambiguous terminology, thereby supporting uniformity and consistency in the determination of similar penalties for similar violations.

VRF and VSL Justifications – PRC-005-2, R4	
FERC VSL G3 Violation Severity Level Assignment Should Be Consistent with the Corresponding Requirement	The proposed VSL uses similar terminology to that used in the associated requirement, and is therefore consistent with the requirement.
FERC VSL G4 Violation Severity Level Assignment Should Be Based on A Single Violation, Not on A Cumulative Number of Violations	The VSL is based on a single violation and not cumulative violations.

VRF and VSL Justifications – PRC-005-2, R5	
Proposed VRF	**Medium**
NERC VRF Discussion	Failure to initiate resolution of an unresolved maintenance issue for a Protection System component could directly affect the electrical state or the capability of the bulk power system. However, violation of this requirement is unlikely to lead to bulk power system instability, separation, or cascading failures. The applicable entities are always responsible for maintaining the reliability of the bulk power system regardless of the situation. This VRF emphasizes the risk to system performance that results from mal-performing Protection System Components. Failure to initiate resolution of an unresolved maintenance issue for a Protection System component will not, by itself, lead to instability, separation, or cascading failures. Thus, the requirement meets NERC's criteria for a Medium VRF.
FERC VRF G1 Discussion	Guideline 1- Consistency w/ Blackout Report: N/A
FERC VRF G2 Discussion	Guideline 2- Consistency within a Reliability Standard: The requirement has no subpart(s); therefore, only one VRF was assigned and no conflict(s) exist.
FERC VRF G3 Discussion	Guideline 3- Consistency among Reliability Standards: The only requirement within approved Standards, PRC-004-2a Requirements R1 and R2 contain a similar requirement and is assigned a HIGH VRF. However, these requirements contain several subparts, and the VRF must address the most egregious risk related to these subparts, and a comparison to these requirements may be irrelevant. PRC-022-1 Requirement R1.5 contains only a similar requirement, and is assigned a MEDIUM VRF. FAC-003-2 Requirement R5 contains only a similar requirement, and is assigned a MEDIUM VRF.
FERC VRF G4 Discussion	Guideline 4- Consistency with NERC Definitions of VRFs: Failure to initiate resolution of an unresolved maintenance issue for a Protection System component could directly affect the electrical state or the capability of the bulk power system.

VRF and VSL Justifications – PRC-005-2, R5			
Proposed VRF	**Medium**		
	However, violation of this requirement is unlikely to lead to bulk power system instability, separation, or cascading failures. The applicable entities are always responsible for maintaining the reliability of the bulk power system regardless of the situation. This VRF emphasizes the risk to system performance that results from mal-performing Protection System Components. Failure to initiate resolution of an unresolved maintenance issue for a Protection System component will not, by itself, lead to instability, separation, or cascading failures. Thus, the requirement meets NERC's criteria for a Medium VRF.		
FERC VRF G5 Discussion	Guideline 5- Treatment of Requirements that Co-mingle More than One Obligation: This requirement establishes a single risk-level, and the assigned VRF is consistent with that risk level.		
Proposed VSL			
Lower	**Moderate**	**High**	**Severe**
The responsible entity failed to undertake efforts to correct 5 or less unresolved maintenance issues.	The responsible entity failed to undertake efforts to correct greater than 5, but less than or equal to 10 unresolved maintenance issues.	The responsible entity failed to undertake efforts to correct greater than 10, but less than or equal to 15 unresolved maintenance issues.	The responsible entity failed to undertake efforts to correct greater than 15 unresolved maintenance issues.

VRF and VSL Justifications – PRC-005-2, R5	
NERC VSL Guidelines	Meets NERC's VSL Guidelines—There is an incremental aspect to the violation and the VSLs follow the guidelines for incremental violations.
FERC VSL G1 Violation Severity Level Assignments Should Not Have the Unintended Consequence of Lowering the Current Level of Compliance	This is a new Requirement; consequently, there is no prior level of compliance.
FERC VSL G2 Violation Severity Level Assignments Should Ensure Uniformity and Consistency in the Determination of Penalties Guideline 2a: The Single Violation Severity Level Assignment Category for "Binary" Requirements Is Not Consistent Guideline 2b: Violation Severity Level Assignments that Contain Ambiguous Language	Guideline 2a: N/A Guideline 2b: The proposed VSL does not use any ambiguous terminology, thereby supporting uniformity and consistency in the determination of similar penalties for similar violations.

VRF and VSL Justifications – PRC-005-2, R5	
FERC VSL G3 Violation Severity Level Assignment Should Be Consistent with the Corresponding Requirement	The proposed VSL uses similar terminology to that used in the associated requirement, and is therefore consistent with the requirement.
FERC VSL G4 Violation Severity Level Assignment Should Be Based on A Single Violation, Not on A Cumulative Number of Violations	The VSL is based on a single violation and not cumulative violations.

NERC
NORTH AMERICAN ELECTRIC RELIABILITY CORPORATION

Project 2007-17 Protection System Maintenance and Testing

Please **DO NOT** use this form. Please use the electronic comment form on the project page at the link below to submit comments on the second draft of the PRC-005-2 standard for Protection System Maintenance and Testing. Comments must be submitted by **March 28, 2012.** If you have questions please contact Al McMeekin at al.mcmeekin@nerc.net or by telephone at 803-530-1963.

http://www.nerc.com/filez/standards/Protection_System_Maintenance_Project_2007-17.html

Background Information:

This project recently failed to receive two-thirds weighted stakeholder approval on the most recent initial ballot of PRC-005-2. The Protection System Maintenance and Testing Standard Drafting Team (PSMT SDT) has made several changes to PRC-005-2 based on comments received from industry. The changes include:

- Revised Requirement R1 to state that an entity's Protection System Maintenance Program (PSMP) shall include for each Protection System component type: an identification of the maintenance method(s) used, and the identification of the relevant monitoring attributes applied.
- Separated Requirement R3 into three requirements:
  - Requirement R3 now requires an entity utilizing a time-based program to maintain its Protection System components in accordance with the maximum maintenance intervals listed in the Tables. This change removes the compliance jeopardy associated with an entity having more stringent intervals (in its PSMP) than those listed in the Tables.
  - Requirement R4 (new) requires an entity utilizing a performance-based program to maintain its Protection System components in accordance with its performance-based Protection System Maintenance Program.
  - Requirement R5 (new) requires an entity to demonstrate efforts to correct identified unresolved maintenance issues. The previous language in Requirement R3 directed that an entity initiate resolution.

- Modified the VSLs to reflect the changes listed above.
- The Supplemental Reference and FAQ document was revised to reflect changes made to the draft standard and to address additional issues raised within comments.

The PSMT SDT is posting this standard for a formal 30-day comment period and successive ballot.

For questions 1-3, please provide specific comments related to the individual question. Please reserve question 4 for general comments not related to questions 1-3.

1. In response to comments, the PSMTSDT revised Requirement R1 to state that an entity's Protection System Maintenance Program (PSMP) shall include, for each Protection System component type, an identification of the maintenance method(s) used, and the identification of the relevant monitoring attributes applied. Do you agree with this change? If you do not agree, please provide specific suggestions for improvement.

   ☐ Yes

   ☐ No

   Comments:

2. As a result of the changes to Requirement R1, the previous Requirement R3 was separated into three requirements:

   a. Requirement R3 now requires that an entity utilizing a time-based program maintain its Protection System components in accordance with the maximum maintenance intervals listed in the Tables. This change removes the compliance jeopardy associated with an entity having more stringent intervals (in its PSMP) than those listed in the Tables.

   b. Requirement R4 (new) requires an entity utilizing a performance-based program maintain its Protection System components in accordance with its performance based Protection System Maintenance Program

   c. Requirement R5 (new) requires an entity to demonstrate efforts to correct identified unresolved maintenance issues. The previous language in Requirement R3 directed that an entity initiate resolution.

   Do you agree with this change? If you do not agree, please provide specific suggestions for improvement.

   ☐ Yes

   ☐ No

   Comments:

3. The Supplemental Reference and FAQ document was revised to reflect changes made to the draft standard and to address additional issues raised. Do you agree with the changes? If you do not agree, please provide specific suggestions for improvement.

   ☐ Yes

   ☐ No

   Comments:

4. If you have any other comments on this Standard that you **have not already provided in response to the prior questions**, please provide them here.

   Comments:

A. Introduction

1. Title: **Transmission and Generation Protection System Maintenance and Testing**

2. Number: PRC-005-1

3. Purpose: To ensure all transmission and generation Protection Systems affecting the reliability of the Bulk Electric System (BES) are maintained and tested.

4. Applicability

4.1. Transmission Owner.

4.2. Generator Owner.

4.3. Distribution Provider that owns a transmission Protection System.

5. Effective Date: May 1, 2006

B. Requirements

R1. Each Transmission Owner and any Distribution Provider that owns a transmission Protection System and each Generator Owner that owns a generation Protection System shall have a Protection System maintenance and testing program for Protection Systems that affect the reliability of the BES. The program shall include:

R1.1. Maintenance and testing intervals and their basis.

R1.2. Summary of maintenance and testing procedures.

R2. Each Transmission Owner and any Distribution Provider that owns a transmission Protection System and each Generator Owner that owns a generation Protection System shall provide documentation of its Protection System maintenance and testing program and the implementation of that program to its Regional Reliability Organization on request (within 30 calendar days). The documentation of the program implementation shall include:

R2.1. Evidence Protection System devices were maintained and tested within the defined intervals.

R2.2. Date each Protection System device was last tested/maintained.

C. Measures

M1. Each Transmission Owner and any Distribution Provider that owns a transmission Protection System and each Generator Owner that owns a generation Protection System that affects the reliability of the BES, shall have an associated Protection System maintenance and testing program as defined in Requirement 1.

M2. Each Transmission Owner and any Distribution Provider that owns a transmission Protection System and each Generator Owner that owns a generation Protection System that affects the reliability of the BES, shall have evidence it provided documentation of its associated Protection System maintenance and testing program and the implementation of its program as defined in Requirement 2.

D. Compliance

1. Compliance Monitoring Process

1.1. Compliance Monitoring Responsibility

Regional Reliability Organization.

1.2. Compliance Monitoring Period and Reset Time Frame

One calendar year.

1.3. Data Retention

The Transmission Owner and any Distribution Provider that owns a transmission Protection System and each Generator Owner that owns a generation Protection System, shall retain evidence of the implementation of its Protection System maintenance and testing program for three years.

The Compliance Monitor shall retain any audit data for three years.

1.4. Additional Compliance Information

The Transmission Owner and any Distribution Provider that owns a transmission Protection System and the Generator Owner that owns a generation Protection System, shall each demonstrate compliance through self-certification or audit (periodic, as part of targeted monitoring or initiated by complaint or event), as determined by the Compliance Monitor.

2. Levels of Non-Compliance

2.1. Level 1: Documentation of the maintenance and testing program provided was incomplete as required in R1, but records indicate maintenance and testing did occur within the identified intervals for the portions of the program that were documented.

2.2. Level 2: Documentation of the maintenance and testing program provided was complete as required in R1, but records indicate that maintenance and testing did not occur within the defined intervals.

2.3. Level 3: Documentation of the maintenance and testing program provided was incomplete, and records indicate implementation of the documented portions of the maintenance and testing program did not occur within the identified intervals.

2.4. Level 4: Documentation of the maintenance and testing program, or its implementation, was not provided.

E. Regional Differences

None identified.

Version History

Version	Date	Action	Change Tracking
0	April 1, 2005	Effective Date	New
1	December 1, 2005	1. Changed incorrect use of certain hyphens (-) to “en dash” (–) and “em dash (—).” 2. Added “periods” to items where appropriate. 3. Changed “Timeframe” to “Time Frame” in item D, 1.2.	01/20/05

A. Introduction

1. Title: **Implementation and Documentation of Underfrequency Load Shedding Equipment Maintenance Program**

2. Number: PRC-008-0

3. Purpose: Provide last resort system preservation measures by implementing an Under Frequency Load Shedding (UFLS) program.

4. Applicability:

4.1. Transmission Owner required by its Regional Reliability Organization to have a UFLS program

4.2. Distribution Provider required by its Regional Reliability Organization to have a UFLS program

5. Effective Date: April 1, 2005

B. Requirements

R1. The Transmission Owner and Distribution Provider with a UFLS program (as required by its Regional Reliability Organization) shall have a UFLS equipment maintenance and testing program in place. This UFLS equipment maintenance and testing program shall include UFLS equipment identification, the schedule for UFLS equipment testing, and the schedule for UFLS equipment maintenance.

R2. The Transmission Owner and Distribution Provider with a UFLS program (as required by its Regional Reliability Organization) shall implement its UFLS equipment maintenance and testing program and shall provide UFLS maintenance and testing program results to its Regional Reliability Organization and NERC on request (within 30 calendar days).

C. Measures

M1. Each Transmission Owner's and Distribution Provider's UFLS equipment maintenance and testing program contains the elements specified in Reliability Standard PRC-007-0_R1.

M2. Each Transmission Owner and Distribution Provider shall have evidence that it provided the results of its UFLS equipment maintenance and testing program's implementation to its Regional Reliability Organization and NERC on request (within 30 calendar days).

D. Compliance

1. Compliance Monitoring Process

1.1. Compliance Monitoring Responsibility

Compliance Monitor: Regional Reliability Organization.

1.2. Compliance Monitoring Period and Reset Timeframe

On request (within 30 calendar days).

1.3. Data Retention

None specified.

1.4. Additional Compliance Information

None.

2. Levels of Non-Compliance

2.1. Level 1: Documentation of the maintenance and testing program was incomplete, but records indicate implementation was on schedule.

2.2. Level 2: Complete documentation of the maintenance and testing program was provided, but records indicate that implementation was not on schedule.

2.3. Level 3: Documentation of the maintenance and testing program was incomplete, and records indicate implementation was not on schedule.

2.4. Level 4: Documentation of the maintenance and testing program, or its implementation was not provided.

E. Regional Differences

1. None identified.

Version History

Version	Date	Action	Change Tracking
0	April 1, 2005	Effective Date	New

A. Introduction

1. Title: **Undervoltage Load Shedding System Maintenance and Testing**

2. Number: PRC-011-0

3. Purpose: Provide system preservation measures in an attempt to prevent system voltage collapse or voltage instability by implementing an Undervoltage Load Shedding (UVLS) program.

4. Applicability:

4.1. Transmission Owner that owns a UVLS system

4.2. Distribution Provider that owns a UVLS system

5. Effective Date: April 1, 2005

B. Requirements

R1. The Transmission Owner and Distribution Provider that owns a UVLS system shall have a UVLS equipment maintenance and testing program in place. This program shall include:

R1.1. The UVLS system identification which shall include but is not limited to:

R1.1.1. Relays.

R1.1.2. Instrument transformers.

R1.1.3. Communications systems, where appropriate.

R1.1.4. Batteries.

R1.2. Documentation of maintenance and testing intervals and their basis.

R1.3. Summary of testing procedure.

R1.4. Schedule for system testing.

R1.5. Schedule for system maintenance.

R1.6. Date last tested/maintained.

R2. The Transmission Owner and Distribution Provider that owns a UVLS system shall provide documentation of its UVLS equipment maintenance and testing program and the implementation of that UVLS equipment maintenance and testing program to its Regional Reliability Organization and NERC on request (within 30 calendar days).

C. Measures

M1. Each Transmission Owner and Distribution Provider that owns a UVLS system shall have documentation that its UVLS equipment maintenance and testing program conforms with Reliability Standard PRC-011-0_R1.

M2. Each Transmission Owner and Distribution Provider that owns a UVLS system shall have evidence it provided documentation of its UVLS equipment maintenance and testing program and the implementation of that UVLS equipment maintenance and testing program as specified in Reliability Standard PRC-011-0_R2.

D. Compliance

1. Compliance Monitoring Process

1.1. Compliance Monitoring Responsibility

Compliance Monitor: Regional Reliability Organization.

1.2. Compliance Monitoring Period and Reset Timeframe

On request (30 calendar days).

1.3. Data Retention

None specified.

1.4. Additional Compliance Information

None.

2. Levels of Non-Compliance

2.1. Level 1: Documentation of the maintenance and testing program was incomplete, but records indicate implementation was on schedule.

2.2. Level 2: Documentation of the maintenance and testing program was incomplete, but records indicate implementation was on schedule.

2.3. Level 3: Documentation of the maintenance and testing program was incomplete, and records indicate implementation was not on schedule.

2.4. Level 4: Documentation of the maintenance and testing program, or its implementation, was not provided.

E. Regional Differences

1. None identified.

Version History

Version	Date	Action	Change Tracking
0	April 1, 2005	Effective Date	New

A. Introduction

1. Title: **Special Protection System Maintenance and Testing**

2. Number: PRC-017-0

3. Purpose: To ensure that all Special Protection Systems (SPS) are properly designed, meet performance requirements, and are coordinated with other protection systems. To ensure that maintenance and testing programs are developed and misoperations are analyzed and corrected.

4. Applicability:

4.1. Transmission Owner that owns an SPS

4.2. Generator Owner that owns an SPS

4.3. Distribution Provider that owns an SPS

5. Effective Date: April 1, 2005

B. Requirements

R1. The Transmission Owner, Generator Owner, and Distribution Provider that owns an SPS shall have a system maintenance and testing program(s) in place. The program(s) shall include:

R1.1. SPS identification shall include but is not limited to:

R1.1.1. Relays.

R1.1.2. Instrument transformers.

R1.1.3. Communications systems, where appropriate.

R1.1.4. Batteries.

R1.2. Documentation of maintenance and testing intervals and their basis.

R1.3. Summary of testing procedure.

R1.4. Schedule for system testing.

R1.5. Schedule for system maintenance.

R1.6. Date last tested/maintained.

R2. The Transmission Owner, Generator Owner, and Distribution Provider that owns an SPS shall provide documentation of the program and its implementation to the appropriate Regional Reliability Organizations and NERC on request (within 30 calendar days).

C. Measures

M1. The Transmission Owner, Generator Owner, and Distribution Provider that owns an SPS shall have a system maintenance and testing program(s) in place that includes all items in Reliability Standard PRC-017-0_R1.

M2. The Transmission Owner, Generator Owner, and Distribution Provider that owns an SPS shall have evidence it provided documentation of the program and its implementation to the appropriate Regional Reliability Organizations and NERC on request (within 30 calendar days).

D. Compliance

1. Compliance Monitoring Process

1.1. Compliance Monitoring Responsibility

Compliance Monitor: Regional Reliability Organization. Each Region shall report compliance and violations to NERC via the NERC Compliance Reporting process.

Timeframe:
On request (30 calendar days.)

1.2. Compliance Monitoring Period and Reset Timeframe

Compliance Monitor: Regional Reliability Organization.

1.3. Data Retention

None specified.

1.4. Additional Compliance Information

None.

2. Levels of Non-Compliance

2.1. Level 1: Documentation of the maintenance and testing program was incomplete, but records indicate implementation was on schedule.

2.2. Level 2: Complete documentation of the maintenance and testing program was provided, but records indicate that implementation was not on schedule.

2.3. Level 3: Documentation of the maintenance and testing program was incomplete, and records indicate implementation was not on schedule.

2.4. Level 4: Documentation of the maintenance and testing program, or its implementation, was not provided.

E. Regional Differences

1. None identified.

Version History

Version	Date	Action	Change Tracking
0	April 1, 2005	Effective Date	New

NERC
NORTH AMERICAN ELECTRIC RELIABILITY CORPORATION

Standards Announcement

Project 2007-17 Protection System Maintenance and Testing

Ballot and Non-binding Poll Windows Open Through 8 p.m. Wednesday, Mar. 28, 2012

Now Available

A successive ballot of PRC-005-2 – Protection System Maintenance and Testing and a non-binding poll of the associated VRFs and VSLs, are **open through 8 p.m. Eastern on Wednesday, March 28, 2012.**

Instructions for Balloting

Members of the ballot pool associated with this project may log in and submit their vote for the Standard, and opinion for the non-binding poll by clicking here.

Special Instructions for Submitting Comments with a Ballot

Please note that comments submitted during the formal comment period, ballot, and non-binding poll all use the same electronic form. Therefore, it is NOT necessary for ballot pool members to submit more than one set of comments. Companies or entities with representatives in multiple segments of the ballot pool may submit a single set of comments by identifying themselves as a "group" on the comment form. Likewise, it is **preferable** for a group of separate entities that develop comments jointly to submit the comments as a "group." **The drafting team requests that all stakeholders (ballot pool members as well as other stakeholders) submit all comments through the electronic comment form, and that companies in multiple segments as well as individual entities that develop joint comments with other entities submit their comments as a "group."**

Next Steps

The drafting team will consider all comments and determine what changes to make in response to stakeholder input from the comments.

Project Background

The proposed PRC-005-2 – Protection System Maintenance standard addresses FERC directives from FERC Order 693, as well as issues identified by stakeholders. In accordance with the FERC directives, this draft standard establishes requirements for a time-based maintenance program, where all relevant devices are maintained according to prescribed maximum intervals. It further establishes requirements for a condition-based maintenance program, where the hands-on maintenance intervals are adjusted to reflect the known and reported condition of the relevant devices. For a performance-based maintenance program, it ascertains where the hands-on maintenance intervals are adjusted to reflect the historical performance of the relevant devices.

Standards Development Process

The Standard Processes Manual contains all the procedures governing the standards development process. The success of the NERC standards development process depends on stakeholder participation. We extend our thanks to all those who participate. For more information or assistance, please contact Monica Benson at monica.benson@nerc.net.

For more information or assistance, please contact Monica Benson, Standards Process Administrator, at monica.benson@nerc.net or at 404-446-2560.

North American Electric Reliability Corporation
3353 Peachtree Rd NE
Suite 600, North Tower
Atlanta, GA 30326
404-446-2560 | www.nerc.com

NERC
NORTH AMERICAN ELECTRIC RELIABILITY CORPORATION

Standards Announcement

Project 2007-17 Protection System Maintenance and Testing

Ballot and Non-binding Poll Windows Open Through 8 p.m. Wednesday, Mar. 28, 2012

Now Available

A successive ballot of PRC-005-2 – Protection System Maintenance and Testing and a non-binding poll of the associated VRFs and VSLs, are **open through 8 p.m. Eastern on Wednesday, March 28, 2012.**

Instructions for Balloting

Members of the ballot pool associated with this project may log in and submit their vote for the Standard, and opinion for the non-binding poll by clicking here.

Special Instructions for Submitting Comments with a Ballot

Please note that comments submitted during the formal comment period, ballot, and non-binding poll all use the same electronic form. Therefore, it is NOT necessary for ballot pool members to submit more than one set of comments. Companies or entities with representatives in multiple segments of the ballot pool may submit a single set of comments by identifying themselves as a "group" on the comment form. Likewise, it is **preferable** for a group of separate entities that develop comments jointly to submit the comments as a "group." **The drafting team requests that all stakeholders (ballot pool members as well as other stakeholders) submit all comments through the electronic comment form, and that companies in multiple segments as well as individual entities that develop joint comments with other entities submit their comments as a "group."**

Next Steps

The drafting team will consider all comments and determine what changes to make in response to stakeholder input from the comments.

Project Background

The proposed PRC-005-2 – Protection System Maintenance standard addresses FERC directives from FERC Order 693, as well as issues identified by stakeholders. In accordance with the FERC directives, this draft standard establishes requirements for a time-based maintenance program, where all relevant devices are maintained according to prescribed maximum intervals. It further establishes requirements for a condition-based maintenance program, where the hands-on maintenance intervals are adjusted to reflect the known and reported condition of the relevant devices. For a performance-based maintenance program, it ascertains where the hands-on maintenance intervals are adjusted to reflect the historical performance of the relevant devices.

Standards Development Process

The Standard Processes Manual contains all the procedures governing the standards development process. The success of the NERC standards development process depends on stakeholder participation. We extend our thanks to all those who participate. For more information or assistance, please contact Monica Benson at monica.benson@nerc.net.

For more information or assistance, please contact Monica Benson, Standards Process Administrator, at monica.benson@nerc.net or at 404-446-2560.

North American Electric Reliability Corporation
3353 Peachtree Rd NE
Suite 600, North Tower
Atlanta, GA 30326
404-446-2560 | www.nerc.com

NERC
NORTH AMERICAN ELECTRIC RELIABILITY CORPORATION

Standards Announcement

Project 2007-17 Protection System Maintenance and Testing
Formal Comment Period Open February 28 – March 28, 2012
Successive Ballot and Non-binding Poll: March 19 – 28, 2012

Now available

The Protection System Maintenance and Testing drafting team (PSMSDT) has posted its consideration of comments from the formal comment period and initial ballot of PRC-005-2 Protection System Maintenance that ended on September 29, 2011, along with a revised draft of the standard, Supplemental Reference and FAQ, and associated implementation plan for a parallel formal comment period and successive ballot, with a non-binding poll of the associated VRFs and VSLs, are open through **8 p.m. Eastern on Wednesday, March, 28, 2012**.

Documents for this project, including the SAR, clean and redline versions of PRC-005-2, the associated Implementation Plan, and Supplemental Reference and FAQ along with an unofficial copy of the comment form are posted on the project's web page. Note that PRC-005-2 reflects the merging of the following standards into a single standard, making it impractical to post a redline of proposed PRC-005-2 that shows the changes to the last approved version of the standard.

- PRC-005-1 — Transmission and Generation Protection System Maintenance and Testing
- PRC-008-0 — Underfrequency Load Shedding Equipment Maintenance Program
- PRC-011-0 — UVLS System Maintenance and Testing
- PRC-017-0 — Special Protection System Maintenance and Testing

The last approved versions of PRC-005-1, PRC-008-0, PRC-011-0, and PRC-017-0 have been posted on the project's web page for easy reference.

Instructions for Submitting Comments

A formal comment period is open through **8 p.m. Eastern on Wednesday, March 28, 2012.**

Please use this electronic comment form to submit comments. If you experience any difficulties in using the electronic form, please contact Monica Benson at monica.benson@nerc.net.

Next Steps

A successive ballot of PRC-005-2 and the associated implementation plan, and a non-binding poll of VRFs and VSLs will begin on March 19, 2012 and will end on March 28, 2012 at 8 p.m. Eastern.

Project Background

The proposed PRC-005-2 – Protection System Maintenance standard addresses FERC directives from FERC Order 693, as well as issues identified by stakeholders. In accordance with the FERC directives, this draft standard establishes requirements for a time-based maintenance program, where all relevant devices are maintained according to prescribed maximum intervals. It further establishes requirements for a condition-based maintenance program, where the hands-on maintenance intervals are adjusted to reflect the known and reported condition of the relevant devices. For a performance-based maintenance program, it ascertains where the hands-on maintenance intervals are adjusted to reflect the historical performance of the relevant devices.

Standards Development Process

The Standard Processes Manual contains all the procedures governing the standards development process. The success of the NERC standards development process depends on stakeholder participation. We extend our thanks to all those who participate. For more information or assistance, please contact Monica Benson at monica.benson@nerc.net.

For more information or assistance, please contact Monica Benson, Standards Process Administrator, at monica.benson@nerc.net or at 404-446-2560.

North American Electric Reliability Corporation
116-390 Village Blvd.
Princeton, NJ 08540
609.452.8060 | www.nerc.com

NERC
NORTH AMERICAN ELECTRIC RELIABILITY CORPORATION

Newsroom • Site Map • Contact NERC

SEARCH NERC.com

Advanced Search GO

About NERC | Standards | Compliance | Assessments & Trends | Events Analysis | Programs

User Name

Password

Log in

Register

-Ballot Pools
-Current Ballots
-Ballot Results
-Registered Ballot Body
-Proxy Voters

Home Page

Ballot Results

Ballot Name:	Project 2007-17 PSMT Successive Ballot March 2012_in
Ballot Period:	3/19/2012 - 3/28/2012
Ballot Type:	Initial
Total # Votes:	312
Total Ballot Pool:	370
Quorum:	**84.32 % The Quorum has been reached**
Weighted Segment Vote:	73.93 %
Ballot Results:	**The drafting team will consider comments.**

Summary of Ballot Results

Segment	Ballot Pool	Segment Weight	Affirmative # Votes	Affirmative Fraction	Negative # Votes	Negative Fraction	Abstain # Votes	No Vote
1 - Segment 1.	90	1	58	0.795	15	0.205	5	12
2 - Segment 2.	6	0.4	4	0.4	0	0	1	1
3 - Segment 3.	98	1	54	0.72	21	0.28	7	16
4 - Segment 4.	30	1	15	0.625	9	0.375	2	4
5 - Segment 5.	80	1	36	0.632	21	0.368	8	15
6 - Segment 6.	47	1	26	0.703	11	0.297	3	7
7 - Segment 7.	0	0	0	0	0	0	0	0
8 - Segment 8.	11	0.8	7	0.7	1	0.1	0	3
9 - Segment 9.	2	0.2	2	0.2	0	0	0	0
10 - Segment 10.	6	0.6	4	0.4	2	0.2	0	0
Totals	**370**	**7**	**206**	**5.175**	**80**	**1.825**	**26**	**58**

Individual Ballot Pool Results

Segment	Organization	Member	Ballot	Comments
1	Ameren Services	Kirit Shah	Affirmative	View
1	American Electric Power	Paul B. Johnson	Affirmative	View
1	American Transmission Company, LLC	Andrew Z Pusztai	Negative	View
1	Arizona Public Service Co.	Robert Smith	Negative	
1	Associated Electric Cooperative, Inc.	John Bussman	Affirmative	
1	Austin Energy	James Armke	Abstain	
1	Balancing Authority of Northern California	Kevin Smith	Affirmative	
1	Baltimore Gas & Electric Company	Gregory S Miller	Negative	View

1	BC Hydro and Power Authority	Patricia Robertson	Abstain	
1	Beaches Energy Services	Joseph S Stonecipher	Negative	View
1	Black Hills Corp	Eric Egge	Affirmative	
1	Bonneville Power Administration	Donald S. Watkins	Affirmative	
1	Brazos Electric Power Cooperative, Inc.	Tony Kroskey	Affirmative	
1	CenterPoint Energy Houston Electric	Dale Bodden		
1	Central Maine Power Company	Kevin L Howes	Affirmative	
1	City of Tacoma, Department of Public Utilities, Light Division, dba Tacoma Power	Chang G Choi	Affirmative	
1	City Utilities of Springfield, Missouri	Jeff Knottek		
1	Cleco Power LLC	Danny McDaniel	Affirmative	
1	Colorado Springs Utilities	Paul Morland	Affirmative	
1	Consolidated Edison Co. of New York	Christopher L de Graffenried	Affirmative	
1	Consumers Power Inc.	Stuart Sloan	Affirmative	View
1	CPS Energy	Richard Castrejana	Affirmative	
1	Dairyland Power Coop.	Robert W. Roddy	Negative	View
1	Dayton Power & Light Co.	Hertzel Shamash		
1	Dominion Virginia Power	Michael S Crowley	Affirmative	
1	Entergy Services, Inc.	Edward J Davis	Affirmative	
1	FirstEnergy Corp.	William J Smith	Affirmative	View
1	Florida Keys Electric Cooperative Assoc.	Dennis Minton	Negative	
1	Gainesville Regional Utilities	Luther E. Fair	Negative	View
1	Georgia Transmission Corporation	Harold Taylor	Affirmative	
1	Great River Energy	Gordon Pietsch	Affirmative	View
1	Hoosier Energy Rural Electric Cooperative, Inc.	Bob Solomon	Affirmative	
1	Hydro One Networks, Inc.	Ajay Garg	Affirmative	
1	Hydro-Quebec TransEnergie	Bernard Pelletier	Affirmative	
1	Idaho Power Company	Ronald D. Schellberg	Affirmative	
1	Imperial Irrigation District	Tino Zaragoza	Negative	
1	International Transmission Company Holdings Corp	Michael Moltane	Affirmative	
1	Kansas City Power & Light Co.	Michael Gammon	Affirmative	
1	Lee County Electric Cooperative	John W Delucca	Negative	
1	Lincoln Electric System	Doug Bantam		
1	Long Island Power Authority	Robert Ganley		
1	Los Angeles Department of Water & Power	Ly M Le		
1	Lower Colorado River Authority	Martyn Turner	Affirmative	
1	Manitoba Hydro	Joe D Petaski	Negative	View
1	MEAG Power	Danny Dees	Affirmative	
1	MidAmerican Energy Co.	Terry Harbour	Affirmative	View
1	Minnkota Power Coop. Inc.	Richard Burt	Negative	
1	Muscatine Power & Water	Tim Reed	Affirmative	View
1	N.W. Electric Power Cooperative, Inc.	Mark Ramsey	Affirmative	
1	Nebraska Public Power District	Cole C Brodine	Negative	View
1	New Brunswick Power Transmission Corporation	Randy MacDonald		
1	Northeast Missouri Electric Power Cooperative	Kevin White	Affirmative	
1	Northeast Utilities	David Boguslawski	Affirmative	
1	Northern Indiana Public Service Co.	Kevin M Largura		
1	NorthWestern Energy	John Canavan	Affirmative	
1	Ohio Valley Electric Corp.	Robert Mattey	Affirmative	
1	Omaha Public Power District	Doug Peterchuck	Affirmative	View
1	Oncor Electric Delivery	Brenda Pulis	Affirmative	View
1	Orlando Utilities Commission	Brad Chase		
1	Otter Tail Power Company	Daryl Hanson	Affirmative	
1	PacifiCorp	Colt Norrish		
1	PECO Energy	Ronald Schloendorn	Abstain	
1	Platte River Power Authority	John C. Collins	Affirmative	
1	Portland General Electric Co.	John T Walker		
1	Potomac Electric Power Co.	David Thorne	Affirmative	
1	PPL Electric Utilities Corp.	Brenda L Truhe	Affirmative	
1	Progress Energy Carolinas	Brett A Koelsch	Affirmative	View
1	Public Service Company of New Mexico	Laurie Williams	Affirmative	
1	Public Service Electric and Gas Co.	Kenneth D. Brown	Affirmative	
1	Public Utility District No. 1 of Okanogan County	Dale Dunckel	Affirmative	View
1	Puget Sound Energy, Inc.	Denise M Lietz	Abstain	

1	Rochester Gas and Electric Corp.	John C. Allen	Affirmative	
1	Sacramento Municipal Utility District	Tim Kelley	Affirmative	
1	Salt River Project	Robert Kondziolka	Affirmative	
1	Santee Cooper	Terry L Blackwell	Affirmative	
1	Seattle City Light	Pawel Krupa	Negative	
1	Sho-Me Power Electric Cooperative	Denise Stevens	Abstain	
1	Sierra Pacific Power Co.	Rich Salgo	Affirmative	
1	Snohomish County PUD No. 1	Long T Duong	Affirmative	
1	South California Edison Company	Steven Mavis	Affirmative	
1	Southern Company Services, Inc.	Robert A. Schaffeld	Affirmative	
1	Southwest Transmission Cooperative, Inc.	James Jones	Affirmative	View
1	Sunflower Electric Power Corporation	Noman Lee Williams		
1	Tennessee Valley Authority	Larry Akens	Negative	View
1	Tri-State G & T Association, Inc.	Tracy Sliman	Affirmative	
1	United Illuminating Co.	Jonathan Appelbaum	Affirmative	
1	Westar Energy	Allen Klassen	Affirmative	
1	Western Area Power Administration	Brandy A Dunn	Negative	View
1	Western Farmers Electric Coop.	Forrest Brock	Affirmative	
1	Xcel Energy, Inc.	Gregory L Pieper	Affirmative	
2	Alberta Electric System Operator	Mark B Thompson	Affirmative	
2	BC Hydro	Venkataramakrishnan Vinnakota	Abstain	
2	Independent Electricity System Operator	Barbara Constantinescu	Affirmative	
2	Midwest ISO, Inc.	Marie Knox	Affirmative	View
2	New Brunswick System Operator	Alden Briggs	Affirmative	
2	PJM Interconnection, L.L.C.	Tom Bowe		
3	AEP	Michael E Deloach	Affirmative	View
3	Alabama Power Company	Richard J. Mandes	Affirmative	
3	Ameren Services	Mark Peters	Affirmative	
3	APS	Steven Norris	Negative	
3	Arkansas Electric Cooperative Corporation	Philip Huff	Abstain	
3	Atlantic City Electric Company	NICOLE BUCKMAN	Affirmative	
3	BC Hydro and Power Authority	Pat G. Harrington	Abstain	
3	Blachly-Lane Electric Co-op	Bud Tracy	Affirmative	View
3	Bonneville Power Administration	Rebecca Berdahl	Affirmative	View
3	Central Electric Cooperative, Inc. (Redmond, Oregon)	Dave Markham	Affirmative	View
3	Central Electric Power Cooperative	Ralph J Schulte		
3	Central Lincoln PUD	Steve Alexanderson	Affirmative	View
3	City of Austin dba Austin Energy	Andrew Gallo	Affirmative	
3	City of Clewiston	Lynne Mila	Negative	
3	City of Farmington	Linda R Jacobson	Affirmative	
3	City of Garland	Ronnie C Hoeinghaus	Abstain	
3	City of Green Cove Springs	Gregg R Griffin	Abstain	
3	City of Redding	Bill Hughes	Affirmative	
3	Clearwater Power Co.	Dave Hagen	Affirmative	View
3	Cleco Corporation	Michelle A Corley		
3	Colorado Springs Utilities	Lisa Cleary		
3	ComEd	Bruce Krawczyk	Abstain	
3	Consolidated Edison Co. of New York	Peter T Yost	Affirmative	
3	Constellation Energy	CJ Ingersoll	Negative	View
3	Consumers Energy	Richard Blumenstock	Affirmative	
3	Consumers Power Inc.	Roman Gillen	Affirmative	View
3	Coos-Curry Electric Cooperative, Inc	Roger Meader	Affirmative	View
3	Cowlitz County PUD	Russell A Noble	Affirmative	
3	CPS Energy	Jose Escamilla	Affirmative	
3	Delmarva Power & Light Co.	Michael R. Mayer	Affirmative	
3	Dominion Resources Services	Michael F. Gildea	Affirmative	
3	Douglas Electric Cooperative	Dave Sabala		
3	Duke Energy Carolina	Henry Ernst-Jr	Negative	
3	Fall River Rural Electric Cooperative	Bryan Case	Affirmative	View
3	FirstEnergy Energy Delivery	Stephan Kern	Affirmative	View
3	Flathead Electric Cooperative	John M Goroski	Negative	
3	Florida Municipal Power Agency	Joe McKinney	Negative	View
3	Florida Power Corporation	Lee Schuster	Affirmative	View
3	Gainesville Regional Utilities	Kenneth Simmons	Negative	
3	Georgia Power Company	Anthony L Wilson	Affirmative	

3	Georgia Systems Operations Corporation	William N. Phinney		
3	Great River Energy	Sam Kokkinen	Affirmative	View
3	Gulf Power Company	Paul C Caldwell	Affirmative	
3	Hydro One Networks, Inc.	David Kiguel	Affirmative	
3	Imperial Irrigation District	Jesus S. Alcaraz	Negative	View
3	JEA	Garry Baker	Negative	View
3	Kansas City Power & Light Co.	Charles Locke	Affirmative	
3	Kissimmee Utility Authority	Gregory D Woessner	Negative	View
3	Lakeland Electric	Mace D Hunter		
3	Lane Electric Cooperative, Inc.	Rick Crinklaw	Affirmative	View
3	Lincoln Electric Cooperative, Inc.	Michael Henry		
3	Lincoln Electric System	Jason Fortik	Negative	View
3	Lost River Electric Cooperative	Richard Reynolds		
3	Louisville Gas and Electric Co.	Charles A. Freibert	Affirmative	
3	M & A Electric Power Cooperative	Stephen D Pogue	Affirmative	
3	Manitoba Hydro	Greg C. Parent	Negative	View
3	Manitowoc Public Utilities	Thomas E Reed	Negative	
3	MidAmerican Energy Co.	Thomas C. Mielnik	Affirmative	View
3	Mississippi Power	Jeff Franklin	Affirmative	
3	Modesto Irrigation District	Jack W Savage		
3	Municipal Electric Authority of Georgia	Steven M. Jackson	Affirmative	
3	Muscatine Power & Water	John S Bos	Affirmative	View
3	Nebraska Public Power District	Tony Eddleman	Negative	View
3	New York Power Authority	Marilyn Brown	Affirmative	
3	Niagara Mohawk (National Grid Company)	Michael Schiavone	Affirmative	
3	Northeast Missouri Electric Power Cooperative	Skyler Wiegmann	Affirmative	
3	Northern Indiana Public Service Co.	William SeDoris	Negative	View
3	Northern Lights Inc.	Jon Shelby	Affirmative	View
3	Okanogan County Electric Cooperative, Inc.	Ray Ellis		
3	Orange and Rockland Utilities, Inc.	David Burke	Affirmative	
3	Orlando Utilities Commission	Ballard K Mutters	Affirmative	
3	Owensboro Municipal Utilities	Thomas T Lyons	Negative	
3	Pacific Gas and Electric Company	John H Hagen	Negative	View
3	Platte River Power Authority	Terry L Baker	Affirmative	
3	Potomac Electric Power Co.	Robert Reuter		
3	Progress Energy Carolinas	Sam Waters	Affirmative	
3	Public Service Electric and Gas Co.	Jeffrey Mueller	Affirmative	
3	Public Utility District No. 1 of Clallam County	David Proebstel	Affirmative	
3	Public Utility District No. 2 of Grant County	Greg Lange		
3	Puget Sound Energy, Inc.	Erin Apperson		
3	Raft River Rural Electric Cooperative	Heber Carpenter	Affirmative	View
3	Rayburn Country Electric Coop., Inc.	Eddy Reece		
3	Rutherford EMC	Thomas M Haire	Affirmative	
3	Sacramento Municipal Utility District	James Leigh-Kendall	Affirmative	
3	Salmon River Electric Cooperative	Ken Dizes	Affirmative	
3	Salt River Project	John T. Underhill		
3	Santee Cooper	James M Poston	Affirmative	
3	Seattle City Light	Dana Wheelock	Negative	
3	Seminole Electric Cooperative, Inc.	James R Frauen	Negative	View
3	South Carolina Electric & Gas Co.	Hubert C Young	Abstain	
3	South Mississippi Electric Power Association	Gary Hutson		
3	Tacoma Public Utilities	Travis Metcalfe	Affirmative	
3	Tampa Electric Co.	Ronald L Donahey	Negative	View
3	Tennessee Valley Authority	Ian S Grant	Negative	
3	Umatilla Electric Cooperative	Steve Eldrige	Affirmative	View
3	West Oregon Electric Cooperative, Inc.	Marc M Farmer	Affirmative	View
3	Wisconsin Electric Power Marketing	James R Keller	Affirmative	
3	Xcel Energy, Inc.	Michael Ibold	Abstain	
4	Alliant Energy Corp. Services, Inc.	Kenneth Goldsmith	Affirmative	
4	American Public Power Association	Allen Mosher	Abstain	
4	Central Lincoln PUD	Shamus J Gamache	Affirmative	View
4	City of Austin dba Austin Energy	Reza Ebrahimian		
4	City of Clewiston	Kevin McCarthy	Negative	
4	City of New Smyrna Beach Utilities Commission	Tim Beyrle	Negative	
4	City of Redding	Nicholas Zettel	Affirmative	
4	City Utilities of Springfield, Missouri	John Allen	Affirmative	

4	Consumers Energy	David Frank Ronk	Affirmative	
4	Cowlitz County PUD	Rick Syring	Affirmative	
4	Flathead Electric Cooperative	Russ Schneider	Negative	
4	Florida Municipal Power Agency	Frank Gaffney	Negative	View
4	Fort Pierce Utilities Authority	Thomas Richards	Negative	View
4	Georgia System Operations Corporation	Guy Andrews	Affirmative	
4	Illinois Municipal Electric Agency	Bob C. Thomas	Negative	View
4	Imperial Irrigation District	Diana U Torres	Negative	View
4	Indiana Municipal Power Agency	Jack Alvey	Abstain	
4	Madison Gas and Electric Co.	Joseph DePoorter	Affirmative	View
4	Modesto Irrigation District	Spencer Tacke		
4	Northern California Power Agency	Tracy R Bibb		
4	Ohio Edison Company	Douglas Hohlbaugh	Affirmative	View
4	Pacific Northwest Generating Cooperative	Aleka K Scott	Affirmative	View
4	Public Utility District No. 1 of Douglas County	Henry E. LuBean	Affirmative	
4	Public Utility District No. 1 of Snohomish County	John D Martinsen	Affirmative	
4	Sacramento Municipal Utility District	Mike Ramirez	Affirmative	
4	Seattle City Light	Hao Li	Negative	
4	Seminole Electric Cooperative, Inc.	Steven R Wallace	Negative	View
4	South Mississippi Electric Power Association	Steven McElhaney		
4	Tacoma Public Utilities	Keith Morisette	Affirmative	
4	Wisconsin Energy Corp.	Anthony Jankowski	Affirmative	
5	AEP Service Corp.	Brock Ondayko		
5	AES Corporation	Leo Bernier	Affirmative	
5	Amerenue	Sam Dwyer	Affirmative	
5	Arizona Public Service Co.	Edward Cambridge	Negative	
5	BC Hydro and Power Authority	Clement Ma	Abstain	
5	Boise-Kuna Irrigation District/dba Lucky peak power plant project	Mike D Kukla	Negative	
5	Bonneville Power Administration	Francis J. Halpin	Affirmative	View
5	City and County of San Francisco	Daniel Mason	Abstain	
5	City of Austin dba Austin Energy	Jeanie Doty	Affirmative	
5	City of Grand Island	Jeff Mead	Abstain	
5	City of Redding	Paul Cummings	Affirmative	
5	City of Tacoma, Department of Public Utilities, Light Division, dba Tacoma Power	Max Emrick		
5	Cleco Power	Stephanie Huffman		
5	Cogentrix Energy, Inc.	Mike D Hirst	Affirmative	
5	Colorado Springs Utilities	Jennifer Eckels	Affirmative	
5	Consolidated Edison Co. of New York	Wilket (Jack) Ng	Affirmative	
5	Constellation Power Source Generation, Inc.	Amir Y Hammad	Negative	View
5	Cowlitz County PUD	Bob Essex	Affirmative	
5	CPS Energy	Robert Stevens		
5	Detroit Edison Company	Christy Wicke	Negative	
5	Dominion Resources, Inc.	Mike Garton	Affirmative	
5	Duke Energy	Dale Q Goodwine	Negative	View
5	Dynegy Inc.	Dan Roethemeyer	Affirmative	
5	East Kentucky Power Coop.	Stephen Ricker	Affirmative	
5	Exelon Nuclear	Michael Korchynsky	Abstain	
5	ExxonMobil Research and Engineering	Martin Kaufman	Negative	
5	FirstEnergy Solutions	Kenneth Dresner	Affirmative	View
5	Florida Municipal Power Agency	David Schumann	Negative	View
5	Great River Energy	Preston L Walsh	Affirmative	View
5	Green Country Energy	Greg Froehling		
5	Imperial Irrigation District	Marcela Y Caballero	Negative	
5	Invenergy LLC	Alan Beckham		
5	JEA	John J Babik		
5	Kissimmee Utility Authority	Mike Blough	Negative	
5	Lakeland Electric	James M Howard		
5	Liberty Electric Power LLC	Daniel Duff	Affirmative	
5	Lincoln Electric System	Dennis Florom	Negative	View
5	Los Angeles Department of Water & Power	Kenneth Silver	Affirmative	
5	Lower Colorado River Authority	Tom Foreman	Affirmative	
5	Luminant Generation Company LLC	Mike Laney	Affirmative	View
5	Manitoba Hydro	S N Fernando	Negative	View
5	Massachusetts Municipal Wholesale Electric Company	David Gordon	Abstain	

5	MEAG Power	Steven Grego	Affirmative	
5	MidAmerican Energy Co.	Christopher Schneider	Affirmative	View
5	Muscatine Power & Water	Mike Avesing	Affirmative	View
5	Nebraska Public Power District	Don Schmit	Negative	View
5	New Harquahala Generating Co. LLC	Nathaniel Larson		
5	New York Power Authority	Gerald Mannarino	Affirmative	
5	North Carolina Electric Membership Corp.	Jeffrey S Brame	Affirmative	View
5	Northern Indiana Public Service Co.	William O. Thompson	Negative	
5	Occidental Chemical	Michelle R DAntuono	Negative	View
5	Oklahoma Gas and Electric Co.	Kim Morphis		
5	Omaha Public Power District	Mahmood Z. Safi	Affirmative	View
5	Orlando Utilities Commission	Richard Kinas		
5	Pacific Gas and Electric Company	Richard J. Padilla	Negative	View
5	PacifiCorp	Sandra L. Shaffer	Affirmative	
5	Platte River Power Authority	Roland Thiel	Affirmative	
5	Portland General Electric Co.	Gary L Tingley		
5	PPL Generation LLC	Annette M Bannon	Affirmative	
5	Progress Energy Carolinas	Wayne Lewis	Affirmative	
5	Proven Compliance Solutions	Mitchell E Needham	Abstain	
5	PSEG Fossil LLC	Mikhail Falkovich	Affirmative	
5	Puget Sound Energy, Inc.	Tom Flynn	Abstain	
5	Sacramento Municipal Utility District	Bethany Hunter	Affirmative	
5	Salt River Project	Glen Reeves	Affirmative	
5	Santee Cooper	Lewis P Pierce	Affirmative	
5	Seattle City Light	Michael J. Haynes	Negative	
5	Seminole Electric Cooperative, Inc.	Brenda K. Atkins	Negative	View
5	Snohomish County PUD No. 1	Sam Nietfeld	Affirmative	
5	South Mississippi Electric Power Association	Jerry W Johnson		
5	Southern Company Generation	William D Shultz	Affirmative	View
5	Tampa Electric Co.	RJames Rocha	Negative	
5	Tenaska, Inc.	Scott M. Helyer	Abstain	
5	Tennessee Valley Authority	David Thompson	Negative	View
5	Tri-State G & T Association, Inc.	Barry Ingold		
5	U.S. Army Corps of Engineers	Melissa Kurtz	Negative	View
5	U.S. Bureau of Reclamation	Martin Bauer	Negative	View
5	Westar Energy	Bo Jones		
5	Western Farmers Electric Coop.	Caleb J Muckala	Affirmative	
5	Wisconsin Electric Power Co.	Linda Horn	Affirmative	
6	AEP Marketing	Edward P. Cox	Affirmative	View
6	APS	RANDY A YOUNG	Negative	
6	Associated Electric Cooperative, Inc.	Brian Ackermann		
6	Bonneville Power Administration	Brenda S. Anderson	Affirmative	View
6	City of Austin dba Austin Energy	Lisa L Martin	Affirmative	
6	City of Redding	Marvin Briggs	Affirmative	
6	Cleco Power LLC	Robert Hirchak	Affirmative	
6	Colorado Springs Utilities	Lisa C Rosintoski		
6	Consolidated Edison Co. of New York	Nickesha P Carrol	Affirmative	
6	Constellation Energy Commodities Group	Brenda L Powell	Negative	View
6	Dominion Resources, Inc.	Louis S. Slade	Affirmative	
6	Duke Energy Carolina	Walter Yeager		
6	Exelon Power Team	Pulin Shah	Abstain	
6	FirstEnergy Solutions	Kevin Querry	Affirmative	View
6	Florida Municipal Power Agency	Richard L. Montgomery	Negative	View
6	Florida Municipal Power Pool	Thomas Washburn	Affirmative	
6	Florida Power & Light Co.	Silvia P. Mitchell	Abstain	
6	Great River Energy	Donna Stephenson	Affirmative	View
6	Imperial Irrigation District	Cathy Bretz	Negative	
6	Kansas City Power & Light Co.	Jessica L Klinghoffer	Affirmative	
6	Lakeland Electric	Paul Shipps	Negative	View
6	Lincoln Electric System	Eric Ruskamp	Negative	View
6	Manitoba Hydro	Daniel Prowse	Negative	View
6	MidAmerican Energy Co.	Dennis Kimm	Affirmative	View
6	Muscatine Power & Water	John Stolley	Affirmative	
6	New York Power Authority	William Palazzo	Affirmative	
6	Northern Indiana Public Service Co.	Joseph O'Brien	Negative	View
6	NRG Energy, Inc.	Alan Johnson	Abstain	
6	Omaha Public Power District	David Ried	Affirmative	

6	PacifiCorp	Scott L Smith	Affirmative	
6	Platte River Power Authority	Carol Ballantine	Affirmative	
6	PPL EnergyPlus LLC	Mark A Heimbach	Affirmative	
6	Progress Energy	John T Sturgeon	Affirmative	View
6	PSEG Energy Resources & Trade LLC	Peter Dolan	Affirmative	
6	Public Utility District No. 1 of Chelan County	Hugh A. Owen		
6	Sacramento Municipal Utility District	Claire Warshaw	Affirmative	
6	Salt River Project	Steven J Hulet	Affirmative	
6	Santee Cooper	Michael Brown	Affirmative	
6	Seattle City Light	Dennis Sismaet	Negative	
6	Seminole Electric Cooperative, Inc.	Trudy S. Novak	Negative	View
6	Snohomish County PUD No. 1	William T Moojen	Affirmative	
6	South California Edison Company	Lujuanna Medina		
6	Southern Company Generation and Energy Marketing	John J. Ciza	Affirmative	
6	Tacoma Public Utilities	Michael C Hill	Affirmative	
6	Tampa Electric Co.	Benjamin F Smith II		
6	Tennessee Valley Authority	Marjorie S. Parsons	Negative	View
6	Xcel Energy, Inc.	David F. Lemmons		
8		Edward C Stein		
8		Merle Ashton	Affirmative	
8		James A Maenner	Negative	View
8		Roger C Zaklukiewicz	Affirmative	
8		Kristina M. Loudermilk	Affirmative	
8	INTELLIBIND	Kevin Conway		
8	JDRJC Associates	Jim Cyrulewski	Affirmative	
8	Pacific Northwest Generating Cooperative	Margaret Ryan	Affirmative	View
8	Transmission Strategies, LLC	Bernie M Pasternack		
8	Utility Services, Inc.	Brian Evans-Mongeon	Affirmative	
8	Volkmann Consulting, Inc.	Terry Volkmann	Affirmative	
9	Commonwealth of Massachusetts Department of Public Utilities	Donald Nelson	Affirmative	
9	National Association of Regulatory Utility Commissioners	Diane J Barney	Affirmative	
10	New York State Reliability Council	Alan Adamson	Affirmative	
10	Northeast Power Coordinating Council	Guy V. Zito	Affirmative	
10	ReliabilityFirst Corporation	Anthony E Jablonski	Negative	View
10	SERC Reliability Corporation	Carter B. Edge	Negative	View
10	Texas Reliability Entity, Inc.	Donald G Jones	Affirmative	View
10	Western Electricity Coordinating Council	Steven L. Rueckert	Affirmative	

Legal and Privacy : 609.452.8060 voice : 609.452.9550 fax : 116-390 Village Boulevard : Princeton, NJ 08540-5721
Washington Office: 1120 G Street, N.W. : Suite 990 : Washington, DC 20005-3801

Account Log-In/Register

Copyright © 2010 by the North American Electric Reliability Corporation. : All rights reserved.
A New Jersey Nonprofit Corporation

Non-binding Poll Results

Project 2007-17 - PRC-005

Ballot Results	
Non-binding Poll Name:	Project 2007-17 PSMT Non-binding Poll
Poll Period:	3/19/2012 - 3/28/2012
Total # Opinions:	272
Total Ballot Pool:	332
Summary Results:	81.93% of those who registered to participate provided an opinion or an abstention; 66.12% of those who provided an opinion indicated support for the VRFs and VSLs.

Individual Ballot Pool Results

Segment	Organization	Member	Ballot	Comments
1	Ameren Services	Kirit Shah	Negative	View
1	American Electric Power	Paul B. Johnson	Abstain	View
1	American Transmission Company, LLC	Andrew Z Pusztai	Abstain	
1	Arizona Public Service Co.	Robert Smith	Negative	
1	Associated Electric Cooperative, Inc.	John Bussman	Affirmative	
1	Austin Energy	James Armke	Abstain	
1	Balancing Authority of Northern California	Kevin Smith	Abstain	
1	Baltimore Gas & Electric Company	Gregory S Miller	Abstain	
1	BC Hydro and Power Authority	Patricia Robertson	Abstain	
1	Beaches Energy Services	Joseph S Stonecipher	Negative	View
1	Bonneville Power Administration	Donald S. Watkins	Affirmative	
1	Brazos Electric Power Cooperative, Inc.	Tony Kroskey	Abstain	
1	CenterPoint Energy Houston Electric	Dale Bodden		
1	Central Maine Power Company	Kevin L Howes		
1	City of Tacoma, Department of Public Utilities, Light Division, dba Tacoma Power	Chang G Choi	Affirmative	
1	Cleco Power LLC	Danny McDaniel		
1	Colorado Springs Utilities	Paul Morland	Affirmative	
1	Consolidated Edison Co. of New York	Christopher L de Graffenried	Abstain	
1	CPS Energy	Richard Castrejana	Affirmative	
1	Dairyland Power Coop.	Robert W. Roddy	Negative	View
1	Dayton Power & Light Co.	Hertzel Shamash		
1	Dominion Virginia Power	Michael S Crowley	Abstain	
1	Entergy Services, Inc.	Edward J Davis	Affirmative	View
1	FirstEnergy Corp.	William J Smith	Affirmative	View
1	Florida Keys Electric Cooperative Assoc.	Dennis Minton	Negative	
1	Gainesville Regional Utilities	Luther E. Fair	Negative	View
1	Georgia Transmission Corporation	Harold Taylor	Affirmative	
1	Great River Energy	Gordon Pietsch	Affirmative	View

1	Hoosier Energy Rural Electric Cooperative, Inc.	Bob Solomon	Affirmative	
1	Hydro One Networks, Inc.	Ajay Garg	Abstain	
1	Hydro-Quebec TransEnergie	Bernard Pelletier	Affirmative	
1	Idaho Power Company	Ronald D. Schellberg	Affirmative	
1	Imperial Irrigation District	Tino Zaragoza	Negative	
1	International Transmission Company Holdings Corp	Michael Moltane	Abstain	
1	Kansas City Power & Light Co.	Michael Gammon	Affirmative	
1	Lee County Electric Cooperative	John W Delucca	Negative	
1	Lincoln Electric System	Doug Bantam		
1	Long Island Power Authority	Robert Ganley		
1	Los Angeles Department of Water & Power	Ly M Le		
1	Lower Colorado River Authority	Martyn Turner	Affirmative	
1	Manitoba Hydro	Joe D Petaski	Affirmative	
1	MEAG Power	Danny Dees	Affirmative	
1	MidAmerican Energy Co.	Terry Harbour	Abstain	
1	Minnkota Power Coop. Inc.	Richard Burt	Negative	
1	N.W. Electric Power Cooperative, Inc.	Mark Ramsey	Affirmative	
1	Nebraska Public Power District	Cole C Brodine	Negative	View
1	New Brunswick Power Transmission Corporation	Randy MacDonald		
1	Northeast Utilities	David Boguslawski	Abstain	
1	Northern Indiana Public Service Co.	Kevin M Largura		
1	NorthWestern Energy	John Canavan	Affirmative	
1	Ohio Valley Electric Corp.	Robert Mattey	Abstain	
1	Omaha Public Power District	Doug Peterchuck	Affirmative	View
1	Oncor Electric Delivery	Brenda Pulis	Affirmative	View
1	Orlando Utilities Commission	Brad Chase		
1	Otter Tail Power Company	Daryl Hanson	Affirmative	
1	PacifiCorp	Colt Norrish		
1	PECO Energy	Ronald Schloendorn	Abstain	
1	Platte River Power Authority	John C. Collins	Affirmative	
1	Portland General Electric Co.	John T Walker		
1	Potomac Electric Power Co.	David Thorne	Abstain	
1	PPL Electric Utilities Corp.	Brenda L Truhe	Abstain	
1	Public Service Company of New Mexico	Laurie Williams	Affirmative	
1	Public Service Electric and Gas Co.	Kenneth D. Brown	Abstain	
1	Public Utility District No. 1 of Okanogan County	Dale Dunckel	Affirmative	
1	Puget Sound Energy, Inc.	Denise M Lietz	Abstain	
1	Rochester Gas and Electric Corp.	John C. Allen	Affirmative	
1	Sacramento Municipal Utility District	Tim Kelley	Abstain	
1	Salt River Project	Robert Kondziolka	Affirmative	
1	Santee Cooper	Terry L Blackwell	Affirmative	
1	Seattle City Light	Pawel Krupa	Negative	
1	Sho-Me Power Electric Cooperative	Denise Stevens	Abstain	
1	Sierra Pacific Power Co.	Rich Salgo	Abstain	
1	Snohomish County PUD No. 1	Long T Duong	Affirmative	

1	South California Edison Company	Steven Mavis	Affirmative	
1	Southern Company Services, Inc.	Robert A. Schaffeld	Affirmative	
1	Southwest Transmission Cooperative, Inc.	James Jones	Negative	View
1	Sunflower Electric Power Corporation	Noman Lee Williams		
1	Tennessee Valley Authority	Larry Akens	Abstain	
1	Tri-State G & T Association, Inc.	Tracy Sliman	Affirmative	
1	United Illuminating Co.	Jonathan Appelbaum	Abstain	
1	Westar Energy	Allen Klassen	Affirmative	
1	Western Area Power Administration	Brandy A Dunn	Negative	View
1	Western Farmers Electric Coop.	Forrest Brock	Affirmative	
2	Alberta Electric System Operator	Mark B Thompson	Abstain	
2	BC Hydro	Venkataramakrishnan Vinnakota	Abstain	
2	Independent Electricity System Operator	Barbara Constantinescu	Negative	View
2	Midwest ISO, Inc.	Marie Knox	Negative	View
2	New Brunswick System Operator	Alden Briggs	Abstain	
2	PJM Interconnection, L.L.C.	Tom Bowe		
3	AEP	Michael E Deloach	Abstain	View
3	Alabama Power Company	Richard J. Mandes	Affirmative	
3	Ameren Services	Mark Peters	Negative	
3	APS	Steven Norris	Negative	
3	Arkansas Electric Cooperative Corporation	Philip Huff	Abstain	
3	Atlantic City Electric Company	NICOLE BUCKMAN	Abstain	
3	BC Hydro and Power Authority	Pat G. Harrington	Abstain	
3	Bonneville Power Administration	Rebecca Berdahl	Affirmative	
3	Central Electric Power Cooperative	Ralph J Schulte		
3	Central Lincoln PUD	Steve Alexanderson	Negative	View
3	City of Austin dba Austin Energy	Andrew Gallo	Affirmative	
3	City of Clewiston	Lynne Mila	Negative	
3	City of Farmington	Linda R Jacobson	Affirmative	
3	City of Garland	Ronnie C Hoeinghaus	Abstain	
3	City of Green Cove Springs	Gregg R Griffin	Abstain	
3	City of Redding	Bill Hughes	Affirmative	
3	Cleco Corporation	Michelle A Corley		
3	Colorado Springs Utilities	Lisa Cleary		
3	ComEd	Bruce Krawczyk	Abstain	
3	Consolidated Edison Co. of New York	Peter T Yost	Abstain	
3	Constellation Energy	CJ Ingersoll	Abstain	
3	Consumers Energy	Richard Blumenstock	Affirmative	
3	Cowlitz County PUD	Russell A Noble	Affirmative	
3	CPS Energy	Jose Escamilla	Affirmative	
3	Duke Energy Carolina	Henry Ernst-Jr	Negative	
3	FirstEnergy Energy Delivery	Stephan Kern	Affirmative	View
3	Flathead Electric Cooperative	John M Goroski	Negative	
3	Florida Municipal Power Agency	Joe McKinney	Negative	View
3	Florida Power Corporation	Lee Schuster	Abstain	

3	Gainesville Regional Utilities	Kenneth Simmons	Negative	
3	Georgia Power Company	Anthony L Wilson	Affirmative	View
3	Georgia Systems Operations Corporation	William N. Phinney		
3	Great River Energy	Sam Kokkinen	Affirmative	View
3	Gulf Power Company	Paul C Caldwell	Affirmative	
3	Hydro One Networks, Inc.	David Kiguel	Abstain	
3	Imperial Irrigation District	Jesus S. Alcaraz	Negative	View
3	JEA	Garry Baker		
3	Kansas City Power & Light Co.	Charles Locke	Affirmative	
3	Kissimmee Utility Authority	Gregory D Woessner	Negative	
3	Lakeland Electric	Mace D Hunter		
3	Louisville Gas and Electric Co.	Charles A. Freibert		
3	Manitoba Hydro	Greg C. Parent	Affirmative	
3	Manitowoc Public Utilities	Thomas E Reed	Negative	
3	MidAmerican Energy Co.	Thomas C. Mielnik	Abstain	
3	Mississippi Power	Jeff Franklin	Affirmative	
3	Modesto Irrigation District	Jack W Savage		
3	Municipal Electric Authority of Georgia	Steven M. Jackson	Affirmative	
3	Muscatine Power & Water	John S Bos	Affirmative	View
3	Nebraska Public Power District	Tony Eddleman	Abstain	
3	New York Power Authority	Marilyn Brown	Affirmative	
3	Niagara Mohawk (National Grid Company)	Michael Schiavone	Affirmative	
3	Northeast Missouri Electric Power Cooperative	Skyler Wiegmann	Affirmative	
3	Northern Indiana Public Service Co.	William SeDoris	Negative	
3	Orange and Rockland Utilities, Inc.	David Burke	Abstain	
3	Orlando Utilities Commission	Ballard K Mutters	Abstain	
3	Owensboro Municipal Utilities	Thomas T Lyons	Negative	
3	Pacific Gas and Electric Company	John H Hagen	Affirmative	
3	Platte River Power Authority	Terry L Baker	Affirmative	
3	Potomac Electric Power Co.	Robert Reuter		
3	Progress Energy Carolinas	Sam Waters	Affirmative	
3	Public Service Electric and Gas Co.	Jeffrey Mueller	Abstain	
3	Public Utility District No. 1 of Clallam County	David Proebstel	Affirmative	
3	Public Utility District No. 2 of Grant County	Greg Lange		
3	Puget Sound Energy, Inc.	Erin Apperson		
3	Rayburn Country Electric Coop., Inc.	Eddy Reece		
3	Sacramento Municipal Utility District	James Leigh-Kendall	Abstain	
3	Salt River Project	John T. Underhill		
3	Santee Cooper	James M Poston	Affirmative	
3	Seattle City Light	Dana Wheelock	Negative	
3	Seminole Electric Cooperative, Inc.	James R Frauen	Negative	View
3	South Carolina Electric & Gas Co.	Hubert C Young	Abstain	
3	Tacoma Public Utilities	Travis Metcalfe	Affirmative	
3	Tampa Electric Co.	Ronald L Donahey		
3	Tennessee Valley Authority	Ian S Grant	Abstain	

3	Wisconsin Electric Power Marketing	James R Keller	Abstain	
3	Xcel Energy, Inc.	Michael Ibold	Abstain	
4	Alliant Energy Corp. Services, Inc.	Kenneth Goldsmith	Affirmative	
4	American Public Power Association	Allen Mosher	Abstain	
4	Central Lincoln PUD	Shamus J Gamache	Negative	View
4	City of Austin dba Austin Energy	Reza Ebrahimian		
4	City of Clewiston	Kevin McCarthy	Negative	
4	City of New Smyrna Beach Utilities Commission	Tim Beyrle	Negative	
4	City of Redding	Nicholas Zettel	Affirmative	
4	City Utilities of Springfield, Missouri	John Allen	Affirmative	
4	Consumers Energy	David Frank Ronk	Affirmative	
4	Cowlitz County PUD	Rick Syring	Affirmative	
4	Flathead Electric Cooperative	Russ Schneider	Negative	
4	Florida Municipal Power Agency	Frank Gaffney	Negative	View
4	Fort Pierce Utilities Authority	Thomas Richards	Abstain	
4	Georgia System Operations Corporation	Guy Andrews	Affirmative	
4	Illinois Municipal Electric Agency	Bob C. Thomas	Abstain	
4	Imperial Irrigation District	Diana U Torres	Negative	View
4	Indiana Municipal Power Agency	Jack Alvey	Abstain	
4	Madison Gas and Electric Co.	Joseph DePoorter	Abstain	
4	Modesto Irrigation District	Spencer Tacke		
4	Northern California Power Agency	Tracy R Bibb		
4	Ohio Edison Company	Douglas Hohlbaugh	Affirmative	View
4	Public Utility District No. 1 of Douglas County	Henry E. LuBean	Affirmative	
4	Public Utility District No. 1 of Snohomish County	John D Martinsen	Affirmative	
4	Sacramento Municipal Utility District	Mike Ramirez	Abstain	
4	Seattle City Light	Hao Li	Negative	
4	Seminole Electric Cooperative, Inc.	Steven R Wallace	Negative	
4	South Mississippi Electric Power Association	Steven McElhaney		
4	Tacoma Public Utilities	Keith Morisette	Affirmative	
4	Wisconsin Energy Corp.	Anthony Jankowski	Abstain	
5	AEP Service Corp.	Brock Ondayko		
5	AES Corporation	Leo Bernier	Affirmative	
5	Amerenue	Sam Dwyer	Negative	
5	Arizona Public Service Co.	Edward Cambridge	Negative	
5	BC Hydro and Power Authority	Clement Ma	Abstain	
5	Bonneville Power Administration	Francis J. Halpin	Affirmative	
5	City and County of San Francisco	Daniel Mason	Negative	View
5	City of Austin dba Austin Energy	Jeanie Doty	Affirmative	
5	City of Grand Island	Jeff Mead	Abstain	
5	City of Redding	Paul Cummings	Affirmative	
5	City of Tacoma, Department of Public Utilities, Light Division, dba Tacoma Power	Max Emrick		
5	Cleco Power	Stephanie Huffman		
5	Cogentrix Energy, Inc.	Mike D Hirst	Affirmative	

5	Colorado Springs Utilities	Jennifer Eckels	Affirmative	
5	Consolidated Edison Co. of New York	Wilket (Jack) Ng	Abstain	
5	Constellation Power Source Generation, Inc.	Amir Y Hammad	Abstain	
5	Cowlitz County PUD	Bob Essex	Affirmative	
5	CPS Energy	Robert Stevens		
5	Detroit Edison Company	Christy Wicke	Negative	
5	Dominion Resources, Inc.	Mike Garton	Abstain	
5	Duke Energy	Dale Q Goodwine	Negative	View
5	Dynegy Inc.	Dan Roethemeyer	Affirmative	
5	Exelon Nuclear	Michael Korchynsky	Abstain	
5	ExxonMobil Research and Engineering	Martin Kaufman	Negative	
5	FirstEnergy Solutions	Kenneth Dresner	Affirmative	View
5	Florida Municipal Power Agency	David Schumann	Negative	View
5	Great River Energy	Preston L Walsh	Affirmative	View
5	Green Country Energy	Greg Froehling		
5	Imperial Irrigation District	Marcela Y Caballero	Negative	
5	JEA	John J Babik		
5	Kissimmee Utility Authority	Mike Blough	Negative	
5	Lakeland Electric	James M Howard		
5	Liberty Electric Power LLC	Daniel Duff	Negative	
5	Lincoln Electric System	Dennis Florom	Affirmative	
5	Los Angeles Department of Water & Power	Kenneth Silver	Affirmative	
5	Lower Colorado River Authority	Tom Foreman	Affirmative	
5	Luminant Generation Company LLC	Mike Laney	Affirmative	View
5	Manitoba Hydro	S N Fernando	Affirmative	
5	Massachusetts Municipal Wholesale Electric Company	David Gordon	Abstain	
5	MEAG Power	Steven Grego	Affirmative	
5	MidAmerican Energy Co.	Christopher Schneider	Abstain	
5	Muscatine Power & Water	Mike Avesing	Affirmative	
5	Nebraska Public Power District	Don Schmit	Abstain	
5	New Harquahala Generating Co. LLC	Nathaniel Larson		
5	New York Power Authority	Gerald Mannarino	Affirmative	
5	North Carolina Electric Membership Corp.	Jeffrey S Brame	Negative	
5	Northern Indiana Public Service Co.	William O. Thompson	Negative	
5	Occidental Chemical	Michelle R DAntuono	Negative	View
5	Oklahoma Gas and Electric Co.	Kim Morphis		
5	Omaha Public Power District	Mahmood Z. Safi	Affirmative	
5	Orlando Utilities Commission	Richard Kinas		
5	Pacific Gas and Electric Company	Richard J. Padilla	Affirmative	
5	PacifiCorp	Sandra L. Shaffer	Abstain	
5	Platte River Power Authority	Roland Thiel	Affirmative	
5	Portland General Electric Co.	Gary L Tingley		
5	PPL Generation LLC	Annette M Bannon	Affirmative	
5	Progress Energy Carolinas	Wayne Lewis	Affirmative	
5	Proven Compliance Solutions	Mitchell E Needham	Abstain	

5	PSEG Fossil LLC	Mikhail Falkovich	Abstain	
5	Puget Sound Energy, Inc.	Tom Flynn	Abstain	
5	Sacramento Municipal Utility District	Bethany Hunter	Abstain	
5	Salt River Project	Glen Reeves		
5	Santee Cooper	Lewis P Pierce	Affirmative	
5	Seattle City Light	Michael J. Haynes	Abstain	
5	Seminole Electric Cooperative, Inc.	Brenda K. Atkins	Negative	View
5	Snohomish County PUD No. 1	Sam Nietfeld	Affirmative	
5	South Mississippi Electric Power Association	Jerry W Johnson		
5	Southern Company Generation	William D Shultz	Affirmative	
5	Tampa Electric Co.	RJames Rocha	Negative	
5	Tenaska, Inc.	Scott M. Helyer	Abstain	
5	Tennessee Valley Authority	David Thompson	Abstain	
5	Tri-State G & T Association, Inc.	Barry Ingold		
5	U.S. Army Corps of Engineers	Melissa Kurtz	Negative	View
5	U.S. Bureau of Reclamation	Martin Bauer		
5	Western Farmers Electric Coop.	Caleb J Muckala		
5	Wisconsin Electric Power Co.	Linda Horn	Abstain	
6	AEP Marketing	Edward P. Cox	Abstain	View
6	APS	RANDY A YOUNG	Negative	
6	Associated Electric Cooperative, Inc.	Brian Ackermann		
6	Bonneville Power Administration	Brenda S. Anderson	Affirmative	View
6	City of Austin dba Austin Energy	Lisa L Martin	Affirmative	
6	City of Redding	Marvin Briggs	Affirmative	
6	Cleco Power LLC	Robert Hirchak	Affirmative	
6	Colorado Springs Utilities	Lisa C Rosintoski		
6	Consolidated Edison Co. of New York	Nickesha P Carrol	Abstain	
6	Constellation Energy Commodities Group	Brenda Powell		
6	Dominion Resources, Inc.	Louis S. Slade	Abstain	
6	Duke Energy Carolina	Walter Yeager		
6	Exelon Power Team	Pulin Shah	Abstain	
6	FirstEnergy Solutions	Kevin Querry	Affirmative	View
6	Florida Municipal Power Agency	Richard L. Montgomery	Negative	View
6	Florida Municipal Power Pool	Thomas Washburn	Affirmative	
6	Florida Power & Light Co.	Silvia P. Mitchell	Abstain	
6	Great River Energy	Donna Stephenson	Affirmative	View
6	Imperial Irrigation District	Cathy Bretz	Negative	
6	Kansas City Power & Light Co.	Jessica L Klinghoffer	Affirmative	
6	Lakeland Electric	Paul Shipps	Negative	View
6	Lincoln Electric System	Eric Ruskamp	Affirmative	
6	Manitoba Hydro	Daniel Prowse	Affirmative	
6	MidAmerican Energy Co.	Dennis Kimm	Abstain	
6	New York Power Authority	William Palazzo	Affirmative	
6	Northern Indiana Public Service Co.	Joseph O'Brien	Negative	View
6	NRG Energy, Inc.	Alan Johnson	Abstain	
6	Omaha Public Power District	David Ried	Affirmative	
6	PacifiCorp	Scott L Smith	Abstain	

6	Platte River Power Authority	Carol Ballantine	Affirmative	
6	PPL EnergyPlus LLC	Mark A Heimbach	Affirmative	
6	Progress Energy	John T Sturgeon	Affirmative	
6	PSEG Energy Resources & Trade LLC	Peter Dolan	Abstain	
6	Public Utility District No. 1 of Chelan County	Hugh A. Owen		
6	Sacramento Municipal Utility District	Claire Warshaw		
6	Salt River Project	Steven J Hulet	Abstain	
6	Santee Cooper	Michael Brown	Affirmative	
6	Seattle City Light	Dennis Sismaet	Negative	
6	Seminole Electric Cooperative, Inc.	Trudy S. Novak		
6	Snohomish County PUD No. 1	William T Moojen	Affirmative	
6	South California Edison Company	Lujuanna Medina		
6	Southern Company Generation and Energy Marketing	John J. Ciza	Affirmative	
6	Tacoma Public Utilities	Michael C Hill	Affirmative	
6	Tampa Electric Co.	Benjamin F Smith II		
6	Tennessee Valley Authority	Marjorie S. Parsons	Abstain	
8		Edward C Stein		
8		Merle Ashton	Affirmative	
8		James A Maenner	Negative	
8		Roger C Zaklukiewicz	Affirmative	
8		Kristina M. Loudermilk	Affirmative	
8	INTELLIBIND	Kevin Conway		
8	JDRJC Associates	Jim Cyrulewski	Negative	
8	Transmission Strategies, LLC	Bernie M Pasternack		
8	Utility Services, Inc.	Brian Evans-Mongeon	Abstain	
8	Volkmann Consulting, Inc.	Terry Volkmann	Affirmative	
9	Commonwealth of Massachusetts Department of Public Utilities	Donald Nelson	Affirmative	
10	New York State Reliability Council	Alan Adamson	Affirmative	
10	Northeast Power Coordinating Council	Guy V. Zito	Affirmative	
10	ReliabilityFirst Corporation	Anthony E Jablonski	Affirmative	
10	SERC Reliability Corporation	Carter B. Edge	Abstain	
10	Texas Reliability Entity, Inc.	Donald G Jones	Negative	View
10	Western Electricity Coordinating Council	Steven L. Rueckert	Affirmative	

Individual or group. (56 Responses)
Organization (32 Responses)
Group Name (24 Responses)
Lead Contact (24 Responses)
Question 1 (49 Responses)
Question 1 Comments (56 Responses)
Question 2 (49 Responses)
Question 2 Comments (56 Responses)
Question 3 (43 Responses)
Question 3 Comments (56 Responses)
Question 4 (0 Responses)
Question 4 Comments (56 Responses)

-
Individual
Edison Mission Marketing & Trading
Yes
Yes
Yes
Individual
Alber Corporation
Yes
Yes
Yes
My comment is in regard to the proposed maintenance tasks associated with ohmic testing and capacity testing of lead-acid batteries affected by PRC-005-2. The option is given to the battery use to perform either inter cell/unit ohmmic tests OR battery capacity tests whichever suits the user. The two tests, while related, are not directly interchangeable with one another. Ohmic tests are intended to be used as a tool during battery maintenance inspections to determine the general state of health (condition) of the battery as a whole. Capacity tests are intended to demonstrate the actual capacity of a battery. Ohmic tests cannot be substituted for capacity tests. Alber has pioneered the development of portable and fixed internal resistance test equipment for stationary lead-acid batteries since 1972. Through years of research, testing in real-world applications and development, Alber has conclusively determined that there is a direct relationship between internal cell resistance and capacity. However, because this correlation is not linear, ohmic measurements should not be used to calculate capacity or remaining life. Ohmic measurements should used as a supplement to capacity testing and not as a replacement. These measurements are very valuable in identifying developing problems between the capacity testing intervals and for determining whether a battery string is going to perform its intended mission. IEEE 1188-2005 for VRLA batteries agrees with this and recommends measurement of this parameter once every three months. While not specifically recommended in IEEE 450-2010 for vented lead-acid batteries, ohmic measurements can provide early warning of potential failure and should be performed at least annually. Again, if readings result in doubt that a battery will perform as intended, follow up capacity testing is recommended. A battery discharge test completely simulates the operating environment and therefore conclusively proves that a battery can perform during an emergency. The results of these tests will help set the priority for capacity testing as the user becomes more familiar with their batteries and may assist in extending capacity test intervals. The intention of the proposed NECR PRC-005-2 standard as it relates to the DC supply, and, in particular, the station battery is to increase reliability of the bulk electric system (BES) in north America. In its current draft form, PRC-005-2 proposes the utility may perform internal ohmic measurements or perform capacity, but both tests are not required. It would appear therefore, that the Standards Drafting Team (SDT) has made the assumption that test results obtained from measuring cell internal ohmic values is the same as performing a capacity test. It is not, and to provide the option to perform one test or the other runs counter to industry recommended practices. Such maintenance practices will, in effect, ultimately reduce the reliability of the BES rather than improve it. Periodic capacity testing on a 5 year interval for VLA batteries, and a 2 year interval for VRLA batteries is consistent with IEEE 450-2010 and IEEE 1188-2005 recommended practices respectively. It should be part of a complete maintenance program designed to maximize the DC supply's availability when needed. Respectfully submitted, Richard Tressler Alber Corp.

Group
Northeast Power Coordinating Council
Guy Zito
Yes
Yes
Yes
Individual
Flathead Electric Cooperative, Inc.
No
Specifying “by component type” appears confusing. It seems possible that some pieces of equipment from the same component type could end up in a different type of maintenance program. We suggest changing to “by component or component type” when entities determine the maintenance method in their PSMP. Generally, have concerns with all the new definitions except the NERC definition of Protection System. The approach to creating new definitions of plain language in a standard should be avoided.
Yes
We appreciate the work of the drafting team to fulfill the SAR objectives. Flathead generally does not like some of the new definitions proposed by the revised standard, especially R5, “Unresolved Maintenance Issues” is too vague and will be left up to individual auditors to determine compliance. In addition, it appears the drafting team is creating new definitions for plain english in the definition of Protection System Maintenance Program (PSMP). Surely "test, monitor, inspect, calibrate" don't need NERC definitions. Let's leave the definition as "An ongoing program by which Protection System components are kept in working order and proper operation of malfunctioning components is restored." Suggest deleting "A maintenance program for a specific component includes one or more of the following activities: • Verify— Determine that the component is functioning correctly. • Monitor — Observe the routine in-service operation of the component. • Test — Apply signals to a component to observe functional performance or output behavior, or to diagnose problems. • Inspect — Detect visible signs of component failure, reduced performance and degradation. • Calibrate—Adjust the operating threshold or measurement accuracy of a measuring element to meet the intended erformance requirement." In addition, it appears the component and component type definitions alter the meaning of the NERC approved definition of a protection system. I would suggest the drafting team not try to redefine the NERC-approved definition of Protection system. "Countable Event" definition seems to conflict with standards related to Misoperation of protection system.
Individual
Independent Electricity System Operator
Yes
Yes
Yes
The IESO continues to disagree with the VRF assigned to the new R3 and R4. R3 and R4 ask for implementing the maintenance plan (and initiate corrective measures) whose development and content requirements (R1 and R2) themselves have a Medium VRF. Failure to develop a maintenance program with the attributes specified in R1, and stipulation of the maintenance intervals or performance criteria as required in R2, will render R3/R4 not executable. Hence, we reiterate our position that the VRF for R3 be changed to Medium.
Individual
Sacramento Municipal Utility District
1) SMUD wishes to comment on the requirement to test the trip paths from relays that do not respond to electrical quantities. In two separate sections of the FAQ, the SDT included this new guidance on the trip paths. In section 2.4.1 of the FAQ, the SDT plainly asserts that the trip path from Sudden Pressure Relays (SPR) will now be covered and implies that the trip paths from non-electrically initiated devices might also be covered. In section 2.4.1, the SDT does not provide any guidance on how to determine which trip paths are included, but does provide guidance on how one

might test the trip path. In section 15.3, the SDT finally provides the guidance – control circuits (trip paths) are included if the relay is installed to detect faults on BES Elements. In reviewing the definition of Protection System, SMUD feels the “Control circuitry associated with protective functions…” to be in reference to the “Protective relays which respond to electrical quantities”. The SDT is now applying a new interpretation in which each of the five bullets is considered separately. Furthermore, the SDT appears to be defining “…associated with protective functions…” to mean detecting faults on the BES. What basis can the SDT offer for defining this phrase to mean detecting faults on the BES? Since this same wording is not used in defining the relay, can a relay be covered under the standard, but not its control circuitry? For instance, Out of Step Tripping? Over Excitation? Frequency or Voltage Protection on a generator? These relays respond to electrical quantities, but are not applied to detect faults on BES Elements. SMUD believes this interpretation takes us down a very confusing path. SMUD respectively requests the SDT strike the new wording (as seen on the redlined version) in 2.4.1 and 15.3.
Group
Progress Energy
Jim Eckelkamp
1. Table 3, Row 7: The requirement to “Verify electrical operation of electromechanical lockout and/or tripping auxiliary devices” contradicts Section 15.7, bullet 2 of the Supplementary Reference and FAQ document. In the supplementary reference, the phrase “and/or auxiliary tripping device(s)” has been struck out.
Individual
Ingleside Cogeneration LP
Yes
Ingleside Cogeneration agrees that a Compliance Authority should be alerted to those component types which have been assigned extended maintenance intervals because they use some form of monitoring. We also agree that it is appropriate that the PSMP list the relevant monitoring attributes in these cases, so they can be confirmed to be consistent with the criteria in PRC-005-2’s interval tables.
No
Ingleside Cogeneration LP strongly agrees with the change made to the language in R1 and R3 specifying that compliance is measured against the PRC-005-2’s interval tables wherever time-based methods are used. The intervals were carefully designed to assure an acceptable level of BES reliability, and the regulatory authorities must be prepared to stand by them. Furthermore, a Registered Entity who may establish tighter intervals for their own internal purposes should be encouraged to do so – and without a threat of a violation hanging over their heads. We also agree with the need to add a new requirement (R4) which applies to those entities who choose to use a performance-based system to determine some of their maintenance intervals. It logically maps back to requirement R2 which states that the calculated intervals must be documented in the PSMP. We cannot agree with the language used in R5, which, in its previous form under R3, had specified only that the Protection System owner “initiate resolution” to correct identified unresolved maintenance issues. We were actually comfortable with this language as it was unambiguous that progress did not need to be tracked start-to-finish. We would like to propose adding a phrase that tracks the statement in M5; which we find acceptable. This would result in the following: R5. Each Transmission Owner, Generator Owner, and Distribution Provider shall demonstrate THAT IT HAS UNDERTAKEN <our emphasis> efforts to correct identified Unresolved Maintenance Issues.
No
We do not agree with the assertion in the reference and FAQs that the DC supply and control circuitry for mechanical components are part of a BES Protection System. This is not an accepted norm in the existing Standard as the Project Team claims – only an expansion in scope that was not properly vetted by the industry. If the Compliance Authorities believe that electrical components which support mechanical systems are rightfully part of the BES or BPS, then this has implications far beyond Protection System maintenance. The appropriate place to begin this determination is with Project 2010-17 Defintion of the BES – where it can be fully reviewed by all affected industry stakeholders.
The derivation of the implementation plan apparently incorporates the “requirements” of NERC’s Compliance organization, which has released several CANs on the topic. This is exactly backwards, and has led to at least one CAN which has been withdrawn due to legal overreach. However, the plan as written is very complex. We believe that diagrams of acceptable time frames should be included in the implementation plan so that industry stakeholders can better assess the impact on their maintenance operations.
Individual
Liberty Electric Power LLC
Yes
Yes
Thank you for the change in Requirement 3. This standard now gives clear direction to entities, removes the burden of "created paperwork" intended only for the use of auditors, and removes the compliance jeopardy for holding a program to a higher standard than required.

Yes
Group
DTE Energy
Kent Kujala
No
DECo does not agree. With the exception of station batteries, all components should be tested as a scheme to assure that all components are working together as designed, so the PSMP should not be required for each component type.
Yes
No
DECo does not agree with the 6 year interval for the majority of the Protection System componenets. There are not sufficent problems found on routine maintenance based on a 10 year interval that would justify that significant of a reduction in the maintenance interval. Also, with respect the the station batteries specifically, station batteries, DECo recommends the elimination of the 4 month inspection as annual inspections have been sufficient for early diagnosis of potential issues. Advanced monitoring is not practical at this time as it does not appear that the technology required to forgo the 4 month inspection is readily available.
Group
MRO NSRF
WILL SMITH
Yes
Yes
No
Section 5.1 (second paragrath, under the first bullet) states: “TBM can include review of recent power system events near the particular terminal. Operating records may verify that some portion of the Protection System has operated correctly since the last test occurred. If specific protection scheme components have demonstrated correct performance within specifications, the maintenance test time clock can be reset for those components.” If this “actual event” can be used as proof that the Protection System operated correctly, then this should be added to M3 in the Measures section of PRC-005-2. Seciton 2.4.1 – Sudden Pressure Relays – This question should be clarified that circuits from only EHV transformers should be considered in scope. As highlighted by the NERC GMD reports EHV transformers (345, 500 & 765 kV) are critical. In addition, circuits that do not actually trip a breaker (panel lights, alarms, etc.) should not be included in the scope of components included in the maintenance and testing program.
• Article 4.2.1 – The NSRF believes that this article should be revised to say ”Protection Systems installed for the purpose of protecting BES Elements only and detecting Faults on BES Elements. Protection Systems designed to protect non-BES elements that incidentally open 100 kV and greater breakers are excluded from the scopte of PRC-005-2”. This makes it very clear what is included in the scope of the Testing and Maintenance program and what is not. • Change the text of “Standard PRC-005-2 – Protection System Maintenance” Table 1-5 on page 21, Row 1, Column 3 to: “Verify that a trip coil is able to operate the circuit breaker, interrupting device, or mitigating device.” Or alternately, “Electrically operate each interrupting device every 6 years” Trip coils are designed to be energized no longer than the breaker opening time (3-5 cycles). They are robust devices that will successfully operate the breaker for 5,000-10,000 electrical operations. The most likely source of trip coil failure is the breaker operating mechanism binding, thereby preventing the breaker auxiliary stack from opening and keeping the trip coil energized for too long of a time period. Therefore, trip coil failure is a function of the breaker mechanism failure. Exercising the breakers and circuit switchers is an excellent practice. Exercising the interrupting devices would help eliminate mechanism binding, reducing the chance that the trip coils are energized too long. The language as currently written in Table 1-5 row 1, will also have the unintentional effect of changing an entities existing interrupting device maintenance interval (essentially driving interrupting device testing to a less than 6 year cycle). The NSRF believes that as written the testing of “each” trip coil will result in the increased amount of time that the BES is in a less reliable system configuration. The NSRF hopes that the SDT will consider these changes. • The NSRF recommends the statement “Excluding distributed UFLS and distributed UVLS (see Table 3)” be added to the top of Table 1-4(f). • Table 3. There will be many DP’s that have distributed UFLS (or UVLS) solely on the distribution system (less than 100 kV). The only item these DP’s will have to verify under Table 3 “Protection System dc supply” is the Protection System dc supply voltage. Yet, the definition of Protection System, as it relates to dc supply is ”Station dc supply associated with protective functions (including batteries, battery chargers, and non-battery-based dc supply)”. Our interpretation of Table 3 and Section 15.7 of the Supplementary Reference & FAQ document is that a DP need only check the dc supply voltage at the terminals of the relays. If that is the SDT interpretation as well, we recommend revising Table 3 of the standard to reflect that. Table 3 contains issues that need to be addressed in a similar fashion as discussed for non-UFLS and non-UVLS systems, i.e. Table 1-1. Comparison to independent sources is only one way to check for a reliable AC measuring device. It also

appears that monitoring capabilities are not being given any credit in regards to the AC sensing devices, DC supply, or control circuitry themselves. There should be no difference in the way these systems are treated compared to BES Protection Systems. • In Section D Compliance, Article 1.3, paragraph 4 the standard requires documentation be kept for the ". . .two most recent performances of each distinct maintenance activity. . .". This needs to clarified that it cannot go back before 06/18/07, as evidenced by the suspension of CAN-0008. Also with some of the testing intervals being 12 years, that would dictate a Registered Entity maintain 24 years of records, which is unreasonable. This article should be revised to have documentation for the most current testing interval, if after 06/18/07. • It is understood that lockout relay testing is important as unexercised lockouts can stick and cause regional outages as experienced at Westwing. However, lockout testing by itself is risky and can lead to local outages. If Registered Entities are required to take on the additional risk of testing lockout relays, dispenstation must be granted for outages caused by those tests. The following statement should be included in the standard "No enforcement actions or penalties will result from outages caused by relay testing unless a Registered Entity shows a history of 3 or more test related outages per year for 5 years." • In the VSL for Table 4 it seems that the phrase "5% or less" should be "not more than 5%". With the original language it seems like an entity could be found to have an R4 lower VSL violation for "failure" of zero meaning they had done no testing. This VSL is written in the negative and should be rewritten in the positive. • The drafting team needs to clarify "maintenance summaries" as stated in Measure M3. This is an ambiguous term that could be interpreted differently amongst entities. If a term such as 'summary' is to be utilized within the standard, a clear definition of what the term is, what it pertains to, where it is located, etc. needs to be included. The NSRF recommends that "maintenance summaries" be defined and included in the "Definition of Terms used in Standard" section. • Footnote 1 in the Table sections would be much improved by inserting an example similar to what was provided in Section 8.4 of the Supplemental Reference and FAQ document . • Additional methods of verification should be allowed for AC measurement monitoring other than simply performing comparison to an independent source. For example, a sudden rate of change in calculated relay MW analog value and/or 3Io calculation would give way towards a bad CT and/or path. Loss of potential logic is available in most microprocessor relays today, which is very reliable logic for determining PT/CCVT issues. Consideration should be given to utilities that are capable of performing this type of monitoring in order to allow them to reach that next level of attributes. • Please clarify why input/output verification is excluded from the highest level of monitoring related to communications systems (Table 1-2). The way the monitoring attribute is listed does not provide that these will operate when needed. Recommend language be added similar to the monitoring of inputs and outputs described in the relay section (Table 1-1). • Table 1-3 should take into account the same concepts mentioned above in regards to AC measurement verification in Table 1-1. There are alternative ways to verify these quantities while still ensuring reliable operation. As such, companies should be given the opportunity to implement them. Additionally, credit should be given to circuit monitoring and alarming in AC circuits with electromechanical relays. If a transducer/alarming relay is placed in the circuit and monitoring is alarmed appropriately, the health of the AC sensing device can be determined. This would essentially provide the same level assurance as mentioned with the microprocessor relays. • Clarification is needed on the last row of Table 1-5. Does integrity entail monitoring and alarming of every individual path, if necessary, or is overall integrity sufficient? This statement is once again open to interpretation and leaves the entity at the mercy of the auditor.
Individual
NIPSCO
Per NIPSCO Tech Service Dept : There is a need for NERC to provide a format for maintenance reports. Also, it would help if specific test requirements for relays was provided.
Individual
TransAlta Centralia Generation LLC
Yes
Yes
More detail explanation or examples of Efforts on R5 is required
Yes
More detail explanation on Segment is required, the reason of sixty (60) individual components is required for one Segment. More detail explanation on Countable Event is required.
1.3 Evidence Retention. The standard said: For Requirement R2, R3, R4 and R5, the Transmission Owner, Generator Owner and Distribution Provider shall each keep documentation of the two most recent performances of each distinct maintenance. How to count" the most recent performance ". Is this Standard going forward basis? For some of the protection system component, the maximum maintenance interval is 12 years (such as CT, PT or microprocessor relay) on the standard, how to count the two most recent performance?
Group
Tacoma Public Utilities
Kieth Morisette
Yes

Yes
Yes
1. For components that are part of a time-based PSMP, if correction of Unresolved Maintenance Issues takes place before the maximum maintenance interval expires, is it mandatory to demonstrate (document) these efforts to correct identified Unresolved Maintenance Issues? Is the purpose of Requirement R5 only to avoid compliance jeopardy when an entity discovers a problem during maintenance but cannot correct the problem until after the maximum maintenance interval has expired (as discussed in the Supplemental Reference and FAQ document)? Or, is the purpose also to ensure that all Unresolved Maintenance Issues are documented even if they corrected very quickly and within the maximum maintenance intervals and just considered part of routine maintenance (i.e., Unresolved Maintenance Issues not explicitly documented) in a manner similar to recalibrating a relay? 2. Assume that a component under a time-based PSMP is not considered “monitored” per the PSMP, but in actuality it is. If an alarm comes in, indicating a component problem, would the entity have any additional documentation obligations under PRC-005-2 associated with this alarm, provided that all minimum maintenance activities and maximum maintenance intervals associated with the unmonitored component are satisfied? The concern is that, if there are additional documentation obligations, then many entities may disable monitoring in some cases in order to avoid compliance jeopardy. 3. Assume that an entity treats batteries at certain remote communication sites as if they were applicable to PRC-005-2. These sites are not substations or generating facilities but support the broad communication system, including teleprotection functions. Furthermore, these sites have limited access during some times of the year because of heavy snow or ice. It is conceivable that it may not be possible to meet all minimum maintenance activities or all maximum maintenance intervals (4 and 6 calendar months) unless the site is extensively monitored and/or field personnel expose themselves to hazard. Would any allowances be made in these cases? Would these sites even be applicable to PRC-005-2, since they are not part of a “station” DC supply? 4. It is still unclear whether Section 15.3 permits periodically verifying DC voltage at the actuating device trip terminals as an acceptable method of accomplishing the maintenance activity identified in Table 1-5 for unmonitored control circuitry associated with protective functions. It is recommended that this approach be considered acceptable, provided that auxiliary relays are operated within the maximum maintenance interval. 5. In the Implementation Plan for Requirements R1, R2, and R5, why there is a requirement to “be 100% compliant [with R5] on the first day of the first calendar quarter twelve (12) months following applicable regulatory approvals”? The emphasis of this question is on Requirement R5, which pertains to Unresolved Maintenance Issues. 6. In the Implementation Plan for R3 and R4, to be considered “100% compliant with PRC-005-2,” is it only necessary to have completed the applicable minimum maintenance activities one time for the applicable component (which is our assumption)? Or, does being considered 100% compliant under this Implementaiton Plan imply that two instances of the applicable minimum maintenance activities must have been completed for the applicable component?
Group
Imperial Irrigation District (IID)
Jesus Sammy Alcaraz
Yes
No
IID disagree with item c. and does not believe item c increases the reliability of the BES. The maintenance issues will be resolved internally and should not be required as per compliance of the standard.
Yes
Group
Dominion
Louis Slade
Yes
Yes
Dominion understands R3 to mean that the time-based maintenance interval can be less that but not exceed the maximum maintenance intervals in the tables. But that compliance will be based upon the maximum interval. Please confirm that our understanding is correct. Dominion belives the intent of the footnote in Table 1-1 is to ‘start the interval’ on either the 1st day of a calendar year or calendar month. We also believe this will require any entity whose current intervals are based on annual or monthly will have to adjust their intervals to calendar as they transition to PRC-005-2. Please confirm our understanding is correct. We also believe this transition could result in the compliance interval measurement being shorter or longer than it would have been if PRC-005-2 had not been approved. If this is incorrect, please provide examples to provide clarity.

Group
Texas Reliability Entity
Don Jones
Yes
No
New requirement R5 states that an entity shall “demonstrate efforts” to correct identified Unresolved Maintenance Issues. This falls short of requiring completion of any corrective actions for the unresolved maintenance issue. We suggest rewording to “Each Transmission Owner, Generator Owner, and Distribution Provider shall develop a corrective action plan and work timetable to address identified Unresolved Maintenance Issues. The Registered Entity shall complete resolution of Unresolved Maintenance Issues within the time frame identified in the Entity corrective action plan.” If R5 is modified, then M5 and the VSL should also be modified accordingly.
1. The Implementation Plan is still overly long and complicated. Registered Entities and Regional Entities will have to track and apply multiple versions of this standard for up to 14 years. It would be preferable to have a much shorter implementation plan, so that only one version of the standard will be applicable at any given time, recognizing that for some Components no action will be required under the standard for a number of years. 2. Referring to R3, R4 and M1 (and other places), it is redundant to add “Protection System” to describe “Components “or “Component Types” based on the “local definitions” provided. Alternatively, the defined term could be changed to “Protection System Component” and used consistently. 3. In Table 1-3, the activity should include verifying that the current and voltage signal values are within tolerances, not just that signal values are present. The minimum activity should include a ratio check and/or burden check of current transformers. Suggest revising to state “Verify that current and/or voltage signal values provided to the protective relays are within the accuracy tolerance of the voltage and current sensing device”. 4. In the VSL for R2, we are assuming that the “4% within three years” is a 4% failure rate based on Attachment A, but that is unclear. We suggest clarifying this language to match Attachment A language. 5. What is the basis for the 4% failure rate limit in Attachment A? It would appear that a 4% failure rate is high for protective relays. Does the SDT have a technical justification supporting the selection of 4% as the applicable limit? 6. In Attachment A, item 4 in the “maintain the technical justification” section needs clarification. It can be assumed that the phrase ”for the greater of either the last 30 Components maintained or all Components maintained in the previous year” is referring to Components within a specific Segment, but more specific language may be needed. Also, are the references to “prior year” and “previous year” intended to refer to calendar years or 365 days preceding the analysis? 7. In Attachment A, item 5 in the “maintain the technical justification” section needs clarification. We suggest adding a timeframe for the “experience 4% or more Countable Events” phrase. Does this refer to any 12-month period? Additionally, the determination of a timeframe for “4% of the Segment population” is needed. Example- If there are 100 Components in a performance-based Segment in Year 1 and I add an additional 100 Components in Year 2, is the 4% based on 100 or 200?
Individual
Entergy Services
Yes
Yes
Yes
We recommend the word “Protection” be deleted from the definition of Component to make the defined term Component be a generic term. If that word is not deleted then we recommend the term used in the standard “Protection System Component” be changed to “Component” since as defined a Component is a Protection System piece of equipment. Component – A Component is any individual discrete piece of equipment included in a System, including but not limited to a protective relay or current sensing device. The designation of what constitutes a control circuit Component is dependent upon how an entity performs and tracks the testing of the control circuitry. Some entities test their control circuits on a breaker basis whereas others test their circuitry on a local zone of protection basis. Thus, entities are allowed
Group
Southwest Power Pool Standards Development Team
Jonathan Hayes
Yes
Yes
Yes

Under section 1.3 Evidence Retention we feel like documentation of the last two performances of each distinct maintenance activity should be limited to the last one. This is due to the amount of documentation being recorded as well as for certain components there is a 12 year maximum interval. Would you have to store this information for 24 years? This could also violate the NERC ruling that was just made on a CAN 008 that stated you do not have to show intervals earlier than June 18th 2007. Suggested alternate language " For Requirement R2, Requirement R3, Requirement R4, and Requirement R5, the Transmission Owner, Generator Owner, and Distribution Provider shall each keep documentation of the most recent performance of each distinct maintenance activity for the Protection System Components, or all performances of each distinct maintenance activity for the Protection System Component since the previous audit date, whichever is longer, but not prior to June 18th 2007."
Group
Tennessee Valley Authority
Dave Davidson
Yes
Yes
Yes
1. Regarding the functional test required every 3 months for "unmonitored communication systems" in Table 1-2 of the PRC-005-2 Draft. TVA feels that a Maximum Maintenance Interval for the Functional Test should be every 12 months until auto-checkback has been fully implemented by the utility. 2. The Implementation Plan for PRC-005-2 Step 4 on Page 2 states: "The Implementation Schedule set forth in this document requires that entities develop their revised Protection System Maintenance Program within twelve (12) months following applicable regulatory approvals, or in those jurisdictions where no regulatory approval is required, on the first day of the first calendar quarter twenty-four (24) months following NERC Board of Trustees adoption. This anticipates that it will take approximately twelve (12) months to achieve regulatory approvals following adoption by the NERC Board of Trustees." TVA feels that this is not sufficient time to implement full auto-checkback capability at some utilities. The time schedule of twelve (12) months should be forty-eight (48) months following applicable regulatory approvals. 3. TVA has many excitation transformers directly connected to the generator bus, configured such that a fault on the excitation transformer will cause a generator trip. Is the intent that the revised standard will include these transformers in the applicability? Would they be included by section 4.2.5.1? 4. TVA (Rusty Hardison) has forwarded a slide presentation with six questions to the PRC-005-2 Draft Team requesting consideration as input to the Frequently Asked Questions document accompanying the standard. Thank you for considering.
Individual
ATCO Electric Ltd
Yes
Yes
Yes
Table 1-4(a) Vented Lead-Acid (VLA) Batteries: ATCO Electric has a number of remote substations that are difficult to access frequently. The requirement for a 4 calendar month inspection for electrolyte level is too frequent. (i) Does alarm/monitor technology exist for electrolyte level in battery design today? For in-service battery systems, if battery alarm/monitor technology exists, a capital project is required to retrofit each battery system and this kind of retrofit work could be detrimental to both the battery design life as well as the battery reliability. (ii) The electrolyte level requirement would become achievable if electrolyte level inspection was moved to the 18 calendar months category, or if the 4 calendar months frequency was increased to 8 calendar months. Table 1-4(b) Valve Regulated Lead Acid (VRLA) Batteries: ATCO Electric has a number of remote substations that are difficult to access frequently. The requirement of a 6 calendar month inspection of individual battery cell/unit internal ohmic values is too frequent. The requirement would become achievable if battery cell/unit internal ohmic value inspections were moved to the 18 calendar months category. Table 1-5 Control Circuitry When a breaker is opened, there is no indication on which trip coil is actually operated. How do market participants demonstrate compliance for "verify that each trip coil is able to operate..."? The verification of trip coil health is done during breaker maintenance with various maintenance durations that maybe longer than 6 years depending on breaker types. The requirement of "verify electrical operation of electromechanical lockout devices" introduces high risk of human error outages to the BES system and diminishes the reliability gain from performing this activity. The drafting team should consider lockout relay failure rates, onerous tasks of blocking each trip contacts in many BES elements' tripping circuits, imposed risk, required resources in the overall reliability benefit gained by performing the lockout relay maintenance.
Individual
American Electric Power
No

R1.1 binds you to the activities in the table, but our system is comprised of elements (such as a Plant Control Systems), that are not included in the table. As a result, it is not clear how an entity could develop an SPS that satisfies both the requirement and our sytem.

No

R3: Table 1-5 notes a “mitigating device” as part of component attributes. Such a phrase could be open to interpretation and needs to be clearly defined. Table 1-3, Maintenance Activities – there is nothing specifically regarding accuracy. Suggest incorporating the definition of “verify” as used in the FAQ or perhaps something similar to “verify values are as expected”. R5: We understand the drafting team’s desire to deal with unresolved maintenance issues, however it is not clear how the adequacy of resolving those issues would be determined by an auditor. If these kinds of efforts are going to be scrutinized, there needs to be some sort of boundaries established so that it is clear how unresolved maintenance issues would be evaluated.

No

Though the guidance provided in these documents may appear to be beneficial, we are troubled that despite the time spent on them by the drafting team, and the voluminous nature of the references, that the information contained in them essentially fades away upon approval of the standard. Rather than voluminous supplementary references, we suggest adding this information, as necessary, to the standard itself. Not only would this prove beneficial by having less information housed outside of the standard, it might help prevent the need for future CANs and interpretation requests.

PRC-005-2 is intended to supersede the existing standard PRC-017-0 "Special Protection System Maintenance and Testing". As it is currently written, an Entity with a Special Protection System will be required by R1 to select either a time-based, performance-based or combination maintenance method for the Entity's SPS. Since Special Protection Systems are not frequently installed, it is unlikely that an Entity will be able to meet the requirement of R2 and Attachment A that the Segment population contain 60 components for all components of the SPS. This will require the Entity to utilize the time-based maintenance method for at least some components in the SPS. Under the time-based maintenance method and R3, the Entity will be required to utilize the minimum maintenance activities and maximum maintenance intervals prescribed within Tables 1-1 through 1-5, Table 2, and Table 3. Special Protection Systems by their nature may physically include components that are not listed in the NERC definition of Protection System and therefore are not included in the tables of PRC-005-2. The standard, as currently drafted, does not clearly provide a means for an Entity with a Special Protection System to establish minimum maintenance activities and maximum maintenance intervals for components that have been declared by their Region as part of a Special Protection System but that are not included in the NERC definition of Protection System.

Individual

Manitoba Hydro

No

Please see comments provided in Question 4.

Yes

Yes

Manitoba Hydro is voting negative for the following reasons: 1 - Battery inspection and verification interval - Manitoba Hydro maintains that the battery inspection interval should be extended to 6 months. The 4 month interval is too frequent based on our experience and while IEEE std 450 (which seems to be the basis for table 1-4) does recommend intervals, it also states that users should evaluate these recommendations against their own operating experience. Manitoba Hydro has more than ten years of experience using its existing battery inspection intervals and Manitoba Hydro’s reliability data has proven that the 6 month inspection interval is suitable for Manitoba Hydro. Manitoba Hydro’s battery maintenance tasks were derived from a reliability study of Manitoba Hydro stationary batteries, and the tasks and intervals are suitable given Manitoba Hydro’s installed plant, design criteria, climate, and reliability performance. A more frequent inspection interval might be more suitable to specific utilities with material differences in climate, design, installed apparatus, and performance, but it is not suitable for Manitoba Hydro and may be more than is required for many other utilities. To use a more frequent inspection interval would penalize Manitoba Hydro which has been diligently performing battery inspections for many years, with no resulting increase in reliability. It would also potentially adversely affect reliability by diverting resources away from projects that are critical to reliability to meet this maintenance interval. In addition, the 4 month time period proposed for basic battery verification and inspection interval is not aligned with the more detailed 18 month battery verification and inspection interval which will result in additional and unnecessary site visits and maintenance activities. As well, Manitoba Hydro does not feel that the SDT has provided sufficient technical basis to support a 4 month battery inspection and verification interval and requests that further justification and external reference be provided. 2 - PBM not permitted for batteries - Manitoba Hydro disagrees with the SDT’s basis for not permitting the use of PBM for batteries. The reasons provided by the SDT for disallowing them are that batteries are perishable and involve chemical reactions. However, it is our understanding that many other industries rely on performance based maintenance programs when dealing with similar equipment. We would appreciate an external reference or source which supports the claim that equipment with these characteristics cannot have a performance based maintenance system applied to them. 3 - Phased Implementation Plan - Manitoba Hydro maintains its position that prescribing how an entity must reach full compliance with PRC-005-2 will provide a negligible improvement in reliability while significantly increasing the compliance burden. PRC-005-2 affects a large number of assets and proving compliance for the prescribed percentages of assets during the transition period creates

unnecessary overhead with no added value. We suggest that the requirement to demonstrate the percentage of assets currently under PRC-005-1 vs. PRC-005-2 be removed, that entities should be given a single compliance date for each of the maintenance intervals and be allowed the flexibility to schedule and complete their maintenance as required while transitioning to the defined time intervals in PRC-005-2, and that NERC measures progress on reaching PRC-005-2 intervals using means other than Compliance measures such as industry surveys. 4 - Data Retention Requirements - The data retention requirements are too uncertain for two reasons. First, the requirement to “provide other evidence” if the evidence retention period specified is shorter than the time since the last audit introduces uncertainty because a responsible entity has no means of knowing if or when an audit may occur of the relevant standard. Secondly, it is unclear what ‘other evidence’, besides the specified evidence in the Measures, an entity may be asked to provide to demonstrate it was compliant for the full time period since their last audit.
Group
FirstEnergy
Sam Ciccone
Yes
Yes
No
Please see our comments and suggested changes to the Supplemental Reference and FAQ document in Question 4.
FE asks that the team clarify the intent of certain aspects of the applicability section: Sec. 4.2.5.4 - For transformers supplying unit auxiliaries, protective functions that provide for transferring of auxiliaries without tripping the generating unit should not be included. Also, we believe that the term "station service transformer" is being used inaccurately. As currently written, the section includes all the protection systems for station service transformers for generators that are a part of the BES. It states, “Protection Systems for generator-connected station service transformers for generators that are part of the BES.” Generating facilities may have transfer schemes on the auxiliary transformer to transfer equipment to a reserve transformer instead of tripping the unit. These protection systems should not be included in the Facilities for PRC-005-2, since the BES is not affected. But since a station service transformer, by definition (IEEE Std. 505), is "a transformer that supplies power from a station high voltage bus to the station auxiliaries and also to the unit auxiliaries during unit startup or shutdown or when the unit auxiliaries transformer is not available, or both." [Ed. note: a.k.a. Start-Up Transformer or Cranker], the terminology "generator-connected station service transformer" is confusing and easily subject to misinterpretation. Also, there needs to be consistency of use of terms between the standard and its Supplementart Refererence document. On pages 32 and 33 of the FAQ, the following questions and their respective answers should be consistent with use of terms and replace “station service” with “auxiliary” as follows: FAQ Question - Please provide a sample list of devices or systems that must be verified in a generator, generator step-up transformer, and generator connected auxiliary transformer to meet the requirements of this Maintenance Standard. FAQ Question - In the case where a plant does not have a generator connected auxiliary transformer such that it is normally fed from a system connected auxiliary transformer, is it still the drafting team’s intent to exclude the protection systems for these system connected auxiliary transformers from scope even when the loss of the normal (system connected) auxiliary transformer will result in a trip of a BES generating facility? Therefore, for consistency between the reference FAQ document and the standard, we suggest that “station service” be replaced with “auxiliary” in 4.2.5.4 and read as follows: “Protection Systems for generator-connected auxiliary transformers used on generators which are part of the BES, that act to trip the generator either directly or via lockout or tripping auxiliary relays.”
Individual
Westar Energy
Yes
Yes
No
We believe all of the 4 month intervals can be changed to 6 month intervals and still ensure reliability. It is unclear which equipment Table 1-4(d) applies to. In the heading it says “Excluding distributed UFLS and distributed UVLS”, then the line below that says “non-distributed UFLS system, or non-distributed UVLS systems is excluded”.
Individual
Ameren
Yes
Yes
No
We agree with the intent of the Supplement changes but believe that they are either incomplete or need clarification.

Therefore, we provide the specifics as follow : (a) Page 93, Revise Section 15.7 Distributed UFLS (i) Change Table 1-2 to 1-3.(ii)Inculde 'Verify operation…and/or auxiliary tripping device' to agree with Table 3. (b) Please identify BES Elements in Supplementary Reference Figure 2. (c) Remove 'Reverse power relays' from the bulleted list on the top section of page 33. They provide thermal of the steam turbine, and they may protect CTG speed reduction gear teeth, but neither of these are electrical protection of the generator. (d) Please add Interval FAQ to address a component minimum maintenance activity that is not in the present PRC-005-1 program. (i) : "How is interval proven for a component minimum maintenance activity that is not in the present PRC-005-1 program? For example, suppose the present program continuously monitors a communication system, say audio tones, and personnel respond to alarms; this approach presently have basis that is sufficient. (ii) Table 1-2 requires two maintenance activities every 12 calendar years: 1) verify channel meets performance criteria; and 2) verify essential I/O. The entity is required to perform these minimum maintenance activities one time in the first 13 years after regulatory approval. The 12 year interval is proven by the date of the PRC-005-2 maintenance activity and the date of your PRC-005-1 program applicable for the previous maintenance. After the second time the PRC-005-2 maintenance activity is performed, appropriately sometime in year 14 to 25 after regulatory approval, then interval will be proven by the dates of the two PRC-005-2 maintenance activities." (e) Page 17 We disagree with retention of maintenance records for replaced equipment as this can cause confusion. At most the last maintenance date could be retained to prove interval between it and the test date of the replacement equipment that provides like-kind protection. (f)Page 36, FAQ 'initial date for maintenance' answer is inconsistent with CAN-0011. Though the CAN applies to PRC-005-1, it should be consistent with NERC's position on this. (g) Page 71, Please remove 'The trip path from a sudden pressure device is a part of the Protection System control circuitry…' because the actuating relay does not respond to electrical quantities. This is just one example of the many gotcha's that will no doubt arise in enforcement. (h) If a capacitor trip device is an example of a non-battery based station DC supply, then please provide a FAQ to convey it.
(a) R3 & R4: Change VRF to "Medium" for the following reasons: (i) Consistency with existing standards that PRC-005-2 replaces. Per the VRF_Standards_Applicability_Matrix_2012-03-01, PRC-005-1b R2 VRF is Lower, PRC-008-0 R2 VRF is Medium, PRC-011-0 R2 VRF is Lower, and PRC-017-0 R2 VRF is Lower. (ii) We are not aware that lack of Protection System maintenance alone has directly caused or contributed to bulk electric system instability, separation, or a cascading sequence of failures. (iii) Many entities do not presently perform several of the proposed minimum maintenance activities, and/or perform maintenance activities at greater than the PRC-005-2 maximum interval. Yet BES system instability, separation, or cascading sequence of failure events are extremely rare. (iv) Either change VRF to Medium, or double the percentage ranges applied to each component type across VSLs. We strongly believe that the SDT needs to retune these to match the experienced risk, which has been extremely low. (b) Measure M3 on page 6 should only apply to 99.5% of the components. Please revise to state: "Each … shall have evidence that it has implemented the Protection System Maintenance Program for 99.5% of its components and initiated…." We believe that PRC-005-2 unrealistically mandates perfection without providing technical justification. A basic premise of engineering is to allow for reasonable tolerances, even Six Sigma allows for defects. Requiring perfection may well harm reliability by distracting valuable resources from higher priority duties concerning the Protection System. We are not asking for the VSL to be changed. The consequence of a very small number of components having a missed or late maintenance activity is insignificant to BES reliability. Our proposed reasonable tolerance sets an appropriate level of performance expectation. We disagree with the notion that this is "non-performance". (c) Measure M5 – add 'internal inventory / parts request, trouble investigation assignment, trouble repair report' as examples of an entity undertaking efforts with internal parts and/or labor resources. (d) Augment R3 and R4 VSL with a 'number based limit for populations up to 100 components' for comparable treatment of small entities. For example, for Lower VSL restate as '…the responsible entity failed to maintain from one to five Components if total Components is less than 100; or 5% or less of the total Components if total exceeds 99 included within a specific Protection System Component Type…'. Otherwise a small entity could unfairly incur a Severe violation for the same number of Components that a larger entity would incur a Lower VSL. (i) Similarly, Moderate numbers should be 6 to 10; High 11 to 15; and Severe 16 or more if the total Components of a certain Component Type that is less than 100. (e) Augment R5 VSL with percentage based limits for comparable treatment of larger entities. For example, for Lower VSL restate as 'The responsible entity failed to undertake efforts to correct 5 or less Unresolved Maintenance Issues if total of such issues in the audit period is less than 100; or 5% or less if total of such issues in the audit period exceeds 99.' (i) Similarly, Moderate numbers should be >5% to 10%; High >10% to 15%; and Severe more than 15% if the total Unresolved Maintenance Issues in the audit period exceeds 99. (f) Please number all pages of the standard. They are missing from pages with tables. (g) Please add a title to the table following Table 3. Is it a continuation of Table 3?
Group
PNGC Comment Group
Ron Sporseen
No
Specifying "by component type" appears confusing. It seems possible that some pieces of equipment from the same component type could end up in a different type of maintenance program. We suggest changing to "by component or component type" when entities determine the maintenance method in their PSMP.
Yes
The PNGC comment group agrees with this change. Removing the jeopardy associated with more stringent intervals will make it less risky for entities to tighten intervals in their PSMP.
Yes

We thank the SDT for their hard work and will be voting "yes" on this project. However, we have 5 specific comments independent of the questions above and we've listed them in order of priority: 1. The PNGC Comment Group takes issue with the associated VSLs for R3. For a small entity using a time based maintenance program, even one missed interval could be enough to elevate them to a high VSL despite the limited impact on the Bulk Electric System. Consider an entity with 9 total components within a specific Protection System Component Type. One violation would mean an 11% violation rate, enough to catapult them into a High VSL. Given the “NERC Guidance (Below), this seems to be a contradiction given the language of “…more than one”. a. NERC Guidance on VSL assignment: i. LOWER: Missing a minor element (or a small percentage) of the required performance ii. Modedrate: Missing at least one significant element (or a moderate percentage) of the required performance. iii. High: Missing more than one significant element (or is missing a high percentage) of the required performance or is missing a single vital component. iv. Severe: Missing most or all of the significant elements (or a significant percentage) of the required performance. We suggest changing the language for “Lower VSL” for R3 to: For Responsible Entities with more than a total of 20 Components within a specific Protection System Component Type in Requirement R3, 5% or fewer have not been maintained… Or For Responsible Entities with a total of 20 or fewer Components within a specific Protection System Component Type, 2 or fewer Components in Requirement R3 have not been maintained… 2. The PNGC comment group disagrees with the “Evidence Retention” requirements for the standard. In the current version for R2-R5, entities are required to: “…keep documentation of the two most recent performances of each distinct maintenance activity for the Protection System Components, or all performances of each distinct maintenance activity for the Protection System Component since the previous scheduled audit date, whichever is longer.” The PNGC comment group believes that keeping documentation for one previous maintenance activity or since the last audit, whichever is longer, should be sufficient. Keeping the two most recent instances of an acitivity with a maximum maintenance interval of 12 years could mean planning for up to 35 years or so of evidence retention. With the longer of “since the last audit” or “at least one maintenance interval” as the minimum retention requirement the CEA should have sufficient basis to determine compliance. 3. The PNGC comment group believes R5, “Unresolved Maintenance Issues” is too vague and will be left up to individual auditors to determine compliance. This requirement appears ripe for misapplication and future CANs on the topic. Good utility practice will ensure that maintenance issues are corrected as a primary function of our members is to provide the most reliable service possible. The SDT lists several possible examples of evidence in M5 but we believe that more specificity is needed for evidence requirements or the requirement should be removed. We understand the importance of “maintenance” of protection systems and that when maintenance issues cannot be immediately addressed there needs to be follow up. We believe notation of the maintenance issue during the inspection should be sufficient for compliance. By including the examples in the associated measure for the requirement, we believe the SDT has confused the issue. In our opinion M5 should indicate that evidence of notation of the issue is all that is required (meaning acknowledging of the issue on the inspection form). Further, in your response to entity comments during the last comment period on this topic, you stated, “The SDT believes that an effective PSMP must include correction of deficiencies…”. This statement implies that the standard must cover the correction of deficiencies to completion. There could be very long time frames associated with maintenance including management budget decisions, equipment purchase lead times and personnel scheduling for follow up work. Some issues could potentially require years of tracking within this standard creating an unnecessary compliance risk for the entity. We believe the SDT has met the intent of order 693 if a maintenance activity is initiated. The completion of the initiated maintenance activity should be outside the bounds of the standard and the standard should clearly state this. 4. We also find issues with the “Definitions of Terms Used in Standard” Specifically, the definition of “Component” seems to confuse the subject unnecessarily. We suggest simplifying the definition by breaking out the control circuitry and votage and current sensing device examples. That is a lot of material to cover in what should be a simple definition of “Component”. 5. Also we believe the definitions of the 5 behaviours under the PSMP definition are unnecessary. We believe that indicating that the PSMP involves some or all of the 5 activities without trying to define them is fine. For example, your definition of “Inspect” states: Detect visible signs of component failure, reduced performance and degradation. But what if you find no failure, reduced performance or degradation? Have you not inspected the component? Or what about “verify”? If you determine the componenet is not functioning correctly, have you not verified anything?
Individual
Central Lincoln
Yes
: We thank the SDT for removing the extra compliance jeopardy associated with stringent intervals. The extra jeopardy never made sense to us, since it could result in sanctions to one entity and no sanctions to another entity when both followed the same interval with no BES risk presented by either. We are concerned regarding the language of R5. We understand that maintenance without resolution is worthless, but the language here is subjective allowing different auditors to reach differing conclusions whether a sufficiently documented effort has been made. We also note that entities are expected to be continually in compliance with applicable standards, and are expected to self report when they are not. Strictly interpreted, an entity is out of compliance with R5 if there is any time lag between the moment the problem is identified in the field and documentation is produced of an effort taken to resolve it. We suggest the inclusion of a reasonable time limit.
No
The Supplemental Reference and FAQ apparently has not kept up with definition changes and uses uncapitalized

“component” “Protection System components”. Please use capitals if defined terms are intended.
Central Lincoln appreciates the good work the SDT has done. We believe this particular team has actually listened to our comments and made changes where needed. Thanks.
Individual
BAE Batteries USA
Yes
Yes
No
Page 20 states that every 18 months "battery ohmic values to station battery baseline (if performance tests are not opted)" should be changed to add comment that ohmic values, while permissible as a tool, should not be taken to validate the actual capacity, thus the reliability of the battery. If capacity is an issue due to questionable ohmic values shown, a decision must be made to [1] perform a capacity test following one of the three methodologies recorded in IEEE 450 or IEEE 1188; [2] make a decision to replace the battery string depending upon the number of cells with quesitonable ohmic values shown, the age of the battery string, and the critical nature of the station in question; or [3] accept the risk that the battery may or may not perform as intended due to the lack of a true knowledge of the battery capacity (See IEEE Letter to Al McMeekin). Every 18 calendar months verify/inspect the following: "Cell Condition of all individual battery cells (where visible) should add "or as frequently as recommended in the battery manufacturer's operating instructions." Every 6 years: perform or verify the following: "Battery Performance Test (if internal ohmic tests are not opted)" should be changed to read "Battery Performance Test (if ohmic tests are not conducted or if ohmic test values show that a degraded situation with the cells call into question whether the battery will perform to "design requirements." this should be repeated where referenced in additional examples (VLA, VRLA, Ni-Cd)
The NERC Standard should incorporate suggestions made in a letter provided to the NERC Drafting Team along w/ a specific Task Force Report commissioned by the IEEE Stationary Battery Committee.
Individual
City of Austin dba Austin Energy
Yes
Yes
Yes
The effort expended by the SDT in creating and revising the content of the Supplemental Reference and FAQ is admirable and most appreciated. The guide is a useful reference.
Individual
BAE Batteries USA
Yes
Yes
No
Page 20 of the Supplemental Reference and FAQ document in Example 1 states that "Every 18 months verify/inspect the following: o Battery bank ohmic values to station battery baseline (if performance tests are not opted). A sentence should be added stating: "ohmic values, while useful as a tool to determine continuity and condition of individual cells, should not be taken to validate the actual capacity or reliability of the battery string. If capacity is an issue due to questionable ohmic values shown, a decision must be made to [1] perform a capacity test following one of the methodologies prescribed in IEEE 450, 1188, or 1106; [2] make a decision to replace the battery string depending upon the number of cells with questionable ohmic values, the age of the battery string, and the critical nature of the functional entity operating station in question; or [3] accept the risk that the battery may or may not perform as intended due to the lack of a true knowledge of the battery capacity (see IEEE Stationary Battery Committee letter to Al McMeekin and the NERC SDT). In this same example on page 20, Every 18 months . . . bullet 5: "Cell condition of all individual battery cells (where visible)," words should be added in 2nd parenthesis "(18 months or as frequently as recommended in the battery manufacuter's operating and maintenance instructions." On page 21 of the Supplemental Guide, Example 1 states: "Every 6 calendar years perform or verify the following:" 1st bullet: "Battery performance test (if internal ohmic tests are not opted)." Recommend that this should be changed to say: "Battery Performance Test (if internal ohmic tests are not opted or if ohmic test values show that a degraded situatioj with the cells call into question whether the battery will perform to 'design requirements'." This language should be incorporated into all following examples that reference batteries, whether VLA, VRLA or Ni-Cd. On page 73 of the Supplemental Reference there is a detailed discussion under Section 15.4 regarding continuity. In the 3rd paragraph reference is made to "not to limit the owner to the two methods recommended in the IEEE standards. Continuity as used in Table 1-4 of the Standard refers to

verifying that there is a continuous path from the positive terminal of the station battery to the negative terminal. Without verifying continuit of a station battery, there is no way to determine that the station battery is available to supply dc power to the station. An open battery string will be an unavailable power source in the event of loss of the battery charger." This argument is carried forward on page 74 of the Supplemental guide under the paragraph titled in bold: "What did the PSMT SDT mean by "continuity" of the dc supply. The problem with this whole section is that while there are statement presented that are true in the limited context of continuity, nevertheless have the ability to mislead the reader into thinking that continuity can be equated to capacity. This is evidenced by the reference to "open circuit." While open circuit conditions are more critical to a VRLA, the issue is not only whether there is continuity or open circuit, but whether the battery still maintains sufficient capacity to hold up the load under a worst-case condtion if exercised in that event. The most effective and accepted way at the present time is via a capacity test (Again, see letter to Al McMeekin and the SDT from the IEEE Stationary Battery Committee).

Major comments have been addressed in Question 3.

Individual

US Bureau of Reclamation

No

The requirement R1 states that the PSMP must identify how the component is to be maintained, using time based or performance based or a combination. While R1 requires a PSMP, there is no measure that the PSMP is used for acutally maintaining the components, other than for documenting which maintenance method is being used. The purpose of R1 is therefore administrative. Since there is no measure for the use of the PSMP, why is the entity required to develop the PSMP as defined? There is no VSL for R1 which requires that the entity establish a PSMP. Since there is no severity level associated a PSMP that does not contain one of the required activities it supports elimination of the definition of PSMP. PSMP definition is also weak and does not match with the VSL that the PSMP identify the maintenance method of the protection system component types. The definition is that PSMP which must include: "A maintenance program for a specific component includes one or more of the following activities: • Verify— Determine that the component is functioning correctly. • Monitor — Observe the routine in-service operation of the component. • Test — Apply signals to a component to observe functional performance or output behavior, or to diagnose problems. • Inspect — Detect visible signs of component failure, reduced performance and degradation. • Calibrate—Adjust the operating threshold or measurement accuracy of a measuring element to meet the intended performance requirement." Since requirement 1 essentially only requires identification of which maintenance method is to be used, there is no need for the definition. It no longer matters how the device's functionality is determined as long as it is performed on a time based or performance based method. This approach may be lowering the reliability level associated with the protection system maintenance. Since the definition of PSMP is that only one of the 5 activities is needed, is seems that one could select to "Monitor" the in-service operation of the component on a time base and no further action is needed. So that could mean observe that the relay has power and was not misoperating every six years and maintenance is performed. A PSMP is as defined does not help the reliability. It would be better require the PSMP include as a minimum all five activities defined as well as defining the maintenance method used (time based, performance based, or a combination). There needs to be a requirement that the PSMP needs to be developed. Then Requirement 1 would be to implement the PSMP.

No

The Requirement R5 indicates the entity has to "demonstrate" efforts to correct identified unresolved maintenance issues. The measure M5 described documentation of the efforts. The requirement language should be explicit. Does the standard want a demonstration which implies active role of the entity to prove what it is doing, or to provide documentation of the activities underway to correct deficiencies? The language in the requirement should be altered to "Each Transmission Owner, Generator Owner, and Distribution Provider shall prepare a CAP for each identified Unresolved Maintenance Issue." A second requirement is needed to require that "Each Transmission Owner, Generator Owner, and Distribution Provider shall complete its CAP to correct the identified Unresolved Maintenance Issues." The measures would need to be adjusted accordingly to reflect the CAP and evidence that the entity completed the CAP.

Yes

Re Terms defined for use only within PRC-005-2: The standard provides definitions which will not be incorporated into the Glossary of Terms. This would allow the definitions as used in this standard to conflict with the definition used in other standards if this practice becomes more widespread and would reduce the cohesiveness of the standard set. Re The definition of Components: The standard defined what constitutes a control circuit as a component type with "Control circuitry associated with protective functions through the trip coil(s) of the circuit breakers or other interrupting devices." The standard then modified the definition by allowing "a control circuit Component is dependent upon how an entity performs and tracks the testing of the control circuitry." The definition should not be dependent upon practice. This makes the definition a fill in the blank definition. Either eliminate the allowance or remove the definition of control circuit.

Group

Western Area Power Administration

Brandy A. Dunn

Yes

Yes
No
Western Area Power Administration does not agree that the trip path from a sudden pressure device is a part of the protection system control circuitry as stated in the revised Supplementary document. FAQ should be used as guidance and not for compliance.
Western Area Power Administation – Rocky Mountain Region does not agree with changing lockout devices to 6 year intervals for testing.
Individual
NextEra Energy, Inc.
Verifying electrolyte levels of vented lead acid (VLA) batteries every four (4) calendar months is excessive and will not promote the reliability of the bulk electric system (BES). The maximum maintenance interval should be twelve (12) calendar months. Today's lead-calcium and lead-selenium-low antimony batteries do not experience rapid water loss as compared to the legacy lead-antimony batteries and if battery cells should crack from positive plate growth, twelve (12) calendar months is more than adequate to detect electrolyte leakage before cell failure. Verifying that unmonitored communication systems are functional every four (4) calendar months is excessive and will not promote the reliability of the BES. The maximum maintenance interval should be twelve (12) calendar months. Based on our operating experience, twelve (12) calendar months is sufficient to detect communication failures without affecting the reliability of the BES.
Individual
Essential Power, LLC
Yes
No
The change to R3 is too restrictive, and removes the registered entity's ability to better define its own intervals based on its own experience and system characteristics. The comments regarding a CEA's enforcement of an RE's more stringent internal intervals is not indicative of an issue with the Requirement, but with the way in which it is enforced.
a. This DRAFT Standard is written as a prescriptive 'procedure' and not as a 'Standard'. The SDT should revise the Standard to address the goal, or intent, rather prescribing how entities should meet the Standard. b. Inclusion of non-BES elements within the Standard falls outside of NERC's jurisdiction, as defined in the EPA 2005. The SDT should remove these elements from the Standard. c. The inclusion of dc circuitry for equipment that is itself not covered under the Standard is not logical and does not contribute to reliability. The SDT should remove this from the Standard.
Group
Nebraska Public Power District
Cole Brodine
No
Since auditors will be able to request documentation necessary to validate the inclusion of the device within the appropriate level of monitoring, why does the program document require listing level of moniotoring and component attributes? (Concerned about the burden of maintaining lists of components in a program document that are alike but have different levels of monitoring. Ex: Monitored and unmonitored microprocessor relays) For identification of the relevant monitoring attributes applied can a single specification document suffice for similar relay types such as one document for SEL relays? For trip circuit monitoring can a standard document be used for a group of similar schemes?
No
The FAQ attempts to clarify the intent of "demonstrate efforts to correct", however, there is no explanation as to why this new term is preferable to the more concise "initiate resolution" term that was developed and agreed upon over the last year. In the supplementary reference and FAQ document there is a request for clarification and it is reprinted below. Please clarify what is meant by "…demonstrate efforts to correct an unresolved maintenance issue…"; why not measure the completion of the corrective action? Management of completion of the identified unresolved maintenance issue is a complex topic that falls outside of the scope of this standard. There can be any number of supply, process and management problems that make setting repair deadlines impossible. The SDT specifically chose the phrase "demonstrate efforts to correct" (with guidance from NERC Staff) because of the concern that many more complex unresolved maintenance issues might require greater than the remaining maintenance interval to resolve (and yet still be a "closed-end process"). For example, a problem might be identified on a VRLA battery during a 6 month check. In instances such as one that requiring battery replacement as part of the long term resolution, it is highly unlikely that the battery could be replaced in time to meet the 6 calendar month requirement for this maintenance activity. The SDT does not believe entities should be found in violation of a maintenance program requirement because of the inability to

complete a remediation program within the original maintenance interval. The SDT does believe corrective actions should be timely but concludes it would be impossible to postulate all possible remediation projects and therefore, impossible to specify bounding time frames for resolution of all possible unresolved maintenance issues or what documentation might be sufficient to provide proof that effective corrective action is being undertaken. I agree with this response and specifically the last sentence. This indicates that R5 “demonstrating efforts to correct unresolved issues” is too open ended and subjective and cannot be applied by enforcement in a consistent way. R5 should be removed from the standard.
No
Section D 1.3 Evidence Retention – Do not agree with requirement to keep the two most recent performances of each distinct maintenance activity. Should not require records previous to last audit. What is the point of keeping records up to twenty years? FAQ page 7 and 77 now include discussion about how sudden pressure relays are “presently” excluded because they do not meet the definition of a protection system and a method of component verification does not exist. This part I agree with. The problem is that they go on to explain that the DC control circuitry from the Sudden Pressure relay is part of a protection system. This I disagree with. It’s clear that the Standards Drafting Team is attempting a compromise to address direction from FERC Docket No. RM10-5-000. This approach however, sets a bad precedence. A trip path from a non-protection system component should not be classified as a protection system trip path. The removal of grace periods and the comments in the FAQ that it will be up to the Auditor to determine if a test was not done due to extraordinary circumstances (example: Communications can’t be tested due to the line out from a storm and under repair) is not acceptable. The SDT needs to come up with guidelines for these situations and not leave it up to each auditor to determine what is acceptable.
The SDT believes that it is possible to manage the risks that you describe and that performance of these trip path verifications will be an overall benefit to the reliability of the BES Please provide the basis for the requirement of functional trip checks? Are there recorded instances that an “event” would have been avoided if functional trip checks had been performed? Suggest for monitored microprocessor relays in Table 1-1 and 3 to verify “settings are as specified that are essential to the proper functioning of the protection system”. Many settings are not essential. A key concern is will the reliability of the bulk electric system be affected negatively due to increased risk from human element initiated events as a result of the more frequent functional trip checks that will be required. All functional tests should be moved to the minimum frequency of 12 years to minimize this unknown but present risk.
Individual
American Transmission Company, LLC
Yes
Yes
Yes
ATC recommends that the SDT change the text of “Standard PRC-005-2 – Protection System Maintenance” Table 1-5 on page 21, Row 1, Column 3 to: “Verify that a trip coil is able to operate the circuit breaker, interrupting device, or mitigating device.” Or alternately, “Electrically operate each interrupting device every 6 years” Basis for the change: Trip coils are designed to be energized no longer than the breaker opening time (3-5 cycles). They are robust devices that will successfully operate the breaker for 5,000-10,000 electrical operations. The most likely source of trip coil failure is the breaker operating mechanism binding, thereby preventing the breaker auxiliary stack from opening and keeping the trip coil energized for too long of a time period. Therefore, trip coil failure is a function of the breaker mechanism failure. Exercising the breakers and circuit switchers is an excellent practice. ATC would encourage language that would suggest this task be done every 2 years, not to exceed 3 years. Exercising the interrupting devices would help eliminate mechanism binding, reducing the chance that the trip coils are energized too long. The language, as currently written in Table 1-5 row 1, will also have the unintentional effect of changing an entities existing interrupting device maintenance interval (essentially driving interrupting device testing to a less than 6 year cycle). ATC continues to recommend a negative ballot since we believe that the testing of “each” trip coil will result in the increased amount of time the BES is in a less intact system configuration. ATC hopes that the SDT will consider these changes.
Group
Florida Municipal Power Agency
Frank Gaffney
The applicability of the standard should be modified to reflect the FERC approved interpretation PRC-005-1b Appendix 1 that basically says that applicable Protection Systems are those that protect a BES Element AND trip a BES Element.The interpretation states: The applicability as currently stated will sweep in distribution protection: “4.2.1 Protection Systems that are installed for the purpose of detecting Faults on BES Elements (lines, buses, transformers, etc.)” Many (most) network distribution systems that have more than one source into a distribution network will have reverse power relays to detect faults on the BES and trip the step-down transformer to prevent feedback from the

distribution to the fault on the BES. This is not a BES reliability issue, but more of a safety issue and distribution voltage issue. These relays would be subject to the standard as the applicability is currently written, but, should not be and they are currently not within the scope of PRC-005-1b Appendix 1 because the step-down transformer (non-BES) is tripped and not a BES Element (hence, the "and" condition of the interpretation is not met). There are many other related examples of distribution that might be networked or have distributed generation on a distribution circuit where such reverse power relays, or overcurrent relays with low pick-ups, are used for safety and distribution voltage control reasons and are not there for BES Reliability. To make matters worse, for these Reverse Power relays, it is pretty much impossible to meet PRC-023 because the intent of the relay is to make current flow unidirectional (e.g., only towards the distribution system) without regard for the rating of the elements feeding the distribution network. So, if these relays are swept in, and if they are on elements > 200 kV, then the entity would not be able to meet PRC-023 as that standard is currently written. So, the SDT should adopt the FERC approved interpretation.

Individual

CenterPoint Energy

Yes

Yes

Yes

CenterPoint Energy recommends retaining an option to utilize technology for monitoring trip coil continuity as an alternative to the maintenance activity in Table 1-5. The Table 1-5 requirement to "Verify that each trip coil is able to operate the circuit breaker, interrupting device, or mitigating devices (regardless of any monitoring of the control circuitry)" appears to address breaker maintenance, instead of Protection System Controls. In the Supplementary Reference and FAQ, monitoring is described as greatly reducing the time between a component failure and discovery of that failure. For the “Control circuitry between the UFLS or UVLS relays and electromechanical lockout and/or tripping auxiliary devices (Excludes non-BES trip coils)”, the Table 3 requirement is to “Verify the path from the relay to the lockout and/or tripping auxiliary relay (including essential supervisory logic)” every 12 calendar years. CenterPoint Energy recommends this requirement be revised to “No periodic maintenance specified”. CenterPoint Energy believes this to be a commissioning task, not a preventive maintenance task. A preventive maintenance task, such as the above, is unnecessary for distributed UFLS and UVLS system components. The overriding performance, or “risk-based”, NERC Reliability Standards for UFLS are PRC-006 and PRC-007 where an entity is required to shed their obligated firm load amount. For the “Unmonitored control circuitry associated with protective functions inclusive of all auxiliary relays”, the Table 1-5 requirement is to “Verify all paths of the trip circuits inclusive of all auxiliary relays through the trip coil(s) of the circuit breakers or other interrupting devices” every 12 calendar years. CenterPoint Energy recommends this requirement be revised to “No periodic maintenance specified”. CenterPoint Energy believes that verifying all tripping paths is a commissioning task, not a preventive maintenance task. Alternatively, CenterPoint Energy recommends specifically excluding panel wiring and requiring only cabling between panels and interrupting devices be verified. Requiring trip path verification to include panel wiring complicates maintenance while focusing on a component that is not subject to age-related degradation in addition to, historically, not being a source of protection system failures. This type of testing can negatively impact BES system reliability with the outages that are required and by exposing the electric system to incorrect tripping.

Individual

ReliabitliyFirst

ReliabilityFirst votes in the negative for this standard primarily due to the language in Requirement R5. The language in Requirement R5 is subjective and non-measurable in its present state. ReliabilityFirst offers the following comments for consideration. 1. Definition of “Component” a. The language stating “discrete piece of equipment” within the first sentence is unclear and open ended. ReliabilityFirst suggests the following modified language for the first sentence in the definition of “Component”: “A Component is a piece of equipment that is one of the five specific element included in a Protection System, including but not limited to a protective relay or current sensing device.” 2. Definition of “Unresolved Maintenance Issue” a. There may be instances when a deficiency is identified and corrected during the maintenance itself. For further clarity and to address this circumstance, ReliabilityFirst recommends the following modification for consideration: “A deficiency identified during a maintenance activity that could not be corrected and causes the component to not meet the intended performance and requires follow-up corrective action.” 3. Facilities Section 4.2.1 a. This is too limited or selective in only including Protection Systems that are installed on BES Elements to strictly detect Faults. There are a number of relays that are installed to detect non-Fault but abnormal conditions such as power swings/out of step and overvoltage that should not be excluded from a maintenance program. ReliabilityFirst recommends the following language for consideration: “Protection Systems that are installed for the purpose of protecting BES Elements (lines, buses, transformers, etc.)” 4. Facilitates Section 4.2.2 a. It is unclear what requirements the phrase “installed per ERO underfrequency load-shedding requirements.” is referring to. Is it NERC UFLS Requirements, Regional UFLS Requirements, etc.? To be consistent with section 4.2.3, ReliabilityFirst

recommends the following for consideration: “Protection Systems used for underfrequency load-shedding systems installed to arrest declining frequency, for BES reliability. 5. Requirement R3 a. For time-based maintenance program(s), there is no safeguard if more than 4% Countable Events are experienced during a maintenance interval. ReliabilityFirst recommends adding an new Subpart 3.1 (similar to the language for performance-based in Attachment A): “3.1 If the Components in a Protection System Segment maintained through a time-based PSMP experience 4% or more Countable Events, develop, document, and implement a Corrective Action Plan to reduce the Countable Events to less than 4% of the Segment population within 3 years.” 6. Requirement R5 a. Requirement R5 has language which states “…shall demonstrate efforts to correct…”. ReliabilityFirst believes this language is subjective and non-measurable. It will be difficult in determining what amount of demonstration an entity will need to provide in order to be compliant. There is also no timeframe in which the correction needs to be completed (is it 30 days or 30 years?). ReliabilityFirst believes measurable language such as “shall correct” or “shall have and implement a Corrective Action Plan” should be incorporated within the requirement. 7. Table 1-2 a. For “Any communications system with continuous monitoring or periodic automated testing for the presence of the channel function, and alarming for loss of function” ReliabilityFirst believes the maintenance interval is too short. Carrier communication failures are a major cause of Misoperations. Many have automatic checkback and are monitored but continue to fail during Fault conditions. ReliabilityFirst recommends a maintenance interval of 6 years. b. For “Any communications system with continuous monitoring or periodic automated testing for the performance of the channel using criteria pertinent to the communications technology applied” ReliabilityFirst believes a maintenance interval should be required. ReliabilityFirst recommends a maintenance interval of 12 years. 8. Table 1-3 a. For “Any voltage and current sensing devices not having monitoring attributes of the category below.” ReliabilityFirst recommends a maintenance interval of 6 years. b. For “Voltage and Current Sensing devices connected to microprocessor relays with AC measurements are continuously verified by comparison of sensing input value…” ReliabilityFirst believes the concept of never having to do any testing just because you have continuous monitoring is fundamentally flawed in this table as well as 1-5 and 2. Continuous monitoring and measurement comparison cannot test everything, such as loss of ground, multiple grounds and turn-to-turn failures, and monitoring itself can fail. ReliabilityFirst recommends a maintenance interval of 12 years. 9. Table 1-5 a. ReliabilityFirst recommends adding “auxiliary tripping devices” to Electromechanical lockout devices in row 2 of Table 1-5. If lockout relays are maintained every six years auxiliary tripping devices should be as well. ReliabilityFirst recommends the following language for considerations: “Electromechanical lockout devices and auxiliary tripping devices which are directly in a trip path from the protective relay to the interrupting device trip coil (regardless of any monitoring of the control circuitry).”
Group
Pepco Holdings Inc. & Affiliates
David Thorne
Yes
Yes
No comment
Individual
Xcel Energy
Yes
No
We agree with the changes to R3 and the new R4 requirement but disagree with the wording change in the new R5 requirement. The difference between “initiate resolution” and “demonstrate efforts to correct identified unresolved maintenance issues” is very unclear. Please clarify the SDT’s intent with this subtle wording change. In our opinion, it would be fairly obvious if an entity met a requirement to “initiate resolution” and, thus, this would be easily measurable requirement. It seems that the phrase “demonstrate efforts to correct identified unresolved maintenance issues” will be open to more auditor judgement as to what constitutes adequate efforts to correct a deficiency and thus makes the measurement of meeting this requirement far more arbitrary. If this is not the intent, then why bother with the wording change? Furthermore, CEAs should realize that entities already have strong financial incentives in correcting identified unresolved maintnance issues to minimize the risk of costly equipment damage or equally costly outages of critical equipment. Delays in correcting identified unresolved maintenance issues are seldom driven by cost avoidance and are more likely driven by the time it takes to develop, engineer and/or procure a better solution to a problem. Prompt band-aid type fixes are not necessarily desirable fixes and the wording of R5 should not promote the band-aid approach to the correction of a problem.
Yes
Individual
Duke Energy

Yes
Yes
Yes
• Duke Energy votes “Negative” because we strongly object to the wording in the Applicability section 4.2.1. We believe that the wording change to PRC-005-2 draft 4 after the Successive Ballot but prior to the Recirculation Ballot expanded the reach of the standard to relaying schemes that detect faults on the BES but are not intended to provide protection for the BES. FERC’s September 26, 2011 Order in Docket No. RD11-5 approved NERC’s interpretation of PRC-005-1 R1 and R2, stating: “The interpretation clarifies that the Requirements are “applicable to any Protection System that is installed for the purpose of detecting faults on transmission elements (lines, buses, transformers, etc.) identified as being included in the [BES] and trips an interrupting device that interrupts current supplied directly from the BES.” This interpretation is consistent with the Commission’s understanding that a “transmission Protection System” is installed for the purpose of detecting and isolating faults affecting the reliability of the bulk electric system through the use of current interrupting devices.” The SDT’s response to our comment directed us to Section 2.3 of the Supplementary Reference And FAQ Document which states “There should be no ambiguity: if the element is a BES element then the Protection System protecting that element should be included within this Standard.” We agree with that statement, but question why the SDT insists on changing Section 4.2.1 to include devices that detect Faults on the BES but which do not provide protection for the BES? Duke Energy’s standard protection scheme for dispersed generation at retail stations would become subject to the standard due to the changes in section 4.2.1. These protection schemes are designed to detect faults on the BES, but do not operate BES elements nor do they interrupt network current flow from the BES. In the most recent draft, the relays, current transformers, potential transformers, trip paths, auxiliary relays, batteries, and communication equipment associated with the dispersed generation protection scheme would be subject to the requirements in PRC-005-2. Previous drafts of the standard would not have required Duke Energy to maintain the protection system components associated with dispersed generation schemes at retail stations in accordance to the requirements in PRC-005-2. The new wording in section 4.2.1 would add significant O&M costs and resource constraints due to the inclusion of protection system devices at retail stations without increasing the reliability of the BES. Duke Energy does not believe it was the intent of the standard to include elements that did not have an impact on the reliability of the BES. Duke Energy would prefer the following definition: Protection Systems that are installed for the purpose of protecting BES Elements (lines, buses, transformers, etc.)”. • We also note that the Lower VSLs for R3 and R4 include violations for “5% or less”, and R5 for “5 or less” which mandates perfection. We believe that the consequence of a very small number of components having a missed or late maintenance activity is insignificant to BES reliability.” We suggest that a range of 0.5% to 5% would be more reasonable.
Individual
ExxonMobil Research and Engineering
No
As written, the current draft of PRC-005-2 discriminates against smaller entities that do not have a population size of 60 for each component type. Historical records provide an accurate account of how specific components have performed in their installed environment. For a set population size, increasing the number of historical data points should improve the accuracy of an entity’s calculated mean time between failure, so, if you increase the period over which the historical data must be evaluated, you can compensate for a smaller segment population size. The SDT’s current draft prevents smaller entities from using a larger historical data set to make up for a smaller population size when developing a performance based protective system maintenance and testing program. The SDT should reconsider allowing smaller entities to use historical records that extend for period longer than a single year in the development of a performance based program .
No
As written, the current draft of PRC-005-2 discriminates against smaller entities that do not have a population size of 60 for each component type. Historical records provide an accurate account of how specific components have performed in their installed environment. For a set population size, increasing the number of historical data points should improve the accuracy of an entity’s calculated mean time between failure, so, if you increase the period over which the historical data must be evaluated, you can compensate for a smaller segment population size. The SDT’s current draft prevents smaller entities from using a larger historical data set to make up for a smaller population size when developing a performance based protective system maintenance and testing program. The SDT should reconsider allowing smaller entities to use historical records that extend for period longer than a single year in the development of a performance based program.
No
: As written, the current draft of PRC-005-2 discriminates against smaller entities that do not have a population size of 60 for each component type. Historical records provide an accurate account of how specific components have performed in their installed environment. For a set population size, increasing the number of historical data points should improve the accuracy of an entity’s calculated mean time between failure, so, if you increase the period over which the historical data must be evaluated, you can compensate for a smaller segment population size. The SDT’s current draft prevents smaller entities from using a larger historical data set to make up for a smaller population size when developing a performance based protective system maintenance and testing program. The SDT should

reconsider allowing smaller entities to use historical records that extend for period longer than a single year in the development of a performance based program.

As written, the current draft of PRC-005-2 discriminates against smaller entities that do not have a population size of 60 for each component type. Historical records provide an accurate account of how specific components have performed in their installed environment. For a set population size, increasing the number of historical data points should improve the accuracy of an entity's calculated mean time between failure, so, if you increase the period over which the historical data must be evaluated, you can compensate for a smaller segment population size. The SDT's current draft prevents smaller entities from using a larger historical data set to make up for a smaller population size when developing a performance based protective system maintenance and testing program. The SDT should reconsider allowing smaller entities to use historical records that extend for period longer than a single year in the development of a performance based program.

Group

Bonneville Power Administration

Chris Higgins

Yes

No

BPA believes that R5 is not worded in such a way that it can be easily or consistently audited.

Yes

BPA believes that PRC-005-2 achieves the goal of reducing redundancy and overlap within the PRC standards by consolidating four existing standards into one. BPA's comments are focused on improving the clarity and audit-ability of the proposed standard. Regarding Section D1.3 "Evidence Retention", BPA suggests that the entire first paragraph be removed because for all the instances that follow the first paragraph there is a requirement to keep evidence obtained since the last audit. Therefore, there are no instances where the evidence retention period is shorter than the time since the last audit, and the first paragraph is not necessary. Furthermore, the first paragraph introduces the idea of "other evidence" for which there is no explanation. It is unclear what could be used for evidence other than the items described in the Measures. The idea of "other evidence" should not be introduced without an explanation of what that evidence might be, so this is another reason for removing the first paragraph. Regarding requirements R2 and R4, BPA believes that these two requirements should be combined into a single requirement with two parts. Since both of these requirements deal with performance-based maintenance, it would simplify the standard and improve the flow if they were to be combined. Regarding Table 1-4(f), it is unclear if all of the conditions on the left side need to be met before any of the reduced maintenance activities on the right side are allowed, or if there is a one-on-one relationship between an item on the left and the adjacent item on the right. BPA suggests that the table be reconfigured to clarify the relationship between the conditions on the left and the activities on the right.

Group

PacifiCorp

Sandra Shaffer

Yes

See comments under #4.

Yes

See comments under #4.

1: The definition of "Protection System" in this version of PRC-005-2 includes "station dc supply associated with protective functions…" as a Protection System component. Page 83 of the FAQ document accompanying the draft standard provides further clarification that the batteries covered under PRC-005-2 are those that "supply the trip current to the trip coils of the interrupting devices that are a part of the Protection System." This statement in the FAQ is much more limiting than the definition of Protection System and may create confusion concerning registered entities' compliance obligations. For example, a registered entity may have one battery / charger system in a station that supplies DC voltage to communication equipment, including that utilized in transfer trip communication, while a separate battery (typically operating at a different DC voltage) is utilized for relay / trip coil operation. In this case, it is unclear whether the battery / charger system utilized for transfer trip communication is subject to the requirements of the standard. PacifiCorp recommends that NERC or the SDT reconcile this apparent inconsistency in the FAQ document. 2: In Tables 1-4(a) thru 1-4(d), the maximum maintenance interval of four calendar months includes inspection "for unintentional grounds." PacifiCorp seeks clarification on whether this maintenance activity is intended to target the detection of unintentional grounds on the battery bank / rack itself, or a ground located anywhere on the entire DC wiring system. 3: The Violation Severity Level ("VSL") for R5 - which ranges from a failure to correct 5 or less ("Lower" VSL) to greater than 15 ("Severe" VSL) Unresolved Maintenance Issues – fails to adequately account for the cumulative amount of equipment a registered entity is required to maintain pursuant to PRC-005-2. A better alternative approach may be to base the VSL on the cumulative percentage of Unresolved Maintenance Issues that an entity fails to address and correct. Such an approach would be more consistent with the VSLs for R3 and R4, which are based on a percentage of the total scheduled maintenance. This approach more fairly and reasonably addresses the covered

maintenance activities relative to the approach in the VSLs for R5. which are based on a strict count and therefore independent of the cumulative amount of maintenance activities performed by a registered entity. PacifiCorp recommends that the SDT develop an alternative method for determining VSLs for R5 that reflects the scope of an entity's maintenance activities and the resulting Unresolved Maintenance Issues managed by an entity.
Individual
PNM Resources
Yes
Yes
Yes
PNM Resources appreciate the outstanding work of the SDT! We offer two comments for consideration by the SDT. 1) We believe that the 6 Calendar Month battery cell/unit internal ohmic value measurement for VRLA Batteries may be more frequent than we believe is necessary to maintain reliability. PNM has witnessed no significant failure patterns with VRLA batteries in our system and we currently do impedance testing of all Transmission Station Batteries on a 2-year basis. 2) We also believe that system constraints could arise that will make it difficult to "verify all paths of the trip circuits inclusive of all auxiliary relays through the trip coil(s) of the circuit breakers or other interrupting devices" as specified in Table 1-5 for "unmonitored control circuitry associated with protective functions inclusive of all auxiliary relays". Thank you for your consideration.
Individual
Los Angeles Department of Water and Power
Yes
Yes
Yes
LADWP notices that the terms "Unresolved Maintenance Issue" and "maintenance-correctable issue" are used in several places. We recognize that "Unresolved Maintenance Issue" is defined as a deficiency identified during a maintenance activity that causes the component to not meet the intended performance and requires follow-up corrective action. Please define "maintenance-correctable issue" and clarify the differences between the two terms.
Group
PPL Supply NERC Registered Organizations
Annette M. Bannon
Yes
No
1. The maximum maintenance intervals in PRC-005-2 of 4 calendar months and 18 calendar months are not compatible with computerized maintenance-planning programs based on periodicity rather than elapsed time from the previous check. This situation could be addressed in a conservative fashion by performing work quarterly instead of at 4-month intervals, and annually in place of 18-month periods, which also provides often-needed flexibility as to scheduling the tasks. Inspections performed in April for Q2 and September for Q3 would not meet NERC's 4 calendar month criterion, however, and a similar problem exists for annual checks. The more-stringent compliance jeopardy cited above has therefore not been fully addressed. We recommend changing the 4 calendar months and 18 calendar months intervals to quarterly and annually respectively. 2. We consider addition of the expression, "causes the component to not meet the intended performance," to the previous draft's definition of Unresolved Maintenance Issues (UMIs) to constitute a step backwards, because of the unavoidable subjectivity involved in deciding whether or not a battery or other protection system device is unable to perform as intended. A battery with some "sparkle" on the plates due to sulfation would still be able to perform adequately, for example, making this an issue to watch but not an UMI. It is impractical to provide strict, quantitative, UMI-threshold performance limits for every piece of equipment in a Protection System and every situation that may arise, however. The concept of an UMI has some appeal from a common-sense point of view; but as a regulation it is impractical and, given the breadth of the topic at hand, is likely to remain so regardless of alternative phrasing that might be attempted.
No
We recommend that the final sentence of M3 and M4 be changed to, "Any of the following constitutes sufficient evidence: dated maintenance records, dated maintenance summaries, dated check-off lists, dated inspection records, dated work orders, or other equivalent documentation," and that the slightly different final sentence of M5 be similarly changed.
Although we have provided some suggested changes in these comments, PPL Generation entities voted in favor of this

version. We thank the SDT for the effort on this project and believe that the SDT has developed a revision that improves on many aspects of the existing version of PRC-005.
Group
MRO NSRF
WILL SMITH
Yes
Yes
No
Section 5.1 (second paragrath, under the first bullet) states: “TBM can include review of recent power system events near the particular terminal. Operating records may verify that some portion of the Protection System has operated correctly since the last test occurred. If specific protection scheme components have demonstrated correct performance within specifications, the maintenance test time clock can be reset for those components.” If this “actual event” can be used as proof that the Protection System operated correctly, then this should be added to M3 in the Measures section of PRC-005-2. Seciton 2.4.1 – Sudden Pressure Relays – This question should be clarified that circuits from only EHV transformers should be considered in scope. As highlighted by the NERC GMD reports EHV transformers (345, 500 & 765 kV) are critical. In addition, circuits that do not actually trip a breaker (panel lights, alarms, etc.) should not be included in the scope of components included in the maintenance and testing program.
• Article 4.2.1 –The NSRF believes that this article should be revised to say”Protection Systems installed for the purpose of protecting BES Elements only and detecting Faults on BES Elements. Protection Systems designed to protect non-BES elements that incidentally open 100 kV and greater breakersare excluded from the scopte of PRC-005-2”. This makes it very clear what is included in the scope of the Testing and Maintenance program and what is not. • Change the text of “Standard PRC-005-2 – Protection System Maintenance” Table 1-5 on page 21, Row 1, Column 3 From “Verify that each trip coil is able to operate the circuit breaker, interrupting device, or mitigating device” to: “Verify that a trip coil is able to operate the circuit breaker, interrupting device, or mitigating device.” Or alternately, “Electrically operate each interrupting device every 6 years” Trip coils are designed to be energized no longer than the breaker opening time (3-5 cycles). They are robust devices that will successfully operate the breaker for 5,000-10,000 electrical operations. The most likely source of trip coil failure is the breaker operating mechanism binding, thereby preventing the breaker auxiliary stack from opening and keeping the trip coil energized for too long of a time period. Therefore, trip coil failure is a function of the breaker mechanism failure. Exercising the breakers and circuit switchers is an excellent practice. Exercising the interrupting devices would help eliminate mechanism binding, reducing the chance that the trip coils are energized too long. The language as currently written in Table 1-5 row 1, will also have the unintentional effect of changing an entities existing interrupting device maintenance interval (essentially driving interrupting device testing to a less than 6 year cycle). The NSRF believes that as written the testing of “each” trip coil will result in the increased amount of time that the BES is in a less reliable system configuration. The NSRF hopes that the SDT will consider these changes. • The NSRF recommends the statement “Excluding distributed UFLS and distributed UVLS (see Table 3)” be added to the top of Table 1-4(f). • Table 3. There will be many DP’s that have distributed UFLS (or UVLS) solely on the distribution system (less than 100 kV). The only item these DP’s will have to verify under Table 3 “Protection System dc supply” is the Protection System dc supply voltage. Yet, the new definition of Protection System, as it relates to dc supply is ”Station dc supply associated with protective functions (including batteries, battery chargers, and non-battery-based dc supply)”. Our interpretation of Table 3 and Section 15.7 of the Supplementary Reference & FAQ document is that a DP need only check the dc supply voltage at the terminals of the relays. If that is the SDT interpretation as well, we recommend revising Table 3 of the standard to reflect that. Table 3 contains issues that need to be addressed in a similar fashion as discussed for non-UFLS and non-UVLS systems, i.e. Table 1-1. Comparison to independent sources is only one way to check for a reliable AC measuring device. It also appears that monitoring capabilities are not being given any credit in regards to the AC sensing devices, DC supply, or control circuitry themselves. There should be no difference in the way these systems are treated compared to BES Protection Systems. • In Section D Compliance, Article 1.3, paragraph 4 the standard requires documentation be kept for the “. . .two most recent performances of each distinct maintenance activity. . .”. This needs to clarified that it cannot go back before 06/18/07, as evidenced by the suspension of CAN-0008. Also with some of the testing intervals being 12 years, that would dictate a Registered Entity maintain 24 years of records, which is unreasonable. This article should be revised to have documentation for the most current testing interval, if after 06/18/07. • It is understood that lockout relay testing is important as unexercised lockouts can stick and cause regional outages as experienced at Westwing. However, lockout testing by itself is risky and can lead to local outages. If Registered Entities are required to take on the additional risk of testing lockout relays, dispenstation must be granted for outages caused by those tests. The following statement should be included in the standard “No enforcement actions or penalties will result fromoutages caused by relay testing unless a Registered Entity shows a history of 3 or more test related outages per year for 5 years.” • In the VSL for Table 4 it seems that the phrase “5% or less” should be “not more than 5%”. With the original language it seems like an entity could be found to have an R4 lower VSL violation for “failure” of zero meaning they had done no testing. This VSL is written in the negative and should be rewritten in the positive. • The drafting team needs to clarify “maintenance summaries” as stated in Measure M3. This is an ambiguous term that could be interpreted differently amongst entities. If a term such as ‘summary’ is to be utilized within the standard, a clear definition of what the term is, what it pertains to, where it is located, etc. needs to be included.The NSRF recommends that “maintenance

summaries" be defined and included in the "Definition of Terms used in Standard" section. • Footnote 1 in the Table sections would be much improved by inserting an example similar to what was provided in Section 8.4 of the Supplemental Reference and FAQ document . • Additional methods of verification should be allowed for AC measurement monitoring other than simply performing comparison to an independent source. For example, a sudden rate of change in calculated relay MW analog value and/or 3Io calculation would give way towards a bad CT and/or path. Loss of potential logic is available in most microprocessor relays today, which is very reliable logic for determining PT/CCVT issues. Consideration should be given to utilities that are capable of performing this type of monitoring in order to allow them to reach that next level of attributes. • Please clarify why input/output verification is excluded from the highest level of monitoring related to communications systems (Table 1-2). The way the monitoring attribute is listed does not provide that these will operate when needed. Recommend language be added similar to the monitoring of inputs and outputs described in the relay section (Table 1-1). • Table 1-3 should take into account the same concepts mentioned above in regards to AC measurement verification in Table 1-1. There are alternative ways to verify these quantities while still ensuring reliable operation. As such, companies should be given the opportunity to implement them. Additionally, credit should be given to circuit monitoring and alarming in AC circuits with electromechanical relays. If a transducer/alarming relay is placed in the circuit and monitoring is alarmed appropriately, the health of the AC sensing device can be determined. This would essentially provide the same level assurance as mentioned with the microprocessor relays. • Clarification is needed on the last row of Table 1-5. Does integrity entail monitoring and alarming of every individual path, if necessary, or is overall integrity sufficient? This statement is once again open to interpretation and leaves the entity at the mercy of the auditor.

Group

ACES Power Marketing Standards Collaborators

Jason Marshall

Yes

Is the use of parentheticals within another set of parentheticals in Part 1.1 intentional? It is unusual to do this and a little confusing.

Yes

We agree the changes will benefit reliability by allowing a registered entity to have shorter maintenance cycles without the potential for compliance violations associated with missing their shorter maintenance cycle. Requirement R5 should be modified to focus on what is to be accomplished. As it is written now, the requirement is essentially focused on compliance by using "shall demonstrate efforts". Compliance is about demonstrating or presenting evidence that the requirement has been met. The purpose of the requirement is to correct Unresolved Maintenance issues. We suggest changing the wording to: "shall initiate resolution of Unresolved Maintenance Issues."

Yes

The first part of definition of a Countable Event should be modified as follows: "The failure of a Component such that it requires repair or replacement…". As it is currently worded, it is technically counting the Component as the Countable Event and not the failure of the component. Considering that the other two items that are Countable Events are conditions and misoperations, it seems appropriate to make failure the Countable Event. Application of this standard to UFLS is problematic as worded in Section 4.2.2. The UFLS are only applicable if "installed per ERO underfrequency load-shedding requirements". Technically, no UFLS fits this description because there are no ERO requirements to have a UFLS. PRC-006-0 was never approved by the Commission and is not enforceable. The Commission considered it a "fill-in-the-blank" standard. While PRC-006-1 corrects the "fill-in-the-blank" issues and was approved by the NERC BOT November 4, 2010, the Commission has yet to act on it. The data retention requirement for the Protection System Maintenance Program documentation seems excessive. The Data Retention section states that all versions since the last compliance audit must be maintained. Since TOs, GOs, and DPs are all on six year audit cycles, this would require maintaining this documentation for six years. Is this really necessary? The length could become even greater once NERC implements registered entity assessments that could shorten or lengthen the periods between compliance audits. The data retention requirements for Requirements R2, R3, R4, and R5 are not consistent with NERC Rules of Procedure. Section 3.1.4.2 of Appendix 4C – Compliance Monitoring and Enforcement Program states that the compliance audit will cover the period from the day after the last compliance audit to the end date of the current compliance audit. The data retention requirements compel the registered entity to retain documentation for the longer of "the two most recent performances of each distinct maintenance activity for Protection System Components, or all performances of each distinct maintenance activity for the Protection System Component since the previous scheduled audit date". While it may have been intended to apply to both clauses, the "since the previous scheduled audit date" only applies to the second clause. Since some of the maintenance activities have intervals of 12 years, this would require the registered entity to retain documentation for 24 years which cannot be audited since it is outside the audit window per the Rules of Procedures. At a minimum, we suggest clarifying that the documentation must not be maintained past the day after the last audit completion date. In the fourth paragraph of the Data Retention section, Component is not used consistently. It is used in both singular and plural form. It seems like it should be one or the other. Requirement R1 VSLs: For the High VSL, "entities'" should be "entity's" to be consistent with the other VSLs. It is not clear why missing three component types jumps to a Severe VSL. Missing two is a Moderate VSL. Missing three should be a High VSL.

Group

Arizona Public Service Company

Janet Smith
Yes
No
The standard does not provide basis for the enumerated “maximum allowable interval that is appropriate to the type of the protection system and its impact on the reliability of the Bulk-Power System.” An example of such an approach is the Standard Technical Specifications in use by the nuclear power industry; e.g., NUREG 1432, volume 2. While we are supportive of the changes the SDT has made, APS is concerned the draft Standard will not give entities the flexibility to continue to improve reliability based on changing industry norms and best practices. When technology changes for the better, industry will need the flexibility to optimize use of the new technology while still maintaining an appropriate level of reliability. Lack of defined bases for intervals will prevent technically sound revision to maintenance practices.
No
Either the FAQ or the Standard should define the bases for each interval mandated. See the response to question 2 for further details.
Individual
EPRI
No
My comments are not to the point of dividing the requirements but the guidance in the PSMP tables are not technically valid for maintaining stationary battery cells. Internal ohmic measurements are related to the condition of an individual cell and not a battery bank. Also, there is not a direct correlation to ohmic measurements and battery or cell capacity. Ohmic measurements can provide an indication of a problem cell and point to a cell that should be tested. There also seems to be a misconception as to the type of capacity test that should be required. There are typically two types of tests done on batteries: service tests and performance tests Service test are done to determine a a battery (group of cells) can meet its duty cycle whereas, a performance test is intended to test a battery against the manufacturers curve to make a determination of when the battery should be replaced. A battery could technically still met its duty cycle but have reduced capacity. This simply means that the sizing was done properly, maintenace is timely, and there should be a timely replacement of the cells.
No
See comments in question 1
No
see comments in question 1
The drafting time should see the opinion of the IEEE Stationary Battery Committee before this standard is rolled out for implementation.
Individual
Constellation/Exelon
No
While we are fine with the structural change to separate the requirements out further, we have concerns with the content of the requirements. R5/M5 • M5 needs further clarity to reflect the intended compliance obligation for R5. In previous comments, Constellation expressed concern that compliance obligation for R5 implied a greater level of completion in attending to an identified “deficiency.” We pointed out that the severity of the “deficiency” found will dictate the method and timing of a “follow up correction action”. In response to the comment, the SDT stated that “PRC-005-2 only requires the entity “… initiate resolution” of the issue found.” The SDT revision of R5 and M5 is an improvement; however, changes to M5 are needs to clarify that efforts to correct do not require demonstration that those efforts have concluded. • A revision to the language will clarify the SDT intent. Please consider use of the following language: R5. Each Transmission Owner, Generator Owner, and Distribution Provider shall correct or initiate resolution of identified Unresolved Maintenance Issues. [Violation Risk Factor: Medium] [Time Horizon: Operations Planning] M5. Each Transmission Owner, Generator Owner, and Distribution Provider shall have evidence that it has initiated resolution of, or corrected, identified Unresolved Maintenance Issues in accordance with Requirement R5. The evidence for initiated resolution may include but is not limited to work orders for future resolution, project schedules for future resolution, or other documentation of future plans. The evidence for corrected Unresolved Maintenance Issues may include but is not limited to replacement Component orders, invoices, return material authorizations (RMAs) or purchase orders.
Constellation/Exelon thanks the drafting team for the hard work on the PRC-005 standard. The standard language made significant progress; however, below are outstanding issues of concern: Table 1-3 • Table 1-3 should not include current transformers (CTs). The tests mandated by this draft seeks to measure that a signal is “provided to the protective relay” however, for CT’s this test merely confirms that a signal is sent, not that it reached the correct protective relay. • The maintenance activity in Table 1-3 for PTs and CTs as they relate to electro mechanical relays should be left to the discretion of the Generator Owner. In order to meet the required activity specified in PRC-005-2

draft 2 Table 1-3, the generating unit would be required to take readings with meters while the unit is operating. This practice introduces a risk of tripping the unit inadvertently. The risk of tripping the unit while performing this maintenance activity is contrary to the intended purpose of PRC-005 and introduces a potentially adverse affect on the reliability of the BES. Such testing is not recommended by suppliers. Battery Testing • The Tables describing battery testing could be consolidated into less granular breakdown and thus alleviate some of the associated compliance burden and avoid potential confusion. • Further to battery testing, given the quantity of batteries and the shorter interval cycles, the four calendar month requirement for batteries is too rigid as a firm four months. Similar to how a definition of annual can have a boundary such as within 9 to 16 months, battery testing intervals should allow a boundary such as "three times per year and not more than 6 months between each and average intervals not exceeding four months." • Please confirm that references throughout Standard to battery/batteries relate to the entire battery bank and not to the individual battery cells unless specifically mentioned. Similarly, battery charger maintenance activity should relate to the battery charger in its entirety and not to individual parts or components. Auto Synchronizing Systems and Relays • The drafting team should clarify in the language that testing of auto synchronizing systems and relays is excluded. Applicability • To make 4.2.5.4 under Facilities more clear, please remove the term "generator-connected". • When the SDT changed the original PRC-005 applicability language from "…affecting the reliability of the BES…" to the new 4.2.1 language "…that are installed for the purpose of detecting faults on BES elements (lines, buses, transformers, etc.)", they opted to exclude the second half of this sentence taken from the PRC-005-1a Interpretation, which read "…and trips an interrupting device that interrupts current supplied directly from the BES." By doing so, the SDT failed to recognize that some Protection Systems can be responsive to faults on the BES, but still have no effect on the reliability of the BES. The change in 4.2.1 may unintentionally expand the scope of PRC-005. Depending on how Section 4.2.1 is interpreted, it could create a perverse incentive to disable, or not apply, reverse directional protection on the secondary (at voltages less than 100kV) of radially connected load-serving transformers. Such relaying typically uses available units in a multifunction device, and while not critically necessary for fault clearing, it is applied because it adds a benefit at no incremental cost with minimal security risk, and it will not interrupt a BES element if it operates insecurely. It also improves reliability to connected distribution load, in the event a BES transmission line faults during abnormal switching, by coordinating with non-directional overcurrent relays that would otherwise interrupt the entire load. Furthermore such directional relaying would only operate after the faulted BES line is already removed from any connection at BES voltages via its high voltage (>100kV) circuit breakers. Viewed in an expansive way, the proposed 4.2.1 language could bring into scope these relays as well as tripping circuits of distribution voltage circuit breakers that are normally operated in a radial configuration. It would be reasonable for a TO to disable this relaying, rather than accept these consequences. In the previous comment period (Sept 2011), industry raised similar concerns and to most of the commenters, the SDT responded with the following statement: "The SDT believes that the Applicability as stated in PRC-005-2 is correct and that it supports the reliability of the BES. The SDT observes that the approved Interpretation addresses the term, "transmission Protection System", and notes that this term is not used within PRC-005-2; thus the interpretation does not apply to PRC-005-2. PRC-005-2 specifically addresses "Protection Systems that are installed for the purpose of detecting faults on BES Elements." Please see Section 2.3 of the Supplementary Reference and FAQ document for additional discussion." Unfortunately, this response fails to address the concerns raised above. Entergy previously suggested the following language for 4.2.1: "Protection Systems that are installed for the purpose of detecting faults on BES Elements (lines, buses, transformers, etc.) and trips an interrupting device that interrupts current supplied directly from the BES Elements." This language is appropriate and addresses industry concerns. We ask that the SDT adopt this language as Section 4.2.1. Evidence Retention • It is not necessary and is undesirable to reiterate the language from the NERC Rules of Procedure (Appendix 4C 3.1.4.2) in the standard. Stating such language in two places is redundant and future changes to this section of the Rules of Procedure language will create compliance conflict. • While this language may be recommended for inclusion as new boilerplate-type language for NERC standards and may be used in other recently revised standards, the potential conflict should be taken into account and avoided for PRC-005. The first paragraph in section 1.3 should be removed. • Further, the standard language should dictate data retention relevant to the standard activities and not merely default to the time period in between audits. The Rules of Procedure language enables CEAs to confirm compliance for the full audit period, but the Standard retention language allow for a more reasoned obligation for evidence retention. Specific to this standard, two or three years of evidence for certain components, such as battery tests, is sufficient to demonstrate an entity's PSMP program. • On a positive note, standardizing the requested evidence information is helpful.

Group

Southern Company Generation

Antonio Grayson

Yes

No

The change made to R3 was a good move. Entities should be allowed the flexibility to build grace periods into their maintenance programs to assist them in meeting common national standands for maintenance activities and intervals. If possible, elimination of all possible uncertainty in the auditability of requirement R5 is desired. We prefer eliminating this requirement R5 altogether to the proposed draft that includes a requirement to demonstrate efforts to correct identified unresolved maintenance issues.

Yes

For the 18 month / 6 year activities, it is technically incorrect to allow equivalency between internal ohmic measurements and performance testing. This view is not substantiated by industry experience, documentation, or standards. Additionally, it should be specified to the auditor that the intervals for the battery maintenance are relevant to the component, not the application. This means that if a battery is replaced just before a required 6 year performance test, the 6 year interval for the performance test is reset.
Group
Kansas City Power & Light
Todd Moore
Yes
Yes
Yes
For clarity, change the text of “Standard PRC-005-2 – Protection System Maintenance” Table 1-5 on page 21, Row 1, Column 3 to: “Verify that each a trip coil is able to operate the circuit breaker, interrupting device, or mitigating device.”. Or alternately, “Electrically operate each interrupting device every 6 years”. Countable Event as proposed is somewhat unclear. Recommend the following language: Countable Event – A Component which has failed and requires repair or replacement, any condition discovered during the maintenance activities in Tables 1-1 through 1-5 and Table 3 which requires corrective action, or a Misoperation attributed to hardware failure or calibration failure. Misoperations due to any other reason are not included in Countable Events.

NERC
NORTH AMERICAN ELECTRIC RELIABILITY CORPORATION

Consideration of Comments

Project 2007-17
Protection System Maintenance and Testing

The Project 2007-17 Protection System Maintenance and Testing Standard Drafting Team thanks all commenters who submitted comments on PRC-005-2. These documents were posted for a 30-day public comment period from February 28, 2012 through March 28, 2012. Stakeholders were asked to provide feedback on the standard and associated documents through a special electronic comment form. There were 56 sets of comments, including comments from approximately 118 different people from approximately 98 companies representing 9 of the 10 Industry Segments, as shown in the table on the following pages.

All comments submitted may be reviewed in their original format on the standard's project page:

http://www.nerc.com/filez/standards/Protection_System_Maintenance_Project_2007-17.html

If you feel that your comment has been overlooked, please let us know immediately. Our goal is to give every comment serious consideration in this process! If you feel there has been an error or omission, you can contact the Vice President of Standards and Training, Herb Schrayshuen, at 404-446-2560 or at herb.schrayshuen@nerc.net. In addition, there is a NERC Reliability Standards Appeals Process.[1]

Summary Consideration of all Comments Received:

Definitions:

The SDT revised the "Inspect" element of the definition of Protection System Maintenance Program (PSMP) to: "Examine for signs of component failure, reduced performance or degradation."

The definition of the term 'Unresolved Maintenance Issue' has been enhanced for additional clarity. The definition now reads: "A deficiency identified during a maintenance activity that causes the component to not meet the intended performance, cannot be corrected during the maintenance interval, and requires follow-up corrective action."

[1] The appeals process is in the Reliability Standards Development Procedures: http://www.nerc.com/standards/newstandardsprocess.html.

The definition of Countable Event was modified to: "A failure of a Component requiring repair or replacement, any condition discovered during the maintenance activities in Tables 1-1 through 1-5 and Table 3 which requires corrective action, or a Misoperation attributed to hardware failure or calibration failure. Misoperations due to product design errors, software errors, relay settings different from specified settings, Protection System Component configuration errors, or Protection System application errors are not included in Countable Events." This change was acknowledged in Attachment A.

Applicability:

The SDT revised Applicability Clause 4.2.5.4 to: "Protection Systems for station service or excitation transformers connected to the generator bus of generators which are part of the BES, that act to trip the generator either directly or via lockout or tripping auxiliary relays."

Requirements:

A minor editorial change was made to Requirement R1 to remove the nested parentheticals.

Tables

In Table 1-2, the interval for the second portion of the first row of the table was changed from six years to 12 years, and extensive changes were made to the last row of the table.

Several activities within Table 1-4a, Table 1-4b, Table 1-4c, Table 1-4d, and Table 1-4f, relating to verification that the station battery can perform properly, were modified with the assistance of representatives of the IEEE Stationary Battery Committee.

Measures

Measure M5 has been revised to include: "…project schedules with completed milestones …"

VSLs

In the High VSL for R1, "entities'" was corrected to "entity's".

The VSLs for Requirement R2 were modified from "reduce Countable Events to less than 4%" to "reduce Countable Events to no more than 4%".

Supplementary Reference Document

Complementary changes were made to the Supplementary Reference Document corresponding to all changes to the standard.

Unresolved Minority Views:

- A few commenters continued to object to the establishment of maximum allowable intervals for the maintenance of various Protection System component types. The SDT continued to respond that FERC Order 693 and the approved SAR direct the SDT to develop a standard with maximum allowable intervals comments and minimum maintenance activities. The SDT believes that the

intervals established within the tables are appropriate as continent-wide maximum allowable intervals.

- Several commenters were concerned that an entity has to be "perfect" in order to be compliant; the SDT responded that NERC standards currently allow no provision for any degree of non-performance relative to the requirements.

- Several commenters continued to question NERC's propriety of including distribution system Protection Systems, almost all related to UFLS/UVLS. The SDT obtained a position from NERC legal staff, and cited this position in responding that these devices are, indeed, within NERC's authority because they are installed for the reliability of the BES.

- A few commenters questioned the inclusion of the dc control circuitry for sudden pressure relays, even though the relays themselves are excluded from the definition of "Protection System;" the SDT reiterated its position that this dc control circuitry is included because the dc control circuitry is associated with protective functions.

- A few commenters objected to the language in the Data Retention section regarding the retention of the maintenance records for two full intervals. The SDT explained that this expectation is consistent with the Compliance Monitoring and Enforcement Program.

- Several commenters suggested removal of Requirement R5, and others expressed concerns regarding Requirement R5 and Unresolved Maintenance Issues. The SDT explained its rationale for the requirement as drafted; and made a minor change to Unresolved Maintenance Issues, as detailed above.

Index to Questions, Comments, and Responses

1. In response to comments, the PSMTSDT revised Requirement R1 to state that an entity's Protection System Maintenance Program (PSMP) shall include, for each Protection System component type, an identification of the maintenance method(s) used, and the identification of the relevant monitoring attributes applied. Do you agree with this change? If you do not agree, please provide specific suggestions for improvement. 13
2. As a result of the changes to Requirement R1, the previous Requirement R3 was separated into three requirements:
   a. Requirement R3 now requires that an entity utilizing a time-based program maintain its Protection System components in accordance with the maximum maintenance intervals listed in the Tables. This change removes the compliance jeopardy associated with an entity having more stringent intervals (in its PSMP) than those listed in the Tables
   b. Requirement R4 (new) requires an entity utilizing a performance-based program maintain its Protection System components in accordance with its performance based Protection System Maintenance Program
   c. Requirement R5 (new) requires an entity to demonstrate efforts to correct identified unresolved maintenance issues. The previous language in Requirement R3 directed that an entity initiate resolution

   Do you agree with this change? If you do not agree, please provide specific suggestions for improvement. 26
3. The Supplemental Reference and FAQ document was revised to reflect changes made to the draft standard and to address additional issues raised. Do you agree with the changes? If you do not agree, please provide specific suggestions for improvement. 49
4. If you have any other comments on this Standard that you have not already provided in response to the prior questions, please provide them here. 64

The Industry Segments are:

1 — Transmission Owners
2 — RTOs, ISOs
3 — Load-serving Entities
4 — Transmission-dependent Utilities
5 — Electric Generators
6 — Electricity Brokers, Aggregators, and Marketers
7 — Large Electricity End Users
8 — Small Electricity End Users
9 — Federal, State, Provincial Regulatory or other Government Entities
10 — Regional Reliability Organizations, Regional Entities

Group/Individual		Commenter	Organization	Registered Ballot Body Segment									
				1	2	3	4	5	6	7	8	9	10
1.	Group	Guy Zito	Northeast Power Coordinating Council										X

1.	Alan Adamson	New York State Reliability Council, LLC	NPCC	10
2.	Greg Campoli	New York Independent System Operator	NPCC	2
3.	Sylvain Clermont	Hydro-Quebec TransEnergie	NPCC	1
4.	Chris de Graffenried	Consolidated Edison Co. of New York, Inc.	NPCC	1
5.	Gerry Dunbar	Northeast Power Coordinating Council	NPCC	10
6.	Mike Garton	Dominion Resources Services, Inc.	NPCC	5
7.	Kathleen Goodman	ISO - New England	NPCC	2
8.	Chantel Haswell	FPL Group, Inc.	NPCC	5
9.	David Kiguel	hydro One Networks Inc.	NPCC	1
10.	Michael R. Lombardi	Northeast Utilities	NPCC	1
11.	Randy MacDonald	New Brunswick Power Transmission	NPCC	9
12.	Bruce Metruck	New York Power Authority	NPCC	6
13.	Lee Pedowicz	Northeast Power Coordinating Council	NPCC	10

Group/Individual	Commenter	Organization	Registered Ballot Body Segment									
			1	2	3	4	5	6	7	8	9	10
14. Robert Pellegrini	The United Illuminating Company	NPCC 1										
15. Si-Truc Phan	Hydro-Quebec TransEnergie	NPCC 1										
16. David Ramkalawan	Ontario Power Generation, Inc.	NPCC 5										
17. Brian Robinson	Utility Services	NPCC 8										
18. Saurabh Saksena	National Grid	NPCC 1										
19. Michael Schiavone	National Grid	NPCC 1										
20. Wayne Sipperly	New York Power Authority	NPCC 5										
21. Tina Teng	Independent Electricity System Operator	NPCC 2										
22. Donald Weaver	New Brunswick System Operator	NPCC 2										
23. Ben Wu	Orange and Rockland Utilities	NPCC 1										
24. Peter Yost	Consolidated Edison Co. of New York, Inc.	NPCC 3										
2. Group	Jim Eckelkamp	Progress Energy										
No additional members listed.												
3. Group	Kent Kujala	DTE Energy			X	X	X					
1. Steven Kerkmaz	RFC 3, 4, 5											
2. David Szulczewski	RFC 3, 4, 5											
4. Group	WILL SMITH	MRO NSRF	X		X		X	X				
1. MAHMOOD SAFI	OPPD MRO 1, 3, 5, 6											
2. CHUCK LAWRENCE	ATC MRO 1											
3. TOM WEBB	WPS MRO 3, 4, 5, 6											
4. JODI JENSON	WAPA MRO 1, 6											
5. KEN GOLDSMITH	ALTW MRO 4											
6. ALICE IRELAND	XCEL(NSP) MRO 1, 3, 5, 6											
7. DAVE RUDOLPH	BEPC MRO 1, 3, 5, 6											
8. ERIC RUSKAMP	LES MRO 1, 3, 5, 6											
9. JOE DEPOORTER	MGE MRO 3, 4, 5, 6											
10. SCOTT NICKELS	RPU MRO 4											
11. TERRY HARBOUR	MEC MRO 3, 5, 6, 1											
12. MARIE KNOX	MISO MRO 2											

Group/Individual	Commenter	Organization	Registered Ballot Body Segment									
			1	2	3	4	5	6	7	8	9	10
13. LEE KITTELSON, OTP, MRO, 1, 3, 4, 5 14. SCOTT BOS, MPW, MRO, 1, 3, 5, 6 15. TONY EDDLEMAN, NPPD, MRO, 1, 3, 5 16. MIKE BRYTOWSKI, GRE, MRO, 1, 3, 5, 6 17. THERESA ALLARD, MPC, MRO, 1, 3, 5, 6												
5. Group	Kieth Morisette	Tacoma Public Utilities										
No additional members listed.												
6. Group	Jesus Sammy Alcaraz	Imperial Irrigation District (IID)	X		X	X	X	X				
1. Jose Landeros, IID, WECC, 1, 3, 4, 5, 6 2. Epi Martinez, IID, WECC, 1, 3, 4, 5, 6 3. Nando Gutierrez, IID, WECC, 1, 3, 4, 5, 6												
7. Group	Louis Slade	Dominion					X	X				
1. Michael Gildea, NERC Compliance Policy, RFC, 5, 6 2. Michael Crowley, Electric Transmission, SERC, 1, 3 3. Sean Iseminger, Fossil & Hydro, SERC, 5 4. Chip Humphrey, Fossil & Hydro, MRO, 5 5. Jeff Bailey, Nuclear, 5 6. Connie Lowe, NERC Compliance Policy, SERC, 5, 6 7. Mike Garton, NERC Compliance Policy, NPCC, 5, 6												
8. Group	Don Jones	Texas Reliability Entity										X
1. Curtis Crews, Texas RE, ERCOT, 10 2. David Penney, Texas RE, ERCOT, 10												
9. Group	Jonathan Hayes	Southwest Power Pool Standards Development Team	X			X						
1. John Allen, City Utilities of Springfield, SPP, 1, 4 2. Greg Froehling, Rayburn Electric, SPP 3. Louis Guidry, CLECO, SPP, 1, 3, 5 4. Jonathan Hayes, Southwest Power Pool, SPP, 2 5. Robert Rhodes, Southwest Power Pool, SPP, 2												

Group/Individual	Commenter	Organization	Registered Ballot Body Segment									
			1	2	3	4	5	6	7	8	9	10
6. Robert Hirchak	CLECO	SPP 1, 3, 5										
7. Brandon Nugent	CLECO	SPP 1, 3, 5										
8. Valerie Pinamonti	AEP	SPP 1, 3, 5										
9. Mahmood Safi	OPPD	SPP 1, 3, 5										
10 Group	Dave Davidson	Tennessee Valley Authority										
1. Rusty Hardison	Transmission O&M	SERC NA										
2. Pat Caldwell	Transmission O&M - Relay	SERC NA										
3. Paul Barnett	Transmission O&M - Substation	SERC NA										
4. Jerry Finley	Power Control Systems	SERC NA										
5. Frank Cuzzort	Nuclear Engineering	SERC NA										
6. Robert Brown	Nuclear Engineering	SERC NA										
7. Robert Mares	Hydro Engineering	SERC NA										
8. Annette Dudley	Hydro O&M	SERC NA										
9. John Henry Sullivan	Fossil Engineering	SERC NA										
10. David Thompson	Compliance	SERC NA										
11 Group	Sam Ciccone	FirstEnergy	X									
1. Jim Kinney	FE	RFC 1										
2. Brian Orians	FE	RFC 5										
3. Rusty Loy	FE	RFC 5										
4. Shawn Gehring	FE	RFC 1										
5. Doug Hohlbaugh	FE	RFC 1, 3, 4, 5, 6										
6. Bill Duge	FE	RFC 5										
7. Chris Lassak	FE	RFC 5										
8. Mike Ferncez	FE	RFC 1										
9. Tim Sheerer	FE	RFC 1										
12 Group	Ron Sporseen	PNGC Comment Group			X							
1. Joe Jarvis	Blachly-Lane Electric Cooperative	WECC 3										
2. Dave Markham	Central Electric Cooperative	WECC 3										
3. Dave Hagen	Clearwater Power Cooperative	WECC 3										

Group/Individual	Commenter	Organization	Registered Ballot Body Segment									
			1	2	3	4	5	6	7	8	9	10
4. Roman Gillen	Consumer's Power Inc.	WECC 1, 3										
5. Roger Meader	Coos-Curry Electric Cooperative	WECC 3										
6. Dave Sabala	Douglas Electric Cooperative	WECC 3										
7. Bryan Case	Fall River Electric Cooperative	WECC 3										
8. Rick Crinklaw	Lane Electric Cooperative	WECC 3										
9. Ray Ellis	Lincoln Electric Cooperative	WECC 3										
10. Annie Terracciano	Northern Lights Inc.	WECC 3										
11. Aleka Scott	PNGC Power	WECC 4, 8										
12. Heber Carpenter	Raft River Electric Cooperative	WECC 3										
13. Steve Eldrige	Umatilla Electric Cooperative	WECC 1, 3										
14. Marc Farmer	West Oregon Electric Cooperative	WECC 3										
13 Group	Brandy A. Dunn	Western Area Power Administration										
No additional members listed.												
14 Group	Cole Brodine	Nebraska Public Power District										
No additional members listed.												
15 Group	Frank Gaffney	Florida Municipal Power Agency				X						
1. Timothy Beyrle	City of New Smyrna Beach	FRCC 4										
2. Jim Howard	Lakeland Electric	FRCC 3										
3. Greg Woessner	Kissimmee Utility Authority	FRCC 3										
4. Lynne Mila	City of Clewiston	FRCC 3										
5. Joe Stonecipher	Beaches Energy Services	FRCC 1										
6. Cairo Vanegas	Fort Pierce Utility Authority	FRCC 4										
7. Randy Hahn	Ocala Utility Services	FRCC 3										
16 Group	David Thorne	Pepco Holdings Inc. & Affiliates	X		X							
1. Carlton Bradshaw	Delmarva Power & Light	RFC 1, 3										
17 Group	Chris Higgins	Bonneville Power Administration	X									
1. Dean Bender	WECC 1											
2. Heather Laslo	WECC 1											
3. Brenda Vasbinder	WECC 1											

Group/Individual	Commenter	Organization	Registered Ballot Body Segment									
			1	2	3	4	5	6	7	8	9	10
4. Greg Vassallo WECC 1 5. Mason Bibles WECC 1 6. Jenifur Rancourt WECC 1, 3, 5, 6 7. Rebecca Berdahl WECC 3 8. Jason Burt WECC 1												
18 Group	Sandra ShFaffer	PacifiCorp										
No additional members listed.												
19 Group	Annette M. Bannon	PPL Supply NERC Registered Organizations					X					
1. Leland McMillan PPL Montana, LLC WECC 5 2. Donald Lock PPL Generation, LLC RFC 5												
20 Group	WILL SMITH	MRO NSRF	X		X		X	X				
1. MAHMOOD SAFI OPPD MRO 1, 3, 5, 6 2. CHUCK LAWRENCE ATC MRO 1 3. TOM WEBB WPS MRO 3, 4, 5, 6 4. JODI JENSON WAPA MRO 1, 6 5. KEN GOLDSMITH ALTW MRO 4 6. ALICE IRELAND XCEL(NSP) MRO 1, 3, 5, 6 7. DAVE RUDOLPH BEPC MRO 1, 3, 5, 6 8. ERIC RUSKAMP LES MRO 1, 3, 5, 6 9. JOE DEPOORTER MGE MRO 3, 4, 5, 6 10. SCOTT NICKELS RPU MRO 4 11. TERRY HARBOUR MEC MRO 3, 5, 6, 1 12. MARIE KNOX MISO MRO 2 13. LEE KITTELSON OTP MRO 1, 3, 4, 5 14. SCOTT BOS MPW MRO 1, 3, 5, 6 15. TONY EDDLEMAN NPPD MRO 1, 3, 5 16. MIKE BRYTOWSKI GRE MRO 1, 3, 5, 6 17. THERESA ALLARD MPC MRO 1, 3, 5, 6												
21 Group	Jason Marshall	ACES Power Marketing Standards	X									

Group/Individual		Commenter	Organization	Registered Ballot Body Segment									
				1	2	3	4	5	6	7	8	9	10
			Collaborators										
1. Shari Heino	Brazos Electric Power Cooperative, Inc.	SERC	1										
2. Mohan Sachdeva	Buckeye Power, Inc.	RFC	3, 4										
3. Erin Woods	East Kentucky Power Cooperative	SERC	1, 3, 5										
4. Scott Brame	North Carolina Electric Membership Corporation	RFC	1, 3, 4, 5										
5. Mark Ringhausen	Old Dominion Electric Cooperative	SERC	3, 4										
6. Lindsay Shepard	Sunflower Electric Power Corporation	SPP	1										
7. Clem Cassmeyer	Western Farmers Electric Cooperative	ERCOT	1, 5										
22	Group	Janet Smith	Arizona Public Service Company										
No additional members listed.													
23	Group	Antonio Grayson	Southern Company Generation										
No additional members listed.													
24	Group	Todd Moore	Kansas City Power & Light	X		X		X	X				
1. Tim Hinken	Kansas City Power & Light	SPP	1, 3, 5, 6										
25	Individual	Brenda Frazer	Edison Mission Marketing & Trading	X				X					
26	Individual	Richard Tressler	Alber Corporation										
27	Individual	Russ Schneider	Flathead Electric Cooperative, Inc.			X	X						
28	Individual	Michael Falvo	Independent Electricity System Operator		X								
29	Individual	Joe Tarantino	Sacramento Municipal Utility District	X		X	X	X	X				
30	Individual	Michelle R D'Antuono	Ingleside Cogeneration LP					X					
31	Individual	Daniel Duff	Liberty Electric Power LLC					X					
32	Individual	Joe O'Brien	NIPSCO	X		X		X	X				
33	Individual	Cristina Papuc	TransAlta Centralia Generation LLC					X					
34	Individual	Edward Davis	Entergy Services	X		X		X	X				
35	Individual	Glen Sutton	ATCO Electric Ltd	X									
36	Individual	Thad Ness	American Electric Power	X		X		X	X				
37	Individual	Joe Petaski	Manitoba Hydro	X		X		X	X				

Group/Individual		Commenter	Organization	Registered Ballot Body Segment									
				1	2	3	4	5	6	7	8	9	10
38	Individual	Bo Jones	Westar Energy	X		X		X	X				
39	Individual	Kirit Shah	Ameren	X		X		X	X				
40	Individual	Steve Alexanderson P.E.	Central Lincoln			X	X					X	
41	Individual	Chris Searles	BAE Batteries USA										
42	Individual	Andrew Gallo	City of Austin dba Austin Energy			X	X	X	X				
43	Individual	Chris Searles	BAE Batteries USA								X		
44	Individual	Martin Bauer	US Bureau of Reclamation					X					
45	Individual	Brian J. Murphy	NextEra Energy, Inc.	X		X		X	X				
46	Individual	Patrick Brown	Essential Power, LLC					X					
47	Individual	Andrew Z. Pusztai	American Transmission Company, LLC	X									
48	Individual	Brad Harris	CenterPoint Energy	X									
49	Individual	Anthony Jablonski	ReliabitliyFirst										X
50	Individual	Keira Kazmerski	Xcel Energy	X		X		X	X				
51	Individual	Greg Rowland	Duke Energy	X		X		X	X				
52	Individual	Martin Kaufman	ExxonMobil Research and Engineering	X				X					
53	Individual	Laurie Williams	PNM Resources	X		X							
54	Individual	Mauricio Guardado	Los Angeles Department of Water and Power	X		X		X	X				
55	Individual	Wayne E. Johnson	EPRI										
56	Individual	Maggy Powell	Constellation/Exelon	X		X		X	X				

1. **In response to comments, the PSMTSDT revised Requirement R1 to state that an entity's Protection System Maintenance Program (PSMP) shall include, for each Protection System component type, an identification of the maintenance method(s) used, and the identification of the relevant monitoring attributes applied. Do you agree with this change? If you do not agree, please provide specific suggestions for improvement.**

Summary Consideration: Many commenters were in agreement with this change.

Comments were offered that the definition of PSMP is incongruous with its use in Requirement R1; the SDT disagreed, and noted that the definition of a PSMP is linked to Requirement R1 in that the entity's program shall include one or all of the parameters in the definition. Requirement R1 requires that the entity establish their program, and is the foundation for the standard.

Other comments questioned why Requirement R1 includes the applicable level of monitoring for a Component when this is also listed in the Component attributes within the tables; the SDT explained that the discussion in Requirement R1 is to assure that the monitoring is present to support the intervals and activities used.

The SDT responded to concerns regarding the use, within Requirement R1, of "Component Type" by noting that this term allows entities latitude in how they define their PSMP.

Other commenters noted that Requirement R1 does not require that entities maintain their Components; and is, therefore, administrative and should have a lower VRF. The SDT responded that Requirement R1 is the foundation of the standard; and, therefore, the VRF is appropriate.

The SDT accepted a suggestion to remove the imbedded parenthetical within Requirement R1.

Several comments were submitted that were unrelated to this question.

Organization	Yes or No	Question 1 Comment
Pacific Gas and Electric Company	Negative	PG&E thanks the drafting team for their efforts. PG&E agrees with overall changes to the standard and sees the current draft as an improvement over the prior draft, on which PG&E voted affirmative. PG&E however will vote negative on the current ballot due to recent experience and trouble with trying to implement the intercell connection resistance test for NiCad batteries as specified in Table 1-4c of PRC-005-2. PG&E has experienced trouble trying to implement the "Battery intercell or unit-to-unit connection resistance" maintenance activity for certain NiCad battery types. In

Organization	Yes or No	Question 1 Comment
		these cases the battery post was not exposed and was entirely covered by the intercell strap. The battery post protruded minimally from the battery and could not be accessed with a probe. PG&E requests clarification on this requirement and that provision be provided to accommodate existing battery systems without requiring modification to the battery system. Modification of the battery system to access the battery post places a hardship on the battery owner, may compromise the battery design, and ultimately may require replacing the battery to allow fulfilling the maintenance requirement. One solution may be to allow measuring intercell connection resistance from the battery post bolt when the battery post is not accessible. While this is not the optimal approach, it may still be effective since the presence of corrosion would likely show up between both the battery post and bolt and also between the bolt and intercell strap. Trending the resistance from bolt-to-bolt may still be effective in determining an increasing resistance from post-to-post. PG&E suggests the following language: Table 1-4c Verify - Battery intercell or unit-to-unit connection resistance where battery post is accessible. Where battery post is not accessible measure intercell or unit-to-unit connection resistance from bolt-to-bolt or nearest connection to the battery post.
Response: Thank you for your comment. The SDT believes that the Maintenance Activities in Table 1-4c are explicit as to the required activity and are necessary to ensure the integrity of the station battery. The SDT believes the activity you discuss is not an effective method to satisfy the intent of the requirement in Table 1-4c; and the team suggests that you consult the manufacturer of your battery system to investigate how to meet the requirement.		
Seminole Electric Cooperative, Inc.	Negative	Seminole recommends the SDT re-consider an interval of 12 calendar years for the component in row 2, of Table 1-5. The maximum maintenance interval for "Electromechanical lockout devices which are directly in a trip path from the protective relay to the interrupting device trip coil" should be consistent with the "Unmonitored control circuit" interval which is 12 calendar years. In order to test the lockout relays, it may be necessary to take a bus outage (due to lack of redundancy and associated stability issues with delayed clearing). Increasing the frequency of bus outages (with associated lines or transformers) will also increase the amount of time that the BES is in a less stable system configuration. Increasing the time the BES is in

Organization	Yes or No	Question 1 Comment
		a less stable system configuration also increases the probability of a low frequency, high impact event occurring. We believe that, as written, the testing of "each" trip coil and the proposed maintenance interval for lockout testing will result in the increased amount of time that the BES is in a less intact system configuration. Therefore, the Maximum Maintenance Interval should be 12 years for lockout relays. It appears that the SDT is trying to address a specific type of lockout relay with the 6 year interval that consists of a longer operating rod lockout that is subject to binding when called upon to operate. Why is it necessary to include all lockout relays when only a very specific segment of all lockout relays is subject to this one problem? Maybe a unique category of these specific types of lockouts, subject to operating rod binding should be specified at 6 years, with other lockouts not subject to this problem using a common interval like other protective components of 12 years. We sincerely hope that the SDT will consider these positive changes.
Response: Thank you for your comment. The SDT believes that electromechanical lock-out relays (86) (used to convey the tripping current to the trip coils), regardless of the manufacturer, need to be electrically operated to prove the capability of the device to change state. The application of lockouts is typically associated with equipment limited having remote backup protection (Generators/Transformers) or higher system consequences if remote backup is called upon to operate (Buses/Breakers). A failure of a lockout to function results in decreased stability and has a higher outage impact. These tests need to be accomplished at least every six years, unless PBM methodology is applied. The contacts on the 86 that change state to pass on the trip current to a breaker trip coil need only be checked every 12 years with the control circuitry.		
Tampa Electric Co.	Negative	The requirement to periodically test Control circuits will negatively impact reliability. The possibility of lifted wires being properly re-landed or test links being left open following testing will cause more misoperations than the finding of failed devices prevents. The outages required to do the testing will limit available transmission capability and therefore affect markets negatively for no reliability enhancement.
Response: Thank you for your comment. The SDT believes that periodic testing of control circuits is a vital part of assuring proper		

Organization	Yes or No	Question 1 Comment
operation of a protective relay system. There are several methods of accomplishing this testing. Where portions of the circuit are isolated for testing, procedures should be in place to assure proper restoration of the circuit.		
Tennessee Valley Authority	Negative	1. Regarding the functional test required every 3 months for "unmonitored communication systems" in Table 1-2 of the PRC-005-2 Draft. TVA feels that a Maximum Maintenance Interval for the Functional Test should be every 12 months until auto-checkback has been fully implemented by the utility. 2. The Implementation Plan for PRC-005-2 Step 4 on Page 2 states: "The Implementation Schedule set forth in this document requires that entities develop their revised Protection System Maintenance Program within twelve (12) months following applicable regulatory approvals, or in those jurisdictions where no regulatory approval is required, on the first day of the first calendar quarter twenty-four (24) months following NERC Board of Trustees adoption. This anticipates that it will take approximately twelve (12) months to achieve regulatory approvals following adoption by the NERC Board of Trustees." TVA feels that this is not sufficient time to implement full auto-checkback capability at some utilities. The time schedule of twelve (12) months should be forty-eight (48) months following applicable regulatory approvals
Response: Thank you for your comments. 1) The SDT believes the four-month interval is proper for unmonitored communications systems. The activity related to this interval is to verify basic operating status. 2) The Implementation Plan is intended to facilitate implementation of the standard, not to facilitate modifications to meet the requirements of the standard.		
U.S. Bureau of Reclamation	Negative	1. The definition for PSMP is incongruous with the use of the PSMP in Requirement R1. Requirement R1, including the Measure and VSL focus on the identification of maintenance method of the Component types and not that the PSMP is in fact being used for maintenance of the component. 2. The requirement R5 indicates the entity has to "demonstrate" efforts to correct

Organization	Yes or No	Question 1 Comment
		identified unresolved maintenance issues. The measure M5 described documentation of the efforts. The requirement language should be explicit. Does the standard want a demonstration which implies active role of the entity to prove what it is doing, or to provide documentation of the activities underway to correct deficiencies? The language in the requirement should be altered to "Each Transmission Owner, Generator Owner, and Distribution Provider shall prepare a CAP for each identified Unresolved Maintenance Issue." A second requirement is needed to require that "Each Transmission Owner, Generator Owner, and Distribution Provider shall complete its CAP to correct the identified Unresolved Maintenance Issues." The measures would need to be adjusted accordingly to reflect the CAP and evidence that the entity completed the CAP. 3. Re Terms defined for use only within PRC-005-2: The standard provides definitions which will not be incorporated into the Glossary of Terms. This would allow the definitions as used in this standard to conflict with the definition used in other standards if this practice becomes more widespread and would reduce the cohesiveness of the standard set. 4. Re The definition of Components: The standard defined what constitutes a control circuit as a component type with "Control circuitry associated with protective functions through the trip coil(s) of the circuit breakers or other interrupting devices." The standard then modified the definition by allowing "a control circuit Component is dependent upon how an entity performs and tracks the testing of the control circuitry." The definition should not be dependent upon practice. This makes the definition a fill in the blank definition. Either eliminate the allowance or remove the definition of control circuit.
Response: Thank you for your comments.		

Organization	Yes or No	Question 1 Comment
1. The SDT believes that the definition of a PSMP is linked to Requirement R1 in that the entity's program shall include one or all of the parameters in the definition. Requirement R1 requires that the entity establish their program, and is the foundation for the standard. Requirements R3-R4 address implementation of the entity's PSMP. 2. Management of completion of the identified unresolved maintenance issue is a complex topic that falls outside of the scope of this standard. There can be any number of supply, process and management problems that make setting repair deadlines impossible. The SDT specifically chose the phrase, "demonstrate efforts to correct" (with guidance from NERC Staff) because of the concern that many more complex unresolved maintenance issues might require greater than the remaining maintenance interval to resolve (and yet still be a "closed-end process"). For example, a problem might be identified on a VRLA battery during a six-month check. In instances such as one that requires battery replacement as part of the long-term resolution, it is highly unlikely that the battery could be replaced in time to meet the six-calendar-month requirement for this maintenance activity. The SDT does believe corrective actions should be timely, but concludes it would be impossible to postulate all possible remediation projects; and, therefore, impossible to specify bounding time frames for resolution of all possible unresolved maintenance issues, or what documentation might be sufficient to provide proof that effective corrective action is being undertaken. The definition of "Unresolved Maintenance Issue" has been modified to add a clarifying phrase that the deficiency, "…cannot be corrected during the maintenance interval." 3. The standard specifies that the terms used are intended for this document only; and, therefore, there should not be any conflict with their use in any other PRC standard. 4. The intent of the different means of identifying control circuitry was to accommodate various entities' philosophies on testing of these circuits. Regardless of how an entity chooses to identify their control circuitry, the entity must meet the requirements of the standard regarding maintenance of control circuitry.		
DTE Energy	No	DECo does not agree. With the exception of station batteries, all components should be tested as a scheme to assure that all components are working together as designed, so the PSMP should not be required for each component type.
Response: Thank you for your comment. A PSMP allows for each component within a protective relay scheme to have a differing maintenance interval allowing for unit or station outages. A company's PSMP can perform maintenance on all the components within a particular relay scheme, but that would require the shortest of the maintenance intervals.		
PNGC Comment Group	No	Specifying "by component type" appears confusing. It seems possible that some pieces of equipment from the same component type could end up in a different type of maintenance program. We suggest changing to "by component or component

Organization	Yes or No	Question 1 Comment
		type" when entities determine the maintenance method in their PSMP.
Response: Thank you for your comment. The SDT believes that it is acceptable for an entity to subdivide components within a component type, if desired. The SDT does not want to remove that latitude.		
Nebraska Public Power District	No	1. Since auditors will be able to request documentation necessary to validate the inclusion of the device within the appropriate level of monitoring, why does the program document require listing level of monitoring and component attributes? (Concerned about the burden of maintaining lists of components in a program document that are alike but have different levels of monitoring. Ex: Monitored and unmonitored microprocessor relays) 2. For identification of the relevant monitoring attributes applied can a single specification document suffice for similar relay types such as one document for SEL relays? 3. For trip circuit monitoring can a standard document be used for a group of similar schemes?
Response: Thank you for your comments. See Section 6.1 of the Supplementary Reference and FAQ document for a discussion of this topic. 1. The requirement to list component attributes is designed to support a company's program for the maintenance intervals used. 2. The SDT concurs with using a single specification document for similar equipment. 3. The SDT concurs with a standard document for trip circuit monitoring when consistent practices are present.		
Flathead Electric Cooperative, Inc.	No	1. Specifying "by component type" appears confusing. It seems possible that some pieces of equipment from the same component type could end up in a different type of maintenance program. We suggest changing to "by component or component type" when entities determine the maintenance method in their PSMP. 2. Generally, have concerns with all the new definitions except the NERC

Organization	Yes or No	Question 1 Comment
		definition of Protection System. The approach to creating new definitions of plain language in a standard should be avoided.
Response: Thank you for your comments. 1. The SDT believes it is acceptable for an entity to subdivide components within a component type, if desired. The SDT does not want to remove that latitude. 2. The standard specifies that the terms used are intended for this document only; and, therefore, there should not be any conflict with their use in any other PRC standard.		
American Electric Power	No	R1.1 binds you to the activities in the table, but our system is comprised of elements (such as a Plant Control Systems), that are not included in the table. As a result, it is not clear how an entity could develop an SPS that satisfies both the requirement and our system.
Response: Thank you for your comment. IEEE defines a relay as: "An electric device designed to respond to input conditions in a prescribed manner and after specified conditions are met to cause contact operation or similar abrupt change in associated electric control circuits." The SDT believes that protective relay functions that are embedded in control systems and/or SPSs are a part of this standard and are, therefore, under the same requirements as dedicated, stand-alone protective relays. It is left to the entity to determine how to align these requirements with operational concerns.		
Manitoba Hydro	No	Please see comments provided in Question 4.
US Bureau of Reclamation	No	The requirement R1 states that the PSMP must identify how the component is to be maintained, using time based or performance based or a combination. While R1 requires a PSMP, there is no measure that the PSMP is used for actually maintaining the components, other than for documenting which maintenance method is being used. The purpose of R1 is therefore administrative. Since there is no measure for the use of the PSMP, why is the entity required to develop the PSMP as defined? There is no VSL for R1 which requires that the entity establish a PSMP. Since there is no severity level associated a PSMP that does not contain one of the required activities it supports elimination of the definition of PSMP. PSMP definition is also weak and does not match with the VSL that the PSMP identify the maintenance method of the protection system component types. The definition is that PSMP

Organization	Yes or No	Question 1 Comment
		which must include: "A maintenance program for a specific component includes one or more of the following activities: o Verify- Determine that the component is functioning correctly. o Monitor - Observe the routine in-service operation of the component. o Test - Apply signals to a component to observe functional performance or output behavior, or to diagnose problems. o Inspect - Detect visible signs of component failure, reduced performance and degradation. o Calibrate- Adjust the operating threshold or measurement accuracy of a measuring element to meet the intended performance requirement." Since requirement 1 essentially only requires identification of which maintenance method is to be used, there is no need for the definition. It no longer matters how the device's functionality is determined as long as it is performed on a time based or performance based method. This approach may be lowering the reliability level associated with the protection system maintenance. Since the definition of PSMP is that only one of the 5 activities is needed, is seems that one could select to "Monitor" the in-service operation of the component on a time base and no further action is needed. So that could mean observe that the relay has power and was not misoperating every six years and maintenance is performed. A PSMP is as defined does not help the reliability. It would be better require the PSMP include as a minimum all five activities defined as well as defining the maintenance method used (time based, performance based, or a combination). There needs to be a requirement that the PSMP needs to be developed. Then Requirement 1 would be to implement the PSMP.
Response: Thank you for your comments. Requirement R1 requires that the entity establishes a PSMP (with the specified attributes), and is the foundation for the standard; thus, Requirement R1 is not administrative, as without a PSMP, there is nothing on which to base the remainder of the standard. Requirements R3-R4 address implementation of the entity's PSMP.		
ExxonMobil Research and Engineering	No	As written, the current draft of PRC-005-2 discriminates against smaller entities that do not have a population size of 60 for each component type. Historical records provide an accurate account of how specific components have performed in their installed environment. For a set population size, increasing the number of historical data points should improve the accuracy of an entity's calculated mean time between failures, so, if you increase the period over which the historical data must

Organization	Yes or No	Question 1 Comment
		be evaluated, you can compensate for a smaller segment population size. The SDT's current draft prevents smaller entities from using a larger historical data set to make up for a smaller population size when developing a performance based protective system maintenance and testing program. The SDT should reconsider allowing smaller entities to use historical records that extend for period longer than a single year in the development of a performance based program .
Response: Thank you for your comment. Small entities are permitted to aggregate their components with similar components of other entities to meet the component populations, as long as the programs are (and remain) similar – See Section 9 of the Supplementary Reference and FAQ document and the associated footnote to Attachment A. Decreasing the component population below the requirements of Attachment A will result in an unsound program due to component populations that are not statistically significant. The Supplementary Reference and FAQ document states, "Any population segment must be comprised of at least 60 individual units; if any asset owner opts for PBM but does not own 60 units to comprise a population then that asset owner may combine data from other asset owners until the needed 60 units is aggregated."		
EPRI	No	My comments are not to the point of dividing the requirements but the guidance in the PSMP tables are not technically valid for maintaining stationary battery cells. Internal ohmic measurements are related to the condition of an individual cell and not a battery bank. Also, there is not a direct correlation to ohmic measurements and battery or cell capacity. Ohmic measurements can provide an indication of a problem cell and point to a cell that should be tested. There also seems to be a misconception as to the type of capacity test that should be required. There are typically two types of tests done on batteries: service tests and performance tests. Service test are done to determine if a battery (group of cells) can meet its duty cycle whereas, a performance test is intended to test a battery against the manufacturers curve to make a determination of when the battery should be replaced. A battery could technically still meet its duty cycle but have reduced capacity. This simply means that the sizing was done properly, maintenance is timely, and there should be a timely replacement of the cells.
Response: Thank you for your comment. The drafting team agrees with statements by you and others concerning the true capacity of the station battery and relating it to internal ohmic measurements. Tables 1-4a, 1-4b and 1-4c have been modified for clarity, and		

Organization	Yes or No	Question 1 Comment
the Supplemental Reference and FAQ document has been modified to further elaborate on these concerns.		
Public Utility District No. 1 of Okanogan County	Affirmative	OCPD would like some clarification with regards to the Power Wave concept. Currently in Table 1.1 and Table 3 it states, “Voltage and/or current waveform sampling three or more times per power cycle, and conversion of samples to numeric values for measurement calculations by microprocessor electronics." OCPD feels that it might be better stated as simply 60 Hz.
Response: Thank you for your comment. The values for waveform sampling are intended to be verified by referencing a specific manufacturer’s specifications.		
ACES Power Marketing Standards Collaborators	Yes	Is the use of parentheticals within another set of parentheticals in Part 1.1 intentional? It is unusual to do this and a little confusing.
Response: Thank you for your comment. The SDT agrees with your suggestion, and made the following change: “Identify which maintenance method (time-based, performance-based per PRC-005 Attachment A, or a combination) is used to address each Protection System component type.”		
Ingleside Cogeneration LP	Yes	Ingleside Cogeneration agrees that a Compliance Authority should be alerted to those component types which have been assigned extended maintenance intervals because they use some form of monitoring. We also agree that it is appropriate that the PSMP list the relevant monitoring attributes in these cases, so they can be confirmed to be consistent with the criteria in PRC-005-2’s interval tables.
Response: Thank you for your comments.		
Northeast Power Coordinating Council	Yes	
MRO NSRF	Yes	
Tacoma Public Utilities	Yes	
Imperial Irrigation District (IID)	Yes	
Dominion	Yes	
Texas Reliability Entity	Yes	
Southwest Power Pool Standards	Yes	

Organization	Yes or No	Question 1 Comment
Development Team		
Tennessee Valley Authority	Yes	
FirstEnergy	Yes	
Western Area Power Administration	Yes	
Pepco Holdings Inc. & Affiliates	Yes	
Bonneville Power Administration	Yes	
PacifiCorp	Yes	See comments under #4.
PPL Supply NERC Registered Organizations	Yes	
MRO NSRF	Yes	
Arizona Public Service Company	Yes	
Southern Company Generation	Yes	
Kansas City Power & Light	Yes	
Edison Mission Marketing & Trading	Yes	
Alber Corporation	Yes	
Independent Electricity System Operator	Yes	
Liberty Electric Power LLC	Yes	
TransAlta Centralia Generation LLC	Yes	
Entergy Services	Yes	
ATCO Electric Ltd	Yes	
Westar Energy	Yes	
Ameren	Yes	
Central Lincoln	Yes	
BAE Batteries USA	Yes	
City of Austin dba Austin Energy	Yes	

Organization	Yes or No	Question 1 Comment
BAE Batteries USA	Yes	
Essential Power, LLC	Yes	
American Transmission Company, LLC	Yes	
CenterPoint Energy	Yes	
Xcel Energy	Yes	
Duke Energy	Yes	
PNM Resources	Yes	
Los Angeles Department of Water and Power	Yes	
Response: Thank you for your support.		

2. As a result of the changes to Requirement R1, the previous Requirement R3 was separated into three requirements:

a. Requirement R3 now requires that an entity utilizing a time-based program maintain its Protection System components in accordance with the maximum maintenance intervals listed in the tables. This change removes the compliance jeopardy associated with an entity having more stringent intervals (in its PSMP) than those listed in the tables.

b. Requirement R4 (new) requires an entity utilizing a performance-based program maintain its Protection System components in accordance with its performance-based Protection System Maintenance Program.

c. Requirement R5 (new) requires an entity to demonstrate efforts to correct identified unresolved maintenance issues. The previous language in Requirement R3 directed that an entity initiate resolution.

Do you agree with this change? If you do not agree, please provide specific suggestions for improvement.

Summary Consideration: Many commenters were in agreement with this change.

Numerous comments were offered relative to subject and definition of "Unresolved Maintenance Issues," per Requirement R5. As a result of these comments, the definition of this term was modified to include the phrase, "… cannot be corrected during the maintenance interval…" For those commenters objecting to the concept of Unresolved Maintenance Issues, the SDT explained the rationale behind the concept.

Several comments were submitted that were unrelated to this question.

Organization	Yes or No	Question 2 Comment
Beaches Energy Services	Negative	The applicability of the standard should be modified to reflect the FERC approved interpretation PRC-005-1b Appendix 1 that basically says that applicable Protection Systems are those that protect a BES Element AND trip a BES Element. The interpretation states: The applicability as currently stated will sweep in distribution protection: "4.2.1 Protection Systems that are installed for the purpose of detecting Faults on BES Elements (lines, buses, transformers, etc.)" Many (most) network distribution systems that have more than one source into a distribution network will have reverse power relays to detect faults on the BES

Organization	Yes or No	Question 2 Comment
		and trip the step-down transformer to prevent feedback from the distribution to the fault on the BES. This is not a BES reliability issue, but more of a safety issue and distribution voltage issue. These relays would be subject to the standard as the applicability is currently written, but, should not be and they are currently not within the scope of PRC-005-1b Appendix 1 because the step-down transformer (non-BES) is tripped and not a BES Element (hence, the "and" condition of the interpretation is not met). There are many other related examples of distribution that might be networked or have distributed generation on a distribution circuit where such reverse power relays, or overcurrent relays with low pick-ups, are used for safety and distribution voltage control reasons and are not there for BES Reliability. To make matters worse, for these Reverse Power relays, it is pretty much impossible to meet PRC-023 because the intent of the relay is to make current flow unidirectional (e.g., only towards the distribution system) without regard for the rating of the elements feeding the distribution network. So, if these relays are swept in, and if they are on elements > 200 kV, then the entity would not be able to meet PRC-023 as that standard is currently written. So, the SDT should adopt the FERC approved interpretation.

Response: Thank you for your comment. The SDT believes that the Applicability, as stated in PRC-005-2, is correct and supports the reliability of the BES. The SDT observes that the approved Interpretation addresses the term, “transmission Protection System,” and notes that this term is not used within PRC-005-2; thus the interpretation does not apply to PRC-005-2. PRC-005-2 specifically addresses Protection Systems that are installed for the purpose of detecting Faults on BES Elements.

To address your concern, the distribution protective devices and functions cited in this comment are not “installed for the purpose of detecting Faults on BES Elements” and would, therefore, not be subject to PRC-005-2. A relay used primarily for “safety and distribution voltage control reasons” is clearly not “installed for the purpose of detecting Faults on BES Elements.” The reverse power relay application described is also not “installed for the purpose of detecting Faults on BES Elements,” (the relays react to changes in power flow direction, which may or may not be due to a Fault) but for the purpose of preventing feedback from the distribution system to the transmission system.

Please see the PRC-005-2 Supplementary Reference and FAQ, Section 2.3, for a more detailed discussion of this issue.

Organization	Yes or No	Question 2 Comment
Fort Pierce Utilities Authority	Negative	1. The applicability of the standard should be modified to reflect the FERC approved interpretation PRC-005-1b Appendix 1 that basically says that applicable Protection Systems are those that protect a BES Element AND trip a BES Element. The applicability as currently stated will sweep in distribution protection: “4.2.1 Protection Systems that are installed for the purpose of detecting Faults on BES Elements (lines, buses, transformers, etc.).” Most network distribution systems that have more than one source into a distribution network will have reverse power relays to detect faults on the BES and trip the step-down transformer to prevent feedback from the distribution to the fault on the BES. This is not a BES reliability issue, but more of a safety and distribution voltage issue. These relays would be subject to the standard as the applicability is currently written, but, should not be and they are currently not within the scope of PRC-005-1b Appendix 1 because the step-down transformer (non-BES) is tripped and not a BES Element (hence, the "and" condition of the interpretation is not met). 2. There are many other related examples of distribution that might be networked or have distributed generation on a distribution circuit where such reverse power relays, or overcurrent relays with low pick-ups, are used for safety and distribution voltage control reasons and are not there for BES Reliability. To make matters worse, for these Reverse Power relays, it is pretty much impossible to meet PRC-023 because the intent of the relay is to make current flow unidirectional (e.g., only towards the distribution system) without regard for the rating of the elements feeding the distribution network. So, if these relays are swept in, and if they are on elements > 200

Organization	Yes or No	Question 2 Comment
		kV, then the entity would not be able to meet PRC-023 as that standard is currently written. FPUA recommends the SDT should adopt the FERC approved interpretation. 3. Another concern is regarding the sudden pressure relays. These had been out of the scope in all previous draft versions of PRC-005-2 because these do not measure electrical quantities. However, the SDT just added a requirement to test the trip path from the sudden pressure device, arguing that it is captured by the definition of Protection Systems. This inconsistency does not make sense and could create "grey areas" for other devices that can trip for low oil level or high temperature, among others. By their nature, sudden pressure devices are far less reliable than their associated control circuitry. I know of at least one large entity that disables sudden pressure relays on smaller transformers to cut down on nuisance alarms. If it is expected that non-electrically initiated devices may become part of some maintenance standard in the future, I think it would be premature for the SDT to address sudden pressure relays in PRC-005-2. 4. And lastly, page 77 of the Supplementary Reference has some text clarifying the requirement for establishing a baseline test: "For all new installations of Valve-Regulated Lead-Acid (VRLA) batteries and Vented Lead-Acid (VLA) batteries, where trending of the cells internal ohmic measurements to a baseline are to be used to determine the ability of the station battery to perform as designed, the establishment of the baseline as described above should be followed at the time of installation to insure the most accurate trending of the cell/unit." This guidance does not recognize the fact that

Organization	Yes or No	Question 2 Comment
		some battery manufacturers recommend the baseline tests to be performed at some point in time after the install to allow the cell chemistry to stabilize after the initial freshening charge. The manual from a battery manufacturer (Enersys Powersafe) states that "The initial records are those readings taken after the battery has been in regular float service for 3 months (90 days). These should include the battery terminal float voltage and specific gravity reading of each cell corrected to 77F (25C), all cell voltages, the electrolyte level, temperature of one cell on each row of each rack, and cell-to-cell and terminal connection detail resistance readings. It is important that these readings be retained for future comparison". If an entity follows the manufacturer's recommendation, the above statements would lead an auditor to a finding of non-compliance because internal ohmic tests were not performed prior to placing a new battery string in service. A simple modification to the wording would eliminate the conflict.

Response: Thank you for your comments.

1. The SDT believes that the Applicability, as stated in PRC-005-2, is correct and supports the reliability of the BES. The SDT observes that the approved Interpretation addresses the term, "transmission Protection System," and notes that this term is not used within PRC-005-2; thus, the interpretation does not apply to PRC-005-2. PRC-005-2 specifically addresses Protection Systems that are installed for the purpose of detecting Faults on BES Elements.
2. To address your concern, the distribution protective devices and functions cited in this comment are not "installed for the purpose of detecting Faults on BES Elements" and would, therefore, not be subject to PRC-005-2. A relay used primarily for "safety and distribution voltage control reasons" is clearly not "installed for the purpose of detecting Faults on BES Elements." The reverse power relay application described is also not "installed for the purpose of detecting Faults on BES Elements," (the relays react to changes in power flow direction, which may or may not be due to a Fault) but for the purpose of preventing feedback from the distribution system to the transmission system.

Organization	Yes or No	Question 2 Comment
Please see the PRC-005-2 Supplementary Reference and FAQ, Section 2.3, for a more detailed discussion of this issue. 3. DC trip circuit from a sudden pressure relay output to the trip coil of the interrupting device has always been included in the "Control circuitry" portion of a Protection System, and is discussed in Section 15.3 of the PRC-005-2 Supplementary Reference and FAQ document. In regards to including sudden pressure relays themselves, FERC, in Order 758, recently directed NERC to submit an informational filing providing a schedule for addressing sudden pressure relays in PRC-005. The NERC System Protection and Control Subcommittee (SPCS) worked with NERC staff to develop the informational filing, which was filed with FERC on April 12, 2012. Activities associated with the schedule submitted in the filing will be included in a final SAR to further develop PRC-005. A draft SAR for a second phase of this project is posted for information only at this time. **4.** The drafting team revised the Supplemental Reference and FAQ document based on your recommendations.		
Imperial Irrigation District (IID)	No	IID disagree with item c. and does not believe item c increases the reliability of the BES. The maintenance issues will be resolved internally and should not be required as per compliance of the standard.
Response: Thank you for your comment. The practice of returning Protection System devices to good working order exists currently as a required element of a sound maintenance program as required by the existing Protection System maintenance and testing standard, PRC-005-1b. For reference, NERC Compliance Application Notice CAN-0043 (Posted Final 12/30/2011) directs Compliance Enforcement Authorities (CEAs) to "…look for relay test results or field records with annotations such as "as-found" readings or pass/fail results; if failed, then adjustments made. The maintenance record for adjustments may be requested".		
Texas Reliability Entity	No	New requirement R5 states that an entity shall "demonstrate efforts" to correct identified Unresolved Maintenance Issues. This falls short of requiring completion of any corrective actions for the unresolved maintenance issue. We suggest rewording to "Each Transmission Owner, Generator Owner, and Distribution Provider shall develop a corrective action plan and work timetable to address identified Unresolved Maintenance Issues. The Registered Entity shall complete resolution of Unresolved Maintenance Issues within the time frame identified in the Entity corrective action plan." If R5 is modified, then M5 and the VSL should also be modified accordingly.
Response: Thank you for your comment.		

Organization	Yes or No	Question 2 Comment
Management of completion of the identified unresolved maintenance issue is a complex topic that falls outside of the scope of this standard. There can be any number of supply, process and management problems that make setting repair deadlines impossible. The SDT specifically chose the phrase, "demonstrate efforts to correct" (with guidance from NERC Staff) because of the concern that many more complex unresolved maintenance issues might require greater than the remaining maintenance interval to resolve (and yet still be a "closed-end process"). For example, a problem might be identified on a VRLA battery during a six-month check. In instances such as one that requires battery replacement as part of the long term resolution, it is highly unlikely that the battery could be replaced in time to meet the six-calendar-month requirement for this maintenance activity. The SDT believes corrective actions should be timely, but concludes it would be impossible to postulate all possible remediation projects; and, therefore, impossible to specify bounding time frames for resolution of all possible unresolved maintenance issues, or what documentation might be sufficient to provide proof that effective corrective action is being undertaken. The definition of "unresolved maintenance issue" has been modified to add a clarifying phrase that the deficiency "cannot be corrected during the maintenance interval."		
Nebraska Public Power District	No	The FAQ attempts to clarify the intent of "demonstrate efforts to correct", however, there is no explanation as to why this new term is preferable to the more concise "initiate resolution" term that was developed and agreed upon over the last year. In the Supplementary Reference and FAQ document there is a request for clarification and it is reprinted below. Please clarify what is meant by "...demonstrate efforts to correct an unresolved maintenance issue..."; why not measure the completion of the corrective action? Management of completion of the identified unresolved maintenance issue is a complex topic that falls outside of the scope of this standard. There can be any number of supply, process and management problems that make setting repair deadlines impossible. The SDT specifically chose the phrase "demonstrate efforts to correct" (with guidance from NERC Staff) because of the concern that many more complex unresolved maintenance issues might require greater than the remaining maintenance interval to resolve (and yet still be a "closed-end process"). For example, a problem might be identified on a VRLA battery during a 6 month check. In instances such as one that requiring battery replacement as part of the long term resolution, it is highly unlikely that the battery could be replaced in time to meet the 6 calendar month requirement for this maintenance activity. The SDT does not believe entities should be found in violation of a maintenance program

Organization	Yes or No	Question 2 Comment
		requirement because of the inability to complete a remediation program within the original maintenance interval. The SDT does believe corrective actions should be timely but concludes it would be impossible to postulate all possible remediation projects and therefore, impossible to specify bounding time frames for resolution of all possible unresolved maintenance issues or what documentation might be sufficient to provide proof that effective corrective action is being undertaken. I agree with this response and specifically the last sentence. This indicates that R5 "demonstrating efforts to correct unresolved issues" is too open ended and subjective and cannot be applied by enforcement in a consistent way. R5 should be removed from the standard.
Response: Thank you for your comment. Management of completion of the identified unresolved maintenance issue is a complex topic that falls outside of the scope of this standard. There can be any number of supply, process and management problems that make setting repair deadlines impossible. The SDT specifically chose the phrase, "demonstrate efforts to correct" (with guidance from NERC Staff) because of the concern that many more complex unresolved maintenance issues might require greater than the remaining maintenance interval to resolve (and yet still be a "closed-end process"). For example, a problem might be identified on a VRLA battery during a six-month check. In instances such as one that requires battery replacement as part of the long term resolution, it is highly unlikely that the battery could be replaced in time to meet the six-calendar-month requirement for this maintenance activity. The SDT believes corrective actions should be timely, but concludes it would be impossible to postulate all possible remediation projects; and, therefore, impossible to specify bounding time frames for resolution of all possible unresolved maintenance issues, or what documentation might be sufficient to provide proof that effective corrective action is being undertaken. The definition of "unresolved maintenance issue" has been modified to add a clarifying phrase that the deficiency "cannot be corrected during the maintenance interval."		
Bonneville Power Administration	No	BPA believes that R5 is not worded in such a way that it can be easily or consistently audited.
Response: Thank you for your comment. Management of completion of the identified unresolved maintenance issue is a complex topic that falls outside of the scope of this standard. There can be any number of supply, process and management problems that make setting repair deadlines impossible. The SDT specifically chose the phrase "demonstrate efforts to correct" (with guidance from NERC Staff) because of the concern that many more complex unresolved maintenance issues might require greater than the remaining maintenance interval to resolve (and		

Organization	Yes or No	Question 2 Comment
yet still be a "closed-end process"). For example, a problem might be identified on a VRLA battery during a six-month check. In instances such as one that requires battery replacement as part of the long term resolution, it is highly unlikely that the battery could be replaced in time to meet the six-calendar-month requirement for this maintenance activity. The SDT believes corrective actions should be timely but concludes it would be impossible to postulate all possible remediation projects; and, therefore, impossible to specify bounding time frames for resolution of all possible unresolved maintenance issues, or what documentation might be sufficient to provide proof that effective corrective action is being undertaken. The definition of "Unresolved Maintenance Issue" has been modified to add a clarifying phrase that the deficiency "cannot be corrected during the maintenance interval." Each entity must determine how to document the efforts to correct the Unresolved Maintenance Issue based on the specific issue and choice of remediation.		
PPL Supply NERC Registered Organizations	No	1. The maximum maintenance intervals in PRC-005-2 of 4 calendar months and 18 calendar months are not compatible with computerized maintenance-planning programs based on periodicity rather than elapsed time from the previous check. This situation could be addressed in a conservative fashion by performing work quarterly instead of at 4-month intervals, and annually in place of 18-month periods, which also provides often-needed flexibility as to scheduling the tasks. Inspections performed in April for Q2 and September for Q3 would not meet NERC's 4 calendar month criterion, however, and a similar problem exists for annual checks. The more-stringent compliance jeopardy cited above has therefore not been fully addressed. We recommend changing the 4 calendar months and 18 calendar months intervals to quarterly and annually respectively. 2. We consider addition of the expression, "causes the component to not meet the intended performance," to the previous draft's definition of Unresolved Maintenance Issues (UMIs) to constitute a step backwards, because of the unavoidable subjectivity involved in deciding whether or not a battery or other protection system device is unable to perform as intended. A battery with some "sparkle" on the plates due to sulfation would still be able to

Organization	Yes or No	Question 2 Comment
		perform adequately, for example, making this an issue to watch but not an UMI. It is impractical to provide strict, quantitative, UMI-threshold performance limits for every piece of equipment in a Protection System and every situation that may arise, however. The concept of an UMI has some appeal from a common-sense point of view; but as a regulation it is impractical and, given the breadth of the topic at hand, is likely to remain so regardless of alternative phrasing that might be attempted.
Response: Thank you for your comment. 1. The SDT believes that management issues associated with computerized maintenance management programs can be adapted to provide maintenance triggers consistent with the intervals established in the tables. Many of these systems offer the ability for the user to create custom algorithms to trigger the desired work order, reminder, or alarm, etc. The SDT also believes the four calendar-month and 18-calendar-month intervals are appropriate for the relative Protection System components. An entity may utilize the abbreviated intervals, such as you suggest, as long as they meet the explicit requirements and intervals established in the standard. 2. The consideration of "meet the intended performance" is an issue for an entity to determine subjectively. This consideration depends heavily upon the nature of observed anomaly and upon the actual intended performance.		
Arizona Public Service Company	No	The standard does not provide basis for the enumerated "maximum allowable interval that is appropriate to the type of the protection system and its impact on the reliability of the Bulk-Power System." An example of such an approach is the Standard Technical Specifications in use by the nuclear power industry; e.g., NUREG 1432, volume 2. While we are supportive of the changes the SDT has made, APS is concerned the draft Standard will not give entities the flexibility to continue to improve reliability based on changing industry norms and best practices. When technology changes for the better, industry will need the flexibility to optimize use of the new technology while still maintaining an appropriate level of reliability. Lack of defined bases for intervals will prevent technically sound revision to maintenance practices.

Organization	Yes or No	Question 2 Comment
Response: Thank you for your comment. The SDT established the maximum maintenance intervals for each Protection System component subject to the standard based upon research performed by the NERC System Protection and Control Subcommittee and "best practice" input from industry. The base intervals are extended in consideration of modern monitoring capabilities and new technologies. These extended intervals range from "12 calendar years" to "No periodic maintenance specified." Consistent with the FERC directive of intervals being "…appropriate to the type of protection system and its impact on the reliability of the Bulk Power System," the SDT did not provide a "No periodic maintenance specified" extended interval for high reliability impact devices, such as protective relays; but rather stipulates a six-calendar-year interval for unmonitored electromechanical and unmonitored microprocessor relays, and a 12-calendar-year verification of monitored microprocessor relays. Please see Section 8.3 of the Supplementary Reference and FAQ document for a more detailed discussion of this issue.		
Southern Company Generation	No	1. The change made to R3 was a good move. Entities should be allowed the flexibility to build grace periods into their maintenance programs to assist them in meeting common national standards for maintenance activities and intervals. 2. If possible, elimination of all possible uncertainty in the auditability of requirement R5 is desired. We prefer eliminating this requirement R5 altogether to the proposed draft that includes a requirement to demonstrate efforts to correct identified unresolved maintenance issues.
Response: 1. Thank you for your comment and support. 2. Returning Protection System devices to good working order exists currently as a required element of a sound maintenance program subject to the existing Protection System Maintenance and Testing Standard, PRC-005-1b. For reference, NERC Compliance Application Notice CAN-0043 (Posted Final 12/30/2011) directs Compliance Enforcement Authorities (CEAs) to "…look for relay test results or field records with annotations such as "as-found" readings or pass/fail results; if failed, then adjustments made. The maintenance record for adjustments may be requested". Management of completion of the identified unresolved maintenance issue is a complex topic that falls outside of the scope of		

Organization	Yes or No	Question 2 Comment
this standard. There can be any number of supply, process and management problems that make setting repair deadlines impossible. The SDT specifically chose the phrase "demonstrate efforts to correct" (with guidance from NERC Staff) because of the concern that many more complex unresolved maintenance issues might require greater than the remaining maintenance interval to resolve (and yet still be a "closed-end process"). For example, a problem might be identified on a VRLA battery during a six-month check. In instances such as one that requires battery replacement as part of the long-term resolution, it is highly unlikely that the battery could be replaced in time to meet the six-calendar-month requirement for this maintenance activity. The SDT believes corrective actions should be timely, but concludes it would be impossible to postulate all possible remediation projects; and, therefore, impossible to specify bounding time frames for resolution of all possible unresolved maintenance issues or what documentation might be sufficient to provide proof that effective corrective action is being undertaken. The definition of "unresolved maintenance issue" has been modified to add a clarifying phrase that the deficiency "cannot be corrected during the maintenance interval."		
Ingleside Cogeneration LP	No	1. Ingleside Cogeneration LP strongly agrees with the change made to the language in R1 and R3 specifying that compliance is measured against the PRC-005-2's interval tables wherever time-based methods are used. The intervals were carefully designed to assure an acceptable level of BES reliability, and the regulatory authorities must be prepared to stand by them. Furthermore, a Registered Entity who may establish tighter intervals for their own internal purposes should be encouraged to do so - and without a threat of a violation hanging over their heads. 2. We also agree with the need to add a new requirement (R4) which applies to those entities that choose to use a performance-based system to determine some of their maintenance intervals. It logically maps back to requirement R2 which states that the calculated intervals must be documented in the PSMP. 3. We cannot agree with the language used in R5, which, in its previous form under R3, had specified only that the Protection System owner "initiate

Organization	Yes or No	Question 2 Comment
		resolution" to correct identified unresolved maintenance issues. We were actually comfortable with this language as it was unambiguous that progress did not need to be tracked start-to-finish. We would like to propose adding a phrase that tracks the statement in M5; which we find acceptable. This would result in the following: R5. Each Transmission Owner, Generator Owner, and Distribution Provider shall demonstrate THAT IT HAS UNDERTAKEN <our emphasis> efforts to correct identified Unresolved Maintenance Issues.
Response: 1. Thank you for your comment and support. 2. Thank you for your comment and support. 3. The SDT believes corrective actions should be timely, but concludes it would be impossible to postulate all possible remediation projects; and, therefore, impossible to specify bounding time frames for resolution of all possible unresolved maintenance issues or what documentation might be sufficient to provide proof that effective corrective action is being undertaken. For the Compliance Monitoring Authority to be confident that the corrective action is being implemented, the entity should expect to demonstrate progress toward correcting the Unresolved Maintenance Issue, such as the evidence suggested in Measure M5 (with additional suggested evidence added).		
American Electric Power	No	1. R3: Table 1-5 notes a "mitigating device" as part of component attributes. Such a phrase could be open to interpretation and needs to be clearly defined. 2. Table 1-3, Maintenance Activities - there is nothing specifically regarding accuracy. Suggest incorporating the definition of "verify" as used in the FAQ or perhaps something similar to "verify values are as expected". 3. R5: We understand the drafting team's desire to deal with unresolved maintenance issues, however it is not clear how the adequacy of resolving

Organization	Yes or No	Question 2 Comment
		those issues would be determined by an auditor. If these kinds of efforts are going to be scrutinized, there needs to be some sort of boundaries established so that it is clear how unresolved maintenance issues would be evaluated.
Response: Thank you for your comment. 1. The SDT intended that "mitigating devices" address actions of SPSs, which may include activities beyond tripping of interrupting devices. For example, SPSs may perform actions like generation run-back or generation fast-valving. 2. 'Verify" is a term expressed in the PSMP definition, and the use of the term in Table 1-3 indicates that the accuracy needs to be 'whatever is necessary' for proper functioning of the connected relays. 3. There can be any number of supply, process and management problems that make setting repair deadlines impossible. The SDT believes corrective actions should be timely, but concludes it would be impossible to postulate all possible remediation projects; and, therefore, impossible to specify bounding time frames for resolution of all possible unresolved maintenance issues. Measure M5 suggests some examples of evidence.		
US Bureau of Reclamation	No	The Requirement R5 indicates the entity has to "demonstrate" efforts to correct identified unresolved maintenance issues. The measure M5 described documentation of the efforts. The requirement language should be explicit. Does the standard want a demonstration which implies active role of the entity to prove what it is doing, or to provide documentation of the activities underway to correct deficiencies? The language in the requirement should be altered to "Each Transmission Owner, Generator Owner, and Distribution Provider shall prepare a CAP for each identified Unresolved Maintenance Issue." A second requirement is needed to require that "Each Transmission Owner, Generator Owner, and Distribution Provider shall complete its CAP to correct the identified Unresolved Maintenance Issues." The measures would need to be adjusted accordingly to reflect the CAP and evidence that the entity completed the CAP.
Response: Thank you for your comment. The term within Requirement R5, "… demonstrate efforts …" is intended for both – that the entities are acting to correct the deficiency and also (to prove compliance) maintaining documentation of the activities underway to		

Organization	Yes or No	Question 2 Comment
correct the deficiency. The SDT elected to not require a "**Corrective Action Plan**" as defined in the NERC Glossary of Terms to avoid much of the systemic, ongoing documentation attendant to that term. However, if an entity wishes to use a Corrective Action Plan as defined, that would be an acceptable method of meeting Requirement R5.		
Essential Power, LLC	No	The change to R3 is too restrictive, and removes the registered entity's ability to better define its own intervals based on its own experience and system characteristics. The comments regarding a CEA's enforcement of an RE's more stringent internal intervals is not indicative of an issue with the Requirement, but with the way in which it is enforced.
Response: Thank you for your comment. Requirement R3 still allows entities flexibility within their own Protection System Maintenance and Testing Program (PSMP), and only restricts an entity's establishment of intervals that are greater than those specified in the tables. For example, an entity may choose to establish, in its own PSMP, testing of a specific type or model of electromechanical relay more frequently than the six-calendar-year interval specified in Table 1-1 of PRC-005-2. However, should some issue come up that affects the entity's ability to complete testing of those devices within their programs established interval, but they are able complete the testing within the maximum maintenance interval provided by the standard, the standard explicitly establishes that they will not be found non-compliant for missing their own, more stringent interval.		
Xcel Energy	No	We agree with the changes to R3 and the new R4 requirement but disagree with the wording change in the new R5 requirement. The difference between "initiate resolution" and "demonstrate efforts to correct identified unresolved maintenance issues" is very unclear. Please clarify the SDT's intent with this subtle wording change. In our opinion, it would be fairly obvious if an entity met a requirement to "initiate resolution" and, thus, this would be easily measurable requirement. It seems that the phrase "demonstrate efforts to correct identified unresolved maintenance issues" will be open to more auditor judgment as to what constitutes adequate efforts to correct a deficiency and thus makes the measurement of meeting this requirement far more arbitrary. If this is not the intent, then why bother with the wording change? Furthermore, CEAs should realize that entities already have strong financial incentives in correcting identified unresolved maintenance issues to minimize the risk of costly equipment damage or equally costly outages of critical equipment. Delays in correcting identified

Organization	Yes or No	Question 2 Comment
		unresolved maintenance issues are seldom driven by cost avoidance and are more likely driven by the time it takes to develop, engineer and/or procure a better solution to a problem. Prompt band-aid type fixes are not necessarily desirable fixes and the wording of R5 should not promote the band-aid approach to the correction of a problem.
Response: Thank you for your comment and your support on Requirements R3 and R4. Requirement R5 is expressly focused on allowing entities to resolve deficiencies in an effective manner, rather than performing "band-aid" fixes. Management of completion of the identified unresolved maintenance issue is a complex topic that falls outside the scope of this standard. There can be any number of supply, process and management problems that make setting repair deadlines impossible. The SDT specifically chose the phrase "demonstrate efforts to correct" (with guidance from NERC Staff) because of the recognition that more complex unresolved maintenance issues could require more time to resolve effectively than there is time remaining in the maintenance interval, yet the problems must eventually be resolved. The SDT believes that corrective actions should be timely, but concludes it would be impossible to postulate all possible remediation projects; and, therefore, impossible to specify bounding time frames for resolution of all possible unresolved maintenance issues, or what documentation might be sufficient to provide proof that effective corrective action is being undertaken. The definition of "unresolved maintenance issue" has been modified to add a clarifying phrase that the deficiency "cannot be corrected during the maintenance interval."		
ExxonMobil Research and Engineering	No	As written, the current draft of PRC-005-2 discriminates against smaller entities that do not have a population size of 60 for each component type. Historical records provide an accurate account of how specific components have performed in their installed environment. For a set population size, increasing the number of historical data points should improve the accuracy of an entity's calculated mean time between failures, so, if you increase the period over which the historical data must be evaluated, you can compensate for a smaller segment population size. The SDT's current draft prevents smaller entities from using a larger historical data set to make up for a smaller population size when developing a performance based protective system maintenance and testing program. The SDT should reconsider allowing smaller entities to use historical records that extend for period longer than a single year in the development of a performance based program.

Organization	Yes or No	Question 2 Comment
Response: Thank you for your comment. Small entities are permitted to aggregate their components with similar components of other entities to meet the component populations, as long as the programs are (and remain) similar – See Section 9 of the Supplementary Reference and FAQ document and the associated footnote to Attachment A. Decreasing the component population below the requirements of Attachment A will result in an unsound program due to component populations that are not statistically significant. The Supplementary Reference and FAQ document states, "Any population segment must be comprised of at least 60 individual units; if any asset owner opts for PBM but does not own 60 units to comprise a population then that asset owner may combine data from other asset owners until the needed 60 units is aggregated." Historical data may be good for trending, but may not be suitable for judging current maintenance program effectiveness.		
EPRI	No	See comments in question 1
Constellation/Exelon	No	While we are fine with the structural change to separate the requirements out further, we have concerns with the content of the requirements. R5/M5 • M5 needs further clarity to reflect the intended compliance obligation for R5. In previous comments, Constellation expressed concern that compliance obligation for R5 implied a greater level of completion in attending to an identified "deficiency." We pointed out that the severity of the "deficiency" found will dictate the method and timing of a "follow up correction action". In response to the comment, the SDT stated that "PRC-005-2 only requires the entity "... initiate resolution" of the issue found." The SDT revision of R5 and M5 is an improvement; however, changes to M5 are needs to clarify that efforts to correct do not require demonstration that those efforts have concluded. • A revision to the language will clarify the SDT intent. Please consider use of the following language: R5. Each Transmission Owner, Generator Owner, and Distribution Provider shall correct or initiate resolution of identified Unresolved Maintenance Issues. [Violation Risk Factor: Medium] [Time Horizon: Operations Planning] M5. Each Transmission

Organization	Yes or No	Question 2 Comment
		Owner, Generator Owner, and Distribution Provider shall have evidence that it has initiated resolution of, or corrected, identified Unresolved Maintenance Issues in accordance with Requirement R5. The evidence for initiated resolution may include but is not limited to work orders for future resolution, project schedules for future resolution, or other documentation of future plans. The evidence for corrected Unresolved Maintenance Issues may include but is not limited to replacement Component orders, invoices, return material authorizations (RMAs) or purchase orders.
Response: Thank you for your comment. The SDT specifically chose the phrase "demonstrate efforts to correct" (with guidance from NERC Staff) because of the recognition that more complex unresolved maintenance issues could require more time to resolve effectively than there is time remaining in the maintenance interval, yet the problems must eventually be resolved. Measure M5 has been modified to include "project schedules with completed milestones."		
Northeast Power Coordinating Council	Yes	
DTE Energy	Yes	
MRO NSRF	Yes	
Tacoma Public Utilities	Yes	
Dominion	Yes	1. Dominion understands R3 to mean that the time-based maintenance interval can be less that but not exceed the maximum maintenance intervals in the tables. But that compliance will be based upon the maximum interval. Please confirm that our understanding is correct. 2. Dominion believes the intent of the footnote in Table 1-1 is to 'start the interval' on either the 1st day of a calendar year or calendar month. We also believe this will require any entity whose current intervals are based on annual or monthly will have to adjust their intervals to calendar as they

Organization	Yes or No	Question 2 Comment
		transition to PRC-005-2. Please confirm our understanding is correct. 3. We also believe this transition could result in the compliance interval measurement being shorter or longer than it would have been if PRC-005-2 had not been approved. If this is incorrect, please provide examples to provide clarity.
Response: Thank you for your comment. 1. Yes, your understanding of Requirement R3 is correct. 2. No, your understanding of Footnote 1 at the bottom of the page where Table 1-1 appears in the standard is not correct. The intent of Footnote 1 is to clarify, or define the terms "calendar year" and "calendar month" as they relate to the period in which the next maintenance activity for a particular interval must occur. For example, if an entity performed electromechanical relay testing at Substation A in April of 2010, in accordance with the maximum maintenance interval of six-calendar-years established in Table 1-1, the entity must perform the next round of electromechanical relay testing at Substation A sometime during the calendar-year period beginning January 1, 2016. Please see Section 7.1 of the Supplementary Reference and FAQ document for a more detailed discussion of this issue. 3. If an entity's maintenance program specifies a maintenance activity occur "30 days" from the previous activity's performance, it would be possible that a transition to a "calendar month" interval would allow the first performance of the activity after the transition to occur sooner or later than the 30 days previously specified. However, many existing maintenance programs that establish performance of an activity "annually" or "monthly" should not require more than adjusting the language in the program. For instance, if an entity's current program is to inspect substations "monthly," they are likely performing those inspections sometime during each calendar month. This practice would be no different with the interval redefined as: "once each calendar month."		
PNGC Comment Group	Yes	The PNGC comment group agrees with this change. Removing the jeopardy associated with more stringent intervals will make it less risky for entities to tighten intervals in their PSMP.
Response: Thank you for your comment and support.		

Organization	Yes or No	Question 2 Comment
ACES Power Marketing Standards Collaborators	Yes	1. We agree the changes will benefit reliability by allowing a registered entity to have shorter maintenance cycles without the potential for compliance violations associated with missing their shorter maintenance cycle. 2. Requirement R5 should be modified to focus on what is to be accomplished. As it is written now, the requirement is essentially focused on compliance by using "shall demonstrate efforts". Compliance is about demonstrating or presenting evidence that the requirement has been met. The purpose of the requirement is to correct Unresolved Maintenance issues. We suggest changing the wording to: "shall initiate resolution of Unresolved Maintenance Issues."
Response: 1. Thank you for your comment and support of this change. **2.** Management of completion of the identified unresolved maintenance issue is a complex topic that falls outside the scope of this standard. There can be any number of supply, process and management problems that make setting repair deadlines impossible. The SDT specifically chose the phrase "demonstrate efforts to correct" (with guidance from NERC Staff) because of the recognition that more complex unresolved maintenance issues could require more time to resolve effectively than there is time remaining in the maintenance interval, yet the problems must eventually be resolved. The SDT believes that corrective actions should be timely, but concludes it would be impossible to postulate all possible remediation projects; and, therefore, impossible to specify bounding time frames for resolution of all possible unresolved maintenance issues, or what documentation might be sufficient to provide proof that effective corrective action is being undertaken. The definition of "unresolved maintenance issue" has been modified to add a clarifying phrase that the deficiency "cannot be corrected during the maintenance interval."		
Liberty Electric Power LLC	Yes	Thank you for the change in Requirement 3. This standard now gives clear direction to entities, removes the burden of "created paperwork" intended only for the use of auditors, and removes the compliance jeopardy for holding a program to a higher standard than required.

Organization	Yes or No	Question 2 Comment
Response: Thank you for your comment and support.		
TransAlta Centralia Generation LLC	Yes	More detail explanation or examples of Efforts on R5 is required
Response: Thank you for your comment. There can be any number of supply, process and management problems that make setting repair deadlines impossible. The SDT specifically chose the phrase "demonstrate efforts to correct" (with guidance from NERC Staff) because of the recognition that more complex unresolved maintenance issues could require more time to resolve effectively than there is time remaining in the maintenance interval, yet the problems must eventually be resolved. The SDT believes that corrective actions should be timely but concludes it would be impossible to postulate all possible remediation projects; and, therefore, impossible to specify bounding time frames for resolution of all possible unresolved maintenance issues, or what documentation might be sufficient to provide proof that effective corrective action is being undertaken. The definition of "unresolved maintenance issue" has been modified to add a clarifying phrase that the deficiency "cannot be corrected during the maintenance interval." See the Supplementary Reference and FAQ document Section 4.1 for additional discussion.		
Central Lincoln		1. We thank the SDT for removing the extra compliance jeopardy associated with stringent intervals. The extra jeopardy never made sense to us, since it could result in sanctions to one entity and no sanctions to another entity when both followed the same interval with no BES risk presented by either. 2. We are concerned regarding the language of R5. We understand that maintenance without resolution is worthless, but the language here is subjective allowing different auditors to reach differing conclusions whether a sufficiently documented effort has been made. We also note that entities are expected to be continually in compliance with applicable standards, and are expected to self report when they are not. Strictly interpreted, an entity is out of compliance with R5 if there is any time lag between the moment the problem is identified in the field and documentation is produced of an effort taken to resolve it. We suggest the inclusion of a reasonable time limit.

Organization	Yes or No	Question 2 Comment
Response: 1. Thank you for your comment and support. **2.** The definition of "Unresolved Maintenance Issue" has been modified to add a clarifying phrase that the deficiency "cannot be corrected during the maintenance interval," which allows the entity until the end of the maintenance interval to develop an approach for correcting the problem. See the Supplementary Reference and FAQ document Section 4.1 for additional discussion.		
Southwest Power Pool Standards Development Team	Yes	
Tennessee Valley Authority	Yes	
FirstEnergy	Yes	
Western Area Power Administration	Yes	
Pepco Holdings Inc. & Affiliates	Yes	
PacifiCorp	Yes	See comments under #4.
MRO NSRF	Yes	
Kansas City Power & Light	Yes	
Edison Mission Marketing & Trading	Yes	
Alber Corporation	Yes	
Flathead Electric Cooperative, Inc.	Yes	
Independent Electricity System Operator	Yes	
Entergy Services	Yes	
ATCO Electric Ltd	Yes	
Manitoba Hydro	Yes	
Westar Energy	Yes	
Ameren	Yes	
BAE Batteries USA	Yes	
City of Austin dba Austin Energy	Yes	

Organization	Yes or No	Question 2 Comment
BAE Batteries USA	Yes	
American Transmission Company, LLC	Yes	
CenterPoint Energy	Yes	
Duke Energy	Yes	
PNM Resources	Yes	
Los Angeles Department of Water and Power	Yes	
Response: Thank you for your support.		

3. The Supplemental Reference and FAQ document was revised to reflect changes made to the draft standard and to address additional issues raised. Do you agree with the changes? If you do not agree, please provide specific suggestions for improvement.

Summary Consideration: Several comments were submitted that were unrelated to this question.

Many commenters offered questions and suggestions related to the content of the Supplementary Reference and FAQ document, which resulted in assorted changes throughout the document.

Organization	Yes or No	Question 3 Comment
Fort Pierce Utilities Authority	Negative	1. The applicability of the standard should be modified to reflect the FERC approved interpretation PRC-005-1b Appendix 1 that basically says that applicable Protection Systems are those that protect a BES Element AND trip a BES Element. The applicability as currently stated will sweep in distribution protection: “4.2.1 Protection Systems that are installed for the purpose of detecting Faults on BES Elements (lines, buses, transformers, etc.).” Most network distribution systems that have more than one source into a distribution network will have reverse power relays to detect faults on the BES and trip the step-down transformer to prevent feedback from the distribution to the fault on the BES. This is not a BES reliability issue, but more of a safety and distribution voltage issue. These relays would be subject to the standard as the applicability is currently written, but, should not be and they are currently not within the scope of PRC-005-1b Appendix 1 because the step-down transformer (non-BES) is tripped and not a BES Element (hence, the "and" condition of the interpretation is not met). There are many other related examples of distribution that might be networked or have distributed generation on a distribution circuit where such reverse power relays, or overcurrent relays with low pick-ups, are used for safety and distribution voltage control reasons and are not there for BES Reliability. To make matters

Organization	Yes or No	Question 3 Comment
		worse, for these Reverse Power relays, it is pretty much impossible to meet PRC-023 because the intent of the relay is to make current flow unidirectional (e.g., only towards the distribution system) without regard for the rating of the elements feeding the distribution network. So, if these relays are swept in, and if they are on elements > 200 kV, then the entity would not be able to meet PRC-023 as that standard is currently written. FPUA recommends the SDT should adopt the FERC approved interpretation. 2. Another concern is regarding the sudden pressure relays. These had been out of the scope in all previous draft versions of PRC-005-2 because these do not measure electrical quantities. However, the SDT just added a requirement to test the trip path from the sudden pressure device, arguing that it is captured by the definition of Protection Systems. This inconsistency does not make sense and could create “grey areas” for other devices that can trip for low oil level or high temperature, among others. By their nature, sudden pressure devices are far less reliable than their associated control circuitry. I know of at least one large entity that disables sudden pressure relays on smaller transformers to cut down on nuisance alarms. If it is expected that non-electrically initiated devices may become part of some maintenance standard in the future, I think it would be premature for the SDT to address sudden pressure relays in PRC-005-2. 3. And lastly, page 77 of the Supplementary Reference has some text clarifying the requirement for establishing a baseline test: “For all new installations of Valve-Regulated Lead-Acid (VRLA) batteries and Vented Lead-Acid (VLA) batteries, where trending of the cells internal ohmic measurements to a baseline are to be used to determine the ability of the station battery to perform as designed, the establishment of the baseline as described above

Organization	Yes or No	Question 3 Comment
		should be followed at the time of installation to insure the most accurate trending of the cell/unit." This guidance does not recognize the fact that some battery manufacturers recommend the baseline tests to be performed at some point in time after the install to allow the cell chemistry to stabilize after the initial freshening charge. The manual from a battery manufacturer (Enersys Powersafe) states that "The initial records are those readings taken after the battery has been in regular float service for 3 months (90 days). These should include the battery terminal float voltage and specific gravity reading of each cell corrected to 77F (25C), all cell voltages, the electrolyte level, temperature of one cell on each row of each rack, and cell-to-cell and terminal connection detail resistance readings. It is important that these readings be retained for future comparison". If an entity follows the manufacturer's recommendation, the above statements would lead an auditor to a finding of non-compliance because internal ohmic tests were not performed prior to placing a new battery string in service. A simple modification to the wording would eliminate the conflict.

Response: Thank you for your comments.

1. **The SDT believes that the Applicability, as stated in PRC-005-2, is correct and supports the reliability of the BES. The SDT observes that the approved Interpretation addresses the term, "transmission Protection System," and notes that this term is not used within PRC-005-2; thus, the interpretation does not apply to PRC-005-2. PRC-005-2 specifically addresses Protection Systems that are installed for the purpose of detecting Faults on BES Elements.**

   To address your concern, the distribution protective devices and functions provided as examples in this comment, as pointed out by the commenter, are not "installed for the purpose of detecting Faults on BES Elements," and would, therefore, not be subject to PRC-005-2. A relay used primarily for "safety and distribution voltage control reasons" is clearly not "installed for the purpose of detecting Faults on BES Elements." The reverse power relay application described is also not "installed for

Organization	Yes or No	Question 3 Comment
		the purpose of detecting Faults on BES Elements" (the relays react to changes in power flow direction, which may or may not be due to a Fault), but for the purpose of preventing feedback from the distribution system to the transmission system. Please see the PRC-005-2 Supplementary Reference and FAQ, Section 2.3, for a more detailed discussion of this issue. 2. **DC trip circuit from a sudden pressure relay output to the trip coil of the interrupting device has always been included in the "Control circuitry" portion of a Protection System, and is discussed in Section 15.3 of the PRC-005-2 Supplementary Reference and FAQ document. In regards to including sudden pressure relays themselves, FERC, in Order 758, recently directed NERC to submit an informational filing providing a schedule for addressing sudden pressure relays in PRC-005. The NERC System Protection and Control Subcommittee (SPCS) worked with NERC staff to develop the informational filing, which was filed with FERC on April 12, 2012. Activities associated with the schedule submitted in the filing will be included in a final SAR to further develop PRC-005. A draft SAR has been posted on the project page for information only.** 3. **The Drafting Team has revised the Supplemental Reference and FAQ document based on your recommendations.**
DTE Energy	No	
MRO NSRF	No	1. Section 5.1 (second paragraph, under the first bullet) states: "TBM can include review of recent power system events near the particular terminal. Operating records may verify that some portion of the Protection System has operated correctly since the last test occurred. If specific protection scheme components have demonstrated correct performance within specifications, the maintenance test time clock can be reset for those components." If this "actual event" can be used as proof that the Protection System operated correctly, then this should be added to M3 in the Measures section of PRC-005-2. 2. Section 2.4.1 - Sudden Pressure Relays - This question should be clarified that circuits from only EHV transformers should be considered in scope. As highlighted by the NERC GMD reports EHV transformers (345, 500 & 765 kV) are critical.

Organization	Yes or No	Question 3 Comment
		3. In addition, circuits that do not actually trip a breaker (panel lights, alarms, etc.) should not be included in the scope of components included in the maintenance and testing program.
Response: Thank you for your comments. 1. **Measure M3 lists possible types of evidence, and states, "is not limited to." Therefore, in-service operations can be provided as evidence.** 2. **This standard applies to the BES and certain transformers less than 345kV are, therefore, included.** 3. **Table 5 Component Type states, "Control Circuitry associated with protective functions…" and, therefore, the circuits you reference are not included.**		
FirstEnergy	No	Please see our comments and suggested changes to the Supplemental Reference and FAQ document in Question 4.
Western Area Power Administration	No	Western Area Power Administration does not agree that the trip path from a sudden pressure device is a part of the protection system control circuitry as stated in the revised Supplementary document. FAQ should be used as guidance and not for compliance.
Response: Thank you for your comment. The trip path from a sudden pressure device is a part of the Protection System control circuitry. The sensing element is omitted from PRC-005-2 testing requirements because the SDT is unaware of industry recognized testing protocol for the sensing elements. The SDT believes that Protection Systems that trip (or can trip) the BES should be included. This position is consistent with the currently-approved PRC-005-1B, consistent with the SAR for Project 2007-17, and understands this to be consistent with the position of FERC staff. The Supplementary Reference and FAQ document provides supporting discussion, but is not part of the Standard. The SDT intends that it be posted as a Reference Document, accompanying the standard. As established in SDT Guidelines, the standard is to be a terse statement of requirements, etc., and is not to include explanatory information like that included in the Supplementary Reference and FAQ document.		
Nebraska Public Power District	No	1. Section D 1.3 Evidence Retention - Do not agree with requirement to keep the two most recent performances of each distinct maintenance activity. Should

Organization	Yes or No	Question 3 Comment
		not require records previous to last audit. What is the point of keeping records up to twenty years? 2. FAQ page 7 and 77 now include discussion about how sudden pressure relays are "presently" excluded because they do not meet the definition of a protection system and a method of component verification does not exist. This part I agree with. The problem is that they go on to explain that the DC control circuitry from the Sudden Pressure relay is part of a protection system. This I disagree with. It's clear that the Standards Drafting Team is attempting a compromise to address direction from FERC Docket No. RM10-5-000. This approach however, sets a bad precedence. A trip path from a non-protection system component should not be classified as a protection system trip path. 3. The removal of grace periods and the comments in the FAQ that it will be up to the Auditor to determine if a test was not done due to extraordinary circumstances (example: Communications can't be tested due to the line out from a storm and under repair) is not acceptable. The SDT needs to come up with guidelines for these situations and not leave it up to each auditor to determine what is acceptable.

Response: Thank you for your comments.

1. For a Compliance Monitor to be assured of compliance, the SDT believes the Compliance Monitor will need the data of the most recent performance of the maintenance, as well as the data of the preceding maintenance to validate that entities have been in compliance since the last audit (or currently, since the beginning of mandatory compliance). The SDT specified the data retention in the posted standard to establish this level of documentation. This seems to be consistent with the current practices of several Regional Entities.
2. The trip path from a sudden pressure device is a part of the Protection System control circuitry. The sensing element is omitted from PRC-005-2 testing requirements because the SDT is unaware of industry recognized testing protocol for the sensing

Organization	Yes or No	Question 3 Comment
elements. The SDT believes that Protection Systems that trip (or can trip) the BES should be included. This position is consistent with the currently-approved PRC-005-1b, consistent with the SAR for Project 2007-17, and understands this to be consistent with the position of FERC staff. 3. FERC Order 693 directs NERC to establish maximum allowable intervals. Grace periods would not satisfy this directive.		
PPL Supply NERC Registered Organizations	No	We recommend that the final sentence of M3 and M4 be changed to, "Any of the following constitutes sufficient evidence: dated maintenance records, dated maintenance summaries, dated check-off lists, dated inspection records, dated work orders, or other equivalent documentation," and that the slightly different final sentence of M5 be similarly changed.
Response: Thank you for your comment. The SDT believes the measures should not mandate evidence, but provide examples of evidence.		
MRO NSRF	No	1. Section 5.1 (second paragraph, under the first bullet) states: "TBM can include review of recent power system events near the particular terminal. Operating records may verify that some portion of the Protection System has operated correctly since the last test occurred. If specific protection scheme components have demonstrated correct performance within specifications, the maintenance test time clock can be reset for those components." If this "actual event" can be used as proof that the Protection System operated correctly, then this should be added to M3 in the Measures section of PRC-005-2. 2. Section 2.4.1 - Sudden Pressure Relays - This question should be clarified that circuits from only EHV transformers should be considered in scope. 3. As highlighted by the NERC GMD reports EHV transformers (345, 500 & 765 kV) are critical. In addition, circuits that do not actually trip a breaker (panel lights, alarms, etc.) should not be included in the scope of components included in the maintenance and testing program.

Organization	Yes or No	Question 3 Comment
Response: Thank you for your comments. 1. Measure M3 lists possible types of evidence and states "is not limited to." Therefore, 'in-service' operations can be provided as evidence. 2. This standard applies to the BES and certain transformers less than 345kV are, therefore, included. 3. Table 5 Component Type states, "Control Circuitry associated with protective functions…" and, therefore, the circuits you reference are not included.		
Arizona Public Service Company	No	Either the FAQ or the Standard should define the bases for each interval mandated. See the response to question 2 for further details.
Response: Please see the Technical Justification document associated with Project 2007-17. Please also see Section 8.3 of the Supplementary Reference and FAQ document.		
Ingleside Cogeneration LP	No	We do not agree with the assertion in the reference and FAQs that the DC supply and control circuitry for mechanical components are part of a BES Protection System. This is not an accepted norm in the existing Standard as the Project Team claims - only an expansion in scope that was not properly vetted by the industry. If the Compliance Authorities believe that electrical components which support mechanical systems are rightfully part of the BES or BPS, then this has implications far beyond Protection System maintenance. The appropriate place to begin this determination is with Project 2010-17 Definition of the BES - where it can be fully reviewed by all affected industry stakeholders.
Response: Thank you for your comment. The trip path from a sudden pressure device is a part of the Protection System control circuitry. Sudden pressure relays, as opposed to other types of mechanical components, are installed to detect an electrical **fault** condition inside a transformer. The sensing element is omitted from PRC-005-2 testing requirements because the SDT is unaware of industry recognized testing protocol for the sensing elements. The SDT believes that Protection Systems that trip (or can trip) the BES should be included. This position is consistent with the currently-approved PRC-005-1b, consistent with the SAR for Project 2007-17, and understands this to be consistent with the position of FERC staff.		

Organization	Yes or No	Question 3 Comment
American Electric Power	No	Though the guidance provided in these documents may appear to be beneficial, we are troubled that despite the time spent on them by the drafting team, and the voluminous nature of the references, that the information contained in them essentially fades away upon approval of the standard. Rather than voluminous supplementary references, we suggest adding this information, as necessary, to the standard itself. Not only would this prove beneficial by having less information housed outside of the standard, it might help prevent the need for future CANs and interpretation requests.
Response: Thank you for your comments. The Supplementary Reference and FAQ document provides supporting discussion, but is not part of the standard. The SDT intends that it be posted as a **Reference Document** accompanying the standard. As established in SDT Guidelines, the standard is to be a terse statement of requirements, etc., and is not to include explanatory information like that included in the Supplementary Reference and FAQ document. The Supplementary Reference will be revised in the course of the revision process of the standard.		
Westar Energy	No	1. We believe all of the 4 month intervals can be changed to 6 month intervals and still ensure reliability. It is unclear which equipment Table 1-4(d) applies to. 2. In the heading it says "Excluding distributed UFLS and distributed UVLS", then the line below that says "non-distributed UFLS system, or non-distributed UVLS systems is excluded".
Response: Thank you for your comments. 1. The activity related to this interval is to verify various basic operating parameters. The SDT believes that extension of verification of these parameters beyond the interval within the standard is inappropriate. 2. These are addressing two different items; the first addresses distributed UFLS/UVLS, whether tripping at BES levels or not, and the second addresses non-distributed UFLS/UFLS/SPS that trips only non-BES interrupting devices.		
Ameren	No	We agree with the intent of the Supplement changes but believe that they are either incomplete or need clarification. Therefore, we provide the specifics as

Organization	Yes or No	Question 3 Comment
		follow : (a) Page 93, Revise Section 15.7 Distributed UFLS (i) Change Table 1-2 to 1-3.(ii) Include 'Verify operation...and/or auxiliary tripping device' to agree with Table 3. (b) Please identify BES Elements in Supplementary Reference Figure 2. (c) Remove 'Reverse power relays' from the bulleted list on the top section of page 33. They provide thermal of the steam turbine, and they may protect CTG speed reduction gear teeth, but neither of these are electrical protection of the generator. (d) Please add Interval FAQ to address a component minimum maintenance activity that is not in the present PRC-005-1 program. (i) : "How is interval proven for a component minimum maintenance activity that is not in the present PRC-005-1 program? For example, suppose the present program continuously monitors a communication system, say audio tones, and personnel respond to alarms; this approach presently have basis that is sufficient. (ii) Table 1-2 requires two maintenance activities every 12 calendar years: 1) verify channel meets performance criteria; and 2) verify essential I/O. The entity is required to perform these minimum maintenance activities one time in the first 13 years after regulatory approval. The 12 year interval is proven by the date of the PRC-005-2 maintenance activity and the date of your PRC-005-1 program applicable for the previous maintenance. After the second time the PRC-005-2 maintenance activity is performed, appropriately sometime in year 14 to 25 after regulatory approval, then interval will be proven by the dates of the two PRC-005-2 maintenance activities." (e) Page 17 We disagree with retention of maintenance records for replaced equipment as this can cause confusion. At most the last maintenance date could be retained to prove interval between it and the test date of the replacement

Organization	Yes or No	Question 3 Comment
		equipment that provides like-kind protection. (f)Page 36, FAQ 'initial date for maintenance' answer is inconsistent with CAN-0011. Though the CAN applies to PRC-005-1, it should be consistent with NERC's position on this. (g) Page 71, Please remove 'The trip path from a sudden pressure device is a part of the Protection System control circuitry...' because the actuating relay does not respond to electrical quantities. This is just one example of the many gotcha's that will no doubt arise in enforcement. (h) If a capacitor trip device is an example of a non-battery based station DC supply, then please provide a FAQ to convey it.

Response: Thank you for your comments.

a. The SDT modified the Supplementary Reference and FAQ document, as suggested.

b. The applicable facilities for a generator are listed in Section 4.2.5 of the standard. Figure 2 is a visual representation of this.

c. Reverse power relays, as discussed in your comment, do not detect Faults; but if they can trip the generator, they must be maintained per 4.2.5.

d. This issue is addressed in the Implementation Plan for Project 2007-17.

e. The records for removed/replaced equipment need to be retained to provide documentation that you were in compliance for the entire compliance monitoring period.

f. The SDT has provided guidance as it relates to PRC-005-2.

g. The trip path from a sudden pressure device is a part of the Protection System control circuitry. The sensing element is omitted from PRC-005-2 testing requirements because the SDT is unaware of industry recognized testing protocol for the sensing elements. The SDT believes that Protection Systems that trip (or can trip) the BES should be included. This position is consistent with the currently-approved PRC-005-1b, consistent with the SAR for Project 2007-17, and understands this to be consistent with the position of FERC staff.

Organization	Yes or No	Question 3 Comment
h. If the "capacitor trip device" you reference is the stored energy device for the breaker, it would not be included in Table 1-4(d).		
Central Lincoln	No	The Supplemental Reference and FAQ apparently has not kept up with definition changes and uses uncapitalized "component" "Protection System components". Please use capitals if defined terms are intended.
Response: Thank you for your comment. The SDT modified the Supplementary Reference and FAQ document as suggested.		
BAE Batteries USA	No	Page 20 states that every 18 months "battery ohmic values to station battery baseline (if performance tests are not opted)" should be changed to add comment that ohmic values, while permissible as a tool, should not be taken to validate the actual capacity, thus the reliability of the battery. If capacity is an issue due to questionable ohmic values shown, a decision must be made to [1] perform a capacity test following one of the three methodologies recorded in IEEE 450 or IEEE 1188; [2] make a decision to replace the battery string depending upon the number of cells with questionable ohmic values shown, the age of the battery string, and the critical nature of the station in question; or [3] accept the risk that the battery may or may not perform as intended due to the lack of a true knowledge of the battery capacity (See IEEE Letter to Al McMeekin). Every 18 calendar months verify/inspect the following: "Cell Condition of all individual battery cells (where visible) should add "or as frequently as recommended in the battery manufacturer's operating instructions."Every 6 years: perform or verify the following:"Battery Performance Test (if internal ohmic tests are not opted)" should be changed to read "Battery Performance Test (if ohmic tests are not conducted or if ohmic test values show that a degraded situation with the cells call into question whether the battery will perform to "design requirements."this should be repeated where referenced in additional examples (VLA, VRLA, Ni-Cd)
Response: Thank you for your comment. The drafting team agrees with your statement, and those of others concerning the true capacity of the station battery and relating it to internal ohmic measurements. Tables 1-4a, 1-4b and 1-4c have been modified for clarity, and the Supplemental Reference and FAQ document has been modified to further elaborate on these concerns.		
ExxonMobil Research and	No	: As written, the current draft of PRC-005-2 discriminates against smaller entities

Organization	Yes or No	Question 3 Comment
Engineering		that do not have a population size of 60 for each component type. Historical records provide an accurate account of how specific components have performed in their installed environment. For a set population size, increasing the number of historical data points should improve the accuracy of an entity's calculated mean time between failures, so, if you increase the period over which the historical data must be evaluated, you can compensate for a smaller segment population size. The SDT's current draft prevents smaller entities from using a larger historical data set to make up for a smaller population size when developing a performance based protective system maintenance and testing program. The SDT should reconsider allowing smaller entities to use historical records that extend for period longer than a single year in the development of a performance based program.
Response: Thank you for your comment. Small entities are permitted to aggregate their components with similar components of other entities to meet the component populations, as long as the programs are (and remain) similar – See Section 9 of the Supplementary Reference and FAQ document and the associated footnote to Attachment A. Decreasing the component population below the requirements of Attachment A will result in an unsound program due to component populations that are not statistically significant. The Supplementary Reference and FAQ document states, "Any population segment must be comprised of at least 60 individual units; if any asset owner opts for PBM but does not own 60 units to comprise a population then that asset owner may combine data from other asset owners until the needed 60 units is aggregated." Historical data may be good for trending, but may not be suitable for judging current maintenance program effectiveness.		
TransAlta Centralia Generation LLC	Yes	More detail explanation on Segment is required; the reason of sixty (60) individual components is required for one Segment. More detail explanation on Countable Event is required.
Response: Thank you for your comments. The SDT believes that Segment and Countable Events are clearly stated in the standard. Decreasing the component population below the requirements of Attachment A will result in an unsound program due to component populations that are not statistically significant.		
City of Austin dba Austin Energy	Yes	The effort expended by the SDT in creating and revising the content of the

Organization	Yes or No	Question 3 Comment
		Supplemental Reference and FAQ is admirable and most appreciated. The guide is a useful reference.
Response: Thank you for your comment and support.		
Los Angeles Department of Water and Power	Yes	LADWP notices that the terms "Unresolved Maintenance Issue" and "maintenance-correctable issue" are used in several places. We recognize that "Unresolved Maintenance Issue" is defined as a deficiency identified during a maintenance activity that causes the component to not meet the intended performance and requires follow-up corrective action. Please define "maintenance-correctable issue" and clarify the differences between the two terms.
Response: Thank you for your comments. "Unresolved Maintenance Issue" replaced the term "maintenance-correctable issue," and the SDT corrected the Supplementary Reference and FAQ document to reflect the change.		
Progress Energy		1. Table 3, Row 7: The requirement to "Verify electrical operation of electromechanical lockout and/or tripping auxiliary devices" contradicts Section 15.7, bullet 2 of the Supplementary Reference and FAQ document. In the supplementary reference, the phrase "and/or auxiliary tripping device(s)" has been struck out.
Response: Thank you for your comments. The Supplementary Reference and FAQ document has been modified per your suggestion.		
EPRI	No	see comments in question 1
Northeast Power Coordinating Council	Yes	
Tacoma Public Utilities	Yes	
Imperial Irrigation District (IID)	Yes	
Southwest Power Pool Standards Development Team	Yes	

Organization	Yes or No	Question 3 Comment
Tennessee Valley Authority	Yes	
PNGC Comment Group	Yes	
Bonneville Power Administration	Yes	
ACES Power Marketing Standards Collaborators	Yes	
Southern Company Generation	Yes	
Kansas City Power & Light	Yes	
Edison Mission Marketing & Trading	Yes	
Alber Corporation	Yes	
Independent Electricity System Operator	Yes	
Liberty Electric Power LLC	Yes	
Entergy Services	Yes	
ATCO Electric Ltd	Yes	
Manitoba Hydro	Yes	
US Bureau of Reclamation	Yes	
American Transmission Company, LLC	Yes	
CenterPoint Energy	Yes	
Xcel Energy	Yes	
Duke Energy	Yes	
PNM Resources	Yes	
Response: Thank you for your support.		

4. If you have any other comments on this Standard that you <u>have not already provided in response to the prior questions</u>, please provide them here.

Summary Consideration: Several comments were repeated from Questions 1, 2, or 3, and the summary consideration responses are not repeated here.

Numerous commenters suggested minor changes to the definition of the terms "inspect" and "Countable Event." In response, the SDT modified the description of the term, "inspect" within the definition of PSMP. Previously "inspect" was "Examine for signs of component failure, reduced performance or degradation." now "inspect" is "Examine for signs of component failure, reduced performance or degradation." The SDT also modified the definition of Countable Event from "A Component which has failed and requires repair or replacement…" to "A failure of a Component requiring repair or replacement …"

The SDT continued to receive comments regarding the Applicability of the standard. The SDT modified the Applicability Clause 4.2.5.4 to read: "Protection Systems for station service or excitation transformers connected to the generator bus of generators which are part of the BES, that act to trip the generator either directly or via lockout or tripping auxiliary relays."

Some commenters questioned the last line in Table 1-2 for Communications Systems. The SDT realized they had several errors in the table – one omitted element and one incorrect interval. The table was corrected.

Several comments were offered regarding the station battery activities in Tables 1-4 (a-f). Representatives of the IEEE Stationary Battery Committee assisted the SDT in making revisions to these tables to address concerns related to ohmic testing of the cell/units.

Several commenters questioned elements of the criteria in Attachment A for performance-based maintenance; the SDT explained the rationale for these criteria, including, where appropriate, the related statistical basis.

Several comments pointed out inconsistencies between the Standard and Supplementary Reference and FAQ. The SDT modified the Standard and Supplementary Reference and FAQ to address these inconsistencies.

A few commenters questioned portions of the standard, or suggested changes that the SDT chose not to adopt. The SDT responded with their rationale. These comments included:

- **NERC should provide a format for test reports, etc.**
- **Include batteries within a performance-based PSMP**
- **Objections to the inclusion of distribution devices that are installed for the benefit of the BES**

- **VSLs permitting entities to experience some small level of non-performance relative to the standard without incurring a violation**
- **VSLs set at inappropriate levels**
- **The inclusion of the control circuitry related to sudden pressure relays, even though sudden pressure relays themselves are not included**
- **Various facets of control circuitry maintenance**
- **Specific intervals or activities within the tables**
- **Evidence retention language**
- **Intervals for lockout relays**
- **Voltage and current sensing devices**

Organization	Yes or No	Question 4 Comment
Northern Indiana Public Service Co.	Negative	A format for maintenance reports and specific test requirements for relays are missing.
Response: Thank you for your comments. The SDT does not believe it is necessary or appropriate to prescribe a specific format for maintenance results or test requirements.		
James A Maenner	Negative	As written, the standard may require DPs to include distribution protection devices designed to isolate and protect distribution facilities from faults on monitored transmission or other BES facilities. Qualifying language should be added differentiate protective systems which control BES and distribution facilities for faults on the BES.
Response: Thank you for your comments. PRC-005-2 specifically addresses Protection Systems that are installed for the purpose of detecting Faults on BES Elements, even if they are installed on distribution facilities. UFLS and UVLS devices which are commonly installed on distribution facilities for the purposes of addressing related NERC Standards are included. Protection Systems installed on distribution facilities for the purposes of detecting Faults on distribution facilities are not included.		
SERC Reliability Corporation	Negative	FERC Order 758 includes directives that affect this project. I understand that the

Organization	Yes or No	Question 4 Comment
		SPCS/SAMS group is looking at the technical documents to support additional standards activity but as this project is presented, it does not meet the FERC directives. Otherwise, I could vote affirmatively, but I do have some concerns about how clearly and unambiguously the standards requirements are written. This standard should be a candidate for the RSAW initiative being developed by the Standards Committee.
Response: Thank you for your comments. The Standards Committee has directed the PSMTSDT to finalize PRC-005-2 and present it to the NERC Board of Trustees for adoption, and concurrent with this posting of PRC-005-2 to post for information a draft SAR for a second phase of Project 2007-17 addressing further modifications to PRC-005-2. FERC Order 758 includes directives associated with Maintenance and Testing of Auxiliary and Non-Electrical Sensing Relays, Reclosing Relays, and DC Control Circuitry. Regarding these directives in relation to PRC-005-2: 1. Testing of Auxiliary and Non-Electrical Sensing Relays – The NERC System Protection and Control Subcommittee (SPCS) recently worked with NERC staff to develop an informational filing in response to Order 758. Activities associated with the schedule submitted in the filing will be included in a final SAR to establish a future phase of Project 2007-17 for future development of PRC-005. A draft SAR is posted on the project page for information only. 2. Reclosing relays will be addressed in a second phase of this project, which will produce PRC-005-3. Development of that revision will begin after PRC-005-2 is completed and the NERC SPCS completes the technical documentation regarding reclosing relays. 3. DC Control Circuitry and Components – This draft standard PRC-005-2 includes extensive, specific maintenance activities (with maximum maintenance intervals) related to the DC control circuits.		
Southwest Transmission Cooperative, Inc.	Negative	1. For the Requirement R1's High VSL, "entities'" should be "entity's" to be consistent with the other VSLs. 2. It is not clear why missing three component types jumps to a Severe VSL. Missing two is a Moderate VSL. Missing three should be a High VSL.
Response: Thank you for your comments.		

Organization	Yes or No	Question 4 Comment
1. The SDT has corrected the Requirement R1 VSL, as you suggest. 2. The SDT believes that missing three components is considered a "significant percentage," and is in accordance with the VSL guidelines.		
Midwest ISO, Inc.	Negative	In the VSL for Table 4 it seems that the phrase "5% or less" should be "not more than 5%". With the original language it seems like an entity could be found to have an R4 lower VSL violation for "failure" of zero meaning they had done no testing. This VSL is written in the negative and should be rewritten in the positive.
Response: Thank you for your comments. The VSL Guidelines, developed in accordance with FERC's VSL Order, establish the Lower VSL for stepped VSLs as "5% or less," the Medium VSL as "more than 5% but less than (or equal to) 10%," the High VSL as "more than 10% up to (and including) 15%," and the Severe VSL as "more than 15%."		
Lincoln Electric System	Negative	Please refer to comments submitted by the MRO NERC Standards Review Forum for LES' concerns related to PRC-005-2.
Western Area Power Administration	Negative	Please see comments provided on Official Comment Form
Minnkota Power Cooperative, Inc.	Negative	
Lakeland Electric	Negative	Please see FMPA comments
Kissimmee Utility Authority	Negative	Please see separately submitted FMPA comments.
Baltimore Gas & Electric Company	Negative	Please see the issues raised in the Comment Form submitted on behalf of Constellation.
Occidental Chemical	Negative	See comments submitted by Ingleside Cogeneration LP
Dairyland Power Coop.	Negative	See MRO NSRF comments.
U.S. Army Corps of Engineers	Negative	See MRO/NSRF comments
Dairyland Power Coop.	Negative	See NSRF comments.
Beaches Energy Services	Negative	The applicability of the standard should be modified to reflect the FERC approved interpretation PRC-005-1b Appendix 1 that basically says that applicable Protection Systems are those that protect a BES Element AND trip a BES Element. The

Organization	Yes or No	Question 4 Comment
		interpretation states: The applicability as currently stated will sweep in distribution protection: “4.2.1 Protection Systems that are installed for the purpose of detecting Faults on BES Elements (lines, buses, transformers, etc.)” Many (most) network distribution systems that have more than one source into a distribution network will have reverse power relays to detect faults on the BES and trip the step-down transformer to prevent feedback from the distribution to the fault on the BES. This is not a BES reliability issue, but more of a safety issue and distribution voltage issue. These relays would be subject to the standard as the applicability is currently written, but, should not be and they are currently not within the scope of PRC-005-1b Appendix 1 because the step-down transformer (non-BES) is tripped and not a BES Element (hence, the "and" condition of the interpretation is not met). There are many other related examples of distribution that might be networked or have distributed generation on a distribution circuit where such reverse power relays, or overcurrent relays with low pick-ups, are used for safety and distribution voltage control reasons and are not there for BES Reliability. To make matters worse, for these Reverse Power relays, it is pretty much impossible to meet PRC-023 because the intent of the relay is to make current flow unidirectional (e.g., only towards the distribution system) without regard for the rating of the elements feeding the distribution network. So, if these relays are swept in, and if they are on elements > 200 kV, then the entity would not be able to meet PRC-023 as that standard is currently written. So, the SDT should adopt the FERC approved interpretation.

Response: Thank you for your comments.

The SDT believes that the Applicability, as stated in PRC-005-2, is correct and supports the reliability of the BES. The SDT observes that the approved Interpretation addresses the term, “transmission Protection **System**,” and notes that this term is not used within PRC-005-2; thus the interpretation does not apply to PRC-005-2. PRC-005-2 specifically addresses Protection Systems that are installed for the purpose of detecting Faults on BES Elements.

To address your concern, the distribution protective devices and functions cited in this comment are not “installed for the purpose of detecting Faults on BES Elements,” and would, therefore, not be subject to PRC-005-2. A relay used primarily for “safety and distribution voltage control reasons” is clearly not “installed for the purpose of detecting Faults on BES Elements.” The reverse

Organization	Yes or No	Question 4 Comment
power relay application described is also not “installed for the purpose of detecting Faults on BES Elements” (the relays react to changes in power flow direction, which may or may not be due to a Fault) but for the purpose of preventing feedback from the distribution system to the transmission system. Please see the PRC-005-2 Supplementary Reference and FAQ, Section 2.3, for a more detailed discussion of this issue.		
U.S. Bureau of Reclamation	Negative	1. The definition for PSMP is incongruous with the use of the PSMP in Requirement R1. Requirement R1, including the Measure and VSL focus on the identification of maintenance method of the Component types and not that the PSMP is in fact being used for maintenance of the component. 2. The requirement R5 indicates the entity has to "demonstrate" efforts to correct identified unresolved maintenance issues. The measure M5 described documentation of the efforts. The requirement language should be explicit. Does the standard want a demonstration which implies active role of the entity to prove what it is doing, or to provide documentation of the activities underway to correct deficiencies? The language in the requirement should be altered to "Each Transmission Owner, Generator Owner, and Distribution Provider shall prepare a CAP for each identified Unresolved Maintenance Issue." A second requirement is needed to require that "Each Transmission Owner, Generator Owner, and Distribution Provider shall complete its CAP to correct the identified Unresolved Maintenance Issues." The measures would need to be adjusted accordingly to reflect the CAP and evidence that the entity completed the CAP. 3. Re Terms defined for use only within PRC-005-2: The standard provides definitions which will not be incorporated into the Glossary of Terms. This would allow the definitions as used in this standard to conflict with the definition used in other standards if this practice becomes more widespread and would reduce the cohesiveness of the standard set. 4. Re The definition of Components: The standard defined what constitutes a

Organization	Yes or No	Question 4 Comment
		control circuit as a component type with "Control circuitry associated with protective functions through the trip coil(s) of the circuit breakers or other interrupting devices." The standard then modified the definition by allowing "a control circuit Component is dependent upon how an entity performs and tracks the testing of the control circuitry." The definition should not be dependent upon practice. This makes the definition a fill in the blank definition. Either eliminate the allowance or remove the definition of control circuit.
Response: Thank you for your comments. 1. The SDT believes that the definition of a PSMP is linked to Requirement R1 in that the entity's program shall include one or all of the parameters in the definition. Requirement R1 requires that the entity establish their program and is the foundation for the standard. Requirements R3-R4 address implementation of the entity's PSMP. 2. The term within Requirement R5, "… demonstrate efforts …" is intended for both – that the entities are acting to correct the deficiency and also (to prove compliance) maintaining documentation of the activities underway to correct the deficiency. The SDT elected to not require a "Corrective Action Plan," as defined in the NERC Glossary of Terms, to avoid much of the systemic, ongoing documentation attendant to that term. However, if an entity wishes to use a Corrective Action Plan as defined, that would be an acceptable method of meeting Requirement R5. 3. The standard specifies that the terms used are intended for this document only; and, therefore, there should not be any conflict with their use in any other PRC standard. 4. The intent of the different means of identifying control circuitry was to accommodate various entities' philosophies on testing of these circuits. Regardless of how an entity chooses to identify their control circuitry, the entity must meet the requirements of the standard regarding maintenance of control circuitry.		
Independent Electricity System Operator	Negative	The IESO continues to disagree with the VRF assigned to the new Requirements R3 and R4. R3 and R4 ask for implementing the maintenance plan (and initiate corrective measures) whose development and content requirements (R1 and R2) themselves have a Medium VRF. Failure to develop a maintenance program with the attributes specified in R1, and stipulation of the maintenance intervals or performance criteria as required in R2, will render R3/R4 not executable. Hence, we reiterate our position that the VRF for R3 be changed to Medium.

Organization	Yes or No	Question 4 Comment
Response: Thank you for your comments. The SDT team disagrees and believes the failure to implement a PSMP should be assigned a VRF of High.		
Illinois Municipal Electric Agency	Negative	The inconsistency between the proposed Protection System language in the Applicability section of PRC-005-2 and the transmission Protection System interpretation recently approved by FERC (PRC-005-1b Appendix 1) needs to be resolved.
Response: The SDT believes that the Applicability, as stated in PRC-005-2, is correct and supports the reliability of the BES. The SDT observes that the approved Interpretation addresses the term "transmission Protection System," and notes that this term is not used within PRC-005-2; thus, the interpretation does not apply to PRC-005-2. PRC-005-2 specifically addresses "Protection Systems that are installed for the purpose of detecting Faults on BES Elements." Please see Section 2.3 of the Supplementary Reference Document for additional discussion.		
Central Lincoln PUD	Negative	The percentage based VSL unreasonably penalizes smaller entities, since one Component can cause them to hit the 10% cutoff for a High VSL while a large entity may miss 100s of components without exceeding the Lower VSL.
Response: Thank you for your comments. A smaller entity will have less to maintain in accordance with the standard; and, thus, the percentages are still appropriate.		
JEA	Negative	This standard greatly expands the scope of work that will be required of JEA without providing a corresponding incremental increase in reliability and may in fact cause reliability issues. Specific concerns are that JEA believes that we do continuous monitoring of a vast majority of our components and our approach has demonstrated its effectiveness but the revised standard will most likely require JEA to have to adopt a new approach with significant increases in manpower hours. Additionally, testing lockouts is of great concern because of its ability to cause reliability issues.
Response: Thank you for your comments. The SDT believes that performing these maintenance activities will benefit the reliability of the BES. If your components are monitored according to the attributes specified in Table 1-1 through 1-5, you may be able to utilize the extended intervals/minimized		

Organization	Yes or No	Question 4 Comment
activities associated with those monitoring attributes within the tables. The SDT believes that electromechanical lockout relays need periodic operation. As such, these devices are required to be exercised at the same six-year interval required for electromechanical relays. The SDT recognizes the risk of 'human error' trips when testing lockout devices, but believes these risks can be managed. Performance-based maintenance is an option if you want to extend your intervals beyond six years.		
City and County of San Francisco	Negative	VSL's are based upon Failure to Maintain Percentages for "a specific Protection System component type". VSL's should be based upon Failure to Maintain Percentages for total number of Protection System components, and not give greater weight in the VSL determination, to component types with few elements, like station batteries.
Response: Thank you for your comments. The SDT believes that these VSLs should address failures to maintain percentages of each Component Type. Failure to maintain quantities of low-population Component Types, such as station batteries, may have serious consequences for BES reliability, and the SDT believes that these must not be masked by larger populations of other Component Types, such as protective relays.		
Gainesville Regional Utilities	Negative	We support FMPA's position on this matter.
Response: Thank you for your comments. Please see our response to FMPA's comments.		
Blachly-Lane Electric Co-op	Affirmative	Please see "PNGC Comment Group" for our comments.
Georgia Power Company	Affirmative	Refer to Comments submitted by Antonio Grayson.
Georgia Transmission Corp.	Affirmative	
Western Electricity Coordinating Council	Affirmative	
SMUD	Affirmative	
Western Farmers Electric Cooperative	Affirmative	
Central Electric Cooperative, Inc. (Redmond, Oregon)	Affirmative	Please see "PNGC Comment Group" for our comments.
Clearwater Power Co.	Affirmative	Please see "PNGC Comment Group" for our comments.
Consumers Power Inc.	Affirmative	Please see "PNGC Comment Group" for our comments.

Organization	Yes or No	Question 4 Comment
Coos-Curry Electric Cooperative, Inc	Affirmative	Please see "PNGC Comment Group" for our comments.
Fall River Rural Electric Cooperative	Affirmative	Please see "PNGC Comment Group" for our comments.
Lane Electric Cooperative, Inc.	Affirmative	Please see "PNGC Comment Group" for our comments.
Northern Lights Inc.	Affirmative	Please see "PNGC Comment Group" for our comments.
Pacific Northwest Generating Cooperative	Affirmative	Please see "PNGC Comment Group" for our comments.
Raft River Rural Electric Cooperative	Affirmative	Please see "PNGC Comment Group" for our comments.
Umatilla Electric Cooperative	Affirmative	Please see "PNGC Comment Group" for our comments.
West Oregon Electric Cooperative, Inc.	Affirmative	Please see "PNGC Comment Group" for our comments.
Ohio Edison Company	Affirmative	Please see FirstEnergy's comments submitted through the formal comment period.
MidAmerican Energy Co.	Affirmative	Please see MidAmerican and MRO NSRF Comments.
Madison Gas and Electric Co.	Affirmative	Please see MRO NSRF comments
Great River Energy	Affirmative	Please see MRO NSRF comments.
Omaha Public Power District	Affirmative	Please see MRO NSRF Comments.
Muscatine Power & Water	Affirmative	Please see the comments submitted by MRO NSRF
North Carolina Electric Membership Corp.	Affirmative	Please see the formal comments submitted by ACES Power Marketing.
Midwest ISO, Inc.	Affirmative	See Comments submitted by the MRO NSRF.
MidAmerican Energy Co.	Affirmative	See MidAmerican and NSRF comments
Southwest Transmission Cooperative, Inc.	Affirmative	1. The first part of definition of a Countable Event should be modified as follows: “The failure of a Component such that it requires repair or replacement...”. As it is currently word, it is technically counting the Component as the Countable Event and not the failure of the component. Considering that the other two items that are Countable Events are conditions and misoperations, it seems appropriate to

Organization	Yes or No	Question 4 Comment
		make failure the Countable Event. 2. Application of this standard to UFLS is problematic as worded in Section 4.2.2. The UFLS are only applicable if "installed per ERO underfrequency load-shedding requirements". Technically, no UFLS fits this description because there are no ERO requirements to have a UFLS. PRC-006-0 was never approved by the Commission and is not enforceable. The Commission considered it a "fill-in-the-blank" standard. While PRC-006-1 corrects the "fill-in-the-blank" issues and was approved by the NERC BOT November 4, 2010, the Commission has yet to act on it. 3. The data retention requirement for the Protection System Maintenance Program documentation seems excessive. The Data Retention section states that all versions since the last compliance audit must be maintained. Since TOs, GOs, and DPs are all on six year audit cycles, this would require maintaining this documentation for six years. Is this really necessary? The length could become even greater once NERC implements registered entity assessments that could shorten or lengthen the periods between compliance audits. The data retention requirements for Requirements R2, R3, R4, and R5 are not consistent with NERC Rules of Procedure. Section 3.1.4.2 of Appendix 4C - Compliance Monitoring and Enforcement Program states that the compliance audit will cover the period from the day after the last compliance audit to the end date of the current compliance audit. The data retention requirements compel the registered entity to retain documentation for the longer of "the two most recent performances of each distinct maintenance activity for Protection System Components, or all performances of each distinct maintenance activity for the Protection System Component since the previous scheduled audit date". While it may have been intended to apply to both clauses, the "since the previous schedule audit date"

Organization	Yes or No	Question 4 Comment
		only applies to the second clause. Since some of the maintenance activities have intervals of 12 years, this would require the registered entity to retain documentation for 24 years which cannot be audited since it is outside the audit window per the Rules of Procedures. At a minimum, we suggest clarifying that the documentation must not be maintained past the day after the last audit completion date. 4. In the fourth paragraph of the Data Retention section, Component is not used consistently. It is used in both singular and plural form. It seems like it should be one or the other. 5. Requirement R1 VSLs: For the High VSL, "entities'" should be "entity's" to be consistent with the other VSLs. 6. It is not clear why missing three component types jumps to a Severe VSL. Missing two is a Moderate VSL. Missing three should be a High VSL.

Response: Thank you for your comments.

1. The SDT agrees with your comments on Countable Event, and has modified the definition of Countable Event to: "A failure of a Component requiring …"
2. Applicability Clause 4.2.2 applies to whatever ERO-required UFLS that may exist, either today or in the future. NERC Reliability Standard PRC-006-1 has now been approved by FERC.
3. The SDT believes that all versions of the entity's PSMP should be retained for audit purposes. For a Compliance Monitor to be assured of compliance, the SDT believes the Compliance Monitor will need the data of the most recent performance of the maintenance, as well as the data of the preceding maintenance to validate that entities have been in compliance since the last audit (or currently, since the beginning of mandatory compliance). The SDT has specified the data retention in the posted standard to establish this level of documentation.
4. The SDT has corrected the fourth paragraph of the Evidence Retention section as you suggested.
5. The SDT has corrected the Requirement R1- High VSL, as you suggested.
6. The SDT believes that missing three components is considered a "significant percentage," and is in accordance with the VSL

Organization	Yes or No	Question 4 Comment
Guidelines.		
Oncor Electric Delivery	Affirmative	The proposed consolidation of these standards (PRC-005-1, PRC-008-0, PRC-11-0 and PRC-017-0) provides more clarity and less room for varying interpretations for relay maintenance and testing.
Response: The SDT thanks you for your comment and affirmative vote.		
Southern Company Generation		For the 18 month / 6 year activities, it is technically incorrect to allow equivalency between internal ohmic measurements and performance testing. This view is not substantiated by industry experience, documentation, or standards. Additionally, it should be specified to the auditor that the intervals for the battery maintenance are relevant to the component, not the application. This means that if a battery is replaced just before a required 6 year performance test, the 6 year interval for the performance test is reset.
Response: Thank you for your comment. The drafting team agrees with your statement, and those of others concerning the true capacity of the station battery and relating it to internal ohmic measurements. Tables 1-4a, 1-4b and 1-4c have been modified for clarity, and the Supplemental Reference and FAQ document will be modified to further elaborate on these concerns. The SDT agrees with your assessment that the maintenance activity is relevant to the component, not the application. Guidance to the auditors of this nature is beyond the ability of the SDT. See Section 4.1 of the Supplementary Reference and FAQ document for additional discussion on this topic.		
Ameren		(a) R3 & R4: Change VRF to “Medium” for the following reasons: (i) Consistency with existing standards that PRC-005-2 replaces. Per the VRF_Standards_Applicability_Matrix_2012-03-01, PRC-005-1b R2 VRF is Lower, PRC-008-0 R2 VRF is Medium, PRC-011-0 R2 VRF is Lower, and PRC-017-0 R2 VRF is Lower. (ii) We are not aware that lack of Protection System maintenance alone has directly caused or contributed to bulk electric system instability, separation, or a cascading sequence of failures. (iii) Many entities do not presently perform several of the proposed minimum maintenance activities, and/or perform maintenance activities at greater than the PRC-005-2 maximum interval. Yet BES system instability, separation, or cascading sequence of failure events are extremely rare. (iv) Either change VRF to

Organization	Yes or No	Question 4 Comment
		Medium, or double the percentage ranges applied to each component type across VSLs. We strongly believe that the SDT needs to retune these to match the experienced risk, which has been extremely low. (b) Measure M3 on page 6 should only apply to 99.5% of the components. Please revise to state: "Each ... shall have evidence that it has implemented the Protection System Maintenance Program for 99.5% of its components and initiated...." We believe that PRC-005-2 unrealistically mandates perfection without providing technical justification. A basic premise of engineering is to allow for reasonable tolerances, even Six Sigma allows for defects. Requiring perfection may well harm reliability by distracting valuable resources from higher priority duties concerning the Protection System. We are not asking for the VSL to be changed. The consequence of a very small number of components having a missed or late maintenance activity is insignificant to BES reliability. Our proposed reasonable tolerance sets an appropriate level of performance expectation. We disagree with the notion that this is "non-performance". (c) Measure M5 - add 'internal inventory / parts request, trouble investigation assignment, trouble repair report' as examples of an entity undertaking efforts with internal parts and/or labor resources. (d) Augment R3 and R4 VSL with a 'number based limit for populations up to 100 components' for comparable treatment of small entities. For example, for Lower VSL restate as '...the responsible entity failed to maintain from one to five Components if total Components is less than 100; or 5% or less of the total Components if total exceeds 99 included within a specific Protection System Component Type...'. Otherwise a small entity could unfairly incur a Severe violation for the same number of Components that a larger entity would incur a Lower VSL. (i) Similarly, Moderate numbers should be 6 to 10; High 11 to 15; and Severe 16 or more if the total Components of a certain Component Type that is less than 100. (e) Augment R5 VSL with percentage based limits for comparable treatment of larger entities. For example, for Lower VSL restate as 'The responsible entity failed to undertake efforts to correct 5 or less Unresolved Maintenance Issues if total of such issues in the audit period is less than 100; or 5% or less if total of such issues in the

Organization	Yes or No	Question 4 Comment
		audit period exceeds 99.' (i) Similarly, Moderate numbers should be >5% to 10%; High >10% to 15%; and Severe more than 15% if the total Unresolved Maintenance Issues in the audit period exceeds 99. (f) Please number all pages of the standard. They are missing from pages with tables. (g) Please add a title to the table following Table 3. Is it a continuation of Table 3?
Response: Thank you for your comments. a) The SDT disagrees, and believes a VRF of High is appropriate for Requirements R3 and R4. b) NERC criteria for VSLs do not currently permit them to allow some level of non-performance without being in violation. c) The SDT agrees that the examples listed would constitute evidence of undertaking efforts to correct Unresolved Maintenance Issues; however, Measure M5, as written, includes the phrase, "… includes but is not limited to …" to emphasize that entities may use other evidence. d) The SDT disagrees and believes a smaller entity will have less to maintain in accordance with the standard; and, thus, the percentages are still appropriate. e) The SDT disagrees and believes the VSL's for Unresolved Maintenance Issues should be a numeric quantity and not a percentage. In response to each of the comments 'a' through 'e', the SDT recommends reviewing the "VRF/VSL Justification" that is posted with the standard. This document provides the SDT's analysis of how the VRFs and VSLs meet FERC and NERC guidelines, as required for the standard to achieve regulatory approval. f) The SDT numbered all the pages. g) The SDT corrected the Table 3 header issue.		
Sacramento Municipal Utility District		1) SMUD wishes to comment on the requirement to test the trip paths from relays that do not respond to electrical quantities. In two separate sections of the FAQ, the SDT included this new guidance on the trip paths. In section 2.4.1 of the FAQ, the SDT plainly asserts that the trip path from Sudden Pressure Relays (SPR) will now be covered and implies that the trip paths from non-electrically initiated devices might also be covered. In section 2.4.1, the SDT does not provide any guidance on how to determine which trip paths are included, but does provide guidance on how one might test the trip path. In section 15.3, the SDT finally provides the guidance -

Organization	Yes or No	Question 4 Comment
		control circuits (trip paths) are included if the relay is installed to detect faults on BES Elements. In reviewing the definition of Protection System, SMUD feels the "Control circuitry associated with protective functions..." to be in reference to the "Protective relays which respond to electrical quantities". The SDT is now applying a new interpretation in which each of the five bullets is considered separately. Furthermore, the SDT appears to be defining "...associated with protective functions..." to mean detecting faults on the BES. What basis can the SDT offer for defining this phrase to mean detecting faults on the BES? Since this same wording is not used in defining the relay, can a relay be covered under the standard, but not its control circuitry? For instance, Out of Step Tripping? Over Excitation? Frequency or Voltage Protection on a generator? These relays respond to electrical quantities, but are not applied to detect faults on BES Elements. SMUD believes this interpretation takes us down a very confusing path. SMUD respectively requests the SDT strike the new wording (as seen on the redlined version) in 2.4.1 and 15.3.

Response: Thank you for your comments.

1. DC trip circuit from a sudden pressure relay output to the trip coil of the interrupting device has always been included in the "Control circuitry" portion of a Protection System, and is discussed in Section 15.3 of the PRC-005-2 Supplementary Reference and FAQ document. In regards to including sudden pressure relays themselves, FERC, in Order 758, recently directed NERC to submit an informational filing providing a schedule for addressing sudden pressure relays in PRC-005. The NERC System Protection and Control Subcommittee (SPCS) worked with NERC staff to develop the informational filing, which was filed with FERC on April 12, 2012. The Standards Committee has directed the PSMTSDT to finalize PRC-005-2 and present it to the NERC Board of Trustees for adoption, and concurrent with this posting of PRC_005-2, to post for information a draft SAR for a second phase of Project 2007-17 addressing further modifications to PRC-005-2.

Activities associated with the schedule submitted in the filing will be included in the final SAR to further develop PRC-005. The SDT believes that Protection Systems that trip (or can trip) BES Elements due to a Fault should be included (in the case of a Sudden Pressure Scheme, the control circuitry and DC supply components would apply). The relays mentioned are already covered by the standard, in that they are "Protection Systems that act to trip the generator either directly or via lockout or auxiliary tripping relays."

Organization	Yes or No	Question 4 Comment
Tennessee Valley Authority		1. Regarding the functional test required every 3 months for "unmonitored communication systems" in Table 1-2 of the PRC-005-2 Draft. TVA feels that a Maximum Maintenance Interval for the Functional Test should be every 12 months until auto-checkback has been fully implemented by the utility. 2. The Implementation Plan for PRC-005-2 Step 4 on Page 2 states: "The Implementation Schedule set forth in this document requires that entities develop their revised Protection System Maintenance Program within twelve (12) months following applicable regulatory approvals, or in those jurisdictions where no regulatory approval is required, on the first day of the first calendar quarter twenty-four (24) months following NERC Board of Trustees adoption. This anticipates that it will take approximately twelve (12) months to achieve regulatory approvals following adoption by the NERC Board of Trustees." TVA feels that this is not sufficient time to implement full auto-checkback capability at some utilities. The time schedule of twelve (12) months should be forty-eight (48) months following applicable regulatory approvals. 3. TVA has many excitation transformers directly connected to the generator bus, configured such that a fault on the excitation transformer will cause a generator trip. Is the intent that the revised standard will include these transformers in the applicability? Would they be included by section 4.2.5.1? 4. TVA (Rusty Hardison) has forwarded a slide presentation with six questions to the PRC-005-2 Draft Team requesting consideration as input to the Frequently Asked Questions document accompanying the standard. Thank you for considering.

Response: Thank you for your comments.

1) The SDT believes the four month interval is proper for unmonitored communications systems. The activity related to this interval is to verify basic operating status.

2) The Implementation Plan is intended to facilitate implementation of the standard, not to facilitate modifications to meet the requirements of the standard.

3) The SDT revised Applicability Clause 4.2.5.4 to include excitation transformers connected to the generator bus.

Organization	Yes or No	Question 4 Comment
4) The SDT modified the Supplementary Reference and FAQ document to address these questions.		
Tacoma Public Utilities		1. For components that are part of a time-based PSMP, if correction of Unresolved Maintenance Issues takes place before the maximum maintenance interval expires, is it mandatory to demonstrate (document) these efforts to correct identified Unresolved Maintenance Issues? Is the purpose of Requirement R5 only to avoid compliance jeopardy when an entity discovers a problem during maintenance but cannot correct the problem until after the maximum maintenance interval has expired (as discussed in the Supplemental Reference and FAQ document)? Or, is the purpose also to ensure that all Unresolved Maintenance Issues are documented even if they corrected very quickly and within the maximum maintenance intervals and just considered part of routine maintenance (i.e., Unresolved Maintenance Issues not explicitly documented) in a manner similar to recalibrating a relay? 2. Assume that a component under a time-based PSMP is not considered "monitored" per the PSMP, but in actuality it is. If an alarm comes in, indicating a component problem, would the entity have any additional documentation obligations under PRC-005-2 associated with this alarm, provided that all minimum maintenance activities and maximum maintenance intervals associated with the unmonitored component are satisfied? The concern is that, if there are additional documentation obligations; then many entities may disable monitoring in some cases in order to avoid compliance jeopardy. 3. Assume that an entity treats batteries at certain remote communication sites as if they were applicable to PRC-005-2. These sites are not substations or generating facilities but support the broad communication system, including teleprotection functions. Furthermore, these sites have limited access during some times of the year because of heavy snow or ice. It is conceivable that it may not be possible to meet all minimum maintenance activities or all maximum maintenance intervals (4 and 6 calendar months) unless the site is extensively monitored and/or field personnel expose themselves to hazard. Would any allowances be made in these cases? Would

Organization	Yes or No	Question 4 Comment
		these sites even be applicable to PRC-005-2, since they are not part of a "station" DC supply? 4. It is still unclear whether Section 15.3 permits periodically verifying DC voltage at the actuating device trip terminals as an acceptable method of accomplishing the maintenance activity identified in Table 1-5 for unmonitored control circuitry associated with protective functions. It is recommended that this approach be considered acceptable, provided that auxiliary relays are operated within the maximum maintenance interval. 5. In the Implementation Plan for Requirements R1, R2, and R5, why there is a requirement to "be 100% compliant [with R5] on the first day of the first calendar quarter twelve (12) months following applicable regulatory approvals"? The emphasis of this question is on Requirement R5, which pertains to Unresolved Maintenance Issues. 6. In the Implementation Plan for R3 and R4, to be considered "100% compliant with PRC-005-2," is it only necessary to have completed the applicable minimum maintenance activities one time for the applicable component (which is our assumption)? Or, does being considered 100% compliant under this Implementation Plan imply that two instances of the applicable minimum maintenance activities must have been completed for the applicable component?

Response: Thank you for your comments.

1. The definition of Unresolved Maintenance issue has been revised to specify that it applies to deficiencies that "…cannot be corrected during the maintenance interval..."
2. The SDT believes that as long as all minimum maintenance activities and maximum maintenance intervals associated with a component are completed and documented, no additional documentation obligations are necessary.
3. The SDT does not believe that the scope of the standard refers to communication sites. The SDT believes that a loss of power to the communications systems at a remote site would cause the communications systems associated with protective relays

Organization	Yes or No	Question 4 Comment
to alarm at the substation. At this point, the corrective actions can be initiated. 4. The SDT believes that every trip path from relay to trip coil must be verified. If a trip coil has multiple trip paths, verifying DC voltage at the actuating device would not accomplish the maintenance activity identified in Table 1-5 for unmonitored control circuitry. 5. The SDT believes that the entity be 100% compliant with Requirement R5 on the first day of the first calendar quarter because an Unresolved Maintenance Issue could arise during the first calendar quarter. 6. The Implementation Plan addresses the initial performance of the required activity within the required intervals. The entity should expect to comply with PRC-005-1B until they fully implement PRC-005-2.		
Texas Reliability Entity		1. The Implementation Plan is still overly long and complicated. Registered Entities and Regional Entities will have to track and apply multiple versions of this standard for up to 14 years. It would be preferable to have a much shorter implementation plan, so that only one version of the standard will be applicable at any given time, recognizing that for some Components no action will be required under the standard for a number of years. 2. Referring to R3, R4 and M1 (and other places), it is redundant to add “Protection System” to describe “Components “or “Component Types” based on the “local definitions” provided. Alternatively, the defined term could be changed to “Protection System Component” and used consistently. 3. In Table 1-3, the activity should include verifying that the current and voltage signal values are within tolerances, not just that signal values are present. The minimum activity should include a ratio check and/or burden check of current transformers. Suggest revising to state “Verify that current and/or voltage signal values provided to the protective relays are within the accuracy tolerance of the voltage and current sensing device”. 4. In the VSL for R2, we are assuming that the “4% within three years” is a 4% failure rate based on Attachment A, but that is unclear. We suggest clarifying this language

Organization	Yes or No	Question 4 Comment
		to match Attachment A language. 5. What is the basis for the 4% failure rate limit in Attachment A? It would appear that a 4% failure rate is high for protective relays. Does the SDT have a technical justification supporting the selection of 4% as the applicable limit? 6. In Attachment A, item 4 in the "maintain the technical justification" section needs clarification. It can be assumed that the phrase "for the greater of either the last 30 Components maintained or all Components maintained in the previous year" is referring to Components within a specific Segment, but more specific language may be needed. Also, are the references to "prior year" and "previous year" intended to refer to calendar years or 365 days preceding the analysis? 7. In Attachment A, item 5 in the "maintain the technical justification" section needs clarification. We suggest adding a timeframe for the "experience 4% or more Countable Events" phrase. Does this refer to any 12-month period? Additionally, the determination of a timeframe for "4% of the Segment population" is needed. Example- If there are 100 Components in a performance-based Segment in Year 1 and I add an additional 100 Components in Year 2, is the 4% based on 100 or 200?

Response: Thank you for your comments.

1. The SDT disagrees, and believes that having a shorter implementation plan would not allow entities to complete the requirements. The Implementation Plan is designed to allow an entity to systematically implement PRC-005-2 such that an ongoing program may be facilitated.
2. Strictly speaking, you are correct. However, the SDT has elected to include the emphasis, "Protection System" in these locations to help clarify that such components are only in-scope where they are part of the "Protection System."
3. The SDT disagrees. Verify is defined as, "Determining that the component is functioning correctly." If the signals to the relay are beyond tolerance, the component is not functioning correctly.
4. The SDT agrees and has corrected the Requirement R2 VSL to indicate "…no more than…"

Organization	Yes or No	Question 4 Comment
5. The SDT chose 4% because an entity with a small population (30 units) would have to adjust its time intervals between maintenance if more than one countable event was found to have occurred during the last analysis period. A smaller percentage would require that entity to adjust the time interval between maintenance activities if even one unit is found out of tolerance or causes a Misoperation (see Supplemental Reference and FAQ Section 9.1). 6. The SDT affirms that all references to "prior year"and "previous year" refer to "calendar year." 7. The time frame refers to a calendar year. The 4% failure rate is determined from those Component segments tested in the previous calendar year.		
TransAlta Centralia Generation LLC		1.3 Evidence Retention. The standard said: For Requirement R2, R3, R4 and R5, the Transmission Owner, Generator Owner and Distribution Provider shall each keep documentation of the two most recent performances of each distinct maintenance. How to count" the most recent performance ". Is this Standard going forward basis? For some of the protection system component, the maximum maintenance interval is 12 years (such as CT, PT or microprocessor relay) on the standard, how to count the two most recent performance?
Response: Thank you for your comments. For a Compliance Monitor to be assured of compliance, the SDT believes the Compliance Monitor will need the data of the most recent performance of the maintenance, as well as the data of the preceding maintenance to validate that entities have been in compliance since the last audit (or currently, since the beginning of mandatory compliance). The SDT has specified the data retention in the posted standard to establish this level of documentation, which is consistent with the current practices of several regional entities.		
PacifiCorp		1: The definition of "Protection System" in this version of PRC-005-2 includes "station dc supply associated with protective functions..." as a Protection System component. Page 83 of the FAQ document accompanying the draft standard provides further clarification that the batteries covered under PRC-005-2 are those that "supply the trip current to the trip coils of the interrupting devices that are a part of the Protection System." This statement in the FAQ is much more limiting than the definition of Protection System and may create confusion concerning registered entities' compliance obligations. For example, a registered entity may have one

Organization	Yes or No	Question 4 Comment
		battery / charger system in a station that supplies DC voltage to communication equipment, including that utilized in transfer trip communication, while a separate battery (typically operating at a different DC voltage) is utilized for relay / trip coil operation. In this case, it is unclear whether the battery / charger system utilized for transfer trip communication is subject to the requirements of the standard. PacifiCorp recommends that NERC or the SDT reconcile this apparent inconsistency in the FAQ document. 2: In Tables 1-4(a) thru 1-4(d), the maximum maintenance interval of four calendar months includes inspection "for unintentional grounds." PacifiCorp seeks clarification on whether this maintenance activity is intended to target the detection of unintentional grounds on the battery bank / rack itself, or a ground located anywhere on the entire DC wiring system. 3: The Violation Severity Level ("VSL") for R5 - which ranges from a failure to correct 5 or less ("Lower" VSL) to greater than 15 ("Severe" VSL) Unresolved Maintenance Issues - fails to adequately account for the cumulative amount of equipment a registered entity is required to maintain pursuant to PRC-005-2. A better alternative approach may be to base the VSL on the cumulative percentage of Unresolved Maintenance Issues that an entity fails to address and correct. Such an approach would be more consistent with the VSLs for R3 and R4, which are based on a percentage of the total scheduled maintenance. This approach more fairly and reasonably addresses the covered maintenance activities relative to the approach in the VSLs for R5, which are based on a strict count and therefore independent of the cumulative amount of maintenance activities performed by a registered entity. PacifiCorp recommends that the SDT develop an alternative method for determining VSLs for R5 that reflects the scope of an entity's maintenance activities and the resulting Unresolved Maintenance Issues managed by an entity.

Response: Thank you for your comments.

1. The SDT believes the term "Station dc supply" is clearly defined within the standard, and that the definition should be

Organization	Yes or No	Question 4 Comment
considered when applying the term. Your reference to Page 83 of the Supplemental Reference and FAQ Document clarifies that Table 1-4 of the standard refers to Station Batteries only, and not Communications Site Batteries. 2. The SDT believes the inspection for unintentional grounds applies to the entire DC wiring system. 3. The SDT disagrees and believes the VSL's for Unresolved Maintenance Issues should be a numeric quantity, and not a percentage.		
Essential Power, LLC		1. This DRAFT Standard is written as a prescriptive 'procedure' and not as a 'Standard'. The SDT should revise the Standard to address the goal, or intent, rather prescribing how entities should meet the Standard. 2. Inclusion of non-BES elements within the Standard falls outside of NERC's jurisdiction, as defined in the EPA 2005. The SDT should remove these elements from the Standard. 3. The inclusion of dc circuitry for equipment that is itself not covered under the Standard is not logical and does not contribute to reliability. The SDT should remove this from the Standard.
Response: Thank you for your comments. 1. The SDT believes the standard describes the desired outcomes and is not a 'prescriptive procedure'. The entity is free to determine what maintenance methods are best suited for its program. 2. FPA Section 215(a) Definitions section defines "bulk-power system as … facilities and control systems necessary for operating an interconnected electric energy transmission network (or any portion thereof)." That definition then is limited by a later statement which adds the term bulk-power system "does not include facilities used in the local distribution of electric energy." Facilities such as those to which you refer are not solely "used in the local distribution of electric energy," despite their location on local distribution networks. Further, if these facilities were not covered by the reliability standards, reliability gaps would exist.		

Organization	Yes or No	Question 4 Comment
3. The SDT believes that Protection Systems that trip (or can trip) for Faults on the BES should be included. This position is consistent with the SAR for Project 2007-17, and with the position of FERC staff.		
MRO NSRF		1. Article 4.2.1 - The NSRF believes that this article should be revised to say "Protection Systems installed for the purpose of protecting BES Elements only and detecting Faults on BES Elements. Protection Systems designed to protect non-BES elements that incidentally open 100 kV and greater breakers are excluded from the scope of PRC-005-2". This makes it very clear what is included in the scope of the Testing and Maintenance program and what is not. 2. Change the text of "Standard PRC-005-2 - Protection System Maintenance" Table 1-5 on page 21, Row 1, Column 3 to:"Verify that a trip coil is able to operate the circuit breaker, interrupting device, or mitigating device." Or alternately, "Electrically operate each interrupting device every 6 years "Trip coils are designed to be energized no longer than the breaker opening time (3-5 cycles). They are robust devices that will successfully operate the breaker for 5,000-10,000 electrical operations. The most likely source of trip coil failure is the breaker operating mechanism binding, thereby preventing the breaker auxiliary stack from opening and keeping the trip coil energized for too long of a time period. Therefore, trip coil failure is a function of the breaker mechanism failure. Exercising the breakers and circuit switchers is an excellent practice. Exercising the interrupting devices would help eliminate mechanism binding, reducing the chance that the trip coils are energized too long. The language as currently written in Table 1-5 row 1, will also have the unintentional effect of changing an entities existing interrupting device maintenance interval (essentially driving interrupting device testing to a less than 6 year cycle).The NSRF believes that as written the testing of "each" trip coil will result in the increased amount of time that the BES is in a less reliable system configuration. The NSRF hopes that the

Organization	Yes or No	Question 4 Comment
		SDT will consider these changes. 3. The NSRF recommends the statement "Excluding distributed UFLS and distributed UVLS (see Table 3)" be added to the top of Table 1-4(f). 4. Table 3. There will be many DP's that have distributed UFLS (or UVLS) solely on the distribution system (less than 100 kV). The only item these DP's will have to verify under Table 3 "Protection System dc supply" is the Protection System dc supply voltage. Yet, the definition of Protection System, as it relates to dc supply is "Station dc supply associated with protective functions (including batteries, battery chargers, and non-battery-based dc supply)". Our interpretation of Table 3 and Section 15.7 of the Supplementary Reference & FAQ document is that a DP need only check the dc supply voltage at the terminals of the relays. If that is the SDT interpretation as well, we recommend revising Table 3 of the standard to reflect that. Table 3 contains issues that need to be addressed in a similar fashion as discussed for non-UFLS and non-UVLS systems, i.e. Table 1-1. Comparison to independent sources is only one way to check for a reliable AC measuring device. It also appears that monitoring capabilities are not being given any credit in regards to the AC sensing devices, DC supply, or control circuitry themselves. There should be no difference in the way these systems are treated compared to BES Protection Systems. 5. In Section D Compliance, Article 1.3, paragraph 4 the standard requires documentation be kept for the ". . . two most recent performances of each distinct maintenance activity. . .". This needs to clarify that it cannot go back before 06/18/07, as evidenced by the suspension of CAN-0008. Also with some of the testing intervals being 12 years that would dictate a Registered Entity maintain 24 years of records, which is unreasonable. This article should be revised to have documentation for the most current testing interval, if after

Organization	Yes or No	Question 4 Comment
		06/18/07. 6. It is understood that lockout relay testing is important as unexercised lockouts can stick and cause regional outages as experienced at Westwing. However, lockout testing by itself is risky and can lead to local outages. If Registered Entities are required to take on the additional risk of testing lockout relays, dispensation must be granted for outages caused by those tests. The following statement should be included in the standard "No enforcement actions or penalties will result from outages caused by relay testing unless a Registered Entity shows a history of 3 or more test related outages per year for 5 years." 7. In the VSL for Table 4 it seems that the phrase "5% or less" should be "not more than 5%". With the original language it seems like an entity could be found to have an R4 lower VSL violation for "failure" of zero meaning they had done no testing. This VSL is written in the negative and should be rewritten in the positive. 8. The drafting team needs to clarify "maintenance summaries" as stated in Measure M3. This is an ambiguous term that could be interpreted differently amongst entities. If a term such as 'summary' is to be utilized within the standard, a clear definition of what the term is, what it pertains to, where it is located, etc. needs to be included. The NSRF recommends that "maintenance summaries" be defined and included in the "Definition of Terms used in Standard" section. 9. Footnote 1 in the Table sections would be much improved by inserting an example similar to what was provided in Section 8.4 of the Supplemental Reference and FAQ document 10. Additional methods of verification should be allowed for AC measurement monitoring other than simply performing comparison to an independent source. For example, a sudden rate of change in calculated relay MW analog value and/or

Organization	Yes or No	Question 4 Comment
		3Io calculation would give way towards a bad CT and/or path. Loss of potential logic is available in most microprocessor relays today, which is very reliable logic for determining PT/CCVT issues. Consideration should be given to utilities that are capable of performing this type of monitoring in order to allow them to reach that next level of attributes. 11. Please clarify why input/output verification is excluded from the highest level of monitoring related to communications systems (Table 1-2). The way the monitoring attribute is listed does not provide that these will operate when needed. Recommend language be added similar to the monitoring of inputs and outputs described in the relay section (Table 1-1). Table 1-3 should take into account the same concepts mentioned above in regards to AC measurement verification in Table 1-1. There are alternative ways to verify these quantities while still ensuring reliable operation. As such, companies should be given the opportunity to implement them. Additionally, credit should be given to circuit monitoring and alarming in AC circuits with electromechanical relays. If a transducer/alarming relay is placed in the circuit and monitoring is alarmed appropriately, the health of the AC sensing device can be determined. This would essentially provide the same level assurance as mentioned with the microprocessor relays. 12. Clarification is needed on the last row of Table 1-5. Does integrity entail monitoring and alarming of every individual path, if necessary, or is overall integrity sufficient? This statement is once again open to interpretation and leaves the entity at the mercy of the auditor.

Response: Thank you for your comments.

1. The SDT believes that the Applicability, as stated in PRC-005-2, is correct and supports the reliability of the BES. Please see Section 2.3 of the Supplementary Reference and FAQ document for additional discussion.

Organization	Yes or No	Question 4 Comment
		2. The SDT sees no appreciable change or improvement in the standard with your proposed change, and respectfully declines to modify the draft. 3. The SDT believes that the suggested change would be redundant to the current text of the Table 1-4(f) header. 4. This is an intentional difference between distributed UFLS/UVLS and the remainder of the Protection Systems addressed within the standard because of the distributed nature of distributed UFLS/UVLS and because these devices are usually tripping distribution System Elements. If an entity were to install monitoring equipment for verification of Station DC supply voltage, or other facets of the reduced maintenance activities regarding distributed UFLS/UFLS, Table 1-3 describes the adjusted activities permitted relative to that monitoring. 5. The SDT believes the Implementation Plan is descriptive in that an entity will be 100% compliant with PRC-005-2 when one maintenance period has elapsed. On a continuing basis, in order that a Compliance Monitor can be assured of compliance, the SDT believes that the Compliance Monitor will need the data of the most recent performance of the maintenance, as well as the data of the preceding one to validate that entities have been in compliance since the last audit. The SDT has specified the data retention in the posted standard to establish this level of documentation, which is consistent with the current practices of several regional entities. 6. The SDT believes it is left to the entity to determine how to align the requirements of the standard with requirements of other regulations and with operational concerns. 7. The VSL Guidelines, developed in accordance with the FERC VSL Order establish the Lower VSL for stepped VSLs as “5% or less,” the Medium VSL as “more than 5% but less than (or equal to) 10%,” the High VSL as “more than 10% up to (and including) 15%,” and the Severe VSL as “more than 15%.” 8. The SDT believes defining “Maintenance Summaries” is unnecessary. The measure simply lists some types of evidence to demonstrate that an entity has maintained its Protection System in accordance with the standard. 9. The SDT believes that the footnote is adequate, but recognizes that some entities may desire the additional details that are included in Section 8.4 of the Supplementary Reference and FAQ document. 10. The SDT believes that the methods that you suggest would be useful for meeting the 12-calendar-year interval for unmonitored Components. However, for monitored systems with no physical maintenance activities, the SDT is concerned about the quality of some of the methods suggested.

Organization	Yes or No	Question 4 Comment
11. The SDT has modified the last row of Table 1-2 to be similar to the corresponding row of Table 1-1. 12. Section 15.3 of the Supplemental Reference and FAQ provides the following guidance: "Monitoring of integrity means to monitor for continuity and/or presence of voltage on each trip path."		
Duke Energy		1. Duke Energy votes "Negative" because we strongly object to the wording in the Applicability section 4.2.1. We believe that the wording change to PRC-005-2 draft 4 after the Successive Ballot but prior to the Recirculation Ballot expanded the reach of the standard to relaying schemes that detect faults on the BES but are not intended to provide protection for the BES. FERC's September 26, 2011 Order in Docket No. RD11-5 approved NERC's interpretation of PRC-005-1 R1 and R2, stating: "The interpretation clarifies that the Requirements are "applicable to any Protection System that is installed for the purpose of detecting faults on transmission elements (lines, buses, transformers, etc.) identified as being included in the [BES] and trips an interrupting device that interrupts current supplied directly from the BES." This interpretation is consistent with the Commission's understanding that a "transmission Protection System" is installed for the purpose of detecting and isolating faults affecting the reliability of the bulk electric system through the use of current interrupting devices." The SDT's response to our comment directed us to Section 2.3 of the Supplementary Reference and FAQ document which states "There should be no ambiguity: if the element is a BES element then the Protection System protecting that element should be included within this Standard." We agree with that statement, but question why the SDT insists on changing Section 4.2.1 to include devices that detect Faults on the BES but which do not provide protection for the BES? Duke Energy's standard protection scheme for dispersed generation at retail stations would become subject to the standard due to the changes in section 4.2.1. These protection schemes are designed to detect faults on the BES, but do not operate

Organization	Yes or No	Question 4 Comment
		BES elements nor do they interrupt network current flow from the BES. In the most recent draft, the relays, current transformers, potential transformers, trip paths, auxiliary relays, batteries, and communication equipment associated with the dispersed generation protection scheme would be subject to the requirements in PRC-005-2. Previous drafts of the standard would not have required Duke Energy to maintain the protection system components associated with dispersed generation schemes at retail stations in accordance to the requirements in PRC-005-2. The new wording in section 4.2.1 would add significant O&M costs and resource constraints due to the inclusion of protection system devices at retail stations without increasing the reliability of the BES. Duke Energy does not believe it was the intent of the standard to include elements that did not have an impact on the reliability of the BES. Duke Energy would prefer the following definition: Protection Systems that are installed for the purpose of protecting BES Elements (lines, buses, transformers, etc.)". 2. We also note that the Lower VSLs for R3 and R4 include violations for "5% or less," and R5 for "5 or less" which mandates perfection. We believe that the consequence of a very small number of components having a missed or late maintenance activity is insignificant to BES reliability." We suggest that a range of 0.5% to 5% would be more reasonable.

Response: Thank you for your comments.

1. The SDT believes that the Applicability, as stated in PRC-005-2, is correct and supports the reliability of the BES. The SDT observes that the approved Interpretation addresses the term "transmission Protection System," and notes that this term is not used within PRC-005-2; thus, the interpretation does not apply to PRC-005-2. PRC-005-2 specifically addresses "Protection Systems that are installed for the purpose of detecting Faults on BES Elements." Please see Section 2.3 of the Supplementary Reference and FAQ document for additional discussion.
2. NERC criteria for VSLs do not currently permit them to allow some level of non-performance without being in violation. Much

Organization	Yes or No	Question 4 Comment
of this comment appears to be related to the technical content of the standard, not on the VRFs or VSLs.		
PPL Supply NERC Registered Organizations		Although we have provided some suggested changes in these comments, PPL Generation entities voted in favor of this version. We thank the SDT for the effort on this project and believe that the SDT has developed a revision that improves on many aspects of the existing version of PRC-005.
Response: The SDT thanks you for your affirmative vote.		
ExxonMobil Research and Engineering		As written, the current draft of PRC-005-2 discriminates against smaller entities that do not have a population size of 60 for each component type. Historical records provide an accurate account of how specific components have performed in their installed environment. For a set population size, increasing the number of historical data points should improve the accuracy of an entity's calculated mean time between failures, so, if you increase the period over which the historical data must be evaluated, you can compensate for a smaller segment population size. The SDT's current draft prevents smaller entities from using a larger historical data set to make up for a smaller population size when developing a performance based protective system maintenance and testing program. The SDT should reconsider allowing smaller entities to use historical records that extend for period longer than a single year in the development of a performance based program.
Response: Thank you for your comment. Small entities are permitted to aggregate their components with similar components of other entities to meet the component populations, as long as the programs are (and remain) similar – See Section 9 of the Supplementary Reference and FAQ document and the associated footnote to Attachment A. Decreasing the Component population below the requirements of Attachment A will result in an unsound program due to Component populations that are not statistically significant. The Supplementary Reference and FAQ document states, "Any population segment must be comprised of at least 60 individual units; if any asset owner opts for PBM but does not own 60 units to comprise a population then that asset owner may combine data from other asset owners until the needed 60 units is aggregated." Historical data may be good for trending, but may not be suitable for judging current maintenance program effectiveness.		
American Transmission Company, LLC		ATC recommends that the SDT change the text of "Standard PRC-005-2 - Protection System Maintenance" Table 1-5 on page 21, Row 1, Column 3 to:"Verify that a trip coil

Organization	Yes or No	Question 4 Comment
		is able to operate the circuit breaker, interrupting device, or mitigating device." Or alternately, "Electrically operate each interrupting device every 6 years "Basis for the change: Trip coils are designed to be energized no longer than the breaker opening time (3-5 cycles). They are robust devices that will successfully operate the breaker for 5,000-10,000 electrical operations. The most likely source of trip coil failure is the breaker operating mechanism binding, thereby preventing the breaker auxiliary stack from opening and keeping the trip coil energized for too long of a time period. Therefore, trip coil failure is a function of the breaker mechanism failure. Exercising the breakers and circuit switchers is an excellent practice. ATC would encourage language that would suggest this task be done every 2 years, not to exceed 3 years. Exercising the interrupting devices would help eliminate mechanism binding, reducing the chance that the trip coils are energized too long. The language, as currently written in Table 1-5 row 1, will also have the unintentional effect of changing an entities existing interrupting device maintenance interval (essentially driving interrupting device testing to a less than 6 year cycle).ATC continues to recommend a negative ballot since we believe that the testing of "each" trip coil will result in the increased amount of time the BES is in a less intact system configuration. ATC hopes that the SDT will consider these changes.
Response: Thank you for your comment. The SDT sees no appreciable change or improvement in the standard with your proposed change, and respectfully declines to modify the draft.		
Bonneville Power Administration		BPA believes that PRC-005-2 achieves the goal of reducing redundancy and overlap within the PRC standards by consolidating four existing standards into one. BPA's comments are focused on improving the clarity and audit-ability of the proposed standard. 1. Regarding Section D1.3 "Evidence Retention", BPA suggests that the entire first paragraph be removed because for all the instances that follow the first paragraph there is a requirement to keep evidence obtained since the last audit. Therefore, there are no instances where the evidence retention period is shorter

Organization	Yes or No	Question 4 Comment
		than the time since the last audit, and the first paragraph is not necessary. Furthermore, the first paragraph introduces the idea of "other evidence" for which there is no explanation. It is unclear what could be used for evidence other than the items described in the 2. Measures. The idea of "other evidence" should not be introduced without an explanation of what that evidence might be, so this is another reason for removing the first paragraph. 3. Regarding requirements R2 and R4, BPA believes that these two requirements should be combined into a single requirement with two parts. Since both of these requirements deal with performance-based maintenance, it would simplify the standard and improve the flow if they were to be combined. 4. Regarding Table 1-4(f), it is unclear if all of the conditions on the left side need to be met before any of the reduced maintenance activities on the right side are allowed, or if there is a one-on-one relationship between an item on the left and the adjacent item on the right. BPA suggests that the table be reconfigured to clarify the relationship between the conditions on the left and the activities on the right.

Response: Thank you for your comments and support.

1. The SDT has been advised to include this paragraph as the first paragraph in the evidence retention.
2. The list of possible evidence with the measures is not intended to provide a comprehensive list of all type of evidence that may be useful. The entity is provided the flexibility to use other evidence that they deem relevant.
3. Requirements R2 and R4 are separate, as they address two specific requirements; one to establish a performance-based PSMP according to criteria, and the other to implement that PSMP.
4. There is a one-to-one correspondence between the right and left columns, and the SDT believes that further clarification is unnecessary.

Organization	Yes or No	Question 4 Comment
CenterPoint Energy		1. CenterPoint Energy recommends retaining an option to utilize technology for monitoring trip coil continuity as an alternative to the maintenance activity in Table 1-5. The Table 1-5 requirement to "Verify that each trip coil is able to operate the circuit breaker, interrupting device, or mitigating devices (regardless of any monitoring of the control circuitry)" appears to address breaker maintenance, instead of Protection System Controls. In the Supplementary Reference and FAQ, monitoring is described as greatly reducing the time between a component failure and discovery of that failure. 2. For the “Control circuitry between the UFLS or UVLS relays and electromechanical lockout and/or tripping auxiliary devices (Excludes non-BES trip coils)”, the Table 3 requirement is to “Verify the path from the relay to the lockout and/or tripping auxiliary relay (including essential supervisory logic)” every 12 calendar years. CenterPoint Energy recommends this requirement be revised to “No periodic maintenance specified”. CenterPoint Energy believes this to be a commissioning task, not a preventive maintenance task. A preventive maintenance task, such as the above, is unnecessary for distributed UFLS and UVLS system components. The overriding performance, or “risk-based”, NERC Reliability Standards for UFLS are PRC-006 and PRC-007 where an entity is required to shed their obligated firm load amount. 3. For the “Unmonitored control circuitry associated with protective functions inclusive of all auxiliary relays”, the Table 1-5 requirement is to “Verify all paths of the trip circuits inclusive of all auxiliary relays through the trip coil(s) of the circuit breakers or other interrupting devices” every 12 calendar years. CenterPoint Energy recommends this requirement be revised to “No periodic maintenance specified”. CenterPoint Energy believes that verifying all tripping paths is a commissioning task, not a preventive maintenance task. Alternatively,

Organization	Yes or No	Question 4 Comment
		CenterPoint Energy recommends specifically excluding panel wiring and requiring only cabling between panels and interrupting devices be verified. Requiring trip path verification to include panel wiring complicates maintenance while focusing on a component that is not subject to age-related degradation in addition to, historically, not being a source of protection system failures. This type of testing can negatively impact BES system reliability with the outages that are required and by exposing the electric system to incorrect tripping.
Response: Thank you for your comments. 1. While trip coil monitors may demonstrate continuity, they do not fully demonstrate operability. 2. The SDT disagrees regarding UFLS and UFLS-related control circuitry maintenance, and believes that the maintenance specified is appropriate. 3. The SDT disagrees with your proposal regarding Table 1-5 for dc control circuits and auxiliary relays which may be a critical part of a tripping scheme.		
Central Lincoln		Central Lincoln appreciates the good work the SDT has done. We believe this particular team has actually listened to our comments and made changes where needed. Thanks.
Response: The SDT thanks you for your affirmative vote.		
Constellation/Exelon		Constellation/Exelon thanks the drafting team for the hard work on the PRC-005 standard. The standard language made significant progress; however, below are outstanding issues of concern: Table 1-3 1. Table 1-3 should not include current transformers (CTs). The tests mandated by this draft seeks to measure that a signal is “provided to the protective relay” however, for CT’s this test merely confirms that a signal is sent, not that it reached the correct protective relay.

Organization	Yes or No	Question 4 Comment
		2. The maintenance activity in Table 1-3 for PTs and CTs as they relate to electro mechanical relays should be left to the discretion of the Generator Owner. In order to meet the required activity specified in PRC-005-2 draft 2 Table 1-3, the generating unit would be required to take readings with meters while the unit is operating. This practice introduces a risk of tripping the unit inadvertently. The risk of tripping the unit while performing this maintenance activity is contrary to the intended purpose of PRC-005 and introduces a potentially adverse affect on the reliability of the BES. Such testing is not recommended by suppliers. Battery Testing 3. The Tables describing battery testing could be consolidated into less granular breakdown and thus alleviate some of the associated compliance burden and avoid potential confusion. 4. Further to battery testing, given the quantity of batteries and the shorter interval cycles, the four calendar month requirement for batteries is too rigid as a firm four months. Similar to how a definition of annual can have a boundary such as within 9 to 16 months; battery testing intervals should allow a boundary such as "three times per year and not more than 6 months between each and average intervals not exceeding four months." 5. Please confirm that references throughout Standard to battery/batteries relate to the entire battery bank and not to the individual battery cells unless specifically mentioned. Similarly, battery charger maintenance activity should relate to the battery charger in its entirety and not to individual parts or components. Auto Synchronizing Systems and Relays 6. The drafting team should clarify in the language that testing of auto synchronizing

Organization	Yes or No	Question 4 Comment
		systems and relays is excluded. Applicability 7. To make 4.2.5.4 under Facilities more clear, please remove the term “generator-connected”. 8. When the SDT changed the original PRC-005 applicability language from “...affecting the reliability of the BES...” to the new 4.2.1 language “...that are installed for the purpose of detecting faults on BES elements (lines, buses, transformers, etc.)”, they opted to exclude the second half of this sentence taken from the PRC-005-1a Interpretation, which read “...and trips an interrupting device that interrupts current supplied directly from the BES.” By doing so, the SDT failed to recognize that some Protection Systems can be responsive to faults on the BES, but still have no effect on the reliability of the BES. The change in 4.2.1 may unintentionally expand the scope of PRC-005.Depending on how Section 4.2.1 is interpreted, it could create a perverse incentive to disable, or not apply, reverse directional protection on the secondary (at voltages less than 100kV) of radially connected load-serving transformers. Such relaying typically uses available units in a multifunction device, and while not critically necessary for fault clearing, it is applied because it adds a benefit at no incremental cost with minimal security risk, and it will not interrupt a BES element if it operates insecurely. It also improves reliability to connected distribution load, in the event a BES transmission line faults during abnormal switching, by coordinating with non-directional overcurrent relays that would otherwise interrupt the entire load. Furthermore such directional relaying would only operate after the faulted BES line is already removed from any connection at BES voltages via its high voltage (>100kV) circuit breakers. Viewed in an expansive way, the proposed 4.2.1

Organization	Yes or No	Question 4 Comment
		language could bring into scope these relays as well as tripping circuits of distribution voltage circuit breakers that are normally operated in a radial configuration. It would be reasonable for a TO to disable this relaying, rather than accept these consequences. In the previous comment period (Sept 2011), industry raised similar concerns and to most of the commenters, the SDT responded with the following statement:"The SDT believes that the Applicability as stated in PRC-005-2 is correct and that it supports the reliability of the BES. The SDT observes that the approved Interpretation addresses the term, "transmission Protection System", and notes that this term is not used within PRC-005-2; thus the interpretation does not apply to PRC-005-2. PRC-005-2 specifically addresses "Protection Systems that are installed for the purpose of detecting faults on BES Elements." Please see Section 2.3 of the Supplementary Reference and FAQ document for additional discussion." Unfortunately, this response fails to address the concerns raised above. Entergy previously suggested the following language for 4.2.1:"Protection Systems that are installed for the purpose of detecting faults on BES Elements (lines, buses, transformers, etc.) and trips an interrupting device that interrupts current supplied directly from the BES Elements."This language is appropriate and addresses industry concerns. We ask that the SDT adopt this language as Section 4.2.1. Evidence Retention 9. It is not necessary and is undesirable to reiterate the language from the NERC Rules of Procedure (Appendix 4C 3.1.4.2) in the standard. Stating such language in two places is redundant and future changes to this section of the Rules of Procedure language will create compliance conflict. While this language may be recommended for inclusion as new boilerplate-type language for NERC standards

Organization	Yes or No	Question 4 Comment
		and may be used in other recently revised standards, the potential conflict should be taken into account and avoided for PRC-005. The first paragraph in section 1.3 should be removed. 10. Further, the standard language should dictate data retention relevant to the standard activities and not merely default to the time period in between audits. The Rules of Procedure language enables CEAs to confirm compliance for the full audit period, but the Standard retention language allow for a more reasoned obligation for evidence retention. Specific to this standard, two or three years of evidence for certain components, such as battery tests, is sufficient to demonstrate an entity's PSMP program. On a positive note, standardizing the requested evidence information is helpful.

Response: Thank you for your comments.

1. Regarding current transformers, the SDT disagrees, and notes that the table specifies that the entity verify that the signal is provided to the relay.
2. Regarding testing for currents or potentials behind a Generator Operator's electromechanical relay panel, the SDT believes that it is possible during a 12-year interval to find a reasonably low-risk opportunity to perform the required test. Please refer to Section 15.2.1 of the Supplementary Reference and FAQ document for a discussion of this topic.
3. The existing battery tables have evolved such that entities may easily locate the specific table that applies to the technology being used in order to improve clarity and avoid confusion.
4. Regarding battery testing, the SDT believes that sufficient industry expertise supports a four-month interval requirement.
5. The SDT confirms that most of the battery requirements apply to the entire battery bank, and not necessarily to each battery jar or cell; the same is true for battery chargers. Those requirements specific to individual cells are clearly indicated.
6. Automatic synchronizing relays (which generally close circuit breakers, rather than trip them) are not covered by the Applicability.
7. The generator-connected station service transformers are often connected to the generator bus directly without an interposing breaker; thus, the Protection Systems on these transformers will trip the generator, as stated in Applicability 4.2.5.1.
8. The SDT believes that the Applicability, as stated in PRC-005-2, is correct and supports the reliability of the BES. The SDT observes

Organization	Yes or No	Question 4 Comment
that the approved Interpretation addresses the term, "transmission Protection System," and notes that this term is not used within PRC-005-2; thus, the interpretation does not apply to PRC-005-2. PRC-005-2 specifically addresses "Protection Systems that are installed for the purpose of detecting Faults on BES Elements." Please see Section 2.3 of the Supplementary Reference Document for additional discussion. 9. The SDT has been advised to include this paragraph as the first paragraph in the Evidence Retention section. 10. For the Compliance Monitoring Authority to be confident that the corrective action is being implemented, the entity should expect to demonstrate progress toward correcting the Unresolved Maintenance Issue, such as the evidence suggested in Measure M5 (with additional suggested evidence added). The SDT has specified the data retention in the posted standard to establish this level of documentation, which is consistent with the current practices of several regional entities.		
DTE Energy		1. DECo does not agree with the 6 year interval for the majority of the Protection System components. There are not sufficient problems found on routine maintenance based on a 10 year interval that would justify that significant of a reduction in the maintenance interval. 2. Also, with respect the station batteries specifically, station batteries, DECo recommends the elimination of the 4 month inspection as annual inspections have been sufficient for early diagnosis of potential issues. Advanced monitoring is not practical at this time as it does not appear that the technology required to forgo the 4 month inspection is readily available.
Response: Thank you for your comments. 1. The SDT believes the intervals and activities specified are technically effective, in a fashion that may be consistently monitored for compliance. It is left to the entity to determine how to align these requirements with requirements of other regulations and with operational concerns. If the relevant components are monitored, more lengthy intervals may be utilized. Performance-based maintenance is an option to increase the intervals, if the performance of these devices supports those intervals. 2. Regarding battery testing, the SDT believes that sufficient industry expertise supports a four-month interval requirement.		
FirstEnergy		FE asks that the team clarify the intent of certain aspects of the applicability section:

Organization	Yes or No	Question 4 Comment
		1. Sec. 4.2.5.4 - For transformers supplying unit auxiliaries, protective functions that provide for transferring of auxiliaries without tripping the generating unit should not be included. Also, we believe that the term "station service transformer" is being used inaccurately. As currently written, the section includes all the protection systems for station service transformers for generators that are a part of the BES. It states, “Protection Systems for generator-connected station service transformers for generators that are part of the BES.” Generating facilities may have transfer schemes on the auxiliary transformer to transfer equipment to a reserve transformer instead of tripping the unit. These protection systems should not be included in the Facilities for PRC-005-2, since the BES is not affected. But since a station service transformer, by definition (IEEE Std. 505), is "a transformer that supplies power from a station high voltage bus to the station auxiliaries and also to the unit auxiliaries during unit startup or shutdown or when the unit auxiliaries transformer is not available, or both." [Ed. note: a.k.a. Start-Up Transformer or Cranker], the terminology "generator-connected station service transformer" is confusing and easily subject to misinterpretation. 2. Also, there needs to be consistency of use of terms between the standard and its Supplementary Reference document. On pages 32 and 33 of the FAQ, the following questions and their respective answers should be consistent with use of terms and replace “station service” with “auxiliary” as follows: FAQ Question - Please provide a sample list of devices or systems that must be verified in a generator, generator step-up transformer, and generator connected auxiliary transformer to meet the requirements of this Maintenance Standard.FAQ Question - In the case where a plant does not have a generator connected auxiliary transformer such that it is normally fed from a system connected

Organization	Yes or No	Question 4 Comment
		auxiliary transformer, is it still the drafting team's intent to exclude the protection systems for these system connected auxiliary transformers from scope even when the loss of the normal (system connected) auxiliary transformer will result in a trip of a BES generating facility? Therefore, for consistency between the reference FAQ document and the standard, we suggest that "station service" be replaced with "auxiliary" in 4.2.5.4 and read as follows: "Protection Systems for generator-connected auxiliary transformers used on generators which are part of the BES, that act to trip the generator either directly or via lockout or tripping auxiliary relays."
Response: Thank you for your comments. 1. Applicability Section 4.2.5.4 specifically addresses the Protection Systems that act to trip the generator, and the "station service transformer" term seems to be the most consistently-used term for this application. 2. The SDT modified the Supplementary Reference and FAQ document for consistency with the standard.		
Kansas City Power & Light		1. For clarity, change the text of "Standard PRC-005-2 - Protection System Maintenance" Table 1-5 on page 21, Row 1, Column 3 to: "Verify that each a trip coil is able to operate the circuit breaker, interrupting device, or mitigating device.". Or alternately, "Electrically operate each interrupting device every 6 years". 2. Countable Event as proposed is somewhat unclear. Recommend the following language: Countable Event - A Component which has failed and requires repair or replacement, any condition discovered during the maintenance activities in Tables 1-1 through 1-5 and Table 3 which requires corrective action, or a Misoperation attributed to hardware failure or calibration failure. Misoperations due to any other reason are not included in Countable Events.

Organization	Yes or No	Question 4 Comment
Response: Thank you for your comments. 1. The SDT believes it is important that each individual trip coil be verified. 2. The SDT does not believe that the changes you suggest improve the standard.		
BAE Batteries USA		Major comments have been addressed in Question 3.
Manitoba Hydro		Manitoba Hydro is voting negative for the following reasons: 1 - Battery inspection and verification interval - Manitoba Hydro maintains that the battery inspection interval should be extended to 6 months. The 4 month interval is too frequent based on our experience and while IEEE std 450 (which seems to be the basis for table 1-4) does recommend intervals, it also states that users should evaluate these recommendations against their own operating experience. Manitoba Hydro has more than ten years of experience using its existing battery inspection intervals and Manitoba Hydro's reliability data has proven that the 6 month inspection interval is suitable for Manitoba Hydro. Manitoba Hydro's battery maintenance tasks were derived from a reliability study of Manitoba Hydro stationary batteries, and the tasks and intervals are suitable given Manitoba Hydro's installed plant, design criteria, climate, and reliability performance. A more frequent inspection interval might be more suitable to specific utilities with material differences in climate, design, installed apparatus, and performance, but it is not suitable for Manitoba Hydro and may be more than is required for many other utilities. To use a more frequent inspection interval would penalize Manitoba Hydro which has been diligently performing battery inspections for many years, with no resulting increase in reliability. It would also potentially adversely affect reliability by diverting resources away from projects that are critical to reliability to meet this maintenance interval. In addition, the 4 month time period proposed for basic battery verification and inspection interval is not aligned with the more detailed 18 month battery verification and inspection interval which will result in additional and unnecessary site visits and maintenance activities. As well, Manitoba Hydro does not feel that the SDT has provided sufficient technical basis to support a 4 month battery inspection and verification interval and requests

Organization	Yes or No	Question 4 Comment
		that further justification and external reference be provided. 2 - PBM not permitted for batteries - Manitoba Hydro disagrees with the SDT's basis for not permitting the use of PBM for batteries. The reasons provided by the SDT for disallowing them are that batteries are perishable and involve chemical reactions. However, it is our understanding that many other industries rely on performance based maintenance programs when dealing with similar equipment. We would appreciate an external reference or source which supports the claim that equipment with these characteristics cannot have a performance based maintenance system applied to them. 3 - Phased Implementation Plan - Manitoba Hydro maintains its position that prescribing how an entity must reach full compliance with PRC-005-2 will provide a negligible improvement in reliability while significantly increasing the compliance burden. PRC-005-2 affects a large number of assets and proving compliance for the prescribed percentages of assets during the transition period creates unnecessary overhead with no added value. We suggest that the requirement to demonstrate the percentage of assets currently under PRC-005-1 vs. PRC-005-2 be removed, that entities should be given a single compliance date for each of the maintenance intervals and be allowed the flexibility to schedule and complete their maintenance as required while transitioning to the defined time intervals in PRC-005-2, and that NERC measures progress on reaching PRC-005-2 intervals using means other than Compliance measures such as industry surveys. 4 - Data Retention Requirements - The data retention requirements are too uncertain for two reasons. First, the requirement to "provide other evidence" if the evidence retention period specified is shorter than the time since the last audit introduces uncertainty because a responsible entity has no means of knowing if or when an audit may occur of the relevant standard. Secondly, it is unclear what 'other evidence', besides the specified evidence in the Measures, an entity may be asked to provide to demonstrate it was compliant for the full time period since their last audit.

Organization	Yes or No	Question 4 Comment
Response: The SDT thanks you for your comments. 1. The SDT believes that sufficient industry expertise supports a four-month interval. 2. The SDT believes that batteries cannot be a unique population segment of a Performance-based Maintenance (PBM) Program because there are too many variables in the electrochemical process to completely isolate all of the performance-changing criteria necessary for using PBM on battery systems. 3. The SDT disagrees with your proposal for a phased implementation plan. 4. The SDT has been advised to include this paragraph as the first paragraph in the evidence retention section.		
Alber Corporation		My comment is in regard to the proposed maintenance tasks associated with ohmic testing and capacity testing of lead-acid batteries affected by PRC-005-2.The option is given to the battery use to perform either inter cell/unit ohmic tests OR battery capacity tests whichever suits the user. The two tests, while related, are not directly interchangeable with one another. Ohmic tests are intended to be used as a tool during battery maintenance inspections to determine the general state of health (condition) of the battery as a whole. Capacity tests are intended to demonstrate the actual capacity of a battery. Ohmic tests cannot be substituted for capacity tests. Alber has pioneered the development of portable and fixed internal resistance test equipment for stationary lead-acid batteries since 1972. Through years of research, testing in real-world applications and development, Alber has conclusively determined that there is a direct relationship between internal cell resistance and capacity. However, because this correlation is not linear, ohmic measurements should not be used to calculate capacity or remaining life. Ohmic measurements should be used as a supplement to capacity testing and not as a replacement. These measurements are very valuable in identifying developing problems between the capacity testing intervals and for determining whether a battery string is going to perform its intended mission. IEEE 1188-2005 for VRLA batteries agrees with this and recommends measurement of this parameter once every three months. While not specifically recommended in IEEE 450-2010 for vented lead-acid batteries, ohmic measurements can provide early warning of potential failure and should be performed at least

Organization	Yes or No	Question 4 Comment
		annually. Again, if readings result in doubt that a battery will perform as intended, follow up capacity testing is recommended. A battery discharge test completely simulates the operating environment and therefore conclusively proves that a battery can perform during an emergency. The results of these tests will help set the priority for capacity testing as the user becomes more familiar with their batteries and may assist in extending capacity test intervals. The intention of the proposed NECR PRC-005-2 standard as it relates to the DC supply, and, in particular, the station battery is to increase reliability of the bulk electric system (BES) in north America. In its current draft form, PRC-005-2 proposes the utility may perform internal ohmic measurements or perform capacity, but both tests are not required. It would appear therefore; that the Standards Drafting Team (SDT) has made the assumption that test results obtained from measuring cell internal ohmic values is the same as performing a capacity test. It is not, and to provide the option to perform one test or the other runs counter to industry recommended practices. Such maintenance practices will, in effect, ultimately reduce the reliability of the BES rather than improve it. Periodic capacity testing on a 5 year interval for VLA batteries, and a 2 year interval for VRLA batteries is consistent with IEEE 450-2010 and IEEE 1188-2005 recommended practices respectively. It should be part of a complete maintenance program designed to maximize the DC supply's availability when needed. Respectfully submitted, Richard Tressler Alber Corp.
Response: Thank you for your comment. The SDT agrees with your statement, and those of others, concerning the true capacity of the station battery and relating it to internal ohmic measurements. Tables 1-4a, 1-4b and 1-4c have been modified for clarity, and the Supplemental Reference and FAQ Document has been modified to further elaborate on these concerns.		
NIPSCO		Per NIPSCO Tech Service Dept : There is a need for NERC to provide a format for maintenance reports. Also, it would help if specific test requirements for relays were provided.
Response: Thank you for your comments. The SDT do not believe it is necessary or appropriate to prescribe a specific format for test results or test requirements.		
PNM Resources		PNM Resources appreciate the outstanding work of the SDT! We offer two comments

Organization	Yes or No	Question 4 Comment
		for consideration by the SDT. 1) We believe that the 6 Calendar Month battery cell/unit internal ohmic value measurement for VRLA Batteries may be more frequent than we believe is necessary to maintain reliability. PNM has witnessed no significant failure patterns with VRLA batteries in our system and we currently do impedance testing of all Transmission Station Batteries on a 2-year basis. 2) We also believe that system constraints could arise that will make it difficult to "verify all paths of the trip circuits inclusive of all auxiliary relays through the trip coil(s) of the circuit breakers or other interrupting devices" as specified in Table 1-5 for "unmonitored control circuitry associated with protective functions inclusive of all auxiliary relays". Thank you for your consideration.
Response: Thank you for your comments. 1. The SDT believes that it is necessary to verify that the station battery can perform as manufactured by evaluating the cell/unit parameters to station battery baseline if a performance or modified performance test is not conducted. Please see Section 15.4 of the Supplementary Reference and FAQ Document for a discussion of this topic. 2. The SDT believes the intervals and activities specified are technically effective, in a fashion that may be consistently monitored for compliance. It is left to the entity to determine how to align these requirements with requirements of other regulations and with operational concerns.		
American Electric Power		PRC-005-2 is intended to supersede the existing standard PRC-017-0 "Special Protection System Maintenance and Testing". As it is currently written, an Entity with a Special Protection System will be required by R1 to select either a time-based, performance-based or combination maintenance method for the Entity's SPS. Since Special Protection Systems are not frequently installed, it is unlikely that an Entity will be able to meet the requirement of R2 and Attachment A that the Segment population contain 60 components for all components of the SPS. This will require the Entity to utilize the time-based maintenance method for at least some

Organization	Yes or No	Question 4 Comment
		components in the SPS. Under the time-based maintenance method and R3, the Entity will be required to utilize the minimum maintenance activities and maximum maintenance intervals prescribed within Tables 1-1 through 1-5, Table 2, and Table 3. Special Protection Systems by their nature may physically include components that are not listed in the NERC definition of Protection System and therefore are not included in the tables of PRC-005-2. The standard, as currently drafted, does not clearly provide a means for an Entity with a Special Protection System to establish minimum maintenance activities and maximum maintenance intervals for components that have been declared by their Region as part of a Special Protection System but that are not included in the NERC definition of Protection System.
Response: The SDT thanks you for your comments. The SDT does not perceive the gap in maintenance requirements that you describe for SPSs.		
US Bureau of Reclamation		1. Re Terms defined for use only within PRC-005-2: The standard provides definitions which will not be incorporated into the Glossary of Terms. This would allow the definitions as used in this standard to conflict with the definition used in other standards if this practice becomes more widespread and would reduce the cohesiveness of the standard set. 2. Re The definition of Components: The standard defined what constitutes a control circuit as a component type with "Control circuitry associated with protective functions through the trip coil(s) of the circuit breakers or other interrupting devices." The standard then modified the definition by allowing "a control circuit Component is dependent upon how an entity performs and tracks the testing of the control circuitry." The definition should not be dependent upon practice. This makes the definition a fill in the blank definition. Either eliminate the allowance or remove the definition of control circuit.
Response: The SDT thanks you for your comments.		

Organization	Yes or No	Question 4 Comment
1. The standard specifies that the terms used are intended for this standard only; therefore, there should no conflict with their use in any other PRC standard. 2. The intent of the different means of identifying control circuitry was to accommodate various entities' philosophies on testing these circuits. Regardless of how an entity chooses to identify their control circuitry, the entity must meet the requirements of the standard regarding maintenance of control circuitry.		
ReliabilityFirst		1. ReliabilityFirst votes in the negative for this standard primarily due to the language in Requirement R5. The language in Requirement R5 is subjective and non-measurable in its present state. ReliabilityFirst offers the following comments for consideration. 2. Definition of "Component" a. The language stating "discrete piece of equipment" within the first sentence is unclear and open ended. ReliabilityFirst suggests the following modified language for the first sentence in the definition of "Component": "A Component is a piece of equipment that is one of the five specific element included in a Protection System, including but not limited to a protective relay or current sensing device." 3. Definition of "Unresolved Maintenance Issue" a. There may be instances when a deficiency is identified and corrected during the maintenance itself. For further clarity and to address this circumstance, ReliabilityFirst recommends the following modification for consideration: "A deficiency identified during a maintenance activity that could not be corrected and causes the component to not meet the intended performance and requires follow-up corrective action." 4. Facilities Section 4.2.1 a. This is too limited or selective in only including Protection Systems that are installed on BES Elements to strictly detect Faults. There are a number of relays

Organization	Yes or No	Question 4 Comment
		that are installed to detect non-Fault but abnormal conditions such as power swings/out of step and overvoltage that should not be excluded from a maintenance program. ReliabilityFirst recommends the following language for consideration: "Protection Systems that are installed for the purpose of protecting BES Elements (lines, buses, transformers, etc.)" 5. Facilitates Section 4.2.2 a. It is unclear what requirements the phrase "installed per ERO underfrequency load-shedding requirements." is referring to. Is it NERC UFLS Requirements, Regional UFLS Requirements, etc.? To be consistent with section 4.2.3, ReliabilityFirst recommends the following for consideration: "Protection Systems used for underfrequency load-shedding systems installed to arrest declining frequency, for BES reliability. 6. Requirement R3 a. For time-based maintenance program(s), there is no safeguard if more than 4% Countable Events are experienced during a maintenance interval. ReliabilityFirst recommends adding an new Subpart 3.1 (similar to the language for performance-based in Attachment A): "3.1 If the Components in a Protection System Segment maintained through a time-based PSMP experience 4% or more Countable Events, develop, document, and implement a Corrective Action Plan to reduce the Countable Events to less than 4% of the Segment population within 3 years." 7. Requirement R5 a. Requirement R5 has language which states "...shall demonstrate efforts to correct...". ReliabilityFirst believes this language is subjective and non-measurable. It will be difficult in determining what amount of demonstration an entity will need to provide in order to be compliant. There is also no timeframe in which the correction needs to be completed (is it 30 days or 30 years?). ReliabilityFirst believes measurable language such as "shall correct" or "shall

Organization	Yes or No	Question 4 Comment
		have and implement a Corrective Action Plan" should be incorporated within the requirement. 8. Table 1-2 a. For "Any communications system with continuous monitoring or periodic automated testing for the presence of the channel function, and alarming for loss of function" ReliabilityFirst believes the maintenance interval is too short. Carrier communication failures are a major cause of Misoperations. Many have automatic checkback and are monitored but continue to fail during Fault conditions. ReliabilityFirst recommends a maintenance interval of 6 years. b. For "Any communications system with continuous monitoring or periodic automated testing for the performance of the channel using criteria pertinent to the communications technology applied" ReliabilityFirst believes a maintenance interval should be required. ReliabilityFirst recommends a maintenance interval of 12 years. 9. Table 1-3 a. For "Any voltage and current sensing devices not having monitoring attributes of the category below." ReliabilityFirst recommends a maintenance interval of 6 years. b. For "Voltage and Current Sensing devices connected to microprocessor relays with AC measurements are continuously verified by comparison of sensing input value..." ReliabilityFirst believes the concept of never having to do any testing just because you have continuous monitoring is fundamentally flawed in this table as well as 1-5 and 2. Continuous monitoring and measurement comparison cannot test everything, such as loss of ground, multiple grounds and turn-to-turn failures, and monitoring itself can fail. ReliabilityFirst recommends a maintenance interval of 12 years. 10. Table 1-5 a. ReliabilityFirst recommends adding "auxiliary tripping devices" to

Organization	Yes or No	Question 4 Comment
		Electromechanical lockout devices in row 2 of Table 1-5. If lockout relays are maintained every six years auxiliary tripping devices should be as well. ReliabilityFirst recommends the following language for considerations: "Electromechanical lockout devices and auxiliary tripping devices which are directly in a trip path from the protective relay to the interrupting device trip coil (regardless of any monitoring of the control circuitry)."

Response: The SDT thanks you for your comments.

1. Requirement R5 is expressly focused on allowing entities to resolve deficiencies in an effective manner, rather than performing "band-aid" fixes. Management of completion of the identified unresolved maintenance issue is a complex topic that falls outside the scope of this standard. There can be any number of supply, process and management problems that make setting repair deadlines impossible. The SDT specifically chose the phrase "demonstrate efforts to correct" (with guidance from NERC Staff) because of the recognition that more complex unresolved maintenance issues could require more time to resolve effectively than there is time remaining in the maintenance interval, yet the problems must eventually be resolved. The SDT believes that corrective actions should be timely, but concludes it would be impossible to postulate all possible remediation projects; and, therefore, impossible to specify bounding time frames for resolution of all possible unresolved maintenance issues or what documentation might be sufficient to provide proof that effective corrective action is being undertaken. The definition of "Unresolved Maintenance Issue" has been modified to add a clarifying phrase that the deficiency "cannot be corrected during the maintenance interval."
2. The SDT believes it important to distinguish between component "types" (of which there are 5) and individual components (of which there are numerous examples), and believes that you are confusing the two concepts.
3. The definition of "Unresolved Maintenance Issue" has been modified to add a clarifying phrase that the deficiency "cannot be corrected during the maintenance interval."
4. The SDT believes your proposed language for Applicability Section 4.2.1 is overly broad and could lead to unintentional application of PRC-005-2 to other as-of-yet unidentified systems.
5. The SDT intends that this refers to either NERC UFLS requirements or regional UFLS requirements.
6. Countable Events apply only to entities that utilize a performance-based PSMP (Requirements R2 and R4). For entities that use a time-based program, the establishment of maximum intervals within the standard relieves the entity from having to have any

Organization	Yes or No	Question 4 Comment
		basis, etc., that the intervals used are appropriate, as long as those intervals conform to the tables. 7. Management of completion of the identified Unresolved Maintenance Issue is a complex topic that falls outside of the scope of this standard. There can be any number of supply, process and management problems that make setting repair deadlines impossible. The SDT specifically chose the phrase "demonstrate efforts to correct" (with guidance from NERC Staff) because of the concern that many more complex unresolved maintenance issues might require greater than the remaining maintenance interval to resolve (and yet still be a "closed-end process"). For example, a problem might be identified on a VRLA battery during a six-month check. In instances such as one that requires battery replacement as part of the long-term resolution, it is highly unlikely that the battery could be replaced in time to meet the six-calendar-month requirement for this maintenance activity. The SDT does believe corrective actions should be timely, but concludes it would be impossible to postulate all possible remediation projects; and, therefore, impossible to specify bounding time frames for resolution of all possible Unresolved Maintenance Issues, or what documentation might be sufficient to provide proof that effective corrective action is being undertaken. The definition of "Unresolved Maintenance Issue" has been modified to add a clarifying phrase that the deficiency "cannot be corrected during the maintenance interval." 8. a) The SDT believes that sufficient emphasis is placed on communication system checks and maintenance. The SDT also believes that more frequent hands-on testing will be no more effective in finding problems than the automated monitoring of these functions. b). The SDT believes that continuous monitoring requirements, as already drafted, will drastically reduce risk to the BES. 9. a) The intervals and activities specified are believed by the SDT to be technically effective, in a fashion that may be consistently monitored for compliance. Entities are empowered to develop PSMPs that exceed these requirements, if they determine such a PSMP to be necessary. b). The SDT believes that continuous monitoring is equivalent to actually conducting the maintenance activities otherwise specified at a far more frequent interval than would be possible with physical hands-on maintenance; and, therefore, improves reliability. The SDT has also identified throughout the tables specific activities that they believe to not be effectively conducted via monitoring. 10. The SDT believes the intervals and activities specified for auxiliary relays are technically effective, and believes sufficient emphasis is placed on auxiliary tripping relay maintenance.
ATCO Electric Ltd		1. Table 1-4(a) Vented Lead-Acid (VLA) Batteries: ATCO Electric has a number of

Organization	Yes or No	Question 4 Comment
		remote substations that are difficult to access frequently. The requirement for a 4 calendar month inspection for electrolyte level is too frequent. (i) Does alarm/monitor technology exist for electrolyte level in battery design today? For in-service battery systems, if battery alarm/monitor technology exists, a capital project is required to retrofit each battery system and this kind of retrofit work could be detrimental to both the battery design life as well as the battery reliability. (ii) The electrolyte level requirement would become achievable if electrolyte level inspection was moved to the 18 calendar months category, or if the 4 calendar months frequency was increased to 8 calendar months. 2. Table 1-4(b) Valve Regulated Lead Acid (VRLA) Batteries: ATCO Electric has a number of remote substations that are difficult to access frequently. The requirement of a 6 calendar month inspection of individual battery cell/unit internal ohmic values is too frequent. The requirement would become achievable if battery cell/unit internal ohmic value inspections were moved to the 18 calendar months category. 3. Table 1-5 Control Circuitry When a breaker is opened, there is no indication on which trip coil is actually operated. How do market participants demonstrate compliance for "verify that each trip coil is able to operate..."? The verification of trip coil health is done during breaker maintenance with various maintenance durations that maybe longer than 6 years depending on breaker types. 4. The requirement of "verify electrical operation of electromechanical lockout

Organization	Yes or No	Question 4 Comment
		devices" introduces high risk of human error outages to the BES system and diminishes the reliability gain from performing this activity. The drafting team should consider lockout relay failure rates, onerous tasks of blocking each trip contacts in many BES elements' tripping circuits, imposed risk, required resources in the overall reliability benefit gained by performing the lockout relay maintenance.
Response: The SDT thanks you for your comments. 1. Devices to monitor electrolyte levels are available. The SDT believes that the four-month interval for checking electrolyte level (absent monitoring) is appropriate, as low electrolyte level may impair the ability of the battery to function properly. 2. The SDT believes that the six-month interval for evaluation of cell/unit ohmic parameters to baseline is appropriate, as degradation of these parameters may impair the ability of the battery to function properly. 3. Breaker control circuitry is typically designed with facilities, such that individual trip coils can be isolated for observation. Also, it may be possible to distinguish operation of individual trip coils by determining what devices initiate those trip coils. 4. The SDT believes that electromechanical lockout relays need periodic operation. As such, these devices are required to be exercised at the same six- year interval required for electromechanical relays. The SDT recognizes the risk of human error trips when working with testing of lockout devices, but believes these risks can be managed. Performance-based maintenance is an option if you want to extend your intervals beyond six years.		
Florida Municipal Power Agency		The applicability of the standard should be modified to reflect the FERC approved interpretation PRC-005-1b Appendix 1 that basically says that applicable Protection Systems are those that protect a BES Element AND trip a BES Element. The interpretation states: The applicability as currently stated will sweep in distribution protection: “4.2.1 Protection Systems that are installed for the purpose of detecting Faults on BES Elements (lines, buses, transformers, etc.)”Many (most) network distribution systems that have more than one source into a distribution network will have reverse power relays to detect faults on the BES and trip the step-down transformer to prevent feedback from the distribution to the fault on the BES. This is not a BES reliability issue, but more of a safety issue and distribution voltage issue.

Organization	Yes or No	Question 4 Comment
		These relays would be subject to the standard as the applicability is currently written, but, should not be and they are currently not within the scope of PRC-005-1b Appendix 1 because the step-down transformer (non-BES) is tripped and not a BES Element (hence, the "and" condition of the interpretation is not met). There are many other related examples of distribution that might be networked or have distributed generation on a distribution circuit where such reverse power relays, or overcurrent relays with low pick-ups, are used for safety and distribution voltage control reasons and are not there for BES Reliability. To make matters worse, for these Reverse Power relays, it is pretty much impossible to meet PRC-023 because the intent of the relay is to make current flow unidirectional (e.g., only towards the distribution system) without regard for the rating of the elements feeding the distribution network. So, if these relays are swept in, and if they are on elements > 200 kV, then the entity would not be able to meet PRC-023 as that standard is currently written. So, the SDT should adopt the FERC approved interpretation.
Response: Thank you for your comments. The SDT believes that the Applicability, as stated in PRC-005-2, is correct and supports the reliability of the BES. The SDT observes that the approved Interpretation addresses the term, “transmission Protection System,” and notes that this term is not used within PRC-005-2; thus, the interpretation does not apply to PRC-005-2. PRC-005-2 specifically addresses “Protection Systems that are installed for the purpose of detecting Faults on BES Elements.” Please see Section 2.3 of the Supplementary Reference and FAQ Document for additional discussion. Reverse power relays and low-set overcurrent relays, as discussed in your comment, are not installed for detecting Faults on BES elements. The SDT does not understand your concerns regarding PRC-023, but we suggest you provide those concerns to the team working on that standard.		
Ingleside Cogeneration LP		The derivation of the implementation plan apparently incorporates the “requirements” of NERC’s Compliance organization, which has released several CANs on the topic. This is exactly backwards, and has led to at least one CAN which has been withdrawn due to legal overreach. However, the plan as written is very complex. We believe that diagrams of acceptable time frames should be included in the implementation plan so that industry stakeholders can better assess the impact

Organization	Yes or No	Question 4 Comment
		on their maintenance operations.
Response: The SDT thanks you for your comments. The SDT has developed the Implementation Plan such that it is clear, both to entities and to Compliance Enforcement Authorities, as to when the various requirements must be fully implemented. The Implementation Plan has been crafted to allow entities to systematically implement the standard in a manner that facilitates effective ongoing performance of a PSMP. The SDT does not believe it necessary to "diagram" the PSMP.		
EPRI		The drafting time should see the opinion of the IEEE Stationary Battery Committee before this standard is rolled out for implementation.
Response: The SDT thanks you for your comments. Several members of the NERC Task Force of the IEEE Stationary Battery Committee participated in developing modifications to the sections of Table 1-4 to be more effective and technically accurate.		
ACES Power Marketing Standards Collaborators		1. The first part of definition of a Countable Event should be modified as follows: "The failure of a Component such that it requires repair or replacement...". As it is currently worded, it is technically counting the Component as the Countable Event and not the failure of the component. Considering that the other two items that are Countable Events are conditions and misoperations, it seems appropriate to make failure the Countable Event. 2. Application of this standard to UFLS is problematic as worded in Section 4.2.2. The UFLS are only applicable if "installed per ERO underfrequency load-shedding requirements". Technically, no UFLS fits this description because there are no ERO requirements to have a UFLS. PRC-006-0 was never approved by the Commission and is not enforceable. The Commission considered it a "fill-in-the-blank" standard. While PRC-006-1 corrects the "fill-in-the-blank" issues and was approved by the NERC BOT November 4, 2010, the Commission has yet to act on it. 3. The data retention requirement for the Protection System Maintenance Program documentation seems excessive. The Data Retention section states that all versions since the last compliance audit must be maintained. Since TOs, GOs,

Organization	Yes or No	Question 4 Comment
		and DPs are all on six year audit cycles, this would require maintaining this documentation for six years. Is this really necessary? The length could become even greater once NERC implements registered entity assessments that could shorten or lengthen the periods between compliance audits. The data retention requirements for Requirements R2, R3, R4, and R5 are not consistent with NERC Rules of Procedure. Section 3.1.4.2 of Appendix 4C - Compliance Monitoring and Enforcement Program states that the compliance audit will cover the period from the day after the last compliance audit to the end date of the current compliance audit. The data retention requirements compel the registered entity to retain documentation for the longer of "the two most recent performances of each distinct maintenance activity for Protection System Components, or all performances of each distinct maintenance activity for the Protection System Component since the previous scheduled audit date". While it may have been intended to apply to both clauses, the "since the previous scheduled audit date" only applies to the second clause. Since some of the maintenance activities have intervals of 12 years, this would require the registered entity to retain documentation for 24 years which cannot be audited since it is outside the audit window per the Rules of Procedures. At a minimum, we suggest clarifying that the documentation must not be maintained past the day after the last audit completion date. In the fourth paragraph of the Data Retention section, Component is not used consistently. It is used in both singular and plural form. It seems like it should be one or the other. 4. Requirement R1 VSLs: For the High VSL, "entities'" should be "entity's" to be consistent with the other VSLs. 5. It is not clear why missing three component types jumps to a Severe VSL. Missing two is a Moderate VSL. Missing three should be a High VSL.

Organization	Yes or No	Question 4 Comment
Response: Thank you for your comments. 1. The SDT agrees with your comments on Countable Event, and has modified the definition of Countable Event to: "A failure of a Component requiring …" 2. Applicability Clause 4.2.2 applies to whatever ERO-required UFLS that may exist, either today or in the future. NERC Reliability Standard PRC-006-1 has now been approved by FERC. 3. The SDT believes that all versions of the entity's PSMP should be retained for audit purposes. For a Compliance Monitor to be assured of compliance, the SDT believes the Compliance Monitor will need the data of the most recent performance of the maintenance, as well as the data of the preceding maintenance to validate that entities have been in compliance since the last audit (or currently, since the beginning of mandatory compliance). The SDT specified the data retention in the posted standard to establish this level of documentation, which is consistent with the current practices of several regional entities. 4. The SDT corrected the Requirement R1- High VSL, as you suggested. 5. The SDT believes that missing three components is a "significant percentage," and is in accordance with the VSL Guidelines.		
Independent Electricity System Operator		The IESO continues to disagree with the VRF assigned to the new R3 and R4. R3 and R4 ask for implementing the maintenance plan (and initiate corrective measures) whose development and content requirements (R1 and R2) themselves have a Medium VRF. Failure to develop a maintenance program with the attributes specified in R1, and stipulation of the maintenance intervals or performance criteria as required in R2, will render R3/R4 not executable. Hence, we reiterate our position that the VRF for R3 be changed to Medium.
Response: Thank you for your comments. The SDT disagrees, and believes the failure to implement a PSMP should be assigned a VRF of High.		
BAE Batteries USA		The NERC Standard should incorporate suggestions made in a letter provided to the NERC Drafting Team along w/ a specific Task Force Report commissioned by the IEEE Stationary Battery Committee.
Response: The SDT thanks you for your comments. Several members of the NERC Task Force of the IEEE Stationary Battery		

Organization	Yes or No	Question 4 Comment
Committee participated in developing modifications to the sections of Table 1-4 to be more effective and technically accurate.		
Nebraska Public Power District		The SDT believes that it is possible to manage the risks that you describe and that performance of these trip path verifications will be an overall benefit to the reliability of the BES 1. Please provide the basis for the requirement of functional trip checks? 2. Are there recorded instances that an "event" would have been avoided if functional trip checks had been performed? 3. Suggest for monitored microprocessor relays in Table 1-1 and 3 to verify "settings are as specified that are essential to the proper functioning of the protection system". Many settings are not essential. 4. A key concern is will the reliability of the bulk electric system be affected negatively due to increased risk from human element initiated events as a result of the more frequent functional trip checks that will be required. All functional tests should be moved to the minimum frequency of 12 years to minimize this unknown but present risk.
Response: The SDT thanks you for your comments. 1. Please see Section 15.3 of the Supplementary Reference and FAQ document. 2. While the SDT cannot comment on any specific events that would have been avoided explicitly by performing functional trip checks, there is no doubt that the number of Misoperations will be reduced if more comprehensive maintenance is performed. It is also likely that mal-performance of control circuitry has been a factor in a number of disturbances. 3. In many microprocessor relays, various settings impact other settings, making it difficult to explicitly determine which are essential to proper functioning of the Protection System. Additionally, the SDT anticipates that this activity, for microprocessor relays, may very well be easily performed by downloading the settings from the relay and comparing them to the file of desired settings. 4. The maintenance of the overall control circuitry is already specified for a 12-year interval. Only trip coil verification and lockout		

Organization	Yes or No	Question 4 Comment
relay verification are specified for six years.		
Southwest Power Pool Standards Development Team		Under section 1.3 Evidence Retention we feel like documentation of the last two performances of each distinct maintenance activity should be limited to the last one. This is due to the amount of documentation being recorded as well as for certain a component there is a 12 year maximum interval. Would you have to store this information for 24 years? This could also violate the NERC ruling that was just made on a CAN 008 that stated you do not have to show intervals earlier than June 18th 2007. Suggested alternate language "For Requirement R2, Requirement R3, Requirement R4, and Requirement R5, the Transmission Owner, Generator Owner, and Distribution Provider shall each keep documentation of the most recent performance of each distinct maintenance activity for the Protection System Components, or all performances of each distinct maintenance activity for the Protection System Component since the previous audit date, whichever is longer, but not prior to June 18th 2007."
Response: The SDT thanks you for your comments. For a Compliance Monitor to be assured of compliance, the SDT believes the Compliance Monitor will need the data of the most recent performance of the maintenance, as well as the data of the preceding maintenance to validate that entities have been in compliance since the last audit (or currently, since the beginning of mandatory compliance). The SDT specified the data retention in the posted standard to establish this level of documentation, which is consistent with the current practices of several regional entities.		
NextEra Energy, Inc.		1. Verifying electrolyte levels of vented lead acid (VLA) batteries every four (4) calendar months is excessive and will not promote the reliability of the bulk electric system (BES). The maximum maintenance interval should be twelve (12) calendar months. Today's lead-calcium and lead-selenium-low antimony batteries do not experience rapid water loss as compared to the legacy lead-antimony batteries and if battery cells should crack from positive plate growth, twelve (12) calendar months is more than adequate to detect electrolyte leakage before cell failure.

Organization	Yes or No	Question 4 Comment
		2. Verifying that unmonitored communication systems are functional every four (4) calendar months is excessive and will not promote the reliability of the BES. The maximum maintenance interval should be twelve (12) calendar months. Based on our operating experience, twelve (12) calendar months is sufficient to detect communication failures without affecting the reliability of the BES.
Response: The SDT thanks you for your comments. 1. The SDT believes that the four-month interval for checking electrolyte level (absent monitoring) is appropriate, as low electrolyte level may impair the ability of the battery to function properly. 2. The SDT believes that the four-month interval is proper for unmonitored communications systems. The activity related to this interval is to verify basic operating status.		
Flathead Electric Cooperative, Inc.		1. We appreciate the work of the drafting team to fulfill the SAR objectives. Flathead generally does not like some of the new definitions proposed by the revised standard, especially R5, “Unresolved Maintenance Issues” is too vague and will be left up to individual auditors to determine compliance. 2. In addition, it appears the drafting team is creating new definitions for plain English in the definition of Protection System Maintenance Program (PSMP). Surely "test, monitor, inspect, calibrate" don't need NERC definitions. Let's leave the definition as "An ongoing program by which Protection System components are kept in working order and proper operation of malfunctioning components is restored." Suggest deleting "A maintenance program for a specific component includes one or more of the following activities: o Verify- Determine that the component is functioning correctly. o Monitor - Observe the routine in-service operation of the component. o Test - Apply signals to a component to observe functional performance or output behavior, or to diagnose problems. o Inspect - Detect visible signs of component failure, reduced performance and degradation.

Organization	Yes or No	Question 4 Comment
		o Calibrate-Adjust the operating threshold or measurement accuracy of a measuring element to meet the intended performance requirement." 3. In addition, it appears the component and component type definitions alter the meaning of the NERC approved definition of a protection system. I would suggest the drafting team not try to redefine the NERC-approved definition of Protection system. 4. "Countable Event" definition seems to conflict with standards related to Misoperation of protection system.

Response: The SDT thanks you for your comments.

1. Management of completion of the identified unresolved maintenance issue is a complex topic that falls outside of the scope of this standard. There can be any number of supply, process and management problems that make setting repair deadlines impossible. The SDT specifically chose the phrase “demonstrate efforts to correct” (with guidance from NERC Staff) because of the concern that many more complex unresolved maintenance issues might require greater than the remaining maintenance interval to resolve (and yet still be a “closed-end process”). For example, a problem might be identified on a VRLA battery during a six-month check. In instances, such as one that requires battery replacement as part of the long term resolution, it is highly unlikely that the battery could be replaced in time to meet the six-calendar-month requirement for this maintenance activity. The SDT does believe corrective actions should be timely, but concludes it would be impossible to postulate all possible remediation projects and therefore, impossible to specify bounding time frames for resolution of all possible unresolved maintenance issues or what documentation might be sufficient to provide proof that effective corrective action is being undertaken. The definition of “Unresolved Maintenance Issue” has been modified to add a clarifying phrase that the deficiency “cannot be corrected during the maintenance interval.” The SDT believes the definition is sufficiently clear, while also allowing some flexibility for both TOs and auditors.
2. The SDT believes that the descriptions within the PSMP definition are necessary so that the definition will be clearly understood and so that entities consistently apply those terms as they implement the activities within the tables.
3. The definitions, for use within this standard, do not alter the approved definition of “Protection System,” but instead provide consistent terms for use within the standard.

Organization	Yes or No	Question 4 Comment
4. The definition, within this standard, of Countable Event has no relationship to the approved definition of Misoperation. It is used solely to describe and evaluate Protection System performance for the purpose of developing and perpetuating a performance-based PSMP.		
Entergy Services		1. We recommend the word "Protection" be deleted from the definition of Component to make the defined term Component be a generic term. If that word is not deleted then we recommend the term used in the standard "Protection System Component" be changed to "Component" since as defined a Component is a Protection System piece of equipment. Component - A Component is any individual discrete piece of equipment included in a System, including but not limited to a protective relay or current sensing device. 2. The designation of what constitutes a control circuit Component is dependent upon how an entity performs and tracks the testing of the control circuitry. Some entities test their control circuits on a breaker basis whereas others test their circuitry on a local zone of protection basis. Thus, entities are allowed
Response: The SDT thanks you for your comments. 1. The SDT intends that the term not be generic, and that term explicitly apply within this standard. 2. The intent of the different means of identifying control circuitry was to accommodate various entities' philosophies on testing these circuits. Regardless of how an entity chooses to identify their control circuitry, the entity must meet the requirements of the standard regarding maintenance of control circuitry.		
PNGC Comment Group		We thank the SDT for their hard work and will be voting "yes" on this project. However, we have 5 specific comments independent of the questions above and we've listed them in order of priority: 1. The PNGC Comment Group takes issue with the associated VSLs for R3. For a small entity using a time based maintenance program, even one missed interval could be enough to elevate them to a high VSL despite the limited impact on the Bulk Electric

Organization	Yes or No	Question 4 Comment
		System. Consider an entity with 9 total components within a specific Protection System Component Type. One violation would mean an 11% violation rate, enough to catapult them into a High VSL. Given the "NERC Guidance (Below), this seems to be a contradiction given the language of "...more than one". a. NERC Guidance on VSL assignment: i. LOWER: Missing a minor element (or a small percentage) of the required performance ii. Moderate: Missing at least one significant element (or a moderate percentage) of the required performance. iii. High: Missing more than one significant element (or is missing a high percentage) of the required performance or is missing a single vital component. iv. Severe: Missing most or all of the significant elements (or a significant percentage) of the required performance. We suggest changing the language for "Lower VSL" for R3 to: For Responsible Entities with more than a total of 20 Components within a specific Protection System Component Type in Requirement R3, 5% or fewer have not been maintained... OrFor Responsible Entities with a total of 20 or fewer Components within a specific Protection System Component Type, 2 or fewer Components in Requirement R3 have not been maintained... 2. The PNGC comment group disagrees with the "Evidence Retention" requirements for the standard. In the current version for R2-R5, entities are required to: "...keep documentation of the two most recent performances of each distinct maintenance activity for the Protection System Components, or all performances of each distinct maintenance activity for the Protection System Component since the previous scheduled audit date, whichever is longer." The PNGC comment group believes that keeping documentation for one previous maintenance activity or since the last audit, whichever is longer, should be sufficient. Keeping the two most recent instances of an activity with a maximum maintenance interval of 12 years could mean planning for up to 35 years or so of evidence retention. With the longer of "since the last audit" or "at least one maintenance interval" as the minimum retention requirement the CEA should have sufficient basis to determine compliance. 3. The PNGC comment group believes R5, "Unresolved Maintenance Issues" is too

Organization	Yes or No	Question 4 Comment
		vague and will be left up to individual auditors to determine compliance. This requirement appears ripe for misapplication and future CANs on the topic. Good utility practice will ensure that maintenance issues are corrected as a primary function of our members is to provide the most reliable service possible. The SDT lists several possible examples of evidence in M5 but we believe that more specificity is needed for evidence requirements or the requirement should be removed. We understand the importance of "maintenance" of protection systems and that when maintenance issues cannot be immediately addressed there needs to be follow up. We believe notation of the maintenance issue during the inspection should be sufficient for compliance. By including the examples in the associated measure for the requirement, we believe the SDT has confused the issue. In our opinion M5 should indicate that evidence of notation of the issue is all that is required (meaning acknowledging of the issue on the inspection form). Further, in your response to entity comments during the last comment period on this topic, you stated, "The SDT believes that an effective PSMP must include correction of deficiencies...". This statement implies that the standard must cover the correction of deficiencies to completion. There could be very long time frames associated with maintenance including management budget decisions, equipment purchase lead times and personnel scheduling for follow up work. Some issues could potentially require years of tracking within this standard creating an unnecessary compliance risk for the entity. We believe the SDT has met the intent of order 693 if a maintenance activity is initiated. The completion of the initiated maintenance activity should be outside the bounds of the standard and the standard should clearly state this. 4. We also find issues with the "Definitions of Terms Used in Standard "Specifically, the definition of "Component" seems to confuse the subject unnecessarily. We suggest simplifying the definition by breaking out the control circuitry and voltage and current sensing device examples. That is a lot of material to cover in what should be a simple definition of "Component". 5. Also we believe the definitions of the 5 behaviors under the PSMP definition are

Organization	Yes or No	Question 4 Comment
		unnecessary. We believe that indicating that the PSMP involves some or all of the 5 activities without trying to define them is fine. For example, your definition of "Inspect" states: Detect visible signs of component failure, reduced performance and degradation. But what if you find no failure, reduced performance or degradation? Have you not inspected the component? Or what about "verify"? If you determine the component is not functioning correctly, have you not verified anything?

Response: The SDT thanks you for your comments.

1. A smaller entity will have less to maintain in accordance with the standard; and, thus, the percentages are still appropriate.
2. For a Compliance Monitor to be assured of compliance, the SDT believes the Compliance Monitor will need the data of the most recent performance of the maintenance, as well as the data of the preceding maintenance to validate that entities have been in compliance since the last audit (or currently, since the beginning of mandatory compliance). The SDT specified the data retention in the posted standard to establish this level of documentation, which is consistent with the current practices of several regional entities.
3. Management of completion of the identified unresolved maintenance issue is a complex topic that falls outside of the scope of this standard. There can be any number of supply, process and management problems that make setting repair deadlines impossible. The SDT specifically chose the phrase "demonstrate efforts to correct" (with guidance from NERC Staff) because of the concern that many more complex unresolved maintenance issues might require greater than the remaining maintenance interval to resolve (and yet still be a "closed-end process"). For example, a problem might be identified on a VRLA battery during a six-month check. In instances such as one that requires battery replacement as part of the long term resolution, it is highly unlikely that the battery could be replaced in time to meet the six-calendar-month requirement for this maintenance activity. The SDT does believe corrective actions should be timely, but concludes it would be impossible to postulate all possible remediation projects; and, therefore, impossible to specify bounding time frames for resolution of all possible unresolved maintenance issues or what documentation might be sufficient to provide proof that effective corrective action is being undertaken. The definition of "Unresolved Maintenance Issue" has been modified to add a clarifying phrase that the deficiency "cannot be corrected during the maintenance interval." The evidence listed in the Measure is intended to be illustrative of the types potentially effective evidence, but is not all-inclusive, as demonstrated by the term, "… not limited to…"
4. The definitions of terms that are specified for use only within this standard are intended to support consistent application of the

Organization	Yes or No	Question 4 Comment
standard. 5. The SDT believes that the descriptions within the PSMP definition are necessary so that the definition will be clearly understood and so that entities consistently apply those terms as they implement the activities within the tables. The term "inspect" was modified to "Examine for …" in consideration of your comment.		
Western Area Power Administration		Western Area Power Administration - Rocky Mountain Region does not agree with changing lockout devices to 6 year intervals for testing.
Response: The SDT thanks you for your comments. The interval for lockout relays has been at six years for several drafts; this is not a change. The SDT believes that electromechanical lockout relays need periodic operation, and that six years is the appropriate interval. Performance-based maintenance is an option, if you want to extend your intervals beyond six years.		

END OF REPORT

Standard Development Roadmap

This section is maintained by the drafting team during the development of the standard and will be removed when the standard becomes effective.

Development Steps Completed:

1. Standards Committee approved posting SAR and draft standard on August 11, 2011.
2. SAR and draft standard were posted for a 45-day concurrent posting and initial ballot from August 15, 2011 through September 29, 2011.
3. Standard passed the initial ballot with the following results: Quorum - 84.32% and Affirmative - 73.93%.

Description of Current Draft:
This is the second draft of the Standard. This standard merges previous standards PRC-005-1b, PRC-008-0, PRC-011-0, and PRC-017-0. It also addresses FERC comments from Order 693, and addresses observations from the NERC System Protection and Control Task Force, as presented in *NERC SPCTF Assessment of Standards: PRC-005-1 — Transmission and Generation Protection System Maintenance and Testing, PRC-008-0 — Underfrequency Load Shedding Equipment Maintenance Programs, PRC-011-0 — UVLS System Maintenance and Testing, PRC-017-0 — Special Protection System Maintenance and Testing.*

Future Development Plan:

Anticipated Actions	Anticipated Date
1. Post for combined 30-day comment and successive ballot.	May – June, 2012
2. Drafting Team Responds to Comments	July – August, 2012
3. Conduct recirculation ballot	August, 2012

Definitions of Terms Used in Standard

This section includes all newly defined or revised terms used in the proposed standard. Terms already defined in the Reliability Standards Glossary of Terms are not repeated here. New or revised definitions listed below become approved when the proposed standard is approved. When the standard becomes effective, these defined terms will be removed from the individual standard and added to the Glossary.

Protection System Maintenance Program (PSMP) — An ongoing program by which Protection System components are kept in working order and proper operation of malfunctioning components is restored. A maintenance program for a specific component includes one or more of the following activities:

- Verify — Determine that the component is functioning correctly.
- Monitor — Observe the routine in-service operation of the component.
- Test — Apply signals to a component to observe functional performance or output behavior, or to diagnose problems.
- Inspect — Examine for signs of component failure, reduced performance or degradation.
- Calibrate — Adjust the operating threshold or measurement accuracy of a measuring element to meet the intended performance requirement.

Protection System (NERC Board of Trustees Approved Definition)

- Protective relays which respond to electrical quantities,
- Communications systems necessary for correct operation of protective functions,
- Voltage and current sensing devices providing inputs to protective relays,
- Station dc supply associated with protective functions (including station batteries, battery chargers, and non-battery-based dc supply), and
- Control circuitry associated with protective functions through the trip coil(s) of the circuit breakers or other interrupting devices.

The following terms are defined for use only within PRC-005-2, and should remain with the standard upon approval rather than being moved to the Glossary of Terms.

Unresolved Maintenance Issue – A deficiency identified during a maintenance activity that causes the component to not meet the intended performance, cannot be corrected during the maintenance interval, and requires follow-up corrective action.

Segment – Protection Systems or components of a consistent design standard, or a particular model or type from a single manufacturer that typically share other common elements. Consistent performance is expected across the entire population of a Segment. A Segment must contain at least sixty (60) individual components.

Component Type - Any one of the five specific elements of the Protection System definition.

Component – A Component is any individual discrete piece of equipment included in a Protection System, including but not limited to a protective relay or current sensing device. The designation of what constitutes a control circuit Component is dependent upon how an entity performs and tracks the testing of the control circuitry. Some entities test their control circuits on a breaker basis whereas others test their circuitry on a local zone of protection basis. Thus, entities are allowed the latitude to designate their own definitions of control circuit Components. Another example of where the entity has some discretion

on determining what constitutes a single Component is the voltage and current sensing devices, where the entity may choose either to designate a full three-phase set of such devices or a single device as a single Component.

Countable Event – A failure of a Component requiring repair or replacement, any condition discovered during the maintenance activities in Tables 1-1 through 1-5 and Table 3 which requires corrective action or a Misoperation attributed to hardware failure or calibration failure. Misoperations due to product design errors, software errors, relay settings different from specified settings, Protection System Component configuration errors, or Protection System application errors are not included in Countable Events.

A. Introduction

1. Title: **Protection System Maintenance**

2. Number: PRC-005-2

3. Purpose: To document and implement programs for the maintenance of all Protection Systems affecting the reliability of the Bulk Electric System (BES) so that these Protection Systems are kept in working order.

4. Applicability:

4.1. Functional Entities:

4.1.1 Transmission Owner

4.1.2 Generator Owner

4.1.3 Distribution Provider

4.2. Facilities:

4.2.1 Protection Systems that are installed for the purpose of detecting Faults on BES Elements (lines, buses, transformers, etc.)

4.2.2 Protection Systems used for underfrequency load-shedding systems installed per ERO underfrequency load-shedding requirements.

4.2.3 Protection Systems used for undervoltage load-shedding systems installed to prevent system voltage collapse or voltage instability for BES reliability.

4.2.4 Protection Systems installed as a Special Protection System (SPS) for BES reliability.

4.2.5 Protection Systems for generator Facilities that are part of the BES, including:

4.2.5.1 Protection Systems that act to trip the generator either directly or via lockout or auxiliary tripping relays.

4.2.5.2 Protection Systems for generator step-up transformers for generators that are part of the BES.

4.2.5.3 Protection Systems for transformers connecting aggregated generation, where the aggregated generation is part of the BES (e.g., transformers connecting facilities such as wind-farms to the BES).

4.2.5.4 Protection Systems for station service or excitation transformers connected to the generator bus of generators which are part of the BES, that act to trip the generator either directly or via lockout or tripping auxiliary relays.

5. Effective Date: See Implementation Plan

B. Requirements

R1. Each Transmission Owner, Generator Owner, and Distribution Provider shall establish a Protection System Maintenance Program (PSMP) for its Protection Systems identified in Section 4.2. *[Violation Risk Factor: Medium] [Time Horizon: Operations Planning]*

The PSMP shall:

1.1. Identify which maintenance method (time-based, performance-based per PRC-005 Attachment A, or a combination) is used to address each Protection System Component Type. All batteries associated with the station dc supply Component Type of a Protection System shall be included in a time-based program as described in Table 1-4 and Table 3.

> ***Component Type*** *- Any one of the five specific elements of the Protection System definition.*

1.2. Include the applicable monitored Component attributes applied to each Protection System Component Type consistent with the maintenance intervals specified in Tables 1-1 through 1-5, Table 2, and Table 3 where monitoring is used to extend the maintenance intervals beyond those specified for unmonitored Protection System Components.

> **Component** – *A component is any individual discrete piece of equipment included in a Protection System, including but not limited to a protective relay or current sensing device. The designation of what constitutes a control circuit component is very dependent upon how an entity performs and tracks the testing of the control circuitry. Some entities test their control circuits on a breaker basis whereas others test their circuitry on a local zone of protection basis. Thus, entities are allowed the latitude to designate their own definitions of control circuit components. Another example of where the entity has some discretion on determining what constitutes a single component is the voltage and current sensing devices, where the entity may choose either to designate a full three-phase set of such devices or a single device as a single component.*

R2. Each Transmission Owner, Generator Owner, and Distribution Provider that uses performance-based maintenance intervals in its PSMP shall follow the procedure established in PRC-005 Attachment A to establish and maintain its performance-based intervals. *[Violation Risk Factor: Medium] [Time Horizon: Operations Planning]*

R3. Each Transmission Owner, Generator Owner, and Distribution Provider that utilizes time-based maintenance program(s) shall maintain its Protection System Components that are included within the time-based maintenance program in accordance with the minimum maintenance activities and maximum maintenance intervals prescribed within Tables 1-1 through 1-5, Table 2, and Table 3. *[Violation Risk Factor: High] [Time Horizon: Operations Planning]*

R4. Each Transmission Owner, Generator Owner, and Distribution Provider that utilizes performance-based maintenance program(s) in accordance with Requirement R2 shall implement and follow its PSMP for its Protection System Components that are included within the performance-based program(s). *[Violation Risk Factor: High] [Time Horizon: Operations Planning]*

R5. Each Transmission Owner, Generator Owner, and Distribution Provider shall demonstrate efforts to correct identified Unresolved Maintenance Issues. *[Violation Risk Factor: Medium] [Time Horizon: Operations Planning]*

> ***Unresolved Maintenance Issue*** *- A deficiency identified during a maintenance activity that causes the component to not meet the intended performance, cannot be corrected during the maintenance interval, and requires follow-up corrective action.*

C. Measures

M1. Each Transmission Owner, Generator Owner and Distribution Provider shall have a documented Protection System Maintenance Program in accordance with Requirement R1.

For each Protection System Component Type, the documentation shall include the type of maintenance method applied (time-based, performance-based, or a combination of these maintenance methods), and shall include all batteries associated with the station dc supply Component Types in a time-based program as described in Table 1-4 and Table 3. (Part 1.1)

For Component Types that use monitoring to extend the maintenance intervals, the responsible entity(s) shall have evidence for each protection Component Type (such as manufacturer's specifications or engineering drawings) of the appropriate monitored Component attributes as specified in Tables 1-1 through 1-5, Table 2, and Table 3. (Part 1.2)

M2. Each Transmission Owner, Generator Owner, and Distribution Provider that uses performance-based maintenance intervals shall have evidence that its current performance-based maintenance program(s) is in accordance with Requirement R2, which may include but is not limited to Component lists, dated maintenance records, and dated analysis records and results.

M3. Each Transmission Owner, Generator Owner, and Distribution Provider that utilizes time-based maintenance program(s) shall have evidence that it has maintained its Protection System Components included within its time-based program in accordance with Requirement R3. The evidence may include but is not limited to dated maintenance records, dated maintenance summaries, dated check-off lists, dated inspection records, or dated work orders.

M4. Each Transmission Owner, Generator Owner, and Distribution Provider that utilizes performance-based maintenance intervals in accordance with Requirement R2 shall have evidence that it has implemented the Protection System Maintenance Program for the Protection System Components included in its performance-based program in accordance with Requirement R4. The evidence may include but is not limited to dated maintenance records, dated maintenance summaries, dated check-off lists, dated inspection records, or dated work orders.

M5. Each Transmission Owner, Generator Owner, and Distribution Provider shall have evidence that it has undertaken efforts to correct identified Unresolved Maintenance Issues in accordance with Requirement R5. The evidence may include but is not limited to work orders, replacement Component orders, invoices, project schedules with completed milestones, return material authorizations (RMAs) or purchase orders.

D. Compliance

1. Compliance Monitoring Process

1.1. Compliance Enforcement Authority

Regional Entity

1.2. Compliance Monitoring and Enforcement Processes:

Compliance Audit

Self-Certification

Spot Checking

Compliance Investigation

Self-Reporting

Complaint

1.3. Evidence Retention

The following evidence retention periods identify the period of time an entity is required to retain specific evidence to demonstrate compliance. For instances where the evidence retention period specified below is shorter than the time since the last audit, the Compliance Enforcement Authority may ask an entity to provide other evidence to show that it was compliant for the full time period since the last audit.

The Transmission Owner, Generator Owner, and Distribution Provider shall each keep data or evidence to show compliance as identified below unless directed by its Compliance Enforcement Authority to retain specific evidence for a longer period of time as part of an investigation.

For Requirement R1, the Transmission Owner, Generator Owner, and Distribution Provider shall each keep its current dated Protection System Maintenance Program, as well as any superseded versions since the preceding compliance audit, including the documentation that specifies the type of maintenance program applied for each Protection System Component Type.

For Requirement R2, Requirement R3, Requirement R4, and Requirement R5, the Transmission Owner, Generator Owner, and Distribution Provider shall each keep documentation of the two most recent performances of each distinct maintenance activity for the Protection System Component, or all performances of each distinct maintenance activity for the Protection System Component since the previous scheduled audit date, whichever is longer.

The Compliance Enforcement Authority shall keep the last audit records and all requested and submitted subsequent audit records.

1.4. Additional Compliance Information

None.

2. Violation Severity Levels

Requirement Number	Lower VSL	Moderate VSL	High VSL	Severe VSL
R1	The responsible entity's PSMP failed to specify whether one Component Type is being addressed by time-based or performance-based maintenance, or a combination of both. (Part 1.1) OR The responsible entity's PSMP failed to include applicable station batteries in a time-based program. (Part 1.1)	The responsible entity's PSMP failed to specify whether two Component Types are being addressed by time-based or performance-based maintenance, or a combination of both. (Part 1.1)	The responsible entity's PSMP failed to include the applicable monitoring attributes applied to each Protection System Component Type consistent with the maintenance intervals specified in Tables 1-1 through 1-5, Table 2, and Table 3 where monitoring is used to extend the maintenance intervals beyond those specified for unmonitored Protection System Components. (Part 1.2).	The responsible entity failed to establish a PSMP. OR The responsible entity failed to specify whether three or more Component Types are being addressed by time-based or performance-based maintenance, or a combination of both. (Part 1.1).
R2	The responsible entity uses performance-based maintenance intervals in its PSMP but failed to reduce Countable Events to no more than 4% within three years.	NA	The responsible entity uses performance-based maintenance intervals in its PSMP but failed to reduce Countable Events to no more than 4% within four years.	The responsible entity uses performance-based maintenance intervals in its PSMP but: 1) Failed to establish the technical justification described within Requirement R2 for the initial use of the performance-based PSMP OR 2) Failed to reduce Countable Events to no more than 4% within five years OR 3) Maintained a Segment with less than 60 Components OR 4) Failed to: • Annually update the list of Components, OR

Requirement Number	Lower VSL	Moderate VSL	High VSL	Severe VSL
				• Annually perform maintenance on the greater of 5% of the segment population or 3 Components, OR • Annually analyze the program activities and results for each Segment.
R3	For Protection System Components included within a time-based maintenance program, the responsible entity failed to maintain 5% or less of the total Components included within a specific Protection System Component Type, in accordance with the minimum maintenance activities and maximum maintenance intervals prescribed within Tables 1-1 through 1-5, Table 2, and Table 3.	For Protection System Components included within a time-based maintenance program, the responsible entity failed to maintain more than 5% but 10% or less of the total Components included within a specific Protection System Component Type, in accordance with the minimum maintenance activities and maximum maintenance intervals prescribed within Tables 1-1 through 1-5, Table 2, and Table 3.	For Protection System Components included within a time-based maintenance program, the responsible entity failed to maintain more than 10% but 15% or less of the total Components included within a specific Protection System Component Type, in accordance with the minimum maintenance activities and maximum maintenance intervals prescribed within Tables 1-1 through 1-5, Table 2, and Table 3.	For Protection System Components included within a time-based maintenance program, the responsible entity failed to maintain more than 15% of the total Components included within a specific Protection System Component Type, in accordance with the minimum maintenance activities and maximum maintenance intervals prescribed within Tables 1-1 through 1-5, Table 2, and Table 3.
R4	For Protection System Components included within a performance-based maintenance program, the responsible entity failed to maintain 5% or less of the annual scheduled maintenance for a specific Protection System Component Type in accordance with their performance-based PSMP.	For Protection System Components included within a performance-based maintenance program, the responsible entity failed to maintain more than 5% but 10% or less of the annual scheduled maintenance for a specific Protection System Component Type in accordance with their performance-based PSMP.	For Protection System Components included within a performance-based maintenance program, the responsible entity failed to maintain more than 10% but 15% or less of the annual scheduled maintenance for a specific Protection System Component Type in accordance with their performance-based PSMP.	For Protection System Components included within a performance-based maintenance program, the responsible entity failed to maintain more than 15% of the annual scheduled maintenance for a specific Protection System Component Type in accordance with their performance-based PSMP.
R5	The responsible entity failed to undertake efforts to correct 5 or fewer Unresolved Maintenance	The responsible entity failed to undertake efforts to correct greater than 5, but less than or equal to 10	The responsible entity failed to undertake efforts to correct greater than 10, but less than or equal to 15	The responsible entity failed to undertake efforts to correct greater than 15 Unresolved Maintenance

Requirement Number	Lower VSL	Moderate VSL	High VSL	Severe VSL
	Issues.	Unresolved Maintenance Issues.	Unresolved Maintenance Issues.	Issues.

E. Regional Variances

None

F. Supplemental Reference Document

The following documents present a detailed discussion about determination of maintenance intervals and other useful information regarding establishment of a maintenance program.

1. PRC-005-2 Protection System Maintenance Supplementary Reference and FAQ — May 2012.

Version History

Version	Date	Action	Change Tracking
2	TBD	Complete revision, absorbing maintenance requirements from PRC-005-1, PRC-005-1a, PRC-008-0, PRC-011-0, PRC-017	Complete revision

Table 1-1 Component Type - Protective Relay Excluding distributed UFLS and distributed UVLS (see Table 3)		
Component Attributes	**Maximum Maintenance Interval**[1]	**Maintenance Activities**
Any unmonitored protective relay not having all the monitoring attributes of a category below.	6 calendar years	For all unmonitored relays: • Verify that settings are as specified For non-microprocessor relays: • Test and, if necessary calibrate For microprocessor relays: • Verify operation of the relay inputs and outputs that are essential to proper functioning of the Protection System. • Verify acceptable measurement of power system input values.
Monitored microprocessor protective relay with the following: • Internal self-diagnosis and alarming (see Table 2). • Voltage and/or current waveform sampling three or more times per power cycle, and conversion of samples to numeric values for measurement calculations by microprocessor electronics. • Alarming for power supply failure (see Table 2).	12 calendar years	Verify: • Settings are as specified. • Operation of the relay inputs and outputs that are essential to proper functioning of the Protection System. • Acceptable measurement of power system input values.

[1] For the tables in this standard, a calendar year starts on the first day of a new year (January 1) after a maintenance activity has been completed. For the tables in this standard, a calendar month starts on the first day of the first month after a maintenance activity has been completed.

Table 1-1 Component Type - Protective Relay Excluding distributed UFLS and distributed UVLS (see Table 3)		
Component Attributes	**Maximum Maintenance Interval[1]**	**Maintenance Activities**
Monitored microprocessor protective relay with preceding row attributes and the following: • Ac measurements are continuously verified by comparison to an independent ac measurement source, with alarming for excessive error (See Table 2). • Some or all binary or status inputs and control outputs are monitored by a process that continuously demonstrates ability to perform as designed, with alarming for failure (See Table 2). • Alarming for change of settings (See Table 2).	12 calendar years	Verify only the unmonitored relay inputs and outputs that are essential to proper functioning of the Protection System.

Table 1-2 Component Type - Communications Systems Excluding distributed UFLS and distributed UVLS (see Table 3)		
Component Attributes	**Maximum Maintenance Interval**	**Maintenance Activities**
Any unmonitored communications system necessary for correct operation of protective functions, and not having all the monitoring attributes of a category below.	4 calendar months	Verify that the communications system is functional.
	12 calendar years	Verify that the channel meets performance criteria pertinent to the communications technology applied (e.g. signal level, reflected power, or data error rate). Verify operation of communication system inputs and outputs that are essential to proper functioning of the Protection System.
Any communications system with continuous monitoring or periodic automated testing for the presence of the channel function, and alarming for loss of function (See Table 2).	12 calendar years	Verify that the channel meets performance criteria pertinent to the communications technology applied (e.g. signal level, reflected power, or data error rate). Verify operation of communication system inputs and outputs that are essential to proper functioning of the Protection System.
Any communications system with: • Continuous monitoring or periodic automated testing for the performance of the channel using criteria pertinent to the communications technology applied (e.g. signal level, reflected power, or data error rate, and alarming for excessive performance degradation). (See Table 2) • Some or all binary or status inputs and control outputs are monitored by a process that continuously demonstrates ability to perform as designed, with alarming for failure (See Table 2).	12 calendar years	Verify only the unmonitored communications system inputs and outputs that are essential to proper functioning of the Protection System

Table 1-3 Component Type - Voltage and Current Sensing Devices Providing Inputs to Protective Relays Excluding distributed UFLS and distributed UVLS (see Table 3)		
Component Attributes	**Maximum Maintenance Interval**	**Maintenance Activities**
Any voltage and current sensing devices not having monitoring attributes of the category below.	12 calendar years	Verify that current and voltage signal values are provided to the protective relays.
Voltage and Current Sensing devices connected to microprocessor relays with AC measurements are continuously verified by comparison of sensing input value, as measured by the microprocessor relay, to an independent ac measurement source, with alarming for unacceptable error or failure (see Table 2).	No periodic maintenance specified	None.

Table 1-4(a) Component Type – Protection System Station dc Supply Using Vented Lead-Acid (VLA) Batteries Excluding distributed UFLS and distributed UVLS (see Table 3) Protection System Station dc supply used only for non-BES interrupting devices for SPS, non-distributed UFLS systems, or non-distributed UVLS systems is excluded (see Table 1-4(e)).		
Component Attributes	**Maximum Maintenance Interval**	**Maintenance Activities**
Protection System Station dc supply using **Vented Lead-Acid (VLA) batteries** not having monitoring attributes of Table 1-4(f).	4 Calendar Months	Verify: • Station dc supply voltage Inspect: • Electrolyte level • For unintentional grounds
	18 Calendar Months	Verify: • Float voltage of battery charger • Battery continuity • Battery terminal connection resistance • Battery intercell or unit-to-unit connection resistance Inspect: • Cell condition of all individual battery cells where cells are visible – or measure battery cell/unit internal ohmic values where the cells are not visible • Physical condition of battery rack

Table 1-4(a) Component Type – Protection System Station dc Supply Using Vented Lead-Acid (VLA) Batteries Excluding distributed UFLS and distributed UVLS (see Table 3) Protection System Station dc supply used only for non-BES interrupting devices for SPS, non-distributed UFLS systems, or non-distributed UVLS systems is excluded (see Table 1-4(e)).		
Component Attributes	**Maximum Maintenance Interval**	**Maintenance Activities**
	18 Calendar Months -or- 6 Calendar Years	Verify that the station battery can perform as manufactured by evaluating cell/unit measurements indicative of battery performance (e.g. internal ohmic values or float current) against the station battery baseline. -or- Verify that the station battery can perform as manufactured by conducting a performance or modified performance capacity test of the entire battery bank.

Table 1-4(b) Component Type – Protection System Station dc Supply Using Valve-Regulated Lead-Acid (VRLA) Batteries Excluding distributed UFLS and distributed UVLS (see Table 3) Protection System Station dc supply used only for non-BES interrupting devices for SPS, non-distributed UFLS systems, or non-distributed UVLS systems is excluded (see Table 1-4(e)).		
Component Attributes	**Maximum Maintenance Interval**	**Maintenance Activities**
Protection System Station dc supply **with Valve Regulated Lead-Acid (VRLA) batteries** not having monitoring attributes of Table 1-4(f).	4 Calendar Months	Verify: • Station dc supply voltage Inspect: • For unintentional grounds
	6 Calendar Months	Inspect: • Condition of all individual units by measuring battery cell/unit internal ohmic values.
	18 Calendar Months	Verify: • Float voltage of battery charger • Battery continuity • Battery terminal connection resistance • Battery intercell or unit-to-unit connection resistance Inspect: • Physical condition of battery rack

Table 1-4(b) Component Type – Protection System Station dc Supply Using Valve-Regulated Lead-Acid (VRLA) Batteries Excluding distributed UFLS and distributed UVLS (see Table 3) Protection System Station dc supply used only for non-BES interrupting devices for SPS, non-distributed UFLS systems, or non-distributed UVLS systems is excluded (see Table 1-4(e)).		
Component Attributes	**Maximum Maintenance Interval**	**Maintenance Activities**
	6 Calendar Months -or- 3 Calendar Years	Verify that the station battery can perform as manufactured by evaluating cell/unit measurements indicative of battery performance (e.g. internal ohmic values or float current) against the station battery baseline. -or- Verify that the station battery can perform as manufactured by conducting a performance or modified performance capacity test of the entire battery bank.

Table 1-4(c) Component Type – Protection System Station dc Supply Using Nickel-Cadmium (NiCad) Batteries Excluding distributed UFLS and distributed UVLS (see Table 3) Station dc supply used only for non-BES interrupting devices for SPS, non-distributed UFLS system, or non-distributed UVLS systems is excluded (see Table 1-4(e)).		
Component Attributes	**Maximum Maintenance Interval**	**Maintenance Activities**
Protection System Station dc supply **Nickel-Cadmium (NiCad) batteries** not having monitoring attributes of Table 1-4(f).	4 Calendar Months	Verify: • Station dc supply voltage Inspect: • Electrolyte level • For unintentional grounds
	18 Calendar Months	Verify: • Float voltage of battery charger • Battery continuity • Battery terminal connection resistance • Battery intercell or unit-to-unit connection resistance Inspect: • Cell condition of all individual battery cells. • Physical condition of battery rack
	6 Calendar Years	Verify that the station battery can perform as manufactured by conducting a performance or modified performance capacity test of the entire battery bank.

Table 1-4(d) Component Type – Protection System Station dc Supply Using Non Battery Based Energy Storage Excluding distributed UFLS and distributed UVLS (see Table 3) Station dc supply used only for non-BES interrupting devices for SPS, non-distributed UFLS system, or non-distributed UVLS systems is excluded (see Table 1-4(e)).		
Component Attributes	**Maximum Maintenance Interval**	**Maintenance Activities**
Any Protection System station dc supply not using a battery and not having monitoring attributes of Table 1-4(f).	4 Calendar Months	Verify: • Station dc supply voltage Inspect: • For unintentional grounds
	18 Calendar Months	Inspect: Condition of non-battery based dc supply
	6 Calendar Years	Verify that the dc supply can perform as manufactured when ac power is not present.

Table 1-4(e) Component Type – Protection System Station dc Supply for non-BES Interrupting Devices for SPS, non-distributed UFLS, and non-distributed UVLS systems		
Component Attributes	**Maximum Maintenance Interval**	**Maintenance Activities**
Any Protection System dc supply used only for tripping only non-BES interrupting devices as part of a SPS, non-distributed UFLS, or non-distributed UVLS system and not having monitoring attributes of Table 1-4(f).	When control circuits are verified (See Table 1-5)	Verify Station dc supply voltage.

Table 1-4(f) Exclusions for Protection System Station dc Supply Monitoring Devices and Systems		
Component Attributes	**Maximum Maintenance Interval**	**Maintenance Activities**
Any station dc supply with high and low voltage monitoring and alarming of the battery charger voltage to detect charger overvoltage and charger failure (See Table 2).	No periodic maintenance specified	No periodic verification of station dc supply voltage is required.
Any battery based station dc supply with electrolyte level monitoring and alarming in every cell (See Table 2).		No periodic inspection of the electrolyte level for each cell is required.
Any station dc supply with unintentional dc ground monitoring and alarming (See Table 2).		No periodic inspection of unintentional dc grounds is required.
Any station dc supply with charger float voltage monitoring and alarming to ensure correct float voltage is being applied on the station dc supply (See Table 2).		No periodic verification of float voltage of battery charger is required.
Any battery based station dc supply with monitoring and alarming of battery string continuity (See Table 2).		No periodic verification of the battery continuity is required.
Any battery based station dc supply with monitoring and alarming of the intercell and/or terminal connection detail resistance of the entire battery (See Table 2).		No periodic verification of the intercell and terminal connection resistance is required.
Any Valve Regulated Lead-Acid (VRLA) or Vented Lead-Acid (VLA) station battery with internal ohmic value or float current monitoring and alarming, and evaluating present values relative to baseline internal ohmic values for every cell/unit (See Table 2).		No periodic evaluation relative to baseline of battery cell/unit measurements indicative of battery performance is required to verify the station battery can perform as manufactured.
Any Valve Regulated Lead-Acid (VRLA) or Vented Lead-Acid (VLA) station battery with monitoring and alarming of each cell/unit internal ohmic value (See Table 2).		No periodic inspection of the condition of all individual units by measuring battery cell/unit internal ohmic values of a station VRLA or Vented Lead-Acid (VLA) battery is required.

Table 1-5 Component Type - Control Circuitry Associated With Protective Functions Excluding distributed UFLS and distributed UVLS (see Table 3) **Note:** Table requirements apply to all Control Circuitry Components of Protection Systems, and SPSs except as noted.		
Component Attributes	**Maximum Maintenance Interval**	**Maintenance Activities**
Trip coils or actuators of circuit breakers, interrupting devices, or mitigating devices (regardless of any monitoring of the control circuitry).	6 calendar years	Verify that each trip coil is able to operate the circuit breaker, interrupting device, or mitigating device.
Electromechanical lockout devices which are directly in a trip path from the protective relay to the interrupting device trip coil (regardless of any monitoring of the control circuitry).	6 calendar years	Verify electrical operation of electromechanical lockout devices.
Unmonitored control circuitry associated with SPS.	12 calendar years	Verify all paths of the control circuits essential for proper operation of the SPS.
Unmonitored control circuitry associated with protective functions inclusive of all auxiliary relays.	12 calendar years	Verify all paths of the trip circuits inclusive of all auxiliary relays through the trip coil(s) of the circuit breakers or other interrupting devices.
Control circuitry associated with protective functions and/or SPS whose integrity is monitored and alarmed (See Table 2).	No periodic maintenance specified	None.

Table 2 – Alarming Paths and Monitoring In Tables 1-1 through 1-5 and Table 3, alarm attributes used to justify extended maximum maintenance intervals and/or reduced maintenance activities are subject to the following maintenance requirements		
Component Attributes	**Maximum Maintenance Interval**	**Maintenance Activities**
Any alarm path through which alarms in Tables 1-1 through 1-5 and Table 3 are conveyed from the alarm origin to the location where corrective action can be initiated, and not having all the attributes of the "Alarm Path with monitoring" category below. Alarms are reported within 24 hours of detection to a location where corrective action can be initiated.	12 Calendar Years	Verify that the alarm path conveys alarm signals to a location where corrective action can be initiated.
Alarm Path with monitoring: The location where corrective action is taken receives an alarm within 24 hours for failure of any portion of the alarming path from the alarm origin to the location where corrective action can be initiated.	No periodic maintenance specified	None.

Table 3 Maintenance Activities and Intervals for distributed UFLS and distributed UVLS Systems		
Component Attributes	**Maximum Maintenance Interval**	**Maintenance Activities**
Any unmonitored protective relay not having all the monitoring attributes of a category below.	6 calendar years	Verify that settings are as specified For non-microprocessor relays: • Test and, if necessary calibrate For microprocessor relays: • Verify operation of the relay inputs and outputs that are essential to proper functioning of the Protection System. • Verify acceptable measurement of power system input values.
Monitored microprocessor protective relay with the following: • Internal self diagnosis and alarming (See Table 2). • Voltage and/or current waveform sampling three or more times per power cycle, and conversion of samples to numeric values for measurement calculations by microprocessor electronics. Alarming for power supply failure (See Table 2).	12 calendar years	Verify: • Settings are as specified. • Operation of the relay inputs and outputs that are essential to proper functioning of the Protection System. • Acceptable measurement of power system input values
Monitored microprocessor protective relay with preceding row attributes and the following: • Ac measurements are continuously verified by comparison to an independent ac measurement source, with alarming for excessive error (See Table 2). • Some or all binary or status inputs and control outputs are monitored by a process that continuously demonstrates ability to perform as designed, with alarming for failure (See Table 2).	12 calendar years	Verify only the unmonitored relay inputs and outputs that are essential to proper functioning of the Protection System.

Table 3 Maintenance Activities and Intervals for distributed UFLS and distributed UVLS Systems		
Component Attributes	**Maximum Maintenance Interval**	**Maintenance Activities**
Alarming for change of settings (See Table 2).		
Voltage and/or current sensing devices associated with UFLS or UVLS systems.	12 calendar years	Verify that current and/or voltage signal values are provided to the protective relays.
Protection System dc supply for tripping non-BES interrupting devices used only for a UFLS or UVLS system.	12 calendar years	Verify Protection System dc supply voltage.
Control circuitry between the UFLS or UVLS relays and electromechanical lockout and/or tripping auxiliary devices (excludes non-BES interrupting device trip coils).	12 calendar years	Verify the path from the relay to the lockout and/or tripping auxiliary relay (including essential supervisory logic).
Electromechanical lockout and/or tripping auxiliary devices associated only with UFLS or UVLS systems (excludes non-BES interrupting device trip coils).	12 calendar years	Verify electrical operation of electromechanical lockout and/or tripping auxiliary devices.
Control circuitry between the electromechanical lockout and/or tripping auxiliary devices and the non-BES interrupting devices in UFLS or UVLS systems, or between UFLS or UVLS relays (with no interposing electromechanical lockout or auxiliary device) and the non-BES interrupting devices (excludes non-BES interrupting device trip coils).	No periodic maintenance specified	None.
Trip coils of non-BES interrupting devices in UFLS or UVLS systems.	No periodic maintenance specified	None.

PRC-005 — Attachment A

Criteria for a Performance-Based Protection System Maintenance Program

Purpose: To establish a technical basis for initial and continued use of a performance-based Protection System Maintenance Program (PSMP).

To establish the technical justification for the initial use of a performance-based PSMP:

1. Develop a list with a description of Components included in each designated Segment of the Protection System Component population, with a minimum **Segment** population of 60 Components.
2. Maintain the Components in each Segment according to the time-based maximum allowable intervals established in Tables 1-1 through 1-5 and Table 3 until results of maintenance activities for the Segment are available for a minimum of 30 individual Components of the Segment.
3. Document the maintenance program activities and results for each Segment, including maintenance dates and Countable Events for each included Component.
4. Analyze the maintenance program activities and results for each Segment to determine the overall performance of the Segment and develop maintenance intervals.
5. Determine the maximum allowable maintenance interval for each Segment such that the Segment experiences **Countable Events** on no more than 4% of the Components within the Segment, for the greater of either the last 30 Components maintained or all Components maintained in the previous year.

Segment – *Protection Systems or components of a consistent design standard, or a particular model or type from a single manufacturer that typically share other common elements. Consistent performance is expected across the entire population of a Segment. A Segment must contain at least sixty (60) individual components.*

Countable Event – *A failure of a component requiring repair or replacement, any condition discovered during the maintenance activities in Tables 1-1 through 1-5 and Table 3 which requires corrective action, or a Misoperation attributed to hardware failure or calibration failure. Misoperations due to product design errors, software errors, relay settings different from specified settings, Protection System component configuration errors, or Protection System application errors are not included in Countable Events.*

To maintain the technical justification for the ongoing use of a performance-based PSMP:

1. At least annually, update the list of Protection System Components and Segments and/or description if any changes occur within the Segment.
2. Perform maintenance on the greater of 5% of the Components (addressed in the performance based PSMP) in each Segment or 3 individual Components within the Segment in each year.
3. For the prior year, analyze the maintenance program activities and results for each Segment to determine the overall performance of the Segment.

4. Using the prior year's data, determine the maximum allowable maintenance interval for each Segment such that the Segment experiences Countable Events on no more than 4% of the Components within the Segment, for the greater of either the last 30 Components maintained or all Components maintained in the previous year.
5. If the Components in a Protection System Segment maintained through a performance-based PSMP experience 4% or more Countable Events, develop, document, and implement an action plan to reduce the Countable Events to less than 4% of the Segment population within 3 years.

Standard Development Roadmap

This section is maintained by the drafting team during the development of the standard and will be removed when the standard becomes effective.

Development Steps Completed:

1. Standards Committee approved posting SAR and draft standard on August 11, 2011.
2. SAR and draft standard were posted for a 45-day concurrent posting and initial ballot from August 15, 2011 through September 29, 2011.
3. Standard passed the initial ballot with the following results: Quorum - 84.32% and Affirmative - 73.93%.

Description of Current Draft:

This is the second draft of the Standard. This standard merges previous standards PRC-005-1b, PRC-008-0, PRC-011-0, and PRC-017-0. It also addresses FERC comments from Order 693, and addresses observations from the NERC System Protection and Control Task Force, as presented in *NERC SPCTF Assessment of Standards: PRC-005-1 — Transmission and Generation Protection System Maintenance and Testing, PRC-008-0 — Underfrequency Load Shedding Equipment Maintenance Programs, PRC-011-0 — UVLS System Maintenance and Testing, PRC-017-0 — Special Protection System Maintenance and Testing.*

Future Development Plan:

Anticipated Actions	Anticipated Date
1. Post for combined 30-day comment and successive ballot.	May – June, 2012
2. Drafting Team Responds to Comments	July – August, 2012
3. Conduct recirculation ballot	August, 2012

Definitions of Terms Used in Standard

This section includes all newly defined or revised terms used in the proposed standard. Terms already defined in the Reliability Standards Glossary of Terms are not repeated here. New or revised definitions listed below become approved when the proposed standard is approved. When the standard becomes effective, these defined terms will be removed from the individual standard and added to the Glossary.

Protection System Maintenance Program (PSMP) — An ongoing program by which Protection System components are kept in working order and proper operation of malfunctioning components is restored. A maintenance program for a specific component includes one or more of the following activities:

- Verify — Determine that the component is functioning correctly.
- Monitor — Observe the routine in-service operation of the component.
- Test — Apply signals to a component to observe functional performance or output behavior, or to diagnose problems.
- Inspect — ~~Detect visible~~Examine for signs of component failure, reduced performance ~~and~~or degradation.
- Calibrate — Adjust the operating threshold or measurement accuracy of a measuring element to meet the intended performance requirement.

Protection System (NERC Board of Trustees Approved Definition)

- Protective relays which respond to electrical quantities,
- Communications systems necessary for correct operation of protective functions,
- Voltage and current sensing devices providing inputs to protective relays,
- Station dc supply associated with protective functions (including station batteries, battery chargers, and non-battery-based dc supply), and
- Control circuitry associated with protective functions through the trip coil(s) of the circuit breakers or other interrupting devices.

The following terms are defined for use only within PRC-005-2, and should remain with the standard upon approval rather than being moved to the Glossary of Terms.

Unresolved Maintenance Issue – A deficiency identified during a maintenance activity that causes the component to not meet the intended performance, cannot be corrected during the maintenance interval, and requires follow-up corrective action.

Segment – Protection Systems or components of a consistent design standard, or a particular model or type from a single manufacturer that typically share other common elements. Consistent performance is expected across the entire population of a Segment. A Segment must contain at least sixty (60) individual components.

Component Type - Any one of the five specific elements of the Protection System definition.

Component – A Component is any individual discrete piece of equipment included in a Protection System, including but not limited to a protective relay or current sensing device. The designation of what constitutes a control circuit Component is dependent upon how an entity performs and tracks the testing of the control circuitry. Some entities test their control circuits on a breaker basis whereas others test their circuitry on a local zone of protection basis. Thus, entities are allowed the latitude to designate their

own definitions of control circuit Components. Another example of where the entity has some discretion on determining what constitutes a single Component is the voltage and current sensing devices, where the entity may choose either to designate a full three-phase set of such devices or a single device as a single Component.

Countable Event – A failure of a Component ~~which has failed and requires~~ requiring repair or replacement, any condition discovered during the maintenance activities in Tables 1-1 through 1-5 and Table 3 which requires corrective action or a Misoperation attributed to hardware failure or calibration failure. Misoperations due to product design errors, software errors, relay settings different from specified settings, Protection System Component configuration errors, or Protection System application errors are not included in Countable Events.

A. Introduction

1. Title: **Protection System Maintenance**

2. Number: PRC-005-2

3. Purpose: To document and implement programs for the maintenance of all Protection Systems affecting the reliability of the Bulk Electric System (BES) so that these Protection Systems are kept in working order.

4. Applicability:

4.1. Functional Entities:

4.1.1 Transmission Owner

4.1.2 Generator Owner

4.1.3 Distribution Provider

4.2. Facilities:

4.2.1 Protection Systems that are installed for the purpose of detecting Faults on BES Elements (lines, buses, transformers, etc.)

4.2.2 Protection Systems used for underfrequency load-shedding systems installed per ERO underfrequency load-shedding requirements.

4.2.3 Protection Systems used for undervoltage load-shedding systems installed to prevent system voltage collapse or voltage instability for BES reliability.

4.2.4 Protection Systems installed as a Special Protection System (SPS) for BES reliability.

4.2.5 Protection Systems for generator Facilities that are part of the BES, including:

4.2.5.1 Protection Systems that act to trip the generator either directly or via lockout or auxiliary tripping relays.

4.2.5.2 Protection Systems for generator step-up transformers for generators that are part of the BES.

4.2.5.3 Protection Systems for transformers connecting aggregated generation, where the aggregated generation is part of the BES (e.g., transformers connecting facilities such as wind-farms to the BES).

4.2.5.4 Protection Systems for station service or excitation transformers connected to the generator ~~connected station service transformers used on~~bus of generators which are part of the BES, that act to trip the generator either directly or via lockout or tripping auxiliary relays.

5. Effective Date: See Implementation Plan

B. Requirements

R1. Each Transmission Owner, Generator Owner, and Distribution Provider shall establish a Protection System Maintenance Program (PSMP) for its Protection Systems identified in Section 4.2. *[Violation Risk Factor: Medium] [Time Horizon: Operations Planning]*

The PSMP shall:

1.1. Identify which maintenance method (time-based, performance-based ~~(~~per PRC-005 Attachment A~~)~~, or a combination) is used to address each Protection System Component Type. All batteries associated with the station dc supply Component Type of a Protection System shall be included in a time-based program as described in Table 1-4 and Table 3.

> ***Component Type*** *- Any one of the five specific elements of the Protection System definition.*

1.2. Include the applicable monitored Component attributes applied to each Protection System Component Type consistent with the maintenance intervals specified in Tables 1-1 through 1-5, Table 2, and Table 3 where monitoring is used to extend the maintenance intervals beyond those specified for unmonitored Protection System Components.

> **Component** – *A component is any individual discrete piece of equipment included in a Protection System, including but not limited to a protective relay or current sensing device. The designation of what constitutes a control circuit component is very dependent upon how an entity performs and tracks the testing of the control circuitry. Some entities test their control circuits on a breaker basis whereas others test their circuitry on a local zone of protection basis. Thus, entities are allowed the latitude to designate their own definitions of control circuit components. Another example of where the entity has some discretion on determining what constitutes a single component is the voltage and current sensing devices, where the entity may choose either to designate a full three-phase set of such devices or a single device as a single component.*

R2. Each Transmission Owner, Generator Owner, and Distribution Provider that uses performance-based maintenance intervals in its PSMP shall follow the procedure established in PRC-005 Attachment A to establish and maintain its performance-based intervals. *[Violation Risk Factor: Medium] [Time Horizon: Operations Planning]*

R3. Each Transmission Owner, Generator Owner, and Distribution Provider that utilizes time-based maintenance program(s) shall maintain its Protection System Components that are included within the time-based maintenance program in accordance with the minimum maintenance activities and maximum maintenance intervals prescribed within Tables 1-1 through 1-5, Table 2, and Table 3. *[Violation Risk Factor: High] [Time Horizon: Operations Planning]*

R4. Each Transmission Owner, Generator Owner, and Distribution Provider that utilizes performance-based maintenance program(s) in accordance with Requirement R2 shall implement and follow its PSMP for its Protection System Components that are included within the performance-based program(s). *[Violation Risk Factor: High] [Time Horizon: Operations Planning]*

R5. Each Transmission Owner, Generator Owner, and Distribution Provider shall demonstrate efforts to correct identified Unresolved Maintenance Issues. *[Violation Risk Factor: Medium] [Time Horizon: Operations Planning]*

> ***Unresolved Maintenance Issue*** *- A deficiency identified during a maintenance activity that causes the component to not meet the intended performance, cannot be corrected during the maintenance interval, and requires follow-up corrective action.*

C. Measures

M1. Each Transmission Owner, Generator Owner and Distribution Provider shall have a documented Protection System Maintenance Program in accordance with Requirement R1.

For each Protection System Component Type, the documentation shall include the type of maintenance method applied (time-based, performance-based, or a combination of these maintenance methods), and shall include all batteries associated with the station dc supply Component Types in a time-based program as described in Table 1-4 and Table 3. (Part 1.1)

For Component Types that use monitoring to extend the maintenance intervals, the responsible entity(s) shall have evidence for each protection Component Type (such as manufacturer's specifications or engineering drawings) of the appropriate monitored Component attributes as specified in Tables 1-1 through 1-5, Table 2, and Table 3. (Part 1.2)

M2. Each Transmission Owner, Generator Owner, and Distribution Provider that uses performance-based maintenance intervals shall have evidence that its current performance-based maintenance program(s) is in accordance with Requirement R2, which may include but is not limited to Component lists, dated maintenance records, and dated analysis records and results.

M3. Each Transmission Owner, Generator Owner, and Distribution Provider that utilizes time-based maintenance program(s) shall have evidence that it has maintained its Protection System Components included within its time-based program in accordance with Requirement R3. The evidence may include but is not limited to dated maintenance records, dated maintenance summaries, dated check-off lists, dated inspection records, or dated work orders.

M4. Each Transmission Owner, Generator Owner, and Distribution Provider that utilizes performance-based maintenance intervals in accordance with Requirement R2 shall have evidence that it has implemented the Protection System Maintenance Program for the Protection System Components included in its performance-based program in accordance with Requirement R4. The evidence may include but is not limited to dated maintenance records, dated maintenance summaries, dated check-off lists, dated inspection records, or dated work orders.

M5. Each Transmission Owner, Generator Owner, and Distribution Provider shall have evidence that it has undertaken efforts to correct identified Unresolved Maintenance Issues in accordance with Requirement R5. The evidence may include but is not limited to work orders, replacement Component orders, invoices, project schedules with completed milestones, return material authorizations (RMAs) or purchase orders.

D. Compliance

1. Compliance Monitoring Process

1.1. Compliance Enforcement Authority

Regional Entity

1.2. Compliance Monitoring and Enforcement Processes:

Compliance Audit

Self-Certification

Spot Checking

Compliance Investigation

Self-Reporting

Complaint~~s~~

1.3. Evidence Retention

The following evidence retention periods identify the period of time an entity is required to retain specific evidence to demonstrate compliance. For instances where the evidence retention period specified below is shorter than the time since the last audit, the Compliance Enforcement Authority may ask an entity to provide other evidence to show that it was compliant for the full time period since the last audit.

The Transmission Owner, Generator Owner, and Distribution Provider shall each keep data or evidence to show compliance as identified below unless directed by its Compliance Enforcement Authority to retain specific evidence for a longer period of time as part of an investigation.

For Requirement R1, the Transmission Owner, Generator Owner, and Distribution Provider shall each keep its current dated Protection System Maintenance Program, as well as any superseded versions since the preceding compliance audit, including the documentation that specifies the type of maintenance program applied for each Protection System Component Type.

For Requirement R2, Requirement R3, Requirement R4, and Requirement R5, the Transmission Owner, Generator Owner, and Distribution Provider shall each keep documentation of the two most recent performances of each distinct maintenance activity for the Protection System Component~~s~~, or all performances of each distinct maintenance activity for the Protection System Component since the previous scheduled audit date, whichever is longer.

The Compliance Enforcement Authority shall keep the last audit records and all requested and submitted subsequent audit records.

1.4. Additional Compliance Information

None.

2. Violation Severity Levels

Requirement Number	Lower VSL	Moderate VSL	High VSL	Severe VSL
R1	The responsible entity's PSMP failed to specify whether one Component Type is being addressed by time-based or performance-based maintenance, or a combination of both. (Part 1.1) OR The responsible entity's PSMP failed to include applicable station batteries in a time-based program. (Part 1.1)	The responsible entity's PSMP failed to specify whether two Component Types are being addressed by time-based or performance-based maintenance, or a combination of both. (Part 1.1)	The responsible ~~entities'~~ entity's PSMP failed to include the applicable monitoring attributes applied to each Protection System Component Type consistent with the maintenance intervals specified in Tables 1-1 through 1-5, Table 2, and Table 3 where monitoring is used to extend the maintenance intervals beyond those specified for unmonitored Protection System Components. (Part 1.2).	The responsible entity failed to establish a PSMP. OR The responsible entity failed to specify whether three or more Component Types are being addressed by time-based or performance-based maintenance, or a combination of both. (Part 1.1).
R2	The responsible entity uses performance-based maintenance intervals in its PSMP but failed to reduce Countable Events to ~~less~~ no more than 4% within three years.	NA	The responsible entity uses performance-based maintenance intervals in its PSMP but failed to reduce Countable Events to ~~less~~ no more than 4% within four years.	The responsible entity uses performance-based maintenance intervals in its PSMP but: 1) Failed to establish the technical justification described within Requirement R2 for the initial use of the performance-based PSMP OR 2) Failed to reduce Countable Events to ~~less~~ no more than 4% within five years OR 3) Maintained a Segment with less than 60 Components OR 4) Failed to: • Annually update the list of Components, OR

Requirement Number	Lower VSL	Moderate VSL	High VSL	Severe VSL
				• Annually perform maintenance on the greater of 5% of the segment population or 3 Components, OR • Annually analyze the program activities and results for each Segment.
R3	For Protection System Components included within a time-based maintenance program, the responsible entity failed to maintain 5% or less of the total Components included within a specific Protection System Component Type, in accordance with the minimum maintenance activities and maximum maintenance intervals prescribed within Tables 1-1 through 1-5, Table 2, and Table 3.	For Protection System Components included within a time-based maintenance program, the responsible entity failed to maintain more than 5% but 10% or less of the total Components included within a specific Protection System Component Type, in accordance with the minimum maintenance activities and maximum maintenance intervals prescribed within Tables 1-1 through 1-5, Table 2, and Table 3.	For Protection System Components included within a time-based maintenance program, the responsible entity failed to maintain more than 10% but 15% or less of the total Components included within a specific Protection System Component Type, in accordance with the minimum maintenance activities and maximum maintenance intervals prescribed within Tables 1-1 through 1-5, Table 2, and Table 3.	For Protection System Components included within a time-based maintenance program, the responsible entity failed to maintain more than 15% of the total Components included within a specific Protection System Component Type, in accordance with the minimum maintenance activities and maximum maintenance intervals prescribed within Tables 1-1 through 1-5, Table 2, and Table 3.
R4	For Protection System Components included within a performance-based maintenance program, the responsible entity failed to maintain 5% or less of the annual scheduled maintenance for a specific Protection System Component Type in accordance with their performance-based PSMP.	For Protection System Components included within a performance-based maintenance program, the responsible entity failed to maintain more than 5% but 10% or less of the annual scheduled maintenance for a specific Protection System Component Type in accordance with their performance-based PSMP.	For Protection System Components included within a performance-based maintenance program, the responsible entity failed to maintain more than 10% but 15% or less of the annual scheduled maintenance for a specific Protection System Component Type in accordance with their performance-based PSMP.	For Protection System Components included within a performance-based maintenance program, the responsible entity failed to maintain more than 15% of the annual scheduled maintenance for a specific Protection System Component Type in accordance with their performance-based PSMP.
R5	The responsible entity failed to undertake efforts to correct 5 or ~~less~~ fewer Unresolved Maintenance	The responsible entity failed to undertake efforts to correct greater than 5, but less than or equal to 10	The responsible entity failed to undertake efforts to correct greater than 10, but less than or equal to 15	The responsible entity failed to undertake efforts to correct greater than 15 Unresolved Maintenance

Requirement Number	Lower VSL	Moderate VSL	High VSL	Severe VSL
	Issues.	Unresolved Maintenance Issues.	Unresolved Maintenance Issues.	Issues.

E. Regional Variances

None

F. Supplemental Reference Document

The following documents present a detailed discussion about determination of maintenance intervals and other useful information regarding establishment of a maintenance program.

1. PRC-005-2 Protection System Maintenance Supplementary Reference and FAQ — ~~July~~ May ~~2011~~2012.

Version History

Version	Date	Action	Change Tracking
2	TBD	Complete revision, absorbing maintenance requirements from PRC-005-1, PRC-005-1a, PRC-008-0, PRC-011-0, PRC-017	Complete revision

Table 1-1 Component Type - Protective Relay Excluding distributed UFLS and distributed UVLS (see Table 3)		
Component Attributes	**Maximum Maintenance Interval**[1]	**Maintenance Activities**
Any unmonitored protective relay not having all the monitoring attributes of a category below.	6 calendar years	For all unmonitored relays: • Verify that settings are as specified For non-microprocessor relays: • Test and, if necessary calibrate For microprocessor relays: • Verify operation of the relay inputs and outputs that are essential to proper functioning of the Protection System. • Verify acceptable measurement of power system input values.
Monitored microprocessor protective relay with the following: • Internal self-diagnosis and alarming (see Table 2). • Voltage and/or current waveform sampling three or more times per power cycle, and conversion of samples to numeric values for measurement calculations by microprocessor electronics. • Alarming for power supply failure (see Table 2).	12 calendar years	Verify: • Settings are as specified. • Operation of the relay inputs and outputs that are essential to proper functioning of the Protection System. • Acceptable measurement of power system input values.

[1] For the tables in this standard, a calendar year starts on the first day of a new year (January 1) after a maintenance activity has been completed. For the tables in this standard, a calendar month starts on the first day of the first month after a maintenance activity has been completed.

Table 1-1 Component Type - Protective Relay Excluding distributed UFLS and distributed UVLS (see Table 3)		
Component Attributes	**Maximum Maintenance Interval[1]**	**Maintenance Activities**
Monitored microprocessor protective relay with preceding row attributes and the following: • Ac measurements are continuously verified by comparison to an independent ac measurement source, with alarming for excessive error (See Table 2). • Some or all binary or status inputs and control outputs are monitored by a process that continuously demonstrates ability to perform as designed, with alarming for failure (See Table 2). • Alarming for change of settings (See Table 2).	12 calendar years	Verify only the unmonitored relay inputs and outputs that are essential to proper functioning of the Protection System.

Table 1-2 Component Type - Communications Systems Excluding distributed UFLS and distributed UVLS (see Table 3)		
Component Attributes	**Maximum Maintenance Interval**	**Maintenance Activities**
Any unmonitored communications system necessary for correct operation of protective functions, and not having all the monitoring attributes of a category below.	4 calendar months	Verify that the communications system is functional.
	~~6~~ 12 calendar years	Verify that the channel meets performance criteria pertinent to the communications technology applied (e.g. signal level, reflected power, or data error rate). Verify operation of communication system inputs and outputs that are essential to proper functioning of the Protection System.
Any communications system with continuous monitoring or periodic automated testing for the presence of the channel function, and alarming for loss of function (See Table 2).	12 calendar years	Verify that the channel meets performance criteria pertinent to the communications technology applied (e.g. signal level, reflected power, or data error rate). Verify operation of communication system inputs and outputs that are essential to proper functioning of the Protection System.
Any communications system with: • ~~continuous~~ Continuous monitoring or periodic automated testing for the performance of the channel using criteria pertinent to the communications technology applied (e.g. signal level, reflected power, or data error rate, and alarming for excessive performance degradation). (See Table 2) • Some or all binary or status inputs and control outputs are monitored by a process that continuously demonstrates ability to perform as designed, with alarming for failure (See Table 2).	12 calendar years~~No periodic maintenance specified~~	Verify only the unmonitored communications system inputs and outputs that are essential to proper functioning of the Protection System~~None.~~

Table 1-3 Component Type - Voltage and Current Sensing Devices Providing Inputs to Protective Relays Excluding distributed UFLS and distributed UVLS (see Table 3)		
Component Attributes	**Maximum Maintenance Interval**	**Maintenance Activities**
Any voltage and current sensing devices not having monitoring attributes of the category below.	12 calendar years	Verify that current and voltage signal values are provided to the protective relays.
Voltage and Current Sensing devices connected to microprocessor relays with AC measurements are continuously verified by comparison of sensing input value, as measured by the microprocessor relay, to an independent ac measurement source, with alarming for unacceptable error or failure (see Table 2).	No periodic maintenance specified	None.

Table 1-4(a) Component Type – Protection System Station dc Supply Using Vented Lead-Acid (VLA) Batteries Excluding distributed UFLS and distributed UVLS (see Table 3) Protection System Station dc supply used only for non-BES interrupting devices for SPS, non-distributed UFLS systems, or non-distributed UVLS systems is excluded (see Table 1-4(e)).		
Component Attributes	**Maximum Maintenance Interval**	**Maintenance Activities**
Protection System Station dc supply using **Vented Lead-Acid (VLA) batteries** not having monitoring attributes of Table 1-4(f).	4 Calendar Months	Verify: • Station dc supply voltage Inspect: • Electrolyte level • For unintentional grounds
	18 Calendar Months	Verify: • Float voltage of battery charger • Battery continuity • Battery terminal connection resistance • Battery intercell or unit-to-unit connection resistance Inspect: • Cell condition of all individual battery cells where cells are visible – or measure battery cell/unit internal ohmic values where the cells are not visible • Physical condition of battery rack

Table 1-4(a) Component Type – Protection System Station dc Supply Using Vented Lead-Acid (VLA) Batteries Excluding distributed UFLS and distributed UVLS (see Table 3) Protection System Station dc supply used only for non-BES interrupting devices for SPS, non-distributed UFLS systems, or non-distributed UVLS systems is excluded (see Table 1-4(e)).		
Component Attributes	**Maximum Maintenance Interval**	**Maintenance Activities**
	18 Calendar Months -or- 6 Calendar Years	Verify that the station battery can perform as ~~designed~~ manufactured by evaluating ~~the measured~~ cell/unit ~~internal ohmic values~~measurements indicative of battery performance (e.g. internal ohmic values or float current) ~~to~~ against the station battery baseline. -or- Verify that the station battery can perform as ~~designed~~ manufactured by conducting a performance~~, service,~~ or modified performance capacity test of the entire battery bank.

Table 1-4(b) Component Type – Protection System Station dc Supply Using Valve-Regulated Lead-Acid (VRLA) Batteries Excluding distributed UFLS and distributed UVLS (see Table 3) Protection System Station dc supply used only for non-BES interrupting devices for SPS, non-distributed UFLS systems, or non-distributed UVLS systems is excluded (see Table 1-4(e)).		
Component Attributes	**Maximum Maintenance Interval**	**Maintenance Activities**
Protection System Station dc supply **with Valve Regulated Lead-Acid (VRLA) batteries** not having monitoring attributes of Table 1-4(f).	4 Calendar Months	Verify: • Station dc supply voltage Inspect: • For unintentional grounds
	6 Calendar Months	Inspect: • Condition of all individual units by measuring battery cell/unit internal ohmic values.
	18 Calendar Months	Verify: • Float voltage of battery charger • Battery continuity • Battery terminal connection resistance • Battery intercell or unit-to-unit connection resistance Inspect: • Physical condition of battery rack

Table 1-4(b) Component Type – Protection System Station dc Supply Using Valve-Regulated Lead-Acid (VRLA) Batteries Excluding distributed UFLS and distributed UVLS (see Table 3) Protection System Station dc supply used only for non-BES interrupting devices for SPS, non-distributed UFLS systems, or non-distributed UVLS systems is excluded (see Table 1-4(e)).		
Component Attributes	**Maximum Maintenance Interval**	**Maintenance Activities**
	6 Calendar Months -or- 3 Calendar Years	Verify that the station battery can perform as ~~designed~~ manufactured by evaluating ~~the measured~~ cell/unit ~~internal ohmic values~~ measurements indicative of battery performance (e.g. internal ohmic values or float current) ~~to~~ against the station battery baseline. -or- Verify that the station battery can perform as ~~designed~~ manufactured by conducting a performance~~, service,~~ or modified performance capacity test of the entire battery bank.

Table 1-4(c) Component Type – Protection System Station dc Supply Using Nickel-Cadmium (NiCad) Batteries Excluding distributed UFLS and distributed UVLS (see Table 3) Station dc supply used only for non-BES interrupting devices for SPS, non-distributed UFLS system, or non-distributed UVLS systems is excluded (see Table 1-4(e)).		
Component Attributes	**Maximum Maintenance Interval**	**Maintenance Activities**
Protection System Station dc supply **Nickel-Cadmium (NiCad) batteries** not having monitoring attributes of Table 1-4(f).	4 Calendar Months	Verify: • Station dc supply voltage Inspect: • Electrolyte level • For unintentional grounds
	18 Calendar Months	Verify: • Float voltage of battery charger • Battery continuity • Battery terminal connection resistance • Battery intercell or unit-to-unit connection resistance Inspect: • Cell condition of all individual battery cells. • Physical condition of battery rack
	6 Calendar Years	Verify that the station battery can perform as ~~designed~~ manufactured by conducting a performance ~~service,~~ or modified performance capacity test of the entire battery bank.

Table 1-4(d) Component Type – Protection System Station dc Supply Using Non Battery Based Energy Storage Excluding distributed UFLS and distributed UVLS (see Table 3) Station dc supply used only for non-BES interrupting devices for SPS, non-distributed UFLS system, or non-distributed UVLS systems is excluded (see Table 1-4(e)).		
Component Attributes	**Maximum Maintenance Interval**	**Maintenance Activities**
Any Protection System station dc supply not using a battery and not having monitoring attributes of Table 1-4(f).	4 Calendar Months	Verify: • Station dc supply voltage Inspect: • For unintentional grounds
	18 Calendar Months	Inspect: Condition of non-battery based dc supply
	6 Calendar Years	Verify that the dc supply can perform as ~~designed~~ manufactured when ac power is not present.

Table 1-4(e) Component Type – Protection System Station dc Supply for non-BES Interrupting Devices for SPS, non-distributed UFLS, and non-distributed UVLS systems		
Component Attributes	**Maximum Maintenance Interval**	**Maintenance Activities**
Any Protection System dc supply used only for tripping only non-BES interrupting devices as part of a SPS, non-distributed UFLS, or non-distributed UVLS system and not having monitoring attributes of Table 1-4(f).	When control circuits are verified (See Table 1-5)	Verify Station dc supply voltage.

Table 1-4(f) Exclusions for Protection System Station dc Supply Monitoring Devices and Systems		
Component Attributes	**Maximum Maintenance Interval**	**Maintenance Activities**
Any station dc supply with high and low voltage monitoring and alarming of the battery charger voltage to detect charger overvoltage and charger failure (See Table 2).	No periodic maintenance specified	No periodic verification of station dc supply voltage is required.
Any battery based station dc supply with electrolyte level monitoring and alarming in every cell (See Table 2).		No periodic inspection of the electrolyte level for each cell is required.
Any station dc supply with unintentional dc ground monitoring and alarming (See Table 2).		No periodic inspection of unintentional dc grounds is required.
Any station dc supply with charger float voltage monitoring and alarming to ensure correct float voltage is being applied on the station dc supply (See Table 2).		No periodic verification of float voltage of battery charger is required.
Any battery based station dc supply with monitoring and alarming of battery string continuity (See Table 2).		No periodic verification of the battery continuity is required.
Any battery based station dc supply with monitoring and alarming of the intercell and/or terminal connection detail resistance of the entire battery (See Table 2).		No periodic verification of the intercell and terminal connection resistance is required.
Any Valve Regulated Lead-Acid (VRLA) or Vented Lead-Acid (VLA) station battery with internal ohmic value or float current monitoring and alarming, and evaluating present values relative to baseline internal ohmic values for every cell/unit (See Table 2).		No periodic ~~measurement and~~ evaluation relative to baseline of battery cell/unit measurements indicative of battery performance ~~internal ohmic values~~ is required to verify the station battery can perform as ~~designed~~manufactured.
Any Valve Regulated Lead-Acid (VRLA) or Vented Lead-Acid (VLA) station battery with monitoring and alarming of each cell/unit internal ohmic value (See Table 2).		No periodic inspection of the condition of all individual units by measuring battery cell/unit internal ohmic values of a station VRLA or Vented Lead-Acid (VLA) battery is required.

Table 1-5 Component Type - Control Circuitry Associated With Protective Functions Excluding distributed UFLS and distributed UVLS (see Table 3) **Note:** Table requirements apply to all Control Circuitry Components of Protection Systems, and SPSs except as noted.		
Component Attributes	**Maximum Maintenance Interval**	**Maintenance Activities**
Trip coils or actuators of circuit breakers, interrupting devices, or mitigating devices (regardless of any monitoring of the control circuitry).	6 calendar years	Verify that each trip coil is able to operate the circuit breaker, interrupting device, or mitigating device.
Electromechanical lockout devices which are directly in a trip path from the protective relay to the interrupting device trip coil (regardless of any monitoring of the control circuitry).	6 calendar years	Verify electrical operation of electromechanical lockout devices.
Unmonitored control circuitry associated with SPS.	12 calendar years	Verify all paths of the control circuits essential for proper operation of the SPS.
Unmonitored control circuitry associated with protective functions inclusive of all auxiliary relays.	12 calendar years	Verify all paths of the trip circuits inclusive of all auxiliary relays through the trip coil(s) of the circuit breakers or other interrupting devices.
Control circuitry associated with protective functions and/or SPS whose integrity is monitored and alarmed (See Table 2).	No periodic maintenance specified	None.

Table 2 – Alarming Paths and Monitoring In Tables 1-1 through 1-5 and Table 3, alarm attributes used to justify extended maximum maintenance intervals and/or reduced maintenance activities are subject to the following maintenance requirements		
Component Attributes	**Maximum Maintenance Interval**	**Maintenance Activities**
Any alarm path through which alarms in Tables 1-1 through 1-5 and Table 3 are conveyed from the alarm origin to the location where corrective action can be initiated, and not having all the attributes of the "Alarm Path with monitoring" category below. Alarms are reported within 24 hours of detection to a location where corrective action can be initiated.	12 Calendar Years	Verify that the alarm path conveys alarm signals to a location where corrective action can be initiated.
Alarm Path with monitoring: The location where corrective action is taken receives an alarm within 24 hours for failure of any portion of the alarming path from the alarm origin to the location where corrective action can be initiated.	No periodic maintenance specified	None.

Table 3 Maintenance Activities and Intervals for distributed UFLS and distributed UVLS Systems		
Component Attributes	**Maximum Maintenance Interval**	**Maintenance Activities**
Any unmonitored protective relay not having all the monitoring attributes of a category below.	6 calendar years	Verify that settings are as specified For non-microprocessor relays: • Test and, if necessary calibrate For microprocessor relays: • Verify operation of the relay inputs and outputs that are essential to proper functioning of the Protection System. • Verify acceptable measurement of power system input values.
Monitored microprocessor protective relay with the following: • Internal self diagnosis and alarming (See Table 2). • Voltage and/or current waveform sampling three or more times per power cycle, and conversion of samples to numeric values for measurement calculations by microprocessor electronics. Alarming for power supply failure (See Table 2).	12 calendar years	Verify: • Settings are as specified. • Operation of the relay inputs and outputs that are essential to proper functioning of the Protection System. • Acceptable measurement of power system input values
Monitored microprocessor protective relay with preceding row attributes and the following: • Ac measurements are continuously verified by comparison to an independent ac measurement source, with alarming for excessive error (See Table 2). • Some or all binary or status inputs and control outputs are monitored by a process that continuously demonstrates ability to perform as designed, with alarming for failure (See Table 2).	12 calendar years	Verify only the unmonitored relay inputs and outputs that are essential to proper functioning of the Protection System.

Table 3 Maintenance Activities and Intervals for distributed UFLS and distributed UVLS Systems		
Component Attributes	**Maximum Maintenance Interval**	**Maintenance Activities**
Alarming for change of settings (See Table 2).		
Voltage and/or current sensing devices associated with UFLS or UVLS systems.	12 calendar years	Verify that current and/or voltage signal values are provided to the protective relays.
Protection System dc supply for tripping non-BES interrupting devices used only for a UFLS or UVLS system.	12 calendar years	Verify Protection System dc supply voltage.
Control circuitry between the UFLS or UVLS relays and electromechanical lockout and/or tripping auxiliary devices (excludes non-BES interrupting device trip coils).	12 calendar years	Verify the path from the relay to the lockout and/or tripping auxiliary relay (including essential supervisory logic).
Electromechanical lockout and/or tripping auxiliary devices associated only with UFLS or UVLS systems (excludes non-BES interrupting device trip coils).	12 calendar years	Verify electrical operation of electromechanical lockout and/or tripping auxiliary devices.
Control circuitry between the electromechanical lockout and/or tripping auxiliary devices and the non-BES interrupting devices in UFLS or UVLS systems, or between UFLS or UVLS relays (with no interposing electromechanical lockout or auxiliary device) and the non-BES interrupting devices (excludes non-BES interrupting device trip coils).	No periodic maintenance specified	None.
Trip coils of non-BES interrupting devices in UFLS or UVLS systems.	No periodic maintenance specified	None.

PRC-005 — Attachment A

Criteria for a Performance-Based Protection System Maintenance Program

Purpose: To establish a technical basis for initial and continued use of a performance-based Protection System Maintenance Program (PSMP).

To establish the technical justification for the initial use of a performance-based PSMP:

1. Develop a list with a description of Components included in each designated Segment of the Protection System Component population, with a minimum **Segment** population of 60 Components.
2. Maintain the Components in each Segment according to the time-based maximum allowable intervals established in Tables 1-1 through 1-5 and Table 3 until results of maintenance activities for the Segment are available for a minimum of 30 individual Components of the Segment.
3. Document the maintenance program activities and results for each Segment, including maintenance dates and Countable Events for each included Component.
4. Analyze the maintenance program activities and results for each Segment to determine the overall performance of the Segment and develop maintenance intervals.
5. Determine the maximum allowable maintenance interval for each Segment such that the Segment experiences **Countable Events** on no more than 4% of the Components within the Segment, for the greater of either the last 30 Components maintained or all Components maintained in the previous year.

Segment – *Protection Systems or components of a consistent design standard, or a particular model or type from a single manufacturer that typically share other common elements. Consistent performance is expected across the entire population of a Segment. A Segment must contain at least sixty (60) individual components.*

Countable Event – *A failure of a component ~~which has failed and requires~~ requiring repair or replacement, any condition discovered during the maintenance activities in Tables 1-1 through 1-5 and Table 3 which requires corrective action, or a Misoperation attributed to hardware failure or calibration failure. Misoperations due to product design errors, software errors, relay settings different from specified settings, Protection System component configuration errors, or Protection System application errors are not included in Countable Events.*

To maintain the technical justification for the ongoing use of a performance-based PSMP:

1. At least annually, update the list of Protection System Components and Segments and/or description if any changes occur within the Segment.
2. Perform maintenance on the greater of 5% of the Components (addressed in the performance based PSMP) in each Segment or 3 individual Components within the Segment in each year.
3. For the prior year, analyze the maintenance program activities and results for each Segment to determine the overall performance of the Segment.

4. Using the prior year's data, determine the maximum allowable maintenance interval for each Segment such that the Segment experiences Countable Events on no more than 4% of the Components within the Segment, for the greater of either the last 30 Components maintained or all Components maintained in the previous year.
5. If the Components in a Protection System Segment maintained through a performance-based PSMP experience 4% or more Countable Events, develop, document, and implement an action plan to reduce the Countable Events to less than 4% of the Segment population within 3 years.

NERC
NORTH AMERICAN ELECTRIC
RELIABILITY CORPORATION

Implementation Plan

Project 2007-17 Protection Systems Maintenance and Testing
PRC-005-02

Standards Involved
Approval:

- PRC-005-2 – Protection System Maintenance

Retirements:

- PRC-005-1b – Transmission and Generation Protection System Maintenance and Testing
- PRC-008-0 – Implementation and Documentation of Underfrequency Load Shedding Equipment Maintenance Program
- PRC-011-0 – Undervoltage Load Shedding System Maintenance and Testing
- PRC-017-0 – Special Protection System Maintenance and Testing

Prerequisite Approvals:
Revised definition of "Protection System"

Background:
The Implementation Plan reflects consideration of the following:

1. The requirements set forth in the proposed standard establish minimum maintenance activities for Protection System component types and the maximum allowable maintenance intervals for these maintenance activities. The maintenance activities established may not be presently performed by some entities and the established maximum allowable intervals may be shorter than those currently in use by some entities.
2. For entities not presently performing a maintenance activity or using longer intervals than the maximum allowable intervals established in the proposed standard, it is unrealistic for those entities to be immediately compliant with the new activities or intervals. Further, entities should be allowed to become compliant in such a way as to facilitate a continuing maintenance program.
3. Entities that have previously been performing maintenance within the newly specified intervals may not have all the documentation needed to demonstrate compliance with all of the maintenance activities specified.

4. The Implementation Schedule set forth in this document requires that entities develop their revised Protection System Maintenance Program within twelve (12) months following applicable regulatory approvals, or in those jurisdictions where no regulatory approval is required, on the first day of the first calendar quarter twenty-four (24) months following NERC Board of Trustees adoption. This anticipates that it will take approximately twelve (12) months to achieve regulatory approvals following adoption by the NERC Board of Trustees.
5. The Implementation Schedule set forth in this document facilitates implementation of the more lengthy maintenance intervals within the revised Protection System Maintenance Program in approximately equally-distributed steps over those intervals prescribed for each respective maintenance activity in order that entities may implement this standard in a systematic method that facilitates an effective ongoing Protection System Maintenance Program.

General Considerations:

Each Transmission Owner, Generator Owner, and Distribution Provider shall maintain documentation to demonstrate compliance with PRC-005-1a, PRC-008-0, PRC-011-0, and PRC-017-0 until that entity meets the requirements of PRC-005-2 in accordance with this implementation plan.

While entities are transitioning to the requirements of PRC-005-2, each entity must be prepared to identify:

- All of its applicable Protection System components.
- Whether each component has last been maintained according to PRC-005-2 or under PRC-005-1b, PRC-008-0, PRC-011-0, or PRC-017-0, or a combination thereof.

For activities being added to an entity's program as part of PRC-005-2 implementation, evidence may be available to show only a single performance of the activity until two maintenance intervals have transpired following initial implementation of PRC-005-2.

Retirement of Existing Standards:

The existing Standards PRC-005-1b, PRC-008-0, PRC-011-0, and PRC-017-0 shall be retired at midnight of the day immediately prior to the first day of the first calendar quarter following applicable regulatory approval of PRC-005-2 in all jurisdictions.

Implementation Plan for Definition:

Protection System Maintenance Program – Entities shall use this definition when implementing any portions of R1, R2 R3, R4 and R5 which use this defined term.

Implementation Plan for Requirements R1, R2 and R5:

Entities shall be 100% compliant on the first day of the first calendar quarter twelve (12) months following applicable regulatory approvals, or in those jurisdictions where no regulatory approval is required, on the first day of the first calendar quarter twenty-four (24) months following NERC Board of Trustees adoption or as otherwise made effective pursuant to the laws applicable to such ERO governmental authorities.

Implementation Plan for Requirements R3 and R4:

1. For Protection System component maintenance activities with maximum allowable intervals of less than one (1) calendar year, as established in Tables 1-1 through 1-5:
   - The entity shall be 100% compliant with PRC-005-2 on the first day of the first calendar quarter eighteen (18) months following applicable regulatory approval, or in those jurisdictions where no regulatory approval is required, on the first day of the first calendar quarter thirty (30) months following NERC Board of Trustees adoption or as otherwise made effective pursuant to the laws applicable to such ERO governmental authorities.
2. For Protection System component maintenance activities with maximum allowable intervals one (1) calendar year or more, but two (2) calendar years or less, as established in Tables 1-1 through 1-5:
   - The entity shall be 100% compliant with PRC-005-2 on the first day of the first calendar quarter thirty-six (36) months following applicable regulatory approval, or in those jurisdictions where no regulatory approval is required, on the first day of the first calendar quarter forty-eight (48) months following NERC Board of Trustees adoption or as otherwise made effective pursuant to the laws applicable to such ERO governmental authorities.
3. For Protection System component maintenance activities with maximum allowable intervals of three (3) calendar years, as established in Tables 1-1 through 1-5:
   - The entity shall be at least 30% compliant with PRC-005-2 on the first day of the first calendar quarter twenty-four (24) months following applicable regulatory approval (or, for generating plants with scheduled outage intervals exceeding two years, at the conclusion of the first succeeding maintenance outage), or in those jurisdictions where no regulatory approval is required, on the first day of the first calendar quarter thirty-six (36) months following NERC Board of Trustees adoption or as otherwise made effective pursuant to the laws applicable to such ERO governmental authorities.
   - The entity shall be at least 60% compliant with PRC-005-2 on the first day of the first calendar quarter thirty-six (36) months following applicable regulatory approval, or in those jurisdictions where no regulatory approval is required, on the first day of the first calendar quarter forty-eight (48) months following NERC Board of Trustees adoption or as otherwise made effective pursuant to the laws applicable to such ERO governmental authorities.

- The entity shall be 100% compliant with PRC-005-2 on the first day of the first calendar quarter forty-eight (48) months following applicable regulatory approval, or in those jurisdictions where no regulatory approval is required, on the first day of the first calendar quarter sixty (60) months following NERC Board of Trustees adoption or as otherwise made effective pursuant to the laws applicable to such ERO governmental authorities.

4. For Protection System component maintenance activities with maximum allowable intervals of six (6) calendar years, as established in Tables 1-1 through 1-5 and Table 3:

   - The entity shall be at least 30% compliant with PRC-005-2 on the first day of the first calendar quarter thirty-six (36) months following applicable regulatory approval (or, for generating plants with scheduled outage intervals exceeding three years, at the conclusion of the first succeeding maintenance outage), or in those jurisdictions where no regulatory approval is required, on the first day of the first calendar quarter forty-eight (48) months following NERC Board of Trustees adoption or as otherwise made effective pursuant to the laws applicable to such ERO governmental authorities.
   - The entity shall be at least 60% compliant with PRC-005-2 on the first day of the first calendar quarter sixty (60) months following applicable regulatory approval, or in those jurisdictions where no regulatory approval is required, on the first day of the first calendar quarter seventy-two (72) months following NERC Board of Trustees adoption or as otherwise made effective pursuant to the laws applicable to such ERO governmental authorities.
   - The entity shall be 100% compliant with PRC-005-2 on the first day of the first calendar quarter eighty-four (84) months following applicable regulatory approval, or in those jurisdictions where no regulatory approval is required, on the first day of the first calendar quarter ninety-six (96) months following NERC Board of Trustees adoption or as otherwise made effective pursuant to the laws applicable to such ERO governmental authorities.

5. For Protection System component maintenance activities with maximum allowable intervals of twelve (12) calendar years, as established in Tables 1-1 through 1-5, Table 2, and Table 3:

   - The entity shall be at least 30% compliant with PRC-005-2 on the first day of the first calendar quarter sixty (60) months following applicable regulatory approval, or in those jurisdictions where no regulatory approval is required, on the first day of the first calendar quarter seventy-two (72) months following NERC Board of Trustees adoption or as otherwise made effective pursuant to the laws applicable to such ERO governmental authorities.
   - The entity shall be at least 60% compliant with PRC-005-2 on the first day of the first calendar quarter following one hundred eight (108) months following applicable regulatory approval, or in those jurisdictions where no regulatory approval is required, on the first day of the first calendar quarter one hundred twenty (120) months following NERC Board of Trustees adoption or as otherwise made effective pursuant to the laws applicable to such ERO governmental authorities.

- The entity shall be 100% compliant with PRC-005-2 on the first day of the first calendar quarter one hundred fifty-six (156) months following applicable regulatory approval, or in those jurisdictions where no regulatory approval is required, on the first day of the first calendar quarter one hundred sixty-eight (168) months following NERC Board of Trustees adoption or as otherwise made effective pursuant to the laws applicable to such ERO governmental authorities.

Applicability:
This standard applies to the following functional entities:

- Transmission Owner
- Generator Owner
- Distribution Provider

NERC
NORTH AMERICAN ELECTRIC
RELIABILITY CORPORATION

Implementation Plan

Project 2007-17 Protection Systems Maintenance and Testing
PRC-005-02

Standards Involved

Approval:

- PRC-005-2 – Protection System Maintenance ~~and Testing~~

Retirements:

- PRC-005-~~1a~~ 1b – Transmission and Generation Protection System Maintenance and Testing
- PRC-008-0 – Implementation and Documentation of Underfrequency Load Shedding Equipment Maintenance Program
- PRC-011-0 – Undervoltage Load Shedding System Maintenance and Testing
- PRC-017-0 – Special Protection System Maintenance and Testing

Prerequisite Approvals:

Revised definition of "Protection System"

Background:

The Implementation Plan reflects consideration of the following:

1. The requirements set forth in the proposed standard establish minimum maintenance activities for Protection System component types and the maximum allowable maintenance intervals for these maintenance activities. The maintenance activities established may not be presently performed by some entities and the established maximum allowable intervals may be shorter than those currently in use by some entities.
2. For entities not presently performing a maintenance activity or using longer intervals than the maximum allowable intervals established in the proposed standard, it is unrealistic for those entities to be immediately compliant with the new activities or intervals. Further, entities should be allowed to become compliant in such a way as to facilitate a continuing maintenance program.
3. Entities that have previously been performing maintenance within the newly specified intervals may not have all the documentation needed to demonstrate compliance with all of the maintenance activities specified.

4. The Implementation Schedule set forth in this document requires that entities develop their revised Protection System Maintenance Program within twelve (12) months following applicable regulatory approvals, or in those jurisdictions where no regulatory approval is required, on the first day of the first calendar quarter twenty-four (24) months following NERC Board of Trustees adoption. This anticipates that it will take approximately twelve (12) months to achieve regulatory approvals following adoption by the NERC Board of Trustees.
5. The Implementation Schedule set forth in this document facilitates implementation of the more lengthy maintenance intervals within the revised Protection System Maintenance Program in approximately equally-distributed steps over those intervals prescribed for each respective maintenance activity in order that entities may implement this standard in a systematic method that facilitates an effective ongoing Protection System Maintenance Program.

General Considerations:

Each Transmission Owner, Generator Owner, and Distribution Provider shall maintain documentation to demonstrate compliance with PRC-005-1a, PRC-008-0, PRC-011-0, and PRC-017-0 until that entity meets the requirements of PRC-005-2 in accordance with this implementation plan.

While entities are transitioning to the requirements of PRC-005-2, each entity must be prepared to identify:

- All of its applicable Protection System components.
- Whether each component has last been maintained according to PRC-005-2 or under PRC-005-~~1a~~1b, PRC-008-0, PRC-011-0, or PRC-017-0, or a combination thereof.

For activities being added to an entity's program as part of PRC-005-2 implementation, evidence may be available to show only a single performance of the activity until two maintenance intervals have transpired following initial implementation of PRC-005-2.

Retirement of Existing Standards:

The existing Standards PRC-005-~~1a~~1b, PRC-008-0, PRC-011-0, and PRC-017-0 shall be retired at midnight of the day immediately prior to the first day of the first calendar quarter following applicable regulatory approval of PRC-005-2 in all jurisdictions.

Implementation Plan for Definition:

Protection System Maintenance Program – Entities shall use this definition when implementing any portions of R1, R2 R3, R4 and R5 which use this defined term.

Implementation Plan for Requirements R1, R2 and R5:

Entities shall be 100% compliant on the first day of the first calendar quarter twelve (12) months following applicable regulatory approvals, or in those jurisdictions where no regulatory approval is required, on the first day of the first calendar quarter twenty-four (24) months following NERC Board of Trustees adoption or as otherwise made effective pursuant to the laws applicable to such ERO governmental authorities.

Implementation Plan for Requirements R3 and R4:

1. For Protection System component maintenance activities with maximum allowable intervals of less than one (1) calendar year, as established in Tables 1-1 through 1-5:
   - The entity shall be 100% compliant with PRC-005-2 on the first day of the first calendar quarter eighteen (18) months following applicable regulatory approval, or in those jurisdictions where no regulatory approval is required, on the first day of the first calendar quarter thirty (30) months following NERC Board of Trustees adoption or as otherwise made effective pursuant to the laws applicable to such ERO governmental authorities.
2. For Protection System component maintenance activities with maximum allowable intervals one (1) calendar year or more, but two (2) calendar years or less, as established in Tables 1-1 through 1-5:
   - The entity shall be 100% compliant with PRC-005-2 on the first day of the first calendar quarter thirty-six (36) months following applicable regulatory approval, or in those jurisdictions where no regulatory approval is required, on the first day of the first calendar quarter forty-eight (48) months following NERC Board of Trustees adoption or as otherwise made effective pursuant to the laws applicable to such ERO governmental authorities.
3. For Protection System component maintenance activities with maximum allowable intervals of three (3) calendar years, as established in Tables 1-1 through 1-5:
   - The entity shall be at least 30% compliant with PRC-005-2 on the first day of the first calendar quarter twenty-four (24) months following applicable regulatory approval (or, for generating plants with scheduled outage intervals exceeding two years, at the conclusion of the first succeeding maintenance outage), or in those jurisdictions where no regulatory approval is required, on the first day of the first calendar quarter thirty-six (36) months following NERC Board of Trustees adoption or as otherwise made effective pursuant to the laws applicable to such ERO governmental authorities.
   - The entity shall be at least 60% compliant with PRC-005-2 on the first day of the first calendar quarter thirty-six (36) months following applicable regulatory approval, or in those jurisdictions where no regulatory approval is required, on the first day of the first calendar quarter forty-eight (48) months following NERC Board of Trustees adoption or as otherwise made effective pursuant to the laws applicable to such ERO governmental authorities.

- The entity shall be 100% compliant with PRC-005-2 on the first day of the first calendar quarter forty-eight (48) months following applicable regulatory approval, or in those jurisdictions where no regulatory approval is required, on the first day of the first calendar quarter sixty (60) months following NERC Board of Trustees adoption or as otherwise made effective pursuant to the laws applicable to such ERO governmental authorities.

4. For Protection System component maintenance activities with maximum allowable intervals of six (6) calendar years, as established in Tables 1-1 through 1-5 and Table 3:

- The entity shall be at least 30% compliant with PRC-005-2 on the first day of the first calendar quarter thirty-six (36) months following applicable regulatory approval (or, for generating plants with scheduled outage intervals exceeding three years, at the conclusion of the first succeeding maintenance outage), or in those jurisdictions where no regulatory approval is required, on the first day of the first calendar quarter forty-eight (48) months following NERC Board of Trustees adoption or as otherwise made effective pursuant to the laws applicable to such ERO governmental authorities.
- The entity shall be at least 60% compliant with PRC-005-2 on the first day of the first calendar quarter sixty (60) months following applicable regulatory approval, or in those jurisdictions where no regulatory approval is required, on the first day of the first calendar quarter seventy-two (72) months following NERC Board of Trustees adoption or as otherwise made effective pursuant to the laws applicable to such ERO governmental authorities.
- The entity shall be 100% compliant with PRC-005-2 on the first day of the first calendar quarter eighty-four (84) months following applicable regulatory approval, or in those jurisdictions where no regulatory approval is required, on the first day of the first calendar quarter ninety-six (96) months following NERC Board of Trustees adoption or as otherwise made effective pursuant to the laws applicable to such ERO governmental authorities.

5. For Protection System component maintenance activities with maximum allowable intervals of twelve (12) calendar years, as established in Tables 1-1 through 1-5, Table 2, and Table 3:

- The entity shall be at least 30% compliant with PRC-005-2 on the first day of the first calendar quarter sixty (60) months following applicable regulatory approval, or in those jurisdictions where no regulatory approval is required, on the first day of the first calendar quarter seventy-two (72) months following NERC Board of Trustees adoption or as otherwise made effective pursuant to the laws applicable to such ERO governmental authorities.
- The entity shall be at least 60% compliant with PRC-005-2 on the first day of the first calendar quarter following one hundred eight (108) months following applicable regulatory approval, or in those jurisdictions where no regulatory approval is required, on the first day of the first calendar quarter one hundred twenty (120) months following NERC Board of Trustees adoption or as otherwise made effective pursuant to the laws applicable to such ERO governmental authorities.

- The entity shall be 100% compliant with PRC-005-2 on the first day of the first calendar quarter one hundred fifty-six (156) months following applicable regulatory approval, or in those jurisdictions where no regulatory approval is required, on the first day of the first calendar quarter one hundred sixty-eight (168) months following NERC Board of Trustees adoption or as otherwise made effective pursuant to the laws applicable to such ERO governmental authorities.

Applicability:
This standard applies to the following functional entities:

- Transmission Owner
- Generator Owner
- Distribution Provider

The new proposed definition of Protection System reads as follows:

Protection System:

- Protective relays which respond to electrical quantities,
- Communications systems necessary for correct operation of protective functions,
- Voltage and current sensing devices providing inputs to protective relays,
- Station dc supply, and
- Control circuitry associated with protective functions through the trip coil(s) of the circuit breakers or other interrupting devices.

IEEE Stationary Battery Committee

NERC Task Force Report

Part of IEEE Power & Energy Society

March 23, 2012

At the most recent meeting of the IEEE Battery Standards Committee Meeting in January of this year concerns were registered over statements contained in the proposed NERC Document PRC-005-2 Protection System Maintenance.

As a result of these concerns, a special task force (herein referred to as ***the task force***) was formed to study the details of PRC-005-2 as it relates to stationary batteries. This task force is composed of a number of members who are recognized representatives of battery manufacturers, battery charger manufacturers, ohmic measurement and battery monitoring equipment manufacturers, battery testing companies and functional entities (nuclear, power generation and substation).

We recognize that the document is intended to address reliability issues for protection and control circuits for the Bulk Electric System [BES], but because of the integral role played by the stationary batteries, they have been included under the expanded scope of the DC power supply section.

If we understand the objective of the PRC document, it is to lay out a baseline standard that ensures that all components identified within the scope of the standard are capable of performing as expected in a worst case condition and verified by periodic maintenance that includes testing and/or measurements as defined for batteries in Tables 1-4(a) through 1-4(f).

A common thread is that the functional entity employing this Protection System Maintenance Program (PSMP) “verifies” that the functional components (in this case, the battery) “can perform as designed.” This is confirmed by the wording at the end of the section describing maintenance activities for the VLA wet cell in Table 1-4(a), the VRLA “sealed” cell in Table 1-4(b) and the Nickel Cadmium cell in Table 1-4(c).

If we read the document correctly, there seems to be an implication that ohmic measurements can act as an alternative to capacity testing to determine that the battery will “perform as designed.” It appears that support for this position is confirmed in the *Supplementary Reference and FAQ* where on pages 80 and 81 discussion is made with respect to “two acceptable methods for proving that a station lead acid battery can perform as designed.”

Reference is made to EPRI technical reports and application guides and certain IEEE battery standards. The IEEE Battery Standard Committee Guidelines of 450 (VLA), 1188 (VRLA) and 1106 (Ni-Cd) are referenced specifically. The specific EPRI technical reports are not referenced in Section 15.4; however, one of the most widely referenced EPRI documents is 1002925 for "Stationary Battery Monitoring by Internal Ohmic Measurements." It is the foundational basis for a paper given by Eddie Davis and Dan Funk of the Edan Engineering Corporation and Wayne Johnson of EPRI at the Battcon 2002 conference.

In the EPRI document under Section 13.4 on page 13-6 the conclusion is given: *"Internal ohmic measurements have the ability to identify degradation in individual cells. Although the internal ohmic measurements can identify low capacity cells (which is certainly valuable), the technology does not precisely predict overall battery capacity. Important backup power applications should still be confirmed by periodic battery capacity tests."*

In the concluding remarks of the 2002 Battcon paper, the statement is fortified: *"This does not really imply a shortcoming of internal ohmic measurement technology, but it does mean that we will likely be limited to identifying good or bad cells rather than making claims that a certain internal resistance indicates a particular cell capacity."*

In addition to the EPRI report and the Battcon paper there are several other papers that have been written on ohmic measurement testing. All draw the same conclusion. Several leading US and European battery manufacturers have weighed in on the subject through white papers and/or operating instructions. Four examples are given below:

> *"Ohmic measurements are not a substitute for capacity testing and should not be used to predict absolute capacity values"* – EnerSys white paper entitled "Ohmic Measurements as a Maintenance Tool for Lead Acid Stationary Cells."
>
> *"In summary, internal ohmic testing can be a valuable tool to assist in diagnosing batteries, but it is important to understand what the measurement value represents and know the limitations. . . . . The only surefire way to tell the battery's true health and whether or not the batteries will provide sufficient capacity to fully support the system load is through a measured capacity discharge test."* – C&D Technologies white paper entitled *"Impedance (Conductance) Readings," 2009.*
>
> *"Responsible ohmic device manufacturers acknowledge that there is no direct relationship between percent ohmic change from baseline and battery capacity"* – GNB Installation and Operating Instructions for ABSOLYTE GP Batteries, 2010.

Right now the current state of technology of ohmic testing has significant value in monitoring the trend of changes within individual cells or continuity in a battery string. But if performance or capacity has to be verified, the only true methodology at this point in time is a capacity or performance test." – Hoppecke in a paper entitled "Ohmic Measurements as a Tool for Determining Capacity of a Stationary Lead-Acid Battery," 2012.

In conclusion, ***the task force*** wishes to make the following points and recommendations:

1. ***The task force*** in no way wants to instruct the NERC PRC 005 Standard Drafting Team (SDT) on how it should write its standard. It would welcome the opportunity of assigning a representative from our membership to participate with the SDT going forward as it relates to appropriate battery testing and maintenance.

2. ***The task force*** recognizes that many functional entities are looking for a way to reduce costs through reduced manual maintenance and testing equipment related expenses. However, economic or risk-management decisions should be based upon just that, i.e. the economic or risk factors; and not justified by the use of unproven or misleading interpretation of data.

3. ***The task force*** believes strongly, and is supported by the vast majority of battery manufacturers and ohmic measurement testers, as well as from papers and the study of the closest correlation testing published to date, that ohmic measurement testing cannot serve as a substitute for capacity testing if the true reliability of the battery is to be measured against the statement that the battery "can perform as designed." Capacity testing is the only way to confirm that the battery will perform as designed.

4. Therefore, to ensure the highest reliability of a stationary battery system, load testing per IEEE guidelines is recommended. We appreciate that there are installations where the economics are such that load testing may not be a viable option. However, the functional entity must recognize that some level of reliability will be sacrificed if other analytical techniques such as ohmic testing are used in lieu of load testing.

5. It is the opinion of ***the task force*** that ohmic testing alone is not sufficient to achieve the required reliability of the BES.

6. We recommend that language to that effect be clearly established in the revised draft of PRC-005-2.

Respectfully,

Bill Cantor	*Chris Searles*
Bill Cantor	Chris Searles
Chair of IEEE Stationary Battery Committee	Chair of IEEE SBC NERC Task Force
TPI Engineering	BAE Batteries USA

Other Task Force Members:

(Signature on File) Jan Reber EnerSys Corporation	*(Signature on File)* James (Jim) McDowall Saft Batteries
(Signature on File) Jason A Wallis EnerSys Corporation	*(Signature on File)* John H Kim C & D Technologies
(Signature on File) Jose Marrero Southern Companies	*(Signature on File)* Larry A Carson C&D Technologies
(Signature on File) Larry Meisner Hoppecke Batteries	*(Signature on File)* Phyllis Archer C&D Technologies
(Signature on File) Rick Tressler Alber Corporation	*(Signature on File)* Paul Hectors Power Shield Limited
(Signature on File) Sal Salgia Exelon Nuclear	*(Signature on File)* Rob Schmitt GNB Industrial Power
(Signature on File) Tom Carpenter Tennessee Valley Authority	*(Signature on File)* Wayne Johnson EPRI
(Signature on File) Yves Lavoie Primax Chargers	

cc:

John B Anderson Excel Energy	Merle Ashton Tri-State G&T
Bob Bentert Florida Power & Light Company	Forest Brock Western Farmers Cooperative
Aaron Feathers Pacific Gas & Electric Company	Sam Francis Oncor Electric Delivery
Carol Gerou Midwest Reliability Organization	Russell C Hardison Tennessee Valley Authority
David Harper NRG Texas Maintenance Services	James M Kinney FirstEnergy Corporation
Mark Lucas ComEd	Kristina Marriott ENOSERV
Al McMeekin NERC	Michael Palusso Southern California Edison
Mark Peterson Great River Energy	John Schecter American Electric Power
William D Shultz Southern Company Generation	Eric A Udren Quanta Technology
Scott Vaughn City of Roseville Electric Department	Matthew Westrich American Transmission Company
Phillip B Winston Southern Company Transmission	David Youngblood Luminant Power
John A Zipp ITC Holdings	

Stationary Battery Committee

http://www.ewh.ieee.org/cmte/PES-SBC/

March 27, 2012

Dear Mr. McMeekin,

As chair of the IEEE Stationary Battery Committee, I was approached by several committee members concerning the battery testing and maintenance recommendations in the proposed NERC Document PRC-005-2. There was a consensus in the committee that the aforementioned recommendations did not reflect the best practices in the industry.

In the January Stationary Battery Committee meeting, a task force was formed and approved to review the NERC proposed recommendations. The report from this task force is attached to this letter.

Please note that this task force included some of the committee's most knowledgeable members, including present and past committee chairs, working group chairs, battery and ohmic measurement equipment manufacturers, and an EPRI battery expert who was a principal on the EPRI study regarding ohmic measurements and capacity, as well as many long-time contributors to our standards. The report represents the unanimous agreement of the Task Force.

We trust that this communication will receive the important consideration by you and the NERC SDT that we feel it deserves. We plan to have a few representatives attend your upcoming meeting in Ft. Worth in April. Please feel free to contact me in the meantime if I can provide any additional insight or assistance.

Sincerely,

William P. Cantor

William Cantor
Chair, Stationary Battery Committee
bill.cantor@tpiengineering.com
484-431-7122

Bill Cantor
Chair of IEEE Station Battery Committee

Dear Mr. Cantor:

The NERC Protection System Maintenance and Testing Standard Drafting Team (PSMTSDT) for NERC Project 2007-17 (PRC-005-2) appreciates your remarks and the comments of the IEEE Stationary Battery Committee Task Force regarding its review of the battery maintenance activities described in the latest versions of PRC-005-2 and its supporting Supplementary Reference and FAQ document.

Your comments and those of the IEEE Task Force reflect the valid concerns of industry experts relative to language in the Supplementary Reference and FAQ document that, in their opinion, seems to imply that periodically reviewing and trending the results of inter cell/unit ohmic tests is equivalent to periodic performance of capacity tests. Based on this valuable feedback, the PSMTDT has modified the Supplementary Reference document to eliminate this misconception by stating that capacity testing is the only industry approved method of determining the true capacity of lead acid and nickel–cadmium station batteries. In the revised language, the Supplementary Reference further expresses that, while it has been stated in the EPRI reports (EPRI TR-108826 and 1002925) cited by the IEEE task force's report that there is a definite relationship between internal ohmic measurements and cell capacity of lead acid batteries, the PSMTSDT believes that an accurate determination of a battery's exact capacity cannot be attained by measuring its cell's internal ohmic values alone.

However, the PSMTSDT feels that both Maintenance Activities listed in tables 1-4(a) and 1-4(b) for lead acid batteries are appropriate for verifying "that the station battery can perform as designed." The PSMTSDT defines this as the process of determining when the station battery must be replaced or when an individual cell or battery unit must be removed or replaced.

In the mid 1990's, several large and small utilities began developing maintenance and testing programs for Protection System station batteries using a condition based maintenance approach of trending internal ohmic measurements to each station battery cell's baseline value. Battery owners use the data collected from this maintenance activity to determine (1) when a station battery requires a capacity test (instead of performing a capacity test on a predetermined, prescribed interval), (2) when an individual cell or battery unit should be replaced, or (3) based on the analysis of the trended data, if the station battery should be replaced without performing a capacity test.

As noted by a major manufacturer of lead acid batteries that conducted aging tests on various, similar battery products, some of the trending of ohmic readings from testing conducted on some manufacturers batteries "clearly would have resulted in the rejection/replacement of cells well before the end of their useful life…" This battery manufacturer sums up the methodology most experienced users of periodic trending of ohmic measurements apply when determining that the station battery can perform as designed by saying, "users and manufacturers need to use judgment and experience to analyze the data, and then supplement the data with additional measurements – including capacity testing – when deciding whether to replace product in the field."

Since 2006, when NERC standard PRC-005-1 was adopted by the NERC Board of Trustees, those large and small utilities who put into practice the ohmic measurement condition based maintenance and testing programs for Protection System station batteries, have become NERC-registered Transmission Owners, Generation Owners and Distribution Providers subject to the requirements of PRC-005-1. This mandatory and enforceable standard requires those owners to have "a Protection System maintenance and testing program" that "shall include maintenance and testing intervals and their basis" along with "a summary of their maintenance and testing procedures." Through the successful performance of ohmic trending that began in the mid 1990's and over 6 years of applying this method in their maintenance programs required by PRC-005-1, the PSMSDT believes Protection System equipment owners have, effectively, established an acceptable maintenance practice (supported by EPRI technical references) and maximum maintenance interval, for verifying that a station battery can perform as designed.

Historically, Transmission Owners, Generator Owners, and Distribution Providers have not considered the insignificant power requirements of their Protection Systems (several hundred amperes for duration of less than 0.5 seconds and for not more than 10 amperes of continuous protective relay load when the station battery charger is out of service) when sizing batteries used for station dc supply. Instead, these entities have sized their station batteries for other significantly larger dc loads and duty cycles such as those for inverters, heaters, telecommunication equipment, emergency lighting, load profile of emergency bearing oil and seal oil pumps etc. Considering this factor, it would take a loss of battery capacity of well below 50% (which can be easily detected by ohmic trending) for a battery emergency to significantly affect the functioning of Protection System equipment powered from the station battery.

If the primary purpose of the station battery is to provide the instantaneous stored energy of several hundred amperes for extremely short durations (close to the short circuit duration for a station battery) and provide the minimal protective relay power supply load of not greater than 10 amperes whenever the dc station charger is out of service (which is the case for many Transmission Owners), then the minimum activity of evaluating the measured cell/unit internal ohmic values to station battery baseline to verify that the station battery can perform as designed will achieve the reliability purpose of PRC-005-2 and satisfy the risk-management requirements of the Protection System owner.

In contrast to the Transmission Owner battery design function, a Generator Owner's battery likely feeds other critical loads such as DC powered oil pumps, seal oil pumps, and other DC control power loads necessary to safely shutdown a power plant following a loss of AC power. In the case of nuclear plants, these DC loads could include motor operated valves and other loads related to nuclear safety. For the Generator Owner, the design load profile for the battery is a long duration, deep discharge of the battery. While a cell ohmic value trending program might be adequate to prove that the Generator Owners battery could fulfill its Protection System function, the Generator Owner might want to validate the deep discharge capability of the battery by routine periodic capacity testing to prove the battery's adequacy at providing power to those long duration loads critical for plant shutdown. The PSMTSDT believes that this deep discharge battery capacity test approach will prove the battery can meet its function relative to the plant Protection System without also having a trending program for cell ohmic values.

It is the intent of the PSMTSDT to provide Transmission Owners, Generator Owners, and Distribution Providers flexibility to employ testing methods already utilized in their program, and as appropriate for

their facility type, in order to prove their battery's "ability to function as designed." The PSMTSDT agrees with the task force suggestion that entities should implement this flexibility with due consideration of the economic or risk-management decisions associated with choosing which minimum maintenance activity is appropriate for battery systems at their facilities. However, the PSMTSDT also believes entities can achieve the reliability purpose of PRC-005-2 ("to document and implement programs for the maintenance of all Protection Systems affecting the reliability of the BES so that these Protection Systems are kept in working order.") and thereby enhance the reliability of the BES, by using an ohmic value trending program, as described in Tables 1-4(a) and 1-4(b) of the standard, to provide an adequate indicator of battery health.

Again, the PSMTSDT is grateful to the IEEE Stationary Battery Committee's task force for its review of the draft of the NERC standard PRC-005-2 and the accompanying draft Supplementary Reference and FAQ document. The insights of the task force's experts have assisted the Drafting Team in revising statements in the Supplementary Reference. Furthermore, please accept the team's apology for our oversight of leaving the IEEE Stationary Battery Committee off the list of references in our supplemental document. Our goal is to have the proper references attributed within the document that will go to the NERC Board of Trustees for approval.

Please bear in mind that PSMTSDT meetings, as all NERC Drafting Team meetings, are posted on the NERC web site and are always open to guests and observers. The PSMTSDT solicits the active participation of its guests in its meetings. In fact, significant contributions to the development of PRC-005-2 have been made by those who have attended the Drafting Team meetings as guests and observers. In that regard, should you or someone from your membership be interested in coming to any of the PSMTSDT meetings, we would welcome your attendance and participation.

Sincerely

Charles Rogers
Chair – NERC Project 2007-17 Standard Drafting Team – Protection System Maintenance and Testing
Principal Engineer
Consumers Energy
April 13, 2012

Standard Authorization Request Form

Request Date	May 10, 2012

SAR Requester Information	**SAR Type** (*Check a box for each one that applies.*)	
Individual, Group, or Committee Name Protection System Maintenance Standard Drafting Team	☐	New Standard
Primary Contact (if Group or Committee) Charles Rogers	☒	Revision to existing Standard PRC-005-2 – Protection System Maintenance
Company or Group Name Chairman, Protection System Maintenance Standard Drafting Team	☐	Withdrawal of existing Standard
E-mail Charles.Rogers@cmsenergy.com	☐	Project Identified in Reliability Standards Development Plan Project Number and Name: Project 2007-17 Protection System Maintenance and Testing
Telephone 517-788-0027	☒	Modification to NERC Glossary term or addition of new term Protection System

Brief Description of Proposed Standard Modifications/Actions (In three sentences or less, summarize the proposed actions a drafting team will be responsible for implementing.)

The Standard Drafting Team shall modify NERC Standard PRC-005-2 to add reclosing relays to the standard. In order to do so, the definition of Protection System shall be revised to include reclosing relays, the Facilities portion of the Applicability of the Standard shall be revised to describe those reclosing relays that are included within the standard, and appropriate minimum maintenance intervals (with maximum allowable intervals) shall be added to the standard. The Standard Drafting Team shall also make any other changes that are necessary to explicitly address reclosing relays, but shall not make general revisions to the standard, either in content or arrangement.

Need (Explain why the Standard is being developed or modified. Clearly indicate why the actions being proposed are needed for maintaining or improving bulk power system reliability, including an assessment of the reliability and market interface impacts. This is similar to the Purpose statement in a Reliability Standard.)

Reclosing relays are applied to facilitate automatic restoration of system components following a power system fault. While reclosing relays are often applied to benefit customer service, they are also applied to benefit reliability of the Bulk Electric System. The Federal Energy Regulatory Commission, in paragraphs 16-27 of Order No. 758, directed that NERC include reclosing relays that "can affect the reliable operation of the Bulk-Power System" within NERC Standard PRC-005.

Modifying the standard in this fashion will impact Bulk Electric System (BES) reliability by assuring that the reclosing relays that are installed to meet performance goals of approved NERC Standards, as well as those whose improper operation would adversely affect BES reliability, are properly maintained so that they may be expected to perform properly. No market interface impacts are anticipated.

Goals (Describe what must be accomplished in order to meet the above need. This section would become the Requirements in a Reliability Standard.)

The revision to PRC-005-2 will require that the definition of Protection System be revised to add reclosing relays to the components of this definition. The Facilities portion of the Applicability of the Standard must be modified to describe explicitly those reclosing relays that entities are to maintain in accordance with the revised standard. The Tables of minimum maintenance activities and maximum maintenance intervals will require modification to include intervals and activities appropriate for reclosing relays. Finally, the informative Supplementary Reference Document (provided as a technical reference for PRC-005-2) should be modified to provide the rationale for the maintenance activities and intervals within the modified standard, as well as to provide application guidance to industry.

Objectives and/or Potential Future Metrics (Describe what the potential measure or criteria for success may be for determining the successful implementation of this request. Provide ideas for potential metrics to be developed and monitored in the future relative to this request, if any.)

Successful implementation of the modified standard will assure that reclosing relays, when installed to meet performance requirements of other approved NERC standard, will perform as needed for the conditions anticipated by those performance requirements, and that reclosing relays will not mal-perform in a fashion that would cause adverse BES impacts. Future performance metrics could address successful automatic system restoration as anticipated by approved NERC standards, and also address improper attempted automatic system restoration that adversely impacts the BES.

Detailed Description (In three paragraphs or more, provide a detailed description of the proposed actions a drafting team will be responsible for executing so that the team can efficiently implement this request. While you will check applicability boxes on the following page, this description must include proportional identification of to whom the standard should apply among industry participants.)

The drafting team shall:

1. Modify the definition of Protection System to add reclosing relays.
2. Modify the Facilities portion of the Applicability of PRC-005-2 to describe explicitly those reclosing relays that entities are to maintain in accordance with the revised standard.
3. Modify the Tables within PRC-005-2 to include intervals and activities appropriate for reclosing relays, with consideration for the technology of the reclosing relays and for any condition monitoring that may be in place on the relays
4. Modify Table 1-5 of PRC-005-2 to include the control circuitry associated with reclosing relays being addressed.
5. Modify the Measures and Violation Severity Levels as necessary to address the modified requirements.
6. Modify the informative Supplementary Reference Document (provided as a technical reference for PRC-005-2) to provide the rationale for the maintenance activities and intervals within the modified standard, as well as to provide application guidance to industry

OPTIONAL: Technical Analysis Performed to Support Justification (Provide the results of any technical study or analysis performed to justify this request. Alternatively, if deemed necessary, propose a technical study or analysis that should be performed prior to a related standard development project being initiated in response to this request.)

No technical analysis has been performed, nor is any being proposed.

Reliability Functions

The Standard(s) May Apply to the Following Functions *(Check box for each one that applies.)*		
☐	Regional Entity	Conducts the regional activities related to planning and operations, and coordinates activities of Responsible Entities to secure the reliability of the Bulk Electric System within the region and adjacent regions.
☐	Reliability Coordinator	Responsible for the real-time operating reliability of its Reliability Coordinator Area in coordination with its neighboring Reliability Coordinator's wide area view.
☐	Balancing Authority	Integrates resource plans ahead of time, and maintains load-interchange-resource balance within a Balancing Authority Area and supports Interconnection frequency in real time.
☐	Interchange Authority	Ensures communication of interchange transactions for reliability evaluation purposes and coordinates implementation of valid and balanced interchange schedules between Balancing Authority Areas.
☐	Planning Coordinator	Assesses the longer-term reliability of its Planning Coordinator Area.
☐	Resource	Develops a >one year plan for the resource adequacy of its

	Planner	specific loads within a Planning Coordinator area.
☐	Transmission Planner	Develops a >one year plan for the reliability of the interconnected Bulk Electric System within its portion of the Planning Coordinator area.
☐	Transmission Service Provider	Administers the transmission tariff and provides transmission services under applicable transmission service agreements (e.g., the pro forma tariff).
☒	Transmission Owner	Owns and maintains transmission facilities.
☐	Transmission Operator	Ensures the real-time operating reliability of the transmission assets within a Transmission Operator Area.
☒	Distribution Provider	Delivers electrical energy to the End-use customer.
☒	Generator Owner	Owns and maintains generation facilities.
☐	Generator Operator	Operates generation unit(s) to provide real and reactive power.
☐	Purchasing-Selling Entity	Purchases or sells energy, capacity, and necessary reliability-related services as required.
☐	Market Operator	Interface point for reliability functions with commercial functions.
☐	Load-Serving Entity	Secures energy and transmission service (and reliability-related services) to serve the End-use Customer.

Reliability and Market Interface Principles

Applicable Reliability Principles *(Check box for all that apply.)*	
☒	1. Interconnected bulk power systems shall be planned and operated in a coordinated manner to perform reliably under normal and abnormal conditions as defined in the NERC Standards.
☐	2. The frequency and voltage of interconnected bulk power systems shall be controlled within defined limits through the balancing of real and reactive power supply and demand.
☐	3. Information necessary for the planning and operation of interconnected bulk power systems shall be made available to those entities responsible for planning and operating the systems reliably.
☒	4. Plans for emergency operation and system restoration of interconnected bulk power systems shall be developed, coordinated, maintained and implemented.
☒	5. Facilities for communication, monitoring and control shall be provided, used and maintained for the reliability of interconnected bulk power systems.
☐	6. Personnel responsible for planning and operating interconnected bulk power systems shall be trained, qualified, and have the responsibility and authority to implement actions.
☐	7. The security of the interconnected bulk power systems shall be assessed, monitored and maintained on a wide area basis.
☐	8. Bulk power systems shall be protected from malicious physical or cyber attacks.

Does the proposed Standard(s) comply with all of the following Market Interface Principles? *(Select 'yes' or 'no' from the drop-down box.)*
1. A reliability standard shall not give any market participant an unfair competitive advantage. Yes
2. A reliability standard shall neither mandate nor prohibit any specific market structure. Yes
3. A reliability standard shall not preclude market solutions to achieving compliance with that standard. Yes
4. A reliability standard shall not require the public disclosure of commercially sensitive information. All market participants shall have equal opportunity to access commercially non-sensitive information that is required for compliance with reliability standards. Yes

Related Standards

Standard No.	Explanation
NONE	

Related Projects

Project ID and Title	Explanation
NONE	

Regional Variances

Region	Explanation
ERCOT	
FRCC	
MRO	
NPCC	
SERC	
RFC	
SPP	
WECC	

NERC
NORTH AMERICAN ELECTRIC
RELIABILITY CORPORATION

Supplementary Reference and FAQ - Draft

PRC-005-2 Protection System Maintenance

May, 2012

RELIABILITY | ACCOUNTABILITY

3353 Peachtree Road NE
Suite 600, North Tower
Atlanta, GA 30326
404-446-2560 | www.nerc.com

Table of Contents

Table of Contents ii

1. Introduction and Summary 1

2. Need for Verifying Protection System Performance 2

2.1 Existing NERC Standards for Protection System Maintenance and Testing 2

2.2 Protection System Definition 3

2.3 Applicability of New Protection System Maintenance Standards 3

2.3.1 Frequently Asked Questions: 4

2.4 Applicable Relays 6

2.4.1 Frequently Asked Questions: 6

3. Protection Systems Product Generations 8

4. Definitions 10

4.1 Frequently Asked Questions: 10

5. Time-Based Maintenance (TMB) Programs 12

5.1 Maintenance Practices 12

5.1.1 Frequently Asked Questions: 14

5.2 Extending Time-Based Maintenance 15

5.2.1 Frequently Asked Questions: 15

6. Condition-Based Maintenance (CMB) Programs 17

6.1 Frequently Asked Questions: 17

7. Time-Based Versus Condition-Based Maintenance 19

7.1 Frequently Asked Questions: 19

8. Maximum Allowable Verification Intervals 25

8.1 Maintenance Tests 25

8.1.1 Table of Maximum Allowable Verification Intervals 25
8.1.2 Additional Notes for Tables 1-1 through 1-5 and Table 3 27
8.1.3 Frequently Asked Questions: 28
8.2 Retention of Records 33
8.2.1 Frequently Asked Questions: 33
8.3 Basis for Table 1 Intervals 35
8.4 Basis for Extended Maintenance Intervals for Microprocessor Relays 36
9. Performance-Based Maintenance Process 39
9.1 Minimum Sample Size 40
9.2 Frequently Asked Questions: 42
10. Overlapping the Verification of Sections of the Protection System 53
10.1 Frequently Asked Questions: 53
11. Monitoring by Analysis of Fault Records 54
11.1 Frequently Asked Questions: 55
12. Importance of Relay Settings in Maintenance Programs 56
12.1 Frequently Asked Questions: 56
13. Self-Monitoring Capabilities and Limitations 59
13.1 Frequently Asked Questions: 60
14. Notification of Protection System Failures 61
15. Maintenance Activities 62
15.1 Protective Relays (Table 1-1) 62
15.1.1 Frequently Asked Questions: 62
15.2 Voltage & Current Sensing Devices (Table 1-3) 62
15.2.1 Frequently Asked Questions: 64
15.3 Control circuitry associated with protective functions (Table 1-5) 65

15.3.1 Frequently Asked Questions: 67

15.4 Batteries and DC Supplies (Table 1-4) 68

15.4.1 Frequently Asked Questions: 69

15.5 Associated communications equipment (Table 1-2) 82

15.5.1 Frequently Asked Questions: 83

15.6 Alarms (Table 2) 86

15.6.1 Frequently Asked Questions: 86

15.7 Distributed UFLS and UVLS Systems (Table 3) 86

15.7.1 Frequently Asked Questions: 87

15.8 Examples of Evidence of Compliance 88

15.8.1 Frequently Asked Questions: 88

References 89

Figures 91

Figure 1: Typical Transmission System 91

Figure 2: Typical Generation System 92

Figure 1 & 2 Legend – Components of Protection Systems 93

Appendix A 94

Appendix B 97

1. Introduction and Summary

Note: This supplementary reference for PRC-005-2 is neither mandatory nor enforceable.

NERC currently has four Reliability Standards that are mandatory and enforceable in the United States and address various aspects of maintenance and testing of Protection and Control Systems.

These standards are:

PRC-005-1 — Transmission and Generation Protection System Maintenance and Testing

PRC-008-0 — Underfrequency Load Shedding Equipment Maintenance Programs

PRC-011-0 — UVLS System Maintenance and Testing

PRC-017-0 — Special Protection System Maintenance and Testing

While these standards require that applicable entities have a maintenance program for Protection Systems, and that these entities must be able to demonstrate they are carrying out such a program, there are no specifics regarding the technical requirements for Protection System maintenance programs. Furthermore, FERC Order 693 directed additional modifications respective to Protection System maintenance programs. PRC-005-2 combines and replaces PRC-005, PRC-008, PRC-011 and PRC-017.

2. Need for Verifying Protection System Performance

Protective relays have been described as silent sentinels, and do not generally demonstrate their performance until a Fault or other power system problem requires that they operate to protect power system elements, or even the entire Bulk Electric System (BES). Lacking Faults, switching operations or system problems, the Protection Systems may not operate, beyond static operation, for extended periods. A Misoperation - a false operation of a Protection System or a failure of the Protection System to operate, as designed, when needed - can result in equipment damage, personnel hazards, and wide-area Disturbances or unnecessary customer outages. Maintenance or testing programs are used to determine the performance and availability of Protection Systems.

Typically, utilities have tested Protection Systems at fixed time intervals, unless they had some incidental evidence that a particular Protection System was not behaving as expected. Testing practices vary widely across the industry. Testing has included system functionality, calibration of measuring devices, and correctness of settings. Typically, a Protection System must be visited at its installation site and, in many cases, removed from service for this testing.

Fundamentally, a Reliability Standard for Protection System Maintenance and Testing requires the performance of the maintenance activities that are necessary to detect and correct plausible age and service related degradation of the Protection System Components, such that a properly built and commissioned Protection System will continue to function as designed over its service life.

Similarly station batteries, which are an important part of the station dc supply, are not called upon to provide instantaneous dc power to the Protection System until power is required by the Protection System to operate circuit breakers or interrupting devices to clear Faults or to isolate equipment.

2.1 Existing NERC Standards for Protection System Maintenance and Testing

For critical BES protection functions, NERC standards have required that each utility or asset owner define a testing program. The starting point is the existing Standard PRC-005, briefly restated as follows:

Purpose: To document and implement programs for the maintenance of all Protection Systems affecting the reliability of the Bulk Electric System (BES) so that these Protection Systems are kept in working order.

PRC-005-1 is not specific on where the boundaries of the Protection Systems lie. However, the definition of Protection System in the NERC Glossary of Terms used in Reliability Standards indicates what must be included as a minimum.

At the beginning of the project to develop PRC-005-2, the definition of Protection System was:

Protective relays, associated communications Systems, voltage and current sensing devices, station batteries and dc control circuitry.

Applicability: Owners of generation and transmission Protection Systems.

Requirements: The owner shall have a documented maintenance program with test intervals. The owner must keep records showing that the maintenance was performed at the specified intervals.

2.2 Protection System Definition

The most recently approved definition of Protection Systems is:

- Protective relays which respond to electrical quantities,
- communications Systems necessary for correct operation of protective functions,
- voltage and current sensing devices providing inputs to protective relays,
- station dc supply associated with protective functions (including station batteries, battery chargers, and non-battery-based dc supply), and
- control circuitry associated with protective functions through the trip coil(s) of the circuit breakers or other interrupting devices.

2.3 Applicability of New Protection System Maintenance Standards

The BES purpose is to transfer bulk power. The applicability language has been changed from the original PRC-005:

"*...affecting the reliability of the Bulk Electric System (BES)…*"

To the present language:

"*…that are installed for the purpose of detecting Faults on BES Elements (lines, buses, transformers, etc.).*"

The drafting team intends that this standard will follow with any definition of the Bulk Electric System. There should be no ambiguity; if the Element is a BES Element, then the Protection System protecting that Element should then be included within this standard. If there is regional variation to the definition, then there will be a corresponding regional variation to the Protection Systems that fall under this standard.

There is no way for the Standard Drafting Team to know whether a specific 230KV line, 115KV line (even 69KV line), for example, should be included or excluded. Therefore, the team set the clear intent that the standard language should simply be applicable to Protection Systems for BES Elements.

The BES is a NERC defined term that, from time to time, may undergo revisions. Additionally, there may even be regional variations that are allowed in the present and future definitions. See the NERC Glossary of Terms for the present, in-force definition. See the applicable Regional Reliability Organization for any applicable allowed variations.

While this standard will undergo revisions in the future, this standard will not attempt to keep up with revisions to the NERC definition of BES, but, rather, simply make BES Protection Systems applicable.

The Standard is applied to Generator Owners (GO) and Transmission Owners (TO) because GOs and TOs have equipment that is BES equipment. The standard brings in Distribution Providers (DP) because, depending on the station configuration of a particular substation, there may be Protection System equipment installed at a non-transmission voltage level (Distribution

Provider equipment) that is wholly or partially installed to protect the BES. PRC-005-2 would apply to this equipment. An example is Underfrequency Load-shedding, which is frequently applied well down into the distribution system to meet PRC-007-0.

As this standard is intended to replace the existing PRC-005, PRC-008, PRC-011 and PRC-017, those standards are used in the construction of this revision of PRC-005-1. Much of the original intent of those standards was carried forward whenever it was possible to continue the intent without a disagreement with FERC Order 693. For example, the original PRC-008 was constructed quite differently than the original PRC-005. The drafting team agrees with the intent of this and notes that distributed tripping schemes would have to exhibit multiple failures to trip before they would prove to be significant, as opposed to a single failure to trip of, for example, a Transmission Protection System Bus Differential lock-out relay. While many failures of these distribution breakers could add up to be significant, it is also believed that distribution breakers are operated often on just Fault clearing duty; and, therefore, the distribution circuit breakers are operated at least as frequently as stipulated in any requirement in this standard.

Additionally, since this standard will now replace PRC-011, it will be important to make the distinction between under-voltage Protection Systems that protect individual Loads and Protection Systems that are UVLS schemes that protect the BES. Any UVLS scheme that had been applicable under PRC-011 will now be applicable under this revision of PRC-005-1. An example of an Under-Voltage Load-Shedding scheme that is not applicable to this standard is one in which the tripping action was intended to prevent low distribution voltage to a specific Load from a Transmission System that was intact except for the line that was out of service, as opposed to preventing a Cascading outage or Transmission System collapse.

It had been correctly noted that the devices needed for PRC-011 are the very same types of devices needed in PRC-005.

Thus, a standard written for Protection Systems of the BES can easily make the needed requirements for Protection Systems, and replace some other standards at the same time.

2.3.1 Frequently Asked Questions:

What exactly is the BES, or Bulk Electric System?

BES is the abbreviation for Bulk Electric System. BES is a term in the Glossary of Terms used in Reliability Standards, and is not being modified within this draft standard.
NERC's approved definition of Bulk Electric System is:

As defined by the Regional Reliability Organization, the electrical generation resources, transmission lines, Interconnections with neighboring Systems, and associated equipment, generally operated at voltages of 100 kV or higher. Radial transmission facilities serving only Load with one transmission source are generally not included in this definition.

The BES definition is presently undergoing the process of revision.

Each regional entity implements a definition of the Bulk Electric System that is based on this NERC definition; in some cases, supplemented by additional criteria. These regional definitions have been documented and provided to FERC as part of a *June 14, 2007 Informational Filing*.

Why is Distribution Provider included within the Applicable Entities and as a responsible entity within several of the requirements? Wouldn't anyone having relevant facilities be a Transmission Owner?

Depending on the station configuration of a particular substation, there may be Protection System equipment installed at a non-transmission voltage level (Distribution Provider equipment) that is wholly or partially installed to protect the BES. PRC-005-2 would apply to this equipment. An example is Underfrequency Load-shedding, which is frequently applied well down into the distribution system to meet PRC-007-0.

We have an Under Voltage Load-Shedding (UVLS) system in place that prevents one of our distribution substations from supplying extremely low voltage in the case of a specific transmission line outage. The transmission line is part of the BES. Does this mean that our UVLS system falls within this standard?

The situation, as stated, indicates that the tripping action was intended to prevent low distribution voltage to a specific Load from a Transmission System that was intact, except for the line that was out of service, as opposed to preventing Cascading outage or Transmission System collapse.

This standard is not applicable to this UVLS.

We have a UFLS or UVLS scheme that sheds the necessary Load through distribution-side circuit breakers and circuit reclosers. Do the trip-test requirements for circuit breakers apply to our situation?

No. Distributed tripping schemes would have to exhibit multiple failures to trip before they would prove to be significant, as opposed to a single failure to trip of, for example, a Transmission Protection System Bus Differential lock-out relay. While many failures of these distribution breakers could add up to be significant, it is also believed that distribution breakers are operated often on just Fault clearing duty; and, therefore, the distribution circuit breakers are operated at least as frequently as any requirements that might have appeared in this standard.

We have a UFLS scheme that, in some locales, sheds the necessary Load through non-BES circuit breakers and, occasionally, even circuit switchers. Do the trip-test requirements for circuit breakers apply to our situation?

If your "non-BES circuit breaker" has been brought into this standard by the inclusion of UFLS requirements, and otherwise would not have been brought into this standard, then the answer is that there are no trip-test requirements. For these devices that are otherwise non-BES assets, these tripping schemes would have to exhibit multiple failures to trip before they would prove to be as significant as, for example, a single failure to trip of a Transmission Protection System Bus Differential lock-out relay.

2.4 Applicable Relays

The NERC Glossary definition has a Protection System including relays, dc supply, current and voltage sensing devices, dc control circuitry and associated communications circuits. The relays to which this standard applies are those protective relays that respond to electrical quantities and provide a trip output to trip coils, dc control circuitry or associated communications equipment. This definition extends to IEEE Device No. 86 (lockout relay) and IEEE Device No. 94 (tripping or trip-free relay), as these devices are tripping relays that respond to the trip signal of the protective relay that processed the signals from the current and voltage-sensing devices.

Relays that respond to non-electrical inputs or impulses (such as, but not limited to, vibration, pressure, seismic, thermal or gas accumulation) are not included.

2.4.1 Frequently Asked Questions:

Are power circuit reclosers, reclosing relays, closing circuits and auto-restoration schemes covered in this Standard?

No. This standard covers protective relays that use electrical quantity measurements to determine anomalies and to trip a portion of the BES. Reclosers, reclosing relays, closing circuits and auto-restoration schemes are used to cause devices to close, as opposed to electrical-measurement relays and their associated circuits that cause circuit interruption from the BES; such closing devices and schemes are more appropriately covered under other NERC standards. There is one notable exception: Since PRC-017 will be superseded by PRC-005-2, then if a Special Protection System (previously covered by PRC-017) incorporates automatic closing of breakers, then the SPS-related closing devices must be tested accordingly.

I use my protective relays only as sources of metered quantities and breaker status for SCADA and EMS through a substation distributed RTU or data concentrator to the control center. What are the maintenance requirements for the relays?

This standard addresses Protection Systems that are installed for the purpose of detecting Faults on BES Elements (lines, buses, transformers, etc.). Protective relays, providing only the functions mentioned in the question, are not included.

Is a Sudden Pressure Relay an auxiliary tripping relay?

No. IEEE C37.2-2008 assigns the Device No.# 94 to auxiliary tripping relays. Sudden pressure relays are assigned Device No.# 63. Sudden pressure relays are presently excluded from the standard because it does not utilize voltage and/or current measurements to determine anomalies. Devices that use anything other than electrical detection means are excluded. The trip path from a sudden pressure device is a part of the Protection System control circuitry. The sensing Element is omitted from PRC-005-2 testing requirements because the SDT is unaware of industry-recognized testing protocol for the sensing Elements. The SDT believes that Protection Systems that trip (or can trip) the BES should be included. This position is consistent with the currently-approved PRC-005-1a, consistent with the SAR for Project 2007-17, and understands this to be consistent with the position of FERC staff.

My mechanical device does not operate electrically and does not have calibration settings; what maintenance activities apply?

You must conduct a test(s) to verify the integrity of any trip circuit that is a part of a Protection System. This standard does not cover circuit breaker maintenance or transformer maintenance. The standard also does not presently cover testing of devices, such as sudden

pressure relays (63), temperature relays (49), and other relays which respond to mechanical parameters, rather than electrical parameters. There is an expectation that Fault pressure relays and other non-electrically initiated devices may become part of some maintenance standard. This standard presently covers trip paths. It might seem incongruous to test a trip path without a present requirement to test the device; and, thus, be arguably more work for nothing. But one simple test to verify the integrity of such a trip path could be (but is not limited to) a voltage presence test, as a dc voltage monitor might do if it were installed monitoring that same circuit.

The standard specifically mentions auxiliary and lock-out relays. What is an auxiliary tripping relay?

An auxiliary relay, IEEE Device No.# 94, is described in IEEE Standard C37.2-2008 as: "A device that functions to trip a circuit breaker, contactor, or equipment; to permit immediate tripping by other devices; or to prevent immediate reclosing of a circuit interrupter if it should open automatically, even though its closing circuit is maintained closed."

What is a lock-out relay?

A lock-out relay, IEEE Device No.# 86, is described in IEEE Standard C37.2 as: "A device that trips and maintains the associated equipment or devices inoperative until it is reset by an operator, either locally or remotely."

3. Protection Systems Product Generations

The likelihood of failure and the ability to observe the operational state of a critical Protection System both depends on the technological generation of the relays, as well as how long they have been in service. Unlike many other transmission asset groups, protection and control Systems have seen dramatic technological changes spanning several generations. During the past 20 years, major functional advances are primarily due to the introduction of microprocessor technology for power system devices, such as primary measuring relays, monitoring devices, control Systems, and telecommunications equipment.

Modern microprocessor-based relays have six significant traits that impact a maintenance strategy:

- Self monitoring capability - the processors can check themselves, peripheral circuits, and some connected substation inputs and outputs, such as trip coil continuity. Most relay users are aware that these relays have self monitoring, but are not focusing on exactly what internal functions are actually being monitored. As explained further below, every Element critical to the Protection System must be monitored, or else verified periodically.
- Ability to capture Fault records showing how the Protection System responded to a Fault in its zone of protection, or to a nearby Fault for which it is required not to operate.
- Ability to meter currents and voltages, as well as status of connected circuit breakers, continuously during non-Fault times. The relays can compute values, such as MW and MVAR line flows, that are sometimes used for operational purposes, such as SCADA.
- Data communications via ports that provide remote access to all of the results of Protection System monitoring, recording and measurement.
- Ability to trip or close circuit breakers and switches through the Protection System outputs, on command from remote data communications messages, or from relay front panel button requests.
- Construction from electronic components, some of which have shorter technical life or service life than electromechanical components of prior Protection System generations.

There have been significant advances in the technology behind the other Components of Protection Systems. Microprocessors are now a part of battery chargers, associated communications equipment, voltage and current-measuring devices, and even the control circuitry (in the form of software-latches replacing lock-out relays, etc.).

Any Protection System Component can have self-monitoring and alarming capability, not just relays. Because of this technology, extended time intervals can find their way into all Components of the Protection System.

This standard also recognizes the distinct advantage of using advanced technology to justifiably defer or even eliminate traditional maintenance. Just as a hand-held calculator does not require routine testing and calibration, neither does a calculation buried in a microprocessor-based device that results in a “lock-out.” Thus, the software-latch 86 that replaces an electro-

mechanical 86 does not require routine trip testing. Any trip circuitry associated with the "soft 86" would still need applicable verification activities performed, but the actual "86" does not have to be "electrically operated" or even toggled.

4. Definitions

Protection System Maintenance Program (PSMP) — An ongoing program by which Protection System Components are kept in working order and proper operation of malfunctioning Components is restored. A maintenance program for a specific Component includes one or more of the following activities:

- Verify — Determine that the Component is functioning correctly.
- Monitor — Observe the routine in-service operation of the Component.
- Test — Apply signals to a Component to observe functional performance or output behavior, or to diagnose problems.
- Inspect — Detect visible signs of Component failure, reduced performance and degradation.
- Calibrate — Adjust the operating threshold or measurement accuracy of a measuring element to meet the intended performance requirement.

4.1 Frequently Asked Questions:

Why does PRC-005-2 not specifically require maintenance and testing procedures, as reflected in the previous standard, PRC-005-1?

PRC-005-1 does not require detailed maintenance and testing procedures, but instead requires summaries of such procedures, and is not clear on what is actually required. PRC-005-2 requires a documented maintenance program, and is focused on establishing requirements rather than prescribing methodology to meet those requirements. Between the activities identified in the Tables 1-1 through 1-5, Table 2 and Table 3 (collectively the "Tables"), and the various Components of the definition established for a "Protection System Maintenance Program," PRC-005-2 establishes the activities and time basis for a Protection System Maintenance Program to a level of detail not previously required.

Please clarify what is meant by "restore" in the definition of maintenance.

The description of "restore" in the definition of a Protection System Maintenance Program addresses corrective activities necessary to assure that the Component is returned to working order following the discovery of its failure or malfunction. The Maintenance Activities specified in the Tables do not present any requirements related to Restoration; R5 of the standard does require that the entity "shall demonstrate efforts to correct any identified Unresolved Maintenance Issues." Some examples of restoration (or correction of Unresolved Maintenance Issues) include, but are not limited to, replacement of capacitors in distance relays to bring them to working order; replacement of relays, or other Protection System Components, to bring the Protection System to working order; upgrade of electromechanical or solid-state protective relays to microprocessor-based relays following the discovery of failed Components. Restoration, as used in this context, is not to be confused with restoration rules as used in system operations. Maintenance activity necessarily includes both the detection of problems and the repairs needed to eliminate those problems. This standard does not identify all of the Protection System problems that must be detected and eliminated, rather it is the intent of this standard that an entity determines the necessary working order for their various devices, and

keeps them in working order. If an equipment item is repaired or replaced, then the entity can restart the maintenance-time-interval-clock, if desired; however, the replacement of equipment does not remove any documentation requirements that would have been required to verify compliance with time-interval requirements. In other words, do not discard maintenance data that goes to verify your work.

The retention of documentation for new and/or replaced equipment is all about proving that the maintenance intervals had been in compliance. For example, a long-range plan of upgrades might lead an entity to ignore required maintenance; retaining the evidence of prior maintenance that existed before any retirements and upgrades proves compliance with the standard.

Please clarify what is meant by "...demonstrate efforts to correct an Unresolved Maintenance Issue..."; why not measure the completion of the corrective action?

Management of completion of the identified Unresolved Maintenance Issue is a complex topic that falls outside of the scope of this standard. There can be any number of supply, process and management problems that make setting repair deadlines impossible. The SDT specifically chose the phrase "demonstrate efforts to correct" (with guidance from NERC Staff) because of the concern that many more complex Unresolved Maintenance Issues might require greater than the remaining maintenance interval to resolve (and yet still be a "closed-end process"). For example, a problem might be identified on a VRLA battery during a six-month check. In instances such as one that requiring battery replacement as part of the long-term resolution, it is highly unlikely that the battery could be replaced in time to meet the six-calendar-month requirement for this maintenance activity. The SDT does not believe entities should be found in violation of a maintenance program requirement because of the inability to complete a remediation program within the original maintenance interval. The SDT does believe corrective actions should be timely, but concludes it would be impossible to postulate all possible remediation projects; and, therefore, impossible to specify bounding time frames for resolution of all possible Unresolved Maintenance Issues, or what documentation might be sufficient to provide proof that effective corrective action is being undertaken.

5. Time-Based Maintenance (TBM) Programs

Time-based maintenance is the process in which Protection Systems are maintained or verified according to a time schedule. The scheduled program often calls for technicians to travel to the physical site and perform a functional test on Protection System Components. However, some Components of a TBM program may be conducted from a remote location - for example, tripping a circuit breaker by communicating a trip command to a microprocessor relay to determine if the entire Protection System tripping chain is able to operate the breaker. Similarly, all Protection System Components can have the ability to remotely conduct tests, either on-command or routinely; the running of these tests can extend the time interval between hands-on maintenance activities.

5.1 Maintenance Practices

Maintenance and testing programs often incorporate the following types of maintenance practices:

- TBM – time-based maintenance – externally prescribed maximum maintenance or testing intervals are applied for Components or groups of Components. The intervals may have been developed from prior experience or manufacturers' recommendations. The TBM verification interval is based on a variety of factors, including experience of the particular asset owner, collective experiences of several asset owners who are members of a country or regional council, etc. The maintenance intervals are fixed and may range in number of months or in years.

  TBM can include review of recent power system events near the particular terminal. Operating records may verify that some portion of the Protection System has operated correctly since the last test occurred. If specific protection scheme Components have demonstrated correct performance within specifications, the maintenance test time clock can be reset for those Components.

- PBM – Performance-Based Maintenance - intervals are established based on analytical or historical results of TBM failure rates on a statistically significant population of similar Components. Some level of TBM is generally followed. Statistical analyses accompanied by adjustments to maintenance intervals are used to justify continued use of PBM-developed extended intervals when test failures or in-service failures occur infrequently.

- CBM – condition-based maintenance – continuously or frequently reported results from non-disruptive self monitoring of Components demonstrate operational status as those Components remain in service. Whatever is verified by CBM does not require manual testing, but taking advantage of this requires precise technical focus on exactly what parts are included as part of the self diagnostics. While the term "Condition-Based-Maintenance" (CBM) is no longer used within the standard itself, it is important to note that the concepts of CBM are a part of the standard (in the form of extended time intervals through status-monitoring). These extended time intervals are only allowed (in the absence of PBM) if the condition of the device is monitored (CBM). As a consequence of the "monitored-basis-time-intervals" existing within the standard, the

explanatory discussions within this Supplementary Reference concerned with CBM will remain in this reference and are discussed as CBM.

Microprocessor-based Protection System Components that perform continuous self-monitoring verify correct operation of most Components within the device. Self-monitoring capabilities may include battery continuity, float voltages, unintentional grounds, the ac signal inputs to a relay, analog measuring circuits, processors and memory for measurement, protection, and data communications, trip circuit monitoring, and protection or data communications signals (and many, many more measurements). For those conditions, failure of a self-monitoring routine generates an alarm and may inhibit operation to avoid false trips. When internal Components, such as critical output relay contacts, are not equipped with self-monitoring, they can be manually tested. The method of testing may be local or remote, or through inherent performance of the scheme during a system event.

The TBM is the overarching maintenance process of which the other types are subsets. Unlike TBM, PBM intervals are adjusted based on good or bad experiences. The CBM verification intervals can be hours, or even milliseconds between non-disruptive self-monitoring checks within or around Components as they remain in service.

TBM, PBM, and CBM can be combined for individual Components, or within a complete Protection System. The following diagram illustrates the relationship between various types of maintenance practices described in this section. In the Venn diagram, the overlapping regions show the relationship of TBM with PBM historical information and the inherent continuous monitoring offered through CBM.

This figure shows:

- Region 1: The TBM intervals that are increased based on known reported operational condition of individual Components that are monitoring themselves.
- Region 2: The TBM intervals that are adjusted up or down based on results of analysis of maintenance history of statistically significant population of similar products that have been subject to TBM.
- Region 3: Optimal TBM intervals based on regions 1 and 2.

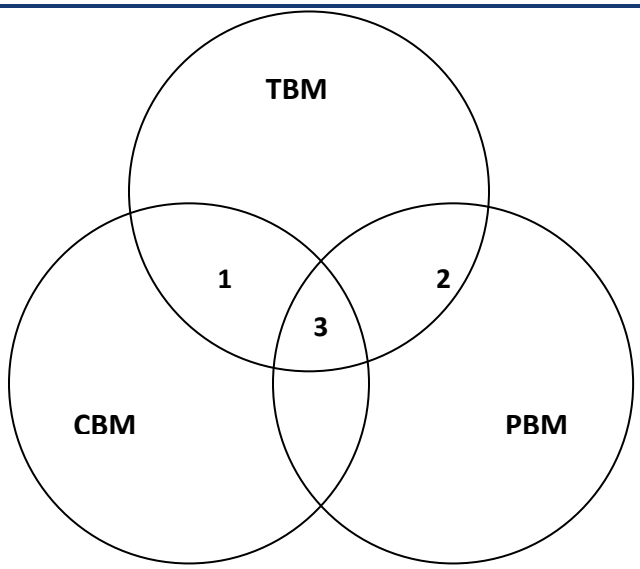

Relationship of time-based maintenance types

5.1.1 Frequently Asked Questions:

The standard seems very complicated, and is difficult to understand. Can it be simplified?

Because the standard is establishing parameters for condition-based Maintenance (R1) and Performance-Based Maintenance (R2), in addition to simple time-based Maintenance, it does appear to be complicated. At its simplest, an entity needs to ONLY perform time-based maintenance according to the unmonitored rows of the Tables. If an entity then wishes to take advantage of monitoring on its Protection System Components and its available lengthened time intervals, then it may, as long as the Component has the listed monitoring attributes. If an entity wishes to use historical performance of its Protection System Components to perform Performance-Based Maintenance, then R2 applies.

Please see the following diagram, which provides a “flow chart” of the standard.

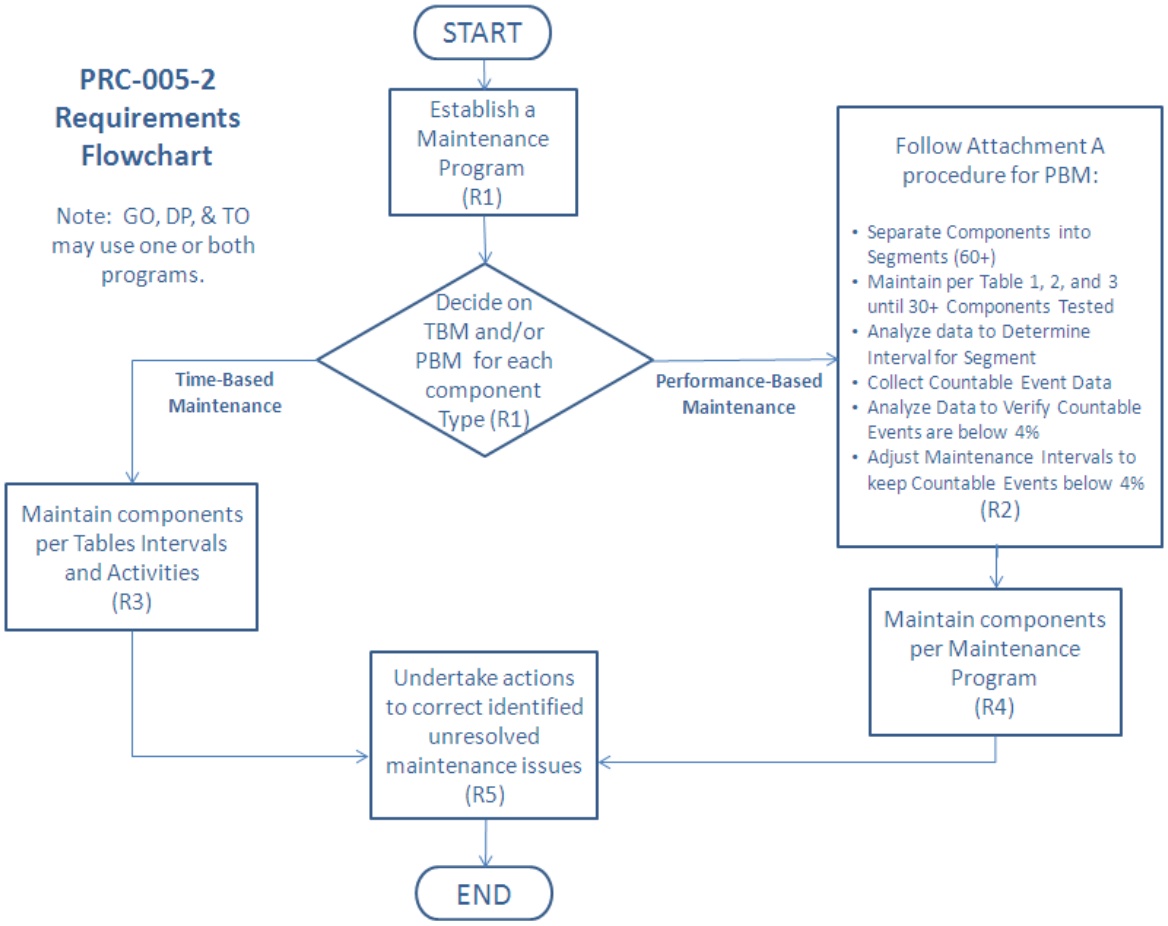

We have an electromechanical (unmonitored) relay that has a trip output to a lockout relay (unmonitored) which trips our transformer off-line by tripping the transformer's high-side and low-side circuit breakers. What testing must be done for this system?

This system is made up of Components that are all unmonitored. Assuming a time-based Protection System maintenance program schedule (as opposed to a Performance-Based maintenance program), each Component must be maintained per the most frequent hands-on activities listed in the Tables.

5.2 Extending Time-Based Maintenance

All maintenance is fundamentally time-based. Default time-based intervals are commonly established to assure proper functioning of each Component of the Protection System, when data on the reliability of the Components is not available other than observations from time-based maintenance. The following factors may influence the established default intervals:

- If continuous indication of the functional condition of a Component is available (from relays or chargers or any self-monitoring device), then the intervals may be extended, or manual testing may be eliminated. This is referred to as condition-based maintenance or CBM. CBM is valid only for precisely the Components subject to monitoring. In the case of microprocessor-based relays, self-monitoring may not include automated diagnostics of every Component within a microprocessor.

- Previous maintenance history for a group of Components of a common type may indicate that the maintenance intervals can be extended, while still achieving the desired level of performance. This is referred to as Performance-Based Maintenance, or PBM. It is also sometimes referred to as reliability-centered maintenance, or RCM; but PBM is used in this document.
- Observed proper operation of a Component may be regarded as a maintenance verification of the respective Component or element in a microprocessor-based device. For such an observation, the maintenance interval may be reset only to the degree that can be verified by data available on the operation. For example, the trip of an electromechanical relay for a Fault verifies the trip contact and trip path, but only through the relays in series that actually operated; one operation of this relay cannot verify correct calibration.

Excessive maintenance can actually decrease the reliability of the Component or system. It is not unusual to cause failure of a Component by removing it from service and restoring it. The improper application of test signals may cause failure of a Component. For example, in electromechanical overcurrent relays, test currents have been known to destroy convolution springs.

In addition, maintenance usually takes the Component out of service, during which time it is not able to perform its function. Cutout switch failures, or failure to restore switch position, commonly lead to protection failures.

5.2.1 Frequently Asked Questions:

If I show the protective device out of service while it is being repaired, then can I add it back as a new protective device when it returns? If not, my relay testing history would show that I was out of compliance for the last maintenance cycle.

The maintenance and testing requirements (R5) (in essence) state "…shall demonstrate efforts to correct any identified Unresolved Maintenance Issues." The type of corrective activity is not stated; however it could include repairs or replacements.

Your documentation requirements will increase, of course, to demonstrate that your device tested bad and had corrective actions initiated. Your regional entity could very well ask for documentation showing status of your corrective actions.

6. Condition-Based Maintenance (CBM) Programs

Condition-based maintenance is the process of gathering and monitoring the information available from modern microprocessor-based relays and other intelligent electronic devices (IEDs) that monitor Protection System Elements. These devices generate monitoring information during normal operation, and the information can be assessed at a convenient location remote from the substation. The information from these relays and IEDs is divided into two basic types:

1. Information can come from background self-monitoring processes, programmed by the manufacturer, or by the user in device logic settings. The results are presented by alarm contacts or points, front panel indications, and by data communications messages.
2. Information can come from event logs, captured files, and/or oscillographic records for Faults and Disturbances, metered values, and binary input status reports. Some of these are available on the device front panel display, but may be available via data communications ports. Large files of Fault information can only be retrieved via data communications. These results comprise a mass of data that must be further analyzed for evidence of the operational condition of the Protection System.

Using these two types of information, the user can develop an effective maintenance program carried out mostly from a central location remote from the substation. This approach offers the following advantages:

1. **Non-invasive Maintenance:** The system is kept in its normal operating state, without human intervention for checking. This reduces risk of damage, or risk of leaving the system in an inoperable state after a manual test. Experience has shown that keeping human hands away from equipment known to be working correctly enhances reliability.
2. **Virtually Continuous Monitoring:** CBM will report many hardware failure problems for repair within seconds or minutes of when they happen. This reduces the percentage of problems that are discovered through incorrect relaying performance. By contrast, a hardware failure discovered by TBM may have been there for much of the time interval between tests, and there is a good chance that some devices will show health problems by incorrect operation before being caught in the next test round. The frequent or continuous nature of CBM makes the effective verification interval far shorter than any required TBM maximum interval.

To use the extended time intervals available through Condition Based Maintenance, simply look for the rows in the Tables that refer to monitored items.

6.1 Frequently Asked Questions:

My microprocessor relays and dc circuit alarms are contained on relay panels in a 24-hour attended control room. Does this qualify as an extended time interval condition-based (monitored) system?

Yes, provided the station attendant (plant operator, etc.) monitors the alarms and other indications (comparable to the monitoring attributes) and reports them within the given time limits that are stated in the criteria of the Tables.

When documenting the basis for inclusion of Components into the appropriate levels of monitoring, as per Requirement R1 (Part 1.4) of the standard, is it necessary to provide this documentation about the device by listing of every Component and the specific monitoring attributes of each device?

No. While maintaining this documentation on the device level would certainly be permissible, it is not necessary. Global statements can be made to document appropriate levels of monitoring for the entire population of a Component type or portion thereof.

For example, it would be permissible to document the conclusion that all BES substation dc supply battery chargers are monitored by stating the following within the program description:

> "All substation dc supply battery chargers are considered monitored and subject to the rows for monitored equipment of Table 1-4 requirements, as all substation dc supply battery chargers are equipped with dc voltage alarms and ground detection alarms that are sent to the manned control center."

Similarly, it would be acceptable to use a combination of a global statement and a device-level list of exclusions. Example:

> "Except as noted below, all substation dc supply battery chargers are considered monitored and subject to the rows for monitored equipment of Table 1-4 requirements, as all substation dc supply battery chargers are equipped with dc voltage alarms and ground detection alarms that are sent to the manned control center. The dc supply battery chargers of Substation X, Substation Y, and Substation Z are considered unmonitored and subject to the rows for unmonitored equipment in Table 1-4 requirements, as they are not equipped with ground detection capability."

Regardless whether this documentation is provided by device listing of monitoring attributes, by global statements of the monitoring attributes of an entire population of Component types, or by some combination of these methods, it should be noted that auditors may request supporting drawings or other documentation necessary to validate the inclusion of the device(s) within the appropriate level of monitoring. This supporting background information need not be maintained within the program document structure, but should be retrievable if requested by an auditor.

7. Time-Based Versus Condition-Based Maintenance

Time-based and condition-based (or monitored) maintenance programs are both acceptable, if implemented according to technically sound requirements. Practical programs can employ a *combination of time-based and condition-based maintenance.* The standard requirements introduce the concept of optionally using condition monitoring as a documented element of a maintenance program.

The Federal Energy Regulatory Commission (FERC), in its Order Number 693 Final Rule, dated March 16, 2007 (18 CFR Part 40, Docket No. RM06-16-000) on Mandatory Reliability Standards for the Bulk-Power System, directed NERC to submit a modification to PRC-005-1 that includes a requirement that maintenance and testing of a Protection System must be carried out within a maximum allowable interval that is appropriate to the type of the Protection System and its impact on the reliability of the Bulk Power System. Accordingly, this Supplementary Reference Paper refers to the specific maximum allowable intervals in PRC-005-2. The defined time limits allow for longer time intervals if the maintained Component is monitored.

A key feature of condition-based monitoring is that it effectively reduces the time delay between the moment of a protection failure and time the Protection System owner knows about it, for the monitored segments of the Protection System. In some cases, the verification is practically continuous - the time interval between verifications is minutes or seconds. Thus, technically sound, condition-based verification, meets the verification requirements of the FERC order even more effectively than the strictly time-based tests of the same system Components.

The result is that:

This NERC standard permits utilities to use a technically sound approach and to take advantage of remote monitoring, data analysis, and control capabilities of modern Protection Systems to reduce the need for periodic site visits and invasive testing of Components by on-site technicians. This periodic testing must be conducted within the maximum time intervals specified in Tables 1-1 through 1-5 and Table 2 of PRC-005-2.

7.1 Frequently Asked Questions:

What is a Calendar Year?

Calendar Year - January 1 through December 31 of any year. As an example, if an event occurred on June 17, 2009 and is on a “One Calendar Year Interval,” the next event would have to occur on or before December 31, 2010.

Please provide an example of “4 Calendar Months”.

If a maintenance activity is described as being needed every four Calendar Months then it is performed in a (given) month and due again four months later. For example a battery bank is inspected in month number 1 then it is due again before the end of the month number5. And specifically consider that you perform your battery inspection on January 3, 2010 then it must be inspected again before the end of May. Another example could be that a four-month inspection was performed in January is due in May, but if performed in March (instead of May)

would still be due four months later therefore the activity is due again July. Basically every "four Calendar Months" means to add four months from the last time the activity was performed.

Please provide an example of the unmonitored versus other levels of monitoring available?

An unmonitored Protection System has no monitoring and alarm circuits on the Protection System Components. A Protection System Component that has monitoring attributes but no alarm output connected is considered to be unmonitored.

A monitored Protection System or an individual monitored Component of a Protection System has monitoring and alarm circuits on the Protection System Components. The alarm circuits must alert, within 24 hours, a location wherein corrective action can be initiated. This location might be, but is not limited to, an Operations Center, Dispatch Office, Maintenance Center or even a portable SCADA system.

There can be a combination of monitored and unmonitored Protection Systems within any given scheme, substation or plant; there can also be a combination of monitored and unmonitored Components within any given Protection System.

Example #1: A combination of monitored and unmonitored Components within a given Protection System might be:

- A microprocessor relay with an internal alarm connected to SCADA to alert 24-hr staffed operations center; it has internal self diagnosis and alarming. (monitored)
- Instrumentation transformers, with no monitoring, connected as inputs to that relay. (unmonitored)
- A vented Lead-Acid battery with a low voltage alarm for the station dc supply voltage and an unintentional grounds detection alarm connected to SCADA. (monitoring varies)
- A circuit breaker with a trip coil, and the trip circuit is not monitored. (unmonitored)

Given the particular Components and conditions, and using Table 1 and Table 2, the particular Components have maximum activity intervals of:

Every four calendar months, inspect:

- Electrolyte level (station dc supply voltage and unintentional ground detection is being maintained more frequently by the monitoring system).

Every 18 calendar months, verify/inspect the following:

- Battery bank ohmic values to station battery baseline (if performance tests are not opted)
- Battery charger float voltage
- Battery rack integrity
- Cell condition of all individual battery cells (where visible)
- Battery continuity
- Battery terminal connection resistance
- Battery cell-to-cell resistance (where available to measure)

Every six calendar years, perform/verify the following:

- Battery performance test (if internal ohmic tests are not opted)
- Verify that each trip coil is able to operate the circuit breaker, interrupting device, or mitigating device
- For electromechanical lock-out relays, electrical operation of electromechanical trip

Every 12 calendar years, verify the following:

- Microprocessor relay settings are as specified
- Operation of the microprocessor's relay inputs and outputs that are essential to proper functioning of the Protection System
- Acceptable measurement of power System input values seen by the microprocessor protective relay
- Verify that current and voltage signal values are provided to the protective relays
- Protection System Component monitoring for the battery system signals are conveyed to a location where corrective action can be initiated
- The microprocessor relay alarm signals are conveyed to a location where corrective action can be initiated
- Verify all trip paths in the control circuitry associated with protective functions through the trip coil(s) of the circuit breakers or other interrupting devices
- Auxiliary outputs that are in the trip path shall be maintained as detailed in Table 1-5 of the standard under the 'Unmonitored Control Circuitry Associated with Protective Functions" section'
- Auxiliary outputs not in a trip path (i.e., annunciation or DME input) are not required, by this standard, to be checked

Example #2: A combination of monitored and unmonitored Components within a given Protection System might be:

- A microprocessor relay with integral alarm that is not connected to SCADA. (unmonitored)
- Current and voltage signal values, with no monitoring, connected as inputs to that relay. (unmonitored)
- A vented lead-acid battery with a low voltage alarm for the station dc supply voltage and an unintentional grounds detection alarm connected to SCADA. (monitoring varies)
- A circuit breaker with a trip coil, with no circuits monitored. (unmonitored)

Given the particular Components and conditions, and using the Table 1 (Maximum Allowable Testing Intervals and Maintenance Activities) and Table 2 (Alarming Paths and Monitoring), the particular Components have maximum activity intervals of:

Every four calendar months, inspect:

- Electrolyte level (station dc supply voltage and unintentional ground detection is being maintained more frequently by the monitoring system)

Every 18 calendar months, verify/inspect the following:

- Battery bank ohmic values to station battery baseline (if performance tests are not opted)
- Battery charger float voltage
- Battery rack integrity
- Cell condition of all individual battery cells (where visible)
- Battery continuity
- Battery terminal connection resistance
- Battery cell-to-cell resistance (where available to measure)

Every six calendar years, verify/perform the following:

- Verify operation of the relay inputs and outputs that are essential to proper functioning of the Protection System
- Verify acceptable measurement of power system input values as seen by the relays
- Verify that each trip coil is able to operate the circuit breaker, interrupting device, or mitigating device
- For electromechanical lock-out relays, electrical operation of electromechanical trip
- Battery performance test (if internal ohmic tests are not opted)

Every 12 calendar years, verify the following:

- Current and voltage signal values are provided to the protective relays
- Protection System Component monitoring for the battery system signals are conveyed to a location where corrective action can be initiated
- All trip paths in the control circuitry associated with protective functions through the trip coil(s) of the circuit breakers or other interrupting devices
- Auxiliary outputs that are in the trip path shall be maintained, as detailed in Table 1-5 of the standard under the Unmonitored Control Circuitry Associated with Protective Functions" section
- Auxiliary outputs not in a trip path (i.e., annunciation or DME input) are not required, by this standard, to be checked

Example #3: A combination of monitored and unmonitored Components within a given Protection System might be:

- A microprocessor relay with alarm connected to SCADA to alert 24-hr staffed operations center; it has internal self diagnosis and alarms. (monitored)
- Current and voltage signal values, with monitoring, connected as inputs to that relay (monitored)
- Vented Lead-Acid battery without any alarms connected to SCADA (unmonitored)

- Circuit breaker with a trip coil, with no circuits monitored (unmonitored)

Given the particular Components, conditions, and using the Table 1 (Maximum Allowable Testing Intervals and Maintenance Activities) and Table 2 (Alarming Paths and Monitoring), the particular Components shall have maximum activity intervals of:

Every four calendar months, verify/inspect the following:

- Station dc supply voltage
- For unintentional grounds
- Electrolyte level

Every 18 calendar months, verify/inspect the following:

- Battery bank ohmic values to station battery baseline (if performance tests are not opted)
- Battery charger float voltage
- Battery rack integrity
- Battery continuity
- Battery terminal connection resistance
- Battery cell-to-cell resistance (where available to measure)
- Condition of all individual battery cells (where visible)

Every six calendar years, perform/verify the following:

- Battery performance test (if internal ohmic tests are not opted)
- Verify that each trip coil is able to operate the circuit breaker, interrupting device, or mitigating device
- For electromechanical lock-out relays, electrical operation of electromechanical trip

Every 12 calendar years, verify the following:

- The microprocessor relay alarm signals are conveyed to a location where corrective action can be taken
- Microprocessor relay settings are as specified
- Operation of the microprocessor's relay inputs and outputs that are essential to proper functioning of the Protection System
- Acceptable measurement of power system input values seen by the microprocessor protective relay
- Verify all trip paths in the control circuitry associated with protective functions through the trip coil(s) of the circuit breakers or other interrupting devices
- Auxiliary outputs that are in the trip path shall be maintained, as detailed in Table 1-5 of the standard under the Unmonitored Control Circuitry Associated with Protective Functions section

- Auxiliary outputs not in a trip path (i.e. annunciation or DME input) are not required, by this standard, to be checked

Why do Components have different maintenance activities and intervals if they are monitored?

The intent behind different activities and intervals for monitored equipment is to allow less frequent manual intervention when more information is known about the condition of Protection System Components. Condition-Based Maintenance is a valuable asset to improve reliability.

Can all Components in a Protection System be monitored?

No. For some Components in a Protection System, monitoring will not be relevant. For example, a battery will always need some kind of inspection.

We have a 30-year-old oil circuit breaker with a red indicating lamp on the substation relay panel that is illuminated only if there is continuity through the breaker trip coil. There is no SCADA monitor or relay monitor of this trip coil. The line protection relay package that trips this circuit breaker is a microprocessor relay that has an integral alarm relay that will assert on a number of conditions that includes a loss of power to the relay. This alarm contact connects to our SCADA system and alerts our 24-hour operations center of relay trouble when the alarm contact closes. This microprocessor relay trips the circuit breaker only and does not monitor trip coil continuity or other things such as trip current. Are the Components monitored or not? How often must I perform maintenance?

The protective relay is monitored and can be maintained every 12 years, or when an Unresolved Maintenance Issue arises. The control circuitry can be maintained every 12 years. The circuit breaker trip coil(s) has to be electrically operated at least once every six years.

8. Maximum Allowable Verification Intervals

The maximum allowable testing intervals and maintenance activities show how CBM with newer device types can reduce the need for many of the tests and site visits that older Protection System Components require. As explained below, there are some sections of the Protection System that monitoring or data analysis may not verify. Verifying these sections of the Protection Systems requires some persistent TBM activity in the maintenance program. However, some of this TBM can be carried out remotely - for example, exercising a circuit breaker through the relay tripping circuits using the relay remote control capabilities can be used to verify function of one tripping path and proper trip coil operation, if there has been no Fault or routine operation to demonstrate performance of relay tripping circuits.

8.1 Maintenance Tests

Periodic maintenance testing is performed to ensure that the protection and control system is operating correctly after a time period of field installation. These tests may be used to ensure that individual Components are still operating within acceptable performance parameters - this type of test is needed for Components susceptible to degraded or changing characteristics due to aging and wear. Full system performance tests may be used to confirm that the total Protection System functions from measurement of power system values, to properly identifying Fault characteristics, to the operation of the interrupting devices.

8.1.1 Table of Maximum Allowable Verification Intervals

Table 1 (collectively known as Table 1, individually called out as Tables 1-1 through 1-5), Table 2 and Table 3 in the standard specify maximum allowable verification intervals for various generations of Protection Systems and categories of equipment that comprise Protection Systems. The right column indicates maintenance activities required for each category.

The types of Components are illustrated in Figures 1 and 2 at the end of this paper. Figure 1 shows an example of telecommunications-assisted transmission Protection System comprising substation equipment at each terminal and a telecommunications channel for relaying between the two substations. Figure 2 shows an example of a generation Protection System. The various sub-Systems of a Protection System that need to be verified are shown.

Non-distributed UFLS, UVLS, and SPS are additional categories of Table 1 that are not illustrated in these figures. Non-distributed UFLS, UVLS and SPS all use identical equipment as Protection Systems in the performance of their functions; and, therefore, have the same maintenance needs.

Distributed UFLS and UVLS Systems, which use local sensing on the distribution system and trip co-located non-BES interrupting devices, are addressed in Table 3 with reduced maintenance activities.

While it is easy to associate protective relays to multiple levels of monitoring, it is also true that most of the Components that can make up a Protection System can also have technological advancements that place them into higher levels of monitoring.

To use the Maintenance Activities and Intervals Tables from PRC-005-2:

- First find the Table associated with your Component. The tables are arranged in the order of mention in the definition of Protection System;

- Table 1-1 is for protective relays,
- Table 1-2 is for the associated communications Systems,
- Table 1-3 is for current and voltage sensing devices,
- Table 1-4 is for station dc supply and
- Table 1-5 is for control circuits.
- Table 2, is for alarms; this was broken out to simplify the other tables.
- Table 3 is for Components which make-up distributed UFLS and UVLS Systems.

- Next look within that table for your device and its degree of monitoring. The Tables have different hands-on maintenance activities prescribed depending upon the degree to which you monitor your equipment. Find the maintenance activity that applies to the monitoring level that you have on your piece of equipment.
- This Maintenance activity is the minimum maintenance activity that must be documented.
- If your Performance-Based Maintenance (PBM) plan requires more activities, then you must perform and document to this higher standard. (Note that this does not apply unless you utilize PBM.)
- After the maintenance activity is known, check the maximum maintenance interval; this time is the maximum time allowed between hands-on maintenance activity cycles of this Component.
- If your Performance-Based Maintenance plan requires activities more often than the Tables maximum, then you must perform and document those activities to your more stringent standard. (Note that this does not apply unless you utilize PBM.)
- Any given Component of a Protection System can be determined to have a degree of monitoring that may be different from another Component within that same Protection System. For example, in a given Protection System it is possible for an entity to have a monitored protective relay and an unmonitored associated communications system; this combination would require hands-on maintenance activity on the relay at least once every 12 years and attention paid to the communications system as often as every four months.
- An entity does not have to utilize the extended time intervals made available by this use of condition-based monitoring. An easy choice to make is to simply utilize the unmonitored level of maintenance made available on each of the five Tables. While the maintenance activities resulting from this choice would require more maintenance man-hours, the maintenance requirements may be simpler to document and the resulting maintenance plans may be easier to create.

For each Protection System Component, Table 1 shows maximum allowable testing intervals for the various degrees of monitoring. These degrees of monitoring, or levels, range from the legacy unmonitored through a system that is more comprehensively monitored.

It has been noted here that an entity may have a PSMP that is more stringent than PRC-005-2. There may be any number of reasons that an entity chooses a more stringent plan than the

minimums prescribed within PRC-005-2, most notable of which is an entity using performance based maintenance methodology. If an entity has a Performance-Based Maintenance program, then that plan must be followed, even if the plan proves to be more stringent than the minimums laid out in the Tables.

8.1.2 Additional Notes for Tables 1-1 through 1-5 and Table 3

1. For electromechanical relays, adjustment is required to bring measurement accuracy within the tolerance needed by the asset owner. Microprocessor relays with no remote monitoring of alarm contacts, etc, are unmonitored relays and need to be verified within the Table interval as other unmonitored relays but may be verified as functional by means other than testing by simulated inputs.

2. Microprocessor relays typically are specified by manufacturers as not requiring calibration, but acceptable measurement of power system input values must be verified (verification of the Analog to Digital [A/D] converters) within the Table intervals. The integrity of the digital inputs and outputs that are used as protective functions must be verified within the Table intervals.

3. Any Phasor Measurement Unit (PMU) function whose output is used in a Protection System or SPS (as opposed to a monitoring task) must be verified as a Component in a Protection System.

4. In addition to verifying the circuitry that supplies dc to the Protection System, the owner must maintain the station dc supply. The most widespread station dc supply is the station battery and charger. Unlike most Protection System Components, physical inspection of station batteries for signs of Component failure, reduced performance, and degradation are required to ensure that the station battery is reliable enough to deliver dc power when required. IEEE Standards 450, 1188, and 1106 for vented lead-acid, valve-regulated lead-acid, and nickel-cadmium batteries, respectively (which are the most commonly used substation batteries on the NERC BES) have been developed as an important reference source of maintenance recommendations. The Protection System owner might use the applicable IEEE recommended practice which contains information and recommendations concerning the maintenance, testing and replacement of its substation battery. However, the methods prescribed in these IEEE recommendations cannot be specifically required because they do not apply to all battery applications.

5. Aggregated small entities might distribute the testing of the population of UFLS/UVLS Systems, and large entities will usually maintain a portion of these Systems in any given year. Additionally, if relatively small quantities of such Systems do not perform properly, it will not affect the integrity of the overall program. Thus, these distributed Systems have decreased requirements as compared to other Protection Systems.

6. Voltage & Current Sensing Device circuit input connections to the Protection System relays can be verified by (but not limited to) comparison of measured values on live circuits or by using test currents and voltages on equipment out of service for maintenance. The verification process can be automated or manual. The values should be verified to be as expected (phase value and phase relationships are both equally important to verify).

7. "End-to-end test," as used in this Supplementary Reference, is any testing procedure that creates a remote input to the local communications-assisted trip scheme. While this can be interpreted as a GPS-type functional test, it is not limited to testing via GPS. Any remote scheme manipulation that can cause action at the local trip path can be used to functionally-test the dc control circuitry. A documented Real-time trip of any given trip path is acceptable in lieu of a functional trip test. It is possible, with sufficient monitoring, to be able to verify each and every parallel trip path that participated in any given dc Control Circuit trip. Or another possible solution is that a single trip path from a single monitored relay can be verified to be the trip path that successfully tripped during a Real-time operation. The variations are only limited by the degree of engineering and monitoring that an entity desires to pursue.
8. A/D verification may use relay front panel value displays, or values gathered via data communications. Groupings of other measurements (such as vector summation of bus feeder currents) can be used for comparison if calibration requirements assure acceptable measurement of power system input values.
9. Notes 1-8 attempt to describe some testing activities; they do not represent the only methods to achieve these activities, but rather some possible methods. Technological advances, ingenuity and/or industry accepted techniques can all be used to satisfy maintenance activity requirements; the standard is technology- and method-neutral in most cases.

8.1.3 Frequently Asked Questions:

What is meant by "Verify that settings are as specified" maintenance activity in Table 1-1?

Verification of settings is an activity directed mostly towards microprocessor- based relays. For relay maintenance departments that choose to test microprocessor-based relays in the same manner as electromechanical relays are tested, the testing process sometimes requires that some specific functions be disabled. Later tests might enable the functions previously disabled, but perhaps still other functions or logic statements were then masked out. It is imperative that, when the relay is placed into service, the settings in the relay be the settings that were intended to be in that relay or as the standard states "…settings are as specified."

Many of the microprocessor- based relays available today have software tools which provide this functionality and generate reports for this purpose.

For evidence or documentation of this requirement, a simple recorded acknowledgement that the settings were checked to be as specified is sufficient.

The drafting team was careful not to require "…that the relay settings be correct…" because it was believed that this might then place a burden of proof that the specified settings would result in the correct intended operation of the interrupting device. While that is a noble intention, the measurable proof of such a requirement is immense. The intent is that settings of the Component be as specified at the conclusion of maintenance activities, whether those settings may have "drifted" since the prior maintenance or whether changes were made as part of the testing process.

Are electromechanical relays included in the "Verify that settings are as specified" maintenance activity in Table 1-1?

Verification of settings is an activity directed towards the application of protection related functions of microprocessor based relays. Electromechanical relays require calibration verification by voltage and/or current injection; and, thus, the settings are verified during calibration activity. In the example of a time-overcurrent relay, a minor deviation in time dial, versus the settings, may be acceptable, as long as the relay calibration is within accepted tolerances at the injected current amplitudes. A major deviation may require further investigation, as it could indicate a problem with the relay or an incorrect relay style for the application.

The verification of phase current and voltage measurements by comparison to other quantities seems reasonable. How, though, can I verify residual or neutral currents, or 3V0 voltages, by comparison, when my system is closely balanced?

Since these inputs are verified at commissioning, maintenance verification requires ensuring that phase quantities are as expected and that 3IO and 3VO quantities appear equal to or close to 0.

These quantities also may be verified by use of oscillographic records for connected microprocessor relays as recorded during system Disturbances. Such records may compare to similar values recorded at other locations by other microprocessor relays for the same event, or compared to expected values (from short circuit studies) for known Fault locations.

What does this Standard require for testing an auxiliary tripping relay?

Table 1 and Table 3 requires that a trip test must verify that the auxiliary tripping relay(s) and/or lockout relay(s) which are directly in a trip path from the protective relay to the interrupting device trip coil operate(s) electrically. Auxiliary outputs not in a trip path (i.e. annunciation or DME input) are not required, by this standard, to be checked.

Do I have to perform a full end-to-end test of a Special Protection System?

No. All portions of the SPS need to be maintained, and the portions must overlap, but the overall SPS does not need to have a single end-to-end test. In other words it may be tested in piecemeal fashion provided all of the pieces are verified.

What about SPS interfaces between different entities or owners?

As in all of the Protection System requirements, SPS segments can be tested individually, thus minimizing the need to accommodate complex maintenance schedules.

What do I have to do if I am using a phasor measurement unit (PMU) as part of a Protection System or Special Protection System?

Any Phasor Measurement Unit (PMU) function whose output is used in a Protection System or Special Protection System (as opposed to a monitoring task) must be verified as a Component in a Protection System.

How do I maintain a Special Protection System or relay sensing for non-distributed UFLS or UVLS Systems?

Since Components of the SPS, UFLS and UVLS are the same types of Components as those in Protection Systems, then these Components should be maintained like similar Components used for other Protection System functions. In many cases the devices for SPS, UFLS and UVLS are also used for other protective functions. The same maintenance activities apply with the

exception that distributed Systems (UFLS and UVLS) have fewer dc supply and control circuitry maintenance activity requirements.

For the testing of the output action, verification may be by breaker tripping, but may be verified in overlapping segments. For example, an SPS that trips a remote circuit breaker might be tested by testing the various parts of the scheme in overlapping segments. Another method is to document the Real-time tripping of an SPS scheme should that occur. Forced trip tests of circuit breakers (etc) that are a part of distributed UFLS or UVLS schemes are not required.

The established maximum allowable intervals do not align well with the scheduled outages for my power plant. Can I extend the maintenance to the next scheduled outage following the established maximum interval?

No. You must complete your maintenance within the established maximum allowable intervals in order to be compliant. You will need to schedule your maintenance during available outages to complete your maintenance as required, even if it means that you may do protective relay maintenance more frequently than the maximum allowable intervals. The maintenance intervals were selected with typical plant outages, among other things, in mind.

If I am unable to complete the maintenance, as required, due to a major natural disaster (hurricane, earthquake, etc.), how will this affect my compliance with this standard?

The Sanction Guidelines of the North American Electric Reliability Corporation, effective January 15, 2008, provides that the Compliance Monitor will consider extenuating circumstances when considering any sanctions.

What if my observed testing results show a high incidence of out-of-tolerance relays; or, even worse, I am experiencing numerous relay Misoperations due to the relays being out-of-tolerance?

The established maximum time intervals are mandatory only as a not-to-exceed limitation. The establishment of a maximum is measurable. But any entity can choose to test some or all of their Protection System Components more frequently (or to express it differently, exceed the minimum requirements of the standard). Particularly if you find that the maximum intervals in the standard do not achieve your expected level of performance, it is understandable that you would maintain the related equipment more frequently. A high incidence of relay Misoperations is in no one's best interest.

We believe that the four-month interval between inspections is unneccessary. Why can we not perform these inspections twice per year?

The Standard Drafting Team, through the comment process, has discovered that routine monthly inspections are not the norm. To align routine station inspections with other important inspections, the four-month interval was chosen. In lieu of station visits, many activities can be accomplished with automated monitoring and alarming.

Our maintenance plan calls for us to perform routine protective relay tests every 3 years. If we are unable to achieve this schedule, but we are able to complete the procedures in less than the maximum time interval ,then are we in or out of compliance?

According to R3, if you have a time-based maintenance program, then you will be in violation of the standard only if you exceed the maximum maintenance intervals prescribed in the Tables.

According to R4, if your device in question is part of a Performance-Based Maintenance program, then you will be in violation of the standard if you fail to meet your PSMP, even if you do not exceed the maximum maintenance intervals prescribed in the Tables. The intervals in the Tables are associated with TBM and CBM; Attachment A is associated with PBM.

Please provide a sample list of devices or Systems that must be verified in a generator, generator step-up transformer, generator connected station service or generator connected excitation transformer to meet the requirements of this maintenance standard.

Examples of typical devices and Systems that may directly trip the generator, or trip through a lockout relay, may include, but are not necessarily limited to:

- Fault protective functions, including distance functions, voltage-restrained overcurrent functions, or voltage-controlled overcurrent functions
- Loss-of-field relays
- Volts-per-hertz relays
- Negative sequence overcurrent relays
- Over voltage and under voltage protection relays
- Stator-ground relays
- Communications-based Protection Systems such as transfer-trip Systems
- Generator differential relays
- Reverse power relays
- Frequency relays
- Out-of-step relays
- Inadvertent energization protection
- Breaker failure protection

For generator step-up, generator-connected station service transformers, or generator connected excitation transformers, operation of any of the following associated protective relays frequently would result in a trip of the generating unit; and, as such, would be included in the program:

- Transformer differential relays
- Neutral overcurrent relay
- Phase overcurrent relays

Relays which trip breakers serving station auxiliary Loads such as pumps, fans, or fuel handling equipment, etc., need not be included in the program, even if the loss of the those Loads could result in a trip of the generating unit. Furthermore, relays which provide protection to secondary unit substation (SUS) or low switchgear transformers and relays protecting other downstream plant electrical distribution system components are not included in the scope of this program, even if a trip of these devices might eventually result in a trip of the generating

unit. For example, a thermal overcurrent trip on the motor of a coal-conveyor belt could eventually lead to the tripping of the generator, but it does not cause the trip.

In the case where a plant does not have a generator connected station service transformer such that it is normally fed from a system connected station service transformer, is it still the drafting team's intent to exclude the Protection Systems for these system connected auxiliary transformers from scope even when the loss of the normal (system connected) station service transformer will result in a trip of a BES generating Facility?

The SDT does not intend that the system-connected station service transformers be included in the Applicability. The generator-connected station service transformers and generator connected excitation transformers are often connected to the generator bus directly without an interposing breaker; thus, the Protection Systems on these transformers will trip the generator as discussed in 4.2.5.1.

What is meant by "verify operation of the relay inputs and outputs that are essential to proper functioning of the Protection System?"

Any input or output (of the relay) that "affects the tripping" of the breaker is included in the scope of I/O of the relay to be verified. By "affects the tripping," one needs to realize that sometimes there are more inputs and outputs than simply the output to the trip coil. Many important protective functions include things like breaker fail initiation, zone timer initiation and sometimes even 52a/b contact inputs are needed for a protective relay to correctly operate.

Each input should be "picked up" or "turned on and off" and verified as changing state by the microprocessor of the relay. Each output should be "operated" or "closed and opened" from the microprocessor of the relay and the output should be verified to change state on the output terminals of the relay. One possible method of testing inputs of these relays is to "jumper" the needed dc voltage to the input and verify that the relay registered the change of state.

Electromechanical lock-out relays (86) (used to convey the tripping current to the trip coils) need to be electrically operated to prove the capability of the device to change state. These tests need to be accomplished at least every six years, unless PBM methodology is applied.

The contacts on the 86 or auxiliary tripping relays (94) that change state to pass on the trip current to a breaker trip coil need only be checked every 12 years with the control circuitry.

What is the difference between a distributed UFLS/UVLS and a non-distributed UFLS/UVLS scheme?

A distributed UFLS or UVLS scheme contains individual relays which make independent Load shed decisions based on applied settings and localized voltage and/or current inputs. A distributed scheme may involve an enable/disable contact in the scheme and still be considered a distributed scheme. A non-distributed UFLS or UVLS scheme involves a system where there is some type of centralized measurement and Load shed decision being made. A non-distributed UFLS/UVLS scheme is considered similar to an SPS scheme and falls under Table 1 for maintenance activities and intervals.

8.2 Retention of Records

PRC-005-1 describes a reporting or auditing cycle of one year and retention of records for three years. However, with a three-year retention cycle, the records of verification for a Protection

System might be discarded before the next verification, leaving no record of what was done if a Misoperation or failure is to be analyzed.

PRC-005-2 corrects this by requiring:

The Transmission Owner, Generator Owner, and Distribution Provider shall each retain documentation of the two most recent performances of each distinct maintenance activity for the Protection System Components, or to the previous scheduled (on-site) audit date, whichever is longer.

This requirement assures that the documentation shows that the interval between maintenance cycles correctly meets the maintenance interval limits. The requirement is actually alerting the industry to documentation requirements already implemented by audit teams. Evidence of compliance bookending the interval shows interval accomplished instead of proving only your planned interval.

The SDT is aware that, in some cases, the retention period could be relatively long. But, the retention of documents simply helps to demonstrate compliance.

8.2.1 Frequently Asked Questions:

Please use a specific example to demonstrate the data retention requirements.

The data retention requirements are intended to allow the availability of maintenance records to demonstrate that the time intervals in your maintenance plan were upheld. For example: "Company A" has a maintenance plan that requires its electromechanical protective relays be tested every three calendar years, with a maximum allowed grace period of an additional 18 months. This entity would be required to maintain its records of maintenance of its last two routine scheduled tests. Thus, its test records would have a latest routine test, as well as its previous routine test. The interval between tests is, therefore, provable to an auditor as being within "Company A's" stated maximum time interval of 4.5 years.

The intent is not to require three test results proving two time intervals, but rather have two test results proving the last interval. The drafting team contends that this minimizes storage requirements, while still having minimum data available to demonstrate compliance with time intervals.

If an entity prefers to utilize Performance-Based Maintenance, then statistical data may well be retained for extended periods to assist with future adjustments in time intervals.

If an equipment item is replaced, then the entity can restart the maintenance-time-interval-clock if desired; however, the replacement of equipment does not remove any documentation requirements that would have been required to verify compliance with time-interval requirements. In other words, do not discard maintenance data that goes to verify your work.

The retention of documentation for new and/or replaced equipment is all about proving that the maintenance intervals had been in compliance. For example, a long-range plan of upgrades might lead an entity to ignore required maintenance; retaining the evidence of prior maintenance that existed before any retirements and upgrades proves compliance with the standard.

What does this Maintenance Standard say about commissioning? Is it necessary to have documentation in your maintenance history of the completion of commission testing?

This standard does not establish requirements for commission testing. Commission testing includes all testing activities necessary to conclude that a Facility has been built in accordance with design. While a thorough commission testing program would include, either directly or indirectly, the verification of all those Protection System attributes addressed by the maintenance activities specified in the Tables of PRC-005-2, verification of the adequacy of initial installation necessitates the performance of testing and inspections that go well beyond these routine maintenance activities. For example, commission testing might set baselines for future tests; perform acceptance tests and/or warranty tests; utilize testing methods that are not generally done routinely like staged-Fault-tests.

However, many of the Protection System attributes which are verified during commission testing are not subject to age related or service related degradation, and need not be re-verified within an ongoing maintenance program. Example – it is not necessary to re-verify correct terminal strip wiring on an ongoing basis.

PRC-005-2 assumes that thorough commission testing was performed prior to a Protection System being placed in service. PRC-005-2 requires performance of maintenance activities that are deemed necessary to detect and correct plausible age and service related degradation of Components, such that a properly built and commission tested Protection System will continue to function as designed over its service life.

It should be noted that commission testing frequently is performed by a different organization than that which is responsible for the ongoing maintenance of the Protection System. Furthermore, the commission testing activities will not necessarily correlate directly with the maintenance activities required by the standard. As such, it is very likely that commission testing records will deviate significantly from maintenance records in both form and content; and, therefore, it is not necessary to maintain commission testing records within the maintenance program documentation.

Notwithstanding the differences in records, an entity would be wise to retain commissioning records to show a maintenance start date. (See below). An entity that requires that their commissioning tests have, at a minimum, the requirements of PRC-005-2 would help that entity prove time interval maximums by setting the initial time clock.

How do you determine the initial due date for maintenance?

The initial due date for maintenance should be based upon when a Protection System was tested. Alternatively, an entity may choose to use the date of completion of the commission testing of the Protection System Component and the system was placed into service as the starting point in determining its first maintenance due dates. Whichever method is chosen, for newly installed Protection Systems the Components should not be placed into service until minimum maintenance activities have taken place.

It is conceivable that there can be a (substantial) difference in time between the date of testing, as compared to the date placed into service. The use of the “Calendar Year” language can help determine the next due date without too much concern about being non-compliant for missing test dates by a small amount (provided your dates are not already at the end of a year). However, if there is a substantial amount of time difference between testing and in-service dates, then the testing date should be followed because it is the degradation of Components that is the concern. While accuracy fluctuations may decrease when Components are not

energized, there are cases when degradation can take place, even though the device is not energized. Minimizing the time between commissioning tests and in-service dates will help.

If I miss two battery inspections four times out of 100 Protection System Components on my transmission system, does that count as 2 percent or 8 percent when counting Violation Severity Level (VSL) for R3?

The entity failed to complete its scheduled program on two of its 100 Protection System Components, which would equate to two percent for application to the VSL Table for Requirement R3. This VSL is written to compare missed Components to total Components. In this case two Components out of 100 were missed, or two percent.

How do I achieve a "grace period" without being out of compliance?

The objective here is to create a time extension within your own PSMP that still does not violate the maximum time intervals stated in the standard. Remember that the maximum time intervals listed in the Tables cannot be extended.

For the purposes of this example, concentrating on just unmonitored protective relays – Table 1-1 specifies a maximum time interval (between the mandated maintenance activities) of six calendar years. Your plan must ensure that your unmonitored relays are tested at least once every six calendar years. You could, within your PSMP, require that your unmonitored relays be tested every four calendar years, with a maximum allowable time extension of 18 calendar months. This allows an entity to have deadlines set for the auto-generation of work orders, but still has the flexibility in scheduling complex work schedules. This also allows for that 18 calendar months to act as a buffer, in effect a grace period within your PSMP, in the event of unforeseen events. You will note that this example of a maintenance plan interval has a planned time of four years; it also has a built-in time extension allowed within the PSMP, and yet does not exceed the maximum time interval allowed by the standard. So while there are no time extensions allowed beyond the standard, an entity can still have substantial flexibility to maintain their Protection System Components.

8.3 Basis for Table 1 Intervals

When developing the original *Protection System Maintenance – A Technical Reference* in 2007, the SPCTF collected all available data from Regional Entities (REs) on time intervals recommended for maintenance and test programs. The recommendations vary widely in categorization of relays, defined maintenance actions, and time intervals, precluding development of intervals by averaging. The SPCTF also reviewed the 2005 Report [2] of the IEEE Power System Relaying Committee Working Group I-17 (Transmission Relay System Performance Comparison). Review of the I-17 report shows data from a small number of utilities, with no company identification or means of investigating the significance of particular results.

To develop a solid current base of practice, the SPCTF surveyed its members regarding their maintenance intervals for electromechanical and microprocessor relays, and asked the members to also provide definitively-known data for other entities. T he survey represented 470 GW of peak Load, or four percent of the NERC peak Load. Maintenance interval averages were compiled by weighting reported intervals according to the size (based on peak Load) of the reporting utility. Thus, the averages more accurately represent practices for the large populations of Protection Systems used across the NERC regions.

The results of this survey with weighted averaging indicate maintenance intervals of five years for electromechanical or solid state relays, and seven years for unmonitored microprocessor relays.

A number of utilities have extended maintenance intervals for microprocessor relays beyond seven years, based on favorable experience with the particular products they have installed. To provide a technical basis for such extension, the SPCTF authors developed a recommendation of 10 years using the Markov modeling approach from [1], as summarized in Section 8.4. The results of this modeling depend on the completeness of self-testing or monitoring. Accordingly, this extended interval is allowed by Table 1, only when such relays are monitored as specified in the attributes of monitoring contained in Tables 1-1 through 1-5 and Table 2. Monitoring is capable of reporting Protection System health issues that are likely to affect performance within the 10 year time interval between verifications.

It is important to note that, according to modeling results, Protection System availability barely changes as the maintenance interval is varied below the 10-year mark. Thus, reducing the maintenance interval does not improve Protection System availability. With the assumptions of the model regarding how maintenance is carried out, reducing the maintenance interval actually degrades Protection System availability.

8.4 Basis for Extended Maintenance Intervals for Microprocessor Relays

Table 1 allows maximum verification intervals that are extended based on monitoring level. The industry has experience with self-monitoring microprocessor relays that leads to the Table 1 value for a monitored relay, as explained in Section 8.3. To develop a basis for the maximum interval for monitored relays in their *Protection System Maintenance – A Technical Reference*, the SPCTF used the methodology of Reference [1], which specifically addresses optimum routine maintenance intervals. The Markov modeling approach of [1] is judged to be valid for the design and typical failure modes of microprocessor relays.

The SPCTF authors ran test cases of the Markov model to calculate two key probability measures:

- Relay Unavailability - the probability that the relay is out of service due to failure or maintenance activity while the power system Element to be protected is in service.
- Abnormal Unavailability - the probability that the relay is out of service due to failure or maintenance activity when a Fault occurs, leading to failure to operate for the Fault.

The parameter in the Markov model that defines self-monitoring capability is ST (for self test). ST = 0 if there is no self-monitoring; ST = 1 for full monitoring. Practical ST values are estimated to range from .75 to .95. The SPCTF simulation runs used constants in the Markov model that were the same as those used in [1] with the following exceptions:

Sn, Normal tripping operations per hour = 21600 (reciprocal of normal Fault clearing time of 10 cycles)

Sb, Backup tripping operations per hour = 4320 (reciprocal of backup Fault clearing time of 50 cycles)

Rc, Protected Component repairs per hour = 0.125 (8 hours to restore the power system)

Rt, Relay routine tests per hour = 0.125 (8 hours to test a Protection System)

Rr, Relay repairs per hour = 0.08333 (12 hours to complete a Protection System repair after failure)

Experimental runs of the model showed low sensitivity of optimum maintenance interval to these parameter adjustments.

The resulting curves for relay unavailability and abnormal unavailability versus maintenance interval showed a broad minimum (optimum maintenance interval) in the vicinity of 10 years – the curve is flat, with no significant change in either unavailability value over the range of 9, 10, or 11 years. This was true even for a relay mean time between Failures (MTBF) of 50 years, much lower than MTBF values typically published for these relays. Also, the Markov modeling indicates that both the relay unavailability and abnormal unavailability actually become higher with more frequent testing. This shows that the time spent on these more frequent tests yields no failure discoveries that approach the negative impact of removing the relays from service and running the tests.

The PSMT SDT discussed the practical need for "time-interval extensions" or "grace periods" to allow for scheduling problems that resulted from any number of business contingencies. The time interval discussions also focused on the need to reflect industry norms surrounding Generator outage frequencies. Finally, it was again noted that FERC Order 693 demanded maximum time intervals. "Maximum time intervals" by their very term negates any "time-interval extension" or "grace periods." To recognize the need to follow industry norms on Generator outage frequencies and accommodate a form of time-interval extension, while still following FERC Order 693, the Standard Drafting Team arrived at a six-year interval for the electromechanical relay, instead of the five-year interval arrived at by the SPCTF. The PSMT SDT has followed the FERC directive for a *maximum* time interval and has determined that no extensions will be allowed. Six years has been set for the maximum time interval between manual maintenance activities. This maximum time interval also works well for maintenance cycles that have been in use in generator plants for decades.

For monitored relays, the PSMT SDT notes that the SPCTF called for 10 years as the interval between maintenance activities. This 10-year interval was chosen, even though there was "…no significant change in unavailability value over the range of 9, 10, or 11 years. This was true even for a relay Mean Time between Failures (MTBF) of 50 years…" The Standard Drafting Team again sought to align maintenance activities with known successful practices and outage schedules. The Standard does not allow extensions on any Component of the Protection System; thus, the maximum allowed interval for these Components has been set to 12 years. Twelve years also fits well into the traditional maintenance cycles of both substations and generator plants.

Also of note is the Table's use of the term "Calendar" in the column for "Maximum Maintenance Interval." The PSMT SDT deemed it necessary to include the term "Calendar" to facilitate annual maintenance planning, scheduling and implementation. This need is the result of known occurrences of system requirements that could cause maintenance schedules to be missed by a few days or weeks. The PSMT SDT chose the term "Calendar" to preclude the need to have schedules be met to the day. An electromechanical protective relay that is maintained in year number one need not be revisited until six years later (year number seven). For example, a relay was maintained April 10, 2008; maintenance would need to be completed no later than December 31, 2014.

Though not a requirement of this standard, to stay in line with many Compliance Enforcement Agencies audit processes an entity should define, within their own PSMP, the entity's use of terms like annual, calendar year, etc. Then, once this is within the PSMP, the entity should abide by their chosen language.

9. Performance-Based Maintenance Process

In lieu of using the Table 1 intervals, a Performance-Based Maintenance process may be used to establish maintenance intervals (*PRC-005 Attachment A Criteria for a Performance-Based Protection System Maintenance Program*). A Performance-Based Maintenance process may justify longer maintenance intervals, or require shorter intervals relative to Table 1. In order to use a Performance-Based Maintenance process, the documented maintenance program must include records of repairs, adjustments, and corrections to covered Protection Systems in order to provide historical justification for intervals, other than those established in Table 1. Furthermore, the asset owner must regularly analyze these records of corrective actions to develop a ranking of causes. Recurrent problems are to be highlighted, and remedial action plans are to be documented to mitigate or eliminate recurrent problems.

Entities with Performance-Based Maintenance track performance of Protection Systems, demonstrate how they analyze findings of performance failures and aberrations, and implement continuous improvement actions. Since no maintenance program can ever guarantee that no malfunction can possibly occur, documentation of a Performance-Based Maintenance program would serve the utility well in explaining to regulators and the public a Misoperation leading to a major System outage event.

A Performance-Based Maintenance program requires auditing processes like those included in widely used industrial quality Systems (such as ***ISO 9001-2000, Quality management Systems — Requirements;*** or applicable parts of the NIST Baldridge National Quality Program). The audits periodically evaluate:

- The completeness of the documented maintenance process
- Organizational knowledge of and adherence to the process
- Performance metrics and documentation of results
- Remediation of issues
- Demonstration of continuous improvement.

In order to opt into a Performance-Based Maintenance (PBM) program, the asset owner must first sort the various Protection System Components into population segments. Any population segment must be comprised of at least 60 individual units; if any asset owner opts for PBM, but does not own 60 units to comprise a population, then that asset owner may combine data from other asset owners until the needed 60 units is aggregated. Each population segment must be composed of a grouping of Protection Systems or Components of a consistent design standard or particular model or type from a single manufacturer and subjected to similar environmental factors. For example: One segment cannot be comprised of both GE & Westinghouse electro-mechanical lock-out relays; likewise, one segment cannot be comprised of 60 GE lock-out relays, 30 of which are in a dirty environment, and the remaining 30 from a clean environment. This PBM process cannot be applied to batteries, but can be applied to all other Components of a Protection System, including (but not limited to) specific battery chargers, instrument transformers, trip coils and/or control circuitry (etc.).

9.1 Minimum Sample Size

Large Sample Size

An assumption that needs to be made when choosing a sample size is "the sampling distribution of the sample mean can be approximated by a normal probability distribution." The Central Limit Theorem states: "In selecting simple random samples of size *n* from a population, the sampling distribution of the sample mean *x* can be approximated by a normal probability distribution as the sample size becomes large." (Essentials of Statistics for Business and Economics, Anderson, Sweeney, Williams, 2003.)

To use the Central Limit Theorem in statistics, the population size should be large. The references below are supplied to help define what is large.

> "… whenever we are using a large simple random sample (rule of thumb: n>=30), the central limit theorem enables us to conclude that the sampling distribution of the sample mean can be approximated by a normal distribution." (Essentials of Statistics for Business and Economics, Anderson, Sweeney, Williams, 2003.)
>
> "If samples of size n, when n>=30, are drawn from any population with a mean *u* and a standard deviation σ, the sampling distribution of sample means approximates a normal distribution. The greater the sample size, the better the approximation." (Elementary Statistics - Picturing the World, Larson, Farber, 2003.)
>
> "The sample size is large (generally n>=30)… (Introduction to Statistics and Data Analysis - Second Edition, Peck, Olson, Devore, 2005.)
>
> "… the normal is often used as an approximation to the *t* distribution in a test of a null hypothesis about the mean of a normally distributed population when the population variance is estimated from a relatively large sample. A sample size exceeding 30 is often given as a minimal size in this connection." (Statistical Analysis for Business Decisions, Peters, Summers, 1968.)

Error of Distribution Formula

Beyond the large sample size discussion above, a sample size requirement can be estimated using the bound on the Error of Distribution Formula when the expected result is of a "Pass/Fail" format and will be between 0 and 1.0.

The Error of Distribution Formula is:

$$B = z\sqrt{\frac{\pi(1-\pi)}{n}}$$

Where:

B = bound on the error of distribution (allowable error)

z = standard error

π = expected failure rate

n = sample size required

Solving for n provides:

$$n = \pi(1-\pi)\left(\frac{z}{B}\right)^2$$

Minimum Population Size to use Performance-Based Program

One entity's population of Components should be large enough to represent a sizeable sample of a vendor's overall population of manufactured devices. For this reason, the following assumptions are made:

B = five percent

z = 1.96 (This equates to a ninety-five percent confidence level)

π = four percent

Using the equation above, n=59.0.

Minimum Sample Size to evaluate Performance-Based Program

The number of Components that should be included in a sample size for evaluation of the appropriate testing interval can be smaller because a lower confidence level is acceptable since the sample testing is repeated or updated annually. For this reason, the following assumptions are made:

B = five percent

z = 1.44 (eighty-five percent confidence level)

π = four percent

Using the equation above, n=31.8.

Recommendation

Based on the above discussion, a sample size should be at least 30 to allow use of the equation mentioned. Using this and the results of the equation, the following numbers are recommended (and required within the standard):

Minimum Population Size to use Performance-Based Maintenance Program = 60

Minimum Sample Size to evaluate Performance-Based Program = 30.

Once the population segment is defined, then maintenance must begin within the intervals as outlined for the device described in the Tables 1-1 through 1-5. Time intervals can be lengthened provided the last year's worth of Components tested (or the last 30 units maintained, whichever is more) had fewer than four percent Countable Events. It is notable that four percent is specifically chosen because an entity with a small population (30 units) would have to adjust its time intervals between maintenance if more than one Countable Event was found to have occurred during the last analysis period. A smaller percentage would require that entity to adjust the time interval between maintenance activities if even one unit is found out of tolerance or causes a Misoperation.

The minimum number of units that can be tested in any given year is five percent of the population. Note that this five percent threshold sets a practical limitation on total length of time between intervals at 20 years.

If at any time the number of Countable Events equals or exceeds four percent of the last year's tested Components (or the last 30 units maintained, whichever is more), then the time period between manual maintenance activities must be decreased. There is a time limit on reaching the decreased time at which the Countable Events is less than four percent; this must be attained within three years.

9.2 Frequently Asked Questions:

I'm a small entity and cannot aggregate a population of Protection System Components to establish a segment required for a Performance-Based Protection System Maintenance Program. How can I utilize that opportunity?

Multiple asset owning entities may aggregate their individually owned populations of individual Protection System Components to create a segment that crosses ownership boundaries. All entities participating in a joint program should have a single documented joint management process, with consistent Protection System Maintenance Programs (practices, maintenance intervals and criteria), for which the multiple owners are individually responsible with respect to the requirements of the Standard. The requirements established for Performance-Based Maintenance must be met for the overall aggregated program on an ongoing basis.

The aggregated population should reflect all factors that affect consistent performance across the population, including any relevant environmental factors such as geography, power-plant vs. substation, and weather conditions.

Can an owner go straight to a Performance-Based Maintenance program schedule, if they have previously gathered records?

Yes. An owner can go to a Performance-Based Maintenance program immediately. The owner will need to comply with the requirements of a Performance-Based Maintenance program as listed in the Standard. Gaps in the data collected will not be allowed; therefore, if an owner finds that a gap exists such that they cannot prove that they have collected the data as required for a Performance-Based Maintenance program then they will need to wait until they can prove compliance.

When establishing a Performance-Based Maintenance program, can I use test data from the device manufacturer, or industry survey results, as results to help establish a basis for my Performance-Based intervals?

No, you must use actual in-service test data for the Components in the segment.

What types of Misoperations or events are not considered Countable Events in the Performance-Based Protection System Maintenance (PBM) Program?

Countable Events are intended to address conditions that are attributed to hardware failure or calibration failure; that is, conditions that reflect deteriorating performance of the Component. These conditions include any condition where the device previously worked properly, then, due to changes within the device, malfunctioned or degraded to the point that re-calibration (to within the entity's tolerance) was required.

For this purpose of tracking hardware issues, human errors resulting in Protection System Misoperations during system installation or maintenance activities are not considered Countable Events. Examples of excluded human errors include relay setting errors, design

errors, wiring errors, inadvertent tripping of devices during testing or installation, and misapplication of Protection System Components. Examples of misapplication of Protection System Components include wrong CT or PT tap position, protective relay function misapplication, and Components not specified correctly for their installation. Obviously, if one is setting up relevant data about hardware failures then human failures should be eliminated from the hardware performance analysis.

One example of human-error is not pertinent data might be in the area of testing "86" lock-out relays (LOR). "Entity A" has two types of LOR's type "X" and type "Y"; they want to move into a performance based maintenance interval. They have 1000 of each type, so the population variables are met. During electrical trip testing of all of their various schemes over the initial six-year interval they find zero type "X" failures, but human error led to tripping a BES Element 100 times; they find 100 type "Y" failures and had an additional 100 human-error caused tripping incidents. In this example the human-error caused Misoperations should not be used to judge the performance of either type of LOR. Analysis of the data might lead "Entity A" to change time intervals. Type "X" LOR can be placed into extended time interval testing because of its low failure rate (zero failures) while Type "Y" would have to be tested more often than every 6 calendar years (100 failures divided by 1000 units exceeds the four percent tolerance level).

Certain types of Protection System Component errors that cause Misoperations are not considered Countable Events. Examples of excluded Component errors include device malfunctions that are correctable by firmware upgrades and design errors that do not impact protection function.

What are some examples of methods of correcting segment perfomance for Performance-Based Maintenance?

There are a number of methods that may be useful for correcting segment performance for mal-performing segments in a Performance-Based Maintenance system. Some examples are listed below.

- The maximum allowable interval, as established by the Performance-Based Maintenance system, can be decreased. This may, however, be slow to correct the performance of the segment.
- Identifiable sub-groups of Components within the established segment, which have been identified to be the mal-performing portion of the segment, can be broken out as an independent segment for target action. Each resulting segment must satisfy the minimum population requirements for a Performance-Based Maintenance program in order to remain within the program.
- Targeted corrective actions can be taken to correct frequently occurring problems. An example would be replacement of capacitors within electromechanical distance relays if bad capacitors were determined to be the cause of the mal-performance.
- Components within the mal-performing segment can be replaced with other Components (electromechanical distance relays with microprocessor relays, for example) to remove the mal-performing segment.

If I find (and correct) a Unresolved Maintenance Issue as a result of a Misoperation investigation (Re: PRC-004), how does this affect my Performance-Based Maintenance program?

If you perform maintenance on a Protection System Component for any reason (including as part of a PRC-004 required Misoperation investigation/corrective action), the actions performed can count as a maintenance activity provided the activities in the relevant Tables have been done, and, if you desire, "reset the clock" on everything you've done. In a Performance-Based Maintenance program, you also need to record the Unresolved Maintenance Issue as a Countable Event within the relevant Component group segment and use it in the analysis to determine your correct Performance-Based Maintenance interval for that Component group. Note that "resetting the clock" should not be construed as interfering with an entity's routine testing schedule because the "clock-reset" would actually make for a decreased time interval by the time the next routine test schedule comes around.

For example a relay scheme, consisting of four relays, is tested on 1-1-11 and the PSMP has a time interval of 3 calendar years with an allowable extension of 1 calendar year. The relay would be due again for routine testing before the end of the year 2015. This mythical relay scheme has a Misoperation on 6-1-12 that points to one of the four relays as bad. Investigation proves a bad relay and a new one is tested and installed in place of the original. This replacement relay actually could be retested before the end of the year 2016 (clock-reset) and not be out of compliance. This requires tracking maintenance by individual relays and is allowed. However, many companies schedule maintenance in other ways like by substation or by circuit breaker or by relay scheme. By these methods of tracking maintenance that "replaced relay" will be retested before the end of the year 2015. This is also acceptable. In no case was a particular relay tested beyond the PSMP of four years max, nor was the 6 year max of the Standard exceeded. The entity can reset the clock if they desire or the entity can continue with original schedules and, in effect, test even more frequently.

Why are batteries excluded from PBM? What about exclusion of batteries from condition based maintenance?

Batteries are the only Element of a Protection System that is a perishable item with a shelf life. As a perishable item batteries require not only a constant float charge to maintain their freshness (charge), but periodic inspection to determine if there are problems associated with their aging process and testing to see if they are maintaining a charge or can still deliver their rated output as required.

Besides being perishable, a second unique feature of a battery that is unlike any other Protection System Element is that a battery uses chemicals, metal alloys, plastics, welds, and bonds that must interact with each other to produce the constant dc source required for Protection Systems, undisturbed by ac system Disturbances.

No type of battery manufactured today for Protection System application is free from problems that can only be detected over time by inspection and test. These problems can arise from variances in the manufacturing process, chemicals and alloys used in the construction of the individual cells, quality of welds and bonds to connect the Components, the plastics used to make batteries and the cell forming process for the individual battery cells.

Other problems that require periodic inspection and testing can result from transportation from the factory to the job site, length of time before a charge is put on the battery, the method of installation, the voltage level and duration of equalize charges, the float voltage level used, and the environment that the battery is installed in.

All of the above mentioned factors and several more not discussed here are beyond the control of the Functional Entities that want to use a Performance-Based Protection System Maintenance (PBM) program. These inherent variances in the aging process of a battery cell make establishment of a designated segment based on manufacturer and type of battery impossible.

The whole point of PBM is that if all variables are isolated then common aging and performance criteria would be the same. However, there are too many variables in the electrochemical process to completely isolate all of the performance-changing criteria.

Similarly, Functional Entities that want to establish a condition-based maintenance program using the highest levels of monitoring, resulting in the least amount of hands-on maintenance activity, cannot completely eliminate some periodic maintenance of the battery used in a station dc supply. Inspection of the battery is required on a Maximum Maintenance Interval listed in the tables due to the aging processes of station batteries. However, higher degrees of monitoring of a battery can eliminate the requirement for some periodic testing and some inspections (see Table 1-4).

Please provide an example of the calculations involved in extending maintenance time intervals using PBM.

Entity has 1000 GE-HEA lock-out relays; this is greater than the minimum sample requirement of 60. They start out testing all of the relays within the prescribed Table requirements (6 year max) by testing the relays every 5 years. The entity's plan is to test 200 units per year; this is greater than the minimum sample size requirement of 30. For the sake of example only the following will show 6 failures per year, reality may well have different numbers of failures every year. PBM requires annual assessment of failures found per units tested. After the first year of tests the entity finds 6 failures in the 200 units tested. 6/200= 3% failure rate. This entity is now allowed to extend the maintenance interval if they choose. The entity chooses to extend the maintenance interval of this population segment out to 10 years. This represents a rate of 100 units tested per year; entity selects 100 units to be tested in the following year. After that year of testing these 100 units the entity again finds 6 failed units. 6/100= 6% failures. This entity has now exceeded the acceptable failure rate for these devices and must accelerate testing of all of the units at a higher rate such that the failure rate is found to be less than four percent per year; the entity has three years to get this failure rate down to four percent or less (per year). In response to the 6% failure rate, the entity decreases the testing interval to 8 years. This means that they will now test 125 units per year (1000/8). The entity has just two years left to get the test rate corrected.

After a year, they again find six failures out of the 125 units tested. 6/125= five percent failures. In response to the five percent failure rate, the entity decreases the testing interval to seven years. This means that they will now test 143 units per year (1000/7). The entity has just one year left to get the test rate corrected. After a year, they again find six failures out of the 143 units tested. 6/143= 4.2% failures.

(Note that the entity has tried five years and they were under the four percent limit and they tried seven years and they were over the four percent limit. They must be back at four percent failures or less in the next year so they might simply elect to go back to five years.)

Instead, in response to the five percent failure rate, the entity decreases the testing interval to six years. This means that they will now test 167 units per year (1000/6). After a year, they

again find six failures out of the 167 units tested. 6/167= 3.6% failures. Entity found that they could maintain the failure rate at no more than four percent failures by maintaining the testing interval at six years or less. Entity chose six-year interval and effectively extended their TBM (five years) program by 20 percent.

A note of practicality is that an entity will probably be in better shape to lengthen the intervals between tests if the failure rate is less than two percent. But the requirements allow for annual adjustments, if the entity desires. As a matter of maintenance management, an ever-changing test rate (units tested/year) may be un-workable.

Note that the "five percent of Components" requirement effectively sets a practical limit of 20 year maximum PBM interval. Also of note is the "3 years" requirement; an entity might arbitrarily extend time intervals from six years to 20 years. In the event that an entity finds a failure rate greater than four percent, then the test rate must be accelerated such that within three years the failure rate must be brought back down to four percent or less.

Here is a table that demonstrates the values discussed:

Year #	Total Population (P)	Test Interval (I)	Units to be Tested (U= P/I)	# of Failures Found (F)	Failure Rate (=F/U)	Decision to Change Interval Yes or No	Interval Chosen
1	1000	5 yrs	200	6	3%	Yes	10 yrs
2	1000	10 yrs	100	6	6%	Yes	8 yrs
3	1000	8 yrs	125	6	5%	Yes	7 yrs
4	1000	7 yrs	143	6	4.2%	Yes	6 yrs
5	1000	6 yrs	167	6	3.6%	No	6 yrs

Please provide an example of the calculations involved in extending maintenance time intervals using PBM for control circuitry.

Note that the following example captures "Control Circuitry" as all of the trip paths associated with a particular trip coil of a circuit breaker. An entity is not restricted to this method of counting control circuits. Perhaps another method an entity would prefer would be to simply track every individual (parallel) trip path. Or perhaps another method would be to track all of the trip outputs from a specific (set) of relays protecting a specific Element. Under the included definition of "Component":

The designation of what constitutes a control circuit Component is very dependent upon how an entity performs and tracks the testing of the control circuitry. Some entities test their control circuits on a breaker basis whereas others test their circuitry on a local zone of protection basis. Thus, entities are allowed the latitude to designate their own definitions of control circuit Components. Another example of where the entity has some discretion on determining what constitutes a single Component is the voltage and current sensing devices, where the entity may choose either to designate a full three-phase set of such devices or a single device as a single Component.

And in Attachment A (PBM) the definition of Segment:

Segment – *Protection Systems or Components of a consistent design standard, or a particular model or type from a single manufacturer that typically share other common Elements. Consistent performance is expected across the entire population of a segment. A segment must contain at least sixty (60) individual Components.*

Example:

Entity has 1,000 circuit breakers, all of which have two trip coils, for a total of 2,000 trip coils; if all circuitry was designed and built with a consistent (internal entity) standard, then this is greater than the minimum sample requirement of 60.

For the sake of further example, the following facts are given:

Half of all relay panels (500) were built 40 years ago by an outside contractor, consisted of asbestos wrapped 600V-insulation panel wiring, and the cables exiting the control house are THHN pulled in conduit direct to exactly half of all of the various circuit breakers. All of the relay panels and cable pulls were built with consistent standards and consistent performance standard expectations within the segment (which is greater than 60). Each relay panel has redundant microprocessor (MPC) relays (retrofitted); each MPC relay supplies an individual trip output to each of the two trip coils of the assigned circuit breaker.

Approximately 35 years ago, the entity developed their own internal construction crew and now builds all of their own relay panels from parts supplied from vendors that meet the entity's specifications, including SIS 600V insulation wiring and copper-sheathed cabling within the direct conduits to circuit breakers. The construction crew uses consistent standards in the construction. This newer segment of their control circuitry population is different than the original segment, consistent (standards, construction and performance expectations) within the new segment and constitutes the remainder of the entity's population (another 500 panels and the cabling to the remaining 500 circuit breakers). Each relay panel has redundant microprocessor (MPC) relays; each MPC relay supplies an individual trip output to each of the two trip coils of the assigned circuit breaker. Every trip path in this newer segment has a device

that monitors the voltage directly across the trip contacts of the MPC relays and alarms via RTU and SCADA to the operations control room. This monitoring device, when not in alarm, demonstrates continuity all the way through the trip coil, cabling and wiring back to the trip contacts of the MPC relay.

The entity is tracking 2,000 trip coils (each consisting of multiple trip paths) in each of these two segments. But half of all of the trip paths are monitored; therefore, the trip paths are continuously tested and the circuit will alarm when there is a failure. These alarms have to be verified every 12 years for correct operation.

The entity now has 1,000 trip coils (and associated trip paths) remaining that they have elected to count as control circuits. The entity has instituted a process that requires the verification of every trip path to each trip coil (one unit), including the electrical activation of the trip coil. (The entity notes that the trip coils will have to be tripped electrically more often than the trip path verification, and is taking care of this activity through other documentation of Real-time Fault operations.)

They start out testing all of the trip coil circuits within the prescribed Table requirements (12-year max) by testing the trip circuits every 10 years. The entity's plan is to test 100 units per year; this is greater than the minimum sample size requirement of 30. For the sake of example only, the following will show three failures per year; reality may well have different numbers of failures every year. PBM requires annual assessment of failures found per units tested. After the first year of tests, the entity finds three failures in the 100 units tested. 3/100= three percent failure rate.

This entity is now allowed to extend the maintenance interval, if they choose. The entity chooses to extend the maintenance interval of this population segment out to 20 years. This represents a rate of 50 units tested per year; entity selects 50 units to be tested in the following year. After that year of testing these 50 units, the entity again finds three failed units. 3/50= six percent failures.

This entity has now exceeded the acceptable failure rate for these devices and must accelerate testing of all of the units at a higher rate, such that the failure rate is found to be less than four percent per year; the entity has three years to get this failure rate down to four percent or less (per year).

In response to the six percent failure rate, the entity decreases the testing interval to 16 years. This means that they will now test 63 units per year (1000/16). The entity has just two years left to get the test rate corrected. After a year, they again find three failures out of the 63 units tested. 3/63= 4.76% failures.

In response to the >four percent failure rate, the entity decreases the testing interval to 14 years. This means that they will now test 72 units per year (1000/14). The entity has just one year left to get the test rate corrected. After a year, they again find three failures out of the 72 units tested. 3/72= 4.2% failures.

(Note that the entity has tried 10 years, and they were under the four percent limit; and they tried 14 years, and they were over the four percent limit. They must be back at four percent failures or less in the next year, so they might simply elect to go back to 10 years.)

Instead, in response to the 4.2% failure rate, the entity decreases the testing interval to 12 years. This means that they will now test 84 units per year (1000/12). After a year, they again find three failures out of the 84 units tested. 3/84= 3.6% failures.

Entity found that they could maintain the failure rate at no more than four percent failures by maintaining the testing interval at 12 years or less. Entity chose 12-year interval, and effectively extended their TBM (10 years) program by 20 percent.

A note of practicality is that an entity will probably be in better shape to lengthen the intervals between tests if the failure rate is less than two percent. But the requirements allow for annual adjustments if the entity desires. As a matter of maintenance management, an ever-changing test rate (units tested / year) may be un-workable.

Note that the "five percent of Components" requirement effectively sets a practical limit of 20-year maximum PBM interval. Also of note is the "3 years" requirement; an entity might arbitrarily extend time intervals from six years to 20 years. In the event that an entity finds a failure rate greater than four percent, then the test rate must be accelerated such that within three years the failure rate must be brought back down to four percent or less.

Here is a table that demonstrates the values discussed:

Year #	Total Population (P)	Test Interval (I)	Units to be Tested (U= P/I)	# of Failures Found (F)	Failure Rate (=F/U)	Decision to Change Interval Yes or No	Interval Chosen
1	1000	10 yrs	100	3	3%	Yes	20 yrs
2	1000	20 yrs	50	3	6%	Yes	16yrs
3	1000	16 yrs	63	3	4.8%	Yes	14 yrs
4	1000	14 yrs	72	3	4.2%	Yes	12 yrs
5	1000	12 yrs	84	3	3.6%	No	12 yrs

Please provide an example of the calculations involved in extending maintenance time intervals using PBM for voltage and current sensing devices.

Note that the following example captures "voltage and current inputs to the protective relays" as all of the various current transformer and potential transformer signals associated with a particular set of relays used for protection of a specific element. This entity calls this set of protective relays a "Relay Scheme." Thus, this entity chooses to count PT and CT signals as a group instead of individually tracking maintenance activities to specific bushing CT's or specific PT's. An entity is not restricted to this method of counting voltage and current devices, signals and paths. Perhaps another method an entity would prefer would be to simply track every individual PT and CT. Note that a generation maintenance group may well select the latter because they may elect to perform routine off-line tests during generator outages, whereas a transmission maintenance group might create a process that utilizes Real-time system values measured at the relays. Under the included definition of "Component":

The designation of what constitutes a control circuit Component is very dependent upon how an entity performs and tracks the testing of the control circuitry. Some entities test their control circuits on a breaker basis whereas others test their circuitry on a local zone of protection basis. Thus, entities are allowed the latitude to designate their own definitions of control circuit Components. Another example of where the entity has some discretion on determining what constitutes a single Component is the voltage and current sensing devices, where the entity may choose either to designate a full three-phase set of such devices or a single device as a single Component.

And in Attachment A (PBM) the definition of Segment:

Segment – *Protection Systems or Components of a consistent design standard, or a particular model or type from a single manufacturer that typically share other common Elements. Consistent performance is expected across the entire population of a segment. A segment must contain at least sixty (60) individual Components.*

Example:

Entity has 2000 "Relay Schemes," all of which have three current signals supplied from bushing CTs, and three voltage signals supplied from substation bus PT's. All cabling and circuitry was designed and built with a consistent (internal entity) standard, and this population is greater than the minimum sample requirement of 60.

For the sake of further example the following facts are given:

Half of all relay schemes (1,000) are supplied with current signals from ANSI STD C800 bushing CTs and voltage signals from PTs built by ACME Electric MFR CO. All of the relay panels and cable pulls were built with consistent standards, and consistent performance standard expectations exist for the consistent wiring, cabling and instrument transformers within the segment (which is greater than 60).

The other half of the entity's relay schemes have MPC relays with additional monitoring built-in that compare DNP values of voltages and currents (or Watts and VARs), as interpreted by the MPC relays and alarm for an entity-accepted tolerance level of accuracy. This newer segment of their "Voltage and Current Sensing" population is different than the original segment, consistent (standards, construction and performance expectations) within the new segment and constitutes the remainder of the entity's population.

The entity is tracking many thousands of voltage and current signals within 2,000 relay schemes (each consisting of multiple voltage and current signals) in each of these two segments. But half of all of the relay schemes voltage and current signals are monitored; therefore, the voltage and current signals are continuously tested and the circuit will alarm when there is a failure; these alarms have to be verified every 12 years for correct operation.

The entity now has 1,000 relay schemes worth of voltage and current signals remaining that they have elected to count within their relay schemes designation. The entity has instituted a process that requires the verification of these voltage and current signals within each relay scheme (one unit).

(Please note - a problem discovered with a current or voltage signal found at the relay could be caused by anything from the relay, all the way to the signal source itself. Having many sources of problems can easily increase failure rates beyond the rate of failures of just one item (for example just PTs). It is the intent of the SDT to minimize failure rates of all of the equipment to an acceptable level; thus, any failure of any item that gets the signal from source to relay is counted. It is for this reason that the SDT chose to set the boundary at the ability of the signal to be delivered all the way to the relay.

The entity will start out measuring all of the relay scheme voltage and currents at the individual relays within the prescribed Table requirements (12 year max) by measuring the voltage and current values every 10 years. The entity's plan is to test 100 units per year; this is greater than the minimum sample size requirement of 30. For the sake of example only, the following will show thre failures per year; reality may well have different numbers of failures every year. PBM requires annual assessment of failures found per units tested. After the first year of tests, the entity finds three failures in the 100 units tested. 3/100= three percent failure rate.

This entity is now allowed to extend the maintenance interval, if they choose. The entity chooses to extend the maintenance interval of this population segment out to 20 years. This represents a rate of 50 units tested per year; entity selects 50 units to be tested in the following year. After that year of testing these 50 units, the entity again finds three failed units. 3/50= six percent failures.

This entity has now exceeded the acceptable failure rate for these devices and must accelerate testing of all of the units at a higher rate, such that the failure rate is found to be less than four percent per year; the entity has three years to get this failure rate down to four percent or less (per year).

In response to the six percent failure rate, the entity decreases the testing interval to 16 years. This means that they will now test 63 units per year (1000/16). The entity has just two years left to get the test rate corrected. After a year, they again find three failures out of the 63 units tested. 3/63= 4.76% failures.

In response to the >four percent failure rate, the entity decreases the testing interval to 14 years. This means that they will now test 72 units per year (1000/14). The entity has just one year left to get the test rate corrected. After a year, they again find three failures out of the 72 units tested. 3/72= 4.2% failures.

(Note that the entity has tried 10 years, and they were under the four percent limit; and they tried 14 years, and they were over the four percent limit. They must be back at four percent failures or less in the next year, so they might simply elect to go back to 10 years.)

Instead, in response to the 4.2% failure rate, the entity decreases the testing interval to 12 years. This means that they will now test 84 units per year (1,000/12). After a year, they again find three failures out of the 84 units tested. 3/84= 3.6% failures.

Entity found that they could maintain the failure rate at no more than four percent failures by maintaining the testing interval at 12 years or less. Entity chose 12-year interval and effectively extended their TBM (10 years) program by 20 percent.

A note of practicality is that an entity will probably be in better shape to lengthen the intervals between tests if the failure rate is less than two percent. But the requirements allow for annual adjustments, if the entity desires. As a matter of maintenance management, an ever-changing test rate (units tested/year) may be un-workable.

Note that the "5% of Components" requirement effectively sets a practical limit of 20-year maximum PBM interval. Also of note is the "3 years" requirement; an entity might arbitrarily extend time intervals from six years to 20 years. In the event that an entity finds a failure rate greater than four percent, then the test rate must be accelerated such that within three years the failure rate must be brought back down to four percent or less.

Here is a table that demonstrates the values discussed:

Year #	Total Population (P)	Test Interval (I)	Units to be Tested (U= P/I)	# of Failures Found (F)	Failure Rate (=F/U)	Decision to Change Interval Yes or No	Interval Chose
1	1000	10 yrs	100	3	3%	Yes	20 yrs
2	1000	20 yrs	50	3	6%	Yes	16yrs
3	1000	16 yrs	63	3	4.8%	Yes	14 yrs
4	1000	14 yrs	72	3	4.2%	Yes	12 yrs
5	1000	12 yrs	84	3	3.6%	No	12 yrs

10. Overlapping the Verification of Sections of the Protection System

Tables 1-1 through 1-5 require that every Protection System Component be periodically verified. One approach, but not the only method, is to test the entire protection scheme as a unit, from the secondary windings of voltage and current sources to breaker tripping. For practical ongoing verification, sections of the Protection System may be tested or monitored individually. The boundaries of the verified sections must overlap to ensure that there are no gaps in the verification. See Appendix A of this Supplementary Reference for additional discussion on this topic.

All of the methodologies expressed within this report may be combined by an entity, as appropriate, to establish and operate a maintenance program. For example, a Protection System may be divided into multiple overlapping sections with a different maintenance methodology for each section:

- Time-based maintenance with appropriate maximum verification intervals for categories of equipment, as given in the Tables 1-1 through 1-5;
- Monitoring as described in Tables 1-1 through 1-5;
- A Performance-Based Maintenance program as described in Section 9 above, or Attachment A of the standard;
- Opportunistic verification using analysis of Fault records, as described in Section 11

10.1 Frequently Asked Questions:

My system has alarms that are gathered once daily through an auto-polling system; this is not really a conventional SCADA system but does it meet the Table 1 requirements for inclusion as a monitored system?

Yes, provided the auto-polling that gathers the alarms reports those alarms to a location where the action can be initiated to correct the Unresolved Maintenance Issue. This location does not have to be the location of the engineer or the technician that will eventually repair the problem, but rather a location where the action can be initiated.

11. Monitoring by Analysis of Fault Records

Many users of microprocessor relays retrieve Fault event records and oscillographic records by data communications after a Fault. They analyze the data closely if there has been an apparent Misoperation, as NERC standards require. Some advanced users have commissioned automatic Fault record processing Systems that gather and archive the data. They search for evidence of Component failures or setting problems hidden behind an operation whose overall outcome seems to be correct. The relay data may be augmented with independently captured Digital Fault Recorder (DFR) data retrieved for the same event.

Fault data analysis comprises a legitimate CBM program that is capable of reducing the need for a manual time-interval based check on Protection Systems whose operations are analyzed. Even electromechanical Protection Systems instrumented with DFR channels may achieve some CBM benefit. The completeness of the verification then depends on the number and variety of Faults in the vicinity of the relay that produce relay response records and the specific data captured.

A typical Fault record will verify particular parts of certain Protection Systems in the vicinity of the Fault. For a given Protection System installation, it may or may not be possible to gather within a reasonable amount of time an ensemble of internal and external Fault records that completely verify the Protection System.

For example, Fault records may verify that the particular relays that tripped are able to trip via the control circuit path that was specifically used to clear that Fault. A relay or DFR record may indicate correct operation of the protection communications channel. Furthermore, other nearby Protection Systems may verify that they restrain from tripping for a Fault just outside their respective zones of protection. The ensemble of internal Fault and nearby external Fault event data can verify major portions of the Protection System, and reset the time clock for the Table 1 testing intervals for the verified Components only.

What can be shown from the records of one operation is very specific and limited. In a panel with multiple relays, only the specific relay(s) whose operation can be observed without ambiguity should be used. Be careful about using Fault response data to verify that settings or calibration are correct. Unless records have been captured for multiple Faults close to either side of a setting boundary, setting or calibration could still be incorrect.

PMU data, much like DME data, can be utilized to prove various Components of the Protection System. Obviously, care must be taken to attribute proof only to the parts of a Protection System that can actually be proven using the PMU or DME data.

If Fault record data is used to show that portions or all of a Protection System have been verified to meet Table 1 requirements, the owner must retain the Fault records used, and the maintenance-related conclusions drawn from this data and used to defer Table 1 tests, for at least the retention time interval given in Section 8.2.

11.1 Frequently Asked Questions:

I use my protective relays for Fault and Disturbance recording, collecting oscillographic records and event records via communications for Fault analysis to meet NERC and DME requirements. What are the maintenance requirements for the relays?

For relays used only as Disturbance Monitoring Equipment, NERC Standard PRC-018-1 R3 & R6 states the maintenance requirements and is being addressed by a standards activity that is revising PRC-002-1 and PRC-018-1. For protective relays "that are designed to provide protection for the BES," this standard applies, even if they also perform DME functions.

12. Importance of Relay Settings in Maintenance Programs

In manual testing programs, many utilities depend on pickup value or zone boundary tests to show that the relays have correct settings and calibration. Microprocessor relays, by contrast, provide the means for continuously monitoring measurement accuracy. Furthermore, the relay digitizes inputs from one set of signals to perform all measurement functions in a single self-monitoring microprocessor system. These relays do not require testing or calibration of each setting.

However, incorrect settings may be a bigger risk with microprocessor relays than with older relays. Some microprocessor relays have hundreds or thousands of settings, many of which are critical to Protection System performance.

Monitoring does not check measuring Element settings. Analysis of Fault records may or may not reveal setting problems. To minimize risk of setting errors after commissioning, the user should enforce strict settings data base management, with reconfirmation (manual or automatic) that the installed settings are correct whenever maintenance activity might have changed them; for background and guidance, see [5] in References.

Table 1 requires that settings must be verified to be as specified. The reason for this requirement is simple: With legacy relays (non-microprocessor protective relays), it is necessary to know the value of the intended setting in order to test, adjust and calibrate the relay. Proving that the relay works per specified setting was the de facto procedure. However, with the advanced microprocessor relays, it is possible to change relay settings for the purpose of verifying specific functions and then neglect to return the settings to the specified values. While there is no specific requirement to maintain a settings management process, there remains a need to verify that the settings left in the relay are the intended, specified settings. This need may manifest itself after any of the following:

- One or more settings are changed for any reason.
- A relay fails and is repaired or replaced with another unit.
- A relay is upgraded with a new firmware version.

12.1 Frequently Asked Questions:

How do I approach testing when I have to upgrade firmware of a microprocessor relay?

The entity should ensure that the relay continues to function properly after implementation of firmware changes. Some entities may have a R&D department that might routinely run acceptance tests on devices with firmware upgrades before allowing the upgrade to be installed. Other entities may rely upon the vigorous testing of the firmware OEM. An entity has the latitude to install devices and/or programming that they believe will perform to their satisfaction. If an entity should choose to perform the maintenance activities specified in the Tables following a firmware upgrade, then they may, if they choose, reset the time clock on that set of maintenance activities so that they would not have to repeat the maintenance on its

regularly scheduled cycle. (However, for simplicity in maintenance schedules, some entities may choose to not reset this time clock; it is merely a suggested option.)

If I upgrade my old relays, then do I have to maintain my previous equipment maintenance documentation?

If an equipment item is repaired or replaced, then the entity can restart the maintenance-activity-time-interval-clock, if desired; however, the replacement of equipment does not remove any documentation requirements. The requirements in the standard are intended to ensure that an entity has a maintenance plan, and that the entity adheres to minimum activities and maximum time intervals. The documentation requirements are intended to help an entity demonstrate compliance. For example, saving the dates and records of the last two maintenance activities is intended to demonstrate compliance with the interval. Therefore, if you upgrade or replace equipment, then you still must maintain the documentation for the previous equipment, thus demonstrating compliance with the time interval requirement prior to the replacement action.

We have a number of installations where we have changed our Protection System Components. Some of the changes were upgrades, but others were simply system rating changes that merely required taking relays "out-of-service". What are our responsibilities when it comes to "out-of-service" devices?

Assuming that your system up-rates, upgrades and overall changes meet any and all other requirements and standards, then the requirements of PRC-005-2 are simple – if the Protection System Component performs a Protection System function, then it must be maintained. If the Component no longer performs Protection System functions, then it does not require maintenance activities under the Tables of PRC-005-2. While many entities might physically remove a Component that is no longer needed, there is no requirement in PRC-005-2 to remove such Component(s). Obviously, prudence would dictate that an "out-of-service" device is truly made inactive. There are no record requirements listed in PRC-005-2 for Protection System Components not used.

While performing relay testing of a protective device on our Bulk Electric System, it was discovered that the protective device being tested was either broken or out of calibration. Does this satisfy the relay testing requirement, even though the protective device tested bad, and may be unable to be placed back into service?

Yes, PRC-005-2 requires entities to perform relay testing on protective devices on a given maintenance cycle interval. By performing this testing, the entity has satisfied PRC-005-2 requirement, although the protective device may be unable to be returned to service under normal calibration adjustments. R5 states:

"R5. Each Transmission Owner, Generator Owner, and Distribution Provider shall demonstrate efforts to correct any identified Unresolved Maintenance Issues."

Also, when a failure occurs in a Protection System, power system security may be comprised, and notification of the failure must be conducted in accordance with relevant NERC standards.

If I show the protective device out of service while it is being repaired, then can I add it back as a new protective device when it returns? If not, my relay testing history would show that I was out of compliance for the last maintenance cycle.

The maintenance and testing requirements (R5) state "…shall demonstrate efforts to correct any identified Unresolved Maintenance Issues..." The type of corrective activity is not stated; however, it could include repairs or replacements.

Your documentation requirements will increase, of course, to demonstrate that your device tested bad and had corrective actions initiated. Your regional entity might ask about the status of your corrective actions.

13. Self-Monitoring Capabilities and Limitations

Microprocessor relay proponents have cited the self-monitoring capabilities of these products for nearly 20 years. Theoretically, any element that is monitored does not need a periodic manual test. A problem today is that the community of manufacturers and users has not created clear documentation of exactly what is and is not monitored. Some unmonitored but critical elements are buried in installed Systems that are described as self-monitoring.

To utilize the extended time intervals allowed by monitoring, the user must document that the monitoring attributes of the device match the minimum requirements listed in the Table 1.

Until users are able to document how all parts of a system which are required for the protective functions are monitored or verified (with help from manufacturers), they must continue with the unmonitored intervals established in Table 1 and Table 3.

Going forward, manufacturers and users can develop mappings of the monitoring within relays, and monitoring coverage by the relay of user circuits connected to the relay terminals.

To enable the use of the most extensive monitoring (and never again have a hands-on maintenance requirement), the manufacturers of the microprocessor-based self-monitoring Components in the Protection System should publish for the user a document or map that shows:

- How all internal Elements of the product are monitored for any failure that could impact Protection System performance.
- Which connected circuits are monitored by checks implemented within the product; how to connect and set the product to assure monitoring of these connected circuits; and what circuits or potential problems are not monitored.

With this information in hand, the user can document monitoring for some or all sections by:

- Presenting or referencing the product manufacturer's documents.
- Explaining in a system design document the mapping of how every Component and circuit that is critical to protection is monitored by the microprocessor product(s) or by other design features.
- Extending the monitoring to include the alarm transmission facilities through which failures are reported within a given time frame to allocate where action can be taken to initiate resolution of the alarm attributed to an Unresolved Maintenance Issue, so that failures of monitoring or alarming Systems also lead to alarms and action.
- Documenting the plans for verification of any unmonitored Components according to the requirements of Table 1 and Table 3.

13.1 Frequently Asked Questions:

I can't figure out how to demonstrate compliance with the requirements for the highest level of monitoring of Protection Systems. Why does this Maintenance Standard describe a maintenance program approach I cannot achieve?

Demonstrating compliance with the requirements for the highest level of monitoring any particular Component of Protection Systems is likely to be very involved, and may include detailed manufacturer documentation of complete internal monitoring within a device, comprehensive design drawing reviews, and other detailed documentation. This standard does not presume to specify what documentation must be developed; only that it must be documented.

There may actually be some equipment available that is capable of meeting these highest levels of monitoring criteria, in which case it may be maintained according to the highest level of monitoring shown on the Tables. However, even if there is no equipment available today that can meet this level of monitoring, the standard establishes the necessary requirements for when such equipment becomes available.

By creating a roadmap for development, this provision makes the standard technology-neutral. The Standard Drafting Team wants to avoid the need to revise the standard in a few years to accommodate technology advances that may be coming to the industry.

14. Notification of Protection System Failures

When a failure occurs in a Protection System, power system security may be compromised, and notification of the failure must be conducted in accordance with relevant NERC standard(s). Knowledge of the failure may impact the system operator's decisions on acceptable Loading conditions.

This formal reporting of the failure and repair status to the system operator by the Protection System owner also encourages the system owner to execute repairs as rapidly as possible. In some cases, a microprocessor relay or carrier set can be replaced in hours; wiring termination failures may be repaired in a similar time frame. On the other hand, a Component in an electromechanical or early-generation electronic relay may be difficult to find and may hold up repair for weeks. In some situations, the owner may have to resort to a temporary protection panel, or complete panel replacement.

15. Maintenance Activities

Some specific maintenance activities are a requirement to ensure reliability. An example would be that a BES entity could be prudent in its protective relay maintenance, but if its battery maintenance program is lacking, then reliability could still suffer. The NERC glossary outlines a Protection System as containing specific Components. PRC-005-2 requires specific maintenance activities be accomplished within a specific time interval. As noted previously, higher technology equipment can contain integral monitoring capability that actually performs maintenance verification activities routinely and often; therefore, *manual intervention* to perform certain activities on these type Components may not be needed.

15.1 Protective Relays (Table 1-1)

These relays are defined as the devices that receive the input signal from the current and voltage sensing devices and are used to isolate a Faulted element of the BES. Devices that sense thermal, vibration, seismic, pressure, gas, or any other non-electrical inputs are excluded.

Non-microprocessor based equipment is treated differently than microprocessor-based equipment in the following ways; the relays should meet the asset owners' tolerances:

- Non-microprocessor devices must be tested with voltage and/or current applied to the device.
- Microprocessor devices may be tested through the integral testing of the device.
    - There is no specific protective relay commissioning test or relay routine test mandated.
    - There is no specific documentation mandated.

15.1.1 Frequently Asked Questions:

What calibration tolerance should be applied on electromechanical relays?

Each entity establishes their own acceptable tolerances when applying protective relaying on their system. For some Protection System Components, adjustment is required to bring measurement accuracy within the parameters established by the asset owner based on the specific application of the Component. A calibration failure is the result if testing finds the specified parameters to be out of tolerance.

15.2 Voltage & Current Sensing Devices (Table 1-3)

These are the current and voltage sensing devices, usually known as instrument transformers. There is presently a technology available (fiber-optic Hall-effect) that does not utilize conventional transformer technology; these devices and other technologies that produce quantities that represent the primary values of voltage and current are considered to be a type of voltage and current sensing devices included in this standard.

The intent of the maintenance activity is to verify the input to the protective relay from the device that produces the current or voltage signal sample.

There is no specific test mandated for these Components. The important thing about these signals is to know that the expected output from these Components actually reaches the

protective relay. Therefore, the proof of the proper operation of these Components also demonstrates the integrity of the wiring (or other medium used to convey the signal) from the current and voltage sensing device, all the way to the protective relay. The following observations apply:

- There is no specific ratio test, routine test or commissioning test mandated.
- There is no specific documentation mandated.
- It is required that the signal be present at the relay.
- This expectation can be arrived at from any of a number of means; including, but not limited to, the following: By calculation, by comparison to other circuits, by commissioning tests, by thorough inspection, or by any means needed to verify the circuit meets the asset owner's Protection System maintenance program.
- An example of testing might be a saturation test of a CT with the test values applied at the relay panel; this, therefore, tests the CT, as well as the wiring from the relay all the back to the CT.
- Another possible test is to measure the signal from the voltage and/or current sensing devices, during Load conditions, at the input to the relay.
- Another example of testing the various voltage and/or current sensing devices is to query the microprocessor relay for the Real-time Loading; this can then be compared to other devices to verify the quantities applied to this relay. Since the input devices have supplied the proper values to the protective relay, then the verification activity has been satisfied. Thus, event reports (and oscillographs) can be used to verify that the voltage and current sensing devices are performing satisfactorily.
- Still another method is to measure total watts and vars around the entire bus; this should add up to zero watts and zero vars, thus proving the voltage and/or current sensing devices system throughout the bus.
- Another method for proving the voltage and/or current-sensing devices is to complete commissioning tests on all of the transformers, cabling, fuses and wiring.
- Any other method that verifies the input to the protective relay from the device that produces the current or voltage signal sample.

15.2.1 Frequently Asked Questions:

What is meant by "…verify the current and voltage circuit inputs from the voltage and current sensing devices to the protective relays …" Do we need to perform ratio, polarity and saturation tests every few years?

No. You must verify that the protective relay is receiving the expected values from the voltage and current-sensing devices (typically voltage and current transformers). This can be as difficult as is proposed by the question (with additional testing on the cabling and substation wiring to ensure that the values arrive at the relays); or simplicity can be achieved by other verification methods. While some examples follow, these are not intended to represent an all-inclusive list; technology advances and ingenuity should not be excluded from making comparisons and verifications:

- Compare the secondary values, at the relay, to a metering circuit, fed by different current transformers, monitoring the same line as the questioned relay circuit.
- Compare the individual phase secondary values at the relay panel (with additional testing on the panel wiring to ensure that the values arrive at those relays) with the other phases, and verify that residual currents are within expected bounds.
- Observe all three phase currents and the residual current at the relay panel with an oscilloscope, observing comparable magnitudes and proper phase relationship, with additional testing on the panel wiring to ensure that the values arrive at the relays.
- Compare the values, as determined by the questioned relay (such as, but not limited to, a query to the microprocessor relay) to another protective relay monitoring the same line, with currents supplied by different CTs.
- Compare the secondary values, at the relay with values measured by test instruments (such as, but not limited to multi-meters, voltmeter, clamp-on ammeters, etc.) and verified by calculations and known ratios to be the values expected. For example, a single PT on a 100KV bus will have a specific secondary value that, when multiplied by the PT ratio, arrives at the expected bus value of 100KV.
- Query SCADA for the power flows at the far end of the line protected by the questioned relay, compare those SCADA values to the values as determined by the questioned relay.
- Totalize the Watts and VARs on the bus and compare the totals to the values as seen by the questioned relay.

The point of the verification procedure is to ensure that all of the individual Components are functioning properly; and that an ongoing proactive procedure is in place to re-check the various Components of the protective relay measuring Systems.

Is wiring insulation or hi-pot testing required by this Maintenance Standard?

No, wiring insulation and equipment hi-pot testing are not specifically required by the Maintenance Standard. However, if the method of verifying CT and PT inputs to the relay involves some other method than actual observation of current and voltage transformer secondary inputs to the relay, it might be necessary to perform some sort of cable integrity test to verify that the instrument transformer secondary signals are actually making it to the relay

and not being shunted off to ground. For instance, you could use CT excitation tests and PT turns ratio tests and compare to baseline values to verify that the instrument transformer outputs are acceptable. However, to conclude that these acceptable transformer instrument output signals are actually making it to the relay inputs, it also would be necessary to verify the insulation of the wiring between the instrument transformer and the relay.

My plant generator and transformer relays are electromechanical and do not have metering functions, as do microprocessor- based relays. In order for me to compare the instrument transformer inputs to these relays to the secondary values of other metered instrument transformers monitoring the same primary voltage and current signals, it would be necessary to temporarily connect test equipment, like voltmeters and clamp on ammeters, to measure the input signals to the relays. This practice seems very risky, and a plant trip could result if the technician were to make an error while measuring these current and voltage signals. How can I avoid this risk? Also, what if no other instrument transformers are available which monitor the same primary voltage or current signal?

Comparing the input signals to the relays to the outputs of other independent instrument transformers monitoring the same primary current or voltage is just one method of verifying the instrument transformer inputs to the relays, but is not required by the standard. Plants can choose how to best manage their risk. If online testing is deemed too risky, offline tests, such as, but not limited to, CT excitation test and PT turns ratio tests can be compared to baseline data and be used in conjunction with CT and PT secondary wiring insulation verification tests to adequately "verify the current and voltage circuit inputs from the voltage and current sensing devices to the protective relays …" while eliminating the risk of tripping an in service generator or transformer. Similarly, this same offline test methodology can be used to verify the relay input voltage and current signals to relays when there are no other instrument transformers monitoring available for purposes of signal comparison.

15.3 Control circuitry associated with protective functions (Table 1-5)

This Component of Protection Systems includes the trip coil(s) of the circuit breaker, circuit switcher or any other interrupting device. It includes the wiring from the batteries to the relays. It includes the wiring (or other signal conveyance) from every trip output to every trip coil. It includes any device needed for the correct processing of the needed trip signal to the trip coil of the interrupting device; this requirement is meant to capture inputs and outputs to and from a protective relay that are necessary for the correct operation of the protective functions. In short, every trip path must be verified; the method of verification is optional to the asset owner. An example of testing methods to accomplish this might be to verify, with a volt-meter, the existence of the proper voltage at the open contacts, the open circuited input circuit and at the trip coil(s). As every parallel trip path has similar failure modes, each trip path from relay to trip coil must be verified. Each trip coil must be tested to trip the circuit breaker (or other interrupting device) at least once. There is a requirement to operate the circuit breaker (or other interrupting device) at least once every six years as part of the complete functional test. If a suitable monitoring system is installed that verifies every parallel trip path, then the manual-intervention testing of those parallel trip paths can be eliminated; however, the actual operation of the circuit breaker must still occur at least once every six years. This six-year tripping requirement can be completed as easily as tracking the Real-time Fault-clearing operations on the circuit breaker, or tracking the trip coil(s) operation(s) during circuit breaker routine maintenance actions.

The circuit-interrupting device should not be confused with a motor-operated disconnect. The intent of this standard is to require maintenance intervals and activities on Protection Systems equipment, and not just all system isolating equipment.

It is necessary, however, to classify a device that actuates a high-speed auto-closing ground switch as an interrupting device, if this ground switch is utilized in a Protection System and forces a ground Fault to occur that then results in an expected Protection System operation to clear the forced ground Fault. The SDT believes that this is essentially a transferred-tripping device without the use of communications equipment. If this high-speed ground switch is "…designed to provide protection for the BES…" then this device needs to be treated as any other Protection System Component. The control circuitry would have to be tested within 12 years, and any electromechanically operated device will have to be tested every six years. If the spring-operated ground switch can be disconnected from the solenoid triggering unit, then the solenoid triggering unit can easily be tested without the actual closing of the ground blade.

The dc control circuitry also includes each auxiliary tripping relay (94) and each lock-out relay (86) that may exist in any particular trip scheme. If the lock-out relays (86) are electromechanical type Components, then they must be trip tested. The PSMT SDT considers these Components to share some similarities in failure modes as electromechanical protective relays; as such, there is a six-year maximum interval between mandated maintenance tasks unless PBM is applied.

Contacts of the 86 or 94 that pass the trip current on to the circuit interrupting device trip coils will have to be checked as part of the 12 year requirement. Normally-open contacts that are not used to pass a trip signal and normally-closed contacts do not have to be verified. Verification of the tripping paths is the requirement.

While relays that do not respond to electrical quantities are presently excluded from this standard, their control circuits are included if the relay is installed to detect Faults on BES Elements. Thus, the control circuit of a BES transformer sudden pressure relay should be verified every 12 years, assuming its integrity is not monitored. While a sudden pressure relay control circuit is included within the scope of PRC-005-2, other alarming relay control circuits, (i.e., SF-6 low gas) are not included, even though they may trip the breaker being monitored.

New technology is also accommodated here; there are some tripping Systems that have replaced the traditional hard-wired trip circuitry with other methods of trip-signal conveyance such as fiber-optics. It is the intent of the PSMT SDT to include this, and any other, technology that is used to convey a trip signal from a protective relay to a circuit breaker (or other interrupting device) within this category of equipment. The requirement for these Systems is verification of the tripping path.

Monitoring of the control circuit integrity allows for no maintenance activity on the control circuit (excluding the requirement to operate trip coils and electromechanical lockout and/or tripping auxiliary relays). Monitoring of integrity means to monitor for continuity and/or presence of voltage on each trip path. For Ethernet or fiber-optic control Systems, monitoring of integrity means to monitor communication ability between the relay and the circuit breaker.

The trip path from a sudden pressure device is a part of the Protection System control circuitry. The sensing element is omitted from PRC-005-2 testing requirements because the SDT is unaware of industry-recognized testing protocol for the sensing elements. The SDT believes that Protection Systems that trip (or can trip) the BES should be included. This position is

consistent with the currently-approved PRC-005-1, consistent with the SAR for Project 2007-17, and understands this to be consistent with the position of FERC staff.

15.3.1 Frequently Asked Questions:

Is it permissible to verify circuit breaker tripping at a different time (and interval) than when we verify the protective relays and the instrument transformers?

Yes, provided the entire Protective System is tested within the individual Component's maximum allowable testing intervals.

The Protection System Maintenance Standard describes requirements for verifying the tripping of circuit breakers. What is this telling me about maintenance of circuit breakers?

Requirements in PRC-005-2 are intended to verify the integrity of tripping circuits, including the breaker trip coil, as well as the presence of auxiliary supply (usually a battery) for energizing the trip coil if a protection function operates. Beyond this, PRC-005-2 sets no requirements for verifying circuit breaker performance, or for maintenance of the circuit breaker.

How do I test each dc Control Circuit trip path, as established in Table 1-5 "Protection System Control Circuitry (Trip coils and auxiliary relays)"?

Table 1-5 specifies that each breaker trip coil and lockout relays that carry trip current to a trip coil must be operated within the specified time period. The required operations may be via targeted maintenance activities, or by documented operation of these devices for other purposes such as Fault clearing.

Are high-speed ground switch trip coils included in the dc control circuitry?

Yes. PRC-005-2 includes high-speed grounding switch trip coils within the dc control circuitry to the degree that the initiating Protection Systems are characterized as "transmission Protection Systems."

Does the control circuitry and trip coil of a non-BES breaker, tripped via a BES protection Component, have to be tested per Table 1.5? (Refer to Table 3)

An example of an otherwise non-BES circuit breaker that is tripped via a BES protection Component might be (but is not limited to) a 12.5KV circuit breaker feeding (non-black-start) radial Loads but has a trip that originates from an under-frequency (81) relay.

- The relay must be verified.
- The voltage signal to the relay must be verified.
- All of the relevant dc supply tests still apply.
- The unmonitored trip circuit between the relay and any lock-out or auxiliary relay must be verified every 12 years.
- The unmonitored trip circuit between the lock-out (or auxiliary relay) and the non-BES breaker does not have to be proven with an electrical trip.
- In the case where there is no lock-out or auxiliary tripping relay used, the trip circuit to the non-BES breaker does not have to be proven with an electrical trip.
- The trip coil of the non-BES circuit breaker does not have to be individually proven with an electrical trip.

Do I have to verify operation of breaker "a" contacts or any other normally closed auxiliary contacts in the trip path of each breaker as part of my control circuit test?

Operation of normally-closed contacts does not have to be verified. Verification of the tripping paths is the requirement. The continuity of the normally closed contacts will be verified when the tripping path is verified.

15.4 Batteries and DC Supplies (Table 1-4)

The NERC definition of a Protection System is:

- Protective relays which respond to electrical quantities,
- Communications Systems necessary for correct operation of protective functions,
- Voltage and current sensing devices providing inputs to protective relays,
- Station dc supply associated with protective functions (including station batteries, battery chargers, and non-battery-based dc supply), and
- Control circuitry associated with protective functions through the trip coil(s) of the circuit breakers or other interrupting devices.

The station battery is not the only Component that provides dc power to a Protection System. In the new definition for Protection System, "station batteries" are replaced with "station dc supply" to make the battery charger and dc producing stored energy devices (that are not a battery) part of the Protection System that must be maintained.

The PSMT SDT recognizes that there are several technological advances in equipment and testing procedures that allow the owner to choose how to verify that a battery string is free of open circuits. The term "continuity" was introduced into the standard to allow the owner to choose how to verify continuity of a battery set by various methods, and not to limit the owner to other conventional methods of showing continuity. Continuity, as used in Table 1-4 of the standard, refers to verifying that there is a continuous current path from the positive terminal of the station battery set to the negative terminal. Without verifying continuity of a station battery, there is no way to determine that the station battery is available to supply dc power to the station. An open battery string will be an unavailable power source in the event of loss of the battery charger.

Batteries cannot be a unique population segment of a Performance-Based Maintenance Program (PBM) because there are too many variables in the electrochemical process to completely isolate all of the performance-changing criteria necessary for using PBM on battery Systems. However, nothing precludes the use of a PBM process for any other part of a dc supply besides the batteries themselves.

15.4.1 Frequently Asked Questions:

What constitutes the station dc supply, as mentioned in the definition of Protective System?

The previous definition of Protection System includes batteries, but leaves out chargers. The latest definition includes chargers, as well as dc Systems that do not utilize batteries. This revision of PRC-005-2 is intended to capture these devices that were not included under the previous definition. The station direct current (dc) supply normally consists of two Components: the battery charger and the station battery itself. There are also emerging

technologies that provide a source of dc supply that does not include either a battery or charger.

Battery Charger - The battery charger is supplied by an available ac source. At a minimum, the battery charger must be sized to charge the battery (after discharge) and supply the constant dc Load. In many cases, it may be sized also to provide sufficient dc current to handle the higher energy requirements of tripping breakers and switches when actuated by the protective relays in the Protection System.

Station Battery - Station batteries provide the dc power required for tripping and for supplying normal dc power to the station in the event of loss of the battery charger. There are several technologies of battery that require unique forms of maintenance as established in Table 1-4.

Emerging Technologies - Station dc supplies are currently being developed that use other energy storage technologies besides the station battery to prevent loss of the station dc supply when ac power is lost. Maintenance of these station dc supplies will require different kinds of tests and inspections. Table 1-4 presents maintenance activities and maximum allowable testing intervals for these new station dc supply technologies. However, because these technologies are relatively new, the maintenance activities for these station dc supplies may change over time.

What did the PSMT SDT mean by "continuity" of the dc supply?

The PSMT SDT recognizes that there are several technological advances in equipment and testing procedures that allow the owner to choose how to verify that a battery string is free of open circuits. The term "continuity" was introduced into the standard to allow the owner to choose how to verify continuity (no open circuits) of a battery set by various methods, and not to limit the owner to other conventional methods of showing continuity – lack of an open circuit. Continuity, as used in Table 1-4 of the standard, refers to verifying that there is a continuous current path from the positive terminal of the station battery set to the negative terminal (no open circuit). Without verifying continuity of a station battery, there is no way to determine that the station battery is available to supply dc power to the station. Whether it is caused from an open cell or a bad external connection, an open battery string will be an unavailable power source in the event of loss of the battery charger.

The current path through a station battery from its positive to its negative connection to the dc control circuits is composed of two types of elements. These path elements are the electrochemical path through each of its cells and all of the internal and external metallic connections and terminations of the batteries in the battery set. If there is loss of continuity (an open circuit) in any part of the electrochemical or metallic path, the battery set will not be available for service. In the event of the loss of the ac source or battery charger, the battery must be capable of supplying dc current, both for continuous dc Loads and for tripping breakers and switches. Without continuity, the battery cannot perform this function.
At generating stations and large transmission stations where battery chargers are capable of handling the maximum current required by the Protection System, there are still problems that could potentially occur when the continuity through the connected battery is interrupted.

- Many battery chargers produce harmonics which can cause failure of dc power supplies in microprocessor-based protective relays and other electronic devices connected to station dc supply. In these cases, the substation battery serves as a filter for these

harmonics. With the loss of continuity in the battery, the filter provided by the battery is no longer present.

- Loss of electrical continuity of the station battery will cause, in most battery chargers, regardless of the battery charger's output current capability, a delayed response in full output current from the charger. Almost all chargers have an intentional one- to two-second delay to switch from a low substation dc Load current to the maximum output of the charger. This delay would cause the opening of circuit breakers to be delayed, which could violate system performance standards.

Monitoring of the station dc supply voltage will not indicate that there is a problem with the dc current path through the battery, unless the battery charger is taken out of service. At that time, a break in the continuity of the station battery current path will be revealed because there will be no voltage on the station dc circuitry. This particular test method, while proving battery continuity, may not be acceptable to all installations.

Although the standard prescribes what must be accomplished during the maintenance activity, it does not prescribe how the maintenance activity should be accomplished. There are several methods that can be used to verify the electrical continuity of the battery. These are not the only possible methods, simply a sampling of some methods:

- One method is to measure that there is current flowing through the battery itself by a simple clamp on milliamp-range ammeter. A battery is always either charging or discharging. Even when a battery is charged, there is still a measurable float charge current that can be detected to verify that there is continuity in the electrical path through the battery.
- A simple test for continuity is to remove the battery charger from service and verify that the battery provides voltage and current to the dc system. However, the behavior of the various dc-supplied equipment in the station should be considered before using this approach.
- Manufacturers of microprocessor-controlled battery chargers have developed methods for their equipment to periodically (or continuously) test for battery continuity. For example, one manufacturer periodically reduces the float voltage on the battery until current from the battery to the dc Load can be measured to confirm continuity.
- Applying test current (as in some ohmic testing devices, or devices for locating dc grounds) will provide a current that when measured elsewhere in the string, will prove that the circuit is continuous.
- Internal ohmic measurements of the cells and units of lead-acid batteries (VRLA & VLA) can detect lack of continuity within the cells of a battery string; and when used in conjunction with resistance measurements of the battery's external connections, can prove continuity. Also some methods of taking internal ohmic measurements, by their very nature, can prove the continuity of a battery string without having to use the results of resistance measurements of the external connections.
- Specific gravity tests can infer continuity because, without continuity, there could be no charging occurring; and if there is no charging, then specific gravity will go down below acceptable levels.

No matter how the electrical continuity of a battery set is verified, it is a necessary maintenance activity that must be performed at the intervals prescribed by Table 1-4 to insure that the station dc supply has a path that can provide the required current to the Protection System at all times.

When should I check the station batteries to see if they have sufficient energy to perform as manufactured?

The answer to this question depends on the type of battery (valve-regulated lead-acid, vented lead-acid, or nickel-cadmium) and the maintenance activity chosen.

For example, if you have a valve-regulated lead-acid (VRLA) station battery, and you have chosen to evaluate the measured cell/unit internal ohmic values to the battery cell's baseline, you will have to perform verification at a maximum maintenance interval of no greater than every six months. While this interval might seem to be quite short, keep in mind that the six-month interval is important for VRLA batteries; this interval provides an accumulation of data that better shows when a VRLA battery is incapable of performing as manufactured.

If, for a VRLA station battery, you choose to conduct a performance capacity test on the entire station battery as the maintenance activity, then you will have to perform verification at a maximum maintenance interval of no greater than every three calendar years.

How is a baseline established for cell/unit internal ohmic measurements?

Establishment of cell/unit internal ohmic baseline measurements should be completed when lead-acid batteries are newly installed. To ensure that the baseline ohmic cell/unit values are most indicative of the station battery's ability to perform as manufactured, they should be made at some point in time after the installation to allow the cell chemistry to stabilize after the initial freshening charge. An accepted industry practice for establishing baseline values is after six-months of installation, with the battery fully charged and in service. However, it is recommended that each owner, when establishing a baseline, should consult the battery manufacturer for specific instructions on establishing an ohmic baseline for their product, if available.

When internal ohmic measurements are taken, consistent test equipment should be used to establish the baseline and used for the future trending of the cells internal ohmic measurements because of variances in test equipment and the type of ohmic measurement used by different manufacturer's equipment. Keep in mind that one manufacturer's "Conductance" test equipment does not produce similar results as another manufacturer's "Impedance" test equipment, even though both manufacturers have produced "Ohmic" test equipment.

For all new installations of valve-regulated lead-acid (VRLA) batteries and vented lead-acid (VLA) batteries, where trending of the cells internal ohmic measurements to a baseline are to be used to determine the ability of the station battery to perform as manufactured, the establishment of the baseline, as described above, should be followed at the time of installation to insure the most accurate trending of the cell/unit. However, often for older VRLA batteries, the owners of the station batteries have not established a baseline at installation. Also for owners of VLA batteries who want to establish a maintenance activity which requires trending of measured ohmic values to a baseline, there was typically no baseline established at installation of the station battery to trend to.

To resolve the problem of the unavailability of baseline internal ohmic measurements for the individual cell/unit of a station battery, many manufacturers of internal ohmic measurement devices have established libraries of baseline values for VRLA and VLA batteries using their testing device. Also, several of the battery manufacturers have libraries of baselines for their products that can be used to trend to. However, it is important that when using battery manufacturer-supplied data that it is verified that the baseline readings to be used were taken with the same ohmic testing device that will be used for future measurements (for example "Conductance Readings" from one manufacturer's test equipment do not correlate to "Impedance Readings" from a different manufacturer's test equipment). Although many manufacturers may have provided baseline values, which will allow trending of the internal ohmic measurements over the remaining life of a station battery, these baselines are not the actual cell/unit measurements for the battery being trended. It is important to have a baseline tailored to the station battery to more accurately use the tool of ohmic measurement trending. That more customized baseline can only be created by following the establishment of a baseline for each cell/unit at the time of installation of the station battery.

Why determine the State of Charge?

Even though there is no present requirement to check the state of charge of a battery, it can be a very useful tool in determining the overall condition of a battery system. The following discussions are offered as a general reference.

When a battery is fully charged, the battery is available to deliver its existing capacity. As a battery is discharged, its ability to deliver its maximum available capacity is diminished. It is necessary to determine if the state of charge has dropped to an unacceptable level.

What is State of Charge and how can it be determined in a station battery?

The state of charge of a battery refers to the ratio of residual capacity at a given instant to the maximum capacity available from the battery. When a battery is fully charged, the battery is available to deliver its existing capacity. As a battery is discharged, its ability to deliver its maximum available capacity is diminished. Knowing the amount of energy left in a battery compared with the energy it had when it was fully charged gives the user an indication of how much longer a battery will continue to perform before it needs recharging.

For vented lead-acid (VLA) batteries which use accessible liquid electrolyte, a hydrometer can be used to test the specific gravity of each cell as a measure of its state of charge. The hydrometer depends on measuring changes in the weight of the active chemicals. As the battery discharges, the active electrolyte, sulfuric acid, is consumed and the concentration of the sulfuric acid in water is reduced. This, in turn, reduces the specific gravity of the solution in direct proportion to the state of charge. The actual specific gravity of the electrolyte can, therefore, be used as an indication of the state of charge of the battery. Hydrometer readings may not tell the whole story, as it takes a while for the acid to get mixed up in the cells of a VLA battery. If measured right after charging, you might see high specific gravity readings at the top of the cell, even though it is much less at the bottom. Conversely, if taken shortly after adding water to the cell, the specific gravity readings near the top of the cell will be lower than those at the bottom.

Nickel-cadmium batteries, where the specific gravity of the electrolyte does not change during battery charge and discharge, and valve-regulated lead-acid (VRLA) batteries, where the electrolyte is not accessible, cannot have their state of charge determined by specific gravity

readings. For these two types of batteries, and also for VLA batteries, where another method besides taking hydrometer readings is desired, the state of charge may be determined by using the battery charger and taking voltage and current readings during float and equalize (high-rate charge mode). This method is an effective means of determining when the state of charge is low and when it is approaching a fully-charged condition, which gives the assurance that the available battery capacity will be maximized.

Why determine the Connection Resistance?

High connection resistance can cause abnormal voltage drop or excessive heating during discharge of a station battery. During periods of a high rate of discharge of the station battery, a very high resistance can cause severe damage. The maintenance requirement to verify battery terminal connection resistance in Table 1-4 is established to verify that the integrity of all battery electrical connections is acceptable. This verification includes cell-to-cell (intercell) and external circuit terminations. Your method of checking for acceptable values of intercell and terminal connection resistance could be by individual readings, or a combination of the two. There are test methods presently that can read post termination resistances and resistance values between external posts. There are also test methods presently available that take a combination reading of the post termination connection resistance plus the intercell resistance value plus the post termination connection resistance value. Either of the two methods, or any other method, that can show if the adequacy of connections at the battery posts is acceptable.

Adequacy of the electrical terminations can be determined by comparing resistance measurements for all connections taken at the time of station battery's installation to the same resistance measurements taken at the maintenance interval chosen, not to exceed the maximum maintenance interval of Table 1-4. Trending of the interval measurements to the baseline measurements will identify any degradation in the battery connections. When the connection resistance values exceed the acceptance criteria for the connection, the connection is typically disassembled, cleaned, reassembled and measurements taken to verify that the measurements are adequate when compared to the baseline readings.

What conditions should be inspected for visible battery cells?

The maintenance requirement to inspect the cell condition of all station battery cells where the cells are visible is a maintenance requirement of Table 1-4. Station batteries are different from any other Component in the Protection Station because they are a perishable product due to the electrochemical process which is used to produce dc electrical current and voltage. This inspection is a detailed visual inspection of the cells for abnormalities that occur in the aging process of the cell. In VLA battery visual inspections, some of the things that the inspector is typically looking for on the plates are signs of sulfation of the plates, abnormal color (possible copper contamination) and abnormal conditions such as cracked grids. The visual inspection could look for symptoms of hydration that would indicate that the battery has been left in a completely discharged state for a prolonged period. Besides looking at the plates for signs of aging, all internal connections, such as the bus bar connection to each plate, and the connections to all posts of the battery need to be visually inspected for abnormalities. In a complete visual inspection for the condition of the cell the cell plates, separators and sediment space of each cell must be looked at for signs of deterioration. An inspection of the station battery's cell condition also includes looking at all terminal posts and cell-to-cell electric

connections to ensure they are corrosion free. The case of the battery containing the cell, or cells, must be inspected for cracks and electrolyte leaks through cracks and the post seals.

This maintenance activity cannot be extended beyond the maximum maintenance interval of Table 1-4 by a Performance-Based Maintenance Program (PBM) because of the electrochemical aging process of the station battery, nor can there be any monitoring associated with it because there must be a visual inspection involved in the activity. A remote visual inspection could possibly be done, but its interval must be no greater than the maximum maintenance interval of Table 1-4.

Why is it necessary to verify the battery string can perform as manufactured? I only care that the battery can trip the breaker, which means that the battery can perform as designed. I oversize my batteries so that even if the battery cannot perform as manufactured, it can still trip my breakers.

The fundamental answer to this question revolves around the concept of battery performance "as designed" vs. battery performance "as manufactured." The purpose of the various sections of Table 1-4 of this standard is to establish requirements for the Protection System owner to maintain the batteries, to ensure they will operate the equipment when there is an incident that requires dc power, and ensure the batteries will continue to provide adequate service until at least the next maintenance interval. To meet these goals, the correct battery has to be properly selected to meet the design parameters, and the battery has to deliver the power it was manufactured to provide.

When testing batteries, it may be difficult to determine the original design (i.e., Load profile) of the dc system. This standard is not intended as a design document, and requirements relating to design are, therefore, not included.

Where the dc load profile is known, the best way to determine if the system will operate as designed is to conduct a service test on the battery. However, a service test alone might not fully determine if the battery is healthy. A battery with 50 percent capacity may be able to pass a service test, but the battery would be in a serious state of deterioration and could fail at some point in the near future.

To ensure that the battery will meet the required Load profile and continue to meet the Load profile until the next maintenance interval, the installed battery must be sized correctly (i.e., a correct design), and it must be in a good state of health. Since the design of the dc system is not within the scope of the standard, the only consistent and reliable method to ensure that the battery is in a good state of health is to confirm that it can perform as manufactured. If the battery can perform as manufactured and it has been designed properly, the system should operate properly until the next maintenance interval.

How do I verify the battery string can perform as manufactured?

Optimally, actual battery performance should be verified against the manufacturer's rating curves. The best practice for evaluating battery performance is via a performance test. However, due to both logistical and system reliability concerns, some Protection System owners prefer other methods to determine if a battery can perform as manufactured. There are several battery parameters that can be evaluated to determine if a battery can perform as manufactured. Ohmic measurements and float current are two examples of parameters that have been reported to assist in determining if a battery string can perform as manufactured.

The evaluation of battery parameters in determining battery health is a complex issue, and is not an exact science. This standard gives the user an opportunity to utilize other measured parameters to determine if the battery can perform as manufactured. It is the responsibility of the Protection System owner, however, to maintain a documented process that demonstrates the chosen parameter(s) and associated methodology used to determine if the battery string can perform as manufactured.

Whichever parameter is evaluated (ohmic measurements, float current, float voltages, temperature, specific gravity, etc.), the goal is to determine the value of the measurement (or the percentage change) at which the battery fails to perform as manufactured, or the point where the battery is deteriorating so rapidly that it will not perform as manufactured before the next maintenance interval.

This necessitates the need for establishing and documenting a baseline. A baseline may be required of every individual cell, a particular battery installation, or a specific make, model, or size of a cell. Given a consistent cell manufacturing process, it may be possible to establish a baseline number for the cell (make/model/type) and, therefore, a subsequent baseline for every installation would not be necessary. However, future installations of the same battery types should be spot-checked to ensure that your baseline remains applicable.

Consistency is the key when measuring and evaluating ohmic readings. Consistent testing methods by trained personnel are essential. Moreover, it is absolutely critical that personnel use the same make/model of test instrument every time readings are taken if the values are going to be compared. The type of probe, the location of the reading (post, connector, etc.) and the room temperature during the test needs to be carefully recorded when the readings are taken. For every subsequent time the readings are taken, the same make/model of the test instrument must be used, the same type of probes must be used, and the location of the reading must be the same.

A detailed understanding of the characteristic of a battery is also necessary if attempting to use float current as a measure of the ability of a battery to perform as manufactured. For example, trending of float current is a very effective way to determine the rate of antimony poisoning; and, thus, track the positive plate aging process in high antimony lead acid batteries (batteries with greater than 10 percent antimony in their grid lead alloys). The increased float current with age in these high lead antimony batteries can increase the positive plate aging process which gives an excellent indication of battery aging. Trending and evaluation of the measurements of float current on these high antimony lead acid batteries is an acceptable maintenance activity of Tables 1-4(a) and 1-4(b) for verifying the station battery can perform as manufactured. However, lead-calcium acid batteries do not have this property of being able to determine the aging of their grids by trending their float current, because their float current is constant over the life of the battery. Also the lower lead antimony (antimony two percent or lower) batteries do not exhibit this increase in float current as their plate structures age. When attempting to establish a trending program for lead-calcium or low lead antimony (such as lead-selenium) batteries, the Protection System owner should contact the manufacturer of the station battery to see if a trending process is recommended for determining aging of these products.

The establishment of a baseline may be different for various types of cells and for different types of installations. In some cases, it may be possible to obtain a baseline number from the

battery manufacturer, although it is much more likely that the baseline will have to be established after the installation is complete. To some degree, the battery may still be "forming" after installation; consequently, determining a stable baseline may not be possible until several months after the battery has been in service.

The most important part of this process is to determine the point where the ohmic reading (or other measured parameter(s)) indicates that the battery cannot perform as manufactured. That point could be an absolute number, an absolute change, or a percentage change of an established baseline.

Since there are no universally-accepted repositories of this information, the Protection System owner will have to determine the value/percentage where the battery cannot perform as manufactured (heretofore referred to as a failed cell). This is the most difficult and important part of the entire process.

To determine the point where the battery fails to perform as manufactured, it is helpful to have a history of a battery type, if the data includes the parameter(s) used to evaluate the battery's ability to perform as manufactured against the actual demonstrated performance/capacity of a battery/cell.

For example, when an ohmic reading has been recorded that the user suspects is indicating a failed cell, a performance test of that cell (or string) should be conducted in order to prove/quantify that the cell has failed. Through this process, the user needs to determine the ohmic value at which the performance of the cell has dropped below 80 percent of the manufactured, rated performance. It is likely that there may be a variation in ohmic readings that indicates a failed cell (possibly significant). It is prudent to use the most conservative values to determine the point at which the cell should be marked for replacement. Periodically, the user should demonstrate that an "adequate" ohmic reading equates to an adequate battery performance (>80% of capacity).

Similarly, acceptance criteria for "good" and "failed" cells should be established for other parameters such as float current, specific gravity, etc., if used to determine the ability of a battery to function as designed.

What are some of the differences between lead-acid and nickel-cadmium batteries?

There is a marked difference in the aging process of lead acid and nickel-cadmium station batteries. The difference in the aging process of these two types of batteries is chiefly due to the electrochemical process of the battery type. Aging and eventual failure of lead acid batteries is due to expansion and corrosion of the positive grid structure, loss of positive plate active material, and loss of capacity caused by physical changes in the active material of the positive plates. In contrast, the primary failure of nickel-cadmium batteries is due to the gradual linear aging of the active materials in the plates. The electrolyte of a nickel-cadmium battery only facilitates the chemical reaction (it functions only to transfer ions between the positive and negative plates), but is not chemically altered during the process like the electrolyte of a lead acid battery. A lead acid battery experiences continued corrosion of the positive plate and grid structure throughout its operational life while a nickel-cadmium battery does not.

Changes to the properties of a lead acid battery when periodically measured and trended to a baseline, can indicate aging of the grid structure, positive plate deterioration, or changes in the active materials in the plate.

Because of the clear differences in the aging process of lead acid and nickel-cadmium batteries, there are no significantly measurable properties of the nickel-cadmium battery that can be measured at a periodic interval and trended to determine aging. For this reason, Table 1-4(c) (Protection System Station dc supply Using nickel-cadmium [NiCad] Batteries) only specifies one minimum maintenance activity and associated maximum maintenance interval necessary to verify that the station battery can perform as manufactured. This maintenance activity is to conduct a performance or modified performance capacity test of the entire battery bank.

Why in Table 1-4 of PRC-005-2 is there a maintenance activity to inspect the structural intergrity of the battery rack?

The purpose of this inspection is to verify that the battery rack is correctly installed and has no deterioration that could weaken its structural integrity.
Because the battery rack is specifically manufactured for the battery that is mounted on it, weakening of its structural members by rust or corrosion can physically jeopardize the battery.

What is required to comply with the "Unintentional dc Grounds" requirement?

In most cases, the first ground that appears on a battery is not a problem. It is the unintentional ground that appears on the opposite pole that becomes problematic. Even then many Systems are designed to operate favorably under some unintentional DC ground situations. It is up to the owner of the Protection System to determine if corrective actions are needed on detected unintentional DC grounds. The standard merely requires that a check be made for the existence of Unintentional DC Grounds. Obviously, a "check-off" of some sort will have to be devised by the inspecting entity to document that a check is routinely done for Unintentional DC Grounds because of the possible consequences to the Protection System.

Where the standard refers to "all cells," is it sufficient to have a documentation method that refers to "all cells," or do we need to have separate documentation for every cell? For example, do I need 60 individual documented check-offs for good electrolyte level, or would a single check-off per bank be sufficient?

A single check-off per battery bank is sufficient for documentation, as long as the single check-off attests to checking all cells/units.

Does this standard refer to Station batteries or all batteries; for example, Communications Site Batteries?

This standard refers to Station Batteries. The drafting team does not believe that the scope of this standard refers to communications sites. The batteries covered under PRC-005-2 are the batteries that supply the trip current to the trip coils of the interrupting devices that are a part of the Protection System. The SDT believes that a loss of power to the communications Systems at a remote site would cause the communications Systems associated with protective relays to alarm at the substation. At this point, the corrective actions can be initiated.

My VRLA batteries have multiple-cells within an individual battery jar (or unit); how am I expected to comply with the cell-to-cell ohmic measurement requirements on these units that I cannot get to?

Measurement of cell/unit (not all batteries allow access to "individual cells" some "units" or jars may have multiple cells within a jar) internal ohmic values of all types of lead acid batteries

where the cells of the battery are not visible is a station dc supply maintenance activity in Table 1-4.

What are cell/unit internal ohmic measurements?

With the introduction of Valve-Regulated Lead-Acid (VRLA) batteries to station dc supplies in the 1980's several of the standard maintenance tools that are used on Vented Lead-Acid (VLA) batteries were unable to be used on this new type of lead-acid battery to determine its state of health. The only tools that were available to give indication of the health of these new VRLA batteries were voltage readings of the total battery voltage, the voltage of the individual cells and periodic discharge tests.

In the search for a tool for determining the health of a VRLA battery several manufacturers studied the electrical model of a lead acid battery's current path through its cell. The overall battery current path consists of resistance and inductive and capacitive reactance. The inductive reactance in the current path through the battery is so minuscule when compared to the huge capacitive reactance of the cells that it is often ignored in most circuit models of the battery cell. Taking the basic model of a battery cell manufacturers of battery test equipment have developed and marketed testing devices to take measurements of the current path to detect degradation in the internal path through the cell.

In the battery industry, these various types of measurements are referred to as ohmic measurements. Terms used by the industry to describe ohmic measurements are ac conductance, ac impedance, and dc resistance. They are defined by the test equipment providers and IEEE and refer to the method of taking ohmic measurements of a lead acid battery. For example, in one manufacturer's ac conductance equipment measurements are taken by applying a voltage of a known frequency and amplitude across a cell or battery unit and observing the ac current flow it produces in response to the voltage. A manufacturer of an ac impedance meter measures ac current of a known frequency and amplitude that is passed through the whole battery string and determines the impedances of each cell or unit by measuring the resultant ac voltage drop across them. On the other hand, dc resistance of a cell is measured by a third manufacturer's equipment by applying a dc Load across the cell or unit and measuring the step change in both the voltage and current to calculate the internal dc resistance of the cell or unit.

It is important to note that because of the rapid development of the market for ohmic measurement devices, there were no standards developed or used to mandate the test signals used in making ohmic measurements. Manufacturers using proprietary methods and applying different frequencies and magnitudes for their signals have developed a diversity of measurement devices. This diversity in test signals coupled with the three different types of ohmic measurements techniques (impedance conductance and resistance) make it impossible to always get the same ohmic measurement for a cell with different ohmic measurement devices. However, IEEE has recognized the great value for choosing one device for ohmic measurement, no matter who makes it or the method to calculate the ohmic measurement. The only caution given by IEEE and the battery manufacturers is that when trending the cells of a lead acid station battery consistent ohmic measurement devices should be used to establish the baseline measurement and to trend the battery set for its entire life.

For VRLA batteries both IEEE Standard 1188 (Maintenance, Testing and Replacement of VRLA Batteries) and IEEE Standard 1187 (Installation Design and Installation of VRLA Batteries)

recognize the importance of the maintenance activity of establishing a baseline for "cell/unit internal ohmic measurements (impedance, conductance and resistance)" and trending them at frequent intervals over the life of the battery. There are extensive discussions about the need for taking these measurements in these standards. IEEE Standard 1188 requires taking internal ohmic values as described in Annex C4 during regular inspections of the station battery. For VRLA batteries IEEE Standard 1188 in talking about the necessity of establishing a baseline and trending it over time says, "…depending on the degree of change a performance test, cell replacement or other corrective action may be necessary…" (IEEE std 1188-2005, C.4 page 18).

For VLA batteries IEEE Standard 484 (Installation of VLA batteries) gives several guidelines about establishing baseline measurements on newly installed lead acid stationary batteries. The standard also discusses the need to look for significant changes in the ohmic measurements, the caution that measurement data will differ with each type of model of instrument used, and lists a number of factors that affect ohmic measurements.

At the beginning of the 21st century, EPRI conducted a series of extensive studies to determine the relationship of internal ohmic measurements to the capacity of a lead acid battery cell. The studies indicated that internal ohmic measurements were in fact a good indicator of a lead acid battery cell's capacity, but because users often were only interested in the total station battery capacity and the technology does not precisely predict overall battery capacity, if a user only needs "an accurate measure of the overall battery capacity," they should "perform a battery capacity test."

Prior to the EPRI studies some large and small companies which owned and maintained station dc supplies in NERC Protection Systems developed maintenance programs where trending of ohmic measurements of cells/units of the station's battery became the maintenance activity for determining if the station battery could perform as manufactured. By evaluation of the trending of the ohmic measurements over time, the owner could track the performance of the individual components of the station battery and determine if a total station battery or components of it required capacity testing, removal, replacement or in many instances replacement of the entire station battery. By taking this condition based approach these owners have eliminated having to perform capacity testing at prescribed intervals to determine if a battery needs to be replaced and are still able to effectively determine if a station battery can perform as manufactured.

Why verify voltage?

There are two required maintenance activities associated with verification of dc voltages in Table 1-4. These two required activities are to verify station dc supply voltage and float voltage of the battery charger, and have different maximum maintenance intervals. Both of these voltage verification requirements relate directly to the battery charger maintenance.

The verification of the dc supply voltage is simply an observation of battery voltage to prove that the charger has not been lost or is not malfunctioning; a reading taken from the battery charger panel meter or even SCADA values of the dc voltage could be some of the ways that one could satisfy the requirements. Low battery voltage below float voltage indicates that the battery may be on discharge and, if not corrected, the station battery could discharge down to some extremely low value that will not operate the Protection System. High voltage, close to or above the maximum allowable dc voltage for equipment connected to the station dc supply indicates the battery charger may be malfunctioning by producing high dc voltage levels on the

Protection System. If corrective actions are not taken to bring the high voltage down, the dc power supplies and other electronic devices connected to the station dc supply may be damaged. The maintenance activity of verifying the float voltage of the battery charger is not to prove that a charger is lost or producing high voltages on the station dc supply, but rather to prove that the charger is properly floating the battery within the proper voltage limits. As above, there are many ways that this requirement can be met.

Why check for the electrolyte level?

In vented lead-acid (VLA) and nickel-cadmium (NiCad) batteries the visible electrolyte level must be checked as one of the required maintenance activities that must be performed at an interval that is equal to or less than the maximum maintenance interval of Table 1-4. Because the electrolyte level in valve-regulated lead-acid (VRLA) batteries cannot be observed, there is no maintenance activity listed in Table 1-4 of the standard for checking the electrolyte level. Low electrolyte level of any cell of a VLA or NiCad station battery is a condition requiring correction. Typically, the electrolyte level should be returned to an acceptable level for both types of batteries (VLA and NiCad) by adding distilled or other approved-quality water to the cell.

Often people confuse the interval for watering all cells required due to evaporation of the electrolyte in the station battery cells with the maximum maintenance interval required to check the electrolyte level. In many of the modern station batteries, the jar containing the electrolyte is so large with the band between the high and low electrolyte level so wide that normal evaporation which would require periodic watering of all cells takes several years to occur. However, because loss of electrolyte due to cracks in the jar, overcharging of the station battery, or other unforeseen events can cause rapid loss of electrolyte; the shorter maximum maintenance intervals for checking the electrolyte level are required. A low level of electrolyte in a VLA battery cell which exposes the tops of the plates can cause the exposed portion of the plates to accelerated sulfation resulting in loss of cell capacity. Also, in a VLA battery where the electrolyte level goes below the end of the cell withdrawal tube or filling funnel, gasses can exit the cell by the tube instead of the flame arrester and present an explosion hazard.

What are the parameters that can be evaluated in Tables 1-4(a) and 1-4(b)?

The most common parameter that is periodically trended and evaluated by industry today to verify that the station battery can perform as manufactured is internal ohmic cell/unit measurements.

In the mid 1990s, several large and small utilities began developing maintenance and testing programs for Protection System station batteries using a condition based maintenance approach of trending internal ohmic measurements to each station battery cell's baseline value. Battery owners use the data collected from this maintenance activity to determine (1) when a station battery requires a capacity test (instead of performing a capacity test on a predetermined, prescribed interval), (2) when an individual cell or battery unit should be replaced, or (3) based on the analysis of the trended data, if the station battery should be replaced without performing a capacity test.

Other examples of measurable parameters that can be periodically trended and evaluated for lead acid batteries are cell voltage, float current, connection resistance. However, periodically trending and evaluating cell/unit Ohmic measurements are the most common battery/cell

parameters that are evaluated by industry to verify a lead acid battery string can perform as manufactured.

Why does it appear that there are two maintenance activities in Table 1-4(b) (for VRLA batteries) that appear to be the same activity and have the same maximum maintenance interval?

There are two different and distinct reasons for doing almost the same maintenance activity at the same interval for valve-regulated lead-acid (VRLA) batteries. The first similar activity for VRLA batteries (Table 1-4(b)) that has the same maximum maintenance interval is to "measure battery cell/unit internal ohmic values." Part of the reason for this activity is because the visual inspection of the cell condition is unavailable for VRLA batteries. Besides the requirement to measure the internal ohmic measurements of VRLA batteries to determine the internal health of the cell, the maximum maintenance interval for this activity is significantly shorter than the interval for vented lead-acid (VLA) due to some unique failure modes for VRLA batteries. Some of the potential problems that VRLA batteries are susceptible to that do not affect VLA batteries are thermal runaway, cell dry-out, and cell reversal when one cell has a very low capacity.

The other similar activity listed in Table 1-4(b) is "…verify that the station battery can perform as manufactured by evaluating the measured cell/unit internal ohmic values to station battery baseline." This activity allows an owner the option to choose between this activity with its much shorter maximum maintenance interval or the longer maximum maintenance interval for the maintenance activity to "Verify that the station battery can perform as manufactured by conducting a performance, service, or modified performance capacity test of the entire battery bank."

For VRLA batteries, there are two drivers for internal ohmic readings. The first driver is for a means to trend battery life. A comparison and trending against the baseline new battery ohmic reading can be used in lieu of capacity tests to determine remaining battery life. Remaining battery life is analogous to stating that the battery is still able to "perform as manufactured." This is the intent of the "perform as manufactured six-month test" at Row 4 on Table 1-4b.

The second big driver is VRLA batteries tendency for thermal runaway. This is the intent of the "thermal runaway test" at Row 2 on Table 1-4b. In order to detect a cell in thermal runaway, you need not have a formal trending program to track when a cell has reached a 25 percent increase over baseline. Rather, it will stick out like a sore thumb when compared to the other cells in a string at a given point in time, regardless of the age of all the cells in a string. In other words, if the battery is 10 years old and all the cells are gradually approaching a 25 percent increase in ohmic values over baseline, then you have a battery which is approaching end of life. You need to get ready to buy a new battery, but you do not have to worry about an impending catastrophic failure. On the other hand, if the battery is five years old and you have one cell that has a markedly different ohmic reading than all the other cells, then you need to be worried that this cell is in thermal runaway and catastrophic failure is imminent.

If an entity elects to use a capacity test rather than a cell ohmic value trending program, this does not eliminate the need to be concerned about thermal runaway – the entity still needs to do the six-month readings and look for cells which are outliers in the string but they need not trend results against the factory/as new baseline. Some entities will not mind the extra administrative burden of having the ongoing trending program against baseline - others would

rather just do the capacity test and not have to trend the data against baseline. Nonetheless, all entities must look for ohmic outliers on a six-month basis.

It is possible to accomplish both tasks listed (trend testing for capability and testing for thermal runaway candidates) with the very same ohmic test. It becomes an analysis exercise of watching the trend from baselines and watching for the oblique cell measurement.

15.5 Associated communications equipment (Table 1-2)

The equipment used for tripping in a communications-assisted trip scheme is a vital piece of the trip circuit. Remote action causing a local trip can be thought of as another parallel trip path to the trip coil that must be tested. Besides the trip output and wiring to the trip coil(s), there is also a communications medium that must be maintained. Newer technologies now exist that achieve communications-assisted tripping without the conventional wiring practices of older technology. For example, older technologies may have included Frequency Shift Key methods. This technology requires that guard and trip levels be maintained. The actual tripping path(s) to the trip coil(s) may be tested as a parallel trip path within the dc control circuitry tests. Emerging technologies transfer digital information over a variety of carrier mediums that are then interpreted locally as trip signals. The requirements apply to the communicated signal needed for the proper operation of the protective relay trip logic or scheme. Therefore, this standard is applied to equipment used to convey both trip signals (permissive or direct) and block signals.

It was the intent of this standard to require that a test be performed on any communications-assisted trip scheme, regardless of the vintage of technology. The essential element is that the tripping (or blocking) occurs locally when the remote action has been asserted; or that the tripping (or blocking) occurs remotely when the local action is asserted. Note that the required testing can still be done within the concept of testing by overlapping segments. Associated communications equipment can be (but is not limited to) testing at other times and different frequencies as the protective relays, the individual trip paths and the affected circuit interrupting devices.

Some newer installations utilize digital signals over fiber-optics from the protective relays in the control house to the circuit interrupting device in the yard. This method of tripping the circuit breaker, even though it might be considered communications, must be maintained per the dc control circuitry maintenance requirements.

15.5.1 Frequently Asked Questions:

What are some examples of mechanisms to check communications equipment functioning?

For unmonitored Protection Systems, various types of communications Systems will have different facilities for on-site integrity checking to be performed at least every four months during a substation visit. Some examples are, but not limited to:

- On-off power-line carrier Systems can be checked by performing a manual carrier keying test between the line terminals, or carrier check-back test from one terminal.
- Systems which use frequency-shift communications with a continuous guard signal (over a telephone circuit, analog microwave system, etc.) can be checked by observing for a loss-of-guard indication or alarm. For frequency-shift power-line carrier Systems, the guard signal level meter can also be checked.
- Hard-wired pilot wire line Protection Systems typically have pilot-wire monitoring relays that give an alarm indication for a pilot wire ground or open pilot wire circuit loop.
- Digital communications Systems typically have a data reception indicator or data error indicator (based on loss of signal, bit error rate, or frame error checking).

For monitored Protection Systems, various types of communications Systems will have different facilities for monitoring the presence of the communications channel, and activating alarms that can be monitored remotely. Some examples are, but not limited to:

- On-off power-line carrier Systems can be shown to be operational by automated periodic power-line carrier check-back tests with remote alarming of failures.
- Systems which use a frequency-shift communications with a continuous guard signal (over a telephone circuit, analog microwave system, etc.) can be remotely monitored with a loss-of-guard alarm or low signal level alarm.
- Hard-wired pilot wire line Protection Systems can be monitored by remote alarming of pilot-wire monitoring relays.
- Digital communications Systems can activate remotely monitored alarms for data reception loss or data error indications.
- Systems can be queried for the data error rates.

For the highest degree of monitoring of Protection Systems, the communications system must monitor all aspects of the performance and quality of the channel that show it meets the design performance criteria, including monitoring of the channel interface to protective relays.

- In many communications Systems signal quality measurements, including signal-to-noise ratio, received signal level, reflected transmitter power or standing wave ratio, propagation delay, and data error rates are compared to alarm limits. These alarms are connected for remote monitoring.
- Alarms for inadequate performance are remotely monitored at all times, and the alarm communications system to the remote monitoring site must itself be continuously monitored to assure that the actual alarm status at the communications equipment location is continuously being reflected at the remote monitoring site.

What is needed for the four-month inspection of communications-assisted trip scheme equipment?

The four-month inspection applies to unmonitored equipment. An example of compliance with this requirement might be, but is not limited to:

With each site visit, check that the equipment is free from alarms; check any metered signal levels, and that power is still applied. While this might be explicit for a particular type of equipment (i.e., FSK equipment), the concept should be that the entity verify that the communications equipment that is used in a Protection System is operable through a cursory inspection and site visit. This site visit can be eliminated on this particular example if the FSK equipment had a monitored alarm on Loss of Guard. Blocking carrier Systems with auto checkbacks will present an alarm when the channel fails allowing a visual indication. With no auto checkback, the channel integrity will need to be verified by a manual checkback or a two ended signal check. This check could also be eliminated by bring the auto checkback failure alarm to the monitored central location.

Does a fiber optic I/O scheme used for breaker tripping or control within a station, for example - transmitting a trip signal or control logic between the control house and the breaker control cabinet, constitute a communications system?

This equipment is presently classified as being part of the Protection System Control Circuitry and tested per the portions of Table 1 applicable to Protection System Control Circuitry, rather than those portions of the table applicable to communications equipment.

In Table 1-2, the Maintenance Activities section of the Protective System Communications Equipment and Channels refers to the quality of the channel meeting "performance criteria." What is meant by performance criteria?

Protection System communications channels must have a means of determining if the channel and communications equipment is operating normally. If the channel is not operating normally, an alarm will be indicated. For unmonitored systems, this alarm will probably be on the panel. For monitored systems, the alarm will be transmitted to a remote location.

Each entity will have established a nominal performance level for each protective system communications channel that is consistent with proper functioning of the Protection System. If that level of nominal performance is not being met, the system will go into alarm. Following are some examples of protective system communications channel performance measuring:

- For direct transfer trip using a frequency shift power line carrier channel, a guard level monitor is part of the equipment. A normal receive level is established when the system is calibrated and if the signal level drops below an established level, the system will indicate an alarm.
- An on-off blocking signal over power line carrier is used for directional comparison blocking schemes on transmission lines. During a Fault, block logic is sent to the remote relays by turning on a local transmitter and sending the signal over the power line to a receiver at the remote end. This signal is normally off so continuous levels cannot be checked. These schemes use check-back testing to determine channel performance. A predetermined signal sequence is sent to the remote end and the remote end decodes this signal and sends a signal sequence back. If the sending end receives the correct information from the remote terminal, the test passes and no alarm is indicated. Full

power and reduced power tests are typically run. Power levels for these tests are determined at the time of calibration.

- Pilot wire relay systems use a hardwire communications circuit to communicate between the local and remote ends of the protective zone. This circuit is monitored by circulating a dc current between the relay Systems. A typical level may be 1 mA. If the level drops below the setting of the alarm monitor, the system will indicate an alarm.
- Modern digital relay systems use data communications to transmit relay information to the remote end relays. An example of this is a line current differential scheme commonly used on transmission lines. The protective relays communicate current magnitude and phase information over the communications path to determine if the Fault is located in the protective zone. Quantities such as digital packet loss, bit error rate and channel delay are monitored to determine the quality of the channel. These limits are determined and set during relay commissioning. Once set, any channel quality problems that fall outside the set levels will indicate an alarm.

The previous examples show how some protective relay communications channels can be monitored and how the channel performance can be compared to performance criteria established by the entity. This standard does not state what the performance criteria will be; it just requires that the entity establish nominal criteria so protective system channel monitoring can be performed.

How is the performance criteria of Protection System communications equipment involved in the maintenance program?

An entity determines the acceptable performance criteria, depending on the technology implemented. If the communications channel performance of a Protection System varies from the pre-determined performance criteria for that system, then these results should be investigated and resolved.

How do I verify the A/D converters of microprocessor-based relays?

There are a variety of ways to do this. Two examples would be: using values gathered via data communications and automatically comparing these values with values from other sources, or using groupings of other measurements (such as vector summation of bus feeder currents) for comparison. Many other methods are possible.

15.6 Alarms (Table 2)

In addition to the tables of maintenance for the Components of a Protection System, there is an additional table added for alarms. This additional table was added for clarity. This enabled the common alarm attributes to be consolidated into a single spot, and, thus, make it easier to read the Tables 1-1 through 1-5. The alarms need to arrive at a site wherein a corrective action can be initiated. This could be a control room, operations center, etc. The alarming mechanism can be a standard alarming system or an auto-polling system; the only requirement is that the alarm be brought to the action-site within 24 hours. This effectively makes manned-stations equivalent to monitored stations. The alarm of a monitored point (for example a monitored trip path with a lamp) in a manned-station now makes that monitored point eligible for monitored status. Obviously, these same rules apply to a non-manned-station, which is that if the monitored point has an alarm that is auto-reported to the operations center (for example) within 24 hours, then it too is considered monitored.

15.6.1 Frequently Asked Questions:

Why are there activities defined for varying degrees of monitoring a Protection System Component when that level of technology may not yet be available?

There may already be some equipment available that is capable of meeting the highest levels of monitoring criteria listed in the Tables. However, even if there is no equipment available today that can meet this level of monitoring the standard establishes the necessary requirements for when such equipment becomes available. By creating a roadmap for development, this provision makes the standard technology neutral. The Standard Drafting Team wants to avoid the need to revise the standard in a few years to accommodate technology advances that may be coming to the industry.

Does a fail-safe "form b" contact that is alarmed to a 24/7 operation center classify as an alarm path with monitoring?

If the fail-safe "form-b" contact that is alarmed to a 24/7 operation center causes the alarm to activate for failure of any portion of the alarming path from the alarm origin to the 24/7 operations center, then this can be classified as an alarm path with monitoring.

15.7 Distributed UFLS and Distributed UVLS Systems (Table 3)

Distributed UFLS and Distributed UVLS Systems have their maintenance activities documented in Table 3 due to their distributed nature allowing reduced maintenance activities and extended maximum maintenance intervals. Relays have the same maintenance activities and intervals as Table 1-1. Voltage and current-sensing devices have the same maintenance activity and interval as Table 1-3. DC Systems need only have their voltage read at the relay every 12 years. Control circuits have the following maintenance activities every 12 years:

- Verify the trip path between the relay and lock-out and/or auxiliary tripping device(s).
- Verify operation of any lock-out and/or auxiliary tripping device(s) used in the trip circuit.
- No verification of trip path required between the lock-out (and/or auxiliary tripping device) and the non-BES interrupting device.
- No verification of trip path required between the relay and trip coil for circuits that have no lock-out and/or auxiliary tripping device(s).
- No verification of trip coil required.

No maintenance activity is required for associated communication Systems for distributed UFLS and distributed UVLS schemes.

Non-BES interrupting devices that participate in a distributed UFLS or distributed UVLS scheme are excluded from the tripping requirement, and part of the control circuit test requirement; however, the part of the trip path control circuitry between the Load-Shed relay and lock-out or auxiliary tripping relay must be tested at least once every 12 years. In the case where there is no lock-out or auxiliary tripping relay used in a distributed UFLS or UVLS scheme which is not part of the BES, there is no control circuit test requirement. There are many circuit interrupting devices in the distribution system that will be operating for any given under-frequency event that requires tripping for that event. A failure in the tripping action of a single distributed system circuit breaker (or non-BES equipment interruption device) will be far less significant than, for example, any single Transmission Protection System failure, such as a failure of a bus

differential lock-out relay. While many failures of these distributed system circuit breakers (or non-BES equipment interruption device) could add up to be significant, it is also believed that many circuit breakers are operated often on just Fault clearing duty; and, therefore, these circuit breakers are operated at least as frequently as any requirements that appear in this standard.

There are times when a Protection System Component will be used on a BES device, as well as a non-BES device, such as a battery bank that serves both a BES circuit breaker and a non-BES interrupting device used for UFLS. In such a case, the battery bank (or other Protection System Component) will be subject to the Tables of the standard because it is used for the BES.

15.7.1 Frequently Asked Questions:

The standard reaches further into the distribution system than we would like for UFLS and UVLS

While UFLS and UVLS equipment are located on the distribution network, their job is to protect the Bulk Electric System. This is not beyond the scope of NERC's 215 authority.

FPA section 215(a) definitions section defines bulk power system as: "(A) facilities and control Systems necessary for operating an interconnected electric energy transmission network (or any portion thereof)." That definition, then, is limited by a later statement which adds the term bulk power system "…does not include facilities used in the local distribution of electric energy." Also, Section 215 also covers users, owners, and operators of bulk power Facilities.

UFLS and UVLS (when the UVLS is installed to prevent system voltage collapse or voltage instability for BES reliability) are not "used in the local distribution of electric energy," despite their location on local distribution networks. Further, if UFLS/UVLS facilities were not covered by the reliability standards, then in order to protect the integrity of the BES during under-frequency or under-voltage events, that Load would have to be shed at the Transmission bus to ensure the Load-generation balance and voltage stability is maintained on the BES.

15.8 Examples of Evidence of Compliance

To comply with the requirements of this standard, an entity will have to document and save evidence. The evidence can be of many different forms. The Standard Drafting Team recognizes that there are concurrent evidence requirements of other NERC standards that could, at times, fulfill evidence requirements of this Standard.

15.8.1 Frequently Asked Questions:

What forms of evidence are acceptable?

Acceptable forms of evidence, as relevant for the requirement being documented include, but are not limited to:

- Process documents or plans
- Data (such as relay settings sheets, photos, SCADA, and test records)
- Database lists, records and/or screen shots that demonstrate compliance information
- Prints, diagrams and/or schematics
- Maintenance records
- Logs (operator, substation, and other types of log)
- Inspection forms

- Mail, memos, or email proving the required information was exchanged, coordinated, submitted or received
- Check-off forms (paper or electronic)
- Any record that demonstrates that the maintenance activity was known, accounted for, and/or performed.

If I replace a failed Protection System Component with another Component, what testing do I need to perform on the new Component?

In order to reset the Table 1 maintenance interval for the replacement Component, all relevant Table 1 activities for the Component should be performed.

I have evidence to show compliance for PRC-016 ("Special Protection System Misoperation"). Can I also use it to show compliance for this Standard, PRC-005-2?

Maintaining evidence for operation of Special Protection Systems could concurrently be utilized as proof of the operation of the associated trip coil (provided one can be certain of the trip coil involved). Thus, the reporting requirements that one may have to do for the Misoperation of a Special Protection Scheme under PRC-016 could work for the activity tracking requirements under this PRC-005-2.

I maintain Disturbance records which show Protection System operations. Can I use these records to show compliance?

These records can be concurrently utilized as dc trip path verifications, to the degree that they demonstrate the proper function of that dc trip path.

I maintain test reports on some of my Protection System Components. Can I use these test reports to show that I have verified a maintenance activity?

Yes.

References

1. Protection System Maintenance: A Technical Reference. Prepared by the System Protection and Controls Task Force of the NERC Planning Committee. Dated September 13, 2007.

2. "Predicating The Optimum Routine test Interval For Protection Relays," by J. J. Kumm, M.S. Weber, D. Hou, and E. O. Schweitzer, III, IEEE Transactions on Power Delivery, Vol. 10, No. 2, April 1995.

3. "Transmission Relay System Performance Comparison For 2000, 2001, 2002, 2003, 2004 and 2005," Working Group I17 of Power System Relaying Committee of IEEE Power Engineering Society, May 2006.

4. "A Survey of Relaying Test Practices," Special Report by WG I11 of Power System Relaying Committee of IEEE Power Engineering Society, September 16, 1999.

5. "Transmission Protective Relay System Performance Measuring Methodology," Working Group I3 of Power System Relaying Committee of IEEE Power Engineering Society, January 2002.

6. "Processes, Issues, Trends and Quality Control of Relay Settings," Working Group C3 of Power System Relaying Committee of IEEE Power Engineering Society, December 2006.

7. "Proposed Statistical Performance Measures for Microprocessor-Based Transmission-Line Protective Relays, Part I - Explanation of the Statistics, and Part II - Collection and Uses of Data," Working Group D5 of Power System Relaying Committee of IEEE Power Engineering Society, May 1995; Papers 96WM 016-6 PWRD and 96WM 127-1 PWRD, 1996 IEEE Power Engineering Society Winter Meeting.

8. "Analysis And Guidelines For Testing Numerical Protection Schemes," Final Report of CIGRE WG 34.10, August 2000.

9. "Use of Preventative Maintenance and System Performance Data to Optimize Scheduled Maintenance Intervals," H. Anderson, R. Loughlin, and J. Zipp, Georgia Tech Protective Relay Conference, May 1996.

10. "Battery Performance Monitoring by Internal Ohmic Measurements" EPRI Application Guidelines for Stationary Batteries TR- 108826 Final Report, December 1997.

11. "IEEE Recommended Practice for Maintenance, Testing, and Replacement of Valve-Regulated Lead-Acid (VRLA) Batteries for Stationary Applications," IEEE Power Engineering Society Std 1188 – 2005.

12. "IEEE Recommended Practice for Maintenance, Testing, and Replacement of Vented Lead-Acid Batteries for Stationary Applications," IEEE Power & Engineering Society Std 45-2010.

13. "IEEE Recommended Practice for Installation design and Installation of Vented Lead-Acid Batteries for Stationary Applications," IEEE Std 484 – 2002.

14. "Stationary Battery Monitoring by Internal Ohmic Measurements," EPRI Technical Report, 1002925 Final Report, December 2002.

15. "Stationary Battery Guide: Design Application, and Maintenance" EPRI Revision 2 of TR-100248, 1006757, August 2002.

PSMT SDT References

16. “Essentials of Statistics for Business and Economics” Anderson, Sweeney, Williams, 2003

17. “Introduction to Statistics and Data Analysis” - Second Edition, Peck, Olson, Devore, 2005

18. “Statistical Analysis for Business Decisions” Peters, Summers, 1968

Figures

Figure 1: Typical Transmission System

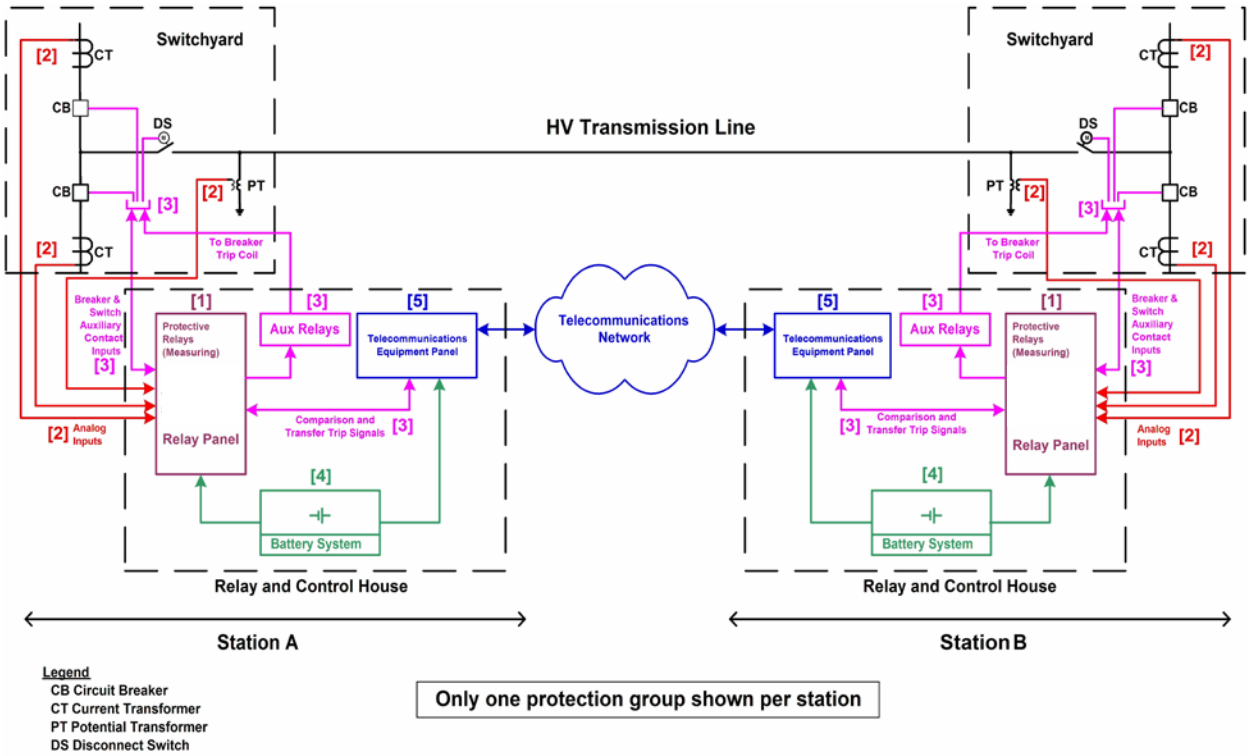

For information on Components, see ***Figure 1 & 2 Legend – Components of Protection Systems***

Figure 2: Typical Generation System

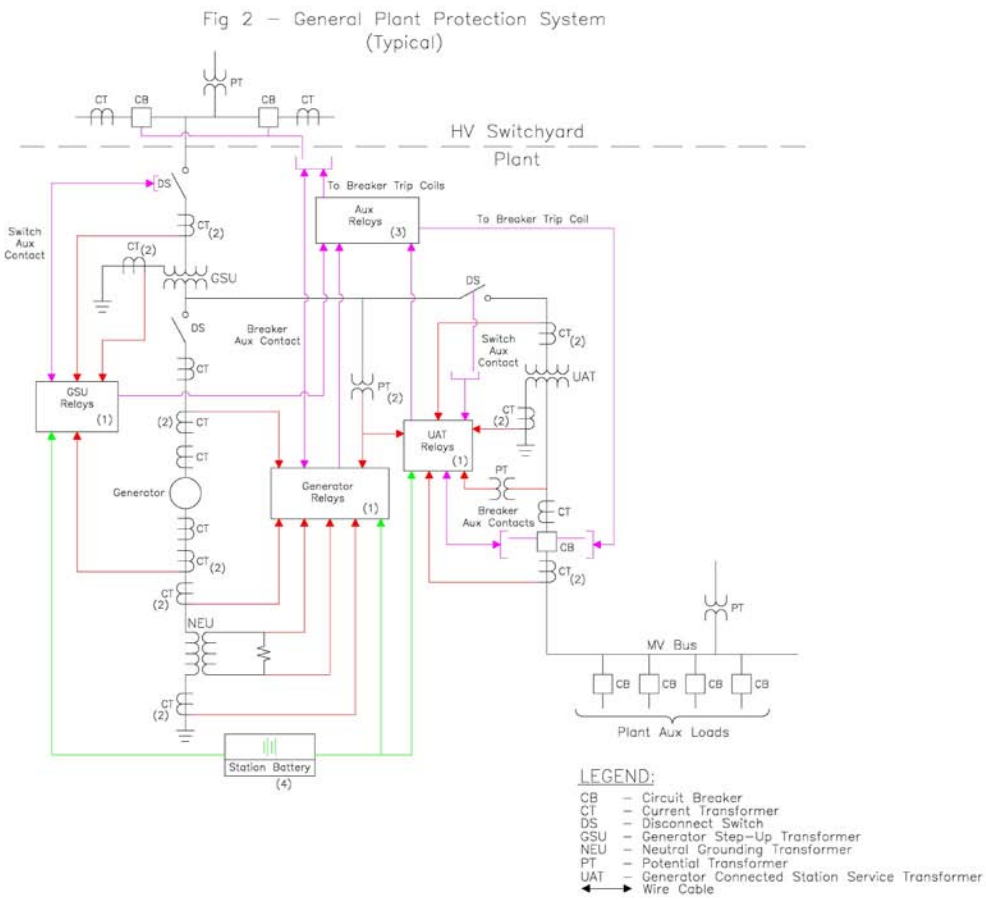

For information on Components, see ***Figure 1 & 2 Legend – Components of Protection Systems***

Figure 1 & 2 Legend – Components of Protection Systems

Number in Figure	Component of Protection System	Includes	Excludes
1	Protective relays which respond to electrical quantities	All protective relays that use current and/or voltage inputs from current & voltage sensors and that trip the 86, 94 or trip coil.	Devices that use non-electrical methods of operation including thermal, pressure, gas accumulation, and vibration. Any ancillary equipment not specified in the definition of Protection Systems. Control and/or monitoring equipment that is not a part of the automatic tripping action of the Protection System
2	Voltage and current sensing devices providing inputs to protective relays	The signals from the voltage & current sensing devices to the protective relay input.	Voltage & current sensing devices that are not a part of the Protection System, including sync-check Systems, metering Systems and data acquisition Systems.
3	Control circuitry associated with protective functions	All control wiring (or other medium for conveying trip signals) associated with the tripping action of 86 devices, 94 devices or trip coils (from all parallel trip paths). This would include fiber-optic Systems that carry a trip signal as well as hard-wired Systems that carry trip current.	Closing circuits, SCADA circuits, other devices in control scheme not passing trip current
4	Station dc supply	Batteries and battery chargers and any control power system which has the function of supplying power to the protective relays, associated trip circuits and trip coils.	Any power supplies that are not used to power protective relays or their associated trip circuits and trip coils.
5	Communications Systems necessary for correct operation of protective functions	Tele-protection equipment used to convey specific information, in the form of analog or digital signals, necessary for the correct operation of protective functions.	Any communications equipment that is not used to convey information necessary for the correct operation of protective functions.

Additional information can be found in References

Appendix A

The following illustrates the concept of overlapping verifications and tests as summarized in Section 10 of the paper. As an example, Figure A-1 shows protection for a critical transmission line by carrier blocking directional comparison pilot relaying. The goal is to verify the ability of the entire two-terminal pilot protection scheme to protect for line Faults, and to avoid over-tripping for Faults external to the transmission line zone of protection bounded by the current transformer locations.

Figure A-1

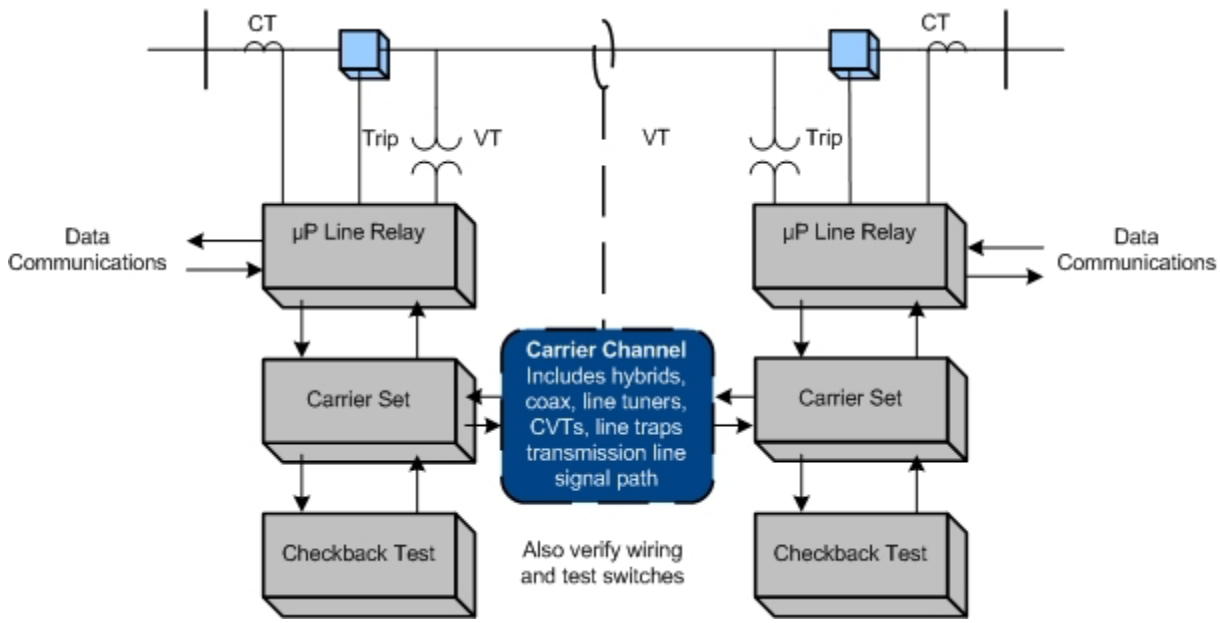

In this example (Figure A1), verification takes advantage of the self-monitoring features of microprocessor multifunction line relays at each end of the line. For each of the line relays themselves, the example assumes that the user has the following arrangements in place:

1. The relay has a data communications port that can be accessed from remote locations.
2. The relay has internal self-monitoring programs and functions that report failures of internal electronics, via communications messages or alarm contacts to SCADA.
3. The relays report loss of dc power, and the relays themselves or external monitors report the state of the dc battery supply.
4. The CT and PT inputs to the relays are used for continuous calculation of metered values of volts, amperes, plus Watts and VARs on the line. These metered values are reported by data communications. For maintenance, the user elects to compare these readings to those of other relays, meters, or DFRs. The other readings may be from redundant relaying or measurement Systems or they may be derived from values in other protection zones. Comparison with other such readings to within required relaying accuracy verifies Voltage & Current Sensing Devices, wiring, and analog signal input processing of the relays. One

effective way to do this is to utilize the relay metered values directly in SCADA, where they can be compared with other references or state estimator values.

5. Breaker status indication from auxiliary contacts is verified in the same way as in (2). Status indications must be consistent with the flow or absence of current.
6. Continuity of the breaker trip circuit from dc bus through the trip coil is monitored by the relay and reported via communications.
7. Correct operation of the on-off carrier channel is also critical to security of the Protection System, so each carrier set has a connected or integrated automatic checkback test unit. The automatic checkback test runs several times a day. Newer carrier sets with integrated checkback testing check for received signal level and report abnormal channel attenuation or noise, even if the problem is not severe enough to completely disable the channel.

These monitoring activities plus the check-back test comprise automatic verification of all the Protection System Elements that experience tells us are the most prone to fail. But, does this comprise a complete verification?

Figure A-2

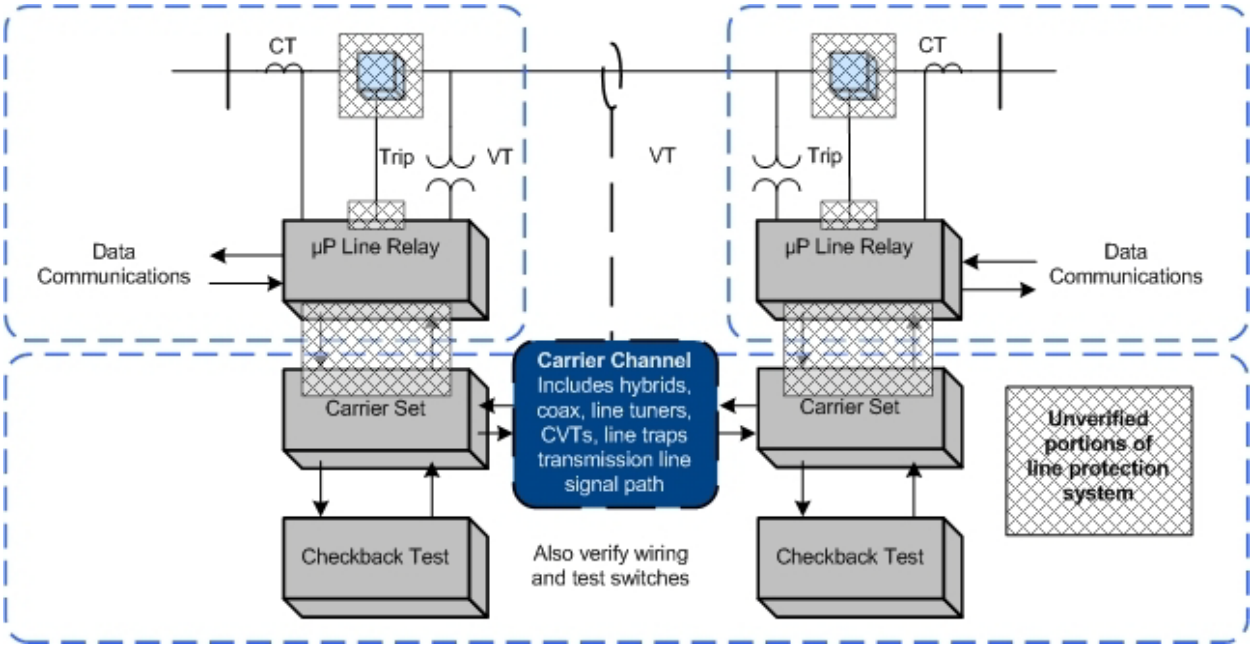

The dotted boxes of Figure A-2 show the sections of verification defined by the monitoring and verification practices just listed. These sections are not completely overlapping, and the shaded regions show Elements that are not verified:

1. The continuity of trip coils is verified, but no means is provided for validating the ability of the circuit breaker to trip if the trip coil should be energized.

2. Within each line relay, all the microprocessors that participate in the trip decision have been verified by internal monitoring. However, the trip circuit is actually energized by the contacts of a small telephone-type "ice cube" relay within the line protective relay. The microprocessor energizes the coil of this ice cube relay through its output data port and a transistor driver circuit. There is no monitoring of the output port, driver circuit, ice cube relay, or contacts of that relay. These Components are critical for tripping the circuit breaker for a Fault.
3. The check-back test of the carrier channel does not verify the connections between the relaying microprocessor internal decision programs and the carrier transmitter keying circuit or the carrier receiver output state. These connections include microprocessor I/O ports, electronic driver circuits, wiring, and sometimes telephone-type auxiliary relays.
4. The correct states of breaker and disconnect switch auxiliary contacts are monitored, but this does not confirm that the state change indication is correct when the breaker or switch opens.

A practical solution for (1) and (2) is to observe actual breaker tripping, with a specified maximum time interval between trip tests. Clearing of naturally-occurring Faults are demonstrations of operation that reset the time interval clock for testing of each breaker tripped in this way. If Faults do not occur, manual tripping of the breaker through the relay trip output via data communications to the relay microprocessor meets the requirement for periodic testing.

PRC-005 does not address breaker maintenance, and its Protection System test requirements can be met by energizing the trip circuit in a test mode (breaker disconnected) through the relay microprocessor. This can be done via a front-panel button command to the relay logic, or application of a simulated Fault with a relay test set. However, utilities have found that breakers often show problems during Protection System tests. It is recommended that Protection System verification include periodic testing of the actual tripping of connected circuit breakers.

Testing of the relay-carrier set interface in (3) requires that each relay key its transmitter, and that the other relay demonstrate reception of that blocking carrier. This can be observed from relay or DFR records during naturally occurring Faults, or by a manual test. If the checkback test sequence were incorporated in the relay logic, the carrier sets and carrier channel are then included in the overlapping segments monitored by the two relays, and the monitoring gap is completely eliminated.

Appendix B — Protection System Maintenance Standard Drafting Team

Charles W. Rogers
Chairman
Consumers Energy Co.

John B. Anderson
Xcel Energy

Merle Ashton
Tri-State G&T

Bob Bentert
Florida Power & Light Company

Forrest Brock
Western Farmers Electric Cooperative

Aaron Feathers
Pacific Gas and Electric Company

Sam Francis
Oncor Electric Delivery

Carol Gerou
Midwest Reliability Organization

Russell C. Hardison
Tennessee Valley Authority

David Harper
NRG Texas Maintenance Services

James M. Kinney
FirstEnergy Corporation

Mark Lucas
ComEd

Kristina Marriott
ENOSERV

Al McMeekin
NERC

Michael Palusso
Southern California Edison

Mark Peterson
Great River Energy

John Schecter
American Electric Power

William D. Shultz
Southern Company Generation

Eric A. Udren
Quanta Technology

Scott Vaughan
City of Roseville Electric Department

Matthew Westrich
American Transmission Company

Philip B. Winston
Southern Company Transmission

David Youngblood
Luminant Power

John A. Zipp
ITC Holdings

NERC
NORTH AMERICAN ELECTRIC
RELIABILITY CORPORATION

Supplementary Reference and FAQ - Draft

PRC-005-2 Protection System Maintenance

~~January 17~~May, 2012

RELIABILITY | ACCOUNTABILITY

3353 Peachtree Road NE
Suite 600, North Tower
Atlanta, GA 30326
404-446-2560 | www.nerc.com

Table of Contents

Table of Contents ii

1. Introduction and Summary 1

2. Need for Verifying Protection System Performance 2

2.1 Existing NERC Standards for Protection System Maintenance and Testing 2

2.2 Protection System Definition 3

2.3 Applicability of New Protection System Maintenance Standards 3

2.3.1 Frequently Asked Questions: 4

2.4 Applicable Relays 6

2.4.1 Frequently Asked Questions: 6

3. Protection Systems Product Generations 8

4. Definitions 10

4.1 Frequently Asked Questions: 10

5. Time-Based Maintenance (TMB) Programs 12

5.1 Maintenance Practices 12

5.1.1 Frequently Asked Questions: 14

5.2 Extending Time-Based Maintenance 15

5.2.1 Frequently Asked Questions: 15

6. Condition-Based Maintenance (CMB) Programs 17

6.1 Frequently Asked Questions: 17

7. Time-Based Versus Condition-Based Maintenance 19

7.1 Frequently Asked Questions: 19

8. Maximum Allowable Verification Intervals 25

8.1 Maintenance Tests 25

8.1.1 Table of Maximum Allowable Verification Intervals 25

8.1.2 Additional Notes for Tables 1-1 through 1-5 and Table 3 27

8.1.3 Frequently Asked Questions: 28

8.2 Retention of Records 33

8.2.1 Frequently Asked Questions: 33

8.3 Basis for Table 1 Intervals 35

8.4 Basis for Extended Maintenance Intervals for Microprocessor Relays 36

9. Performance-Based Maintenance Process 39

9.1 Minimum Sample Size 40

9.2 Frequently Asked Questions: 42

10. Overlapping the Verification of Sections of the Protection System 53

10.1 Frequently Asked Questions: 53

11. Monitoring by Analysis of Fault Records 54

11.1 Frequently Asked Questions: 55

12. Importance of Relay Settings in Maintenance Programs 56

12.1 Frequently Asked Questions: 56

13. Self-Monitoring Capabilities and Limitations 59

13.1 Frequently Asked Questions: 60

14. Notification of Protection System Failures 61

15. Maintenance Activities 62

15.1 Protective Relays (Table 1-1) 62

15.1.1 Frequently Asked Questions: 62

15.2 Voltage & Current Sensing Devices (Table 1-3) 62

15.2.1 Frequently Asked Questions: 64

15.3 Control circuitry associated with protective functions (Table 1-5) 65

15.3.1 Frequently Asked Questions: 67

15.4 Batteries and DC Supplies (Table 1-4) 68

15.4.1 Frequently Asked Questions: 69

15.5 Associated communications equipment (Table 1-2) 82

15.5.1 Frequently Asked Questions: 83

15.6 Alarms (Table 2) 86

15.6.1 Frequently Asked Questions: 86

15.7 Distributed UFLS and UVLS Systems (Table 3) 86

15.7.1 Frequently Asked Questions: 87

15.8 Examples of Evidence of Compliance 88

15.8.1 Frequently Asked Questions: 88

References 89

Figures 91

Figure 1: Typical Transmission System 91

Figure 2: Typical Generation System 92

Figure 1 & 2 Legend – Components of Protection Systems 93

Appendix A 94

Appendix B 97

1. Introduction and Summary

Note: This supplementary reference ~~to~~for PRC-005-2 is neither mandatory nor enforceable.

NERC currently has four Reliability Standards that are mandatory and enforceable in the United States and address various aspects of maintenance and testing of Protection and Control ~~systems.~~Systems.

These standards are:

PRC-005-1 — Transmission and Generation Protection System Maintenance and Testing

PRC-008-0 — Underfrequency Load Shedding Equipment Maintenance Programs

PRC-011-0 — UVLS System Maintenance and Testing

PRC-017-0 — Special Protection System Maintenance and Testing

While these standards require that applicable entities have a maintenance program for Protection Systems, and that these entities must be able to demonstrate they are carrying out such a program, there are no specifics regarding the technical requirements for Protection System maintenance programs. Furthermore, FERC Order 693 directed additional modifications respective to Protection System maintenance programs. PRC-005-2 combines and replaces PRC-005, PRC-008, PRC-011 and PRC-017.

2. Need for Verifying Protection System Performance

Protective relays have been described as silent sentinels, and do not generally demonstrate their performance until a ~~fault~~Fault or other power system problem requires that they operate to protect power system elements, or even the entire Bulk Electric System (BES). Lacking ~~faults~~Faults, switching operations or system problems, the Protection Systems may not operate, beyond static operation, for extended periods. A ~~misoperation~~Misoperation - a false operation of a Protection System or a failure of the Protection System to operate, as designed, when needed - can result in equipment damage, personnel hazards, and wide-area ~~disturbances~~Disturbances or unnecessary customer outages. Maintenance or testing programs are used to determine the performance and availability of Protection Systems.

Typically, utilities have tested Protection Systems at fixed time intervals, unless they had some incidental evidence that a particular Protection System was not behaving as expected. Testing practices vary widely across the industry. Testing has included system functionality, calibration of measuring devices, and correctness of settings. Typically, a Protection System must be visited at its installation site and, in many cases, removed from service for this testing.

Fundamentally, a Reliability Standard for Protection System Maintenance and Testing requires the performance of the maintenance activities that are necessary to detect and correct plausible age and service related degradation of the Protection System ~~components~~Components, such that a properly built and commissioned Protection System will continue to function as designed over its service life.

Similarly station batteries, which are an important part of the station dc supply, are not called upon to provide instantaneous dc power to the Protection System until power is required by the Protection System to operate circuit breakers or interrupting devices to clear ~~faults~~Faults or to isolate equipment.

2.1 Existing NERC Standards for Protection System Maintenance and Testing

For critical BES protection functions, NERC ~~Standards~~standards have required that each utility or asset owner define a testing program. The starting point is the existing Standard PRC-005, briefly restated as follows:

Purpose: To document and implement programs for the maintenance of all Protection Systems affecting the reliability of the Bulk Electric System (BES) so that these Protection Systems are kept in working order.

PRC-005-1 is not specific on where the boundaries of the Protection Systems lie. However, the definition of Protection System in the NERC Glossary of Terms used in Reliability Standards indicates what must be included as a minimum.

At the beginning of the project to develop PRC-005-2, the definition of Protection System was:

Protective relays, associated communications ~~systems~~Systems, voltage and current sensing devices, station batteries and dc control circuitry.

Applicability: Owners of generation and transmission Protection Systems.

Requirements: The owner shall have a documented maintenance program with test intervals. The owner must keep records showing that the maintenance was performed at the specified intervals.

2.2 Protection System Definition

The most recently approved definition of Protection Systems is:

- Protective relays which respond to electrical quantities,
- communications ~~systems~~Systems necessary for correct operation of protective functions,
- voltage and current sensing devices providing inputs to protective relays,
- station dc supply associated with protective functions (including station batteries, battery chargers, and non-battery-based dc supply), and
- control circuitry associated with protective functions through the trip coil(s) of the circuit breakers or other interrupting devices.

2.3 Applicability of New Protection System Maintenance Standards

The BES purpose is to transfer bulk power. The applicability language has been changed from the original PRC-005:

"...affecting the reliability of the Bulk Electric System (BES)…"

To the present language:

"…that are installed for the purpose of detecting ~~faults~~Faults on BES Elements (lines, buses, transformers, etc.)."

The drafting team intends that this ~~Standard~~standard will follow with any definition of the Bulk Electric System. There should be no ambiguity; if the ~~element~~Element is a BES ~~element~~Element, then the Protection System protecting that ~~element~~Element should then be included within this ~~Standard.~~standard. If there is regional variation to the definition, then there will be a corresponding regional variation to the Protection Systems that fall under this ~~Standard~~standard.

There is no way for the Standard Drafting Team to know whether a specific 230KV line, 115KV line (even 69KV line), for example, should be included or excluded. Therefore, the team set the clear intent that the ~~Standard~~standard language should simply be applicable to Protection Systems for BES ~~elements~~Elements.

The BES is a NERC defined term that, from time to time, may undergo revisions. Additionally, there may even be regional variations that are allowed in the present and future definitions. See the NERC ~~glossary~~Glossary of ~~terms~~Terms for the present, in-force~~,~~ definition. See the applicable ~~regional reliability organization~~Regional Reliability Organization for any applicable allowed variations.

While this ~~Standard~~standard will undergo revisions in the future, this ~~Standard~~standard will not attempt to keep up with revisions to the NERC definition of BES, but, rather, simply make BES Protection Systems applicable.

The Standard is applied to Generator Owners (GO) and Transmission Owners (TO) because ~~GO's~~GOs and ~~TO's~~TOs have equipment that is BES equipment. The ~~Standard~~standard brings in Distribution Providers (DP) because, depending on the station configuration of a particular substation, there may be Protection System equipment installed at a non-transmission voltage level (Distribution Provider equipment) that is wholly or partially installed to protect the BES. PRC-005-2 would apply to this equipment. An example is ~~underfrequency load~~Underfrequency Load-shedding, which is frequently applied well down into the distribution system to meet PRC-007-0.

As this ~~Standard~~standard is intended to replace the existing PRC-005, PRC-008, PRC-011 and PRC-017, those ~~Standards~~standards are used in the construction of this revision of PRC-005-1. Much of the original intent of those ~~Standards~~standards was carried forward whenever it was possible to continue the intent without a disagreement with FERC Order 693. For example, the original PRC-008 was constructed quite differently than the original PRC-005. The drafting team agrees with the intent of this and notes that distributed tripping schemes would have to exhibit multiple failures to trip before they would prove to be significant, as opposed to a single failure to trip of, for example, a Transmission Protection System Bus Differential lock-out relay. While many failures of these distribution breakers could add up to be significant, it is also believed that distribution breakers are operated often on just ~~fault~~Fault clearing duty; and, therefore, the distribution circuit breakers are operated at least as frequently as stipulated in any ~~requirements that might have appeared~~requirement in this ~~Standard~~standard.

Additionally, since this ~~Standard~~standard will now replace PRC-011, it will be important to make the distinction between under-voltage Protection Systems that protect individual ~~loads~~Loads and Protection Systems that are UVLS schemes that protect the BES. Any UVLS scheme that had been applicable under PRC-011 will now be applicable under this revision of PRC-005-1. An example of an Under-Voltage Load-Shedding scheme that is not applicable to this ~~Standard~~standard is one in which the tripping action was intended to prevent low distribution voltage to a specific ~~load~~Load from a ~~transmission system~~Transmission System that was intact except for the line that was out of service, as opposed to preventing a ~~cascading~~Cascading outage or ~~transmission system~~Transmission System collapse.

It had been correctly noted that the devices needed for PRC-011 are the very same types of devices needed in PRC-005.

Thus, a ~~Standard~~standard written for Protection Systems of the BES can easily make the needed requirements for Protection Systems, and replace some other ~~Standards~~standards at the same time.

2.3.1 Frequently Asked Questions:

What~~,~~ exactly~~,~~ is the BES, or Bulk Electric System?

BES is the abbreviation for Bulk Electric System. BES is a term in the Glossary of Terms used in Reliability Standards, and is not being modified within this draft ~~Standard~~standard.
NERC's approved definition of Bulk Electric System is:

As defined by the Regional Reliability Organization, the electrical generation resources, transmission lines, ~~interconnections~~Interconnections with neighboring ~~systems~~Systems, and associated equipment, generally operated at voltages of 100 kV or higher. Radial transmission facilities serving only ~~load~~Load with one transmission source are generally not included in this definition.

The BES definition is presently undergoing the process of revision.

Each ~~Regional Entity~~regional entity implements a definition of the Bulk Electric System that is based on this NERC definition~~,~~; in some cases, supplemented by additional criteria. These regional definitions have been documented and provided to FERC as part of a *June 14, 2007 Informational Filing*.

Why is Distribution Provider included within the Applicable Entities and as a responsible entity within several of the requirements? Wouldn't anyone having relevant facilities be a Transmission Owner?

Depending on the station configuration of a particular substation, there may be Protection System equipment installed at a non-transmission voltage level (Distribution Provider equipment) that is wholly or partially installed to protect the BES. PRC-005-2 would apply to this equipment. An example is ~~underfrequency load~~Underfrequency Load-shedding, which is frequently applied well down into the distribution system to meet PRC-007-0.

We have an Under Voltage Load-Shedding (UVLS) system in place that prevents one of our distribution substations from supplying extremely low voltage in the case of a specific transmission line outage. The transmission line is part of the BES. Does this mean that our UVLS system falls within this ~~Standard~~standard?

The situation, as stated, indicates that the tripping action was intended to prevent low distribution voltage to a specific ~~load~~Load from a ~~transmission system~~Transmission System that was intact, except for the line that was out of service, as opposed to preventing ~~cascading~~Cascading outage or ~~transmission system~~Transmission System collapse.
This ~~Standard~~standard is not applicable to this UVLS.

We have a UFLS or UVLS scheme that sheds the necessary ~~load~~Load through distribution-side circuit breakers and circuit reclosers. Do the trip-test requirements for circuit breakers apply to our situation?

No. Distributed tripping schemes would have to exhibit multiple failures to trip before they would prove to be significant, as opposed to a single failure to trip of, for example, a Transmission Protection System Bus Differential lock-out relay. While many failures of these distribution breakers could add up to be significant, it is also believed that distribution breakers are operated often on just ~~fault~~Fault clearing duty; and, therefore, the distribution circuit breakers are operated at least as frequently as any requirements that might have appeared in this ~~Standard~~standard.

We have a UFLS scheme that, in some locales, sheds the necessary ~~load~~Load through non-BES circuit breakers and, occasionally, even circuit switchers. Do the trip-test requirements for circuit breakers apply to our situation?

If your "non-BES circuit breaker" has been brought into this standard by the inclusion of UFLS requirements, and otherwise would not have been brought into this standard, then the answer is that there are no trip-test requirements. For these devices that are otherwise non-BES assets, these tripping schemes would have to exhibit multiple failures to trip before they would prove to be as significant as~~(~~, for example~~)~~, a single failure to trip of a Transmission Protection System Bus Differential lock-out relay.

2.4 Applicable Relays

The NERC Glossary definition has a Protection System including relays, dc supply, current and voltage sensing devices, dc control circuitry and associated communications circuits. The relays to which this ~~Standard~~standard applies are those protective relays that respond to electrical quantities and provide a trip output to trip coils, dc control circuitry or associated communications equipment. This definition extends to IEEE ~~device #~~Device No. 86 (lockout relay) and IEEE ~~device #~~Device No. 94 (tripping or trip-free relay~~)~~), as these devices are tripping relays that respond to the trip signal of the protective relay that processed the signals from the current and voltage-sensing devices.

Relays that respond to non-electrical inputs or impulses (such as, but not limited to, vibration, pressure, seismic, thermal or gas accumulation) are not included.

2.4.1 Frequently Asked Questions:

Are power circuit reclosers, reclosing relays, closing circuits and auto-restoration schemes covered in this Standard?

No. This ~~Standard~~standard covers protective relays that use electrical quantity measurements to determine anomalies and to trip a portion of the BES. Reclosers, reclosing relays, closing circuits and auto-restoration schemes are used to cause devices to close, as opposed to electrical-measurement relays and their associated circuits that cause circuit interruption from the BES; such closing devices and schemes are more appropriately covered under other NERC ~~Standards.~~standards. There is one notable exception: ~~since~~Since PRC-017 will be superseded by PRC-005-2, then if a Special Protection System (previously covered by PRC-017) incorporates automatic closing of breakers, then the SPS-related closing devices must be tested accordingly.

I use my protective relays only as sources of metered quantities and breaker status for SCADA and EMS through a substation distributed RTU or data concentrator to the control center. What are the maintenance requirements for the relays?

This ~~Standard~~standard addresses Protection Systems that are installed for the purpose of detecting Faults on BES Elements (lines, buses, transformers, etc~~.)~~.). Protective relays, providing only the functions mentioned in the question, are not included.

Is a Sudden Pressure Relay an auxiliary tripping relay?

No. IEEE C37.2-2008 assigns the ~~device number~~Device No.# 94 to auxiliary tripping relays. Sudden pressure relays are assigned ~~device number~~Device No.# 63. Sudden pressure relays are presently excluded from the ~~Standard~~standard because it does not utilize voltage and/or current measurements to determine anomalies. Devices that use anything other than electrical detection means are excluded. The trip path from a sudden pressure device is a part of the Protection System control circuitry. The sensing ~~element~~Element is omitted from PRC-005-2 testing requirements because the SDT is unaware of industry-recognized testing protocol for the sensing ~~elements~~Elements. The SDT believes that Protection Systems that trip (or can trip) the BES should be included. This position is consistent with the currently-approved PRC-005-1a, consistent with the SAR for Project 2007-17, and understands this to be consistent with the position of FERC staff.

My mechanical device does not operate electrically and does not have calibration settings; what maintenance activities apply?

You must conduct a test(s) to verify the integrity of any trip circuit that is a part of a Protection System. This ~~Standard~~standard does not cover circuit breaker maintenance or transformer maintenance. The ~~Standard~~standard also does not presently cover testing of devices, such as sudden pressure relays (63), temperature relays (49), and other relays which respond to mechanical parameters, rather than electrical parameters. There is an expectation that ~~fault~~Fault pressure relays and other non-electrically initiated devices may become part of some maintenance standard. This ~~Standard~~standard presently covers trip paths. It might seem incongruous to test a trip path without a present requirement to test the device; and, thus, be arguably more work for nothing. But~~,~~ one simple test to verify the integrity of such a trip path could be (but is not limited to) a voltage presence test, as a dc voltage monitor might do if it were installed monitoring that same circuit.

The ~~Standard~~standard specifically mentions auxiliary and lock-out relays~~; what~~. What is an auxiliary tripping relay?

An auxiliary relay, IEEE Device ~~Number~~No.# 94, is described in IEEE Standard C37.2-2008 as: "A device that functions to trip a circuit breaker, contactor, or equipment; to permit immediate tripping by other devices; or to prevent immediate reclosing of a circuit interrupter if it should open automatically, even though its closing circuit is maintained closed."

What is a lock-out relay?

A lock-out relay, IEEE Device ~~Number~~No.# 86, is described in IEEE Standard C37.2 as: "A device that trips and maintains the associated equipment or devices inoperative until it is reset by an operator, either locally or remotely."

3. Protection Systems Product Generations

The likelihood of failure and the ability to observe the operational state of a critical Protection System~~,~~ both depends on the technological generation of the relays, as well as how long they have been in service. Unlike many other transmission asset groups, protection and control ~~systems~~Systems have seen dramatic technological changes spanning several generations. During the past 20 years, major functional advances are primarily due to the introduction of microprocessor technology for power system devices, such as primary measuring relays, monitoring devices, control ~~systems~~Systems, and telecommunications equipment.

Modern microprocessor-based relays have six significant traits that impact a maintenance strategy:

- Self monitoring capability - the processors can check themselves, peripheral circuits, and some connected substation inputs and outputs, such as trip coil continuity. Most relay users are aware that these relays have self monitoring, but are not focusing on exactly what internal functions are actually being monitored. As explained further below, every ~~element~~Element critical to the Protection System must be monitored, or else verified periodically.
- Ability to capture ~~fault~~Fault records showing how the Protection System responded to a ~~fault~~Fault in its zone of protection, or to a nearby ~~fault~~Fault for which it is required not to operate.
- Ability to meter currents and voltages, as well as status of connected circuit breakers, continuously during non-~~fault~~Fault times. The relays can compute values, such as MW and MVAR line flows, that are sometimes used for operational purposes, such as SCADA.
- Data communications via ports that provide remote access to all of the results of Protection System monitoring, recording~~,~~ and measurement.
- Ability to trip or close circuit breakers and switches through the Protection System outputs, on command from remote data communications messages, or from relay front panel button requests.
- Construction from electronic components, some of which have shorter technical life or service life than electromechanical components of prior Protection System generations.

There have been significant advances in the technology behind the other ~~components~~Components of Protection Systems. Microprocessors are now a part of ~~Battery Chargers, Associated Communications Equipment, Voltage~~battery chargers, associated communications equipment, voltage and ~~Current Measuring Devices~~current-measuring devices, and even the control circuitry (in the form of software-latches replacing lock-out relays, etc~~).~~.).

Any Protection System ~~component~~Component can have self-monitoring and alarming capability, not just relays. Because of this technology, extended time intervals can find their way into all ~~components~~Components of the Protection System.

This standard also recognizes the distinct advantage of using advanced technology to justifiably defer or even eliminate traditional maintenance. Just as a hand-held calculator does not require routine testing and calibration, neither does a calculation buried in a microprocessor-

based device that results in a "lock-out~~".~~." Thus, the software-latch 86 that replaces an electro-mechanical 86 does not require routine trip testing. Any trip circuitry associated with the "soft 86" would still need applicable verification activities performed, but the actual "86" does not have to be "electrically operated" or even toggled.

4. Definitions

Protection System Maintenance Program (PSMP) — An ongoing program by which Protection System ~~components~~Components are kept in working order and proper operation of malfunctioning ~~components~~Components is restored. A maintenance program for a specific ~~component~~Component includes one or more of the following activities:

- Verify — Determine that the ~~component~~Component is functioning correctly.
- Monitor — Observe the routine in-service operation of the ~~component~~Component.
- Test — Apply signals to a ~~component~~Component to observe functional performance or output behavior, or to diagnose problems.
- Inspect — Detect visible signs of ~~component~~Component failure, reduced performance and degradation.
- Calibrate — Adjust the operating threshold or measurement accuracy of a measuring element to meet the intended performance requirement.

4.1 Frequently Asked Questions:

Why does PRC-005-2 not specifically require maintenance and testing procedures, as reflected in the previous ~~Standard~~standard, PRC-005-1?

PRC-005-1 does not require detailed maintenance and testing procedures, but instead requires summaries of such procedures, and is not clear on what is actually required. PRC-005-2 requires a documented maintenance program, and is focused on establishing requirements rather than prescribing methodology to meet those requirements. Between the activities identified in the ~~tables~~Tables 1-1 through 1-5, Table 2 and Table 3 (collectively the "Tables"), and the various ~~components~~Components of the definition established for a "Protection System Maintenance Program~~",~~," PRC-005-2 establishes the activities and time ~~-~~basis for a Protection System Maintenance Program to a level of detail not previously required.

Please clarify what is meant by "restore" in the definition of maintenance.

The description of "~~Restore~~restore" in the definition of a Protection System Maintenance Program~~,~~ addresses corrective activities necessary to assure that the ~~component~~Component is returned to working order following the discovery of its failure or malfunction. The Maintenance Activities specified in the Tables do not present any requirements related to Restoration; R5 of the ~~Standard~~standard does require that the entity "shall demonstrate efforts to correct any identified ~~unresolved maintenance issues".~~Unresolved Maintenance Issues." Some examples of restoration (or correction of ~~maintenance correctable issues~~Unresolved Maintenance Issues) include, but are not limited to, replacement of capacitors in distance relays to bring them to working order; replacement of relays, or other Protection System ~~components~~Components, to bring the Protection System to working order; upgrade of electromechanical or solid-state protective relays to ~~micro processor~~ microprocessor-based relays following the discovery of failed ~~components~~Components. Restoration, as used in this context, is not to be confused with ~~Restoration~~restoration rules as used in system operations. Maintenance activity necessarily includes both the detection of problems and the repairs needed to eliminate those problems. This ~~Standard~~standard does not identify all of the

Protection System problems that must be detected and eliminated, rather it is the intent of this ~~Standard~~standard that an entity determines the necessary working order for their various devices, and keeps them in working order. If an equipment item is repaired or replaced, then the entity can restart the maintenance-time-interval-clock, if desired~~,~~; however, the replacement of equipment does not remove any documentation requirements that would have been required to verify compliance with time-interval requirements~~; in~~. In other words, do not discard maintenance data that goes to verify your work.

The retention of documentation for new and/or replaced equipment is all about proving that the maintenance intervals had been in compliance. For example, a long-range plan of upgrades might lead an entity to ignore required maintenance; retaining the evidence of prior maintenance that existed before any retirements and upgrades proves compliance with the ~~Standard~~standard.

Please clarify what is meant by "...demonstrate efforts to correct an ~~unresolved maintenance issue~~Unresolved Maintenance Issue..."; why not measure the completion of the corrective action?

Management of completion of the identified ~~unresolved maintenance issue~~Unresolved Maintenance Issue is a complex topic that falls outside of the scope of this standard. There can be any number of supply, process and management problems that make setting repair deadlines impossible. The SDT specifically chose the phrase "demonstrate efforts to correct" (with guidance from NERC Staff) because of the concern that many more complex ~~unresolved maintenance issues~~Unresolved Maintenance Issues might require greater than the remaining maintenance interval to resolve (and yet still be a "closed-end process"). For example, a problem might be identified on a VRLA battery during a ~~6~~ six-month check. In instances such as one that requiring battery replacement as part of the long-term resolution, it is highly unlikely that the battery could be replaced in time to meet the ~~6~~ six-calendar-month requirement for this maintenance activity. The SDT does not believe entities should be found in violation of a maintenance program requirement because of the inability to complete a remediation program within the original maintenance interval. The SDT does believe corrective actions should be timely, but concludes it would be impossible to postulate all possible remediation projects; and, therefore, impossible to specify bounding time frames for resolution of all possible ~~unresolved maintenance issues~~Unresolved Maintenance Issues, or what documentation might be sufficient to provide proof that effective corrective action is being undertaken.

5. Time-Based Maintenance (~~TMB~~TBM) Programs

Time-based maintenance is the process in which Protection Systems are maintained or verified according to a time schedule. The scheduled program often calls for technicians to travel to the physical site and perform a functional test on Protection System ~~components.~~Components. However, some ~~components~~Components of a TBM program may be conducted from a remote location - for example, tripping a circuit breaker by communicating a trip command to a microprocessor relay to determine if the entire Protection System tripping chain is able to operate the breaker. Similarly, all Protection System ~~components~~Components can have the ability to remotely conduct tests, either on-command or routinely~~,~~; the running of these tests can extend the time interval between hands-on maintenance activities.

5.1 Maintenance Practices

Maintenance and testing programs often incorporate the following types of maintenance practices:

- TBM – time-based maintenance – externally prescribed maximum maintenance or testing intervals are applied for ~~components~~Components or groups of ~~components~~Components. The intervals may have been developed from prior experience or manufacturers' recommendations. The TBM verification interval is based on a variety of factors, including experience of the particular asset owner, collective experiences of several asset owners who are members of a country or regional council, etc. The maintenance intervals are fixed~~,~~ and may range in number of months or in years.

  TBM can include review of recent power system events near the particular terminal. Operating records may verify that some portion of the Protection System has operated correctly since the last test occurred. If specific protection scheme ~~components~~Components have demonstrated correct performance within specifications, the maintenance test time clock can be reset for those ~~components~~Components.

- PBM – Performance-Based Maintenance - intervals are established based on analytical or historical results of TBM failure rates on a statistically significant population of similar ~~components~~Components. Some level of TBM is generally followed. Statistical analyses accompanied by adjustments to maintenance intervals are used to justify continued use of PBM-developed extended intervals when test failures or in-service failures occur infrequently.

- CBM – condition-based maintenance – continuously or frequently reported results from non-disruptive self monitoring of ~~components~~Components demonstrate operational status as those ~~components~~Components remain in service. Whatever is verified by CBM does not require manual testing, but taking advantage of this requires precise technical focus on exactly what parts are included as part of the self diagnostics. While the term "Condition-Based-Maintenance" (CBM) is no longer used within the ~~Standard~~standard itself, it is important to note that the concepts of CBM are a part of the ~~Standard~~standard (in the form of extended time intervals through status-monitoring). These extended time intervals are only allowed (in the absence of PBM) if the condition of the device is monitored (CBM). As a consequence of the "monitored-basis-time-

intervals" existing within the ~~Standard~~standard, the explanatory discussions within this Supplementary Reference concerned with CBM will remain in this reference and are discussed as CBM.

Microprocessor-based Protection System ~~components~~Components that perform continuous self-monitoring verify correct operation of most ~~components~~Components within the device. Self-monitoring capabilities may include battery continuity, float voltages, unintentional grounds, the ac signal inputs to a relay, analog measuring circuits, processors and memory for measurement, protection, and data communications, trip circuit monitoring, and protection or data communications signals (and many, many more measurements). For those conditions, failure of a self-monitoring routine generates an alarm and may inhibit operation to avoid false trips. When internal ~~components~~Components, such as critical output relay contacts, are not equipped with self-monitoring, they can be manually tested. The method of testing may be local or remote, or through inherent performance of the scheme during a system event.

The TBM is the overarching maintenance process of which the other types are subsets. Unlike TBM, PBM intervals are adjusted based on good or bad experiences. The CBM verification intervals can be hours, or even milliseconds between non-disruptive self-monitoring checks within or around ~~components~~Components as they remain in service.

TBM, PBM, and CBM can be combined for individual ~~components~~Components, or within a complete Protection System. The following diagram illustrates the relationship between various types of maintenance practices described in this section. In the Venn diagram, the overlapping regions show the relationship of TBM with PBM historical information and the inherent continuous monitoring offered through CBM.

This figure shows:

- Region 1: The TBM intervals that are increased based on known reported operational condition of individual ~~components~~Components that are monitoring themselves.
- Region 2: The TBM intervals that are adjusted up or down based on results of analysis of maintenance history of statistically significant population of similar products that have been subject to TBM.
- Region 3: Optimal TBM intervals based on regions 1 and 2.

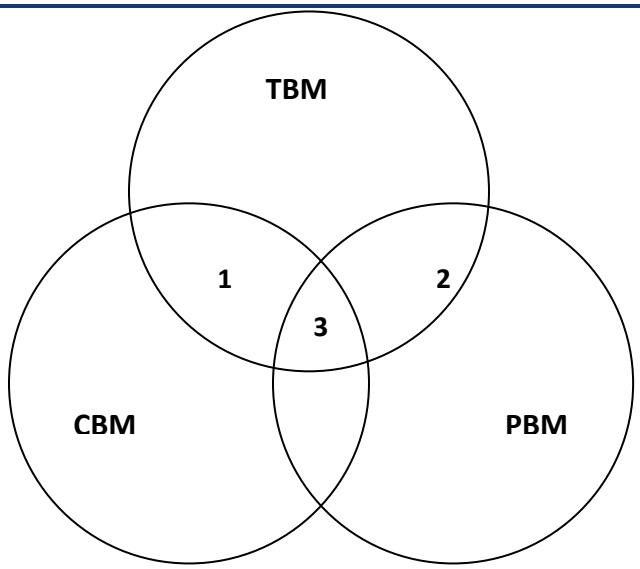

Relationship of time-based maintenance types

5.1.1 Frequently Asked Questions:

The ~~Standard~~standard seems very complicated, and is difficult to understand. Can it be simplified?

Because the ~~Standard~~standard is establishing parameters for condition-based Maintenance (R1) and Performance-Based Maintenance (R2~~)~~), in addition to simple time-based Maintenance, it does appear to be complicated. At its simplest, an entity needs to ONLY perform time-based maintenance according to the unmonitored rows of the Tables. If an entity then wishes to take advantage of monitoring on its Protection System ~~components~~Components and its available lengthened time intervals, then it may, as long as the ~~component~~Component has the listed monitoring attributes. If an entity wishes to use historical performance of its Protection System ~~components~~Components to perform Performance-Based Maintenance, then R2 applies.

Please see the following diagram, which provides a "flow chart" of the ~~Standard~~standard.

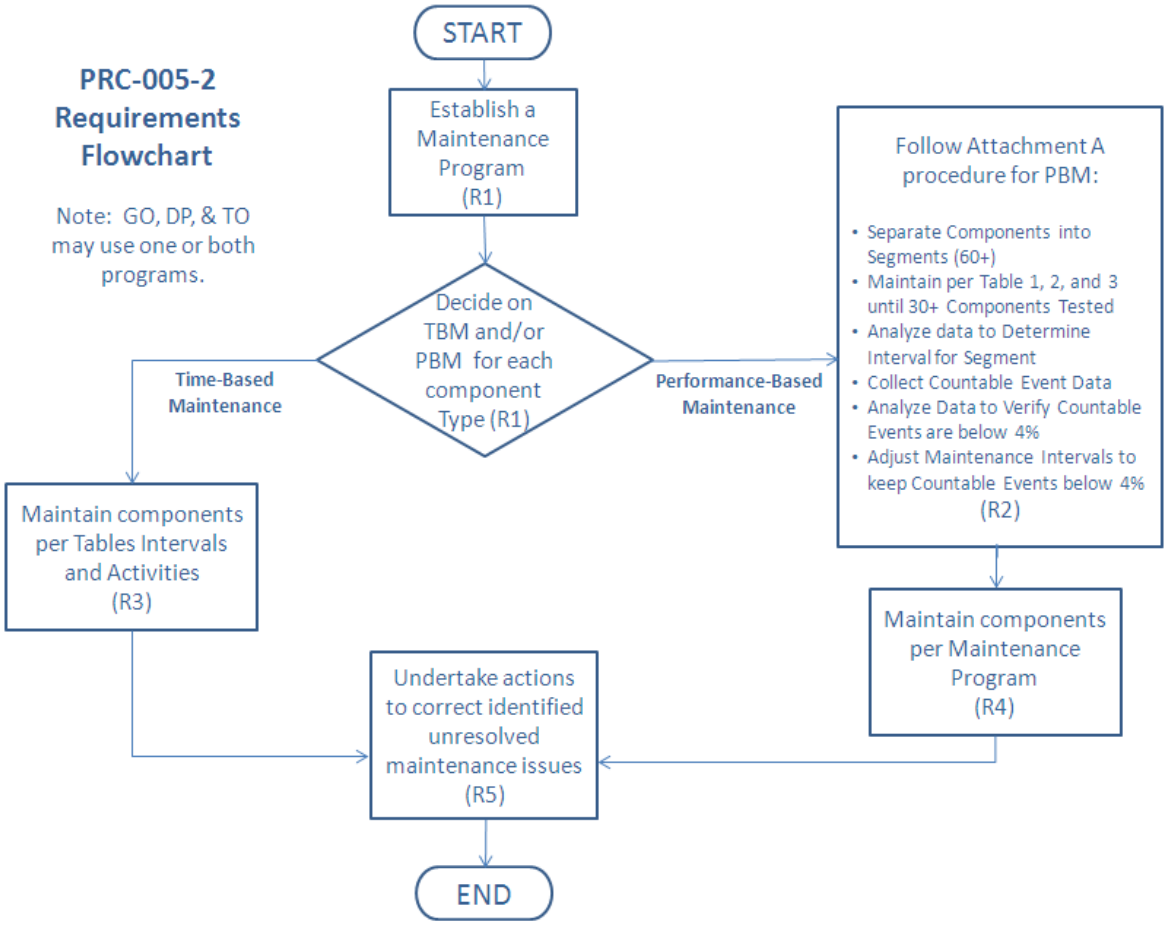

We have an electromechanical (unmonitored) relay that has a trip output to a lockout relay (unmonitored) which trips our transformer off-line by tripping the transformer's high-side and low-side circuit breakers. What testing must be done for this system?

This system is made up of ~~components~~Components that are all unmonitored. Assuming a time-based Protection System maintenance program schedule (as opposed to a Performance-Based maintenance program), each ~~component~~Component must be maintained per the most frequent hands-on activities listed in the Tables.

5.2 Extending Time-Based Maintenance

All maintenance is fundamentally time-based. Default time-based intervals are commonly established to assure proper functioning of each ~~component~~Component of the Protection System, when data on the reliability of the ~~components~~Components is not available other than observations from time-based maintenance. The following factors may influence the established default intervals:

- If continuous indication of the functional condition of a ~~component~~Component is available (from relays or chargers or any self-monitoring device), then the intervals may be extended, or manual testing may be eliminated. This is referred to as condition-based maintenance or CBM. CBM is valid only for precisely the ~~components~~Components subject to monitoring. In the case of microprocessor-based

relays, self-monitoring may not include automated diagnostics of every ~~component~~Component within a microprocessor.

- Previous maintenance history for a group of ~~components~~Components of a common type may indicate that the maintenance intervals can be extended, while still achieving the desired level of performance. This is referred to as Performance-Based Maintenance, or PBM. It is also sometimes referred to as reliability-centered maintenance, or RCM~~,~~; but PBM is used in this document.
- Observed proper operation of a ~~component~~Component may be regarded as a maintenance verification of the respective ~~component~~Component or element in a microprocessor-based device. For such an observation, the maintenance interval may be reset only to the degree that can be verified by data available on the operation. For example, the trip of an electromechanical relay for a ~~fault~~Fault verifies the trip contact and trip path, but only through the relays in series that actually operated; one operation of this relay cannot verify correct calibration.

Excessive maintenance can actually decrease the reliability of the ~~component~~Component or system. It is not unusual to cause failure of a ~~component~~Component by removing it from service and restoring it. The improper application of test signals may cause failure of a ~~component~~Component. For example, in electromechanical overcurrent relays, test currents have been known to destroy convolution springs.

In addition, maintenance usually takes the ~~component~~Component out of service, during which time it is not able to perform its function. Cutout switch failures, or failure to restore switch position, commonly lead to protection failures.

5.2.1 Frequently Asked ~~Question~~Questions:

If I show the protective device out of service while it is being repaired, then can I add it back as a new protective device when it returns? If not, my relay testing history would show that I was out of compliance for the last maintenance cycle.

The maintenance and testing requirements (R5) (in essence) state "…shall demonstrate efforts to correct any identified ~~unresolved maintenance issues.~~Unresolved Maintenance Issues." The type of corrective activity is not stated; however it could include repairs or replacements.

Your documentation requirements will increase, of course, to demonstrate that your device tested bad and had corrective actions initiated. Your regional entity could very well ask for documentation showing status of your corrective actions.

6. Condition-Based Maintenance (CBM) Programs

Condition-based maintenance is the process of gathering and monitoring the information available from modern microprocessor-based relays and other intelligent electronic devices (IEDs) that monitor Protection System ~~elements~~Elements. These devices generate monitoring information during normal operation, and the information can be assessed at a convenient location remote from the substation. The information from these relays and IEDs is divided into two basic types:

1. Information can come from background self-monitoring processes, programmed by the manufacturer, or by the user in device logic settings. The results are presented by alarm contacts or points, front panel indications, and by data communications messages.
2. Information can come from event logs, captured files, and/or oscillographic records for ~~faults~~Faults and ~~disturbances~~Disturbances, metered values, and binary input status reports. Some of these are available on the device front panel display, but may be available via data communications ports. Large files of ~~fault~~Fault information can only be retrieved via data communications. These results comprise a mass of data that must be further analyzed for evidence of the operational condition of the Protection System.

Using these two types of information, the user can develop an effective maintenance program carried out mostly from a central location remote from the substation. This approach offers the following advantages:

1. **Non-invasive Maintenance:** The system is kept in its normal operating state, without human intervention for checking. This reduces risk of damage, or risk of leaving the system in an inoperable state after a manual test. Experience has shown that keeping human hands away from equipment known to be working correctly enhances reliability.
2. **Virtually Continuous Monitoring:** CBM will report many hardware failure problems for repair within seconds or minutes of when they happen. This reduces the percentage of problems that are discovered through incorrect relaying performance. By contrast, a hardware failure discovered by TBM may have been there for much of the time interval between tests, and there is a good chance that some devices will show health problems by incorrect operation before being caught in the next test round. The frequent or continuous nature of CBM makes the effective verification interval far shorter than any required TBM maximum interval.

To use the extended time intervals available through Condition Based Maintenance, simply look for the rows in the Tables that refer to monitored items.

6.1 Frequently Asked Questions:

My microprocessor relays and dc circuit alarms are contained on relay panels in a 24-hour attended control room. Does this qualify as an extended time interval condition-based (monitored) system?

Yes, provided the station attendant (plant operator, etc.) monitors the alarms and other indications (comparable to the monitoring attributes) and reports them within the given time limits that are stated in the criteria of the Tables.

When documenting the basis for inclusion of ~~components~~Components into the appropriate levels of monitoring, as per Requirement R1 (Part 1.4) of the ~~Standard~~standard, is it necessary to provide this documentation about the device by listing of every ~~component~~Component and the specific monitoring attributes of each device?

No. While maintaining this documentation on the device level would certainly be permissible, it is not necessary. Global statements can be made to document appropriate levels of monitoring for the entire population of a ~~component~~Component type or portion thereof.

For example, it would be permissible to document the conclusion that all BES substation dc supply battery chargers are ~~Monitored~~monitored by stating the following within the program description:

> "All substation dc supply battery chargers are considered ~~Monitored~~monitored and subject to the rows for monitored equipment of Table 1-4 requirements, as all substation dc supply battery chargers are equipped with dc voltage alarms and ground detection alarms that are sent to the manned control center."

Similarly, it would be acceptable to use a combination of a global statement and a device-level list of exclusions. Example:

> "Except as noted below, all substation dc supply battery chargers are considered ~~Monitored~~monitored and subject to the rows for monitored equipment of Table 1-4 requirements, as all substation dc supply battery chargers are equipped with dc voltage alarms and ground detection alarms that are sent to the manned control center. The dc supply battery chargers of Substation X, Substation Y, and Substation Z are considered ~~Unmonitored~~unmonitored and subject to the rows for unmonitored equipment in Table 1-4 requirements, as they are not equipped with ground detection capability."

Regardless whether this documentation is provided by device listing of monitoring attributes, by global statements of the monitoring attributes of an entire population of ~~component~~Component types, or by some combination of these methods, it should be noted that auditors may request supporting drawings or other documentation necessary to validate the inclusion of the device(s) within the appropriate level of monitoring. This supporting background information need not be maintained within the program document structure, but should be retrievable if requested by an auditor.

7. Time-Based Versus Condition-Based Maintenance

Time-based and condition-based (or monitored) maintenance programs are both acceptable, if implemented according to technically sound requirements. Practical programs can employ a *combination of time-based and condition-based maintenance.* The ~~Standard~~standard requirements introduce the concept of optionally using condition monitoring as a documented element of a maintenance program.

The Federal Energy Regulatory Commission (FERC), in its Order Number 693 Final Rule, dated March 16, 2007 (18 CFR Part 40, Docket No. RM06-16-000) on Mandatory Reliability Standards for the Bulk-Power System, directed NERC to submit a modification to PRC-005-1 that includes a requirement that maintenance and testing of a Protection System must be carried out within a maximum allowable interval that is appropriate to the type of the Protection System and its impact on the reliability of the Bulk Power System. Accordingly, this Supplementary Reference Paper refers to the specific maximum allowable intervals in PRC-005-2. The defined time limits allow for longer time intervals if the maintained ~~component~~Component is monitored.

A key feature of condition-based monitoring is that it effectively reduces the time delay between the moment of a protection failure and time the Protection System owner knows about it, for the monitored segments of the Protection System. In some cases, the verification is practically continuous - the time interval between verifications is minutes or seconds. Thus, technically sound, condition-based verification, meets the verification requirements of the FERC order even more effectively than the strictly time-based tests of the same system ~~components~~Components.

The result is that:

This NERC ~~Standard~~standard permits utilities to use a technically sound approach and to take advantage of remote monitoring, data analysis, and control capabilities of modern Protection Systems to reduce the need for periodic site visits and invasive testing of ~~components~~Components by on-site technicians. This periodic testing must be conducted within the maximum time intervals specified in Tables 1-1 through 1-5 and Table 2 of PRC-005-2.

7.1 Frequently Asked Questions:

What is a Calendar Year?

Calendar Year - January 1 through December 31 of any year. As an example, if an event occurred on June 17, 2009 and is on a "One Calendar Year Interval~~",~~," the next event would have to occur on or before December 31, 2010.

Please provide an example of "4 Calendar Months".

If a maintenance activity is described as being needed every ~~4~~four Calendar Months then it is performed in a (given) month and due again ~~4~~four months later. For example a battery bank is inspected in month number 1 then it is due again before the end of the month number5. And specifically consider that you perform your battery inspection on January 3, 2010 then it must be inspected again before the end of May. Another example could be that a ~~4~~four-month

inspection was performed in January is due in May, but if performed in March (instead of May) would still be due four months later therefore the activity is due again July. Basically every "~~4Calendar~~four Calendar Months" means to add ~~4~~four months from the last time the activity was performed.

Please provide an example of the unmonitored versus other levels of monitoring available?

An unmonitored Protection System has no monitoring and alarm circuits on the Protection System ~~components.~~Components. A Protection System ~~component~~Component that has monitoring attributes but no alarm output connected is considered to be unmonitored.

A monitored Protection System or an individual monitored ~~component~~Component of a Protection System has monitoring and alarm circuits on the Protection System ~~components.~~Components. The alarm circuits must alert, within 24 hours, a location wherein corrective action can be initiated. This location might be, but is not limited to, an Operations Center, Dispatch Office, Maintenance Center or even a portable SCADA system.

There can be a combination of monitored and unmonitored Protection Systems within any given scheme, substation or plant; there can also be a combination of monitored and unmonitored ~~components~~Components within any given Protection System.

Example #1: A combination of monitored and unmonitored ~~components~~Components within a given Protection System might be:

- A microprocessor relay with an internal alarm connected to SCADA to alert 24-hr staffed operations center; it has internal self diagnosis and alarming. (monitored)
- Instrumentation transformers, with no monitoring, connected as inputs to that relay. (unmonitored)
- A ~~Vented~~vented Lead-Acid battery with a low voltage alarm for the station dc supply voltage and an unintentional grounds detection alarm connected to SCADA. (monitoring varies)
- A circuit breaker with a trip coil, and the trip circuit is not monitored. (unmonitored)

Given the particular ~~components~~Components and conditions, and using Table 1 and Table 2, the particular ~~components~~Components have maximum activity intervals of:

Every ~~4~~four calendar months, inspect:

- Electrolyte level (station dc supply voltage and unintentional ground detection is being maintained more frequently by the monitoring system).

Every 18 calendar months, verify/inspect the following:

- Battery bank ohmic values to station battery baseline (if performance tests are not opted)
- Battery charger float voltage
- Battery rack integrity
- Cell condition of all individual battery cells (where visible)
- Battery continuity

- Battery terminal connection resistance
- Battery cell-to-cell resistance (where available to measure)

Every ~~6~~six calendar years, perform/verify the following:

- Battery performance test (if internal ohmic tests are not opted)
- Verify that each trip coil is able to operate the circuit breaker, interrupting device, or mitigating device
- For electromechanical lock-out relays, electrical operation of electromechanical trip

Every 12 calendar years, verify the following:

- Microprocessor relay settings are as specified
- Operation of the microprocessor's relay inputs and outputs that are essential to proper functioning of the Protection System
- Acceptable measurement of power ~~system~~System input values seen by the microprocessor protective relay
- Verify that current and voltage signal values are provided to the protective relays
- Protection System ~~component~~Component monitoring for the battery system signals are conveyed to a location where corrective action can be initiated
- The microprocessor relay alarm signals are conveyed to a location where corrective action can be initiated
- Verify all trip paths in the control circuitry associated with protective functions through the trip coil(s) of the circuit breakers or other interrupting devices
- Auxiliary outputs that are in the trip path shall be maintained as detailed in Table 1-5 of the standard under the 'Unmonitored ~~control circuitry associated with protective functions~~Control Circuitry Associated with Protective Functions" section'
- Auxiliary outputs not in a trip path (i.e~~.~~., annunciation or DME input) are not required, by this ~~Standard~~standard, to be checked~~.~~

Example #2: A combination of monitored and unmonitored ~~components~~Components within a given Protection System might be:

- A microprocessor relay with integral alarm that is not connected to SCADA. (unmonitored)
- Current and voltage signal values, with no monitoring, connected as inputs to that relay. (unmonitored)
- A ~~Vented Lead-Acid~~vented lead-acid battery with a low voltage alarm for the station dc supply voltage and an unintentional grounds detection alarm connected to SCADA. (monitoring varies)
- A circuit breaker with a trip coil, with no circuits monitored. (unmonitored)

Given the particular ~~components~~Components and conditions, and using the Table 1 ~~("~~(Maximum Allowable Testing Intervals and Maintenance Activities~~")~~) and Table 2

~~("~~(Alarming Paths and Monitoring~~"),~~), the particular ~~components~~Components have maximum activity intervals of:

Every ~~4~~four calendar months, inspect:

- Electrolyte level (~~Station~~station dc supply voltage and unintentional ground detection is being maintained more frequently by the monitoring system)

Every 18 calendar months, verify/inspect the following:

- Battery bank ohmic values to station battery baseline (if performance tests are not opted)
- Battery charger float voltage
- Battery rack integrity
- Cell condition of all individual battery cells (where visible)
- Battery continuity
- Battery terminal connection resistance
- Battery cell-to-cell resistance (where available to measure)

Every ~~6~~six calendar years, verify/perform the following:

- Verify operation of the relay inputs and outputs that are essential to proper functioning of the Protection System
- Verify acceptable measurement of power system input values as seen by the relays
- Verify that each trip coil is able to operate the circuit breaker, interrupting device, or mitigating device
- For electromechanical lock-out relays, electrical operation of electromechanical trip
- Battery performance test (if internal ohmic tests are not opted)

Every 12 calendar years, verify the following:

- Current and voltage signal values are provided to the protective relays
- Protection System ~~component~~Component monitoring for the battery system signals are conveyed to a location where corrective action can be initiated
- All trip paths in the control circuitry associated with protective functions through the trip coil(s) of the circuit breakers or other interrupting devices
- Auxiliary outputs that are in the trip path shall be maintained, as detailed in Table 1-5 of the standard under the ~~'~~Unmonitored ~~control circuitry associated~~Control Circuitry Associated with ~~protective functions" section'~~Protective Functions" section
- Auxiliary outputs not in a trip path (i.e~~.~~., annunciation or DME input) are not required, by this ~~Standard~~standard, to be checked

Example #3: A combination of monitored and unmonitored ~~components~~Components within a given Protection System might be:

- A microprocessor relay with alarm connected to SCADA to alert 24-hr staffed operations center; it has internal self diagnosis and alarms. (monitored)

- Current and voltage signal values, with monitoring, connected as inputs to that relay (monitored)
- Vented Lead-Acid battery without any alarms connected to SCADA (unmonitored)
- Circuit breaker with a trip coil, with no circuits monitored (unmonitored)

Given the particular ~~components~~Components, conditions, and using the Table 1 ~~("~~(Maximum Allowable Testing Intervals and Maintenance Activities~~")~~) and Table 2 ~~("~~(Alarming Paths and Monitoring~~"),~~), the particular ~~components~~Components shall have maximum activity intervals of:

Every ~~4~~four calendar months, verify/inspect the following:

- Station dc supply voltage
- For unintentional grounds
- Electrolyte level

Every 18 calendar months, verify/inspect the following:

- Battery bank ohmic values to station battery baseline (if performance tests are not opted)
- Battery charger float voltage
- Battery rack integrity
- Battery continuity
- Battery terminal connection resistance
- Battery cell-to-cell resistance (where available to measure)
- Condition of all individual battery cells (where visible)

Every ~~6~~six calendar years, perform/verify the following:

- Battery performance test (if internal ohmic tests are not opted)
- Verify that each trip coil is able to operate the circuit breaker, interrupting device, or mitigating device
- For electromechanical lock-out relays, electrical operation of electromechanical trip

Every 12 calendar years, verify the following:

- The microprocessor relay alarm signals are conveyed to a location where corrective action can be taken
- Microprocessor relay settings are as specified
- Operation of the microprocessor's relay inputs and outputs that are essential to proper functioning of the Protection System
- Acceptable measurement of power system input values seen by the microprocessor protective relay

- Verify all trip paths in the control circuitry associated with protective functions through the trip coil(s) of the circuit breakers or other interrupting devices
- Auxiliary outputs that are in the trip path shall be maintained, as detailed in Table 1-5 of the standard under the ‘Unmonitored ~~control circuitry associated~~Control Circuitry Associated with ~~protective functions" section’~~Protective Functions section
- Auxiliary outputs not in a trip path (i.e. annunciation or DME input) are not required, by this ~~Standard~~standard, to be checked

Why do ~~components~~Components have different maintenance activities and intervals if they are monitored?

The intent behind different activities and intervals for monitored equipment is to allow less frequent manual intervention when more information is known about the condition of Protection System ~~components.~~Components. Condition-Based Maintenance is a valuable asset to improve reliability.

Can all ~~components~~Components in a Protection System be monitored?

No. For some ~~components~~Components in a Protection System, monitoring will not be relevant. For example, a battery will always need some kind of inspection.

We have a 30-year-old oil circuit breaker with a red indicating lamp on the substation relay panel that is illuminated only if there is continuity through the breaker trip coil. There is no SCADA monitor or relay monitor of this trip coil. The line protection relay package that trips this circuit breaker is a microprocessor relay that has an integral alarm relay that will assert on a number of conditions that includes a loss of power to the relay. This alarm contact connects to our SCADA system and alerts our 24-hour operations center of relay trouble when the alarm contact closes. This microprocessor relay trips the circuit breaker only and does not monitor trip coil continuity or other things such as trip current. Are the ~~components~~Components monitored or not? How often must I perform maintenance?

The protective relay is monitored and can be maintained every 12 years, or when an ~~unresolved maintenance issue~~Unresolved Maintenance Issue arises. The control circuitry can be maintained every 12 years. The circuit breaker trip coil(s) has to be electrically operated at least once every ~~6~~six years.

8. Maximum Allowable Verification Intervals

The ~~Maximum Allowable Testing Intervals~~maximum allowable testing intervals and ~~Maintenance Activities~~maintenance activities show how CBM with newer device types can reduce the need for many of the tests and site visits that older Protection System ~~components~~Components require. As explained below, there are some sections of the Protection System that monitoring or data analysis may not verify. Verifying these sections of the Protection Systems requires some persistent TBM activity in the maintenance program. However, some of this TBM can be carried out remotely - for example, exercising a circuit breaker through the relay tripping circuits using the relay remote control capabilities can be used to verify function of one tripping path and proper trip coil operation, if there has been no ~~fault~~Fault or routine operation to demonstrate performance of relay tripping circuits.

8.1 Maintenance Tests

Periodic maintenance testing is performed to ensure that the protection and control system is operating correctly after a time period of field installation. These tests may be used to ensure that individual ~~components~~Components are still operating within acceptable performance parameters - this type of test is needed for ~~components~~Components susceptible to degraded or changing characteristics due to aging and wear. Full system performance tests may be used to confirm that the total Protection System functions from measurement of power system values, to properly identifying ~~fault~~Fault characteristics, to the operation of the interrupting devices.

8.1.1 Table of Maximum Allowable Verification Intervals

Table 1 (collectively known as Table 1, individually called out as Tables 1-1 through 1-5), Table 2 and Table 3 in the ~~Standard,~~standard specify maximum allowable verification intervals for various generations of Protection Systems and categories of equipment that comprise Protection Systems. The right column indicates maintenance activities required for each category.

The types of ~~components~~Components are illustrated in Figures 1 and 2 at the end of this paper. Figure 1 shows an example of telecommunications-assisted transmission Protection System comprising substation equipment at each terminal and a telecommunications channel for relaying between the two substations. Figure 2 shows an example of a generation Protection System. The various ~~subsystems~~sub-Systems of a Protection System that need to be verified are shown.

Non-distributed UFLS, UVLS, and SPS are additional categories of Table 1 that are not illustrated in these figures. Non-distributed UFLS, UVLS and SPS all use identical equipment as Protection Systems in the performance of their functions; and, therefore, have the same maintenance needs.

Distributed UFLS and UVLS ~~systems~~Systems, which use local sensing on the distribution system and trip co-located non-BES interrupting devices, are addressed in Table 3 with reduced maintenance activities.

While it is easy to associate protective relays to multiple levels of monitoring, it is also true that most of the ~~components~~Components that can make up a Protection System can also have technological advancements that place them into higher levels of monitoring.

To use the Maintenance Activities and Intervals Tables from PRC-005-2:

- First find the Table associated with your ~~component.~~Component. The tables are arranged in the order of mention in the definition of Protection System;
    - Table 1-1 is for protective relays,
    - Table 1-2 is for the associated communications ~~systems~~Systems,
    - Table 1-3 is for current and voltage sensing devices,
    - Table 1-4 is for station dc supply and
    - Table 1-5 is for control circuits.
    - Table 2, is for alarms; this was broken out to simplify the other tables.
    - Table 3 is for ~~components~~Components which make-up distributed UFLS and UVLS ~~systems~~Systems.
- Next look within that ~~Table~~table for your device and its degree of monitoring. The ~~tables~~Tables have different hands-on maintenance activities prescribed depending upon the degree to which you monitor your equipment. Find the maintenance activity that applies to the monitoring level that you have on your piece of equipment.
- This Maintenance activity is the minimum maintenance activity that must be documented.
- If your Performance-Based Maintenance (PBM) plan requires more activities, then you must perform and document to this higher standard. (Note that this does not apply unless you utilize PBM.)
- After the maintenance activity is known, check the ~~Maximum Maintenance Interval~~maximum maintenance interval; this time is the maximum time allowed between hands-on maintenance activity cycles of this ~~component~~Component.
- If your Performance-Based Maintenance plan requires activities more often than the Tables maximum, then you must perform and document those activities to your more stringent standard. (Note that this does not apply unless you utilize PBM.)
- Any given ~~component~~Component of a Protection System can be determined to have a degree of monitoring that may be different from another ~~component~~Component within that same Protection System. For example, in a given Protection System it is possible for an entity to have a monitored protective relay and an unmonitored associated communications system; this combination would require hands-on maintenance activity on the relay at least once every 12 years and attention paid to the communications system as often as every ~~4~~four months.
- An entity does not have to utilize the extended time intervals made available by this use of condition-based monitoring. An easy choice to make is to simply utilize the unmonitored level of maintenance made available on each of the ~~5~~five Tables. While the maintenance activities resulting from this choice would require more maintenance man-hours, the maintenance requirements may be simpler to document and the resulting maintenance plans may be easier to create.

For each Protection System ~~component~~Component, Table 1 shows maximum allowable testing intervals for the various degrees of monitoring. These degrees of monitoring, or levels, range from the legacy unmonitored through a system that is more comprehensively monitored.

It has been noted here that an entity may have a PSMP that is more stringent than PRC-005-2. There may be any number of reasons that an entity chooses a more stringent plan than the minimums prescribed within PRC-005-2, most notable of which is an entity using performance based maintenance methodology. If an entity has a Performance-Based Maintenance program, then that plan must be followed, even if the plan proves to be more stringent than the minimums laid out in the Tables.

8.1.2 Additional Notes for Tables 1-1 through 1-5 and Table 3

1. For electromechanical relays, adjustment is required to bring measurement accuracy within the tolerance needed by the asset owner. Microprocessor relays with no remote monitoring of alarm contacts, etc, are unmonitored relays and need to be verified within the Table interval as other unmonitored relays but may be verified as functional by means other than testing by simulated inputs.

2. Microprocessor relays typically are specified by manufacturers as not requiring calibration, but acceptable measurement of power system input values must be verified (verification of the Analog to Digital [A/D] converters) within the Table intervals. The integrity of the digital inputs and outputs that are used as protective functions must be verified within the Table intervals.

3. Any Phasor Measurement Unit (PMU) function whose output is used in a Protection System or SPS (as opposed to a monitoring task) must be verified as a ~~component~~Component in a Protection System.

4. In addition to verifying the circuitry that supplies dc to the Protection System, the owner must maintain the station dc supply. The most widespread station dc supply is the station battery and charger. Unlike most Protection System ~~components~~Components, physical inspection of station batteries for signs of ~~component~~Component failure, reduced performance, and degradation are required to ensure that the station battery is reliable enough to deliver dc power when required. IEEE Standards 450, 1188, and 1106 for ~~Vented Lead-Acid, Valve-Regulated Lead-Acid, and Nickel-Cadmium~~vented lead-acid, valve-regulated lead-acid, and nickel-cadmium batteries, respectively (which are the most commonly used substation batteries on the NERC BES) have been developed as an important reference source of maintenance recommendations. The Protection System owner might use the applicable IEEE recommended practice which contains information and recommendations concerning the maintenance, testing and replacement of its substation battery. However, the methods prescribed in these IEEE recommendations cannot be specifically required because they do not apply to all battery applications.

5. Aggregated small entities might distribute the testing of the population of UFLS/UVLS ~~systems~~Systems, and large entities will usually maintain a portion of these ~~systems~~Systems in any given year. Additionally, if relatively small quantities of such ~~systems~~Systems do not perform properly, it will not affect the integrity of the overall program. Thus, these distributed ~~systems~~Systems have decreased requirements as compared to other Protection Systems.

6. Voltage & Current Sensing Device circuit input connections to the Protection System relays can be verified by (but not limited to) comparison of measured values on live circuits or by using test currents and voltages on equipment out of service for maintenance. The verification process can be automated or manual. The values should be verified to be as expected~~,~~ (phase value and phase relationships are both equally important to verify).

7. "End-to-end test~~"~~," as used in this Supplementary Reference, is any testing procedure that creates a remote input to the local communications-assisted trip scheme. While this can be interpreted as a GPS-type functional test, it is not limited to testing via GPS. Any remote scheme manipulation that can cause action at the local trip path can be used to functionally-test the dc ~~Control Circuitry.~~control circuitry. A documented ~~real~~Real-time trip of any given trip path is acceptable in lieu of a functional trip test. It is possible, with sufficient monitoring, to be able to verify each and every parallel trip path that participated in any given dc Control Circuit trip. Or~~,~~ another possible solution is that a single trip path from a single monitored relay can be verified to be the trip path that successfully tripped during a ~~real~~Real-time operation. The variations are only limited by the degree of engineering and monitoring that an entity desires to pursue.

8. A/D verification may use relay front panel value displays, or values gathered via data communications. Groupings of other measurements (such as vector summation of bus feeder currents) can be used for comparison if calibration requirements assure acceptable measurement of power system input values.

9. Notes 1-8 attempt to describe some testing activities; they do not represent the only methods to achieve these activities, but rather some possible methods. Technological advances, ingenuity and/or industry accepted techniques can all be used to satisfy maintenance activity requirements; the ~~Standard~~standard is technology- and method-neutral in most cases.

8.1.3 Frequently Asked Questions:

What is meant by "Verify that settings are as specified" maintenance activity in Table 1-1?

Verification of settings is an activity directed mostly towards microprocessor- based relays. For relay maintenance departments that choose to test microprocessor-based relays in the same manner as electromechanical relays are tested, the testing process sometimes requires that some specific functions be disabled. Later tests might enable the functions previously disabled, but perhaps still other functions or logic statements were then masked out. It is imperative that, when the relay is placed into service, the settings in the relay be the settings that were intended to be in that relay or as the ~~Standard~~standard states "…settings are as specified."

Many of the microprocessor- based relays available today have software tools which provide this functionality and generate reports for this purpose.

For evidence or documentation of this requirement, a simple recorded acknowledgement that the settings were checked to be as specified is sufficient.

The drafting team was careful not to require "…that the relay settings be correct…" because it was believed that this might then place a burden of proof that the specified settings would

result in the correct intended operation of the interrupting device. While that is a noble intention, the measurable proof of such a requirement is immense. The intent is that settings of the ~~component~~Component be as specified at the conclusion of maintenance activities, whether those settings may have "drifted" since the prior maintenance or whether changes were made as part of the testing process.

Are electromechanical relays included in the "Verify that settings are as specified" maintenance activity in Table 1-1?

Verification of settings is an activity directed towards the application of protection related functions of microprocessor based relays. Electromechanical relays require calibration verification by voltage and/or current injection~~,~~; and, thus, the settings are verified during calibration activity. In the example of a time-overcurrent relay, a minor deviation in time dial, versus the settings, may be acceptable, as long as the relay calibration is within accepted tolerances at the injected current amplitudes. A major deviation may require further investigation, as it could indicate a problem with the relay or an incorrect relay style for the application.

The verification of phase current and voltage measurements by comparison to other quantities seems reasonable. How, though, can I verify residual or neutral currents, or 3V0 voltages, by comparison, when my system is closely balanced?

Since these inputs are verified at commissioning, maintenance verification requires ensuring that phase quantities are as expected and that 3IO and 3VO quantities appear equal to or close to 0.

These quantities also may be verified by use of oscillographic records for connected microprocessor relays as recorded during system ~~disturbances.~~Disturbances. Such records may compare to similar values recorded at other locations by other microprocessor relays for the same event, or compared to expected values (from short circuit studies) for known ~~fault~~Fault locations.

What does this Standard require for testing an auxiliary tripping relay?

Table 1 and Table 3 requires that a trip test must verify that the auxiliary tripping relay(s) and/or lockout relay(s) which are directly in a trip path from the protective relay to the interrupting device trip coil operate(s) electrically. Auxiliary outputs not in a trip path (i.e. annunciation or DME input) are not required, by this ~~Standard~~standard, to be checked.

Do I have to perform a full end-to-end test of a Special Protection System?

No. All portions of the SPS need to be maintained, and the portions must overlap, but the overall SPS does not need to have a single end-to-end test. In other words it may be tested in piecemeal fashion provided all of the pieces are verified.

What about SPS interfaces between different entities or owners?

As in all of the Protection System requirements, SPS segments can be tested individually, thus minimizing the need to accommodate complex maintenance schedules.

What do I have to do if I am using a phasor measurement unit (PMU) as part of a Protection System or Special Protection System?

Any Phasor Measurement Unit (PMU) function whose output is used in a Protection System or Special Protection System (as opposed to a monitoring task) must be verified as a ~~component~~Component in a Protection System.

How do I maintain a Special Protection System or relay sensing for non-distributed UFLS or UVLS Systems?

Since ~~components~~Components of the SPS, UFLS~~,~~ and UVLS are the same types of ~~components~~Components as those in Protection Systems, then these ~~components~~Components should be maintained like similar ~~components~~Components used for other Protection System functions. In many cases the devices for SPS, UFLS and UVLS are also used for other protective functions. The same maintenance activities apply with the exception that distributed ~~systems~~Systems (UFLS and UVLS) have fewer dc supply and control circuitry maintenance activity requirements.

For the testing of the output action, verification may be by breaker tripping, but may be verified in overlapping segments. For example, an SPS that trips a remote circuit breaker might be tested by testing the various parts of the scheme in overlapping segments. Another method is to document the ~~real~~Real-time tripping of an SPS scheme should that occur. Forced trip tests of circuit breakers (etc) that are a part of distributed UFLS or UVLS schemes are not required.

The established maximum allowable intervals do not align well with the scheduled outages for my power plant. Can I extend the maintenance to the next scheduled outage following the established maximum interval?

No. You must complete your maintenance within the established maximum allowable intervals in order to be compliant. You will need to schedule your maintenance during available outages to complete your maintenance as required, even if it means that you may do protective relay maintenance more frequently than the maximum allowable intervals. The maintenance intervals were selected with typical plant outages, among other things, in mind.

If I am unable to complete the maintenance, as required, due to a major natural disaster (hurricane, earthquake, etc~~)~~,), how will this affect my compliance with this ~~Standard.~~standard?

The Sanction Guidelines of the North American Electric Reliability Corporation, effective January 15, 2008, provides that the Compliance Monitor will consider extenuating circumstances when considering any sanctions.

What if my observed testing results show a high incidence of out-of-tolerance relays~~,~~; or, even worse, I am experiencing numerous relay ~~misoperations~~Misoperations due to the relays being out-of-tolerance?

The established maximum time intervals are mandatory only as a not-to-exceed limitation. The establishment of a maximum is measurable. But~~,~~ any entity can choose to test some or all of their Protection System ~~components~~Components more frequently (or~~,~~ to express it differently, exceed the minimum requirements of the ~~Standard~~standard). Particularly~~,~~ if you find that the maximum intervals in the ~~Standard~~standard do not achieve your expected level of performance, it is understandable that you would maintain the related equipment more frequently. A high incidence of relay Misoperations is in no one's best interest.

We believe that the ~~4~~four-month interval between inspections is unneccessary~~, why~~. Why can we not perform these inspections twice per year?

The ~~standard drafting team~~Standard Drafting Team, through the comment process, has discovered that routine monthly inspections are not the norm. To align routine station inspections with other important inspections, the ~~4~~four-month interval was chosen. In lieu of station visits, many activities can be accomplished with automated monitoring and alarming.

Our maintenance plan calls for us to perform routine protective relay tests every 3 years~~; if~~. If we are unable to achieve this schedule, but we are able to complete the procedures in less than the ~~Maximum Time Interval~~ maximum time interval ,then are we in or out of compliance?

According to R3, if you have a time-based maintenance program, then you will be in violation of the standard only if you exceed the maximum maintenance intervals prescribed in the Tables. According to R4, if your device in question is part of a Performance-Based Maintenance program, then you will be in violation of the standard if you fail to meet your PSMP, even if you do not exceed the maximum maintenance intervals prescribed in the Tables. The intervals in ~~tables~~the Tables are associated with TBM and CBM; Attachment A is associated with PBM.

Please provide a sample list of devices or ~~systems~~Systems that must be verified in a generator, generator step-up transformer, ~~and~~ generator connected station ~~auxiliary~~ service or generator connected excitation transformer to meet the requirements of this ~~Maintenance Standard~~maintenance standard.

Examples of typical devices and ~~systems~~Systems that may directly trip the generator, or trip through a lockout relay, may include, but are not necessarily limited to:

- Fault protective functions, including distance functions, voltage-restrained overcurrent functions, or voltage-controlled overcurrent functions
- Loss-of-field relays
- Volts-per-hertz relays
- Negative sequence overcurrent relays
- Over voltage and under voltage protection relays
- Stator-ground relays
- Communications-based Protection Systems such as transfer-trip ~~systems~~Systems
- Generator differential relays
- Reverse power relays
- Frequency relays
- Out-of-step relays
- Inadvertent energization protection
- Breaker failure protection

For generator step-up~~ or~~, generator-connected station ~~auxiliary~~service transformers, or generator connected excitation transformers, operation of any of the following associated protective relays frequently would result in a trip of the generating unit; and, as such, would be included in the program:

- Transformer differential relays

- Neutral overcurrent relay
- Phase overcurrent relays

Relays which trip breakers serving station auxiliary ~~loads~~Loads such as pumps, fans, or fuel handling equipment, etc., need not be included in the program, even if the loss of the those ~~loads~~Loads could result in a trip of the generating unit. Furthermore, relays which provide protection to secondary unit substation (SUS) or low switchgear transformers and relays protecting other downstream plant electrical distribution system components are not included in the scope of this program, even if a trip of these devices might eventually result in a trip of the generating unit. For example, a thermal overcurrent trip on the motor of a coal-conveyor belt could eventually lead to the tripping of the generator, but it does not cause the trip.

In the case where a plant does not have a generator connected station service transformer such that it is normally fed from a system connected station service transformer, is it still the drafting team's intent to exclude the ~~protection systems~~Protection Systems for these system connected auxiliary transformers from scope even when the loss of the normal (system connected) station service transformer will result in a trip of a BES generating ~~facility?~~ Facility?

The SDT does not intend that the system-connected station ~~auxiliary~~service transformers be included in the Applicability. The generator-connected station service transformers and generator connected excitation transformers are often connected to the generator bus directly without an interposing breaker; thus, the Protection Systems on these transformers will trip the generator as discussed in 4.2.5.1.

What is meant by "verify operation of the relay inputs and outputs that are essential to proper functioning of the Protection System?"

Any input or output (of the relay) that "affects the tripping" of the breaker is included in the scope of I/O of the relay to be verified. By "affects the tripping~~"~~," one needs to realize that sometimes there are more ~~Inputs~~inputs and ~~Outputs~~outputs than simply the output to the trip coil. Many important protective functions include things like breaker fail initiation, zone timer initiation and sometimes even 52a/b contact inputs are needed for a protective relay to correctly operate.

Each input should be "picked up" or "turned on and off" and verified as changing state by the microprocessor of the relay. Each output should be "operated" or "closed and opened" from the microprocessor of the relay and the output should be verified to change state on the output terminals of the relay. One possible method of testing inputs of these relays is to "jumper" the needed dc voltage to the input and verify that the relay registered the change of state.

Electromechanical lock-out relays (86) (used to convey the tripping current to the trip coils) need to be electrically operated to prove the capability of the device to change state. These tests need to be accomplished at least every ~~6~~six years, unless PBM methodology is applied.

The contacts on the 86 or auxiliary tripping relays (94) that change state to pass on the trip current to a breaker trip coil need only be checked every ~~twelve~~12 years with the control circuitry.

What is the difference between a distributed UFLS/UVLS and a non-distributed UFLS/UVLS scheme?

A distributed UFLS or UVLS scheme contains individual relays which make independent ~~load~~Load shed decisions based on applied settings and localized voltage and/or current inputs. A distributed scheme may involve an enable/disable contact in the scheme and still be considered a distributed scheme. A non-distributed UFLS or UVLS scheme involves a system where there is some type of centralized measurement and ~~load~~Load shed decision being made. A non-distributed UFLS/UVLS scheme is considered similar to an SPS scheme and falls under Table 1 for maintenance activities and intervals.

8.2 Retention of Records

PRC-005-1 describes a reporting or auditing cycle of one year and retention of records for three years. However, with a three-year retention cycle, the records of verification for a Protection System might be discarded before the next verification, leaving no record of what was done if a Misoperation or failure is to be analyzed.

PRC-005-2 corrects this by requiring:

The Transmission Owner, Generator Owner, and Distribution Provider shall each retain documentation of the two most recent performances of each distinct maintenance activity for the Protection System ~~components~~Components, or to the previous scheduled (on-site) audit date, whichever is longer.

This requirement assures that the documentation shows that the interval between maintenance cycles correctly meets the maintenance interval limits. The requirement is actually alerting the industry to documentation requirements already implemented by audit teams. Evidence of compliance bookending the interval shows interval accomplished instead of proving only your planned interval.

The SDT is aware that, in some cases, the retention period could be relatively long. But, the retention of documents simply helps to demonstrate compliance.

8.2.1 Frequently Asked Questions:

Please use a specific example to demonstrate the data retention requirements.

The data retention requirements are intended to allow the availability of maintenance records to demonstrate that the time intervals in your maintenance plan were upheld. For example: "Company A" has a maintenance plan that requires its electromechanical protective relays be tested every ~~3~~three calendar years, with a maximum allowed grace period of an additional 18 months. This entity would be required to maintain its records of maintenance of its last two routine scheduled tests. Thus, its test records would have a latest routine test, as well as its previous routine test. The interval between tests is, therefore, provable to an auditor as being within "Company A's" stated maximum time interval of 4.5 years.

The intent is not to require three test results proving two time intervals, but rather have two test results proving the last interval. The drafting team contends that this minimizes storage requirements, while still having minimum data available to demonstrate compliance with time intervals.

If an entity prefers to utilize Performance-Based Maintenance, then statistical data may well be retained for extended periods to assist with future adjustments in time intervals.

If an equipment item is replaced, then the entity can restart the maintenance-time-interval-clock if desired~~,~~; however, the replacement of equipment does not remove any documentation

requirements that would have been required to verify compliance with time-interval requirements~~; in~~. In other words, do not discard maintenance data that goes to verify your work.

The retention of documentation for new and/or replaced equipment is all about proving that the maintenance intervals had been in compliance. For example, a long-range plan of upgrades might lead an entity to ignore required maintenance; retaining the evidence of prior maintenance that existed before any retirements and upgrades proves compliance with the ~~Standard~~standard.

What does this Maintenance Standard say about commissioning? Is it necessary to have documentation in your maintenance history of the completion of commission testing?

This ~~Standard~~standard does not establish requirements for commission testing. Commission testing includes all testing activities necessary to conclude that a ~~facility~~Facility has been built in accordance with design. While a thorough commission testing program would include, either directly or indirectly, the verification of all those Protection System attributes addressed by the maintenance activities specified in the Tables of PRC-005-2, verification of the adequacy of initial installation necessitates the performance of testing and inspections that go well beyond these routine maintenance activities. For example, commission testing might set baselines for future tests; perform acceptance tests and/or warranty tests; utilize testing methods that are not generally done routinely like staged-~~fault~~Fault-tests.

However, many of the Protection System attributes which are verified during commission testing are not subject to age related or service related degradation, and need not be re-verified within an ongoing maintenance program. Example – it is not necessary to re-verify correct terminal strip wiring on an ongoing basis.

PRC-005-2 assumes that thorough commission testing was performed prior to a Protection System being placed in service. PRC-005-2 requires performance of maintenance activities that are deemed necessary to detect and correct plausible age and service related degradation of ~~components~~Components, such that a properly built and commission tested Protection System will continue to function as designed over its service life.

It should be noted that commission testing frequently is performed by a different organization than that which is responsible for the ongoing maintenance of the Protection System. Furthermore, the commission testing activities will not necessarily correlate directly with the maintenance activities required by the ~~Standard~~standard. As such, it is very likely that commission testing records will deviate significantly from maintenance records in both form and content; and, therefore, it is not necessary to maintain commission testing records within the maintenance program documentation.

Notwithstanding the differences in records, an entity would be wise to retain commissioning records to show a maintenance start date. (See below). An entity that requires that their commissioning tests have, at a minimum, the requirements of PRC-005-2 would help that entity prove time interval maximums by setting the initial time clock.

How do you determine the initial due date for maintenance?

The initial due date for maintenance should be based upon when a Protection System was tested. Alternatively, an entity may choose to use the date of completion of the commission

testing of the Protection System ~~component~~Component and the system was placed into service as the starting point in determining its first maintenance due dates. Whichever method is chosen, for newly installed Protection Systems the ~~components~~Components should not be placed into service until minimum maintenance activities have taken place.

It is conceivable that there can be a (substantial) difference in time between the date of testing, as compared to the date placed into service. The use of the "Calendar Year" language can help determine the next due date without too much concern about being non-compliant for missing test dates by a small amount (provided your dates are not already at the end of a year). However, if there is a substantial amount of time difference between testing and in-service dates, then the testing date should be followed because it is the degradation of ~~components~~Components that is the concern. While accuracy fluctuations may decrease when ~~components~~Components are not energized, there are cases when degradation can take place, even though the device is not energized. Minimizing the time between commissioning tests and in-service dates will help.

If I miss two battery inspections four times out of 100 Protection System ~~components~~Components on my transmission system, does that count as 2 percent or 8 percent when counting Violation Severity Level (VSL) for R3?

The entity failed to complete its scheduled program on two of its ~~one hundred~~100 Protection System ~~components~~Components, which would equate to two percent for application to the VSL Table for Requirement R3. This VSL is written to compare missed ~~components~~Components to total ~~components~~Components. In this case ~~2 components~~two Components out of 100 were missed, or ~~2 %.~~two percent.

How do I achieve a "grace period" without being out of compliance?

~~According to R3, a strictly time-based maintenance program would only be in violation if the maximum time interval of the Tables is exceeded.~~ The objective here is to create a time extension within your own PSMP that still does not violate the maximum time intervals stated in the standard. Remember that the maximum time intervals listed in the Tables cannot be extended.

For the purposes of this example, concentrating on just unmonitored protective relays~~, –~~ – Table 1-1 specifies a maximum time interval (between the mandated maintenance activities) of ~~6~~six calendar years. Your plan must ensure that your unmonitored relays are tested at least once every ~~6~~six calendar years. You could, within your PSMP, require that your unmonitored relays be tested every ~~4~~four calendar years, with a maximum allowable time extension of 18 calendar months. This allows an entity to have deadlines set for the auto-generation of work orders, but still ~~have~~has the flexibility in scheduling complex work schedules. This also allows for that 18 calendar months to act as a buffer, in effect a grace period within your PSMP, in the event of unforeseen events. You will note that this example of a maintenance plan interval has a planned time of ~~4~~four years; it also has a built-in time extension allowed within the PSMP, and yet does not exceed the maximum time interval allowed by the ~~Standard~~standard. So while there are no time extensions allowed beyond the ~~Standard~~standard, an entity can still have substantial flexibility to maintain their Protection System ~~components~~Components.

8.3 Basis for Table 1 Intervals

When developing the original *Protection System Maintenance – A Technical Reference* in 2007, the SPCTF collected all available data from Regional Entities (REs) on time intervals

recommended for maintenance and test programs. The recommendations vary widely in categorization of relays, defined maintenance actions, and time intervals, precluding development of intervals by averaging. The SPCTF also reviewed the 2005 Report [2] of the IEEE Power System Relaying Committee Working Group I-17 (Transmission Relay System Performance Comparison). Review of the I-17 report shows data from a small number of utilities, with no company identification or means of investigating the significance of particular results.

To develop a solid current base of practice, the SPCTF surveyed its members regarding their maintenance intervals for electromechanical and microprocessor relays, and asked the members to also provide definitively-known data for other entities. ~~The~~T he survey represented 470 GW of peak ~~load~~Load, or ~~64%~~four percent of the NERC peak ~~load.~~Load. Maintenance interval averages were compiled by weighting reported intervals according to the size (based on peak ~~load~~Load) of the reporting utility. Thus, the averages more accurately represent practices for the large populations of Protection Systems used across the NERC regions.

The results of this survey with weighted averaging indicate maintenance intervals of ~~5~~five years for electromechanical or solid state relays, and ~~7~~seven years for unmonitored microprocessor relays.

A number of utilities have extended maintenance intervals for microprocessor relays beyond ~~7~~seven years, based on favorable experience with the particular products they have installed. To provide a technical basis for such extension, the SPCTF authors developed a recommendation of 10 years using the Markov modeling approach from [1~~]~~], as summarized in Section 8.4. The results of this modeling depend on the completeness of self-testing or monitoring. Accordingly, this extended interval is allowed by Table 1, only when such relays are monitored as specified in the attributes of monitoring contained in Tables 1-1 through 1-5 and Table 2. Monitoring is capable of reporting Protection System health issues that are likely to affect performance within the 10 year time interval between verifications.

It is important to note that, according to modeling results, Protection System availability barely changes as the maintenance interval is varied below the 10-year mark. Thus, reducing the maintenance interval does not improve Protection System availability. With the assumptions of the model regarding how maintenance is carried out, reducing the maintenance interval actually degrades Protection System availability.

8.4 Basis for Extended Maintenance Intervals for Microprocessor Relays

Table 1 allows maximum verification intervals that are extended based on monitoring level. The industry has experience with self-monitoring microprocessor relays that leads to the Table 1 value for a monitored relay, as explained in Section 8.3. To develop a basis for the maximum interval for monitored relays in their *Protection System Maintenance – A Technical Reference*, the SPCTF used the methodology of Reference [1], which specifically addresses optimum routine maintenance intervals. The Markov modeling approach of [1] is judged to be valid for the design and typical failure modes of microprocessor relays.

The SPCTF authors ran test cases of the Markov model to calculate two key probability measures:

- Relay Unavailability - the probability that the relay is out of service due to failure or maintenance activity while the power system ~~element~~Element to be protected is in

service.

- Abnormal Unavailability - the probability that the relay is out of service due to failure or maintenance activity when a ~~fault~~Fault occurs, leading to failure to operate for the ~~fault~~Fault.

The parameter in the Markov model that defines self-monitoring capability is ST (for self test). ST = 0 if there is no self-monitoring; ST = 1 for full monitoring. Practical ST values are estimated to range from .75 to .95. The SPCTF simulation runs used constants in the Markov model that were the same as those used in [1] with the following exceptions:

Sn, Normal tripping operations per hour = 21600 (reciprocal of normal ~~fault~~Fault clearing time of 10 cycles)

Sb, Backup tripping operations per hour = 4320 (reciprocal of backup ~~fault~~Fault clearing time of 50 cycles)

Rc, Protected ~~component~~Component repairs per hour = 0.125 (8 hours to restore the power system)

Rt, Relay routine tests per hour = 0.125 (8 hours to test a Protection System)

Rr, Relay repairs per hour = 0.08333 (12 hours to complete a Protection System repair after failure)

Experimental runs of the model showed low sensitivity of optimum maintenance interval to these parameter adjustments.

The resulting curves for ~~Relay Unavailability and Abnormal Unavailability~~relay unavailability and abnormal unavailability versus maintenance interval showed a broad minimum (optimum maintenance interval) in the vicinity of 10 years – the curve is flat, with no significant change in either unavailability value over the range of 9, 10, or 11 years. This was true even for a relay ~~Mean Time~~mean time between Failures (MTBF) of 50 years, much lower than MTBF values typically published for these relays. Also, the Markov modeling indicates that both the relay unavailability and abnormal unavailability actually become higher with more frequent testing. This shows that the time spent on these more frequent tests yields no failure discoveries that approach the negative impact of removing the relays from service and running the tests.

The PSMT SDT discussed the practical need for "time-interval extensions" or "grace periods" to allow for scheduling problems that resulted from any number of business contingencies. The time interval discussions also focused on the need to reflect industry norms surrounding Generator outage frequencies. Finally, it was again noted that FERC Order 693 demanded maximum time intervals. "Maximum time intervals" by their very term negates any "time-interval extension" or "grace periods~~".~~." To recognize the need to follow industry norms on Generator outage frequencies and accommodate a form of time-interval extension, while still following FERC Order 693, the Standard Drafting Team arrived at a ~~6~~ six-year interval for the electromechanical relay, instead of the ~~5~~ five-year interval arrived at by the SPCTF. The PSMT SDT has followed the FERC directive for a *maximum* time interval and has determined that no extensions will be allowed. Six years has been set for the maximum time interval between manual maintenance activities. This maximum time interval also works well for maintenance cycles that have been in use in generator plants for decades.

For monitored relays, the PSMT SDT notes that the SPCTF called for 10 years as the interval between maintenance activities. This 10-year interval was chosen, even though there was "…no significant change in unavailability value over the range of 9, 10, or 11 years. This was true even for a relay Mean Time between Failures (MTBF) of 50 years…" The Standard Drafting Team again sought to align maintenance activities with known successful practices and outage schedules. The Standard does not allow extensions on any ~~component~~Component of the Protection System; thus, the maximum allowed interval for these ~~components~~Components has been set to 12 years. Twelve years also fits well into the traditional maintenance cycles of both substations and generator plants.

Also of note is the Table's use of the term "Calendar" in the column for "Maximum Maintenance Interval~~".~~." The PSMT SDT deemed it necessary to include the term "Calendar" to facilitate annual maintenance planning, scheduling and implementation. This need is the result of known occurrences of system requirements that could cause maintenance schedules to be missed by a few days or weeks. The PSMT SDT chose the term "Calendar" to preclude the need to have schedules be met to the day. An electromechanical protective relay that is maintained in year ~~#1~~number one need not be revisited until ~~6~~six years later (year ~~#7).~~number seven). For example~~:~~, a relay was maintained April 10, 2008; maintenance would need to be completed no later than December 31, 2014.

Though not a requirement of this ~~Standard~~standard, to stay in line with many Compliance Enforcement Agencies audit processes an entity should define, within their own PSMP, the entity's use of terms like annual, calendar year, etc. Then, once this is within the PSMP, the entity should abide by their chosen language.

9. Performance-Based Maintenance Process

In lieu of using the Table 1 intervals, a Performance-Based Maintenance process may be used to establish maintenance intervals (*PRC-005 Attachment A Criteria for a Performance-Based Protection System Maintenance Program*). A Performance-Based Maintenance process may justify longer maintenance intervals, or require shorter intervals relative to Table 1. In order to use a Performance-Based Maintenance process, the documented maintenance program must include records of repairs, adjustments, and corrections to covered Protection Systems in order to provide historical justification for intervals, other than those established in Table 1. Furthermore, the asset owner must regularly analyze these records of corrective actions to develop a ranking of causes. Recurrent problems are to be highlighted, and remedial action plans are to be documented to mitigate or eliminate recurrent problems.

Entities with Performance-Based Maintenance track performance of Protection Systems, demonstrate how they analyze findings of performance failures and aberrations, and implement continuous improvement actions. Since no maintenance program can ever guarantee that no malfunction can possibly occur, documentation of a Performance-Based Maintenance program would serve the utility well in explaining to regulators and the public a Misoperation leading to a major ~~system~~System outage event.

A Performance-Based Maintenance program requires auditing processes like those included in widely used industrial quality ~~systems~~Systems (such as ***ISO 9001-2000, Quality management ~~systems~~Systems — Requirements;*** or applicable parts of the NIST Baldridge National Quality Program). The audits periodically evaluate:

- The completeness of the documented maintenance process
- Organizational knowledge of and adherence to the process
- Performance metrics and documentation of results
- Remediation of issues
- Demonstration of continuous improvement.

In order to opt into a Performance-Based Maintenance (PBM) program, the asset owner must first sort the various Protection System ~~components~~Components into population segments. Any population segment must be comprised of at least 60 individual units; if any asset owner opts for PBM, but does not own 60 units to comprise a population, then that asset owner may combine data from other asset owners until the needed 60 units is aggregated. Each population segment must be composed of a grouping of Protection Systems or ~~components~~Components of a consistent design standard or particular model or type from a single manufacturer and subjected to similar environmental factors. For example: One segment cannot be comprised of both GE & Westinghouse electro-mechanical lock-out relays; likewise, one segment cannot be comprised of 60 GE lock-out relays, 30 of which are in a dirty environment, and the remaining 30 from a clean environment. This PBM process cannot be applied to batteries, but can be applied to all other ~~components~~Components of a Protection System, including (but not limited to) specific battery chargers, instrument transformers, trip coils and/or control circuitry (etc.).

9.1 Minimum Sample Size

Large Sample Size

An assumption that needs to be made when choosing a sample size is "the sampling distribution of the sample mean can be approximated by a normal probability distribution." The Central Limit Theorem states: "In selecting simple random samples of size *n* from a population, the sampling distribution of the sample mean *x* can be approximated by a normal probability distribution as the sample size becomes large." (Essentials of Statistics for Business and Economics, Anderson, Sweeney, Williams, 2003~~)~~.)

To use the Central Limit Theorem in statistics, the population size should be large. The references below are supplied to help define what is large.

> "… whenever we are using a large simple random sample (rule of thumb: n>=30), the central limit theorem enables us to conclude that the sampling distribution of the sample mean can be approximated by a normal distribution." (Essentials of Statistics for Business and Economics, Anderson, Sweeney, Williams, 2003~~)~~.)
>
> "If samples of size n, when n>=30, are drawn from any population with a mean *u* and a standard deviation σ, the sampling distribution of sample means approximates a normal distribution. The greater the sample size, the better the approximation." (Elementary Statistics - Picturing the World, Larson, Farber, 2003~~)~~.)
>
> "The sample size is large (generally n>=30)… (Introduction to Statistics and Data Analysis - Second Edition, Peck, Olson, Devore, 2005~~)~~.)
>
> "… the normal is often used as an approximation to the *t* distribution in a test of a null hypothesis about the mean of a normally distributed population when the population variance is estimated from a relatively large sample. A sample size exceeding 30 is often given as a minimal size in this connection." (Statistical Analysis for Business Decisions, Peters, Summers, 1968~~)~~.)

Error of Distribution Formula

Beyond the large sample size discussion above, a sample size requirement can be estimated using the bound on the Error of Distribution Formula when the expected result is of a "Pass/Fail" format and will be between 0 and 1.0.

The Error of Distribution Formula is:

$$B = z\sqrt{\frac{\pi(1-\pi)}{n}}$$

Where:

B = bound on the error of distribution (allowable error)

z = standard error

π = expected failure rate

n = sample size required

Solving for n provides:

$$n = \pi(1-\pi)\left(\frac{z}{B}\right)^2$$

Minimum Population Size to use Performance-Based Program

One entity's population of ~~components~~Components should be large enough to represent a sizeable sample of a vendor's overall population of manufactured devices. For this reason, the following assumptions are made:

B = ~~5%~~five percent

z = 1.96 (This equates to a ~~95%~~ninety-five percent confidence level)

π = ~~4%~~four percent

Using the equation above, n=59.0.

Minimum Sample Size to evaluate Performance-Based Program

The number of ~~components~~Components that should be included in a sample size for evaluation of the appropriate testing interval can be smaller because a lower confidence level is acceptable since the sample testing is repeated or updated annually. For this reason, the following assumptions are made:

B = ~~5%~~five percent

z = 1.44 (~~85%~~eighty-five percent confidence level)

π = ~~4%~~four percent

Using the equation above, n=31.8.

Recommendation

Based on the above discussion, a sample size should be at least 30 to allow use of the equation mentioned. Using this and the results of the equation, the following numbers are recommended (and required within the ~~Standard~~standard):

Minimum Population Size to use Performance-Based Maintenance Program = 60

Minimum Sample Size to evaluate Performance-Based Program = 30.

Once the population segment is defined, then maintenance must begin within the intervals as outlined for the device described in the Tables 1-1 through 1-5. Time intervals can be lengthened provided the last year's worth of ~~components~~Components tested (or the last 30 units maintained, whichever is more) had fewer than ~~4% countable events.~~four percent Countable Events. It is notable that ~~4%~~four percent is specifically chosen because an entity with a small population (~~60~~30 units) would have to adjust its time intervals between maintenance if more than ~~1 countable event~~one Countable Event was found to have occurred during the last analysis period. A smaller percentage would require that entity to adjust the time interval between maintenance activities if even one unit is found out of tolerance or causes a Misoperation.

The minimum number of units that can be tested in any given year is ~~5%~~five percent of the population. Note that this ~~5%~~five percent threshold sets a practical limitation on total length of time between intervals at 20 years.

If at any time the number of ~~countable events~~Countable Events equals or exceeds ~~4%~~four percent of the last year's tested ~~components~~Components (or the last 30 units maintained, whichever is more~~)~~), then the time period between manual maintenance activities must be decreased. There is a time limit on reaching the decreased time at which the ~~countable events~~Countable Events is less than ~~4%;~~four percent; this must be attained within three years.

9.2 Frequently Asked Questions:

I'm a small entity and cannot aggregate a population of Protection System ~~components~~Components to establish a segment required for a Performance-Based Protection System Maintenance Program. How can I utilize that opportunity?

Multiple asset owning entities may aggregate their individually owned populations of individual Protection System ~~components~~Components to create a segment that crosses ownership boundaries. All entities participating in a joint program should have a single documented joint management process, with consistent Protection System Maintenance Programs (practices, maintenance intervals and criteria), for which the multiple owners are individually responsible with respect to the requirements of the Standard. The requirements established for Performance-Based Maintenance must be met for the overall aggregated program on an ongoing basis.

The aggregated population should reflect all factors that affect consistent performance across the population, including any relevant environmental factors such as geography, power-plant vs. substation, and weather conditions.

Can an owner go straight to a Performance-Based Maintenance program schedule, if they have previously gathered records?

Yes. An owner can go to a Performance-Based Maintenance program immediately. The owner will need to comply with the requirements of a Performance-Based Maintenance program as listed in the Standard. Gaps in the data collected will not be allowed; therefore, if an owner finds that a gap exists such that they cannot prove that they have collected the data as required for a Performance-Based Maintenance program then they will need to wait until they can prove compliance.

When establishing a Performance-Based Maintenance program, can I use test data from the device manufacturer, or industry survey results, as results to help establish a basis for my Performance-Based intervals?

No~~. You~~, you must use actual in-service test data for the ~~components~~Components in the segment~~.~~.

What types of ~~misoperations~~Misoperations or events are not considered ~~countable events~~Countable Events in the Performance-Based Protection System Maintenance (PBM) Program?

Countable ~~events~~Events are intended to address conditions that are attributed to hardware failure or calibration failure; that is, conditions that reflect deteriorating performance of the ~~component~~Component. These conditions include any condition where the device previously worked properly, then, due to changes within the device, malfunctioned or degraded to the point that re-calibration (to within the entity's tolerance) was required.

For this purpose of tracking hardware issues, human errors resulting in Protection System ~~misoperations~~Misoperations during system installation or maintenance activities are not considered ~~countable events~~Countable Events. Examples of excluded human errors include relay setting errors, design errors, wiring errors, inadvertent tripping of devices during testing or installation, and misapplication of Protection System ~~components~~Components. Examples of misapplication of Protection System ~~components~~Components include wrong CT or PT tap position, protective relay function misapplication, and ~~components~~Components not specified correctly for their installation. Obviously, if one is setting up relevant data about hardware failures then human failures should be eliminated from the hardware performance analysis.

One example of human-error is not pertinent data might be in the area of testing "86" lock-out relays (LOR). "Entity A" has two types of LOR's type "X" and type "Y"; they want to move into a performance based maintenance interval. They have 1000 of each type, so the population variables are met. During electrical trip testing of all of their various schemes over the initial six-year interval they find zero type "X" failures, but human error led to tripping a BES ~~element~~Element 100 times; they find 100 type "Y" failures and had an additional 100 human-error caused tripping incidents. In this example the human-error caused ~~misoperations~~Misoperations should not be used to judge the performance of either type of LOR. Analysis of the data might lead "Entity A" to change time intervals. Type "X" LOR can be placed into extended time interval testing because of its low failure rate (zero failures) while Type "Y" would have to be tested more often than every 6 calendar years (100 failures divided by 1000 units exceeds the ~~4%~~four percent tolerance level).

Certain types of Protection System ~~component~~Component errors that cause ~~misoperations~~Misoperations are not considered ~~countable events~~Countable Events. Examples of excluded ~~component~~Component errors include device malfunctions that are correctable by firmware upgrades and design errors that do not impact protection function.

What are some examples of methods of correcting segment perfomance for Performance-Based Maintenance?

There are a number of methods that may be useful for correcting segment performance for mal-performing segments in a Performance-Based Maintenance system. Some examples are listed below.

- The maximum allowable interval, as established by the Performance-Based Maintenance system, can be decreased. This may, however, be slow to correct the performance of the segment.
- Identifiable sub-groups of ~~components~~Components within the established segment, which have been identified to be the mal-performing portion of the segment, can be broken out as an independent segment for target action. Each resulting segment must satisfy the minimum population requirements for a Performance-Based Maintenance program in order to remain within the program.
- Targeted corrective actions can be taken to correct frequently occurring problems. An example would be replacement of capacitors within electromechanical distance relays if bad capacitors were determined to be the cause of the mal-performance.

- Components within the mal-performing segment can be replaced with other ~~components~~Components (electromechanical distance relays with microprocessor relays, for example) to remove the mal-performing segment.

If I find (and correct) a ~~maintenance-correctable issue~~Unresolved Maintenance Issue as a result of a ~~misoperation~~Misoperation investigation (Re: PRC-004), how does this affect my Performance-Based Maintenance program?

If you perform maintenance on a Protection System ~~component~~Component for any reason (including as part of a PRC-004 required ~~misoperation~~Misoperation investigation/corrective action), the actions performed can count as a maintenance activity provided the activities in the relevant Tables have been done, and, if you desire, "reset the clock" on everything you've done. In a Performance-Based Maintenance program, you also need to record the ~~maintenance-correctable issue~~Unresolved Maintenance Issue as a ~~countable event~~Countable Event within the relevant ~~component~~Component group segment and use it in the analysis to determine your correct Performance-Based Maintenance interval for that ~~component~~Component group. Note that "resetting the clock" should not be construed as interfering with an entity's routine testing schedule because the "clock-reset" would actually make for a decreased time interval by the time the next routine test schedule comes around.

For example a relay scheme, consisting of ~~4~~four relays, is tested on 1-1-11 and the PSMP has a time interval of 3 calendar years with an allowable extension of 1 calendar year. The relay would be due again for routine testing before the end of the year 2015. This mythical relay scheme has a ~~misoperation~~Misoperation on 6-1-12 that points to one of the four relays as bad. Investigation proves a bad relay and a new one is tested and installed in place of the original. This replacement relay actually could be retested before the end of the year 2016 (clock-reset) and not be out of compliance. This requires tracking maintenance by individual relays and is allowed. However, many companies schedule maintenance in other ways like by substation or by circuit breaker or by relay scheme. By these methods of tracking maintenance that "replaced relay" will be retested before the end of the year 2015. This is also acceptable. In no case was a particular relay tested beyond the PSMP of ~~4~~four years max, nor was the 6 year max of the Standard exceeded. The entity can reset the clock if they desire or the entity can continue with original schedules and, in effect, test even more frequently.

Why are batteries excluded from PBM? What about exclusion of batteries from condition based maintenance?

Batteries are the only ~~element~~Element of a Protection System that is a perishable item with a shelf life. As a perishable item batteries require not only a constant float charge to maintain their freshness (charge), but periodic inspection to determine if there are problems associated with their aging process and testing to see if they are maintaining a charge or can still deliver their rated output as required.

Besides being perishable, a second unique feature of a battery that is unlike any other Protection System ~~element~~Element is that a battery uses chemicals, metal alloys, plastics, welds, and bonds that must interact with each other to produce the constant dc source required for Protection Systems, undisturbed by ac system ~~disturbances~~Disturbances.

No type of battery manufactured today for Protection System application is free from problems that can only be detected over time by inspection and test. These problems can arise from variances in the manufacturing process, chemicals and alloys used in the construction of the

individual cells, quality of welds and bonds to connect the ~~components~~Components, the plastics used to make batteries and the cell forming process for the individual battery cells.

Other problems that require periodic inspection and testing can result from transportation from the factory to the job site, length of time before a charge is put on the battery, the method of installation, the voltage level and duration of equalize charges, the float voltage level used, and the environment that the battery is installed in.

All of the above mentioned factors and several more not discussed here are beyond the control of the Functional Entities that want to use a Performance-Based Protection System Maintenance (PBM) program. These inherent variances in the aging process of a battery cell make establishment of a designated segment based on manufacturer and type of battery impossible.

The whole point of PBM is that if all variables are isolated then common aging and performance criteria would be the same. However, there are too many variables in the electrochemical process to completely isolate all of the performance-changing criteria.

Similarly, Functional Entities that want to establish a condition-based maintenance program using the highest levels of monitoring, resulting in the least amount of hands-on maintenance activity, cannot completely eliminate some periodic maintenance of the battery used in a station dc supply. Inspection of the battery is required on a Maximum Maintenance Interval listed in the tables due to the aging processes of station batteries. However, higher degrees of monitoring of a battery can eliminate the requirement for some periodic testing and some inspections (see Table 1-4).

Please provide an example of the calculations involved in extending maintenance time intervals using PBM.

Entity has 1000 GE-HEA lock-out relays; this is greater than the minimum sample requirement of 60. They start out testing all of the relays within the prescribed Table requirements (6 year max) by testing the relays every 5 years. The entity's plan is to test 200 units per year; this is greater than the minimum sample size requirement of 30. For the sake of example only the following will show 6 failures per year, reality may well have different numbers of failures every year. PBM requires annual assessment of failures found per units tested. After the first year of tests the entity finds 6 failures in the 200 units tested. 6/200= 3% failure rate. This entity is now allowed to extend the maintenance interval if they choose. The entity chooses to extend the maintenance interval of this population segment out to 10 years. This represents a rate of 100 units tested per year; entity selects 100 units to be tested in the following year. After that year of testing these 100 units the entity again finds 6 failed units. 6/100= 6% failures. This entity has now exceeded the acceptable failure rate for these devices and must accelerate testing of all of the units at a higher rate such that the failure rate is found to be less than ~~4%~~four percent per year; the entity has three years to get this failure rate down to ~~4%~~four percent or less (per year). In response to the 6% failure rate, the entity decreases the testing interval to 8 years. This means that they will now test 125 units per year (1000/8). The entity has just two years left to get the test rate corrected.

After a year, they again find ~~6~~six failures out of the 125 units tested. 6/125= ~~5%~~five percent failures. In response to the ~~5%~~five percent failure rate, the entity decreases the testing interval to ~~7~~seven years. This means that they will now test 143 units per year (1000/7). The entity has

just one year left to get the test rate corrected. After a year, they again find ~~6~~six failures out of the 143 units tested. 6/143= 4.2% failures.

(Note that the entity has tried ~~5~~five years and they were under the ~~4%~~four percent limit and they tried ~~7~~seven years and they were over the ~~4%~~four percent limit. They must be back at ~~4%~~four percent failures or less in the next year so they might simply elect to go back to ~~5~~five years.)

Instead, in response to the ~~5%~~five percent failure rate, the entity decreases the testing interval to ~~6~~six years. This means that they will now test 167 units per year (1000/6). After a year, they again find ~~6~~six failures out of the 167 units tested. 6/167= 3.6% failures. Entity found that they could maintain the failure rate at no more than ~~4%~~four percent failures by maintaining the testing interval at ~~6~~six years or less. Entity chose ~~6~~ six-year interval and effectively extended their TBM (~~5~~five years) program by 20~~%.~~ percent.

A note of practicality is that an entity will probably be in better shape to lengthen the intervals between tests if the failure rate is less than ~~2%.~~two percent. But the requirements allow for annual adjustments, if the entity desires. As a matter of maintenance management, an ever-changing test rate (units tested~~/~~/year) may be un-workable.

Note that the "~~5%~~five percent of ~~components~~Components" requirement effectively sets a practical limit of 20 year maximum PBM interval. Also of note is the "3 years" requirement; an entity might arbitrarily extend time intervals from ~~6~~six years to 20 years. In the event that an entity finds a failure rate greater than ~~4%~~four percent, then the test rate must be accelerated such that within three years the failure rate must be brought back down to ~~4%~~four percent or less.

Here is a table that demonstrates the values discussed:

Year #	Total Population (P)	Test Interval (I)	Units to be Tested (U= P/I)	# of Failures Found (F)	Failure Rate (=F/U)	Decision to Change Interval Yes or No	Interval Chosen
1	1000	5 yrs	200	6	3%	Yes	10 yrs
2	1000	10 yrs	100	6	6%	Yes	8 yrs
3	1000	8 yrs	125	6	5%	Yes	7 yrs
4	1000	7 yrs	143	6	4.2%	Yes	6 yrs
5	1000	6 yrs	167	6	3.6%	No	6 yrs

Please provide an example of the calculations involved in extending maintenance time intervals using PBM for control circuitry.

Note that the following example captures "Control Circuitry" as all of the trip paths associated with a particular trip coil of a circuit breaker. An entity is not restricted to this method of counting control circuits. Perhaps another method an entity would prefer would be to simply track every individual (parallel) trip path. Or perhaps another method would be to track all of the trip outputs from a specific (set) of relays protecting a specific ~~element.~~Element. Under the included definition of "Component":

The designation of what constitutes a control circuit ~~component~~Component is very dependent upon how an entity performs and tracks the testing of the control circuitry. Some entities test their control circuits on a breaker basis whereas others test their circuitry on a local zone of protection basis. Thus, entities are allowed the latitude to designate their own definitions of control circuit ~~components~~Components. Another example of where the entity has some discretion on determining what constitutes a single ~~component~~Component is the voltage and current sensing devices, where the entity may choose either to designate a full three-phase set of such devices or a single device as a single ~~component~~Component.

And in Attachment A (PBM) the definition of Segment:

Segment – *Protection Systems or ~~components~~Components of a consistent design standard, or a particular model or type from a single manufacturer that typically share other common ~~elements~~Elements. Consistent performance is expected across the entire population of a segment. A segment must contain at least sixty (60) individual ~~components~~Components.*

Example:

Entity has ~~1000~~1,000 circuit breakers, all of which have two trip coils, for a total of ~~2000~~2,000 trip coils; if all circuitry was designed and built with a consistent (internal entity) standard, then this is greater than the minimum sample requirement of 60.

For the sake of further example, the following facts are given:

Half of all relay panels (500) were built 40 years ago by an outside contractor, consisted of asbestos wrapped 600V-insulation panel wiring, and the cables exiting the control house are THHN pulled in conduit direct to exactly half of all of the various circuit breakers. All of the relay panels and cable pulls were built with consistent standards and consistent performance standard expectations within the segment (which is greater than 60). Each relay panel has redundant microprocessor (MPC) relays (retrofitted); each MPC relay supplies an individual trip output to each of the two trip coils of the assigned circuit breaker.

Approximately 35 years ago, the entity developed their own internal construction crew and now builds all of their own relay panels from parts supplied from vendors that meet the entity's specifications, including SIS 600V insulation wiring and copper-sheathed cabling within the direct conduits to circuit breakers. The construction crew uses consistent standards in the construction. This newer segment of their ~~Control Circuitry~~control circuitry population is different than the original segment, consistent (standards, construction and performance expectations) within the new segment and constitutes the remainder of the entity's population~~,~~ (another 500 panels and the cabling to the remaining 500 circuit breakers). Each relay panel has redundant microprocessor (MPC) relays; each MPC relay supplies an individual trip output to each of the two trip coils of the assigned circuit breaker. Every trip path in this newer

segment has a device that monitors the voltage directly across the trip contacts of the MPC relays and alarms via RTU and SCADA to the ~~Operations Control~~operations control room. This monitoring device, when not in alarm, demonstrates continuity all the way through the trip coil, cabling and wiring back to the trip contacts of the MPC relay.

The entity is tracking ~~2000~~2,000 trip coils (each consisting of multiple trip paths) in each of these two segments. But half of all of the trip paths are monitored~~,~~; therefore, the trip paths are continuously tested and the circuit will alarm when there is a failure~~; these~~. These alarms have to be verified every 12 years for correct operation.

The entity now has ~~1000~~1,000 trip coils (and associated trip paths) remaining that they have elected to count as control circuits. The entity has instituted a process that requires the verification of every trip path to each trip coil (one unit), including the electrical activation of the trip coil. (The entity notes that the trip coils will have to be tripped electrically more often than the trip path verification, and is taking care of this activity through other documentation of ~~real~~Real-time ~~fault~~Fault operations.)

They start out testing all of the trip coil circuits within the prescribed Table requirements (12-year max) by testing the trip circuits every 10 years. The entity's plan is to test 100 units per year; this is greater than the minimum sample size requirement of 30. For the sake of example only, the following will show three failures per year; reality may well have different numbers of failures every year. PBM requires annual assessment of failures found per units tested. After the first year of tests, the entity finds three failures in the 100 units tested. 3/100= three percent failure rate.

~~For the sake of example only the following will show 3 failures per year, reality may well have different numbers of failures every year. PBM requires annual assessment of failures found per units tested.~~

~~After the first year of tests the entity finds 3 failures in the 100 units tested. 3/100= 3% failure rate.~~

This entity is now allowed to extend the maintenance interval, if they choose. The entity chooses to extend the maintenance interval of this population segment out to 20 years. This represents a rate of 50 units tested per year; entity selects 50 units to be tested in the following year. After that year of testing these 50 units, the entity again finds ~~3~~three failed units. 3/50= ~~6%~~six percent failures.

This entity has now exceeded the acceptable failure rate for these devices and must accelerate testing of all of the units at a higher rate, such that the failure rate is found to be less than ~~4%~~four percent per year; the entity has three years to get this failure rate down to ~~4%~~four percent or less (per year).

In response to the ~~6%~~six percent failure rate, the entity decreases the testing interval to 16 years. This means that they will now test 63 units per year (1000/16). The entity has just two years left to get the test rate corrected. After a year, they again find three failures out of the 63 units tested. 3/63= 4.76% failures.

~~After a year they again find 3 failures out of the 63 units tested. 3/63= 4.76% failures.~~

In response to the >~~4%~~four percent failure rate, the entity decreases the testing interval to 14 years. This means that they will now test 72 units per year (1000/14). The entity has just one

year left to get the test rate corrected. After a year, they again find ~~3~~three failures out of the 72 units tested. 3/72= 4.2% failures.

(Note that the entity has tried 10 years, and they were under the ~~4%~~four percent limit; and they tried 14 years, and they were over the ~~4%~~four percent limit. They must be back at ~~4%~~four percent failures or less in the next year, so they might simply elect to go back to 10 years.)

Instead, in response to the 4.2% failure rate, the entity decreases the testing interval to 12 years. This means that they will now test 84 units per year (1000/12). After a year, they again find three failures out of the 84 units tested. 3/84= 3.6% failures.

~~After a year they again find 3 failures out of the 84 units tested. 3/84= 3.6% failures.~~

Entity found that they could maintain the failure rate at no more than ~~4%~~four percent failures by maintaining the testing interval at 12 years or less. Entity chose 12-year interval, and effectively extended their TBM (10 years) program by 20~~%.~~ percent.

A note of practicality is that an entity will probably be in better shape to lengthen the intervals between tests if the failure rate is less than ~~2%.~~two percent. But the requirements allow for annual adjustments if the entity desires. As a matter of maintenance management, an ever-changing test rate (units tested / year) may be un-workable.

Note that the "~~5%~~five percent of ~~components~~Components" requirement effectively sets a practical limit of 20-year maximum PBM interval. Also of note is the "3 years" requirement; an entity might arbitrarily extend time intervals from ~~6~~six years to 20 years. In the event that an entity finds a failure rate greater than ~~4%~~four percent, then the test rate must be accelerated such that within three years the failure rate must be brought back down to ~~4%~~four percent or less.

Here is a table that demonstrates the values discussed:

Year #	Total Population (P)	Test Interval (I)	Units to be Tested (U= P/I)	# of Failures Found (F)	Failure Rate (=F/U)	Decision to Change Interval Yes or No	Interval Chosen
1	1000	10 yrs	100	3	3%	Yes	20 yrs
2	1000	20 yrs	50	3	6%	Yes	16yrs
3	1000	16 yrs	63	3	4.8%	Yes	14 yrs
4	1000	14 yrs	72	3	4.2%	Yes	12 yrs
5	1000	12 yrs	84	3	3.6%	No	12 yrs

Please provide an example of the calculations involved in extending maintenance time intervals using PBM for voltage and current sensing devices.

Note that the following example captures "voltage and current inputs to the protective relays" as all of the various current transformer and potential transformer signals associated with a particular set of relays used for protection of a specific element. This entity calls this set of protective relays a "Relay Scheme~~".~~." Thus, this entity chooses to count PT and CT signals as a group instead of individually tracking maintenance activities to specific bushing CT's or specific PT's. An entity is not restricted to this method of counting voltage and current devices, signals and paths. Perhaps another method an entity would prefer would be to simply track every individual PT and CT. Note that a generation maintenance group may well select the latter because they may elect to perform routine off-line tests during generator outages, whereas a transmission maintenance group might create a process that utilizes ~~real~~Real-time system values measured at the relays. Under the included definition of "Component":

The designation of what constitutes a control circuit ~~component~~Component is very dependent upon how an entity performs and tracks the testing of the control circuitry. Some entities test their control circuits on a breaker basis whereas others test their circuitry on a local zone of protection basis. Thus, entities are allowed the latitude to designate their own definitions of control circuit ~~components~~Components. Another example of where the entity has some discretion on determining what constitutes a single ~~component~~Component is the voltage and current sensing devices, where the entity may choose either to designate a full three-phase set of such devices or a single device as a single ~~component~~Component.

And in Attachment A (PBM) the definition of Segment:

Segment – *Protection Systems or ~~components~~Components of a consistent design standard, or a particular model or type from a single manufacturer that typically share other common ~~elements~~Elements. Consistent performance is expected across the entire population of a segment. A segment must contain at least sixty (60) individual ~~components~~Components.*

Example:

Entity has 2000 "Relay Schemes~~",~~," all of which have three current signals supplied from bushing ~~CT's~~CTs, and three voltage signals supplied from substation bus PT's. All cabling and circuitry was designed and built with a consistent (internal entity) standard, and this population is greater than the minimum sample requirement of 60.

For the sake of further example the following facts are given:

Half of all relay schemes (~~1000~~1,000) are supplied with current signals from ANSI STD C800 bushing ~~CT's~~CTs and voltage signals from ~~PT's~~PTs built by ACME Electric MFR CO. All of the relay panels and cable pulls were built with consistent standards, and consistent performance standard expectations exist for the consistent wiring, cabling and instrument transformers within the segment (which is greater than 60).

The other half of the entity's relay schemes have MPC relays with additional monitoring built-in that compare DNP values of voltages and currents (or Watts and VARs~~)~~), as interpreted by the MPC relays and alarm for an entity-accepted tolerance level of accuracy. This newer segment of their "Voltage and Current Sensing" population is different than the original segment, consistent (standards, construction and performance expectations) within the new segment and constitutes the remainder of the entity's population.

The entity is tracking many thousands of voltage and current signals within ~~2000~~2,000 relay schemes (each consisting of multiple voltage and current signals) in each of these two segments. But half of all of the relay schemes voltage and current signals are monitored~~,~~; therefore, the voltage and current signals are continuously tested and the circuit will alarm when there is a failure; these alarms have to be verified every 12 years for correct operation.

The entity now has ~~1000~~1,000 relay schemes worth of voltage and current signals remaining that they have elected to count within their relay schemes designation. The entity has instituted a process that requires the verification of these voltage and current signals within each relay scheme (one unit).

(Please note - a problem discovered with a current or voltage signal found at the relay could be caused by anything from the relay, all the way to the signal source itself. Having many sources of problems can easily increase failure rates beyond the rate of failures of just one item (for example just ~~PT's).~~PTs). It is the intent of the SDT to minimize failure rates of all of the equipment to an acceptable level; thus, any failure of any item that gets the signal from source to relay is counted. It is for this reason that the SDT chose to set the boundary at the ability of the signal to be delivered all the way to the relay~~.)~~.

The entity will start out measuring all of the relay scheme voltage and currents at the individual relays within the prescribed Table requirements (12 year max) by measuring the voltage and current values every 10 years. The entity's plan is to test 100 units per year; this is greater than the minimum sample size requirement of 30. For the sake of example only, the following will show ~~3~~thre failures per year~~,~~; reality may well have different numbers of failures every year. PBM requires annual assessment of failures found per units tested. After the first year of tests, the entity finds ~~3~~three failures in the 100 units tested. 3/100= ~~3%~~three percent failure rate.

This entity is now allowed to extend the maintenance interval, if they choose. The entity chooses to extend the maintenance interval of this population segment out to 20 years. This represents a rate of 50 units tested per year; entity selects 50 units to be tested in the following year.~~This represents a rate of 50 units tested per year; entity selects 50 units to be tested in the following year.~~ After that year of testing these 50 units, the entity again finds ~~3~~three failed units. 3/50= ~~6%~~six percent failures.

This entity has now exceeded the acceptable failure rate for these devices and must accelerate testing of all of the units at a higher rate, such that the failure rate is found to be less than ~~4%~~four percent per year; the entity has three years to get this failure rate down to ~~4%~~four percent or less (per year).

In response to the ~~6%~~six percent failure rate, the entity decreases the testing interval to 16 years. This means that they will now test 63 units per year (1000/16). The entity has just two years left to get the test rate corrected. After a year, they again find three failures out of the 63 units tested. 3/63= 4.76% failures.

~~After a year they again find 3 failures out of the 63 units tested. 3/63= 4.76% failures.~~

In response to the >~~4%~~four percent failure rate, the entity decreases the testing interval to 14 years. This means that they will now test 72 units per year (1000/14). The entity has just one year left to get the test rate corrected. After a year, they again find ~~3~~three failures out of the 72 units tested. 3/72= 4.2% failures.

(Note that the entity has tried 10 years, and they were under the ~~4%~~four percent limit; and they tried 14 years, and they were over the ~~4%~~four percent limit. They must be back at ~~4%~~four percent failures or less in the next year, so they might simply elect to go back to 10 years.)

Instead, in response to the 4.2% failure rate, the entity decreases the testing interval to 12 years. This means that they will now test 84 units per year (~~1000~~1,000/12). After a year, they again find three failures out of the 84 units tested. 3/84= 3.6% failures.

~~After a year they again find 3 failures out of the 84 units tested. 3/84= 3.6% failures.~~

Entity found that they could maintain the failure rate at no more than ~~4%~~four percent failures by maintaining the testing interval at 12 years or less. Entity chose 12-year interval and effectively extended their TBM (10 years) program by 20~~%.~~ percent.

A note of practicality is that an entity will probably be in better shape to lengthen the intervals between tests if the failure rate is less than ~~2%.~~two percent. But the requirements allow for annual adjustments, if the entity desires. As a matter of maintenance management, an ever-changing test rate (units tested~~/~~/year) may be un-workable.

Note that the "5% of ~~components~~Components" requirement effectively sets a practical limit of 20-year maximum PBM interval. Also of note is the "3 years" requirement; an entity might arbitrarily extend time intervals from ~~6~~six years to 20 years. In the event that an entity finds a failure rate greater than ~~4%~~four percent, then the test rate must be accelerated such that within three years the failure rate must be brought back down to ~~4%~~four percent or less.

Here is a table that demonstrates the values discussed:

Year #	Total Population (P)	Test Interval (I)	Units to be Tested (U= P/I)	# of Failures Found (F)	Failure Rate (=F/U)	Decision to Change Interval Yes or No	Interval Chose
1	1000	10 yrs	100	3	3%	Yes	20 yrs
2	1000	20 yrs	50	3	6%	Yes	16yrs
3	1000	16 yrs	63	3	4.8%	Yes	14 yrs
4	1000	14 yrs	72	3	4.2%	Yes	12 yrs
5	1000	12 yrs	84	3	3.6%	No	12 yrs

10. Overlapping the Verification of Sections of the Protection System

Tables 1-1 through 1-5 require that every Protection System ~~component~~Component be periodically verified. One approach, but not the only method, is to test the entire protection scheme as a unit, from the secondary windings of voltage and current sources to breaker tripping. For practical ongoing verification, sections of the Protection System may be tested or monitored individually. The boundaries of the verified sections must overlap to ensure that there are no gaps in the verification. See Appendix A of this Supplementary Reference for additional discussion on this topic.

All of the methodologies expressed within this report may be combined by an entity, as appropriate, to establish and operate a maintenance program. For example, a Protection System may be divided into multiple overlapping sections with a different maintenance methodology for each section:

- Time-based maintenance with appropriate maximum verification intervals for categories of equipment, as given in the Tables 1-1 through 1-5;
- Monitoring as described in Tables 1-1 through 1-5;
- A Performance-Based Maintenance program as described in Section 9 above, or Attachment A of the ~~Standard~~standard;
- Opportunistic verification using analysis of ~~fault~~Fault records, as described in Section 11

10.1 Frequently Asked ~~Question~~Questions:

My system has alarms that are gathered once daily through an auto-polling system; this is not really a conventional SCADA system but does it meet the Table 1 requirements for inclusion as a monitored system?

Yes, provided the auto-polling that gathers the alarms reports those alarms to a location where the action can be initiated to correct the ~~issue.~~Unresolved Maintenance Issue. This location does not have to be the location of the engineer or the technician that will eventually repair the problem, but rather a location where the action can be initiated.

11. Monitoring by Analysis of Fault Records

Many users of microprocessor relays retrieve ~~fault~~Fault event records and oscillographic records by data communications after a ~~fault.~~Fault. They analyze the data closely if there has been an apparent ~~misoperation~~Misoperation, as NERC ~~Standards~~standards require. Some advanced users have commissioned automatic ~~fault~~Fault record processing ~~systems~~Systems that gather and archive the data. They search for evidence of ~~component~~Component failures or setting problems hidden behind an operation whose overall outcome seems to be correct. The relay data may be augmented with independently captured ~~digital fault recorder~~Digital Fault Recorder (DFR) data retrieved for the same event.

Fault data analysis comprises a legitimate CBM program that is capable of reducing the need for a manual time-interval based check on Protection Systems whose operations are analyzed. Even electromechanical Protection Systems instrumented with DFR channels may achieve some CBM benefit. The completeness of the verification then depends on the number and variety of ~~faults~~Faults in the vicinity of the relay that produce relay response records~~,~~ and the specific data captured.

A typical ~~fault~~Fault record will verify particular parts of certain Protection Systems in the vicinity of the ~~fault.~~Fault. For a given Protection System installation, it may or may not be possible to gather within a reasonable amount of time an ensemble of internal and external ~~fault~~Fault records that completely verify the Protection System.

For example, ~~fault~~Fault records may verify that the particular relays that tripped are able to trip via the control circuit path that was specifically used to clear that ~~fault.~~Fault. A relay or DFR record may indicate correct operation of the protection communications channel. Furthermore, other nearby Protection Systems may verify that they restrain from tripping for a ~~fault~~Fault just outside their respective zones of protection. The ensemble of internal ~~fault~~Fault and nearby external ~~fault~~Fault event data can verify major portions of the Protection System, and reset the time clock for the Table 1 testing intervals for the verified ~~components~~Components only.

What can be shown from the records of one operation is very specific and limited. In a panel with multiple relays, only the specific relay(s) whose operation can be observed without ambiguity should be used. Be careful about using ~~fault~~Fault response data to verify that settings or calibration are correct. Unless records have been captured for multiple ~~faults~~Faults close to either side of a setting boundary, setting or calibration could still be incorrect.

PMU data, much like DME data, can be utilized to prove various ~~components~~Components of the Protection System. Obviously, care must be taken to attribute proof only to the parts of a Protection System that can actually be proven using the PMU or DME data.

If ~~fault~~Fault record data is used to show that portions or all of a Protection System have been verified to meet Table 1 requirements, the owner must retain the ~~fault~~Fault records used, and the maintenance-related conclusions drawn from this data and used to defer Table 1 tests, for at least the retention time interval given in Section 8.2.

11.1 Frequently Asked ~~Question~~Questions:

I use my protective relays for ~~fault~~Fault and ~~disturbance~~Disturbance recording, collecting oscillographic records and event records via communications for ~~fault~~Fault analysis to meet NERC and DME requirements. What are the maintenance requirements for the relays?

For relays used only as ~~disturbance monitoring equipment, the~~Disturbance Monitoring Equipment, NERC Standard PRC-018-1 R3 & R6 states the maintenance requirements~~,~~ and is being addressed by a ~~Standards~~standards activity that is revising PRC-002-1 and PRC-018-1. For protective relays "that are designed to provide protection for the BES," this ~~Standard~~standard applies, even if they also perform DME functions.

12. Importance of Relay Settings in Maintenance Programs

In manual testing programs, many utilities depend on pickup value or zone boundary tests to show that the relays have correct settings and calibration. Microprocessor relays, by contrast, provide the means for continuously monitoring measurement accuracy. Furthermore, the relay digitizes inputs from one set of signals to perform all measurement functions in a single self-monitoring microprocessor system. These relays do not require testing or calibration of each setting.

However, incorrect settings may be a bigger risk with microprocessor relays than with older relays. Some microprocessor relays have hundreds or thousands of settings, many of which are critical to Protection System performance.

Monitoring does not check measuring ~~element~~Element settings. Analysis of ~~fault~~Fault records may or may not reveal setting problems. To minimize risk of setting errors after commissioning, the user should enforce strict settings data base management, with reconfirmation (manual or automatic) that the installed settings are correct whenever maintenance activity might have changed them~~. For~~; for background and guidance, see [5] in References.

Table 1 requires that settings must be verified to be as specified. The reason for this requirement is simple~~.~~: With legacy relays (non-microprocessor protective relays~~)~~), it is necessary to know the value of the intended setting in order to test, adjust and calibrate the relay. Proving that the relay works per specified setting was the de facto procedure. However, with the advanced microprocessor relays, it is possible to change relay settings for the purpose of verifying specific functions and then neglect to return the settings to the specified values. While there is no specific requirement to maintain a settings management process, there remains a need to verify that the settings left in the relay are the intended, specified settings. This need may manifest itself after any of the following:

- One or more settings are changed for any reason.
- A relay fails and is repaired or replaced with another unit.
- A relay is upgraded with a new firmware version.

12.1 Frequently Asked Questions:

How do I approach testing when I have to upgrade firmware of a microprocessor relay?

The entity should ensure that the relay continues to function properly after implementation of firmware changes. Some entities may have a R&D department that might routinely run acceptance tests on devices with firmware upgrades before allowing the upgrade to be installed. Other entities may rely upon the vigorous testing of the firmware OEM. An entity has the latitude to install devices and/or programming that they believe will perform to their satisfaction. If an entity should choose to perform the maintenance activities specified in the Tables following a firmware upgrade, then they may, if they choose, reset the time clock on that set of maintenance activities so that they would not have to repeat the maintenance on its

regularly scheduled cycle. (However, for simplicity in maintenance schedules, some entities may choose to not reset this time clock; it is merely a suggested option.)

If I upgrade my old relays, then do I have to maintain my previous equipment maintenance documentation?

If an equipment item is repaired or replaced, then the entity can restart the maintenance-activity-time-interval-clock, if desired~~,~~; however, the replacement of equipment does not remove any documentation requirements. The requirements in the ~~Standard~~standard are intended to ensure that an entity has a maintenance plan, and that the entity adheres to minimum activities and maximum time intervals. The documentation requirements are intended to help an entity demonstrate compliance. For example, saving the dates and records of the last two maintenance activities is intended to demonstrate compliance with the interval. Therefore, if you upgrade or replace equipment, then you still must maintain the documentation for the previous equipment, thus demonstrating compliance with the time interval requirement prior to the replacement action.

We have a number of installations where we have changed our Protection System ~~components.~~Components. Some of the changes were upgrades, but others were simply system rating changes that merely required taking relays "out-of-service". What are our responsibilities when it comes to "out-of-service" devices?

Assuming that your system up-rates, upgrades and overall changes meet any and all other requirements and standards, then the requirements of PRC-005-2 are simple – if the Protection System ~~component~~Component performs a Protection System function, then it must be maintained. If the ~~component~~Component no longer performs Protection System functions, then it does not require maintenance activities under the Tables of PRC-005-2. While many entities might physically remove a ~~component~~Component that is no longer needed, there is no requirement in PRC-005-2 to remove such ~~component~~Component(s). Obviously, prudence would dictate that an "out-of-service" device is truly made inactive. There are no record requirements listed in PRC-005-2 for Protection System ~~components~~Components not used.

While performing relay testing of a protective device on our Bulk Electric System, it was discovered that the protective device being tested was either broken or out of calibration. Does this satisfy the relay testing requirement, even though the protective device tested bad, and may be unable to be placed back into service?

Yes, PRC-005-2 requires entities to perform relay testing on protective devices on a given maintenance cycle interval. By performing this testing, the entity has satisfied PRC-005-2 requirement, although the protective device may be unable to be returned to service under normal calibration adjustments. R5 states:

"R5. Each Transmission Owner, Generator Owner, and Distribution Provider shall demonstrate efforts to correct any identified ~~unresolved maintenance issues.~~Unresolved Maintenance Issues."

Also, when a failure occurs in a Protection System, power system security may be comprised, and notification of the failure must be conducted in accordance with relevant NERC ~~Standards~~standards.

If I show the protective device out of service while it is being repaired, then can I add it back as a new protective device when it returns? If not, my relay testing history would show that I was out of compliance for the last maintenance cycle.

The maintenance and testing requirements (R5) state "…shall demonstrate efforts to correct any identified ~~unresolved maintenance issues…"~~Unresolved Maintenance Issues…" The type of corrective activity is not stated; however, it could include repairs or replacements.

Your documentation requirements will increase, of course, to demonstrate that your device tested bad and had corrective actions initiated. Your regional entity might ask about the status of your corrective actions.

13. Self-Monitoring Capabilities and Limitations

Microprocessor relay proponents have cited the self-monitoring capabilities of these products for nearly 20 years. Theoretically, any element that is monitored does not need a periodic manual test. A problem today is that the community of manufacturers and users has not created clear documentation of exactly what is and is not monitored. Some unmonitored but critical elements are buried in installed ~~systems~~Systems that are described as self-monitoring.

To utilize the extended time intervals allowed by monitoring, the user must document that the monitoring attributes of the device match the minimum requirements listed in the Table 1.

Until users are able to document how all parts of a system which are required for the protective functions are monitored or verified (with help from manufacturers), they must continue with the unmonitored intervals established in Table 1 and Table 3.

Going forward, manufacturers and users can develop mappings of the monitoring within relays, and monitoring coverage by the relay of user circuits connected to the relay terminals.

To enable the use of the most extensive monitoring (and never again have a hands-on maintenance requirement), the manufacturers of the microprocessor-based self-monitoring ~~components~~Components in the Protection System should publish for the user a document or map that shows:

- How all internal ~~elements~~Elements of the product are monitored for any failure that could impact Protection System performance.
- Which connected circuits are monitored by checks implemented within the product; how to connect and set the product to assure monitoring of these connected circuits; and what circuits or potential problems are not monitored.

With this information in hand, the user can document monitoring for some or all sections by:

- Presenting or referencing the product manufacturer's documents.
- Explaining in a system design document the mapping of how every ~~component~~Component and circuit that is critical to protection is monitored by the microprocessor product(s) or by other design features.
- Extending the monitoring to include the alarm transmission facilities through which failures are reported within a given time frame to allocate where action can be taken to initiate resolution of the alarm attributed to an ~~unresolved maintenance issue~~Unresolved Maintenance Issue, so that failures of monitoring or alarming ~~systems~~Systems also lead to alarms and action.
- Documenting the plans for verification of any unmonitored ~~components~~Components according to the requirements of Table 1 and Table 3.

13.1 Frequently Asked ~~Question~~Questions:

I can't figure out how to demonstrate compliance with the requirements for the highest level of monitoring of Protection Systems. Why does this Maintenance Standard describe a maintenance program approach I cannot achieve?

Demonstrating compliance with the requirements for the highest level of monitoring any particular ~~component~~Component of Protection Systems is likely to be very involved, and may include detailed manufacturer documentation of complete internal monitoring within a device, comprehensive design drawing reviews, and other detailed documentation. This ~~Standard~~standard does not presume to specify what documentation must be developed; only that it must be documented.

There may actually be some equipment available that is capable of meeting these highest levels of monitoring criteria, in which case it may be maintained according to the highest level of monitoring shown on the Tables. However, even if there is no equipment available today that can meet this level of monitoring~~;~~, the ~~Standard~~standard establishes the necessary requirements for when such equipment becomes available.

By creating a roadmap for development, this provision makes the ~~Standard~~standard technology-neutral. The Standard Drafting Team wants to avoid the need to revise the ~~Standard~~standard in a few years to accommodate technology advances that may be coming to the industry.

14. Notification of Protection System Failures

When a failure occurs in a Protection System, power system security may be compromised, and notification of the failure must be conducted in accordance with relevant NERC ~~Standard~~standard(s). Knowledge of the failure may impact the system operator's decisions on acceptable ~~loading~~Loading conditions.

This formal reporting of the failure and repair status to the system operator by the Protection System owner also encourages the system owner to execute repairs as rapidly as possible. In some cases, a microprocessor relay or carrier set can be replaced in hours; wiring termination failures may be repaired in a similar time frame. On the other hand, a ~~component~~Component in an electromechanical or early-generation electronic relay may be difficult to find and may hold up repair for weeks. In some situations, the owner may have to resort to a temporary protection panel, or complete panel replacement.

15. Maintenance Activities

Some specific maintenance activities are a requirement to ensure reliability. An example would be that a BES entity could be prudent in its protective relay maintenance, but if its battery maintenance program is lacking, then reliability could still suffer. The NERC glossary outlines a Protection System as containing specific ~~components.~~Components. PRC-005-2 requires specific maintenance activities be accomplished within a specific time interval. As noted previously, higher technology equipment can contain integral monitoring capability that actually performs maintenance verification activities routinely and often; therefore, *manual intervention* to perform certain activities on these type ~~components~~Components may not be needed.

15.1 Protective Relays (Table 1-1)

These relays are defined as the devices that receive the input signal from the current and voltage sensing devices and are used to isolate a ~~faulted~~Faulted element of the BES. Devices that sense thermal, vibration, seismic, pressure, gas, or any other non-electrical inputs are excluded.

Non-microprocessor based equipment is treated differently than microprocessor-based equipment in the following ways~~,~~; the relays should meet the asset owners' tolerances~~.~~:

- Non-microprocessor devices must be tested with voltage and/or current applied to the device.
- Microprocessor devices may be tested through the integral testing of the device.
    - There is no specific protective relay commissioning test or relay routine test mandated.
    - There is no specific documentation mandated.

15.1.1 Frequently Asked ~~Question~~Questions:

What calibration tolerance should be applied on electromechanical relays?

Each entity establishes their own acceptable tolerances when applying protective relaying on their system. For some Protection System ~~components~~Components, adjustment is required to bring measurement accuracy within the parameters established by the asset owner based on the specific application of the ~~component.~~Component. A calibration failure is the result if testing finds the specified parameters to be out of tolerance.

15.2 Voltage & Current Sensing Devices (Table 1-3)

These are the current and voltage sensing devices, usually known as instrument transformers. There is presently a technology available (fiber-optic Hall-effect) that does not utilize conventional transformer technology; these devices and other technologies that produce quantities that represent the primary values of voltage and current are considered to be a type of voltage and current sensing devices included in this ~~Standard~~standard.

The intent of the maintenance activity is to verify the input to the protective relay from the device that produces the current or voltage signal sample.

There is no specific test mandated for these ~~components.~~Components. The important thing about these signals is to know that the expected output from these ~~components~~Components actually reaches the protective relay. Therefore, the proof of the proper operation of these ~~components~~Components also demonstrates the integrity of the wiring (or other medium used to convey the signal) from the current and voltage sensing device, all the way to the protective relay. The following observations apply~~.~~:

- There is no specific ratio test, routine test or commissioning test mandated.
- There is no specific documentation mandated.
- It is required that the signal be present at the relay.
- This expectation can be arrived at from any of a number of means; ~~(~~including, but not limited to, the following~~) by~~: By calculation, by comparison to other circuits, by commissioning tests, by thorough inspection, or by any means needed to verify the circuit meets the asset owner's Protection System maintenance program.
- An example of testing might be a saturation test of a CT with the test values applied at the relay panel; this, therefore, tests the CT, as well as the wiring from the relay all the back to the CT.
- Another possible test is to measure the signal from the voltage and/or current sensing devices, during ~~load~~Load conditions, at the input to the relay.
- Another example of testing the various voltage and/or current sensing devices is to query the microprocessor relay for the ~~real~~Real-time ~~loading~~Loading; this can then be compared to other devices to verify the quantities applied to this relay. Since the input devices have supplied the proper values to the protective relay, then the verification activity has been satisfied. Thus, event reports (and oscillographs) can be used to verify that the voltage and current sensing devices are performing satisfactorily.
- Still another method is to measure total watts and vars around the entire bus; this should add up to zero watts and zero vars, thus proving the voltage and/or current sensing devices system throughout the bus.
- Another method for proving the voltage and/or current-sensing devices is to complete commissioning tests on all of the transformers, cabling, fuses and wiring.
- Any other method that verifies the input to the protective relay from the device that produces the current or voltage signal sample.

15.2.1 Frequently Asked Questions:

What is meant by "…verify the current and voltage circuit inputs from the voltage and current sensing devices to the protective relays …" Do we need to perform ratio, polarity and saturation tests every few years?

No. You must verify that the protective relay is receiving the expected values from the voltage and current-sensing devices (typically voltage and current transformers). This can be as difficult as is proposed by the question (with additional testing on the cabling and substation wiring to ensure that the values arrive at the relays); or simplicity can be achieved by other verification methods. While some examples follow, these are not intended to represent an all-inclusive list; technology advances and ingenuity should not be excluded from making comparisons and verifications:

- Compare the secondary values, at the relay, to a metering circuit, fed by different current transformers, monitoring the same line as the questioned relay circuit.
- Compare the individual phase secondary values at the relay panel (with additional testing on the panel wiring to ensure that the values arrive at those relays) with the other phases, and verify that residual currents are within expected bounds.
- Observe all three phase currents and the residual current at the relay panel with an oscilloscope, observing comparable magnitudes and proper phase relationship, with additional testing on the panel wiring to ensure that the values arrive at the relays.
- Compare the values, as determined by the questioned relay (such as, but not limited to, a query to the microprocessor relay~~),~~) to another protective relay monitoring the same line, with currents supplied by different ~~CT's~~CTs.
- Compare the secondary values, at the relay with values measured by test instruments (such as, but not limited to multi-meters, voltmeter, clamp-on ammeters, etc~~).~~) and verified by calculations and known ratios to be the values expected. For example, a single PT on a 100KV bus will have a specific secondary value that, when multiplied by the PT ratio, arrives at the expected bus value of 100KV.
- Query SCADA for the power flows at the far end of the line protected by the questioned relay, compare those SCADA values to the values as determined by the questioned relay.
- Totalize the Watts and VARs on the bus and compare the totals to the values as seen by the questioned relay.

The point of the verification procedure is to ensure that all of the individual ~~components~~Components are functioning properly; and that~~,~~ an ongoing proactive procedure is in place to re-check the various ~~components~~Components of the protective relay measuring ~~systems~~Systems.

Is wiring insulation or hi-pot testing required by this Maintenance Standard?

No, wiring insulation and equipment hi-pot testing are not specifically required by the Maintenance Standard. However, if the method of verifying CT and PT inputs to the relay involves some other method than actual observation of current and voltage transformer secondary inputs to the relay, it might be necessary to perform some sort of cable integrity test

to verify that the instrument transformer secondary signals are actually making it to the relay and not being shunted off to ground. For instance, you could use CT excitation tests and PT turns ratio tests and compare to baseline values to verify that the instrument transformer outputs are acceptable. However, to conclude that these acceptable transformer instrument output signals are actually making it to the relay inputs, it also would be necessary to verify the insulation of the wiring between the instrument transformer and the relay.

My plant generator and transformer relays are electromechanical and do not have metering functions, as do microprocessor- based relays. In order for me to compare the instrument transformer inputs to these relays to the secondary values of other metered instrument transformers monitoring the same primary voltage and current signals, it would be necessary to temporarily connect test equipment, like voltmeters and clamp on ammeters, to measure the input signals to the relays. This practice seems very risky, and a plant trip could result if the technician were to make an error while measuring these current and voltage signals. How can I avoid this risk? Also, what if no other instrument transformers are available which monitor the same primary voltage or current signal?

Comparing the input signals to the relays to the outputs of other independent instrument transformers monitoring the same primary current or voltage is just one method of verifying the instrument transformer inputs to the relays, but is not required by the ~~Standard~~standard. Plants can choose how to best manage their risk. If online testing is deemed too risky, offline tests, such as, but not limited to, CT excitation test and PT turns ratio tests can be compared to baseline data and be used in conjunction with CT and PT secondary wiring insulation verification tests to adequately "verify the current and voltage circuit inputs from the voltage and current sensing devices to the protective relays …" while eliminating the risk of tripping an in service generator or transformer. Similarly, this same offline test methodology can be used to verify the relay input voltage and current signals to relays when there are no other instrument transformers monitoring available for purposes of signal comparison.

15.3 Control circuitry associated with protective functions (Table 1-5)

This ~~component~~Component of Protection Systems includes the trip coil(s) of the circuit breaker, circuit switcher or any other interrupting device. It includes the wiring from the batteries to the relays. It includes the wiring (or other signal conveyance) from every trip output to every trip coil. It includes any device needed for the correct processing of the needed trip signal to the trip coil of the interrupting device; this requirement is meant to capture inputs and outputs to and from a protective relay that are necessary for the correct operation of the protective functions. In short, every trip path must be verified; the method of verification is optional to the asset owner. An example of testing methods to accomplish this might be to verify, with a volt-meter, the existence of the proper voltage at the open contacts, the open circuited input circuit and at the trip coil(s). As every parallel trip path has similar failure modes, each trip path from relay to trip coil must be verified. Each trip coil must be tested to trip the circuit breaker (or other interrupting device) at least once. There is a requirement to operate the circuit breaker (or other interrupting device) at least once every six years as part of the complete functional test. If a suitable monitoring system is installed that verifies every parallel trip path, then the manual-intervention testing of those parallel trip paths can be eliminated~~,~~; however, the actual operation of the circuit breaker must still occur at least once every six years. This ~~6~~six-year tripping requirement can be completed as easily as tracking the ~~real~~Real-time

~~fault~~Fault-clearing operations on the circuit breaker, or tracking the trip coil(s) operation(s) during circuit breaker routine maintenance actions.

The circuit-interrupting device should not be confused with a motor-operated disconnect. The intent of this ~~Standard~~standard is to require maintenance intervals and activities on Protection Systems equipment, and not just all system isolating equipment.

It is necessary, however, to classify a device that actuates a high-speed auto-closing ground switch as an interrupting device, if this ground switch is utilized in a Protection System and forces a ground ~~fault~~Fault to occur that then results in an expected Protection System operation to clear the forced ground ~~fault.~~Fault. The SDT believes that this is essentially a transferred-tripping device without the use of communications equipment. If this high-speed ground switch is "…designed to provide protection for the BES…" then this device needs to be treated as any other Protection System ~~component.~~Component. The control circuitry would have to be tested within 12 years, and any electromechanically operated device will have to be tested every ~~6~~six years. If the spring-operated ground switch can be disconnected from the solenoid triggering unit, then the solenoid triggering unit can easily be tested without the actual closing of the ground blade.

The dc control circuitry also includes each auxiliary tripping relay (94) and each lock-out relay (86) that may exist in any particular trip scheme. If the lock-out relays (86) are electromechanical type ~~components~~Components, then they must be trip tested. The PSMT SDT considers these ~~components~~Components to share some similarities in failure modes as electromechanical protective relays; as such, there is a six-year maximum interval between mandated maintenance tasks unless PBM is applied.

Contacts of the 86 or 94 that pass the trip current on to the circuit interrupting device trip coils will have to be checked as part of the 12 year requirement. Normally-open contacts that are not used to pass a trip signal and normally-closed contacts do not have to be verified. Verification of the tripping paths is the requirement.

While relays that do not respond to electrical quantities are presently excluded from this standard, their control circuits are included if the relay is installed to detect ~~faults~~Faults on BES Elements. Thus, the control circuit of a BES transformer sudden pressure relay should be verified every 12 years, assuming its integrity is not monitored. While a sudden pressure relay control circuit is included within the scope of PRC-005-2, other alarming relay control circuits, (i.e~~.~~., SF-6 low gas~~,~~) are not included, even though they may trip the breaker being monitored.

New technology is also accommodated here; there are some tripping ~~systems~~Systems that have replaced the traditional hard-wired trip circuitry with other methods of trip-signal conveyance such as fiber-optics. It is the intent of the PSMT SDT to include this, and any other, technology that is used to convey a trip signal from a protective relay to a circuit breaker (or other interrupting device) within this category of equipment. The requirement for these ~~systems~~Systems is verification of the tripping path.

Monitoring of the control circuit integrity allows for no maintenance activity on the control circuit (excluding the requirement to operate trip coils and electromechanical lockout and/or tripping auxiliary relays). Monitoring of integrity means to monitor for continuity and/or presence of voltage on each trip path. For Ethernet or fiber-optic control ~~systems~~Systems,

monitoring of integrity means to monitor communication ability between the relay and the circuit breaker.

The trip path from a sudden pressure device is a part of the Protection System control circuitry. The sensing element is omitted from PRC-005-2 testing requirements because the SDT is unaware of industry-recognized testing protocol for the sensing elements. The SDT believes that Protection Systems that trip (or can trip) the BES should be included. This position is consistent with the currently-approved PRC-005-1, consistent with the SAR for Project 2007-17, and understands this to be consistent with the position of FERC staff.

15.3.1 Frequently Asked Questions:

Is it permissible to verify circuit breaker tripping at a different time (and interval) than when we verify the protective relays and the instrument transformers?

Yes, provided the entire Protective System is tested within the individual ~~components'~~Component's maximum allowable testing intervals.

The Protection System Maintenance Standard describes requirements for verifying the tripping of circuit breakers. What is this telling me about maintenance of circuit breakers?

Requirements in PRC-005-2 are intended to verify the integrity of tripping circuits, including the breaker trip coil, as well as the presence of auxiliary supply (usually a battery) for energizing the trip coil if a protection function operates. Beyond this, PRC-005-2 sets no requirements for verifying circuit breaker performance, or for maintenance of the circuit breaker.

How do I test each dc Control Circuit trip path, as established in Table 1-5 "Protection System Control Circuitry (Trip coils and auxiliary relays)"?

Table 1-5 specifies that each breaker trip coil and lockout relays that carry trip current to a trip coil must be operated within the specified time period. The required operations may be via targeted maintenance activities, or by documented operation of these devices for other purposes such as ~~fault~~Fault clearing.

Are high-speed ground switch trip coils included in the dc control circuitry?

Yes. PRC-005-2 includes high-speed grounding switch trip coils within the dc control circuitry to the degree that the initiating Protection Systems are characterized as "transmission Protection Systems."

Does the control circuitry and trip coil of a non-BES breaker, tripped via a BES protection ~~component~~Component, have to be tested per Table 1.5? (Refer to Table 3)

An example of an otherwise non-BES circuit breaker that is tripped via a BES protection ~~component~~Component might be (but is not limited to) a 12.5KV circuit breaker feeding (non-black-start) radial ~~loads~~Loads but has a trip that originates from an under-frequency (81) relay.

- The relay must be verified.
- The voltage signal to the relay must be verified.
- All of the relevant dc supply tests still apply.
- The unmonitored trip circuit between the relay and any lock-out or auxiliary relay must be verified every 12 years.

- The unmonitored trip circuit between the lock-out (or auxiliary relay) and the non-BES breaker does not have to be proven with an electrical trip.
- In the case where there is no lock-out or auxiliary tripping relay used, the trip circuit to the non-BES breaker does not have to be proven with an electrical trip.
- The trip coil of the non-BES circuit breaker does not have to be individually proven with an electrical trip.

Do I have to verify operation of breaker "a" contacts or any other normally closed auxiliary contacts in the trip path of each breaker as part of my control circuit test?

Operation of normally-closed contacts does not have to be verified. Verification of the tripping paths is the requirement. The continuity of the normally closed contacts will be verified when the tripping path is verified.

15.4 Batteries and DC Supplies (Table 1-4)

~~IEEE guidelines were consulted to arrive at the maintenance activities for batteries. The following guidelines were used: IEEE 450 (for Vented Lead-Acid batteries), IEEE 1188 (for Valve-Regulated Lead-Acid batteries) and IEEE 1106 (for Nickel-Cadmium batteries).~~

~~The currently proposed~~The NERC definition of a Protection System is:

- Protective relays which respond to electrical quantities,
- Communications ~~systems~~Systems necessary for correct operation of protective functions,
- Voltage and current sensing devices providing inputs to protective relays,
- Station dc supply associated with protective functions (including station batteries, battery chargers, and non-battery-based dc supply), and
- Control circuitry associated with protective functions through the trip coil(s) of the circuit breakers or other interrupting devices~~." ~~.

The station battery is not the only ~~component~~Component that provides dc power to a Protection System. In the new definition for Protection System, "station batteries" are replaced with "station dc supply" to make the battery charger and dc producing stored energy devices (that are not a battery) part of the Protection System that must be maintained.

The PSMT SDT recognizes that there are several technological advances in equipment and testing procedures that allow the owner to choose how to verify that a battery string is free of open circuits. The term "continuity" was introduced into the ~~Standard~~standard to allow the owner to choose how to verify continuity of a battery set by various methods, and not to limit the owner to ~~the two~~other conventional methods ~~recommended in the IEEE standards.~~of showing continuity. Continuity, as used in Table 1-4 of the ~~Standard~~standard, refers to verifying that there is a continuous current path from the positive terminal of the station battery set to the negative terminal. Without verifying continuity of a station battery, there is no way to determine that the station battery is available to supply dc power to the station. An open battery string will be an unavailable power source in the event of loss of the battery charger.

Batteries cannot be a unique population segment of a Performance-Based Maintenance Program (PBM) because there are too many variables in the electrochemical process to

completely isolate all of the performance-changing criteria necessary for using PBM on battery ~~systems.~~Systems. However, nothing precludes the use of a PBM process for any other part of a dc supply besides the batteries themselves.

15.4.1 Frequently Asked Questions:

What constitutes the station dc supply, as mentioned in the definition of Protective System?

The previous definition of Protection System includes batteries, but leaves out chargers. The latest definition includes chargers, as well as dc ~~systems~~Systems that do not utilize batteries. This revision of PRC-005-2 is intended to capture these devices that were not included under the previous definition. The station direct current (dc) supply normally consists of two ~~components~~Components: the battery charger and the station battery itself. There are also emerging technologies that provide a source of dc supply that does not include either a battery or charger.

Battery Charger - The battery charger is supplied by an available ac source. At a minimum, the battery charger must be sized to charge the battery (after discharge) and supply the constant dc ~~load~~Load. In many cases, it may be sized also to provide sufficient dc current to handle the higher energy requirements of tripping breakers and switches when actuated by the protective relays in the Protection System.

Station Battery - Station batteries provide the dc power required for tripping and for supplying normal dc power to the station in the event of loss of the battery charger. There are several technologies of battery that require unique forms of maintenance as established in Table 1-4.

Emerging Technologies - Station dc supplies are currently being developed that use other energy storage technologies ~~beside~~besides the station battery to prevent loss of the station dc supply when ac power is lost. Maintenance of these station dc supplies will require different kinds of tests and inspections. Table 1-4 presents maintenance activities and maximum allowable testing intervals for these new station dc supply technologies. However, because these technologies are relatively new, the maintenance activities for these station dc supplies may change over time.

What did the PSMT SDT mean by "continuity" of the dc supply?

The PSMT SDT recognizes that there are several technological advances in equipment and testing procedures that allow the owner to choose how to verify that a battery string is free of open circuits. The term "continuity" was introduced into the ~~Standard~~standard to allow the owner to choose how to verify continuity (no open circuits) of a battery set by various methods, and not to limit the owner to ~~the two~~other conventional methods ~~recommended in the IEEE standards.~~of showing continuity – lack of an open circuit. Continuity, as used in Table 1-4 of the ~~Standard~~standard, refers to verifying that there is a continuous current path from the positive terminal of the station battery set to the negative terminal~~.~~ (no open circuit). Without verifying continuity of a station battery, there is no way to determine that the station battery is available to supply dc power to the station. Whether it is caused from an open cell or a bad external connection, an open battery string will be an unavailable power source in the event of loss of the battery charger.

The current path through a station battery from its positive to its negative connection to the dc control circuits is composed of two types of elements. These path elements are the

electrochemical path through each of its cells and all of the internal and external metallic connections and terminations of the batteries in the battery set. If there is loss of continuity (an open circuit) in any part of the electrochemical or metallic path, the battery set will not be available for service. In the event of the loss of the ac source or battery charger, the battery must be capable of supplying dc current, both for continuous dc ~~loads~~Loads and for tripping breakers and switches. Without continuity, the battery cannot perform this function.

At generating stations and large transmission stations where battery chargers are capable of handling the maximum current required by the Protection System, there are still problems that could potentially occur when the continuity through the connected battery is interrupted.

- Many battery chargers produce harmonics which can cause failure of dc power supplies in microprocessor-based protective relays and other electronic devices connected to station dc supply. In these cases, the substation battery serves as a filter for these harmonics. With the loss of continuity in the battery, the filter provided by the battery is no longer present.
- Loss of electrical continuity of the station battery will cause, in most battery chargers, regardless of the battery charger's output current capability, a delayed response in full output current from the charger. Almost all chargers have an intentional ~~1~~one- to ~~2~~ two-second delay to switch from a low substation dc ~~load~~Load current to the maximum output of the charger. This delay would cause the opening of circuit breakers to be delayed, which could violate system performance standards.

Monitoring of the station dc supply voltage will not indicate that there is a problem with the dc current path through the battery, unless the battery charger is taken out of service. At that time, a break in the continuity of the station battery current path will be revealed because there will be no voltage on the station dc circuitry. This particular test method, while proving battery continuity, may not be acceptable to all installations.

Although the ~~Standard~~standard prescribes what must be accomplished during the maintenance activity, it does not prescribe how the maintenance activity should be accomplished. There are several methods that can be used to verify the electrical continuity of the battery. These are not the only possible methods, simply a sampling of some methods:

- One method is to measure that there is current flowing through the battery itself by a simple clamp on milliamp-range ammeter. A battery is always either charging or discharging. Even when a battery is charged, there is still a measurable float charge current that can be detected to verify that there is continuity in the electrical path through the battery.
- A simple test for continuity is to remove the battery charger from service and verify that the battery provides voltage and current to the dc system. However, the behavior of the various dc-supplied equipment in the station should be considered before using this approach.
- Manufacturers of microprocessor-controlled battery chargers have developed methods for their equipment to periodically (or continuously) test for battery continuity. For example, one manufacturer periodically reduces the float voltage on the battery until current from the battery to the dc ~~load~~Load can be measured to confirm continuity.

- Applying test current (as in some ohmic testing devices, or devices for locating dc grounds) will provide a current that when measured elsewhere in the string, will prove that the circuit is continuous.
- Internal ohmic measurements of the cells and units of ~~Lead-Acid Batteries~~lead-acid batteries (VRLA & VLA) can detect lack of continuity within the cells of a battery string; and when used in conjunction with resistance measurements of the battery's external connections, can prove continuity. Also some methods of taking internal ohmic measurements, by their very nature, can prove the continuity of a battery string without having to use the results of resistance measurements of the external connections.
- Specific ~~Gravity~~gravity tests can infer continuity because, without continuity, there could be no charging occurring; and if there is no charging, then ~~Specific Gravity~~specific gravity will go down below acceptable levels.

No matter how the electrical continuity of a battery set is verified, it is a necessary maintenance activity that must be performed at the intervals prescribed by Table 1-4 to insure that the station dc supply has a path that can provide the required current to the Protection System at all times.

When should I check the station batteries to see if they have sufficient energy to perform as ~~designed~~manufactured?

The answer to this question depends on the type of battery (~~Valve Regulated Lead Acid, Vented Lead Acid~~valve-regulated lead-acid, vented lead-acid, or ~~Nickel Cadmium),~~nickel-cadmium) and the maintenance activity chosen.

For example, if you have a ~~Valve-Regulated Lead-Acid~~valve-regulated lead-acid (VRLA) station battery, and you have chosen to evaluate the measured cell/unit internal ohmic values to the battery cell's baseline, you will have to perform verification at a maximum maintenance interval of no greater than every six months. While this interval might seem to be quite short, keep in mind that the ~~6~~ six-month interval is ~~consistent with IEEE guidelines~~important for VRLA batteries; this interval provides an accumulation of data that better shows when a VRLA battery is ~~no longer capable of its design capacity~~incapable of performing as manufactured.

If, for a VRLA station battery, you choose to conduct a performance capacity test on the entire station battery as the maintenance activity, then you will have to perform verification at a maximum maintenance interval of no greater than every ~~3~~three calendar years.

How is a baseline established for cell/unit internal ohmic measurements?

Establishment of cell/unit internal ohmic baseline measurements should be completed when lead-acid batteries are newly installed. To ensure that the baseline ohmic cell/unit values are most indicative of the station ~~batteries ability to perform as designed they should be made upon installation of the station battery and the completion of a performance test of the battery's capacity.~~ battery's ability to perform as manufactured, they should be made at some point in time after the installation to allow the cell chemistry to stabilize after the initial freshening charge. An accepted industry practice for establishing baseline values is after six-months of installation, with the battery fully charged and in service. However, it is recommended that each owner, when establishing a baseline, should consult the battery manufacturer for specific instructions on establishing an ohmic baseline for their product, if available.

When internal ohmic measurements are taken, consistent test equipment should be used to establish the baseline and used for the future trending of the cells internal ohmic measurements because of variances in test equipment and the type of ohmic measurement used by different manufacturer's equipment. Keep in mind that one manufacturer's "Conductance" test equipment does not produce similar results as another manufacturer's "Impedance" test equipment, even though both manufacturers have produced "Ohmic" test equipment.

For all new installations of ~~Valve-Regulated Lead-Acid~~valve-regulated lead-acid (VRLA) batteries and ~~Vented Lead-Acid~~vented lead-acid (VLA) batteries, where trending of the cells internal ohmic measurements to a baseline are to be used to determine the ability of the station battery to perform as ~~designed~~manufactured, the establishment of the baseline, as described above, should be followed at the time of installation to insure the most accurate trending of the cell/unit. However, often for older VRLA batteries, the owners of the station batteries have not established a baseline at installation. Also for owners of VLA batteries who want to establish a maintenance activity which requires trending of measured ohmic values to a baseline, there was typically no baseline established at installation of the station battery to trend to.

To resolve the problem of the unavailability of baseline internal ohmic measurements for the individual cell/unit of a station battery, many manufacturers of internal ohmic measurement devices have established libraries of baseline values for VRLA and VLA batteries using their testing device. Also, several of the battery manufacturers have libraries of baselines for their products that can be used to trend to. However, it is important that when using battery manufacturer-supplied data that it is verified that the baseline readings to be used were taken with the same ohmic testing device that will be used for future measurements (for example "Conductance Readings" from one manufacturer's test equipment do not correlate to "Impedance Readings" from a different manufacturer's test equipment). ~~Of course, a measurement of "Conductance" from one manufacturer in a given year could be trended against a measurement of "Conductance" from a different manufacturer's device. This would be true for any unit measurements whether it is conductance, impedance, resistance, voltage, amperage, etc.~~

Although many manufacturers may have provided ~~base-line~~baseline values, which will allow trending of the internal ohmic measurements over the remaining life of a station battery, these baselines are not the actual cell/unit measurements for the battery being trended. It is important to have a baseline tailored to the station battery to more accurately use the tool of ohmic measurement trending. That more customized baseline can only be created by following the establishment of a baseline for each cell/unit at the time of installation of the station battery.

Why determine the State of Charge?

Even though there is no present requirement to check the state of charge of a battery, it can be a very useful tool in determining the overall condition of a battery system. The following discussions are offered as a general reference.

When a battery is fully charged, the battery is available to deliver its existing capacity. As a battery is discharged, its ability to deliver its maximum available capacity is diminished. It is necessary to determine if the state of charge has dropped to an unacceptable level.

~~IEEE Standards 450, 1188, and 1106 for Vented Lead-Acid (VLA), Valve-Regulated Lead-Acid (VRLA), and Nickel-Cadmium (NiCd) batteries respectively discuss state of charge in great detail in their standards or annexes to their standards. The above IEEE standards are excellent sources for describing how to determine state of charge of the battery system.~~

What is State of Charge and how can it be determined in a station battery?

The state of charge of a battery refers to the ratio of residual capacity at a given instant to the maximum capacity available from the battery. When a battery is fully charged, the battery is available to deliver its existing capacity. As a battery is discharged, its ability to deliver its maximum available capacity is diminished. Knowing the amount of energy left in a battery compared with the energy it had when it was fully charged gives the user an indication of how much longer a battery will continue to perform before it needs recharging.

For ~~Vented Lead-Acid~~vented lead-acid (VLA) batteries which use accessible liquid electrolyte, a hydrometer can be used to test the specific gravity of each cell as a measure of its state of charge. The hydrometer depends on measuring changes in the weight of the active chemicals. As the battery discharges, the active electrolyte, sulfuric acid, is consumed and the concentration of the sulfuric acid in water is reduced. This, in turn, reduces the specific gravity of the solution in direct proportion to the state of charge. The actual specific gravity of the electrolyte can, therefore, be used as an indication of the state of charge of the battery. Hydrometer readings may not tell the whole story, as it takes a while for the acid to get mixed up in the cells of a VLA battery. If measured right after charging, you might see high specific gravity readings at the top of the cell, even though it is much less at the bottom. Conversely, if taken shortly after adding water to the cell, the specific gravity readings near the top of the cell will be lower than those at the bottom.

Nickel-~~Cadmium~~cadmium batteries, where the specific gravity of the electrolyte does not change during battery charge and discharge, and ~~Valve-Regulated Lead-Acid~~valve-regulated lead-acid (VRLA) batteries, where the electrolyte is not accessible, cannot have their state of charge determined by specific gravity readings. For these two types of batteries, and also for VLA batteries, where another method besides taking hydrometer readings is desired, the state of charge may be determined by using the battery charger and taking voltage and current readings during float and equalize (high-rate charge mode). This method is an effective means of determining when the state of charge is low and when it is approaching a fully-charged condition, which gives the assurance that the available battery capacity will be maximized.

Why determine the Connection Resistance?

High connection resistance can cause abnormal voltage drop or excessive heating during discharge of a station battery. During periods of a high rate of discharge of the station battery, a very high resistance can cause severe damage. The maintenance requirement to verify battery terminal connection resistance in Table 1-4 is established to verify that the integrity of all battery electrical connections is acceptable. This verification includes cell-to-cell (intercell) and external circuit terminations. Your method of checking for acceptable values of intercell and terminal connection resistance could be by individual readings, or a combination of the two. There are test methods~~,~~ presently~~,~~ that can read post termination resistances and resistance values between external posts~~, there~~. There are also test methods presently available that take a combination reading of the post termination connection resistance plus the intercell resistance value plus the post termination connection resistance value. Either of the two methods, or any other method, that can show if the adequacy of connections at the battery posts is acceptable.

Adequacy of the electrical terminations can be determined by comparing resistance measurements for all connections taken at the time of station battery's installation to the same resistance measurements taken at the maintenance interval chosen, not to exceed the

maximum maintenance interval of Table 1-4. Trending of the interval measurements to the baseline measurements will identify any degradation in the battery connections. When the connection resistance values exceed the acceptance criteria for the connection, the connection is typically disassembled, cleaned, reassembled and measurements taken to verify that the measurements are adequate when compared to the baseline readings.

~~IEEE Standard 450 for Vented Lead-Acid (VLA) batteries "informative" annex F, and IEEE Standard 1188 for Valve-Regulated Lead-Acid (VRLA) batteries "informative" annex D provide excellent information and examples on performing connection resistance measurements using a microohmmeter and connection detail resistance measurements. Although this information is contained in standards for lead acid batteries the information contained is applicable to Nickel Cadmium batteries also.~~

What conditions should be inspected for visible battery cells?

The maintenance requirement to inspect the cell condition of all station battery cells where the cells are visible is a maintenance requirement of Table 1-4. Station batteries are different from any other ~~component~~Component in the Protection Station because they are a perishable product due to the electrochemical process which is used to produce dc electrical current and voltage. This inspection is a detailed visual inspection of the cells for abnormalities that occur in the aging process of the cell. In VLA battery visual inspections, some of the things that the inspector is typically looking for on the plates are signs of sulfation of the plates, abnormal color (possible copper contamination) and abnormal conditions such as cracked grids. The visual inspection could look for symptoms of hydration that would indicate that the battery has been left in a completely discharged state for a prolonged period. Besides looking at the plates for signs of aging, all internal connections, such as the bus bar connection to each plate, and the connections to all posts of the battery need to be visually inspected for abnormalities. In a complete visual inspection for the condition of the cell the cell plates, separators and sediment space of each cell must be looked at for signs of deterioration. An inspection of the station battery's cell condition also includes looking at all terminal posts and cell-to-cell electric connections to ensure they are corrosion free. The case of the battery containing the cell, or cells, must be inspected for cracks and electrolyte leaks through cracks and the post seals.

This maintenance activity cannot be extended beyond the maximum maintenance interval of Table 1-4 by a Performance-Based Maintenance Program (PBM) because of the electrochemical aging process of the station battery, nor can there be any monitoring associated with it because there must be a visual inspection involved in the activity. A remote visual inspection could possibly be done, but its interval must be no greater than the maximum maintenance interval of Table 1-4.

~~*Why consider the ability of the station battery to perform as designed?*~~

~~Determining the ability of a station battery to perform as designed is critical in the process of determining when the station battery must be replaced or when an individual cell or battery unit must be removed or replaced. For lead acid batteries the ability to perform as designed can be determined in more than one manner.~~

~~The two acceptable methods for proving that a station lead acid battery can perform as designed are based on two different philosophies. The first maintenance activity requires tests~~

~~and evaluation of the internal ohmic measurements on each of the individual cells/units of the station battery to determine that each component can perform as designed and therefore the entire station battery can be verified to perform as designed. The second activity requires a capacity discharge test of the entire station battery to verify that degradation of one or several components (cells) in the station battery has not deteriorated to a point where the total capacity of the station battery system falls below its designed rating.~~

~~The first maintenance activity listed in Table 1-4 for verifying that a station battery can perform as designed uses maximum maintenance intervals for evaluating internal ohmic measurements in relation to their baseline measurements that are based on industry experience, EPRI technical reports and application guides, and the IEEE battery standards. By evaluating the internal ohmic measurements for each cell and comparing that measurement to the cell's baseline ohmic measurement low capacity cells can be identified and eliminated or the whole station battery replaced to keep the station battery capable of performing as designed. Since the philosophy behind internal ohmic measurement evaluation is based on the fact that each battery component must be verified to be able to perform as designed, the interval for verification by this maintenance activity must be shorter to catch individual cell/unit degradation.~~

~~It should be noted that even if a lead acid battery unit is composed of multiple cells where the ohmic measurement of each cell cannot be taken, the ohmic test can still be accomplished. The data produced becomes trending data on the multi cell unit instead of trending individual cells. Care must be taken in the evaluation of the ohmic measures of entire units to detect a bad cell that has a poor ohmic value. Good ohmic values of other cells in the same battery unit can make it harder to detect the poor ohmic measurement of a bad cell because the only ohmic measurement available is of all the cells in the battery unit.~~

~~This first maintenance activity is applicable only for Vented Lead-Acid (VLA) and Valve-Regulated Lead-Acid (VRLA) batteries; this trending activity has not shown to be effective for NiCd batteries thus the only choices for owners of NiCd batteries are the performance tests of the second activity (see applicable IEEE guideline for specifics on performance tests).~~

~~The second maintenance activity listed in Table 1-4 for verifying that a station battery can perform as designed uses maximum maintenance intervals for capacity testing that were designed to align with the IEEE battery standards. This maintenance activity is applicable for Vented Lead-Acid, Valve-Regulated Lead-Acid, and Nickel-Cadmium batteries.~~

~~The maximum maintenance interval for discharge capacity testing is longer than the interval for testing and evaluation of internal ohmic cell measurements. An individual component of a station battery may degrade to an unacceptable level without causing the total station battery to fall below its designed rating under capacity testing.~~

~~IEEE Standards 450, 1188, and 1106 for vented lead-acid (VLA), Valve-Regulated Lead-Acid (VRLA), and Nickel-Cadmium (NiCd) batteries respectively (which together are the most commonly used substation batteries on the BES) go into great detail about capacity testing of the entire battery set to determine that a battery can perform as designed or needs to be replaced soon.~~

Why is it necessary to verify the battery string can perform as manufactured? I only care that the battery can trip the breaker, which means that the battery can perform as designed. I oversize my batteries so that even if the battery cannot perform as manufactured, it can still trip my breakers.

The fundamental answer to this question revolves around the concept of battery performance "as designed" vs. battery performance "as manufactured." The purpose of the various sections of Table 1-4 of this standard is to establish requirements for the Protection System owner to maintain the batteries, to ensure they will operate the equipment when there is an incident that requires dc power, and ensure the batteries will continue to provide adequate service until at least the next maintenance interval. To meet these goals, the correct battery has to be properly selected to meet the design parameters, and the battery has to deliver the power it was manufactured to provide.

When testing batteries, it may be difficult to determine the original design (i.e., Load profile) of the dc system. This standard is not intended as a design document, and requirements relating to design are, therefore, not included.

Where the dc load profile is known, the best way to determine if the system will operate as designed is to conduct a service test on the battery. However, a service test alone might not fully determine if the battery is healthy. A battery with 50 percent capacity may be able to pass a service test, but the battery would be in a serious state of deterioration and could fail at some point in the near future.

To ensure that the battery will meet the required Load profile and continue to meet the Load profile until the next maintenance interval, the installed battery must be sized correctly (i.e., a correct design), and it must be in a good state of health. Since the design of the dc system is not within the scope of the standard, the only consistent and reliable method to ensure that the battery is in a good state of health is to confirm that it can perform as manufactured. If the battery can perform as manufactured and it has been designed properly, the system should operate properly until the next maintenance interval.

How do I verify the battery string can perform as manufactured?

Optimally, actual battery performance should be verified against the manufacturer's rating curves. The best practice for evaluating battery performance is via a performance test. However, due to both logistical and system reliability concerns, some Protection System owners prefer other methods to determine if a battery can perform as manufactured. There are several battery parameters that can be evaluated to determine if a battery can perform as manufactured. Ohmic measurements and float current are two examples of parameters that have been reported to assist in determining if a battery string can perform as manufactured.

The evaluation of battery parameters in determining battery health is a complex issue, and is not an exact science. This standard gives the user an opportunity to utilize other measured parameters to determine if the battery can perform as manufactured. It is the responsibility of the Protection System owner, however, to maintain a documented process that demonstrates the chosen parameter(s) and associated methodology used to determine if the battery string can perform as manufactured.

Whichever parameter is evaluated (ohmic measurements, float current, float voltages, temperature, specific gravity, etc.), the goal is to determine the value of the measurement (or the percentage change) at which the battery fails to perform as manufactured, or the point

where the battery is deteriorating so rapidly that it will not perform as manufactured before the next maintenance interval.

This necessitates the need for establishing and documenting a baseline. A baseline may be required of every individual cell, a particular battery installation, or a specific make, model, or size of a cell. Given a consistent cell manufacturing process, it may be possible to establish a baseline number for the cell (make/model/type) and, therefore, a subsequent baseline for every installation would not be necessary. However, future installations of the same battery types should be spot-checked to ensure that your baseline remains applicable.

Consistency is the key when measuring and evaluating ohmic readings. Consistent testing methods by trained personnel are essential. Moreover, it is absolutely critical that personnel use the same make/model of test instrument every time readings are taken if the values are going to be compared. The type of probe, the location of the reading (post, connector, etc.) and the room temperature during the test needs to be carefully recorded when the readings are taken. For every subsequent time the readings are taken, the same make/model of the test instrument must be used, the same type of probes must be used, and the location of the reading must be the same.

A detailed understanding of the characteristic of a battery is also necessary if attempting to use float current as a measure of the ability of a battery to perform as manufactured. For example, trending of float current is a very effective way to determine the rate of antimony poisoning; and, thus, track the positive plate aging process in high antimony lead acid batteries (batteries with greater than 10 percent antimony in their grid lead alloys). The increased float current with age in these high lead antimony batteries can increase the positive plate aging process which gives an excellent indication of battery aging. Trending and evaluation of the measurements of float current on these high antimony lead acid batteries is an acceptable maintenance activity of Tables 1-4(a) and 1-4(b) for verifying the station battery can perform as manufactured. However, lead-calcium acid batteries do not have this property of being able to determine the aging of their grids by trending their float current, because their float current is constant over the life of the battery. Also the lower lead antimony (antimony two percent or lower) batteries do not exhibit this increase in float current as their plate structures age. When attempting to establish a trending program for lead-calcium or low lead antimony (such as lead-selenium) batteries, the Protection System owner should contact the manufacturer of the station battery to see if a trending process is recommended for determining aging of these products.

The establishment of a baseline may be different for various types of cells and for different types of installations. In some cases, it may be possible to obtain a baseline number from the battery manufacturer, although it is much more likely that the baseline will have to be established after the installation is complete. To some degree, the battery may still be "forming" after installation; consequently, determining a stable baseline may not be possible until several months after the battery has been in service.

The most important part of this process is to determine the point where the ohmic reading (or other measured parameter(s)) indicates that the battery cannot perform as manufactured. That point could be an absolute number, an absolute change, or a percentage change of an established baseline.

Since there are no universally-accepted repositories of this information, the Protection System owner will have to determine the value/percentage where the battery cannot perform as manufactured (heretofore referred to as a failed cell). This is the most difficult and important part of the entire process.

To determine the point where the battery fails to perform as manufactured, it is helpful to have a history of a battery type, if the data includes the parameter(s) used to evaluate the battery's ability to perform as manufactured against the actual demonstrated performance/capacity of a battery/cell.

For example, when an ohmic reading has been recorded that the user suspects is indicating a failed cell, a performance test of that cell (or string) should be conducted in order to prove/quantify that the cell has failed. Through this process, the user needs to determine the ohmic value at which the performance of the cell has dropped below 80 percent of the manufactured, rated performance. It is likely that there may be a variation in ohmic readings that indicates a failed cell (possibly significant). It is prudent to use the most conservative values to determine the point at which the cell should be marked for replacement. Periodically, the user should demonstrate that an "adequate" ohmic reading equates to an adequate battery performance (>80% of capacity).

Similarly, acceptance criteria for "good" and "failed" cells should be established for other parameters such as float current, specific gravity, etc., if used to determine the ability of a battery to function as designed.

What are some of the differences between lead-acid and nickel-cadmium batteries?

There is a marked difference in the aging process of lead acid and nickel-cadmium station batteries. The difference in the aging process of these two types of batteries is chiefly due to the electrochemical process of the battery type. Aging and eventual failure of lead acid batteries is due to expansion and corrosion of the positive grid structure, loss of positive plate active material, and loss of capacity caused by physical changes in the active material of the positive plates. In contrast, the primary failure of nickel-cadmium batteries is due to the gradual linear aging of the active materials in the plates. The electrolyte of a nickel-cadmium battery only facilitates the chemical reaction (it functions only to transfer ions between the positive and negative plates), but is not chemically altered during the process like the electrolyte of a lead acid battery. A lead acid battery experiences continued corrosion of the positive plate and grid structure throughout its operational life while a nickel-cadmium battery does not.

Changes to the properties of a lead acid battery when periodically measured and trended to a baseline, can indicate aging of the grid structure, positive plate deterioration, or changes in the active materials in the plate.

Because of the clear differences in the aging process of lead acid and nickel-cadmium batteries, there are no significantly measurable properties of the nickel-cadmium battery that can be measured at a periodic interval and trended to determine aging. For this reason, Table 1-4(c) (Protection System Station dc supply Using nickel-cadmium [NiCad] Batteries) only specifies one minimum maintenance activity and associated maximum maintenance interval necessary to verify that the station battery can perform as manufactured. This maintenance activity is to conduct a performance or modified performance capacity test of the entire battery bank.

Why in Table 1-4 of PRC-005-2 is there a maintenance activity to inspect the structural intergrity of the battery rack?

~~The three IEEE standards (1188, 450, and 1106) for VRLA, Vented Lead Acid, and Nickel-Cadmium batteries all recommend that as part of any battery inspection the battery rack should be inspected.~~ The purpose of this inspection is to verify that the battery rack is correctly installed and has no deterioration that could weaken its structural integrity.

Because the battery rack is specifically ~~designed~~manufactured for the battery that is mounted on it, weakening of its structural members by rust or corrosion can physically jeopardize the battery.

What is required to comply with the "Unintentional dc Grounds" requirement?

In most cases, the first ground that appears on a battery is not a problem. It is the unintentional ground that appears on the opposite pole that becomes problematic. Even then many ~~systems~~Systems are designed to operate favorably under some unintentional DC ground situations. It is up to the owner of the Protection System to determine if corrective actions are needed on detected unintentional DC grounds. The ~~Standard~~standard merely requires that a check be made for the existence of Unintentional DC Grounds. Obviously, a "check-off" of some sort will have to be devised by the inspecting entity to document that a check is routinely done for Unintentional DC Grounds because of the possible consequences to the Protection System.

Where the ~~Standard~~standard refers to "all cells~~"~~," is it sufficient to have a documentation method that refers to "all cells~~"~~," or do we need to have separate documentation for every cell? For example, do I need 60 individual documented check-offs for good electrolyte level, or would a single check-off per bank be sufficient?

A single check-off per battery bank is sufficient for documentation, as long as the single check-off attests to checking all cells/units.

Does this ~~Standard~~standard refer to Station batteries or all batteries~~,~~; for example, Communications Site Batteries?

This ~~Standard~~standard refers to Station Batteries. The drafting team does not believe that the scope of this ~~Standard~~standard refers to communications sites. The batteries covered under PRC-005-2 are the batteries that supply the trip current to the trip coils of the interrupting devices that are a part of the Protection System. The SDT believes that a loss of power to the communications ~~systems~~Systems at a remote site would cause the communications ~~systems~~Systems associated with protective relays to alarm at the substation. At this point, the corrective actions can be initiated.

My VRLA batteries have multiple-cells within an individual battery jar (or unit); how am I expected to comply with the cell-to-cell ohmic measurement requirements on these units that I cannot get to?

Measurement of cell/unit (not all batteries allow access to "individual cells" some "units" or jars may have multiple cells within a jar) internal ohmic values of all types of lead acid batteries where the cells of the battery are not visible is a station dc supply maintenance activity in Table 1-4.

What are cell/unit internal ohmic measurements?

With the introduction of Valve-Regulated Lead-Acid (VRLA) batteries to station dc supplies in the 1980's several of the standard maintenance tools that are used on Vented Lead-Acid (VLA) batteries were unable to be used on this new type of lead-acid battery to determine its state of health. The only tools that were available to give indication of the health of these new VRLA batteries were voltage readings of the total battery voltage, the voltage of the individual cells and periodic discharge tests.

In the search for a tool for determining the health of a VRLA battery several manufacturers studied the electrical model of a lead acid battery's current path through its cell. The overall battery current path consists of resistance and inductive and capacitive reactance. The inductive reactance in the current path through the battery is so minuscule when compared to the huge capacitive reactance of the cells that it is often ignored in most circuit models of the battery cell. Taking the basic model of a battery cell manufacturers of battery test equipment have developed and marketed testing devices to take measurements of the current path to detect degradation in the internal path through the cell.

In the battery industry, these various types of measurements are referred to as ohmic measurements. Terms used by the industry to describe ohmic measurements are ac conductance, ac impedance, and dc resistance. They are defined by the test equipment providers and IEEE and refer to the method of taking ohmic measurements of a lead acid battery. For example, in one manufacturer's ac conductance equipment measurements are taken by applying a voltage of a known frequency and amplitude across a cell or battery unit and observing the ac current flow it produces in response to the voltage. A manufacturer of an ac impedance meter measures ac current of a known frequency and amplitude that is passed through the whole battery string and determines the impedances of each cell or unit by measuring the resultant ac voltage drop across them. On the other hand, dc resistance of a cell is measured by a third ~~manfacturer's~~manufacturer's equipment by applying a dc ~~load~~Load across the cell or unit and measuring the step change in both the voltage and current to calculate the internal dc resistance of the cell or unit.

It is important to note that because of the rapid development of the market for ohmic measurement devices, there were no standards developed or used to mandate the test signals used in making ohmic measurements. Manufacturers using proprietary methods and applying different frequencies and magnitudes for their signals have developed a diversity of measurement devices. This diversity in test signals coupled with the three different types of ohmic measurements techniques (impedance conductance and resistance) make it impossible to always get the same ohmic measurement for a cell with different ohmic measurement devices. However, IEEE has recognized the great value for choosing one device for ohmic measurement, no matter who makes it or the method to calculate the ohmic measurement. The only caution given by IEEE and the battery manufacturers is that when trending the cells of a lead acid station battery consistent ohmic measurement devices should be used to establish the baseline measurement and to trend the battery set for its entire life. ~~A consistent measurement device should not be confused with a requirement to always stay with the same manufacturer. After all volts are volts, impedance is impedance, etc. It is just important to not expect to get consistent "Impedance" data if you switch to a "Conductance" measuring device in the middle of your trending program.~~

For VRLA batteries both IEEE Standard 1188 (Maintenance, Testing and Replacement of VRLA Batteries) and IEEE Standard 1187 (Installation Design and Installation of VRLA Batteries)

recognize the importance of the maintenance activity of establishing a baseline for "cell/unit internal ohmic measurements (impedance, conductance and resistance)" and trending them at frequent intervals over the life of the battery. There are extensive discussions about the need for taking these measurements in these standards. IEEE Standard 1188 requires taking internal ohmic values as described in Annex C4 during regular inspections of the station battery. For VRLA batteries IEEE Standard 1188 in talking about the necessity of establishing a ~~base line~~baseline and trending it over time says, ~~"~~"...depending on the degree of change a performance test, cell replacement or other corrective action may be necessary~~.~~..." (IEEE std 1188-2005, C.4 page 18).

For VLA batteries IEEE Standard 484 (Installation of VLA batteries) gives several guidelines about establishing baseline measurements on newly installed lead acid stationary batteries. The standard also discusses the need to look for significant changes in the ohmic measurements, the caution that measurement data will differ with each type of model of instrument used, and lists a number of factors that affect ohmic measurements.

At the beginning of the 21st century, EPRI conducted a series of extensive studies to determine the relationship of internal ohmic measurements to the capacity of a lead acid battery cell. The studies indicated that internal ohmic measurements were in fact a good indicator of a lead acid battery cell's capacity, but because users often were only interested in the total station battery capacity and the technology does not precisely predict overall battery capacity, if a user only needs "an accurate measure of the overall battery capacity~~"~~," they should "perform a battery capacity test."

Prior to the EPRI studies some large and small companies which owned and maintained station dc supplies in NERC Protection Systems developed maintenance programs where trending of ohmic measurements of cells/units of the station's battery became the maintenance activity for determining if the station battery could perform as ~~designed~~manufactured. By evaluation of the trending of the ohmic measurements over time, the owner could track the performance of the individual components of the station battery and determine if a total station battery or components of it required capacity testing, removal, replacement or in many instances replacement of the entire station battery. By taking this condition based approach these owners have eliminated having to perform capacity testing at prescribed intervals to determine if a battery needs to be replaced and are still able to effectively determine if a station battery can perform as ~~designed~~manufactured.

Why verify voltage?

There are two required maintenance activities associated with verification of dc voltages in Table 1-4. These two required activities are to verify station dc supply voltage and float voltage of the battery charger, and have different maximum maintenance intervals. Both of these voltage verification requirements relate directly to the battery charger maintenance.

The verification of the dc supply voltage is simply an observation of battery voltage to prove that the charger has not been lost or is not malfunctioning; a reading taken from the battery charger panel meter or even SCADA values of the dc voltage could be some of the ways that one could satisfy the requirements. Low battery voltage below float voltage indicates that the battery may be on discharge and, if not corrected, the station battery could discharge down to some extremely low value that will not operate the Protection System. High voltage, close to or above the maximum allowable dc voltage for equipment connected to the station dc supply

indicates the battery charger may be malfunctioning by producing high dc voltage levels on the Protection System. If corrective actions are not taken to bring the high voltage down, the dc power supplies and other electronic devices connected to the station dc supply may be damaged. The maintenance activity of verifying the float voltage of the battery charger is not to prove that a charger is lost or producing high voltages on the station dc supply, but rather to prove that the charger is properly floating the battery within the proper voltage limits. As above, there are many ways that this requirement can be met.

Why check for the electrolyte level?

In ~~Vented Lead Acid~~vented lead-acid (VLA) and ~~Nickel Cadmium (NiCd~~nickel-cadmium (NiCad) batteries the visible electrolyte level must be checked as one of the required maintenance activities that must be performed at an interval that is equal to or less than the maximum maintenance interval of Table 1-4. Because the electrolyte level in ~~Valve Regulated Lead-Acid~~valve-regulated lead-acid (VRLA) batteries cannot be observed, there is no maintenance activity listed in Table 1-4 of the ~~Standard~~standard for checking the electrolyte level. Low electrolyte level of any cell of a VLA or ~~NiCd~~NiCad station battery is a condition requiring correction. Typically, the electrolyte level should be returned to an acceptable level for both types of batteries (VLA and ~~NiCd~~NiCad) by adding distilled or other approved-quality water to the cell.

Often people confuse the interval for watering all cells required due to evaporation of the electrolyte in the station battery cells with the maximum maintenance interval required to check the electrolyte level. In many of the modern station batteries, the jar containing the electrolyte is so large with the band between the high and low electrolyte level so wide that normal evaporation which would require periodic watering of all cells takes several years to occur. However, because loss of electrolyte due to cracks in the jar, overcharging of the station battery, or other unforeseen events can cause rapid loss of electrolyte; the shorter maximum maintenance intervals for checking the electrolyte level are required. A low level of electrolyte in a VLA battery cell which exposes the tops of the plates can cause the exposed portion of the plates to accelerated sulfation resulting in loss of cell capacity. Also, in a VLA battery where the electrolyte level goes below the end of the cell withdrawal tube or filling funnel, gasses can exit the cell by the tube instead of the flame arrester and present an explosion hazard.

What are the parameters that can be evaluated in Tables 1-4(a) and 1-4(b)?

The most common parameter that is periodically trended and evaluated by industry today to verify that the station battery can perform as manufactured is internal ohmic cell/unit measurements.

In the mid 1990s, several large and small utilities began developing maintenance and testing programs for Protection System station batteries using a condition based maintenance approach of trending internal ohmic measurements to each station battery cell's baseline value. Battery owners use the data collected from this maintenance activity to determine (1) when a station battery requires a capacity test (instead of performing a capacity test on a predetermined, prescribed interval), (2) when an individual cell or battery unit should be replaced, or (3) based on the analysis of the trended data, if the station battery should be replaced without performing a capacity test.

Other examples of measurable parameters that can be periodically trended and evaluated for lead acid batteries are cell voltage, float current, connection resistance. However, periodically

trending and evaluating cell/unit Ohmic measurements are the most common battery/cell parameters that are evaluated by industry to verify a lead acid battery string can perform as manufactured.

Why does it appear that there are two maintenance activities in Table 1-4(b) (for VRLA batteries) that appear to be the same activity and have the same maximum maintenance interval?

There are two different and distinct reasons for doing almost the same maintenance activity at the same interval for ~~Valve-Regulated Lead-Acid~~valve-regulated lead-acid (VRLA) batteries. The first similar activity for VRLA batteries (Table 1-4(b)) that has the same maximum maintenance interval is to "measure battery cell/unit internal ohmic values." Part of the reason for this activity is because the visual inspection of the cell condition is unavailable for VRLA batteries. Besides the requirement to measure the internal ohmic measurements of VRLA batteries to determine the internal health of the cell, the maximum maintenance interval for this activity is significantly shorter than the interval for ~~Vented Lead-Acid~~vented lead-acid (VLA) due to some unique failure modes for VRLA batteries. Some of the potential problems that VRLA batteries are susceptible to that do not affect VLA batteries are thermal runaway, cell dry-out, and cell reversal when one cell has a very low capacity.

The other similar activity listed in Table 1-4(b) is ~~"~~"…verify that the station battery can perform as ~~designed~~manufactured by evaluating the measured cell/unit internal ohmic values to station battery baseline." This activity allows an owner the option to choose between this activity with its much shorter maximum maintenance interval or the longer maximum maintenance interval for the maintenance activity to "Verify that the station battery can perform as ~~designed~~manufactured by conducting a performance, service, or modified performance capacity test of the entire battery bank."

For VRLA batteries, there are two drivers for internal ohmic readings. The first driver is for a means to trend battery life. A comparison and trending against the baseline new battery ohmic reading can be used in lieu of capacity tests to determine remaining battery life. Remaining battery life is analogous to stating that the battery is still able to "perform as ~~designed".~~ manufactured." This is the intent of the "perform as ~~designed 6~~ manufactured six-month test" at Row 4 on Table 1-4b.

The second big driver is VRLA batteries tendency for thermal runaway. This is the intent of the "thermal runaway test" at Row 2 on Table 1-4b. In order to detect a cell in thermal runaway, you need not have a formal trending program to track when a cell has reached a 25~~%~~ percent increase over baseline. Rather, it will stick out like a sore thumb when compared to the other cells in a string at a given point in time, regardless of the age of all the cells in a string. In other words, if the battery is 10 years old and all the cells are gradually approaching a 25~~%~~ percent increase in ohmic values over baseline, then you have a battery which is approaching end of life. You need to get ready to buy a new battery, but you do not have to worry about an impending catastrophic failure. On the other hand, if the battery is five years old and you have one cell that has a markedly different ohmic reading than all the other cells, then you need to be worried that this cell is in thermal runaway and catastrophic failure is imminent.

If an entity elects to use a capacity test rather than a cell ohmic value trending program, this does not eliminate the need to be concerned about thermal runaway – the entity still needs to do the ~~6~~ six-month readings and look for cells which are outliers in the string but they need not

trend results against the factory/as new baseline. Some entities will not mind the extra administrative burden of having the ongoing trending program against baseline - others would rather just do the capacity test and not have to trend the data against baseline. Nonetheless, all entities must look for ohmic outliers on a ~~6~~ six-month basis.

It is possible to accomplish both tasks listed (trend testing for ~~capacity~~capability and testing for thermal runaway candidates) with the very same ohmic test. It becomes an analysis exercise of watching the trend from baselines and watching for the oblique cell measurement.

15.5 Associated communications equipment (Table 1-2)

The equipment used for tripping in a communications-assisted trip scheme is a vital piece of the trip circuit. Remote action causing a local trip can be thought of as another parallel trip path to the trip coil that must be tested. Besides the trip output and wiring to the trip coil(s~~)~~), there is also a communications medium that must be maintained. Newer technologies now exist that achieve communications-assisted tripping without the conventional wiring practices of older technology. For example~~:~~, older technologies may have included Frequency Shift Key methods. This technology requires that guard and trip levels be maintained. The actual tripping path(s) to the trip coil(s) may be tested as a parallel trip path within the dc control circuitry tests. Emerging technologies transfer digital information over a variety of carrier mediums that are then interpreted locally as trip signals. The requirements apply to the communicated signal needed for the proper operation of the protective relay trip logic or scheme. Therefore, this ~~Standard~~standard is applied to equipment used to convey both trip signals (permissive or direct) and block signals.

It was the intent of this ~~Standard~~standard to require that a test be performed on any communications-assisted trip scheme, regardless of the vintage of technology. The essential element is that the tripping (or blocking) occurs locally when the remote action has been asserted; or that the tripping (or blocking) occurs remotely when the local action is asserted. Note that the required testing can still be done within the concept of testing by overlapping segments. Associated communications equipment can be (but is not limited to) testing at other times and different frequencies as the protective relays, the individual trip paths and the affected circuit interrupting devices.

Some newer installations utilize digital signals over fiber-optics from the protective relays in the control house to the circuit interrupting device in the yard. This method of tripping the circuit breaker, even though it might be considered communications, must be maintained per the dc control circuitry maintenance requirements.

15.5.1 Frequently Asked Questions:

What are some examples of mechanisms to check communications equipment functioning?

For unmonitored Protection Systems, various types of communications ~~systems~~Systems will have different facilities for on-site integrity checking to be performed at least every four months during a substation visit. Some examples are, but not limited to:

- On-off power-line carrier ~~systems~~Systems can be checked by performing a manual carrier keying test between the line terminals, or carrier check-back test from one terminal.
- Systems which use frequency-shift communications with a continuous guard signal (over a telephone circuit, analog microwave system, etc.) can be checked by observing for a loss-of-guard indication or alarm. For frequency-shift power-line carrier ~~systems~~Systems, the guard signal level meter can also be checked.
- Hard-wired pilot wire line Protection Systems typically have pilot-wire monitoring relays that give an alarm indication for a pilot wire ground or open pilot wire circuit loop.
- Digital communications ~~systems~~Systems typically have a data reception indicator or data error indicator (based on loss of signal, bit error rate, or frame error checking).

For monitored Protection Systems, various types of communications ~~systems~~Systems will have different facilities for monitoring the presence of the communications channel, and activating alarms that can be monitored remotely. Some examples are, but not limited to:

- On-off power-line carrier ~~systems~~Systems can be shown to be operational by automated periodic power-line carrier check-back tests~~,~~ with remote alarming of failures.
- Systems which use a frequency-shift communications with a continuous guard signal (over a telephone circuit, analog microwave system, etc.) can be remotely monitored with a loss-of-guard alarm or low signal level alarm.
- Hard-wired pilot wire line Protection Systems can be monitored by remote alarming of pilot-wire monitoring relays.
- Digital communications ~~systems~~Systems can activate remotely monitored alarms for data reception loss or data error indications.
- Systems can be queried for the data error rates.

For the highest degree of monitoring of Protection Systems, the communications system must monitor all aspects of the performance and quality of the channel that show it meets the design performance criteria, including monitoring of the channel interface to protective relays.

- In many communications ~~systems~~Systems signal quality measurements, including signal-to-noise ratio, received signal level, reflected transmitter power or standing wave ratio, propagation delay, and data error rates are compared to alarm limits. These alarms are connected for remote monitoring.
- Alarms for inadequate performance are remotely monitored at all times, and the alarm communications system to the remote monitoring site must itself be continuously

monitored to assure that the actual alarm status at the communications equipment location is continuously being reflected at the remote monitoring site.

What is needed for the ~~4~~four-month inspection of communications-assisted trip scheme equipment?

The ~~4~~four-month inspection applies to unmonitored equipment. An example of compliance with this requirement might be, but is not limited to:

With each site visit, check that the equipment is free from alarms~~,~~; check any metered signal levels, and that power is still applied. While this might be explicit for a particular type of equipment (i.e~~.~~., FSK equipment), the concept should be that the entity verify that the communications equipment that is used in a Protection System is operable through a cursory inspection and site visit. This site visit can be eliminated on this particular example if the FSK equipment had a monitored alarm on Loss of Guard. Blocking carrier ~~systems~~Systems with auto checkbacks will present an alarm when the channel fails allowing a visual indication. With no auto checkback, the channel integrity will need to be verified by a manual checkback or a two ended signal check. This check could also be eliminated by bring the auto checkback failure alarm to the monitored central location.

Does a fiber optic I/O scheme used for breaker tripping or control within a station, for example - transmitting a trip signal or control logic between the control house and the breaker control cabinet, constitute a communications system?

This equipment is presently classified as being part of the Protection System Control Circuitry and tested per the portions of Table 1 applicable to Protection System Control Circuitry, rather than those portions of the table applicable to communications equipment.

In Table 1-2, the Maintenance Activities section of the Protective System Communications Equipment and Channels refers to the quality of the channel meeting "performance criteria~~".~~," What is meant by performance criteria?

Protection System communications channels must have a means of determining if the channel and communications equipment is operating normally. If the channel is not operating normally, an alarm will be indicated. For unmonitored systems, this alarm will probably be on the panel. For monitored systems, the alarm will be transmitted to a remote location.

Each entity will have established a nominal performance level for each protective system communications channel that is consistent with proper functioning of the Protection System. If that level of nominal performance is not being met, the system will go into alarm. Following are some examples of protective system communications channel performance measuring:

- For direct transfer trip using a frequency shift power line carrier channel, a guard level monitor is part of the equipment. A normal receive level is established when the system is calibrated and if the signal level drops below an established level, the system will indicate an alarm.
- An on-off blocking signal over power line carrier is used for directional comparison blocking schemes on transmission lines. During a ~~fault~~Fault, block logic is sent to the remote relays by turning on a local transmitter and sending the signal over the power line to a receiver at the remote end. This signal is normally off so continuous levels cannot be checked. These schemes use check-back testing to determine channel performance. A predetermined signal sequence is sent to the remote end and the remote end decodes this signal and sends a signal sequence back. If the sending end

receives the correct information from the remote terminal, the test passes and no alarm is indicated. Full power and reduced power tests are typically run. Power levels for these tests are determined at the time of calibration.

- Pilot wire relay systems use a hardwire communications circuit to communicate between the local and remote ends of the protective zone. This circuit is monitored by circulating a dc current between the relay ~~systems~~Systems. A typical level may be 1 mA. If the level drops below the setting of the alarm monitor, the system will indicate an alarm.

- Modern digital relay systems use data communications to transmit relay information to the remote end relays. An example of this is a line current differential scheme commonly used on transmission lines. The protective relays communicate current magnitude and phase information over the communications path to determine if the ~~fault~~Fault is located in the protective zone. Quantities such as digital packet loss, bit error rate and channel delay are monitored to determine the quality of the channel. These limits are determined and set during relay commissioning. Once set, any channel quality problems that fall outside the set levels will indicate an alarm.

The previous examples show how some protective relay communications channels can be monitored and how the channel performance can be compared to performance criteria established by the entity. This ~~Standard~~standard does not state what the performance criteria will be; it just requires that the entity establish nominal criteria so protective system channel monitoring can be performed.

How is the performance criteria of Protection System communications equipment involved in the maintenance program?

An entity determines the acceptable performance criteria, depending on the technology implemented. If the communications channel performance of a Protection System varies from the pre-determined performance criteria for that system, then these results should be investigated and resolved.

How do I verify the A/D converters of microprocessor-based relays?

There are a variety of ways to do this. Two examples would be: using values gathered via data communications and automatically comparing these values with values from other sources, or using groupings of other measurements (such as vector summation of bus feeder currents) for comparison. Many other methods are possible.

15.6 Alarms (Table 2)

In addition to the tables of maintenance for the ~~components~~Components of a Protection System, there is an additional table added for alarms. This additional table was added for clarity. This enabled the common alarm attributes to be consolidated into a single spot, and, thus, make it easier to read the Tables 1-1 through 1-5. The alarms need to arrive at a site wherein a corrective action can be initiated. This could be a control room, operations center, etc. The alarming mechanism can be a ~~Standard~~standard alarming system or an auto-polling system~~,~~; the only requirement is that the alarm be brought to the action-site within 24 hours. This effectively makes manned-stations equivalent to monitored stations. The alarm of a monitored point (for example a monitored trip path with a lamp) in a manned-station now makes that monitored point eligible for monitored status. Obviously, these same rules apply to

a non-manned-station, which is that if the monitored point has an alarm that is auto-reported to the operations center (for example) within 24 hours, then it too is considered monitored.

15.6.1 Frequently Asked Questions:

Why are there activities defined for varying degrees of monitoring a Protection System ~~component~~Component when that level of technology may not yet be available?

There may already be some equipment available that is capable of meeting the highest levels of monitoring criteria listed in the Tables. However, even if there is no equipment available today that can meet this level of monitoring the ~~Standard~~standard establishes the necessary requirements for when such equipment becomes available. By creating a roadmap for development, this provision makes the ~~Standard~~standard technology ~~-~~neutral. The Standard Drafting Team wants to avoid the need to revise the ~~Standard~~standard in a few years to accommodate technology advances that may be coming to the industry.

Does a fail-safe "form b" contact that is alarmed to a 24/7 operation center classify as an alarm path with monitoring?

If the fail-safe "form-b" contact that is alarmed to a 24/7 operation center causes the alarm to activate for failure of any portion of the alarming path from the alarm origin to the 24/7 operations center, then this can be classified as an alarm path with monitoring.

15.7 Distributed UFLS and Distributed UVLS Systems (Table 3)

Distributed UFLS and Distributed UVLS Systems have their maintenance activities documented in Table 3 due to their distributed nature allowing reduced maintenance activities and extended maximum maintenance intervals. Relays have the same maintenance activities and intervals as Table 1-1. Voltage and current-sensing devices have the same maintenance activity and interval as Table 1-~~2~~3. DC ~~systems~~Systems need only have their voltage read at the relay every ~~twelve~~12 years. Control circuits have the following maintenance activities every ~~twelve~~12 years:

- Verify the trip path between the relay and lock-out and/or auxiliary tripping device(s).
- Verify operation of any lock-out and/or auxiliary tripping device(s) used in the trip circuit.
- No verification of trip path required between the lock-out (and/or auxiliary tripping device) and the non-BES interrupting device.
- No verification of trip path required between the relay and trip coil for circuits that have no lock-out and/or auxiliary tripping device(s).
- No verification of trip coil required.

No maintenance activity is required for associated communication ~~systems~~Systems for distributed UFLS and distributed UVLS schemes.

Non-BES interrupting devices that participate in a distributed UFLS or distributed UVLS scheme are excluded from the tripping requirement, and part of the control circuit test requirement; however, the part of the trip path control circuitry between the ~~load shed~~Load-Shed relay and lock-out or auxiliary tripping relay must be tested at least once every 12 years. In the case where there is no lock-out or auxiliary tripping relay used in a distributed UFLS or UVLS scheme which is not part of the BES, there is no control circuit test requirement. There are many circuit

interrupting devices in the distribution system that will be operating for any given under-frequency event that requires tripping for that event. A failure in the tripping -action of a single distributed system circuit breaker (or non-BES equipment interruption device) will be far less significant than, for example, any single Transmission Protection System failure, such as a failure of a bus differential lock-out relay. While many failures of these distributed system circuit breakers (or non-BES equipment interruption device) could add up to be significant, it is also believed that many circuit breakers are operated often on just faultFault clearing duty; and, therefore, these circuit breakers are operated at least as frequently as any requirements that appear in this Standardstandard.

There are times when a Protection System componentComponent will be used on a BES device, as well as a non-BES device, such as a battery bank that serves both a BES circuit breaker and a non-BES interrupting device used for UFLS. In such a case, the battery bank (or other Protection System componentComponent) will be subject to the Tables of the Standardstandard because it is used for the BES.

15.7.1 Frequently Asked Questions:

The standard reaches further into the distribution system than we would like for UFLS and UVLS ...

While UFLS and UVLS equipment are located on the distribution network, their job is to protect the Bulk Electric System. This is not beyond the scope of NERC's 215 authority.

FPA section 215(a) definitions section defines "bulk -power system as (: "(A) facilities and control systemsSystems necessary for operating an interconnected electric energy transmission network (or any portion thereof)." That definition, then, is limited by a later statement which adds the term bulk -power system ""...does not include facilities used in the local distribution of electric energy." Also, sectionSection 215 also covers users, owners, and operators of bulk -power facilitiesFacilities.

UFLS and UVLS (when the UVLS is installed to prevent system voltage collapse or voltage instability for BES reliability) are not "used in the local distribution of electric energy", " despite their location on local distribution networks. Further, if UFLS/UVLS facilities were not covered by the Reliability Standardsreliability standards, then in order to protect the integrity of the BES during under-frequency or under-voltage events, that loadLoad would have to be shed at the transmissionTransmission bus to ensure the loadLoad-generation balance and voltage stability is maintained on the BES.

15.8 Examples of Evidence of Compliance

To comply with the requirements of this Standardstandard, an entity will have to document and save evidence. The evidence can be of many different forms. The Standard Drafting Team recognizes that there are concurrent evidence requirements of other NERC Standardsstandards that could, at times, fulfill evidence requirements of this Standard.

15.8.1 Frequently Asked Questions:

What forms of evidence are acceptable?

Acceptable forms of evidence, as relevant for the Requirementrequirement being documented, include, but are not limited to:

- Process documents or plans
- Data (such as relay settings sheets, photos, SCADA, and test records)
- Database lists, records and/or screen shots that demonstrate compliance information
- Prints, diagrams and/or schematics
- Maintenance records
- Logs (operator, substation, and other types of log)
- Inspection forms
- Mail, memos, or email proving the required information was exchanged, coordinated, submitted or received
- Check-off forms (paper or electronic)
- Any record that demonstrates that the maintenance activity was known, accounted for, and/or performed.

If I replace a failed Protection System ~~component~~Component with another ~~component~~Component, what testing do I need to perform on the new ~~component~~Component?

In order to reset the Table 1 maintenance interval for the replacement ~~component~~Component, all relevant Table 1 activities for the ~~component~~Component should be performed.

I have evidence to show compliance for PRC-016 ("Special Protection System Misoperation"). Can I also use it to show compliance for this Standard, PRC-005-2?

Maintaining evidence for operation of Special Protection Systems could concurrently be utilized as proof of the operation of the associated trip coil (provided one can be certain of the trip coil involved). Thus, the reporting requirements that one may have to do for the Misoperation of a Special Protection Scheme under PRC-016 could work for the activity tracking requirements under this PRC-005-2.

I maintain ~~disturbance~~Disturbance records which show Protection System operations. Can I use these records to show compliance?

These records can be concurrently utilized as dc trip path verifications, to the degree that they demonstrate the proper function of that dc trip path.

I maintain test reports on some of my ~~components of my~~ Protection System ~~components~~Components. Can I use these test reports to show that I have verified a maintenance activity?

Yes.

References

1. Protection System Maintenance: A Technical Reference. Prepared by the System Protection and Controls Task Force of the NERC Planning Committee. Dated September 13, 2007.

2. "Predicating The Optimum Routine test Interval For Protection Relays," by J. J. Kumm, M.S. Weber, D. Hou, and E. O. Schweitzer, III, IEEE Transactions on Power Delivery, Vol. 10, No. 2, April 1995.

3. "Transmission Relay System Performance Comparison For 2000, 2001, 2002, 2003, 2004 and 2005," Working Group I17 of Power System Relaying Committee of IEEE Power Engineering Society, May 2006.

4. "A Survey of Relaying Test Practices," Special Report by WG I11 of Power System Relaying Committee of IEEE Power Engineering Society, September 16, 1999.

5. "Transmission Protective Relay System Performance Measuring Methodology," Working Group I3 of Power System Relaying Committee of IEEE Power Engineering Society, January 2002.

6. "Processes, Issues, Trends and Quality Control of Relay Settings," Working Group C3 of Power System Relaying Committee of IEEE Power Engineering Society, December 2006.

7. "Proposed Statistical Performance Measures for Microprocessor-Based Transmission-Line Protective Relays, Part I - Explanation of the Statistics, and Part II - Collection and Uses of Data," Working Group D5 of Power System Relaying Committee of IEEE Power Engineering Society, May 1995; Papers 96WM 016-6 PWRD and 96WM 127-1 PWRD, 1996 IEEE Power Engineering Society Winter Meeting.

8. "Analysis And Guidelines For Testing Numerical Protection Schemes," Final Report of CIGRE WG 34.10, August 2000.

9. "Use of Preventative Maintenance and System Performance Data to Optimize Scheduled Maintenance Intervals," H. Anderson, R. Loughlin, and J. Zipp, Georgia Tech Protective Relay Conference, May 1996.

10. "Battery Performance Monitoring by Internal Ohmic Measurements" EPRI Application Guidelines for Stationary Batteries TR- 108826 Final Report, December 1997.

11. "IEEE Recommended Practice for Maintenance, Testing, and Replacement of Valve-Regulated Lead-Acid (VRLA) Batteries for Stationary Applications," IEEE Power Engineering Society Std 1188 – 2005.

12. "IEEE Recommended Practice for Maintenance, Testing, and Replacement of Vented Lead-Acid Batteries for Stationary Applications," IEEE Power & Engineering Society Std 45-2010.

13. "IEEE Recommended Practice for Installation design and Installation of Vented Lead-Acid Batteries for Stationary Applications," IEEE Std 484 – 2002.

14. "Stationary Battery Monitoring by Internal Ohmic Measurements," EPRI Technical Report, 1002925 Final Report, December 2002.

15. "Stationary Battery Guide: Design Application, and Maintenance" EPRI Revision 2 of TR-100248, 1006757, August 2002.

PSMT SDT References

~~10~~16. "Essentials of Statistics for Business and Economics" Anderson, Sweeney, Williams, 2003

~~11~~17. "Introduction to Statistics and Data Analysis" - Second Edition, Peck, Olson, Devore, 2005

~~12~~18. "Statistical Analysis for Business Decisions" Peters, Summers, 1968

Figure 1: Typical Transmission System

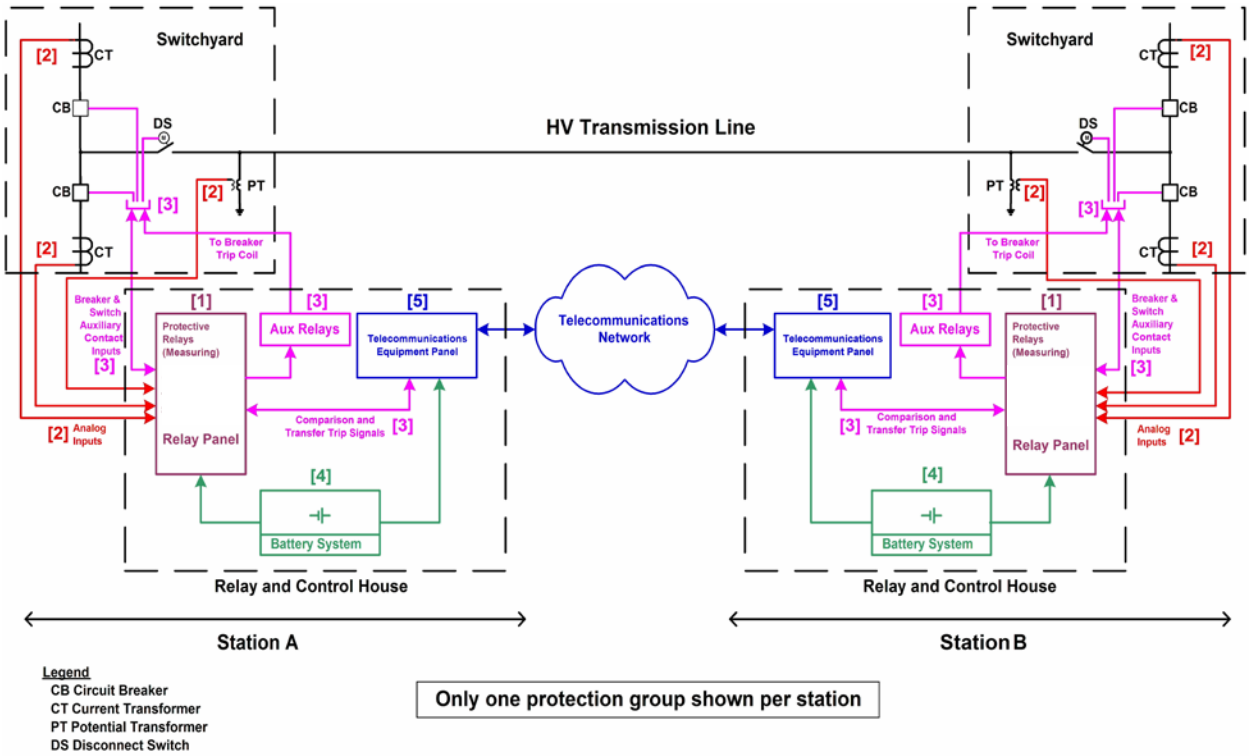

For information on ~~components~~Components, see ***Figure 1 & 2 Legend – Components of Protection Systems***

Figure 2: Typical Generation System

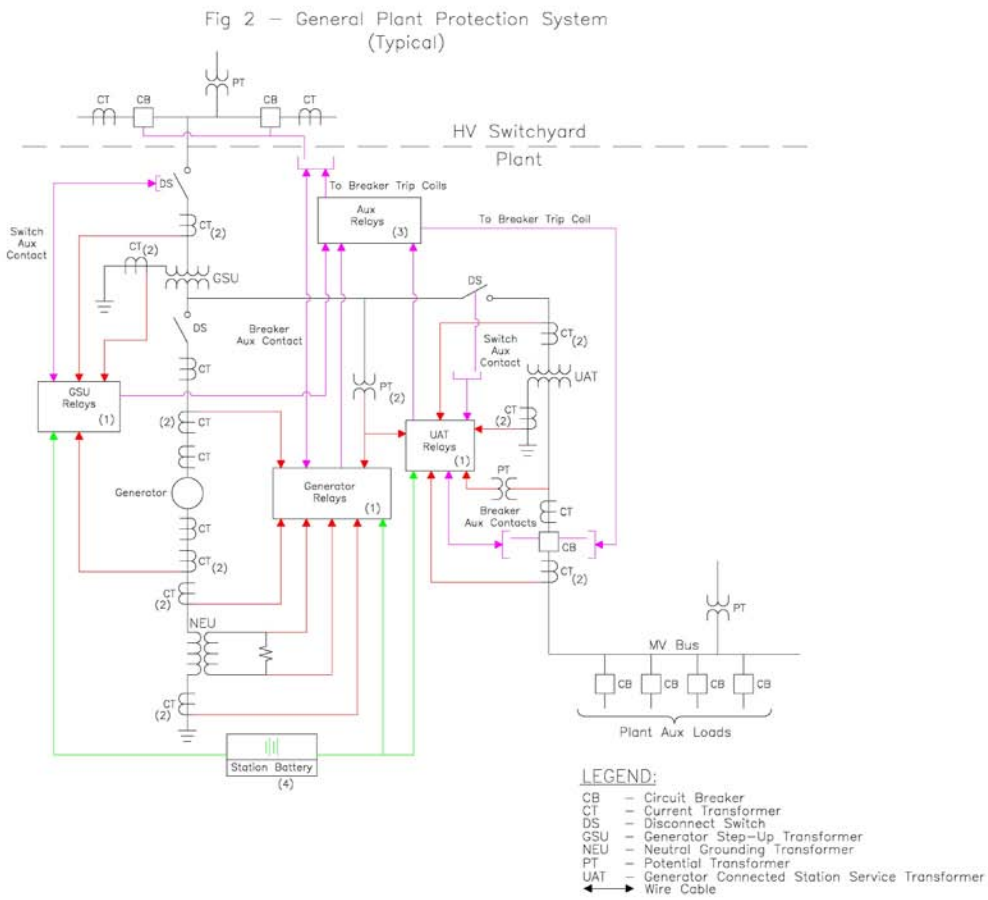

For information on ~~components~~Components, see ***Figure 1 & 2 Legend – Components of Protection Systems***

Figure 1 & 2 Legend – Components of Protection Systems

Number in Figure	Component of Protection System	Includes	Excludes
1	Protective relays which respond to electrical quantities	All protective relays that use current and/or voltage inputs from current & voltage sensors and that trip the 86, 94 or trip coil.	Devices that use non-electrical methods of operation including thermal, pressure, gas accumulation, and vibration. Any ancillary equipment not specified in the definition of Protection Systems. Control and/or monitoring equipment that is not a part of the automatic tripping action of the Protection System
2	Voltage and current sensing devices providing inputs to protective relays	The signals from the voltage & current sensing devices to the protective relay input.	Voltage & current sensing devices that are not a part of the Protection System, including sync-check ~~systems~~Systems, metering ~~systems~~Systems and data acquisition ~~systems~~Systems.
3	Control circuitry associated with protective functions	All control wiring (or other medium for conveying trip signals) associated with the tripping action of 86 devices, 94 devices or trip coils (from all parallel trip paths). This would include fiber-optic ~~systems~~Systems that carry a trip signal as well as hard-wired ~~systems~~Systems that carry trip current.	Closing circuits, SCADA circuits, other devices in control scheme not passing trip current
4	Station dc supply	Batteries and battery chargers and any control power system which has the function of supplying power to the protective relays, associated trip circuits and trip coils.	Any power supplies that are not used to power protective relays or their associated trip circuits and trip coils.
5	Communications ~~systems~~Systems necessary for correct operation of protective functions	Tele-protection equipment used to convey specific information, in the form of analog or digital signals, necessary for the correct operation of protective functions.	Any communications equipment that is not used to convey information necessary for the correct operation of protective functions.

Additional information can be found in References

Appendix A

The following illustrates the concept of overlapping verifications and tests as summarized in Section 10 of the paper. As an example, Figure A-1 shows protection for a critical transmission line by carrier blocking directional comparison pilot relaying. The goal is to verify the ability of the entire two-terminal pilot protection scheme to protect for line ~~faults~~Faults, and to avoid over-tripping for ~~faults~~Faults external to the transmission line zone of protection bounded by the current transformer locations.

Figure A-1

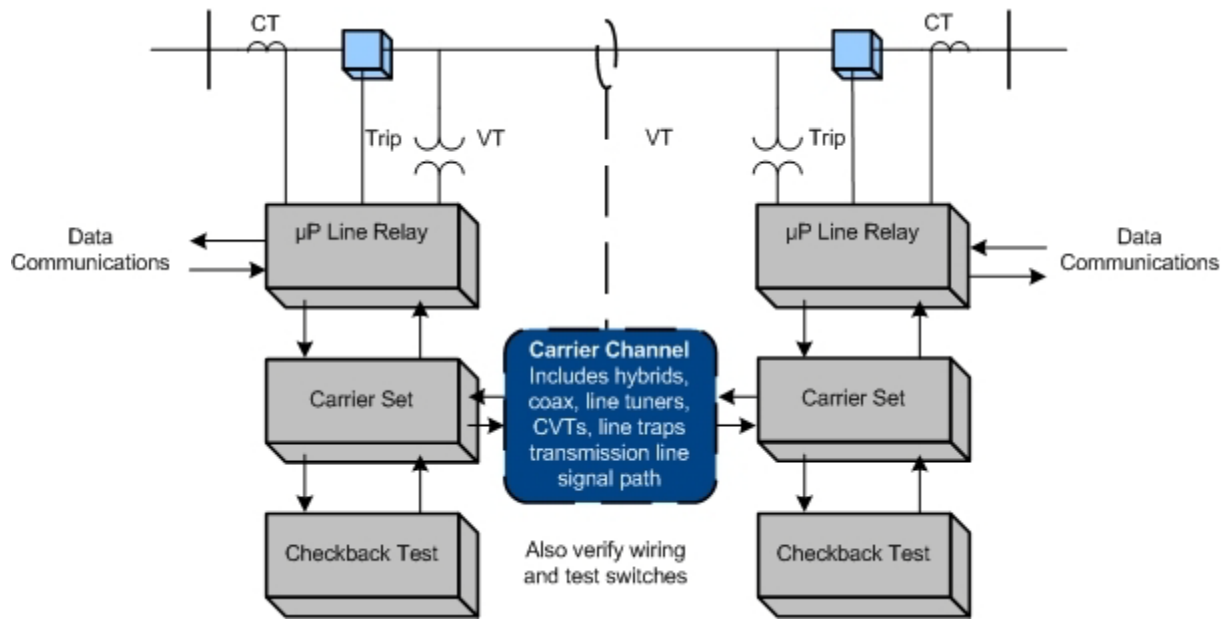

In this example (Figure A1), verification takes advantage of the self-monitoring features of microprocessor multifunction line relays at each end of the line. For each of the line relays themselves, the example assumes that the user has the following arrangements in place:

1. The relay has a data communications port that can be accessed from remote locations.
2. The relay has internal self-monitoring programs and functions that report failures of internal electronics, via communications messages or alarm contacts to SCADA.
3. The relays report loss of dc power, and the relays themselves or external monitors report the state of the dc battery supply.
4. The CT and PT inputs to the relays are used for continuous calculation of metered values of volts, amperes, plus Watts and VARs on the line. These metered values are reported by data communications. For maintenance, the user elects to compare these readings to those of other relays, meters, or DFRs. The other readings may be from redundant relaying or measurement ~~systems~~Systems or they may be derived from values in other protection zones. Comparison with other such readings to within required relaying accuracy verifies Voltage & Current Sensing Devices, wiring, and analog signal input processing of the relays.

One effective way to do this is to utilize the relay metered values directly in SCADA, where they can be compared with other references or state estimator values.

5. Breaker status indication from auxiliary contacts is verified in the same way as in (2). Status indications must be consistent with the flow or absence of current.
6. Continuity of the breaker trip circuit from dc bus through the trip coil is monitored by the relay and reported via communications.
7. Correct operation of the on-off carrier channel is also critical to security of the Protection System, so each carrier set has a connected or integrated automatic checkback test unit. The automatic checkback test runs several times a day. Newer carrier sets with integrated checkback testing check for received signal level and report abnormal channel attenuation or noise, even if the problem is not severe enough to completely disable the channel.

These monitoring activities plus the check-back test comprise automatic verification of all the Protection System ~~elements~~Elements that experience tells us are the most prone to fail. But, does this comprise a complete verification?

Figure A-2

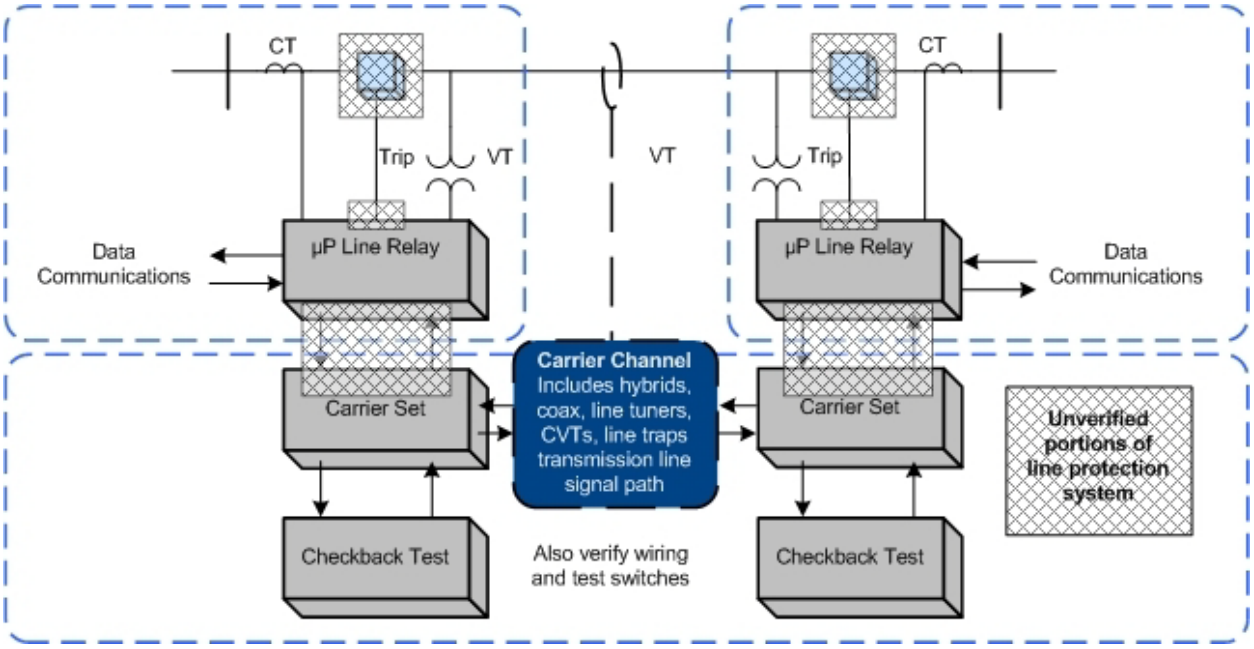

The dotted boxes of Figure A-2 show the sections of verification defined by the monitoring and verification practices just listed. These sections are not completely overlapping, and the shaded regions show ~~elements~~Elements that are not verified:

1. The continuity of trip coils is verified, but no means is provided for validating the ability of the circuit breaker to trip if the trip coil should be energized.

2. Within each line relay, all the microprocessors that participate in the trip decision have been verified by internal monitoring. However, the trip circuit is actually energized by the contacts of a small telephone-type "ice cube" relay within the line protective relay. The microprocessor energizes the coil of this ice cube relay through its output data port and a transistor driver circuit. There is no monitoring of the output port, driver circuit, ice cube relay, or contacts of that relay. These ~~components~~Components are critical for tripping the circuit breaker for a ~~fault~~Fault.
3. The check-back test of the carrier channel does not verify the connections between the relaying microprocessor internal decision programs and the carrier transmitter keying circuit or the carrier receiver output state. These connections include microprocessor I/O ports, electronic driver circuits, wiring, and sometimes telephone-type auxiliary relays.
4. The correct states of breaker and disconnect switch auxiliary contacts are monitored, but this does not confirm that the state change indication is correct when the breaker or switch opens.

A practical solution for (1) and (2) is to observe actual breaker tripping, with a specified maximum time interval between trip tests. Clearing of naturally-occurring ~~faults~~Faults are demonstrations of operation that reset the time interval clock for testing of each breaker tripped in this way. If ~~faults~~Faults do not occur, manual tripping of the breaker through the relay trip output via data communications to the relay microprocessor meets the requirement for periodic testing.

PRC-005 does not address breaker maintenance, and its Protection System test requirements can be met by energizing the trip circuit in a test mode (breaker disconnected) through the relay microprocessor. This can be done via a front-panel button command to the relay logic, or application of a simulated ~~fault~~Fault with a relay test set. However, utilities have found that breakers often show problems during Protection System tests. It is recommended that Protection System verification include periodic testing of the actual tripping of connected circuit breakers.

Testing of the relay-carrier set interface in (3) requires that each relay key its transmitter, and that the other relay demonstrate reception of that blocking carrier. This can be observed from relay or DFR records during naturally occurring ~~faults~~Faults, or by a manual test. If the checkback test sequence were incorporated in the relay logic, the carrier sets and carrier channel are then included in the overlapping segments monitored by the two relays, and the monitoring gap is completely eliminated.

Appendix B — Protection System Maintenance Standard Drafting Team

Charles W. Rogers
Chairman
Consumers Energy Co.

John B. Anderson
Xcel Energy

Merle Ashton
Tri-State G&T

Bob Bentert
Florida Power & Light Company

Forrest Brock
Western Farmers Electric Cooperative

Aaron Feathers
Pacific Gas and Electric Company

Sam Francis
Oncor Electric Delivery

Carol Gerou
Midwest Reliability Organization

Russell C. Hardison
Tennessee Valley Authority

David Harper
NRG Texas Maintenance Services

James M. Kinney
FirstEnergy Corporation

Mark Lucas
ComEd

Kristina Marriott
ENOSERV

Al McMeekin
NERC

Michael Palusso
Southern California Edison

Mark Peterson
Great River Energy

John Schecter
American Electric Power

William D. Shultz
Southern Company Generation

Eric A. Udren
Quanta Technology

Scott Vaughan
City of Roseville Electric Department

Matthew Westrich
American Transmission Company

Philip B. Winston
Southern Company Transmission

David Youngblood
Luminant Power

John A. Zipp
ITC Holdings

Technical Justification

PRC-005-2 Protection System Maintenance

The purpose of the proposed PRC-005-2 Reliability Standard is to document and implement programs for the maintenance of all Protection Systems affecting the reliability of the Bulk Electric System (BES) so that these Protection Systems are kept in working order. The proposed Reliability Standard further combines the legacy Reliability Standards PRC-005-1b, PRC-008-0, PRC-011-0, and PRC-017-0, as these legacy Reliability Standards have similar reliability goals and requirements. This purpose is consistent with NERC's goal to create and implement reliability standards that enable or support at least one of the eight, defined Reliability Principles. The requirements of the proposed PRC-005-1 Reliability Standard directly support the following Reliability Principles:

> Reliability Principle 1 – Interconnected bulk power systems shall be planned and operated in a coordinated manner to perform reliably under normal and abnormal conditions as defined in the NERC Standards.
>
> Reliability Principle 7 – The reliability of the interconnected bulk power systems shall be assessed, monitored, and maintained on a wide-area basis.

The existing PRC-005-1b, PRC-008-0, PRC-011-0, and PRC-017-0 Reliability Standards, as assessed by the NERC System Protection and Control Task Force (SPCTF) in its report of March 8, 2007, contain several fundamental flaws within the requirements. Within this assessment, the SPCTF asserts, for all four standards, that:

> *"The listed requirements do not provide clear and sufficient guidance concerning the maintenance and testing of the Protection Systems to achieve the commonly stated purpose which is "To ensure all transmission and generation Protection Systems affecting the reliability of the Bulk Electric System (BES) are maintained and tested.""*

And further recommends that:

- *"The standards should clearly state which power system elements are being addressed."*
- *"The requirements should reflect the inherent differences between different technologies of protection systems."*
- *"The terms maintenance programs and testing programs should be clearly defined in the glossary. The terms "maintenance" and "testing" are not interchangeable, and the requirements must be clear in their application. Additional terms may also have to be added to the glossary for clarity."*
- *"The requirements of the existing standards, as stated, support time-based maintenance and testing, and should be expanded to include condition-based and performance-based maintenance and testing. The R1.2 summary of maintenance and testing procedures needs to*

have some minimum defined sub-requirements to insure that the stated intent of the standards is met to support review by the compliance monitor," and

- *The SPCTF recommends that standards PRC-005-1b, PRC-008-0, PRC-011-0, and PRC-017-0 … be included in a new Standard Authorization Request for a single Protection System maintenance and testing standard.*

Relative to PRC-005-1, the Federal Energy Regulatory Commission (FERC), in Order 693 further directed in paragraph 1476:

"… the Commission directs the ERO to develop a modification to PRC–005–1 through the Reliability Standards development process that includes a requirement that maintenance and testing of a protection system must be carried out within a maximum allowable interval that is appropriate to the type of the protection system and its impact on the reliability of the Bulk-Power System. We further direct the ERO to consider FirstEnergy's and ISO–NE's suggestion to combine PRC–005–1, PRC–008–0, PRC–011–0, and PRC–017–0 into a single Reliability Standard through the Reliability Standards development process."

FERC offered, in paragraphs 1492, 1517, and 1547, similar directives regarding PRC-008-0, PRC-011-0, and PRC-017-0, respectively.

With the development of the proposed PRC-005-2 Reliability Standard, the Standard Drafting Team (SDT) for Project 2007-17 – Protection System Maintenance, has followed the observations and recommendation of the NERC SPCTF assessment of PRC-005-1, PRC-008-0, PRC-011-0, and PRC-017-0. The SDT also addressed FERC's directives from Order 693. The SDT accomplishes this by:

1. Merging the reliability objectives of the four legacy standards.
2. Establishing minimum acceptable maintenance activities and accompanying maximum allowable maintenance intervals, reflecting various technologies of the Components being addressed.
3. Providing entities the flexibility to implement condition-based maintenance by adjusting the minimum acceptable maintenance activities and maximum allowable maintenance intervals to reflect condition monitoring of the various Protection System Components, and
4. Providing requirements for effective implementation of a performance-based maintenance program.

The proposed PRC-005-2 Reliability Standard includes five requirements that:

1. Combine the reliability goals of developing detailed tables of minimum maintenance activities and maximum maintenance intervals for all five Component Types addressed within the NERC definition of Protection System. These tables include adjustments to those activities and intervals to reflect the benefits of any condition monitoring that may be present.

2. Require, within Requirement R1, that entities using a time-based maintenance program (which includes condition-based maintenance) shall establish a Protection System Maintenance Program (PSMP) that conforms to the tables described above.
3. Establish, within Requirement R2, the opportunity and requirements for establishment of a performance-based maintenance program for those entities that have (or wish to develop) sufficient performance observations for their Protection System Components such that they may determine maintenance intervals other than those specified within the tables while maintaining the level of reliability prescribed within the Standard.
4. Require, within Requirements R3 and R4, that entities fully implement their PSMP as determined pursuant to Requirement R1 for time-based maintenance programs and Requirement R2 for performance-based maintenance programs, respectively.
5. Further require, within Requirement R5, that entities demonstrate efforts to correct any deficiency identified during a maintenance interval that causes the Component to not meet the intended performance and requires follow-up corrective action in order to return it to good working order. The SDT elected to not require that entities complete the resolution of these issues, as the time required to effectively resolve the problems may vary widely depending on the scope of that resolution.

The proposed PRC-005-2 Reliability Standard provides a comprehensive set of requirements and associated information (within the tables) that define a strong PSMP. Entities that monitor the actual condition of their Protection System Components are further empowered to utilize the monitoring to improve the efficiency and effectiveness of their PSMP, and those entities that have extensive performance data regarding their Protection System Components can utilize that performance data to further improve the efficiency and effectiveness of their PSMP.

Requirement R1:

R1. Each Transmission Owner, Generator Owner, and Distribution Provider shall establish a Protection System Maintenance Program (PSMP) for its Protection Systems identified in Section 4.2. *[Violation Risk Factor: Medium] [Time Horizon: Operations Planning]*

The PSMP shall:

1.1. *Identify which maintenance method (time-based, performance-based (per PRC-005 Attachment A), or a combination) is used to address each Protection System component type. All batteries associated with the station dc supply component type of a Protection System shall be included in a time-based program as described in Table 1-4 and Table 3.*

1.2. *Include the applicable monitoring attributes applied to each Protection System component type consistent with the maintenance intervals specified in Tables 1-1 through 1-5, Table 2, and Table 3 where monitoring is used to extend the maintenance intervals beyond those specified for unmonitored Protection System components.*

Background and Rationale

Establishment of a Protection System Maintenance Program as directed by Requirement R1 is needed to detect and correct plausible age- and service-related degradation of Protection System components. To ensure reliability of the Bulk Electric System, it is important that a Protection System continue to function as designed over its service life.

Requirement R1 establishes that entities develop a comprehensive maintenance program for Protection System components addressing the elements specified in the Protection System Maintenance Program definition:

Protection System Maintenance Program (PSMP) — An ongoing program by which Protection System components are kept in working order and proper operation of malfunctioning components is restored. A maintenance program for a specific component includes one or more of the following activities:

- Verify — Determine that the component is functioning correctly.
- Monitor — Observe the routine in-service operation of the component.
- Test — Apply signals to a component to observe functional performance or output behavior, or to diagnose problems.
- Inspect — Examine for signs of component failure, reduced performance and degradation.
- Calibrate — Adjust the operating threshold or measurement accuracy of a measuring element to meet the intended performance requirement.

Maintenance and testing programs often incorporate the following types of maintenance practices:

- TBM – time-based maintenance – externally prescribed maximum maintenance or testing intervals are applied for components or groups of components. The intervals may have been developed from prior experience or manufacturers' recommendations. The TBM verification interval is based on a variety of factors, including experience of the particular asset owner, collective experiences of several asset owners who are members of a country or regional council, etc. The maintenance intervals are fixed, and may range in number of months or in years.

  TBM can include review of recent power system events near the particular terminal. Operating records may verify that some portion of the Protection System has operated correctly since the last test occurred. If specific protection scheme components have demonstrated correct performance within specifications, the maintenance test time clock can be reset for those components.

- PBM – Performance-Based Maintenance - intervals are established based on analytical or historical results of TBM failure rates on a statistically significant population of similar components. Some level of TBM is generally followed. Statistical analyses accompanied by adjustments to maintenance intervals are used to justify continued use of PBM-developed extended intervals when test failures or in-service failures occur infrequently.

- CBM – condition-based maintenance – continuously or frequently reported results from non-disruptive self monitoring of components demonstrate operational status as those components remain in service. Whatever is verified by CBM does not require manual testing, but taking advantage of this requires precise technical focus on exactly what parts are included as part of the self diagnostics. While the term "Condition-Based-Maintenance" (CBM) is no longer used within the Standard itself, it is important to note that the concepts of CBM are a part of the Standard (in the form of extended time intervals through status-monitoring). These extended time intervals are only allowed (in the absence of PBM) if the condition of the device is monitored (CBM). As a consequence of the "monitored-basis-time-intervals" existing within the Standard the explanatory discussions within this Supplementary Reference concerned with CBM will remain in this reference and are discussed as CBM.

  A key feature of condition-based monitoring is that it effectively reduces the time delay between the moment of a protection failure and time the protection system owner knows about it, for the monitored segments of the protection system. In some cases, the verification is practically continuous - the time interval between verifications is minutes or seconds. Thus, technically sound, condition-based verification, meets the directives of FERC Order 693 even more effectively than the strictly time-based tests of the same system components.

  Microprocessor based Protection System components that perform continuous self-monitoring verify correct operation of most components within the device. Self-monitoring capabilities may include battery continuity, float voltages, unintentional grounds, the ac signal inputs to a relay, analog measuring circuits, processors and memory for measurement, protection, and

data communications, trip circuit monitoring, and protection or data communications signals (and many, many more measurements). For those conditions, failure of a self-monitoring routine generates an alarm and may inhibit operation to avoid false trips. When internal components, such as critical output relay contacts, are not equipped with self-monitoring, they can be manually tested. The method of testing may be local or remote, or through inherent performance of the scheme during a system event.

TBM, PBM, and CBM can be combined for individual components, or within a complete Protection System. The following diagram illustrates the relationship between various types of maintenance practices described in this section. In the Venn diagram the overlapping regions show the relationship of TBM with PBM historical information and the inherent continuous monitoring offered through CBM.

This figure shows:

- Region 1: The TBM intervals that are increased based on known reported operational condition of individual components that are monitoring themselves.
- Region 2: The TBM intervals that are adjusted up or down based on results of analysis of maintenance history of statistically significant population of similar products that have been subject to TBM.
- Region 3: Optimal TBM intervals based on regions 1 and 2.

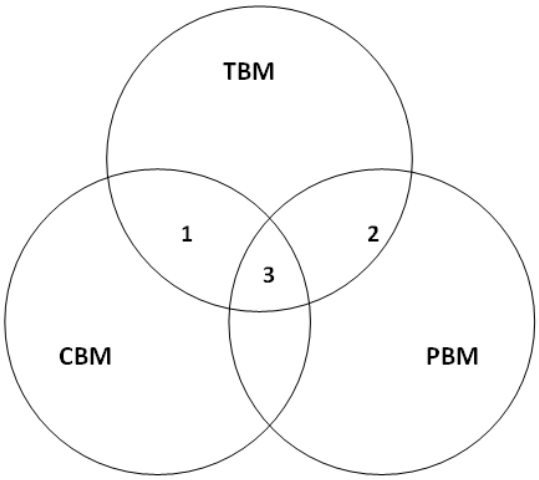

Relationship of time-based maintenance types

The PSMP shall:

R1, Part 1.1 Identify which maintenance method (time-based, performance-based per PRC-005 Attachment A, or a combination) is used to address each Protection System component type.

R1, Part 1.1 gives entities the flexibility to choose between the various methods listed above to maintain their Protection System equipment.

All batteries associated with the station dc supply Component Type of a Protection System shall be included in a time-based program as described in Table 1-4 and Table 3.

Batteries are the only element of a Protection System that is a perishable item with a shelf life. As a perishable item batteries require not only a constant float charge to maintain their freshness (charge), but periodic inspection to determine if there are problems associated with their aging process and testing to see if they are maintaining a charge or can still deliver their rated output as required.

Besides being perishable, a second unique feature of a battery that is unlike any other Protection System element is that a battery uses chemicals, metal alloys, plastics, welds, and bonds that must interact with each other to produce the constant dc source required for Protection Systems, undisturbed by ac system disturbances.

No type of battery manufactured today for Protection System application is free from problems that can only be detected over time by inspection and test. These problems can arise from variances in the manufacturing process, chemicals and alloys used in the construction of the individual cells, quality of welds and bonds to connect the components, the plastics used to make batteries and the cell forming process for the individual battery cells.

Other problems that require periodic inspection and testing can result from transportation from the factory to the job site, length of time before a charge is put on the battery, the method of installation, the voltage level and duration of equalize charges, the float voltage level used, and the environment that the battery is installed in.

All of the above mentioned factors and several more not discussed here are beyond the control of the Functional Entities that want to use a performance-based Protection System Maintenance (PBM) program. These inherent variances in the aging process of a battery cell make establishment of a designated segment based on manufacturer and type of battery impossible.

R1, Part 1.2 Include the applicable monitored Component attributes applied to each Protection System Component Type consistent with the maintenance intervals specified in Tables 1-1 through 1-5, Table 2, and Table 3 where monitoring is used to extend the maintenance intervals beyond those specified for unmonitored Protection System Components.

It is necessary for entities to specify the monitoring attributes utilized in their PSMP to demonstrate the existence of the monitoring elements which permit using the extended maintenance intervals established in Tables 1-1 through 1-5, Table 2, and Table 3 of the standard.

All maintenance is fundamentally time-based. Default time-based intervals are commonly established to assure proper functioning of each component of the Protection System, when data on the reliability of the components is not available other than observations from time-based maintenance. Excessive maintenance can actually decrease the reliability of the component or system. It is not unusual to cause failure of a component by removing it from service and restoring it. The improper application of test signals may cause failure of a component. Making use of the extended intervals by employing component monitoring minimizes human performance errors. The following factors may influence the established default intervals:

- If continuous indication of the functional condition of a component is available (from relays or chargers or any self monitoring device), then the intervals may be extended or manual testing may be eliminated. This is referred to as condition-based maintenance or CBM. CBM is valid only for precisely the components subject to monitoring. In the case of microprocessor-based relays, self-monitoring may not include automated diagnostics of every component within a microprocessor.
- Previous maintenance history for a group of components of a common type may indicate that the maintenance intervals can be extended while still achieving the desired level of performance. This is referred to as Performance-Based Maintenance or PBM. It is also sometimes referred to as reliability-centered maintenance or RCM, but PBM is used in this document.
- Observed proper operation of a component may be regarded as a maintenance verification of the respective component or element in a microprocessor-based device. For such an observation, the maintenance interval may be reset only to the degree that can be verified by data available on the operation. For example, the trip of an electromechanical relay for a fault verifies the trip contact and trip path, but only through the relays in series that actually operated; one operation of this relay cannot verify correct calibration.

Requirement R2:

Overview

Requirement 2, stated below, deals with Performance Based Maintenance. The requirement refers to Attachment A. Rather than simply list Attachment A, the requirements of Attachment A are listed below with a technical justification discussion for each. The criteria within Attachment A are largely based on application of statistical analysis theory.

Requirement R2

R2. Each Transmission Owner, Generator Owner, and Distribution Provider that uses performance-based maintenance intervals in its PSMP shall follow the procedure established in PRC-005 Attachment A to establish and maintain its performance-based intervals. *[Violation Risk Factor: Medium] [Time Horizon: Operations Planning]*

Background and Rationale

Performance Based Maintenance (PBM) is included in PRC-005-2 to allow utilities to adjust maintenance intervals based on their individual experience with equipment types and manufacture. The utility must create a segment of components with similar manufacture and model characteristics of statistically significant size.

> **Segment** – *Protection Systems or components of a consistent design standard, or a particular model or type from a single manufacturer that typically share other common elements. Consistent performance is expected across the entire population of a segment. A segment must contain at least sixty (60) individual components.*

Based on equipment failure(s) and out-of-tolerance(s), called Countable Events, in any given year, the utility then sets its maintenance interval to keep the Countable Events below 4%. Performance Based Maintenance is discussed at length in Section 9.1 of the Supplemental Reference for PRC-005-2. Many of the technical justifications shown below come from of the Supplemental Reference. Each requirement of Attachment A will now be listed and individually discussed.

> **Countable Event** – *A failure of a component requiring repair or replacement, any condition discovered during the maintenance activities in Tables 1-1 through 1-5 and Table 3 which requires corrective action, or a Misoperation attributed to hardware failure or calibration failure. Misoperations due to product design errors, software errors, relay settings different from specified settings, Protection System component configuration errors, or Protection System application errors are not included in Countable Events.*

1. Develop a list with a description of Components included in each designated Segment of the Protection System Component population, with a minimum **segment** population of 60 Components.

   A sample size requirement can be estimated using the bound on the Error of Distribution Formula when the expected result is of a “Pass/Fail” format and will be between 0 and 1.0.

The Error of Distribution Formula is:

$$B = z\sqrt{\frac{\pi(1-\pi)}{n}}$$

Where:

B = bound on the error of distribution (allowable error)

z = standard error

π = expected failure rate

n = sample size required

Solving for n provides:

$$n = \pi(1-\pi)\left(\frac{z}{B}\right)^2$$

One entity's population of components should be large enough to represent a sizeable sample of a vendor's overall population of manufactured devices. For this reason the following assumptions are made:
B = 5%
z = 1.96 (This equates to a 95% confidence level)
π = 4% (see number 5 below)
Using the equation above, n=59.0. The Standard Drafting Team chose to use the round number of 60 for the requirement.

2. Maintain the Components in each Segment according to the time-based maximum allowable intervals established in Tables 1-1 through 1-5 and Table 3 until results of maintenance activities for the Segment are available for a minimum of 30 individual Components of the Segment.

   An assumption that needs to be made when choosing a sample size is "the sampling distribution of the sample mean can be approximated by a normal probability distribution." The Central Limit Theorem states: "In selecting simple random samples of size *n* from a population, the sampling distribution of the sample mean *x* can be approximated by a normal probability distribution as the sample size becomes large." (Essentials of Statistics for Business and Economics, Anderson, Sweeney, Williams, 2003)

   To use the Central Limit Theorem in statistics, the population size should be large. The references below are supplied to help define what is large.

"… whenever we are using a large simple random sample (rule of thumb: n>=30), the central limit theorem enables us to conclude that the sampling distribution of the sample mean can be approximated by a normal distribution." (Essentials of Statistics for Business and Economics, Anderson, Sweeney, Williams, 2003)

"If samples of size n, when n>=30, are drawn from any population with a mean *u* and a standard deviation σ, the sampling distribution of sample means approximates a normal distribution. The greater the sample size, the better the approximation." (Elementary Statistics - Picturing the World, Larson, Farber, 2003)

"The sample size is large (generally n>=30)… (Introduction to Statistics and Data Analysis - Second Edition, Peck, Olson, Devore, 2005)

"… the normal is often used as an approximation to the *t* distribution in a test of a null hypothesis about the mean of a normally distributed population when the population variance is estimated from a relatively large sample. A sample size exceeding 30 is often given as a minimal size in this connection." (Statistical Analysis for Business Decisions, Peters, Summers, 1968)

3. Document the maintenance program activities and results for each Segment, including maintenance dates and Countable Events for each included Component.

   This requirement needs little justification. To analyze system performance, the activities and results must be documented.

4. Analyze the maintenance program activities and results for each Segment to determine the overall performance of the Segment and develop maintenance intervals.

   This requirement states the obvious for a program that is based on the performance results of the Segment.

5. Determine the maximum allowable maintenance interval for each Segment such that the Segment experiences **Countable Events** on no more than 4% of the Components within the segment, for the greater of either the last 30 Components maintained or all Components maintained in the previous year.

   The Performance Based Maintenance (PBM) program ensures no more than a 4% failure rate for each segment of a Component Type. The 4% number was developed using the following:

   - General experience of the Standard Drafting Team (SDT) based on open discussions of past performance.

- Test results provided by Consumers Energy for the years 1998-2008 showing a yearly average of 7.5% out-of-tolerance relay test results and a yearly average of 1.5% defective rate.
- Two failure analysis reports from Tennessee Valley Authority (TVA) where TVA identified problematic equipment based on a noticeably higher failure of a certain relay type (failure rate of 2.5%) and voltage transformer type (failure rate of 3.6%).

In addition to the number "30" discussion from number 2 above, the Error of Distribution formula discussed in number 1 above allows the number of Components that should be included in a sample size for evaluation of the appropriate testing interval to be smaller because a lower confidence level is acceptable since the sample testing is repeated or updated annually. For this reason, the following assumptions are made:
B = 5%
z = 1.44 (85% confidence level)
π = 4%
Using the equation above, n=31.8. The Standard Drafting Team chose to use the round number of 30.

6. At least annually, update the list of Protection System Components and Segments and/or description if any changes occur within the Segment.

   Annually was chosen as a reasonable time frame to update Component Segments due to Component installation, replacement, and retirement.

7. Perform maintenance on the greater of 5% of the components (addressed in the performance based PSMP) in each Segment or 3 individual Components within the Segment in each year.

   Note: this 5% threshold sets a practical limitation on total length of time between intervals at 20 years.

   This requirement ensures that a utility keeps a flow of recent data to use in its annual analysis. The Standard Drafting Team felt that 20 years was the maximum time that should be allowed before a Component should be checked or maintained. The minimum number of three allows for the same 20 years interval based on the minimum Segment population of 60 (60/3=20).
8. For the prior year, analyze the maintenance program activities and results for each segment to determine the overall performance of the segment.

   Annually was chosen as a reasonable time frame to allow for collection of new data to update the program's performance analysis.
9. Using the prior year's data, determine the maximum allowable maintenance interval for each Segment such that the segment experiences Countable Events on no more than 4% of the

Components within the Segment, for the greater of either the last 30 Components maintained or all components maintained in the previous year.

Refer to number 5 above.

10. If the components in a Protection System segment maintained through a performance-based PSMP experience 4% or more Countable Events, develop, document, and implement an action plan to reduce the countable events to less than 4% of the segment population within 3 years.

    The 4% number is discussed in number 5 above. Three years was chosen by the Standard Drafting Team because it allows time to modify the program and for the effects of a modified program to be observed.

Requirement R3:

R3. Each Transmission Owner, Generator Owner, and Distribution Provider that utilizes time-based maintenance programs shall maintain its Protection System Components that are included within the time-based maintenance program in accordance with the minimum maintenance activities and maximum maintenance intervals prescribed within Tables 1-1 through 1-5, Table 2, and Table 3. *[Violation Risk Factor: High] [Time Horizon: Operations Planning]*

Background and Rationale

NERC Reliability Principle 1 establishes that "Interconnected bulk power systems shall be planned and operated in a coordinated manner to perform reliably under normal and abnormal conditions as defined in the NERC Standards."

NERC Reliability Principle 7 establishes that "The reliability of the interconnected bulk power systems shall be assessed, monitored, and maintained on a wide-area basis."

The proper performance of Protection Systems is fundamental to the reliability of the Bulk Electric System (BES) as embodied in Reliability Principles 1 and 7, and proper performance of Protection Systems cannot be assured without periodic maintenance of those systems.

Therefore, Requirement R3 requires the implementation of the minimum maintenance activities and maximum allowable maintenance intervals as elucidated in Requirement R1 and the tables within the standard.

Requirement R4:

R4. Each Transmission Owner, Generator Owner, and Distribution Provider that utilizes performance-based maintenance programs in accordance with Requirement R2 shall implement and follow its PSMP for its Protection System Components that are included within the performance-based program. *[Violation Risk Factor: High] [Time Horizon: Operations Planning]*

Background and Rationale

NERC Reliability Principle 1 establishes that "Interconnected bulk power systems shall be planned and operated in a coordinated manner to perform reliably under normal and abnormal conditions as defined in the NERC Standards."

NERC Reliability Principle 7 establishes that "The reliability of the interconnected bulk power systems shall be assessed, monitored, and maintained on a wide-area basis."

The proper performance of Protection Systems is fundamental to the reliability of the Bulk Electric System (BES) as embodied in Reliability Principles 1 and 7, and proper performance of Protection Systems cannot be assured without periodic maintenance of those systems.

Therefore, Requirement R4 requires the implementation of an entity's Protection System Maintenance Program established pursuant to Requirement R2.

Requirement R5:

R5. Each Transmission Owner, Generator Owner, and Distribution Provider shall demonstrate efforts to correct identified Unresolved Maintenance Issues. *[Violation Risk Factor: Medium] [Time Horizon: Operations Planning]*

Unresolved Maintenance Issue *- A deficiency identified during a maintenance activity that causes the component to not meet the intended performance, cannot be corrected during the maintenance interval, and requires follow-up corrective action.*

Background and Rationale

The reliability objective of this requirement is to assure that Protection System Components are returned to working order following the discovery of failures or malfunctions during scheduled maintenance. The maintenance activities specified in the Tables 1-1 through 1-5, Table 2, and Table 3 do not present any requirements related to restoration; therefore Requirement R5 of the Standard was developed to require the entity to "demonstrate efforts to correct identified Unresolved Maintenance Issues".

The SDT does not believe entities should be found in violation of a maintenance program requirement because of the inability to complete a remediation program within the original maintenance interval. The SDT does believe corrective actions should be timely but concludes it would be impossible to postulate all possible remediation projects and therefore, impossible to specify bounding time frames for resolution of all possible unresolved maintenance issues or what documentation might be sufficient to provide proof that effective corrective action has been initiated. Therefore Requirement R5 requires only the entity demonstrate efforts to correct the Unresolved Maintenance Issues.

Management of completion of the identified unresolved maintenance issue is a complex topic that falls outside of the scope of this standard. There can be any number of supply, process and management problems that make setting repair deadlines impossible. The SDT specifically chose to require the entity to "demonstrate efforts to correct …" because of the concern that many more complex unresolved maintenance issues might require greater than the remaining maintenance interval to resolve. For example, a problem might be identified on a VRLA battery during a 6 month check. In instances such as one that requiring battery replacement as part of the long term resolution, it is highly unlikely that the battery could be replaced in time to meet the 6 calendar month requirement for this maintenance activity.

During the period of time that the Protection System is operating in a degraded mode, NERC Standard PRC-001-1 requires that operating entities be informed of any Protection System failures that reduce reliability, and several NERC IRO-series and TOP-series standards require that operating entities operate the system in a manner that assures reliability while recognizing any system degradation.

Technical Justification

PRC-005-2 Protection System Maintenance

The purpose of the proposed PRC-005-2 Reliability Standard is to document and implement programs for the maintenance of all Protection Systems affecting the reliability of the Bulk Electric System (BES) so that these Protection Systems are kept in working order. The proposed Reliability Standard further combines the legacy Reliability Standards PRC-005-1b, PRC-008-0, PRC-011-0, and PRC-017-0, as these legacy Reliability Standards have similar reliability goals and requirements. This purpose is consistent with NERC's goal to create and implement reliability standards that enable or support at least one of the eight, defined Reliability Principles. The requirements of the proposed PRC-005-1 Reliability Standard directly support the following Reliability Principles:

> Reliability Principle 1 – Interconnected bulk power systems shall be planned and operated in a coordinated manner to perform reliably under normal and abnormal conditions as defined in the NERC Standards.
>
> Reliability Principle 7 – The reliability of the interconnected bulk power systems shall be assessed, monitored, and maintained on a wide-area basis.

The existing PRC-005-1b, PRC-008-0, PRC-011-0, and PRC-017-0 Reliability Standards, as assessed by the NERC System Protection and Control Task Force (SPCTF) in its report of March 8, 2007, contain several fundamental flaws within the requirements. Within this assessment, the SPCTF asserts, for all four standards, that:

> *"The listed requirements do not provide clear and sufficient guidance concerning the maintenance and testing of the Protection Systems to achieve the commonly stated purpose which is "To ensure all transmission and generation Protection Systems affecting the reliability of the Bulk Electric System (BES) are maintained and tested.""*

And further recommends that:

- *"The standards should clearly state which power system elements are being addressed."*
- *"The requirements should reflect the inherent differences between different technologies of protection systems."*
- *"The terms maintenance programs and testing programs should be clearly defined in the glossary. The terms "maintenance" and "testing" are not interchangeable, and the requirements must be clear in their application. Additional terms may also have to be added to the glossary for clarity."*
- *"The requirements of the existing standards, as stated, support time-based maintenance and testing, and should be expanded to include condition-based and performance-based maintenance and testing. The R1.2 summary of maintenance and testing procedures needs to*

have some minimum defined sub-requirements to insure that the stated intent of the standards is met to support review by the compliance monitor," and

- *The SPCTF recommends that standards PRC-005-1b, PRC-008-0, PRC-011-0, and PRC-017-0 … be included in a new Standard Authorization Request for a single Protection System maintenance and testing standard.*

Relative to PRC-005-1, the Federal Energy Regulatory Commission (FERC), in Order 693 further directed in paragraph 1476:

"… the Commission directs the ERO to develop a modification to PRC–005–1 through the Reliability Standards development process that includes a requirement that maintenance and testing of a protection system must be carried out within a maximum allowable interval that is appropriate to the type of the protection system and its impact on the reliability of the Bulk-Power System. We further direct the ERO to consider FirstEnergy's and ISO–NE's suggestion to combine PRC–005–1, PRC–008–0, PRC–011–0, and PRC–017–0 into a single Reliability Standard through the Reliability Standards development process."

FERC offered, in paragraphs 1492, 1517, and 1547, similar directives regarding PRC-008-0, PRC-011-0, and PRC-017-0, respectively.

With the development of the proposed PRC-005-2 Reliability Standard, the Standard Drafting Team (SDT) for Project 2007-17 – Protection System Maintenance, has followed the observations and recommendation of the NERC SPCTF assessment of PRC-005-1, PRC-008-0, PRC-011-0, and PRC-017-0. The SDT also addressed FERC's directives from Order 693. The SDT accomplishes this by:

1. Merging the reliability objectives of the four legacy standards.
2. Establishing minimum acceptable maintenance activities and accompanying maximum allowable maintenance intervals, reflecting various technologies of the ~~components~~ Components being addressed.
3. Providing entities the flexibility to implement condition-based maintenance by adjusting the minimum acceptable maintenance activities and maximum allowable maintenance intervals to reflect condition monitoring of the various Protection System ~~components~~Components, and
4. Providing requirements for effective implementation of a performance-based maintenance program.

The proposed PRC-005-2 Reliability Standard includes five requirements that:

1. Combine~~s~~ the reliability goals of developing detailed tables of minimum maintenance activities and maximum maintenance intervals for all five ~~c~~Component ~~t~~Types addressed within the NERC definition of Protection System. These tables include adjustments to those activities and intervals to reflect the benefits of any condition monitoring that may be present.

2. Require~~s~~, within Requirement R1, that entities using a time-based maintenance program (which includes condition-based maintenance) shall establish a Protection System Maintenance Program (PSMP) that conforms to the tables described above.
3. Establish~~es~~, within Requirement R2, the opportunity and requirements for establishment of a performance-based maintenance program for those entities that have (or wish to develop) sufficient performance observations for their Protection System ~~c~~Components such that they may determine maintenance intervals other than those specified within the tables while maintaining the level of reliability prescribed within the Standard.
4. Require~~s~~, within Requirements R3 and R4, that entities fully implement their PSMP as determined pursuant to Requirement R1 for time-based maintenance programs and Requirement R2 for performance-based maintenance programs, respectively.
5. Further require~~s~~, within Requirement R5, that entities ~~initiate resolution~~demonstrate efforts to correct ~~of~~ any ~~issues~~ deficiency identified ~~discovered~~ during a maintenance interval that causes the ~~entities to be~~Component to not meet the intended performance and requires follow-up corrective action in order ~~unable~~ to return ~~the associated components~~ it to good working order. The SDT elected to not require that entities complete the resolution of these issues, as the time required to effectively resolve the problems may vary widely depending on the scope of that resolution.

The proposed PRC-005-2 Reliability Standard provides a comprehensive set of requirements and associated information (within the tables) that define a strong PSMP. Entities that monitor the actual condition of their Protection System ~~c~~Components are further empowered to utilize the monitoring to improve the efficiency and effectiveness of their PSMP, and those entities that have extensive performance data regarding their Protection System ~~c~~Components ~~to~~ can utilize that performance data to further improve the efficiency and effectiveness of their PSMP.

Requirement R1:

R1. Each Transmission Owner, Generator Owner, and Distribution Provider shall establish a Protection System Maintenance Program (PSMP) for its Protection Systems identified in Section 4.2. *[Violation Risk Factor: Medium] [Time Horizon: Operations Planning]*

The PSMP shall:

1.1. *Identify which maintenance method (time-based, performance-based (per PRC-005 Attachment A), or a combination) is used to address each Protection System component type. All batteries associated with the station dc supply component type of a Protection System shall be included in a time-based program as described in Table 1-4 and Table 3.*

1.2. *Include the applicable monitoring attributes applied to each Protection System component type consistent with the maintenance intervals specified in Tables 1-1 through 1-5, Table 2, and Table 3 where monitoring is used to extend the maintenance intervals beyond those specified for unmonitored Protection System components.*

Background and Rationale

Establishment of a Protection System Maintenance Program as directed by Requirement R1 is needed to detect and correct plausible age- and service-related degradation of Protection System components. To ensure reliability of the Bulk Electric System, it is important that a Protection System continue to function as designed over its service life.

Requirement R1 establishes that entities develop a comprehensive maintenance program for Protection System components addressing the elements specified in the Protection System Maintenance Program definition:

Protection System Maintenance Program (PSMP) — An ongoing program by which Protection System components are kept in working order and proper operation of malfunctioning components is restored. A maintenance program for a specific component includes one or more of the following activities:

- Verify — Determine that the component is functioning correctly.
- Monitor — Observe the routine in-service operation of the component.
- Test — Apply signals to a component to observe functional performance or output behavior, or to diagnose problems.
- Inspect — Examine for~~Detect visible~~ signs of component failure, reduced performance and degradation.
- Calibrate — Adjust the operating threshold or measurement accuracy of a measuring element to meet the intended performance requirement.

Maintenance and testing programs often incorporate the following types of maintenance practices:

- TBM – time-based maintenance – externally prescribed maximum maintenance or testing intervals are applied for components or groups of components. The intervals may have been developed from prior experience or manufacturers' recommendations. The TBM verification interval is based on a variety of factors, including experience of the particular asset owner, collective experiences of several asset owners who are members of a country or regional council, etc. The maintenance intervals are fixed, and may range in number of months or in years.

  TBM can include review of recent power system events near the particular terminal. Operating records may verify that some portion of the Protection System has operated correctly since the last test occurred. If specific protection scheme components have demonstrated correct performance within specifications, the maintenance test time clock can be reset for those components.

- PBM – Performance-Based Maintenance - intervals are established based on analytical or historical results of TBM failure rates on a statistically significant population of similar components. Some level of TBM is generally followed. Statistical analyses accompanied by adjustments to maintenance intervals are used to justify continued use of PBM-developed extended intervals when test failures or in-service failures occur infrequently.

- CBM – condition-based maintenance – continuously or frequently reported results from non-disruptive self monitoring of components demonstrate operational status as those components remain in service. Whatever is verified by CBM does not require manual testing, but taking advantage of this requires precise technical focus on exactly what parts are included as part of the self diagnostics. While the term "Condition-Based-Maintenance" (CBM) is no longer used within the Standard itself, it is important to note that the concepts of CBM are a part of the Standard (in the form of extended time intervals through status-monitoring). These extended time intervals are only allowed (in the absence of PBM) if the condition of the device is monitored (CBM). As a consequence of the "monitored-basis-time-intervals" existing within the Standard the explanatory discussions within this Supplementary Reference concerned with CBM will remain in this reference and are discussed as CBM.

  A key feature of condition-based monitoring is that it effectively reduces the time delay between the moment of a protection failure and time the protection system owner knows about it, for the monitored segments of the protection system. In some cases, the verification is practically continuous - the time interval between verifications is minutes or seconds. Thus, technically sound, condition-based verification, meets the directives of FERC Order 693 even more effectively than the strictly time-based tests of the same system components.

  Microprocessor based Protection System components that perform continuous self-monitoring verify correct operation of most components within the device. Self-monitoring capabilities may include battery continuity, float voltages, unintentional grounds, the ac signal inputs to a

relay, analog measuring circuits, processors and memory for measurement, protection, and data communications, trip circuit monitoring, and protection or data communications signals (and many, many more measurements). For those conditions, failure of a self-monitoring routine generates an alarm and may inhibit operation to avoid false trips. When internal components, such as critical output relay contacts, are not equipped with self-monitoring, they can be manually tested. The method of testing may be local or remote, or through inherent performance of the scheme during a system event.

TBM, PBM, and CBM can be combined for individual components, or within a complete Protection System. The following diagram illustrates the relationship between various types of maintenance practices described in this section. In the Venn diagram the overlapping regions show the relationship of TBM with PBM historical information and the inherent continuous monitoring offered through CBM.

This figure shows:

- Region 1: The TBM intervals that are increased based on known reported operational condition of individual components that are monitoring themselves.
- Region 2: The TBM intervals that are adjusted up or down based on results of analysis of maintenance history of statistically significant population of similar products that have been subject to TBM.
- Region 3: Optimal TBM intervals based on regions 1 and 2.

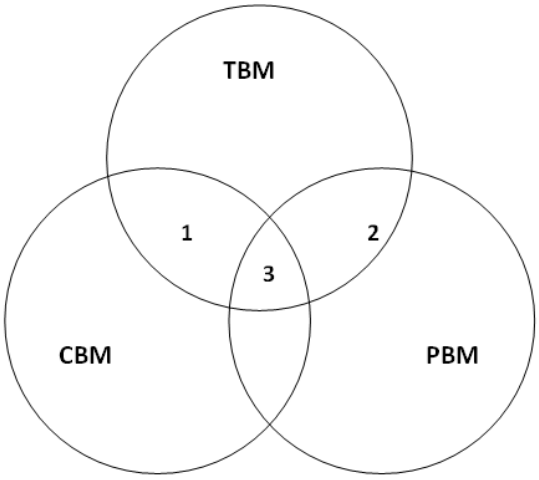

Relationship of time-based maintenance types

The PSMP shall:

R1, Part 1.1 Identify which maintenance method (time-based, performance-based ~~(~~per PRC-005 Attachment A~~)~~, or a combination) is used to address each Protection System component type.

R1, Part 1.1 gives entities the flexibility to choose between the various methods listed above to maintain their Protection System equipment.

All batteries associated with the station dc supply ~~component~~ Component ~~type~~ Type of a Protection System shall be included in a time-based program as described in Table 1-4 and Table 3.

Batteries are the only element of a Protection System that is a perishable item with a shelf life. As a perishable item batteries require not only a constant float charge to maintain their freshness (charge), but periodic inspection to determine if there are problems associated with their aging process and testing to see if they are maintaining a charge or can still deliver their rated output as required.

Besides being perishable, a second unique feature of a battery that is unlike any other Protection System element is that a battery uses chemicals, metal alloys, plastics, welds, and bonds that must interact with each other to produce the constant dc source required for Protection Systems, undisturbed by ac system disturbances.

No type of battery manufactured today for Protection System application is free from problems that can only be detected over time by inspection and test. These problems can arise from variances in the manufacturing process, chemicals and alloys used in the construction of the individual cells, quality of welds and bonds to connect the components, the plastics used to make batteries and the cell forming process for the individual battery cells.

Other problems that require periodic inspection and testing can result from transportation from the factory to the job site, length of time before a charge is put on the battery, the method of installation, the voltage level and duration of equalize charges, the float voltage level used, and the environment that the battery is installed in.

All of the above mentioned factors and several more not discussed here are beyond the control of the Functional Entities that want to use a performance-based Protection System Maintenance (PBM) program. These inherent variances in the aging process of a battery cell make establishment of a designated segment based on manufacturer and type of battery impossible.

R1, Part 1.2 **Include the applicable monitored~~ing~~ Component attributes applied to each Protection System ~~component~~ Component ~~type~~ Type consistent with the maintenance intervals specified in Tables 1-1 through 1-5, Table 2, and Table 3 where monitoring is used to extend the maintenance intervals beyond those specified for unmonitored Protection System ~~components~~Components.**

It is necessary for entities to specify the monitoring attributes utilized in their PSMP to demonstrate the existence of the monitoring elements which permit using the extended maintenance intervals established in Tables 1-1 through 1-5, Table 2, and Table 3 of the standard.

All maintenance is fundamentally time-based. Default time-based intervals are commonly established to assure proper functioning of each component of the Protection System, when data on the reliability of the components is not available other than observations from time-based maintenance. Excessive maintenance can actually decrease the reliability of the component or system. It is not unusual to cause failure of a component by removing it from service and restoring it. The improper application of test signals may cause failure of a component. Making use of the extended intervals by employing component monitoring minimizes human performance errors. The following factors may influence the established default intervals:

- If continuous indication of the functional condition of a component is available (from relays or chargers or any self monitoring device), then the intervals may be extended or manual testing may be eliminated. This is referred to as condition-based maintenance or CBM. CBM is valid only for precisely the components subject to monitoring. In the case of microprocessor-based relays, self-monitoring may not include automated diagnostics of every component within a microprocessor.
- Previous maintenance history for a group of components of a common type may indicate that the maintenance intervals can be extended while still achieving the desired level of performance. This is referred to as Performance-Based Maintenance or PBM. It is also sometimes referred to as reliability-centered maintenance or RCM, but PBM is used in this document.
- Observed proper operation of a component may be regarded as a maintenance verification of the respective component or element in a microprocessor-based device. For such an observation, the maintenance interval may be reset only to the degree that can be verified by data available on the operation. For example, the trip of an electromechanical relay for a fault verifies the trip contact and trip path, but only through the relays in series that actually operated; one operation of this relay cannot verify correct calibration.

Requirement R2:

Overview

Requirement 2, stated below, deals with Performance Based Maintenance. The requirement refers to Attachment A. Rather than simply list Attachment A, the requirements of Attachment A are listed below with a technical justification discussion for each. The criteria within Attachment A are largely based on application of statistical analysis theory.

Requirement R2

R2. Each Transmission Owner, Generator Owner, and Distribution Provider that uses performance-based maintenance intervals in its PSMP shall follow the procedure established in PRC-005 Attachment A to establish and maintain its performance-based intervals. *[Violation Risk Factor: Medium] [Time Horizon: Operations Planning]*

Background and Rationale

Performance Based Maintenance (PBM) is included in PRC-005-2 to allow utilities to adjust maintenance intervals based on their individual experience with equipment types and manufacture. The utility must create a segment of components with similar manufacture and model characteristics of statistically significant size.

> **Segment** – *Protection Systems or components of a consistent design standard, or a particular model or type from a single manufacturer that typically share other common elements. Consistent performance is expected across the entire population of a segment. A segment must contain at least sixty (60) individual components.*

Based on equipment failure(s) and out-of-tolerance(s), called ~~countable~~ Countable ~~events~~Events, in any given year, the utility then sets its maintenance interval to keep the ~~countable~~ Countable ~~events~~ Events below 4%. Performance Based Maintenance is discussed at length in Section 9.1 of the Supplemental Reference for PRC-005-2. Many of the technical justifications shown below come from of the Supplemental Reference. Each requirement of Attachment A will now be listed and individually discussed.

> **Countable Event** – *A failure of a component ~~which has failed and requires~~requiring repair or replacement, any condition discovered during the maintenance activities in Tables 1-1 through 1-5 and Table 3 which requires corrective action, or a Misoperation attributed to hardware failure or calibration failure. Misoperations due to product design errors, software errors, relay settings different from specified settings, Protection System component configuration errors, or Protection System application errors are not included in Countable Events.*

1. Develop a list with a description of ~~components~~ Components included in each designated ~~segment~~ Segment of the Protection System ~~component~~ Component population, with a minimum **segment** population of 60 ~~components~~Components.

   A sample size requirement can be

estimated using the bound on the Error of Distribution Formula when the expected result is of a "Pass/Fail" format and will be between 0 and 1.0.

The Error of Distribution Formula is:

$$B = z\sqrt{\frac{\pi(1-\pi)}{n}}$$

Where:

B = bound on the error of distribution (allowable error)

z = standard error

π = expected failure rate

n = sample size required

Solving for n provides:

$$n = \pi(1-\pi)\left(\frac{z}{B}\right)^2$$

One entity's population of components should be large enough to represent a sizeable sample of a vendor's overall population of manufactured devices. For this reason the following assumptions are made:
B = 5%
z = 1.96 (This equates to a 95% confidence level)
π = 4% (see number 5 below)
Using the equation above, n=59.0. The Standard Drafting Team chose to use the round number of 60 for the requirement.

2. Maintain the ~~components~~ Components in each ~~segment~~ Segment according to the time-based maximum allowable intervals established in Tables 1-1 through 1-5 and Table 3 until results of maintenance activities for the ~~segment~~ Segment are available for a minimum of 30 individual ~~components~~ Components of the ~~segment~~Segment.

   An assumption that needs to be made when choosing a sample size is "the sampling distribution of the sample mean can be approximated by a normal probability distribution." The Central Limit Theorem states: "In selecting simple random samples of size *n* from a population, the sampling distribution of the sample mean *x* can be approximated by a normal probability distribution as the sample size becomes large." (Essentials of Statistics for Business and Economics, Anderson, Sweeney, Williams, 2003)

To use the Central Limit Theorem in statistics, the population size should be large. The references below are supplied to help define what is large.

> "… whenever we are using a large simple random sample (rule of thumb: n>=30), the central limit theorem enables us to conclude that the sampling distribution of the sample mean can be approximated by a normal distribution." (Essentials of Statistics for Business and Economics, Anderson, Sweeney, Williams, 2003)
>
> "If samples of size n, when n>=30, are drawn from any population with a mean *u* and a standard deviation σ, the sampling distribution of sample means approximates a normal distribution. The greater the sample size, the better the approximation." (Elementary Statistics - Picturing the World, Larson, Farber, 2003)
>
> "The sample size is large (generally n>=30)… (Introduction to Statistics and Data Analysis - Second Edition, Peck, Olson, Devore, 2005)
>
> "… the normal is often used as an approximation to the *t* distribution in a test of a null hypothesis about the mean of a normally distributed population when the population variance is estimated from a relatively large sample. A sample size exceeding 30 is often given as a minimal size in this connection." (Statistical Analysis for Business Decisions, Peters, Summers, 1968)

3. Document the maintenance program activities and results for each ~~segment~~Segment, including maintenance dates and ~~countable~~ Countable ~~events~~ Events for each included ~~component~~Component.

   This requirement needs little justification. To analyze system performance, the activities and results must be documented.

4. Analyze the maintenance program activities and results for each ~~segment~~ Segment to determine the overall performance of the ~~segment~~ Segment and develop maintenance intervals.

   This requirement states the obvious for a program that is based on the performance results of the ~~segment~~Segment.

5. Determine the maximum allowable maintenance interval for each ~~segment~~ Segment such that the ~~segment~~ Segment experiences **~~countable~~ Countable ~~events~~ Events** on no more than 4% of the ~~components~~ Components within the segment, for the greater of either the last 30 ~~components~~ Components maintained or all ~~components~~ Components maintained in the previous year.

The Performance Based Maintenance (PBM) program ensures no more than a 4% failure rate for each segment of a ~~component~~ Component ~~type~~Type. The 4% number was developed using the following:

- General experience of the Standard Drafting Team (SDT) based on open discussions of past performance.
- Test results provided by Consumers Energy for the years 1998-2008 showing a yearly average of 7.5% out-of-tolerance relay test results and a yearly average of 1.5% defective rate.
- Two failure analysis reports from Tennessee Valley Authority (TVA) where TVA identified problematic equipment based on a noticeably higher failure of a certain relay type (failure rate of 2.5%) and voltage transformer type (failure rate of 3.6%).

In addition to the number "30" discussion from number 2 above, the Error of Distribution formula discussed in number 1 above allows the number of ~~c~~Components that should be included in a sample size for evaluation of the appropriate testing interval to be smaller because a lower confidence level is acceptable since the sample testing is repeated or updated annually. For this reason, the following assumptions are made:

B = 5%

z = 1.44 (85% confidence level)

π = 4%

Using the equation above, n=31.8. The Standard Drafting Team chose to use the round number of 30.

6. At least annually, update the list of Protection System ~~components~~ Components and ~~segments~~ Segments and/or description if any changes occur within the ~~segment~~Segment.

   Annually was chosen as a reasonable time frame to update ~~component~~ Component ~~segments~~ Segments due to ~~component~~ Component installation, replacement, and retirement.

7. Perform maintenance on the greater of 5% of the components (addressed in the performance based PSMP) in each ~~segment~~ Segment or 3 individual ~~components~~ Components within the ~~segment~~ Segment in each year.

   Note: this 5% threshold sets a practical limitation on total length of time between intervals at 20 years.

   This requirement ensures that a utility keeps a flow of recent data to use in its annual analysis. The Standard Drafting Team felt that 20 years was the maximum time that should be allowed before a ~~component~~ Component should be checked or maintained. The minimum number of three allows for the same 20 years interval based on the minimum ~~segment~~ Segment population of 60 (60/3=20).

8. For the prior year, analyze the maintenance program activities and results for each segment to determine the overall performance of the segment.

   Annually was chosen as a reasonable time frame to allow for collection of new data to update the program's performance analysis.
9. Using the prior year's data, determine the maximum allowable maintenance interval for each ~~segment~~ Segment such that the segment experiences ~~countable~~ Countable ~~events~~ Events on no more than 4% of the ~~components~~ Components within the ~~segment~~Segment, for the greater of either the last 30 ~~components~~ Components maintained or all components maintained in the previous year.

   Refer to number 5 above.

10. If the components in a Protection System segment maintained through a performance-based PSMP experience 4% or more ~~countable~~ Countable ~~events~~Events, develop, document, and implement an action plan to reduce the countable events to less than 4% of the segment population within 3 years.

    The 4% number is discussed in number 5 above. Three years was chosen by the Standard Drafting Team because it allows time to modify the program and for the effects of a modified program to be observed.

Requirement R3:

R3. Each Transmission Owner, Generator Owner, and Distribution Provider that utilizes time-based maintenance programs shall maintain its Protection System ~~components~~ Components that are included within the time-based maintenance program in accordance with the minimum maintenance activities and maximum maintenance intervals prescribed within Tables 1-1 through 1-5, Table 2, and Table 3. *[Violation Risk Factor: High] [Time Horizon: Operations Planning]*

Background and Rationale

NERC Reliability Principle 1 establishes that "Interconnected bulk power systems shall be planned and operated in a coordinated manner to perform reliably under normal and abnormal conditions as defined in the NERC Standards."

NERC Reliability Principle 7 establishes that "The reliability of the interconnected bulk power systems shall be assessed, monitored, and maintained on a wide-area basis."

The proper performance of Protection Systems is fundamental to the reliability of the Bulk Electric System (BES) as embodied in Reliability Principles 1 and 7, and proper performance of Protection Systems cannot be assured without periodic maintenance of those systems.

Therefore, Requirement R3 requires the implementation of the minimum maintenance activities and maximum allowable maintenance intervals as elucidated in Requirement R1 and the tables within the standard.

Requirement R4:

R4. Each Transmission Owner, Generator Owner, and Distribution Provider that utilizes performance-based maintenance programs in accordance with Requirement R2 shall implement and follow its PSMP for its Protection System ~~components~~ Components that are included within the performance-based program. *[Violation Risk Factor: High] [Time Horizon: Operations Planning]*

Background and Rationale

NERC Reliability Principle 1 establishes that "Interconnected bulk power systems shall be planned and operated in a coordinated manner to perform reliably under normal and abnormal conditions as defined in the NERC Standards."

NERC Reliability Principle 7 establishes that "The reliability of the interconnected bulk power systems shall be assessed, monitored, and maintained on a wide-area basis."

The proper performance of Protection Systems is fundamental to the reliability of the Bulk Electric System (BES) as embodied in Reliability Principles 1 and 7, and proper performance of Protection Systems cannot be assured without periodic maintenance of those systems.

Therefore, Requirement R4 requires the implementation of an entity's Protection System Maintenance Program established pursuant to Requirement R2.

Requirement R5:

R5. Each Transmission Owner, Generator Owner, and Distribution Provider shall demonstrate efforts to correct identified Unresolved Maintenance Issues. *[Violation Risk Factor: Medium] [Time Horizon: Operations Planning]*

Unresolved Maintenance Issue *- A deficiency identified during a maintenance activity that causes the component to not meet the intended performance, cannot be corrected during the maintenance interval, and requires follow-up corrective action.*

Background and Rationale

The reliability objective of this requirement is to assure that Protection System ~~c~~Components are returned to working order following the discovery of failures or malfunctions during scheduled maintenance. The maintenance activities specified in the Tables 1-1 through 1-5, Table 2, and Table 3 do not present any requirements related to restoration; therefore Requirement R5 of the Standard was developed to require the entity to "demonstrate efforts to correct identified ~~unresolved~~ Unresolved ~~maintenance~~ Maintenance ~~issues~~Issues".

The SDT does not believe entities should be found in violation of a maintenance program requirement because of the inability to complete a remediation program within the original maintenance interval. The SDT does believe corrective actions should be timely but concludes it would be impossible to postulate all possible remediation projects and therefore, impossible to specify bounding time frames for resolution of all possible unresolved maintenance issues or what documentation might be sufficient to provide proof that effective corrective action has been initiated. Therefore Requirement R5 requires only the entity demonstrate efforts to correct the ~~unresolved~~ Unresolved ~~maintenance~~ Maintenance ~~issues~~Issues.

Management of completion of the identified unresolved maintenance issue is a complex topic that falls outside of the scope of this standard. There can be any number of supply, process and management problems that make setting repair deadlines impossible. The SDT specifically chose to require the entity to "demonstrate efforts to correct …" because of the concern that many more complex unresolved maintenance issues might require greater than the remaining maintenance interval to resolve. For example, a problem might be identified on a VRLA battery during a 6 month check. In instances such as one that requiring battery replacement as part of the long term resolution, it is highly unlikely that the battery could be replaced in time to meet the 6 calendar month requirement for this maintenance activity.

During the period of time that the Protection System is operating in a degraded mode, NERC Standard PRC-001-1 requires that operating entities be informed of any Protection System failures that reduce reliability, and several NERC IRO-series and TOP-series standards require that operating entities operate the system in a manner that assures reliability while recognizing any system degradation.

NERC
NORTH AMERICAN ELECTRIC RELIABILITY CORPORATION

Project 2007-17 Protection System Maintenance and Testing Mapping Document

Mapping Document Showing Translation of PRC-005-1b – Transmission and Generation Protection System Maintenance and Testing, PRC-008-0- Implementation and Documentation of Underfrequency Load Shedding Equipment Maintenance Program, PRC-011-0 – Undervoltage Load Shedding System Maintenance and Testing, and PRC-017-0 - Special Protection System Maintenance and Testing into PRC-005-2 – Protection System Maintenance.

Standard: PRC-005-1b - Transmission and Generation Protection System Maintenance and Testing		
Requirement in Approved Standard	**Translation to New Standard or Other Action**	**Proposed Language in PRC-005-2 – Protection System Maintenance Or Comment**
R1. Each Transmission Owner and any Distribution Provider that owns a transmission Protection System and each Generator Owner that owns a generation Protection System shall have Protection System maintenance and testing program for Protection Systems that affect the reliability of the BES. The program shall include: R1.1. Maintenance and testing intervals and their basis. R1.2. Summary of maintenance and testing procedures.	PRC-005-2, R1 and PRC-005-2, R2 PRC-005-2, Tables 1-1 through 1-5, Table 2, and Table 3.	R1. Each Transmission Owner, Generator Owner, and Distribution Provider shall establish a Protection System Maintenance Program (PSMP) for its Protection Systems identified in Section 4.2. The PSMP shall: 1.1. Identify which maintenance method (time-based, performance-based per PRC-005 Attachment A, or a combination) is used to address each Protection System Component Type. All batteries associated with the station dc supply Component Type of a Protection System shall be included in a time-based program as described in Table 1-4 and Table 3. 1.2. Include the applicable monitored Component attributes applied to each Protection System Component Type consistent with the maintenance intervals specified in Tables 1-1 through 1-5, Table 2, and Table 3 where monitoring is used to extend the maintenance intervals beyond

Standard: PRC-005-1b - Transmission and Generation Protection System Maintenance and Testing		
Requirement in Approved Standard	**Translation to New Standard or Other Action**	**Proposed Language in PRC-005-2 – Protection System Maintenance Or Comment**
		those specified for unmonitored Protection System Components. R2. Each Transmission Owner, Generator Owner, and Distribution Provider that uses performance-based maintenance intervals in its PSMP shall follow the procedure established in PRC-005 Attachment A to establish and maintain its performance-based intervals. See PRC-005-2 Tables 1-1 through 1-5, Table 2, and Table 3. The Tables establish prescribed maximum intervals and minimum maintenance activities, and, as such, the entity no longer needs to establish the basis for their intervals.
R2. Each Transmission Owner and any Distribution Provider that owns a transmission Protection System and each Generator Owner that owns a generation Protection System shall provide documentation of its Protection System maintenance and testing program and the implementation of that program to its Regional Reliability Organization on request (within 30 calendar days). The documentation of the program implementation shall include: R2.1. Evidence Protection System devices were maintained and tested within	PRC-005-2, R3 PRC-005-2, R4, PRC-005-2, M3, PRC-005-2, M4 NERC Compliance Monitoring Enforcement Program Data Retention 1.3	R3. Each Transmission Owner, Generator Owner, and Distribution Provider that utilizes time-based maintenance programs shall maintain its Protection System Components that are included within the time-based maintenance program in accordance with the minimum maintenance activities and maximum maintenance intervals prescribed within Tables 1-1 through 1-5, Table 2, and Table 3. R4. Each Transmission Owner, Generator Owner, and Distribution Provider that utilizes performance-based maintenance programs in accordance with Requirement R2 shall implement and follow its PSMP for its Protection System Components that are included within the performance-based program. The legacy requirement that the entity provide the program results to the RRO and NERC on

Standard: PRC-005-1b - Transmission and Generation Protection System Maintenance and Testing		
Requirement in Approved Standard	**Translation to New Standard or Other Action**	**Proposed Language in PRC-005-2 – Protection System Maintenance Or Comment**
the defined intervals. R2.2. Date each Protection System device was last tested/maintained.		request is addressed in the NERC Compliance Monitoring Enforcement Program. M3. Each Transmission Owner, Generator Owner, and Distribution Provider that utilizes time-based maintenance programs shall have evidence that it has maintained its Protection System Components included within its time-based program in accordance with Requirement R3. The evidence may include but is not limited to dated maintenance records, dated maintenance summaries, dated check-off lists, dated inspection records, or dated work orders. M4. Each Transmission Owner, Generator Owner, and Distribution Provider that utilizes a performance-based maintenance program in accordance with Requirement R2 shall have evidence that it has implemented the Protection System Maintenance Program for the Protection System Components included in its performance-based program in accordance with Requirement R4. The evidence may include but is not limited to dated maintenance records, dated maintenance summaries, dated check-off lists, dated inspection records, or dated work orders. 1.3 Data Retention For Requirement R2, Requirement R3, Requirement R4, and Requirement R5, the Transmission Owner, Generator Owner, and Distribution Provider shall each keep documentation of the two most recent

Standard: PRC-005-1b - Transmission and Generation Protection System Maintenance and Testing		
Requirement in Approved Standard	**Translation to New Standard or Other Action**	**Proposed Language in PRC-005-2 – Protection System Maintenance Or Comment**
		performances of each distinct maintenance activity for the Protection System Components, or all performances of each distinct maintenance activity for the Protection System Component since the previous scheduled audit date, whichever is longer.

Standard: PRC-008-0 - Implementation and Documentation of Underfrequency Load Shedding Equipment Maintenance Program		
Requirement in Approved Standard	**Translation to New Standard or Other Action**	**Proposed Language in PRC-005-2 – Protection System Maintenance or Comments**
R1. The Transmission Owner and Distribution Provider with a UFLS program (as required by its Regional Reliability Organization) shall have a UFLS equipment maintenance and testing program in place. This UFLS equipment maintenance and testing program shall include UFLS equipment identification, the schedule for UFLS equipment testing, and the schedule for UFLS equipment maintenance.	PRC-005-2, R1, R2, R3, R4, and Applicability 4.2.2 Tables 1-1 – 1-5, Table 2, and Table 3	See mapping of Requirements R1 and R2 for PRC-005-1 above. 4.2 Facilities 4.2.2 Protection Systems used for Underfrequency load-shedding systems installed per ERO Underfrequency load-shedding requirements. See PRC-005-2 Tables 1-1 through 1-5, Table 2, and Table 3. The Tables establish prescribed maximum intervals and minimum maintenance activities, and, as such, the entity no longer needs to establish the basis for their intervals.
R2. The Transmission Owner and Distribution Provider with a UFLS program (as required by its Regional Reliability Organization) shall implement its UFLS equipment maintenance and testing program and shall provide UFLS maintenance and testing program results to its Regional Reliability Organization and NERC on request (within 30 calendar days).	PRC-005-2, R3, PRC-002, R4 PRC-005-2, M3, and PRC-005-2 M4 NERC Compliance Monitoring Enforcement Program	See mapping of Requirements R1 and R2 for PRC-005-1 above. The legacy requirement that the entity provide the program results to the RRO and NERC on request is addressed in the NERC Compliance Monitoring Enforcement Program.

Standard: PRC-011-0 - Undervoltage Load Shedding System Maintenance and Testing		
Requirement in Approved Standard	**Translation to New Standard or Other Action**	**Proposed Language in PRC-005-2 – Protection System Maintenance or Comments**
R1. The Transmission Owner and Distribution Provider that owns a UVLS system shall have a UVLS equipment maintenance and testing program in place. This program shall include: **R1.1.** The UVLS system identification which shall include but is not limited to: **R1.1.1.** Relays. **R1.1.2.** Instrument transformers. **R1.1.3.** Communications systems, where appropriate. **R1.1.4.** Batteries. **R1.2.** Documentation of maintenance and testing intervals and their basis. **R1.3.** Summary of testing procedure. **R1.4.** Schedule for system testing. **R1.5.** Schedule for system maintenance. **R1.6.** Date last tested/maintained.	PRC-005-2, R1, PRC-005-2, R2, PRC-005-2, R3, PRC-005-2, R4, PRC-005-2 M3, PRC-005-2, M4, and PRC-005-2 Applicability 4.2.3 Tables 1-1 – 1-5, Table 2, and Table 3 Data Retention 1.3	See mapping of Requirements R1, and R2 for PRC-005-1 above. 4.2 Facilities 4.2.3 Protection Systems used for undervoltage load-shedding systems installed to prevent system voltage collapse or voltage instability for BES reliability. See PRC-005-2 Tables 1-1 through 1-5, Table 2, and Table 3. The Tables establish prescribed maximum intervals and minimum maintenance activities, and, as such, the entity no longer needs to establish the basis for their intervals. 1.3 Data Retention For Requirement R2, Requirement R3, Requirement R4, and Requirement R5, the Transmission Owner, Generator Owner, and Distribution Provider shall each keep documentation of the two most recent performances of each distinct maintenance activity for the Protection System Components, or all performances of each distinct maintenance activity for the Protection System Component since the previous scheduled audit date, whichever is longer.
R2. The Transmission Owner and Distribution Provider that owns a UVLS system shall provide documentation of its	NERC Compliance Monitoring Enforcement	The legacy requirement that the entity provide the program results to the RRO and NERC on request is addressed in the NERC Compliance

Standard: PRC-011-0 - Undervoltage Load Shedding System Maintenance and Testing		
Requirement in Approved Standard	**Translation to New Standard or Other Action**	**Proposed Language in PRC-005-2 – Protection System Maintenance or Comments**
UVLS equipment maintenance and testing program and the implementation of that UVLS equipment maintenance and testing program to its Regional Reliability Organization and NERC on request (within 30 calendar days).	Program	Monitoring Enforcement Program

Standard: PRC-017-0 - Special Protection System Maintenance and Testing		
Requirement in Approved Standard	**Translation to New Standard or Other Action**	**Proposed Language in PRC-005-2 – Protection System Maintenance or Comments**
R1. The Transmission Owner, Generator Owner, and Distribution Provider that owns an SPS shall have a system maintenance and testing program(s) in place. The program(s) shall include: **R1.1.** SPS identification shall include but is not limited to: **R1.1.1.** Relays. **R1.1.2.** Instrument transformers. **R1.1.3.** Communications systems, where appropriate. **R1.1.4.** Batteries. **R1.2.** Documentation of maintenance and testing intervals and their basis. **R1.3.** Summary of testing procedure. **R1.4.** Schedule for system testing. **R1.5.** Schedule for system maintenance. **R1.6.** Date last tested/maintained.	PRC-005-2, R1, PRC-005-2, R2, PRC-005-2, R3, PRC-005-2, R4, PRC-005-2 M3, PRC-005-2, M4, and PRC-005-2 Applicability 4.2.4 Tables 1-1 – 1-5, and Table 2 Data Retention 1.3	See mapping of Requirements R1, and R2 for PRC-005-1 above. 4.2 Facilities 4.2.4 Protection Systems installed as a Special Protection System (SPS) for BES reliability. See PRC-005-2 Tables 1-1 through 1-5 and Table 2. The Tables establish prescribed maximum intervals and minimum maintenance activities, and, as such, the entity no longer needs to establish the basis for their intervals. 1.3 Data Retention For Requirement R2, Requirement R3, Requirement R4, and Requirement R5, the Transmission Owner, Generator Owner, and Distribution Provider shall each keep documentation of the two most recent performances of each distinct maintenance activity for the Protection System Components, or all performances of each distinct maintenance activity for the Protection System Component since the previous scheduled audit date, whichever is longer.

Standard: PRC-017-0 - Special Protection System Maintenance and Testing		
Requirement in Approved Standard	**Translation to New Standard or Other Action**	**Proposed Language in PRC-005-2 – Protection System Maintenance Or Comment**
R2. The Transmission Owner, Generator Owner, and Distribution Provider that owns an SPS shall provide documentation of the program and its implementation to the appropriate Regional Reliability Organizations and NERC on request (within 30 calendar days).	NERC Compliance Monitoring Enforcement Program	R1. The legacy requirement that the entity provide the program results to the RRO and NERC on request is addressed in the NERC Compliance Monitoring Enforcement Program

NERC
NORTH AMERICAN ELECTRIC RELIABILITY CORPORATION

Project 2007-17 Protection System Maintenance and Testing Mapping Document

Mapping Document Showing Translation of PRC-005-~~1a~~1b – Transmission and Generation Protection System Maintenance and Testing, PRC-008-0- Implementation and Documentation of Underfrequency Load Shedding Equipment Maintenance Program, PRC-011-0 - Undervoltage Load Shedding System Maintenance and Testing, and PRC-017-0 - Special Protection System Maintenance and Testing into PRC-005-2 – Protection System Maintenance.

Standard: PRC-005-~~1~~1b - Transmission and Generation Protection System Maintenance and Testing		
Requirement in Approved Standard	**Translation to New Standard or Other Action**	**Proposed Language in PRC-005-2 – Protection System Maintenance Or Comment**
R1. Each Transmission Owner and any Distribution Provider that owns a transmission Protection System and each Generator Owner that owns a generation Protection System shall have ~~a~~ Protection System maintenance and testing program for Protection Systems that affect the reliability of the BES. The program shall include: R1.1. Maintenance and testing intervals and their basis. R1.2. Summary of maintenance and testing procedures.	PRC-005-2, R1 and PRC-005-2, R2 PRC-005-2, Tables 1-1 through 1-5, Table 2, and Table 3.	R1. Each Transmission Owner, Generator Owner, and Distribution Provider shall establish a Protection System Maintenance Program (PSMP) for its Protection Systems identified in Section 4.2. The PSMP shall: 1.1. Identify which maintenance method (time-based, performance-based ~~(~~per PRC-005 Attachment A~~)~~, or a combination) is used to address each Protection System ~~component type.~~Component Type. All batteries associated with the station dc supply ~~component type~~Component Type of a Protection System shall be included in a time-based program as described in Table 1-4 and Table 3. 1.2. Include the applicable ~~monitoring~~monitored Component attributes applied to each Protection System ~~component type~~Component Type consistent with the maintenance intervals specified in Tables 1-1 through 1-5, Table 2, and Table 3

Standard: PRC-005-~~1~~1b - Transmission and Generation Protection System Maintenance and Testing		
Requirement in Approved Standard	**Translation to New Standard or Other Action**	**Proposed Language in PRC-005-2 – Protection System Maintenance Or Comment**
		where monitoring is used to extend the maintenance intervals beyond those specified for unmonitored Protection System ~~components~~Components. R2. Each Transmission Owner, Generator Owner, and Distribution Provider that uses performance-based maintenance intervals in its PSMP shall follow the procedure established in PRC-005 Attachment A to establish and maintain its performance-based intervals. See PRC-005-2 Tables 1-1 through 1-5, Table 2, and Table 3. The Tables establish prescribed maximum intervals and minimum maintenance activities, and, as such, the entity no longer needs to establish the basis for their intervals.
R2. Each Transmission Owner and any Distribution Provider that owns a transmission Protection System and each Generator Owner that owns a generation Protection System shall provide documentation of its Protection System maintenance and testing program and the implementation of that program to its Regional Reliability Organization on request (within 30 calendar days). The documentation of the program implementation shall include:	PRC-005-2, R3 PRC-005-2, R4, PRC-005-2, M3, PRC-005-2, M4 NERC Compliance Monitoring Enforcement Program Data Retention 1.3	R3. Each Transmission Owner, Generator Owner, and Distribution Provider that utilizes time-based maintenance programs shall maintain its Protection System ~~components~~Components that are included within the time-based maintenance program in accordance with the minimum maintenance activities and maximum maintenance intervals prescribed within Tables 1-1 through 1-5, Table 2, and Table 3. R4. Each Transmission Owner, Generator Owner, and Distribution Provider that utilizes performance-based maintenance programs in accordance with Requirement R2 shall implement and follow its PSMP for its Protection System ~~components~~Components that are included within the performance-

Standard: PRC-005-~~1~~1b - Transmission and Generation Protection System Maintenance and Testing		
Requirement in Approved Standard	**Translation to New Standard or Other Action**	**Proposed Language in PRC-005-2 – Protection System Maintenance Or Comment**
R2.1. Evidence Protection System devices were maintained and tested within the defined intervals. R2.2. Date each Protection System device was last tested/maintained.		based program. The legacy requirement that the entity provide the program results to the RRO and NERC on request is addressed in the NERC Compliance Monitoring Enforcement Program. M3. Each Transmission Owner, Generator Owner, and Distribution Provider that utilizes time-based maintenance programs shall have evidence that it has maintained its Protection System ~~components~~Components included within its time-based program in accordance with Requirement R3. The evidence may include but is not limited to dated maintenance records, dated maintenance summaries, dated check-off lists, dated inspection records, or dated work orders. M4. Each Transmission Owner, Generator Owner, and Distribution Provider that utilizes a performance-based maintenance program in accordance with Requirement R2 shall have evidence that it has implemented the Protection System Maintenance Program for the Protection System ~~components~~Components included in its performance-based program in accordance with Requirement R4. The evidence may include but is not limited to dated maintenance records, dated maintenance summaries, dated check-off lists, dated inspection records, or dated work orders. 1.3 Data Retention For Requirement R2, Requirement R3,

Standard: PRC-005-~~1~~1b - Transmission and Generation Protection System Maintenance and Testing		
Requirement in Approved Standard	**Translation to New Standard or Other Action**	**Proposed Language in PRC-005-2 – Protection System Maintenance Or Comment**
		Requirement R4, and Requirement R5, the Transmission Owner, Generator Owner, and Distribution Provider shall each keep documentation of the two most recent performances of each distinct maintenance activity for the Protection System ~~components~~Components, or all performances of each distinct maintenance activity for the Protection System ~~component~~Component since the previous scheduled audit date, whichever is longer.

Standard: PRC-008-0 - Implementation and Documentation of Underfrequency Load Shedding Equipment Maintenance Program		
Requirement in Approved Standard	**Translation to New Standard or Other Action**	**Proposed Language in PRC-005-2 – Protection System Maintenance or Comments**
R1. The Transmission Owner and Distribution Provider with a UFLS program (as required by its Regional Reliability Organization) shall have a UFLS equipment maintenance and testing program in place. This UFLS equipment maintenance and testing program shall include UFLS equipment identification, the schedule for UFLS equipment testing, and the schedule for UFLS equipment maintenance.	PRC-005-2, R1, R2, R3, R4, and Applicability 4.2.2 Tables 1-1 – 1-5, Table 2, and Table 3	See mapping of Requirements R1 and R2 for PRC-005-1 above. 4.2 Facilities 4.2.2 Protection Systems used for ~~underfrequency~~Underfrequency load-shedding systems installed per ERO ~~underfrequency~~Underfrequency load-shedding requirements. See PRC-005-2 Tables 1-1 through 1-5, Table 2, and Table 3. The Tables establish prescribed maximum intervals and minimum maintenance activities, and, as such, the entity no longer needs to establish the basis for their intervals.
R2. The Transmission Owner and Distribution Provider with a UFLS program (as required by its Regional Reliability Organization) shall implement its UFLS equipment maintenance and testing program and shall provide UFLS maintenance and testing program results to its Regional Reliability Organization and NERC on request (within 30 calendar days).	PRC-005-2, R3, PRC-002, R4 PRC-005-2, M3, and PRC-005-2 M4 NERC Compliance Monitoring Enforcement Program	See mapping of Requirements R1 and R2 for PRC-005-1 above. The legacy requirement that the entity provide the program results to the RRO and NERC on request is addressed in the NERC Compliance Monitoring Enforcement Program.

Standard: PRC-011-0 - Undervoltage Load Shedding System Maintenance and Testing		
Requirement in Approved Standard	**Translation to New Standard or Other Action**	**Proposed Language in PRC-005-2 – Protection System Maintenance or Comments**
R1. The Transmission Owner and Distribution Provider that owns a UVLS system shall have a UVLS equipment maintenance and testing program in place. This program shall include: **R1.1.** The UVLS system identification which shall include but is not limited to: **R1.1.1.** Relays. **R1.1.2.** Instrument transformers. **R1.1.3.** Communications systems, where appropriate. **R1.1.4.** Batteries. **R1.2.** Documentation of maintenance and testing intervals and their basis. **R1.3.** Summary of testing procedure. **R1.4.** Schedule for system testing. **R1.5.** Schedule for system maintenance. **R1.6.** Date last tested/maintained.	PRC-005-2, R1, PRC-005-2, R2, PRC-005-2, R3, PRC-005-2, R4, PRC-005-2 M3, PRC-005-2, M4, and PRC-005-2 Applicability 4.2.3 Tables 1-1 – 1-5, Table 2, and Table 3 Data Retention 1.3	See mapping of Requirements R1, and R2 for PRC-005-1 above. 4.2 Facilities 4.2.3 Protection Systems used for undervoltage load-shedding systems installed to prevent system voltage collapse or voltage instability for BES reliability. See PRC-005-2 Tables 1-1 through 1-5, Table 2, and Table 3. The Tables establish prescribed maximum intervals and minimum maintenance activities, and, as such, the entity no longer needs to establish the basis for their intervals. 1.3 Data Retention For Requirement R2, Requirement R3, Requirement R4, and Requirement R5, the Transmission Owner, Generator Owner, and Distribution Provider shall each keep documentation of the two most recent performances of each distinct maintenance activity for the Protection System ~~components~~Components, or all performances of each distinct maintenance activity for the Protection System ~~component~~Component since the previous scheduled audit date, whichever is longer.
R2. The Transmission Owner and Distribution Provider that owns a UVLS system shall	NERC Compliance Monitoring Enforcement	The legacy requirement that the entity provide the program results to the RRO and NERC on request is addressed in the NERC Compliance

Standard: PRC-011-0 - Undervoltage Load Shedding System Maintenance and Testing		
Requirement in Approved Standard	**Translation to New Standard or Other Action**	**Proposed Language in PRC-005-2 – Protection System Maintenance or Comments**
provide documentation of its UVLS equipment maintenance and testing program and the implementation of that UVLS equipment maintenance and testing program to its Regional Reliability Organization and NERC on request (within 30 calendar days).	Program	Monitoring Enforcement Program

Standard: PRC-017-0 - Special Protection System Maintenance and Testing		
Requirement in Approved Standard	**Translation to New Standard or Other Action**	**Proposed Language in PRC-005-2 – Protection System Maintenance or Comments**
R1. The Transmission Owner, Generator Owner, and Distribution Provider that owns an SPS shall have a system maintenance and testing program(s) in place. The program(s) shall include: **R1.1.** SPS identification shall include but is not limited to: **R1.1.1.** Relays. **R1.1.2.** Instrument transformers. **R1.1.3.** Communications systems, where appropriate. **R1.1.4.** Batteries. **R1.2.** Documentation of maintenance and testing intervals and their basis. **R1.3.** Summary of testing procedure. **R1.4.** Schedule for system testing. **R1.5.** Schedule for system maintenance. **R1.6.** Date last tested/maintained.	PRC-005-2, R1, PRC-005-2, R2, PRC-005-2, R3, PRC-005-2, R4, PRC-005-2 M3, PRC-005-2, M4, and PRC-005-2 Applicability 4.2.4 Tables 1-1 – 1-5, and Table 2 Data Retention 1.3	See mapping of Requirements R1, and R2 for PRC-005-1 above. 4.2 Facilities 4.2.4 Protection Systems installed as a Special Protection System (SPS) for BES reliability. See PRC-005-2 Tables 1-1 through 1-5 and Table 2. The Tables establish prescribed maximum intervals and minimum maintenance activities, and, as such, the entity no longer needs to establish the basis for their intervals. 1.3 Data Retention For Requirement R2, Requirement R3, Requirement R4, and Requirement R5, the Transmission Owner, Generator Owner, and Distribution Provider shall each keep documentation of the two most recent performances of each distinct maintenance activity for the Protection System ~~components~~Components, or all performances of each distinct maintenance activity for the Protection System ~~component~~Component since the previous scheduled audit date, whichever is longer.

Standard: PRC-017-0 - Special Protection System Maintenance and Testing		
Requirement in Approved Standard	**Translation to New Standard or Other Action**	**Proposed Language in PRC-005-2 – Protection System Maintenance Or Comment**
R2. The Transmission Owner, Generator Owner, and Distribution Provider that owns an SPS shall provide documentation of the program and its implementation to the appropriate Regional Reliability Organizations and NERC on request (within 30 calendar days).	NERC Compliance Monitoring Enforcement Program	R1. The legacy requirement that the entity provide the program results to the RRO and NERC on request is addressed in the NERC Compliance Monitoring Enforcement Program

Internal Project Report

Project 2007-17
Protection System Maintenance and Testing

Issues -

Fill in the Blank Team

ISSUE: Okay if PRC-006 is fixed

"Okay if PRC-006 is fixed"

Assigned: Project 2007-17 - Protection System Maintenance and Testing

Addressed

Applicability section of PRC-005-2 (4.2.2) establishes applicability to UFLS established in accordance with ERO requirements.

Status: In Drafting Delivery: 11/7/2012

Solution Details: Applicability section of PRC-005-2 (4.2.2) establishes applicability to UFLS established in accordance with ERO requirements.

NERC Audit Observation Team

ISSUE: As applicable, each TO,DP and GOP shall have a protection system maintenance and testing program for protection systems that affect the reliability of the BES. Does this include major equipment like circuit breakers and transformers?

"As applicable, each TO,DP and GOP shall have a protection system maintenance and testing program for protection systems that affect the reliability of the BES. Does this include major equipment like circuit breakers and transformers?"

Assigned: Project 2007-17 - Protection System Maintenance and Testing

Addressed

Maintenance of Protection Systems on all BES equipment is included within this standard. See definition of Protection System.

Status: In Drafting Delivery: 11/7/2012

Solution Details: Maintenance of Protection Systems on all BES equipment is included within this standard. Circuit breakers and power transformers are not included in the definition of Protection System; instrument transformers are included within the definition. See definition of Protection System.

ISSUE: Determine what on schedule means. Is an entity who maintained/tested 95% of their relays at the same level of non-compliance as an entity who maintained/tested 10% of their relays?

"Determine what on schedule means. Is an entity who maintained/tested 95% of their relays at the same level of non-compliance as an entity who maintained/tested 10% of their relays?"

Assigned: Project 2007-17 - Protection System Maintenance and Testing

Addressed

The VSLs for maintenance program implementations (Requirements R3 and R4) establish different VSLs depending on the degree to which the program is implemented.

Status: In Drafting Delivery: 11/7/2012

Solution Details: The VSLs for maintenance program implementations (Requirements R3 and R4) have been phased such that an entity that misses only a few required activities will be at a lower VSL than entities that miss many such activities.

ISSUE: How do you verify compliance for for cts/pts? How do you audit these within a scheduled maintenance program. As part of the procedure, most have accepted visual inspection. Some entities state that testing of the relays verify functionality of the ct/pts

"How do you verify compliance for for cts/pts? How do you audit these within a scheduled maintenance program. As part of the procedure, most have accepted visual inspection. Some entities state that testing of the relays verify functionality of the ct/pts"

Assigned: Project 2007-17 - Protection System Maintenance and Testing

Addressed

Specific activities for current and voltage transformers have been defined within Table 1-3.

Status: In Drafting Delivery: 11/7/2012

Solution Details: Verification activities in Table 1-3 establish the activities required for the voltage and current sensing inputs to protective relays and associated circuitry from the voltage and current sensing devices.

ISSUE: How do you verify DC control power? All regions require functional testing of the breaker. This should include functional relay & station battery checks, including breaker tripping, not just a visual inspection.

"How do you verify DC control power? All regions require functional testing of the breaker. This should include functional relay & station battery checks, including breaker tripping, not just a visual inspection."

Assigned: Project 2007-17 - Protection System Maintenance and Testing

Addressed

Specific verification activities are established in Table 1-4.

Status: In Drafting Delivery: 11/7/2012

Solution Details: Specific activities for maintenance of dc control circuitry have been defined within Table 1-4. These activities include periodic verification of proper functioning of the dc control circuitry

Phase III/IV Team

ISSUE: All generation protection systems whose misoperations impact the bulk electric system

"All generation protection systems whose misoperations impact the bulk electric system"

Assigned: Project 2007-17 - Protection System Maintenance and Testing

Addressed

Specificity is provided in Applicability 4.2.5 addressing maintenance of Protection Systems for generator facilities.

Status: In Drafting Delivery: 11/7/2012

Solution Details: Specificity is provided in Applicability 4.2.5 addressing maintenance of Protection Systems for generator facilities.

ISSUE: All protection systems on the bulk electric system.

"All protection systems on the bulk electric system."

Assigned: Project 2007-17 - Protection System Maintenance and Testing

Addressed

The Applicabilty section of the standard defines the facilities to which the standard applies.

Status: In Drafting Delivery: 11/7/2012

Solution Details: The Applicabilty section of the standard defines the facilities to which the standard applies.

ISSUE: Modify applicability to clarfify that the requirements are applicable to the following:

"Modify applicability to clarfify that the requirements are applicable to the following:"

Assigned: Project 2007-17 - Protection System Maintenance and Testing

Addressed

The applicability section has been modified.

Status: In Drafting Delivery: 11/7/2012

Solution Details: The applicability section has been modified.

ISSUE: Need to add language to ensure the Regional Requirements focus on the most impactive scenarios

"Need to add language to ensure the Regional Requirements focus on the most impactive scenarios"

Assigned: Project 2007-17 - Protection System Maintenance and Testing

Addressed

The draft standard establishes minimim ERO-wide requirements; any Regional requirements would have to exceed the ERO requirements.

Status: In Drafting Delivery: 11/7/2012

Solution Details: The draft standard establishes minimim ERO-wide requirements; any Regional requirements would have to exceed the ERO requirements.

ISSUE: PRC 003 to 005 only address generator (and transmission) protective systems, without defining this term.

"PRC 003 to 005 only address generator (and transmission) protective systems, without defining this term."

Assigned: Project 2007-17 - Protection System Maintenance and Testing

Addressed

The applicability section addresses Protection Systems designed to provide protection for BES Element(s), and provides additional specificity regarding applicable generator Protection Systems.

Status: In Drafting Delivery: 11/7/2012

Solution Details: The applicability section addresses Protection Systems designed to provide protection for BES Element(s), and provides additional specificity regarding applicable generator Protection Systems.

ISSUE: There is no performance requirement or measure of effectiveness of a maintenance program required by the standard

"There is no performance requirement or measure of effectiveness of a maintenance program required by the standard"

Assigned: Project 2007-17 - Protection System Maintenance and Testing

Addressed

For Time-Based (or Condition-Based) maintenance, minimum activities and maximum intervals are specified; for performance-based maintenance, performance (or effectiveness) goals are established.

Status: In Drafting Delivery: 11/7/2012

Solution Details: For Time-Based (or Condition-Based) maintenance, minimum activities and maximum intervals are specified; for performance-based maintenance, performance (or effectiveness) goals are established.

Version 0 Team

ISSUE: Consistent wording from standard to standard required

"Consistent wording from standard to standard required"

Assigned: Project 2007-17 - Protection System Maintenance and Testing

Addressed

The SDT is combining the four legacy standards into one.

Status: In Drafting Delivery: 11/7/2012

Solution Details: The SDT is combining the four legacy standards into one.

ISSUE: Define evidence

"Define evidence"

Assigned: Project 2007-17 - Protection System Maintenance and Testing

Addressed

Requirements R3 and R4 state that the programs must be implemented. Evidence that the program is implemented is included in the Measures M3 and M4.

Status: In Drafting Delivery: 11/7/2012

Solution Details: Requirements R3 and R4 state that the programs must be implemented. Evidence that the program is implemented is included in the Measures M3 and M4.

ISSUE: Define evidence

"Define evidence"

Assigned: Project 2007-17 - Protection System Maintenance and Testing

Addressed

Requirements R3 and R4 state that the programs must be implemented. Evidence that the program is implemented is included in the Measures M3 and M4.

Status: In Drafting Delivery: 11/7/2012

Solution Details: Requirements R3 and R4 state that the programs must be implemented. Evidence that the program is implemented is included in the Measures M3 and M4.

ISSUE: Define evidence

"Define evidence"

Assigned: Project 2007-17 - Protection System Maintenance and Testing

Addressed

Requirements R3 and R4 state that the programs must be implemented. Evidence that the program is implemented is included in the Measures M3 and M4.

Status: In Drafting Delivery: 11/7/2012

Solution Details: Requirements R3 and R4 state that the programs must be implemented. Evidence that the program is implemented is included in the Measures M3 and M4.

ISSUE: Definition of evidence required

"Definition of evidence required"

Assigned: Project 2007-17 - Protection System Maintenance and Testing

Addressed

Requirements R3 and R4 state that the programs must be implemented. Evidence that the program is implemented is included in the Measures M3 and M4.

Status: In Drafting Delivery: 11/7/2012

Solution Details: Requirements R3 and R4 state that the programs must be implemented. Evidence that the program is implemented is included in the Measures M3 and M4.

ISSUE: Exemptions for those with shunt reactors

"Exemptions for those with shunt reactors"

Assigned: Project 2007-17 - Protection System Maintenance and Testing

Addressed

UV Relays on shunt reactors is not UVLS; these relays would be included as pertinent to relays ""applied on or to protect the BES"".

Status: In Drafting Delivery: 11/7/2012

Solution Details: UV Relays on shunt reactors is not UVLS; these relays would be included as pertinent to relays "applied on or to protect the BES".

ISSUE: Include breakers/switches in list

"Include breakers/switches in list"

Assigned: Project 2007-17 - Protection System Maintenance and Testing

Addressed

Breakers/switches are specifically NOT included in the Protection System definition, and therefore NOT addressed in the draft standard.

Status: In Drafting Delivery: 11/7/2012

Solution Details: Breakers/switches are specifically NOT included in the Protection System definition, and therefore NOT addressed in the draft standard.

ISSUE: Need to retain two dates

"Need to retain two dates"

Assigned: Project 2007-17 - Protection System Maintenance and Testing

Addressed

The Standard requires that data be retained for the last two maintenance intervals or to the last audit, whichever is longer.

Status: In Drafting Delivery: 11/7/2012

Solution Details: The Standard requires that data be retained for the last two maintenance intervals or to the last audit, whichever is longer.

FERC Staff

ISSUE: Definition of Protection System Maintenance Program (PSMP)

"Draft PRC-005-2 R3 does not address what maintenance means in the context of the standard itself. The standard only requires documentation of protection system maintenance and testing program with supporting documentation that devices were maintained and tested within the intervals defined in the process document and the date that each device was last tested and/or maintained. The ambiguity that arose was with a program that defines scheduled maintenance and testing, as opposed to just stating maintenance in general, but not unscheduled, leaving a gap in the plan"

Assigned: Project 2007-17 - Protection System Maintenance and Testing

Addressed

Definition of PSMP addresses key concerns

Status: In Drafting Delivery: 11/7/2012

Solution Details: Protection System Maintenance Program (PSMP) is defined within PRC-005-2 as "An ongoing program by which Protection System components are kept in working order and proper operation of malfunctioning components is restored." Further details are included, and this term is intended to be placed into the NERC Glossary of Terms when approved. <#CR><#LF>These concerns are otherwise beyond the scope of this standard, as reflected by the directives of FERC Order 693.<#CR><#LF>

Directives -

Mandatory Reliability Standards for the Bulk-Power System (Order 693)

DIRECTIVE: S- Ref 10351 - Maintenance and testing of a protection system must be carried out within a maximum allowable time interval that is appropriate for the type of protection system and its impact on the reliability of the bulk power system. 1

Due 4/10/2012

Para 1475

"1475. In addition, for the reasons discussed in the NOPR, the Commission directs the ERO to develop a modification to PRC-005-1 through the Reliability Standards
development process that includes a requirement that maintenance and testing of a protection system must be carried out within a maximum allowable interval that is
appropriate to the type of the protection system and its impact on the reliability of the Bulk-Power System."

Assigned: Project 2007-17 - Protection System Maintenance and Testing

Addressed

Specific maximum allowable intervals are included in the draft standard within Tables 1-1 through 1-5, and Table 2 for time-based programs.

Status: In Drafting Delivery: 2012

Solution Details: Specific maximum allowable intervals are included in the draft standard within Tables 1-1 through 1-5, and Table 2 for time-based programs. Also adding a requirement allowing performance-based maintenance intervals.

DIRECTIVE: S- Ref 10352 - Consider FirstEnergys and ISO-NEs suggestions to combine PRC-005, PRC-008, PRC-011, and PRC-017 into a single standard.

Para 1475

"Consider FirstEnergys and ISO-NEs suggestions to combine PRC-005, PRC-008, PRC-011, and PRC-017 into a single standard."

Assigned: Project 2007-17 - Protection System Maintenance and Testing

Addressed

These suggestions were adopted. The SDT is combining the four legacy standards into one.

Status: In Drafting Delivery: 2012

Solution Details: These suggestions were adopted. The SDT is combining the four legacy standards into one.

DIRECTIVE: S- Ref 10355 - Maintenance and testing of a protection system must be carried out within a maximum allowable time interval that is appropriate for the type of protection system and its impact on the reliability of the bulk power system.

Due 4/10/2012

Para 1492

"1492. In addition, the Commission directs the ERO to develop a modification to PRC-008-0 through the Reliability Standards development process that includes a requirement that maintenance and testing of a protection system must be carried out within a maximum allowable interval that is appropriate to the type of the protection system and its impact on the reliability of the Bulk-Power System."

Assigned: Project 2007-17 - Protection System Maintenance and Testing

Addressed

Specific maximum allowable intervals are included in the draft standard within Tables 1-1 through 1-5, and Table 3 for time-based programs.

Status: In Drafting Delivery: 2012

Solution Details: Specific maximum allowable intervals are included in the draft standard within Tables 1-1 through 1-5, and Table 3 for time-based programs. Also adding a requirement allowing performance-based maintenance intervals.

DIRECTIVE: S- Ref 10358 - Maintenance and testing of a protection system must be carried out within a maximum allowable time interval that is appropriate for the type of protection system and its impact on the reliability of the bulk power system.

Due 4/10/2012

Para 1516

"1516. The Commission believes that the proposal is presently part of the process. The Commission approves Reliability Standard PRC-011-0 as mandatory and enforceable. In addition, the Commission directs the ERO to submit a modification to PRC-011-0 through the Reliability Standards development process that includes a requirement that maintenance and testing of a protection system must be carried out within a maximum allowable interval that is appropriate to the type of the protection system and its impact on the reliability of the Bulk-Power System."

Assigned: Project 2007-17 - Protection System Maintenance and Testing

Addressed

Specific maximum allowable intervals are included in the draft standard within Tables 1-1 through 1-5, Table 2, and Table 3 for time-based programs.

Status: In Drafting Delivery: 2012

Solution Details: Specific maximum allowable intervals are included in the draft standard within Tables 1-1 through 1-5, Table 2, and Table 3 for time-based programs. Also adding a requirement allowing performance-based maintenance intervals.

DIRECTIVE: S- Ref 10362 - Maintenance and testing of a protection system must be carried out within a maximum allowable time interval that is appropriate for the type of protection system and its impact on the reliability of the bulk power system.

Para 1546

"Maintenance and testing of a protection system must be carried out within a maximum allowable time interval that is appropriate for the type of protection system and its impact on the reliability of the bulk power system."

Assigned: Project 2007-17 - Protection System Maintenance and Testing

Addressed

Specific maximum allowable intervals are included in the draft standard within Tables 1-1 through 1-5, and Table 2 for time-based programs. Also adding a requirement allowing performance-based maintenance intervals.

Status: In Drafting Delivery: 2012

Solution Details: Specific maximum allowable intervals are included in the draft standard within Tables 1-1 through 1-5, and Table 2 for time-based programs. Also adding a requirement allowing performance-based maintenance intervals.

NERC
NORTH AMERICAN ELECTRIC RELIABILITY CORPORATION

Project 2007-17 – PRC-005-2 Protection System Maintenance

This document provides the drafting team's justification for assignment of violation risk factors (VRFs) and violation severity levels (VSLs) for each requirement in PRC-005-2 — Protection System Maintenance.

Each primary requirement is assigned a VRF and a set of one or more VSLs. These elements support the determination of an initial value range for the Base Penalty Amount regarding violations of requirements in FERC-approved Reliability Standards, as defined in the ERO Sanction Guidelines.

The Protection System Maintenance and Testing Standard Drafting Team applied the following NERC criteria and FERC Guidelines when proposing VRFs and VSLs for the requirements under this project:

NERC Criteria - Violation Risk Factors

High Risk Requirement

A requirement that, if violated, could directly cause or contribute to bulk electric system instability, separation, or a cascading sequence of failures, or could place the bulk electric system at an unacceptable risk of instability, separation, or cascading failures; or, a requirement in a planning time frame that, if violated, could, under emergency, abnormal, or restorative conditions anticipated by the preparations, directly cause or contribute to bulk electric system instability, separation, or a cascading sequence of failures, or could place the bulk electric system at an unacceptable risk of instability, separation, or cascading failures, or could hinder restoration to a normal condition.

Medium Risk Requirement

A requirement that, if violated, could directly affect the electrical state or the capability of the bulk electric system, or the ability to effectively monitor and control the bulk electric system. However, violation of a medium risk requirement is unlikely to lead to bulk electric system instability, separation, or cascading failures; or, a requirement in a planning time frame that, if violated, could, under emergency, abnormal, or restorative conditions anticipated by the preparations, directly and adversely affect the electrical state or capability of the bulk electric system, or the ability to effectively monitor, control, or restore the bulk electric system. However, violation of a medium risk requirement is unlikely, under emergency, abnormal, or restoration conditions anticipated by the preparations, to lead to bulk electric system instability, separation, or cascading failures, nor to hinder restoration to a normal condition.

Lower Risk Requirement
A requirement that is administrative in nature and a requirement that, if violated, would not be expected to adversely affect the electrical state or capability of the bulk electric system, or the ability to effectively monitor and control the bulk electric system; or, a requirement that is administrative in nature and a requirement in a planning time frame that, if violated, would not, under the emergency, abnormal, or restorative conditions anticipated by the preparations, be expected to adversely affect the electrical state or capability of the bulk electric system, or the ability to effectively monitor, control, or restore the bulk electric system. A planning requirement that is administrative in nature.

FERC Violation Risk Factor Guidelines

Guideline (1) — Consistency with the Conclusions of the Final Blackout Report
The Commission seeks to ensure that Violation Risk Factors assigned to Requirements of Reliability Standards in these identified areas appropriately reflect their historical critical impact on the reliability of the Bulk-Power System.
In the VSL Order, FERC listed critical areas (from the Final Blackout Report) where violations could severely affect the reliability of the Bulk-Power System:

- Emergency operations
- Vegetation management
- Operator personnel training
- Protection systems and their coordination
- Operating tools and backup facilities
- Reactive power and voltage control
- System modeling and data exchange
- Communication protocol and facilities
- Requirements to determine equipment ratings
- Synchronized data recorders
- Clearer criteria for operationally critical facilities
- Appropriate use of transmission loading relief

Guideline (2) — Consistency within a Reliability Standard
The Commission expects a rational connection between the sub-Requirement Violation Risk Factor assignments and the main Requirement Violation Risk Factor assignment.

Guideline (3) — Consistency among Reliability Standards
The Commission expects the assignment of Violation Risk Factors corresponding to Requirements that address similar reliability goals in different Reliability Standards would be treated comparably.

Guideline (4) — Consistency with NERC's Definition of the Violation Risk Factor Level
Guideline (4) was developed to evaluate whether the assignment of a particular Violation Risk Factor level conforms to NERC's definition of that risk level.

Guideline (5) — Treatment of Requirements that Co-mingle More Than One Obligation
Where a single Requirement co-mingles a higher risk reliability objective and a lesser risk reliability objective, the VRF assignment for such Requirements must not be watered down to reflect the lower risk level associated with the less important objective of the Reliability Standard.

The following discussion addresses how the SDT considered FERC's VRF Guidelines 2 through 5. The team did not address Guideline 1 directly because of an apparent conflict between Guidelines 1 and 4. Whereas Guideline 1 identifies a list of topics that encompass nearly all topics within NERC's Reliability Standards and implies that these requirements should be assigned a "High" VRF, Guideline 4 directs assignment of VRFs based on the impact of a specific requirement to the reliability of the system. The SDT believes that Guideline 4 is reflective of the intent of VRFs in the first instance and therefore concentrated its approach on the reliability impact of the requirements.

PRC-005-2 Protection System Maintenance is a revision of PRC-005-1a Transmission and Generation Protection System Maintenance and Testing with the stated purpose: To document and implement programs for the maintenance of all Protection Systems affecting the reliability of the Bulk Electric System (BES) so that these Protection Systems are kept in working order. PRC-008-0 Implementation and Documentation of Underfrequency Load Shedding Equipment Maintenance Program, PRC-011-0 Undervoltage Load Shedding System Maintenance and Testing and PRC-017-0 Special Protection System Maintenance and Testing are also being replaced by merging them into PRC-005-2 in accordance with suggestions from FERC Order 693. PRC-005-2 also establishes maximum allowable maintenance intervals as directed by FERC in Order 693 in their discussion of the legacy standards PRC-005-1, PRC-008-0, PRC-011-0, and PRC-017-0.

PRC-005-2 has five (5) requirements that incorporate and enhance the intent of the requirements of PRC-005-1a, PRC-008-0, PRC-011-0, and PRC-017-0. Several Tables of minimum maintenance activities and maximum maintenance intervals are also included to addresses FERC's directives from Order 693. The revised standard requires that entities develop an appropriate Protection System Maintenance Program (PSMP), that they implement their PSMP, and that, in the event they are unable to restore Protection System Components to proper working order while performing maintenance, they initiate the follow-up activities necessary to resolve those maintenance issues.

The requirements of PRC-005-2 do not map, one-to-one, with the requirements of the legacy standards, each of which comingle various attributes addressed within the new standard; thus, a requirement-to-requirement comparison of VRFs is irrelevant. When developing VRFs for the

requirements of PRC-005-2, the Standard Drafting Team carefully considered the NERC criteria for developing VRFs, as well as the FERC VRF guidelines. Therefore, PRC-005-2 Requirements R3 and R4 are assigned a VRF of High, while Requirements R1, R2, and R5 are assigned VRFs of Medium.

PRC-005-2 Requirements R1 and R2 are related to developing and documenting a Protection System Maintenance Program. The Standard Drafting Team determined that the assignment of a VRF of Medium was consistent with the NERC criteria that violations of these requirements could directly affect the electrical state or the capability of the bulk electric system, or the ability to effectively monitor and control the bulk electric system but are unlikely to lead to bulk electric system instability, separation, or cascading failures. Additionally, a review of the body of existing NERC Standards with approved VRFs revealed that requirements with similar reliability objectives in other standards are largely assigned a VRF of Medium.

PRC-005-2 Requirements R3 and R4 are related to implementation of the Protection System Maintenance Program. The SDT determined that the assignment of a VRF of High was consistent with the NERC criteria that that violation of these requirements could directly cause or contribute to bulk electric system instability, separation, or a cascading sequence of failures, or could place the bulk electric system at an unacceptable risk of instability, separation, or cascading failures. Additionally, a review of the body of existing NERC Standards with approved VRFs revealed that requirements with similar reliability objectives in other standards are assigned a VRF of High.

PRC-005-2 Requirement R5 relates to the initiation of resolution of unresolved maintenance issues, which describe situations where an entity was unable to restore a Component to proper working order during the performance of the maintenance activity. The Standard Drafting Team determined that the assignment of a VRF of Medium was consistent with the NERC criteria that violation of this requirements could directly affect the electrical state or the capability of the bulk electric system, or the ability to effectively monitor and control the bulk electric system but are unlikely to lead to bulk electric system instability, separation, or cascading failures. Additionally, a review of the body of existing NERC Standards with approved VRFs revealed that requirements with similar reliability objectives in other standards are largely assigned a VRF of Medium.

NERC Criteria - Violation Severity Levels

Violation Severity Levels (VSLs) define the degree to which compliance with a requirement was not achieved. Each requirement must have at least one VSL. While it is preferable to have four VSLs for each requirement, some requirements do not have multiple "degrees" of noncompliant performance and may have only one, two, or three VSLs.

Violation severity levels should be based on the guidelines shown in the table below:

Lower	Moderate	High	Severe
Missing a minor element (or a small percentage) of the required performance The performance or product measured has significant value as it almost meets the full intent of the requirement.	Missing at least one significant element (or a moderate percentage) of the required performance. The performance or product measured still has significant value in meeting the intent of the requirement.	Missing more than one significant element (or is missing a high percentage) of the required performance or is missing a single vital Component. The performance or product has limited value in meeting the intent of the requirement.	Missing most or all of the significant elements (or a significant percentage) of the required performance. The performance measured does not meet the intent of the requirement or the product delivered cannot be used in meeting the intent of the requirement.

FERC Order on Violation Severity Levels

In its June 19, 2008 Order on Violation Severity Levels, FERC indicated it would use the following four guidelines for determining whether to approve VSLs:

Guideline 1: Violation Severity Level Assignments Should Not Have the Unintended Consequence of Lowering the Current Level of Compliance

- Compare the VSLs to any prior Levels of Non-compliance and avoid significant changes that may encourage a lower level of compliance than was required when Levels of Non-compliance were used.

Guideline 2: Violation Severity Level Assignments Should Ensure Uniformity and Consistency in the Determination of Penalties

- Guideline 2a: A violation of a "binary" type requirement must be a "Severe" VSL.
- Guideline 2b: Do not use ambiguous terms such as "minor" and "significant" to describe noncompliant performance.

Guideline 3: Violation Severity Level Assignment Should Be Consistent with the Corresponding Requirement

- VSLs should not expand on what is required in the requirement.

Guideline 4: Violation Severity Level Assignment Should Be Based on A Single Violation, Not on A Cumulative Number of Violations

- . . . unless otherwise stated in the requirement, each instance of non-compliance with a requirement is a separate violation. Section 4 of the Sanction Guidelines states that assessing penalties on a per violation per day basis is the "default" for penalty calculations.

VRF and VSL Justifications

VRF and VSL Justifications – PRC-005-2, R1	
Proposed VRF	**Medium**
NERC VRF Discussion	Failure to establish a Protection System Maintenance Program (PSMP) for Protection Systems designed to provide protection for BES Element(s) could directly affect the electrical state or the capability of the bulk power system. However, violation of this requirement is unlikely to lead to bulk power system instability, separation, or cascading failures. The applicable entities are always responsible for maintaining the reliability of the bulk power system regardless of the situation. This VRF emphasizes the risk to system performance that results from mal-performing Protection System Components. Failure to establish a Protection System Maintenance Program (PSMP) for Protection Systems will not, by itself, lead to instability, separation, or cascading failures. Thus, the requirement meets NERC's criteria for a Medium VRF.
FERC VRF G1 Discussion	Guideline 1- Consistency w/ Blackout Report: N/A
FERC VRF G2 Discussion	Guideline 2- Consistency within a Reliability Standard: The requirement has no sub-requirements so only one VRF was assigned. The requirement utilizes Parts to identify the items to be included within a Protection System Maintenance Program. The VRF for this requirement is consistent with others in the standard with regard to relative risk; therefore, there is no conflict.
FERC VRF G3 Discussion	Guideline 3- Consistency among Reliability Standards: The SDT has determined that there is no consistency among existing approved Standards relative to requirements of this nature. The SDT has assigned a MEDIUM VRF, which is consistent with recent FERC guidance on FAC-008-3 Requirement R2 and FAC-013-2 Requirement R1, which are similar in nature to PRC-005-2 Requirement R1.

VRF and VSL Justifications – PRC-005-2, R1	
Proposed VRF	**Medium**
FERC VRF G4 Discussion	Guideline 4- Consistency with NERC Definitions of VRFs: Failure to establish a Protection System Maintenance Program (PSMP) for Protection Systems designed to provide protection for BES Element(s) could directly affect the electrical state or the capability of the bulk power system. However, violation of this requirement is unlikely to lead to bulk power system instability, separation, or cascading failures. The applicable entities are always responsible for maintaining the reliability of the bulk power system regardless of the situation. This VRF emphasizes the risk to system performance that results from mal-performing Protection System Components. Failure to establish a Protection System Maintenance Program (PSMP) for Protection Systems will not, by itself, lead to instability, separation, or cascading failures. Thus, the requirement meets NERC's criteria for a Medium VRF..
FERC VRF G5 Discussion	Guideline 5- Treatment of Requirements that Co-mingle More than One Obligation: This requirement establishes a single risk-level, and the assigned VRF is consistent with that risk level.

Proposed VSL – PRC-005-2, R1			
Lower	**Moderate**	**High**	**Severe**
The responsible entity's PSMP failed to specify whether one Component Type is being addressed by time-based or performance-based maintenance, or a combination of both. (Part 1.1)	The responsible entity's PSMP failed to specify whether two Component Types are being addressed by time-based or performance-based maintenance, or a combination of both. (Part 1.1)	The responsible entity's PSMP failed to include the applicable monitoring attributes applied to each Protection System Component Type consistent with the maintenance intervals specified in Tables 1-1 through 1-	The responsible entity failed to establish a PSMP. OR The responsible entity failed to specify whether three or more Component Types are being

Proposed VSL – PRC-005-2, R1			
Lower	**Moderate**	**High**	**Severe**
OR The responsible entity's PSMP failed to include applicable station batteries in a time-based program (Part 1.1)		5, Table 2, and Table 3 where monitoring is used to extend the maintenance intervals beyond those specified for unmonitored Protection System Components (Part 1.2).	addressed by time-based or performance-based maintenance, or a combination of both. (Part 1.1).

VRF and VSL Justifications – PRC-005-2, R1	
NERC VSL Guidelines	Meets NERC's VSL Guidelines—There is an incremental aspect to the violation and the VSLs follow the guidelines for incremental violations.
FERC VSL G1 Violation Severity Level Assignments Should Not Have the Unintended Consequence of Lowering the Current Level of Compliance	This VSL is consistent with the current VSLs associated with the existing requirements of the standards being replaced by this proposed standard.
FERC VSL G2 Violation Severity Level Assignments Should Ensure Uniformity and Consistency in the Determination of Penalties Guideline 2a: The Single Violation Severity Level Assignment Category for "Binary" Requirements Is Not Consistent Guideline 2b: Violation Severity Level Assignments that Contain Ambiguous Language	Guideline 2a: N/A Guideline 2b: The proposed VSL does not use any ambiguous terminology, thereby supporting uniformity and consistency in the determination of similar penalties for similar violations.

VRF and VSL Justifications – PRC-005-2, R1	
FERC VSL G3 Violation Severity Level Assignment Should Be Consistent with the Corresponding Requirement	The proposed VSL uses similar terminology to that used in the associated requirement, and is therefore consistent with the requirement.
FERC VSL G4 Violation Severity Level Assignment Should Be Based on A Single Violation, Not on A Cumulative Number of Violations	The VSL is based on a single violation and not cumulative violations.

VRF and VSL Justifications – PRC-005-2, R2	
Proposed VRF	**Medium**
NERC VRF Discussion	Failure to properly establish a performance-based Protection System Maintenance Program (PSMP) for Protection Systems designed to provide protection for BES Element(s) could directly affect the electrical state or the capability of the bulk power system. However, violation of this requirement is unlikely to lead to bulk power system instability, separation, or cascading failures. The applicable entities are always responsible for maintaining the reliability of the bulk power system regardless of the situation. This VRF emphasizes the risk to system performance that results from mal-performing Protection System Components. Failure to properly establish a performance-based Protection System Maintenance Program (PSMP) for Protection Systems will not, by itself, lead to instability, separation, or cascading failures. Thus, the requirement meets NERC's criteria for a Medium VRF.
FERC VRF G1 Discussion	Guideline 1- Consistency w/ Blackout Report: N/A
FERC VRF G2 Discussion	Guideline 2- Consistency within a Reliability Standard: The requirement has no subpart(s); therefore, only one VRF was assigned and no conflict(s) exist.
FERC VRF G3 Discussion	Guideline 3- Consistency among Reliability Standards: The SDT has determined that there is no consistency among existing approved Standards relative to requirements of this nature. The SDT has assigned a MEDIUM VRF, which is consistent with recent FERC guidance on FAC-008-3 Requirement R2 and FAC-013-2 Requirement R1, which are similar in nature to PRC-005-2 Requirement R1.
FERC VRF G4 Discussion	Guideline 4- Consistency with NERC Definitions of VRFs: Failure to properly establish a performance-based Protection System Maintenance Program (PSMP) for .

VRF and VSL Justifications – PRC-005-2, R2	
Proposed VRF	**Medium**
	Protection Systems designed to provide protection for BES Element(s) could directly affect the electrical state or the capability of the bulk power system. However, violation of this requirement is unlikely to lead to bulk power system instability, separation, or cascading failures. The applicable entities are always responsible for maintaining the reliability of the bulk power system regardless of the situation. This VRF emphasizes the risk to system performance that results from mal-performing Protection System Components. Failure to properly establish a performance-based Protection System Maintenance Program (PSMP) for Protection Systems will not, by itself, lead to instability, separation, or cascading failures. Thus, the requirement meets NERC's criteria for a Medium VRF.
FERC VRF G5 Discussion	Guideline 5- Treatment of Requirements that Co-mingle More than One Obligation: This requirement establishes a single risk-level, and the assigned VRF is consistent with that risk level.

Proposed VSL – PRC-005-2, R2			
Lower	**Moderate**	**High**	**Severe**
The responsible entity uses performance-based maintenance intervals in its PSMP but failed to reduce Countable Events to no more than 4% within three years.	N/A	The responsible entity uses performance-based maintenance intervals in its PSMP but failed to reduce Countable Events to no more than 4% within four years.	The responsible entity uses performance-based maintenance intervals in its PSMP but: 1)Failed to establish the technical justification described within Requirement R2 for the initial use of the performance-based PSMP

Proposed VSL – PRC-005-2, R2			
Lower	**Moderate**	**High**	**Severe**
			OR 2) Failed to reduce countable events to no more than 4% within five years OR 3) Maintained a segment with less than 60 Components OR 4) Failed to: • Annually update the list of Components, OR • Annually perform maintenance on the greater of 5% of the segment population or 3 Components, OR • Annually analyze the program activities and results for each segment.

VRF and VSL Justifications – PRC-005-2, R2	
NERC VSL Guidelines	Meets NERC's VSL Guidelines—There is an incremental aspect to the violation and the VSLs follow the guidelines for incremental violations.
FERC VSL G1 Violation Severity Level Assignments Should Not Have the Unintended Consequence of Lowering the Current Level of Compliance	This VSL is consistent with the current VSLs associated with the existing requirements of the standards being replaced by this proposed standard.
FERC VSL G2 Violation Severity Level Assignments Should Ensure Uniformity and Consistency in the Determination of Penalties Guideline 2a: The Single Violation Severity Level Assignment Category for "Binary" Requirements Is Not Consistent	Guideline 2a: N/A Guideline 2b: The proposed VSL does not use any ambiguous terminology, thereby supporting uniformity and consistency in the determination of similar penalties for similar violations.

VRF and VSL Justifications – PRC-005-2, R2	
Guideline 2b: Violation Severity Level Assignments that Contain Ambiguous Language	
FERC VSL G3 Violation Severity Level Assignment Should Be Consistent with the Corresponding Requirement	The proposed VSL uses similar terminology to that used in the associated requirement, and is therefore consistent with the requirement.
FERC VSL G4 Violation Severity Level Assignment Should Be Based on A Single Violation, Not on A Cumulative Number of Violations	The VSL is based on a single violation and not cumulative violations.

VRF and VSL Justifications – PRC-005-2, R3	
Proposed VRF	**High**
NERC VRF Discussion	Failure to implement and follow its Protection System Maintenance Program (PSMP) could, under emergency, abnormal, or restorative conditions anticipated by the preparations, directly cause or contribute to bulk electric system instability, separation, or a cascading sequence of failures, or could place the bulk electric system at an unacceptable risk of instability, separation, or cascading failures, or could hinder restoration to a normal condition. Thus, this requirement meets the criteria for a High VRF.
FERC VRF G1 Discussion	Guideline 1- Consistency w/ Blackout Report: N/A
FERC VRF G2 Discussion	Guideline 2- Consistency within a Reliability Standard: The requirement has no subpart(s); therefore, only one VRF was assigned and no conflict(s) exist.
FERC VRF G3 Discussion	Guideline 3- Consistency among Reliability Standards: The only Reliability Standards with similar goals are those being replaced by this standard, and the High VRF assignment for this requirement is consistent with the assigned VRFs for companion requirements in those existing standards.
FERC VRF G4 Discussion	Guideline 4- Consistency with NERC Definitions of VRFs: Failure to implement and follow its Protection System Maintenance Program (PSMP) could, under emergency, abnormal, or restorative conditions anticipated by the preparations, directly cause or contribute to bulk electric system instability, separation, or a cascading sequence of failures, or could place the bulk electric system at an unacceptable risk of instability, separation, or cascading failures, or could hinder restoration to a normal condition. Thus, this requirement meets the criteria for a High VRF.
FERC VRF G5 Discussion	Guideline 5- Treatment of Requirements that Co-mingle More than One Obligation: This requirement establishes a single risk-level, and the assigned VRF is consistent with that risk level.

Proposed VSL – PRC-005-2, R3			
Lower	**Moderate**	**High**	**Severe**
For Protection System Components included within a time-based maintenance program, the responsible entity failed to maintain 5% or less of the total Components included within a specific Protection System Component Type, in accordance with the minimum maintenance activities and maximum maintenance intervals prescribed within Tables 1-1 through 1-5, Table 2, and Table 3.	For Protection System Components included within a time-based maintenance program, the responsible entity failed to maintain more than 5% but 10% or less of the total Components included within a specific Protection System Component Type, in accordance with the minimum maintenance activities and maximum maintenance intervals prescribed within Tables 1-1 through 1-5, Table 2, and Table 3.	For Protection System Components included within a time-based maintenance program, the responsible entity failed to maintain more than 10% but 15% or less of the total Components included within a specific Protection System Component Type, in accordance with the minimum maintenance activities and maximum maintenance intervals prescribed within Tables 1-1 through 1-5, Table 2, and Table 3.	For Protection System Components included within a time-based maintenance program, the responsible entity failed to maintain more than 15% of the total Components included within a specific Protection System Component Type, in accordance with the minimum maintenance activities and maximum maintenance intervals prescribed within Tables 1-1 through 1-5, Table 2, and Table 3.

VRF and VSL Justificati3ons – PRC-005-2, R3	
NERC VSL Guidelines	Meets NERC's VSL Guidelines—There is an incremental aspect to the violation and the VSLs follow the guidelines for incremental violations.
FERC VSL G1 Violation Severity Level Assignments Should Not Have the Unintended Consequence of Lowering the Current Level of Compliance	This VSL is consistent with the current VSLs associated with the existing requirements of the standards being replaced by this proposed standard.
FERC VSL G2 Violation Severity Level Assignments Should Ensure Uniformity and Consistency in the Determination of Penalties Guideline 2a: The Single Violation Severity Level Assignment Category for "Binary" Requirements Is Not Consistent Guideline 2b: Violation Severity Level Assignments that Contain Ambiguous Language	Guideline 2a: N/A Guideline 2b: The proposed VSL does not use any ambiguous terminology, thereby supporting uniformity and consistency in the determination of similar penalties for similar violations.

VRF and VSL Justifications – PRC-005-2, R3	
FERC VSL G3 Violation Severity Level Assignment Should Be Consistent with the Corresponding Requirement	The proposed VSL uses similar terminology to that used in the associated requirement, and is therefore consistent with the requirement.
FERC VSL G4 Violation Severity Level Assignment Should Be Based on A Single Violation, Not on A Cumulative Number of Violations	The VSL is based on a single violation and not cumulative violations.

VRF and VSL Justifications – PRC-005-2, R4	
Proposed VRF	**High**
NERC VRF Discussion	Failure to implement and follow its Protection System Maintenance Program (PSMP) could, under emergency, abnormal, or restorative conditions anticipated by the preparations, directly cause or contribute to bulk electric system instability, separation, or a cascading sequence of failures, or could place the bulk electric system at an unacceptable risk of instability, separation, or cascading failures, or could hinder restoration to a normal condition. Thus, this requirement meets the criteria for a High VRF.
FERC VRF G1 Discussion	Guideline 1- Consistency w/ Blackout Report: N/A
FERC VRF G2 Discussion	Guideline 2- Consistency within a Reliability Standard: The requirement has no subpart(s); therefore, only one VRF was assigned and no conflict(s) exist.
FERC VRF G3 Discussion	Guideline 3- Consistency among Reliability Standards: The only Reliability Standards with similar goals are those being replaced by this standard, and the High VRF assignment for this requirement is consistent with the assigned VRFs for companion requirements in those existing standards.
FERC VRF G4 Discussion	Guideline 4- Consistency with NERC Definitions of VRFs: Failure to implement and follow its Protection System Maintenance Program (PSMP) could, under emergency, abnormal, or restorative conditions anticipated by the preparations, directly cause or contribute to bulk electric system instability, separation, or a cascading sequence of failures, or could place the bulk electric system at an unacceptable risk of instability, separation, or cascading failures, or could hinder restoration to a normal condition. Thus, this requirement meets the criteria for a High VRF.
FERC VRF G5 Discussion	Guideline 5- Treatment of Requirements that Co-mingle More than One Obligation: This requirement establishes a single risk-level, and the assigned VRF is consistent with that risk level.

Proposed VSL – PRC-005-2, R4			
Lower	**Moderate**	**High**	**Severe**
For Protection System Components included within a performance-based maintenance program, the responsible entity failed to maintain 5% or less of the annual scheduled maintenance for a specific Protection System Component Type in accordance with their performance-based PSMP.	For Protection System Components included within a performance-based maintenance program, the responsible entity failed to maintain more than 5% but 10% or less of the annual scheduled maintenance for a specific Protection System Component Type in accordance with their performance-based PSMP.	For Protection System Components included within a performance-based maintenance program, the responsible entity failed to maintain more than 10% but 15% or less of the annual scheduled maintenance for a specific Protection System Component Type in accordance with their performance-based PSMP.	For Protection System Components included within a performance-based maintenance program, the responsible entity failed to maintain more than 15% of the annual scheduled maintenance for a specific Protection System Component Type in accordance with their performance-based PSMP.

VRF and VSL Justifications – PRC-005-2, R4	
NERC VSL Guidelines	Meets NERC's VSL Guidelines—There is an incremental aspect to the violation and the VSLs follow the guidelines for incremental violations.
FERC VSL G1 Violation Severity Level Assignments Should Not Have the Unintended Consequence of Lowering the Current Level of Compliance	This VSL is consistent with the current VSLs associated with the existing requirements of the standards being replaced by this proposed standard.
FERC VSL G2 Violation Severity Level Assignments Should Ensure Uniformity and Consistency in the Determination of Penalties Guideline 2a: The Single Violation Severity Level Assignment Category for "Binary" Requirements Is Not Consistent Guideline 2b: Violation Severity Level Assignments that Contain Ambiguous Language	Guideline 2a: N/A Guideline 2b: The proposed VSL does not use any ambiguous terminology, thereby supporting uniformity and consistency in the determination of similar penalties for similar violations.

VRF and VSL Justifications – PRC-005-2, R4	
FERC VSL G3 Violation Severity Level Assignment Should Be Consistent with the Corresponding Requirement	The proposed VSL uses similar terminology to that used in the associated requirement, and is therefore consistent with the requirement.
FERC VSL G4 Violation Severity Level Assignment Should Be Based on A Single Violation, Not on A Cumulative Number of Violations	The VSL is based on a single violation and not cumulative violations.

VRF and VSL Justifications – PRC-005-2, R5	
Proposed VRF	**Medium**
NERC VRF Discussion	Failure to initiate resolution of an unresolved maintenance issue for a Protection System Component could directly affect the electrical state or the capability of the bulk power system. However, violation of this requirement is unlikely to lead to bulk power system instability, separation, or cascading failures. The applicable entities are always responsible for maintaining the reliability of the bulk power system regardless of the situation. This VRF emphasizes the risk to system performance that results from mal-performing Protection System Components. Failure to initiate resolution of an unresolved maintenance issue for a Protection System Component will not, by itself, lead to instability, separation, or cascading failures. Thus, the requirement meets NERC's criteria for a Medium VRF.
FERC VRF G1 Discussion	Guideline 1- Consistency w/ Blackout Report: N/A
FERC VRF G2 Discussion	Guideline 2- Consistency within a Reliability Standard: The requirement has no subpart(s); therefore, only one VRF was assigned and no conflict(s) exist.
FERC VRF G3 Discussion	Guideline 3- Consistency among Reliability Standards: The only requirement within approved Standards, PRC-004-2a Requirements R1 and R2 contain a similar requirement and is assigned a HIGH VRF. However, these requirements contain several subparts, and the VRF must address the most egregious risk related to these subparts, and a comparison to these requirements may be irrelevant. PRC-022-1 Requirement R1.5 contains only a similar requirement, and is assigned a MEDIUM VRF. FAC-003-2 Requirement R5 contains only a similar requirement, and is assigned a MEDIUM VRF.
FERC VRF G4 Discussion	Guideline 4- Consistency with NERC Definitions of VRFs: Failure to initiate resolution of an unresolved maintenance issue for a Protection System Component could directly affect the electrical state or the capability of the bulk power system.

VRF and VSL Justifications – PRC-005-2, R5			
Proposed VRF	**Medium**		
	However, violation of this requirement is unlikely to lead to bulk power system instability, separation, or cascading failures. The applicable entities are always responsible for maintaining the reliability of the bulk power system regardless of the situation. This VRF emphasizes the risk to system performance that results from mal-performing Protection System Components. Failure to initiate resolution of an unresolved maintenance issue for a Protection System Component will not, by itself, lead to instability, separation, or cascading failures. Thus, the requirement meets NERC's criteria for a Medium VRF.		
FERC VRF G5 Discussion	Guideline 5- Treatment of Requirements that Co-mingle More than One Obligation: This requirement establishes a single risk-level, and the assigned VRF is consistent with that risk level.		
Proposed VSL – PRC-005-2, R5			
Lower	**Moderate**	**High**	**Severe**
The responsible entity failed to undertake efforts to correct 5 or fewer Unresolved Maintenance Issues.	The responsible entity failed to undertake efforts to correct greater than 5, but less than or equal to 10 Unresolved Maintenance Issues.	The responsible entity failed to undertake efforts to correct greater than 10, but less than or equal to 15 Unresolved Maintenance Issues.	The responsible entity failed to undertake efforts to correct greater than 15 Unresolved Maintenance Issues.

VRF and VSL Justifications – PRC-005-2, R5	
NERC VSL Guidelines	Meets NERC's VSL Guidelines—There is an incremental aspect to the violation and the VSLs follow the guidelines for incremental violations.
FERC VSL G1 Violation Severity Level Assignments Should Not Have the Unintended Consequence of Lowering the Current Level of Compliance	This is a new Requirement; consequently, there is no prior level of compliance.
FERC VSL G2 Violation Severity Level Assignments Should Ensure Uniformity and Consistency in the Determination of Penalties Guideline 2a: The Single Violation Severity Level Assignment Category for "Binary" Requirements Is Not Consistent Guideline 2b: Violation Severity Level Assignments that Contain Ambiguous Language	Guideline 2a: N/A Guideline 2b: The proposed VSL does not use any ambiguous terminology, thereby supporting uniformity and consistency in the determination of similar penalties for similar violations.

VRF and VSL Justifications – PRC-005-2, R5	
FERC VSL G3 Violation Severity Level Assignment Should Be Consistent with the Corresponding Requirement	The proposed VSL uses similar terminology to that used in the associated requirement, and is therefore consistent with the requirement.
FERC VSL G4 Violation Severity Level Assignment Should Be Based on A Single Violation, Not on A Cumulative Number of Violations	The VSL is based on a single violation and not cumulative violations.

NERC
NORTH AMERICAN ELECTRIC RELIABILITY CORPORATION

Project 2007-17 – PRC-005-2 Protection System Maintenance

This document provides the drafting team's justification for assignment of violation risk factors (VRFs) and violation severity levels (VSLs) for each requirement in PRC-005-2 — Protection System Maintenance.

Each primary requirement is assigned a VRF and a set of one or more VSLs. These elements support the determination of an initial value range for the Base Penalty Amount regarding violations of requirements in FERC-approved Reliability Standards, as defined in the ERO Sanction Guidelines.

The Protection System Maintenance and Testing Standard Drafting Team applied the following NERC criteria and FERC Guidelines when proposing VRFs and VSLs for the requirements under this project:

NERC Criteria - Violation Risk Factors

High Risk Requirement

A requirement that, if violated, could directly cause or contribute to bulk electric system instability, separation, or a cascading sequence of failures, or could place the bulk electric system at an unacceptable risk of instability, separation, or cascading failures; or, a requirement in a planning time frame that, if violated, could, under emergency, abnormal, or restorative conditions anticipated by the preparations, directly cause or contribute to bulk electric system instability, separation, or a cascading sequence of failures, or could place the bulk electric system at an unacceptable risk of instability, separation, or cascading failures, or could hinder restoration to a normal condition.

Medium Risk Requirement

A requirement that, if violated, could directly affect the electrical state or the capability of the bulk electric system, or the ability to effectively monitor and control the bulk electric system. However, violation of a medium risk requirement is unlikely to lead to bulk electric system instability, separation, or cascading failures; or, a requirement in a planning time frame that, if violated, could, under emergency, abnormal, or restorative conditions anticipated by the preparations, directly and adversely affect the electrical state or capability of the bulk electric system, or the ability to effectively monitor, control, or restore the bulk electric system. However, violation of a medium risk requirement is unlikely, under emergency, abnormal, or restoration conditions anticipated by the preparations, to lead to bulk electric system instability, separation, or cascading failures, nor to hinder restoration to a normal condition.

Lower Risk Requirement
A requirement that is administrative in nature and a requirement that, if violated, would not be expected to adversely affect the electrical state or capability of the bulk electric system, or the ability to effectively monitor and control the bulk electric system; or, a requirement that is administrative in nature and a requirement in a planning time frame that, if violated, would not, under the emergency, abnormal, or restorative conditions anticipated by the preparations, be expected to adversely affect the electrical state or capability of the bulk electric system, or the ability to effectively monitor, control, or restore the bulk electric system. A planning requirement that is administrative in nature.

FERC Violation Risk Factor Guidelines

Guideline (1) — Consistency with the Conclusions of the Final Blackout Report
The Commission seeks to ensure that Violation Risk Factors assigned to Requirements of Reliability Standards in these identified areas appropriately reflect their historical critical impact on the reliability of the Bulk-Power System.
In the VSL Order, FERC listed critical areas (from the Final Blackout Report) where violations could severely affect the reliability of the Bulk-Power System:

- Emergency operations
- Vegetation management
- Operator personnel training
- Protection systems and their coordination
- Operating tools and backup facilities
- Reactive power and voltage control
- System modeling and data exchange
- Communication protocol and facilities
- Requirements to determine equipment ratings
- Synchronized data recorders
- Clearer criteria for operationally critical facilities
- Appropriate use of transmission loading relief

Guideline (2) — Consistency within a Reliability Standard
The Commission expects a rational connection between the sub-Requirement Violation Risk Factor assignments and the main Requirement Violation Risk Factor assignment.

Guideline (3) — Consistency among Reliability Standards

The Commission expects the assignment of Violation Risk Factors corresponding to Requirements that address similar reliability goals in different Reliability Standards would be treated comparably.

Guideline (4) — Consistency with NERC's Definition of the Violation Risk Factor Level

Guideline (4) was developed to evaluate whether the assignment of a particular Violation Risk Factor level conforms to NERC's definition of that risk level.

Guideline (5) — Treatment of Requirements that Co-mingle More Than One Obligation

Where a single Requirement co-mingles a higher risk reliability objective and a lesser risk reliability objective, the VRF assignment for such Requirements must not be watered down to reflect the lower risk level associated with the less important objective of the Reliability Standard.

The following discussion addresses how the SDT considered FERC's VRF Guidelines 2 through 5. The team did not address Guideline 1 directly because of an apparent conflict between Guidelines 1 and 4. Whereas Guideline 1 identifies a list of topics that encompass nearly all topics within NERC's Reliability Standards and implies that these requirements should be assigned a "High" VRF, Guideline 4 directs assignment of VRFs based on the impact of a specific requirement to the reliability of the system. The SDT believes that Guideline 4 is reflective of the intent of VRFs in the first instance and therefore concentrated its approach on the reliability impact of the requirements.

PRC-005-2 Protection System Maintenance is a revision of PRC-005-1a Transmission and Generation Protection System Maintenance and Testing with the stated purpose: To document and implement programs for the maintenance of all Protection Systems affecting the reliability of the Bulk Electric System (BES) so that these Protection Systems are kept in working order. PRC-008-0 Implementation and Documentation of Underfrequency Load Shedding Equipment Maintenance Program, PRC-011-0 Undervoltage Load Shedding System Maintenance and Testing and PRC-017-0 Special Protection System Maintenance and Testing are also being replaced by merging them into PRC-005-2 in accordance with suggestions from FERC Order 693. PRC-005-2 also establishes maximum allowable maintenance intervals as directed by FERC in Order 693 in their discussion of the legacy standards PRC-005-1, PRC-008-0, PRC-011-0, and PRC-017-0.

PRC-005-2 has five (5) requirements that incorporate and enhance the intent of the requirements of PRC-005-1a, PRC-008-0, PRC-011-0, and PRC-017-0. Several Tables of minimum maintenance activities and maximum maintenance intervals are also included to addresses FERC's directives from Order 693. The revised standard requires that entities develop an appropriate Protection System Maintenance Program (PSMP), that they implement their PSMP, and that, in the event they are unable to restore Protection System ~~components~~Components to proper working order while performing maintenance, they initiate the follow-up activities necessary to resolve those maintenance issues.

The requirements of PRC-005-2 do not map, one-to-one, with the requirements of the legacy standards, each of which comingle various attributes addressed within the new standard; thus, a

requirement-to-requirement comparison of VRFs is irrelevant. When developing VRFs for the requirements of PRC-005-2, the Standard Drafting Team carefully considered the NERC criteria for developing VRFs, as well as the FERC VRF guidelines. Therefore, PRC-005-2 Requirements R3 and R4 are assigned a VRF of High, while Requirements R1, R2, and R5 are assigned VRFs of Medium.

PRC-005-2 Requirements R1 and R2 are related to developing and documenting a Protection System Maintenance Program. The Standard Drafting Team determined that the assignment of a VRF of Medium was consistent with the NERC criteria that violations of these requirements could directly affect the electrical state or the capability of the bulk electric system, or the ability to effectively monitor and control the bulk electric system but are unlikely to lead to bulk electric system instability, separation, or cascading failures. Additionally, a review of the body of existing NERC Standards with approved VRFs revealed that requirements with similar reliability objectives in other standards are largely assigned a VRF of Medium.

PRC-005-2 Requirements R3 and R4 are related to implementation of the Protection System Maintenance Program. The SDT determined that the assignment of a VRF of High was consistent with the NERC criteria that that violation of these requirements could directly cause or contribute to bulk electric system instability, separation, or a cascading sequence of failures, or could place the bulk electric system at an unacceptable risk of instability, separation, or cascading failures. Additionally, a review of the body of existing NERC Standards with approved VRFs revealed that requirements with similar reliability objectives in other standards are assigned a VRF of High.

PRC-005-2 Requirement R5 relates to the initiation of resolution of unresolved maintenance issues, which describe situations where an entity was unable to restore a ~~component~~Component to proper working order during the performance of the maintenance activity. The Standard Drafting Team determined that the assignment of a VRF of Medium was consistent with the NERC criteria that violation of this requirements could directly affect the electrical state or the capability of the bulk electric system, or the ability to effectively monitor and control the bulk electric system but are unlikely to lead to bulk electric system instability, separation, or cascading failures. Additionally, a review of the body of existing NERC Standards with approved VRFs revealed that requirements with similar reliability objectives in other standards are largely assigned a VRF of Medium.

NERC Criteria - Violation Severity Levels

Violation Severity Levels (VSLs) define the degree to which compliance with a requirement was not achieved. Each requirement must have at least one VSL. While it is preferable to have four VSLs for each requirement, some requirements do not have multiple "degrees" of noncompliant performance and may have only one, two, or three VSLs.

Violation severity levels should be based on the guidelines shown in the table below:

Lower	Moderate	High	Severe
Missing a minor element (or a small percentage) of the required performance The performance or product measured has significant value as it almost meets the full intent of the requirement.	Missing at least one significant element (or a moderate percentage) of the required performance. The performance or product measured still has significant value in meeting the intent of the requirement.	Missing more than one significant element (or is missing a high percentage) of the required performance or is missing a single vital ~~component~~Component. The performance or product has limited value in meeting the intent of the requirement.	Missing most or all of the significant elements (or a significant percentage) of the required performance. The performance measured does not meet the intent of the requirement or the product delivered cannot be used in meeting the intent of the requirement.

FERC Order on Violation Severity Levels

In its June 19, 2008 Order on Violation Severity Levels, FERC indicated it would use the following four guidelines for determining whether to approve VSLs:

Guideline 1: Violation Severity Level Assignments Should Not Have the Unintended Consequence of Lowering the Current Level of Compliance

- Compare the VSLs to any prior Levels of Non-compliance and avoid significant changes that may encourage a lower level of compliance than was required when Levels of Non-compliance were used.

Guideline 2: Violation Severity Level Assignments Should Ensure Uniformity and Consistency in the Determination of Penalties

- Guideline 2a: A violation of a "binary" type requirement must be a "Severe" VSL.
- Guideline 2b: Do not use ambiguous terms such as "minor" and "significant" to describe noncompliant performance.

Guideline 3: Violation Severity Level Assignment Should Be Consistent with the Corresponding Requirement

- VSLs should not expand on what is required in the requirement.

Guideline 4: Violation Severity Level Assignment Should Be Based on A Single Violation, Not on A Cumulative Number of Violations

- . . . unless otherwise stated in the requirement, each instance of non-compliance with a requirement is a separate violation. Section 4 of the Sanction Guidelines states that assessing penalties on a per violation per day basis is the "default" for penalty calculations.

VRF and VSL Justifications

VRF and VSL Justifications – PRC-005-2, R1	
Proposed VRF	**Medium**
NERC VRF Discussion	Failure to establish a Protection System Maintenance Program (PSMP) for Protection Systems designed to provide protection for BES Element(s) could directly affect the electrical state or the capability of the bulk power system. However, violation of this requirement is unlikely to lead to bulk power system instability, separation, or cascading failures. The applicable entities are always responsible for maintaining the reliability of the bulk power system regardless of the situation. This VRF emphasizes the risk to system performance that results from mal-performing Protection System Components. Failure to establish a Protection System Maintenance Program (PSMP) for Protection Systems will not, by itself, lead to instability, separation, or cascading failures. Thus, the requirement meets NERC's criteria for a Medium VRF.
FERC VRF G1 Discussion	Guideline 1- Consistency w/ Blackout Report: N/A
FERC VRF G2 Discussion	Guideline 2- Consistency within a Reliability Standard: The requirement has no sub-requirements so only one VRF was assigned. The requirement utilizes Parts to identify the items to be included within a Protection System Maintenance Program. The VRF for this requirement is consistent with others in the standard with regard to relative risk; therefore, there is no conflict.
FERC VRF G3 Discussion	Guideline 3- Consistency among Reliability Standards: The SDT has determined that there is no consistency among existing approved Standards relative to requirements of this nature. The SDT has assigned a MEDIUM VRF, which is consistent with recent FERC guidance on FAC-008-3 Requirement R2 and FAC-013-2 Requirement R1, which are similar in nature to PRC-005-2 Requirement R1.

VRF and VSL Justifications – PRC-005-2, R1	
Proposed VRF	**Medium**
FERC VRF G4 Discussion	Guideline 4- Consistency with NERC Definitions of VRFs: Failure to establish a Protection System Maintenance Program (PSMP) for Protection Systems designed to provide protection for BES Element(s) could directly affect the electrical state or the capability of the bulk power system. However, violation of this requirement is unlikely to lead to bulk power system instability, separation, or cascading failures. The applicable entities are always responsible for maintaining the reliability of the bulk power system regardless of the situation. This VRF emphasizes the risk to system performance that results from mal-performing Protection System Components. Failure to establish a Protection System Maintenance Program (PSMP) for Protection Systems will not, by itself, lead to instability, separation, or cascading failures. Thus, the requirement meets NERC's criteria for a Medium VRF..
FERC VRF G5 Discussion	Guideline 5- Treatment of Requirements that Co-mingle More than One Obligation: This requirement establishes a single risk-level, and the assigned VRF is consistent with that risk level.

Proposed VSL – PRC-005-2, R1			
Lower	**Moderate**	**High**	**Severe**
The responsible entity's PSMP failed to specify whether one ~~component type~~Component Type is being addressed by time-based or performance-based maintenance, or a combination of both. (Part 1.1)	The responsible entity's PSMP failed to specify whether two ~~component types~~Component Types are being addressed by time-based or performance-based maintenance, or a combination of both. (Part 1.1)	The responsible ~~entities'~~entity's PSMP failed to include the applicable monitoring attributes applied to each Protection System ~~component type~~Component Type consistent with the maintenance intervals specified in Tables 1-1 through 1-	The responsible entity failed to establish a PSMP. OR The responsible entity failed to specify whether three or more ~~component types~~Component Types are being

Proposed VSL – PRC-005-2, R1			
Lower	**Moderate**	**High**	**Severe**
OR The responsible entity's PSMP failed to include applicable station batteries in a time-based program (Part 1.1)		5, Table 2, and Table 3 where monitoring is used to extend the maintenance intervals beyond those specified for unmonitored Protection System ~~components~~Components (Part 1.2).	addressed by time-based or performance-based maintenance, or a combination of both. (Part 1.1).

VRF and VSL Justifications – PRC-005-2, R1	
NERC VSL Guidelines	Meets NERC's VSL Guidelines—There is an incremental aspect to the violation and the VSLs follow the guidelines for incremental violations.
FERC VSL G1 Violation Severity Level Assignments Should Not Have the Unintended Consequence of Lowering the Current Level of Compliance	This VSL is consistent with the current VSLs associated with the existing requirements of the standards being replaced by this proposed standard.
FERC VSL G2 Violation Severity Level Assignments Should Ensure Uniformity and Consistency in the Determination of Penalties Guideline 2a: The Single Violation Severity Level Assignment Category for "Binary" Requirements Is Not Consistent Guideline 2b: Violation Severity Level Assignments that Contain Ambiguous Language	Guideline 2a: N/A Guideline 2b: The proposed VSL does not use any ambiguous terminology, thereby supporting uniformity and consistency in the determination of similar penalties for similar violations.

VRF and VSL Justifications – PRC-005-2, R1	
FERC VSL G3 Violation Severity Level Assignment Should Be Consistent with the Corresponding Requirement	The proposed VSL uses similar terminology to that used in the associated requirement, and is therefore consistent with the requirement.
FERC VSL G4 Violation Severity Level Assignment Should Be Based on A Single Violation, Not on A Cumulative Number of Violations	The VSL is based on a single violation and not cumulative violations.

VRF and VSL Justifications – PRC-005-2, R2	
Proposed VRF	**Medium**
NERC VRF Discussion	Failure to properly establish a performance-based Protection System Maintenance Program (PSMP) for Protection Systems designed to provide protection for BES Element(s) could directly affect the electrical state or the capability of the bulk power system. However, violation of this requirement is unlikely to lead to bulk power system instability, separation, or cascading failures. The applicable entities are always responsible for maintaining the reliability of the bulk power system regardless of the situation. This VRF emphasizes the risk to system performance that results from mal-performing Protection System Components. Failure to properly establish a performance-based Protection System Maintenance Program (PSMP) for Protection Systems will not, by itself, lead to instability, separation, or cascading failures. Thus, the requirement meets NERC's criteria for a Medium VRF.
FERC VRF G1 Discussion	Guideline 1- Consistency w/ Blackout Report: N/A
FERC VRF G2 Discussion	Guideline 2- Consistency within a Reliability Standard: The requirement has no subpart(s); therefore, only one VRF was assigned and no conflict(s) exist.
FERC VRF G3 Discussion	Guideline 3- Consistency among Reliability Standards: The SDT has determined that there is no consistency among existing approved Standards relative to requirements of this nature. The SDT has assigned a MEDIUM VRF, which is consistent with recent FERC guidance on FAC-008-3 Requirement R2 and FAC-013-2 Requirement R1, which are similar in nature to PRC-005-2 Requirement R1.
FERC VRF G4 Discussion	Guideline 4- Consistency with NERC Definitions of VRFs: Failure to properly establish a performance-based Protection System Maintenance Program (PSMP) for .

VRF and VSL Justifications – PRC-005-2, R2	
Proposed VRF	**Medium**
	Protection Systems designed to provide protection for BES Element(s) could directly affect the electrical state or the capability of the bulk power system. However, violation of this requirement is unlikely to lead to bulk power system instability, separation, or cascading failures. The applicable entities are always responsible for maintaining the reliability of the bulk power system regardless of the situation. This VRF emphasizes the risk to system performance that results from mal-performing Protection System Components. Failure to properly establish a performance-based Protection System Maintenance Program (PSMP) for Protection Systems will not, by itself, lead to instability, separation, or cascading failures. Thus, the requirement meets NERC's criteria for a Medium VRF.
FERC VRF G5 Discussion	Guideline 5- Treatment of Requirements that Co-mingle More than One Obligation: This requirement establishes a single risk-level, and the assigned VRF is consistent with that risk level.

Proposed VSL – PRC-005-2, R2			
Lower	**Moderate**	**High**	**Severe**
The responsible entity uses performance-based maintenance intervals in its PSMP but failed to reduce ~~countable events~~Countable Events to ~~less~~no more than 4% within three years.	N/A	The responsible entity uses performance-based maintenance intervals in its PSMP but failed to reduce ~~countable events~~Countable Events to ~~less~~no more than 4% within four years.	The responsible entity uses performance-based maintenance intervals in its PSMP but: 1)Failed to establish the technical justification described within Requirement R2 for the initial use of the performance-based PSMP

Proposed VSL – PRC-005-2, R2			
Lower	**Moderate**	**High**	**Severe**
			OR 2) Failed to reduce countable events to ~~less~~no more than 4% within five years OR 3) Maintained a segment with less than 60 ~~components~~Components OR 4) Failed to: • Annually update the list of ~~components~~Components, OR • Annually perform maintenance on the greater of 5% of the segment population or 3 ~~components~~Components, OR • Annually analyze the program activities and results for each

			segment.
VRF and VSL Justifications – PRC-005-2, R2			
NERC VSL Guidelines	Meets NERC's VSL Guidelines—There is an incremental aspect to the violation and the VSLs follow the guidelines for incremental violations.		
FERC VSL G1 Violation Severity Level Assignments Should Not Have the Unintended Consequence of Lowering the Current Level of Compliance	This VSL is consistent with the current VSLs associated with the existing requirements of the standards being replaced by this proposed standard.		
FERC VSL G2 Violation Severity Level Assignments Should Ensure Uniformity and Consistency in the Determination of Penalties Guideline 2a: The Single Violation Severity Level Assignment Category for "Binary" Requirements Is Not Consistent	Guideline 2a: N/A Guideline 2b: The proposed VSL does not use any ambiguous terminology, thereby supporting uniformity and consistency in the determination of similar penalties for similar violations.		

VRF and VSL Justifications – PRC-005-2, R2	
Guideline 2b: Violation Severity Level Assignments that Contain Ambiguous Language	
FERC VSL G3 Violation Severity Level Assignment Should Be Consistent with the Corresponding Requirement	The proposed VSL uses similar terminology to that used in the associated requirement, and is therefore consistent with the requirement.
FERC VSL G4 Violation Severity Level Assignment Should Be Based on A Single Violation, Not on A Cumulative Number of Violations	The VSL is based on a single violation and not cumulative violations.

VRF and VSL Justifications – PRC-005-2, R3	
Proposed VRF	**High**
NERC VRF Discussion	Failure to implement and follow its Protection System Maintenance Program (PSMP) could, under emergency, abnormal, or restorative conditions anticipated by the preparations, directly cause or contribute to bulk electric system instability, separation, or a cascading sequence of failures, or could place the bulk electric system at an unacceptable risk of instability, separation, or cascading failures, or could hinder restoration to a normal condition. Thus, this requirement meets the criteria for a High VRF.
FERC VRF G1 Discussion	Guideline 1- Consistency w/ Blackout Report: N/A
FERC VRF G2 Discussion	Guideline 2- Consistency within a Reliability Standard: The requirement has no subpart(s); therefore, only one VRF was assigned and no conflict(s) exist.
FERC VRF G3 Discussion	Guideline 3- Consistency among Reliability Standards: The only Reliability Standards with similar goals are those being replaced by this standard, and the High VRF assignment for this requirement is consistent with the assigned VRFs for companion requirements in those existing standards.
FERC VRF G4 Discussion	Guideline 4- Consistency with NERC Definitions of VRFs: Failure to implement and follow its Protection System Maintenance Program (PSMP) could, under emergency, abnormal, or restorative conditions anticipated by the preparations, directly cause or contribute to bulk electric system instability, separation, or a cascading sequence of failures, or could place the bulk electric system at an unacceptable risk of instability, separation, or cascading failures, or could hinder restoration to a normal condition. Thus, this requirement meets the criteria for a High VRF.
FERC VRF G5 Discussion	Guideline 5- Treatment of Requirements that Co-mingle More than One Obligation: This requirement establishes a single risk-level, and the assigned VRF is consistent with that risk level.

Proposed VSL – PRC-005-2, R3			
Lower	**Moderate**	**High**	**Severe**
For Protection System ~~components~~Components included within a time-based maintenance program, the responsible entity failed to maintain 5% or less of the total ~~components~~Components included within a specific Protection System ~~component type~~Component Type, in accordance with the minimum maintenance activities and maximum maintenance intervals prescribed within Tables 1-1 through 1-5, Table 2, and Table 3.	For Protection System ~~components~~Components included within a time-based maintenance program, the responsible entity failed to maintain more than 5% but 10% or less of the total ~~components~~Components included within a specific Protection System ~~component type~~Component Type, in accordance with the minimum maintenance activities and maximum maintenance intervals prescribed within Tables 1-1 through 1-5, Table 2, and Table 3.	For Protection System ~~components~~Components included within a time-based maintenance program, the responsible entity failed to maintain more than 10% but 15% or less of the total ~~components~~Components included within a specific Protection System ~~component type~~Component Type, in accordance with the minimum maintenance activities and maximum maintenance intervals prescribed within Tables 1-1 through 1-5, Table 2, and Table 3.	For Protection System ~~components~~Components included within a time-based maintenance program, the responsible entity failed to maintain more than 15% of the total ~~components~~Components included within a specific Protection System ~~component type~~Component Type, in accordance with the minimum maintenance activities and maximum maintenance intervals prescribed within Tables 1-1 through 1-5, Table 2, and Table 3.

VRF and VSL Justificati3ons – PRC-005-2, R3	
NERC VSL Guidelines	Meets NERC's VSL Guidelines—There is an incremental aspect to the violation and the VSLs follow the guidelines for incremental violations.
FERC VSL G1 Violation Severity Level Assignments Should Not Have the Unintended Consequence of Lowering the Current Level of Compliance	This VSL is consistent with the current VSLs associated with the existing requirements of the standards being replaced by this proposed standard.
FERC VSL G2 Violation Severity Level Assignments Should Ensure Uniformity and Consistency in the Determination of Penalties Guideline 2a: The Single Violation Severity Level Assignment Category for "Binary" Requirements Is Not Consistent Guideline 2b: Violation Severity Level Assignments that Contain Ambiguous Language	Guideline 2a: N/A Guideline 2b: The proposed VSL does not use any ambiguous terminology, thereby supporting uniformity and consistency in the determination of similar penalties for similar violations.

VRF and VSL Justifications – PRC-005-2, R3	
FERC VSL G3 Violation Severity Level Assignment Should Be Consistent with the Corresponding Requirement	The proposed VSL uses similar terminology to that used in the associated requirement, and is therefore consistent with the requirement.
FERC VSL G4 Violation Severity Level Assignment Should Be Based on A Single Violation, Not on A Cumulative Number of Violations	The VSL is based on a single violation and not cumulative violations.

VRF and VSL Justifications – PRC-005-2, R4	
Proposed VRF	**High**
NERC VRF Discussion	Failure to implement and follow its Protection System Maintenance Program (PSMP) could, under emergency, abnormal, or restorative conditions anticipated by the preparations, directly cause or contribute to bulk electric system instability, separation, or a cascading sequence of failures, or could place the bulk electric system at an unacceptable risk of instability, separation, or cascading failures, or could hinder restoration to a normal condition. Thus, this requirement meets the criteria for a High VRF.
FERC VRF G1 Discussion	Guideline 1- Consistency w/ Blackout Report: N/A
FERC VRF G2 Discussion	Guideline 2- Consistency within a Reliability Standard: The requirement has no subpart(s); therefore, only one VRF was assigned and no conflict(s) exist.
FERC VRF G3 Discussion	Guideline 3- Consistency among Reliability Standards: The only Reliability Standards with similar goals are those being replaced by this standard, and the High VRF assignment for this requirement is consistent with the assigned VRFs for companion requirements in those existing standards.
FERC VRF G4 Discussion	Guideline 4- Consistency with NERC Definitions of VRFs: Failure to implement and follow its Protection System Maintenance Program (PSMP) could, under emergency, abnormal, or restorative conditions anticipated by the preparations, directly cause or contribute to bulk electric system instability, separation, or a cascading sequence of failures, or could place the bulk electric system at an unacceptable risk of instability, separation, or cascading failures, or could hinder restoration to a normal condition. Thus, this requirement meets the criteria for a High VRF.
FERC VRF G5 Discussion	Guideline 5- Treatment of Requirements that Co-mingle More than One Obligation: This requirement establishes a single risk-level, and the assigned VRF is consistent with that risk level.

Proposed VSL – PRC-005-2, R4			
Lower	**Moderate**	**High**	**Severe**
For Protection System ~~components~~Components included within a performance-based maintenance program, the responsible entity failed to maintain 5% or less of the annual scheduled maintenance for a specific Protection System ~~component type~~Component Type in accordance with their performance-based PSMP.	For Protection System ~~components~~Components included within a performance-based maintenance program, the responsible entity failed to maintain more than 5% but 10% or less of the annual scheduled maintenance for a specific Protection System ~~component type~~Component Type in accordance with their performance-based PSMP.	For Protection System ~~components~~Components included within a performance-based maintenance program, the responsible entity failed to maintain more than 10% but 15% or less of the annual scheduled maintenance for a specific Protection System ~~component type~~Component Type in accordance with their performance-based PSMP.	For Protection System ~~components~~Components included within a performance-based maintenance program, the responsible entity failed to maintain more than 15% of the annual scheduled maintenance for a specific Protection System ~~component type~~Component Type in accordance with their performance-based PSMP.

VRF and VSL Justifications – PRC-005-2, R4	
NERC VSL Guidelines	Meets NERC's VSL Guidelines—There is an incremental aspect to the violation and the VSLs follow the guidelines for incremental violations.
FERC VSL G1 Violation Severity Level Assignments Should Not Have the Unintended Consequence of Lowering the Current Level of Compliance	This VSL is consistent with the current VSLs associated with the existing requirements of the standards being replaced by this proposed standard.
FERC VSL G2 Violation Severity Level Assignments Should Ensure Uniformity and Consistency in the Determination of Penalties Guideline 2a: The Single Violation Severity Level Assignment Category for "Binary" Requirements Is Not Consistent Guideline 2b: Violation Severity Level Assignments that Contain Ambiguous Language	Guideline 2a: N/A Guideline 2b: The proposed VSL does not use any ambiguous terminology, thereby supporting uniformity and consistency in the determination of similar penalties for similar violations.

VRF and VSL Justifications – PRC-005-2, R4	
FERC VSL G3 Violation Severity Level Assignment Should Be Consistent with the Corresponding Requirement	The proposed VSL uses similar terminology to that used in the associated requirement, and is therefore consistent with the requirement.
FERC VSL G4 Violation Severity Level Assignment Should Be Based on A Single Violation, Not on A Cumulative Number of Violations	The VSL is based on a single violation and not cumulative violations.

VRF and VSL Justifications – PRC-005-2, R5	
Proposed VRF	**Medium**
NERC VRF Discussion	Failure to initiate resolution of an unresolved maintenance issue for a Protection System ~~component~~Component could directly affect the electrical state or the capability of the bulk power system. However, violation of this requirement is unlikely to lead to bulk power system instability, separation, or cascading failures. The applicable entities are always responsible for maintaining the reliability of the bulk power system regardless of the situation. This VRF emphasizes the risk to system performance that results from mal-performing Protection System Components. Failure to initiate resolution of an unresolved maintenance issue for a Protection System ~~component~~Component will not, by itself, lead to instability, separation, or cascading failures. Thus, the requirement meets NERC's criteria for a Medium VRF.
FERC VRF G1 Discussion	Guideline 1- Consistency w/ Blackout Report: N/A
FERC VRF G2 Discussion	Guideline 2- Consistency within a Reliability Standard: The requirement has no subpart(s); therefore, only one VRF was assigned and no conflict(s) exist.
FERC VRF G3 Discussion	Guideline 3- Consistency among Reliability Standards: The only requirement within approved Standards, PRC-004-2a Requirements R1 and R2 contain a similar requirement and is assigned a HIGH VRF. However, these requirements contain several subparts, and the VRF must address the most egregious risk related to these subparts, and a comparison to these requirements may be irrelevant. PRC-022-1 Requirement R1.5 contains only a similar requirement, and is assigned a MEDIUM VRF. FAC-003-2 Requirement R5 contains only a similar requirement, and is assigned a MEDIUM VRF.
FERC VRF G4 Discussion	Guideline 4- Consistency with NERC Definitions of VRFs: Failure to initiate resolution of an unresolved maintenance issue for a Protection System ~~component~~Component could directly affect the electrical state or the capability of the bulk power system.

VRF and VSL Justifications – PRC-005-2, R5			
Proposed VRF	**Medium**		
	However, violation of this requirement is unlikely to lead to bulk power system instability, separation, or cascading failures. The applicable entities are always responsible for maintaining the reliability of the bulk power system regardless of the situation. This VRF emphasizes the risk to system performance that results from mal-performing Protection System Components. Failure to initiate resolution of an unresolved maintenance issue for a Protection System ~~component~~Component will not, by itself, lead to instability, separation, or cascading failures. Thus, the requirement meets NERC's criteria for a Medium VRF.		
FERC VRF G5 Discussion	Guideline 5- Treatment of Requirements that Co-mingle More than One Obligation: This requirement establishes a single risk-level, and the assigned VRF is consistent with that risk level.		
Proposed VSL – PRC-005-2, R5			
Lower	**Moderate**	**High**	**Severe**
The responsible entity failed to undertake efforts to correct 5 or ~~less~~ fewer ~~unresolved maintenance issues~~Unresolved Maintenance Issues.	The responsible entity failed to undertake efforts to correct greater than 5, but less than or equal to 10 ~~unresolved maintenance issues.~~Unresolved Maintenance Issues.	The responsible entity failed to undertake efforts to correct greater than 10, but less than or equal to 15 ~~unresolved maintenance issues.~~Unresolved Maintenance Issues.	The responsible entity failed to undertake efforts to correct greater than 15 ~~unresolved maintenance issues~~Unresolved Maintenance Issues.

VRF and VSL Justifications – PRC-005-2, R5	
NERC VSL Guidelines	Meets NERC's VSL Guidelines—There is an incremental aspect to the violation and the VSLs follow the guidelines for incremental violations.
FERC VSL G1 Violation Severity Level Assignments Should Not Have the Unintended Consequence of Lowering the Current Level of Compliance	This is a new Requirement; consequently, there is no prior level of compliance.
FERC VSL G2 Violation Severity Level Assignments Should Ensure Uniformity and Consistency in the Determination of Penalties Guideline 2a: The Single Violation Severity Level Assignment Category for "Binary" Requirements Is Not Consistent Guideline 2b: Violation Severity Level Assignments that Contain Ambiguous Language	Guideline 2a: N/A Guideline 2b: The proposed VSL does not use any ambiguous terminology, thereby supporting uniformity and consistency in the determination of similar penalties for similar violations.

VRF and VSL Justifications – PRC-005-2, R5	
FERC VSL G3 Violation Severity Level Assignment Should Be Consistent with the Corresponding Requirement	The proposed VSL uses similar terminology to that used in the associated requirement, and is therefore consistent with the requirement.
FERC VSL G4 Violation Severity Level Assignment Should Be Based on A Single Violation, Not on A Cumulative Number of Violations	The VSL is based on a single violation and not cumulative violations.

Unofficial Comment Form for 3rd Draft of PRC-005-2: Protection System Maintenance

Project 2007-17

Please **DO NOT** use this form to submit comments on the 3rd draft of the standard for Protection System Maintenance. Please submit comments using the electronic comment form. Comments must be submitted by **June 27, 2012**. If you have questions please contact Al McMeekin at al.mcmeekin@nerc.net or by telephone at 803-530-1963.

http://www.nerc.com/filez/standards/Protection_System_Maintenance_Project_2007-17.html

Background Information:
The standard recently passed ballot with a quorum of 84.32% and weighted segment approval of 73.93%; for the VRF/VSL Non-binding poll the quorum was 80.72% with 64.88% casting a supporting opinion. The drafting team appreciates the affirmative votes and the constructive feedback provided by the commenters. The team modified the standard based on stakeholder comments and has posted the standard, implementation plan, and other supporting documents for a parallel 30-day formal comment period and 10-day successive ballot through June 27, 2012.

The Protection System Maintenance and Testing Standard Drafting Team (PSMT SDT) made several changes to PRC-005-2, including the associated definitions, based on comments received from industry. The changes include:

- **Definition of Protection System Maintenance Program (PSMP)**: Revised the "Inspect" element of the definition to "Examine for signs of component failure, reduced performance or degradation."
- **Definition of Unresolved Maintenance Issues:** Revised the definition for additional clarity. The definition now reads: "A deficiency identified during a maintenance activity that causes the component to not meet the intended performance, cannot be corrected during the maintenance interval, and requires follow-up corrective action."
- **Definition of Countable Event**: Revised the definition to "A failure of a Component requiring repair or replacement, any condition discovered during the maintenance activities in Tables 1-1 through 1-5 and Table 3 which requires corrective action or a Misoperation attributed to hardware failure or calibration failure. Misoperations due to product design errors, software errors, relay settings different from specified settings, Protection System Component configuration errors, or Protection System application errors are not included in Countable Events."

- **Applicability**: Clarified Applicability clause 4.2.5.4 to "Protection Systems for station service or excitation transformers connected to the generator bus of generators which are part of the BES, that act to trip the generator either directly or via lockout or tripping auxiliary relays."
- **Table 1-2 Component Type – Communication Systems:** The interval for the second portion of the first row of the Table was changed from 6 years to 12 years, and extensive changes were made to the last row of the Table.
- Several activities within Table 1-4a, Table 1-4b, Table 1-4c, Table 1-4d, and Table 1-4f, relating to verification that the station battery can perform properly, were modified with the assistance of representatives of the IEEE Stationary Battery Committee. **Note: Please see the Section 15.4 of the Supplementary Reference for background information on these changes**.
- The VSLs for Requirement R2 were modified from "reduce Countable Events to less than 4%" to "reduce Countable Events to no more than 4%."
- The Supplemental Reference and FAQ document was revised to reflect changes made to the draft standard and to address additional issues raised within comments.

You do not have to answer all questions. Enter All Comments in Simple Text Format.

For questions 1 and 2, please provide specific comments related to the individual question. Please reserve question 3 for general comments not related to questions 1 and 2. Comments not related to the specific question will not be addressed.

Insert a "check" mark in the appropriate boxes by double-clicking the gray areas.

1. In response to stakeholder input, the SDT made several changes to the standard and associated definitions as detailed below:

   - Revised the "Inspect" element of the definition of Protection System Maintenance Program (PSMP), the definition of the term Unresolved Maintenance Issues, and the definition of the term Countable Event.
   - Revised Clause 4.2.5.4 of the Applicability section of the standard.
   - Revised Table 1-2 "Component Type - Communications Systems."
   - Revised Tables 1-4a, 1-4b, 1-4c, 1-4d, and 1-4f "Component Type - Protection System Station dc Supply…."

   Do you agree with these changes? If not, please indicate which changes you do not agree with and provide specific suggestions in the comment area for improvements that would allow you to support the standard.

   ☐ Yes
   ☐ No
   Comments:

2. The SDT made complementary changes in the "Supplementary Reference and FAQ Document" to provide supporting discussion for the Requirements within the standard. Do you have any specific suggestions for further improvements?

   ☐ Yes
   ☐ No
   Comments:

3. If you have any other comments **<u>that you have NOT provided in response to the above questions</u>**, please provide them here. (Please do not repeat comments that you provided elsewhere.)

   Comments:

A. Introduction

1. Title: **Transmission and Generation Protection System Maintenance and Testing**

2. Number: PRC-005-1

3. Purpose: To ensure all transmission and generation Protection Systems affecting the reliability of the Bulk Electric System (BES) are maintained and tested.

4. Applicability

4.1. Transmission Owner.

4.2. Generator Owner.

4.3. Distribution Provider that owns a transmission Protection System.

5. Effective Date: May 1, 2006

B. Requirements

R1. Each Transmission Owner and any Distribution Provider that owns a transmission Protection System and each Generator Owner that owns a generation Protection System shall have a Protection System maintenance and testing program for Protection Systems that affect the reliability of the BES. The program shall include:

R1.1. Maintenance and testing intervals and their basis.

R1.2. Summary of maintenance and testing procedures.

R2. Each Transmission Owner and any Distribution Provider that owns a transmission Protection System and each Generator Owner that owns a generation Protection System shall provide documentation of its Protection System maintenance and testing program and the implementation of that program to its Regional Reliability Organization on request (within 30 calendar days). The documentation of the program implementation shall include:

R2.1. Evidence Protection System devices were maintained and tested within the defined intervals.

R2.2. Date each Protection System device was last tested/maintained.

C. Measures

M1. Each Transmission Owner and any Distribution Provider that owns a transmission Protection System and each Generator Owner that owns a generation Protection System that affects the reliability of the BES, shall have an associated Protection System maintenance and testing program as defined in Requirement 1.

M2. Each Transmission Owner and any Distribution Provider that owns a transmission Protection System and each Generator Owner that owns a generation Protection System that affects the reliability of the BES, shall have evidence it provided documentation of its associated Protection System maintenance and testing program and the implementation of its program as defined in Requirement 2.

D. Compliance

1. Compliance Monitoring Process

1.1. Compliance Monitoring Responsibility

Regional Reliability Organization.

1.2. Compliance Monitoring Period and Reset Time Frame

One calendar year.

1.3. Data Retention

The Transmission Owner and any Distribution Provider that owns a transmission Protection System and each Generator Owner that owns a generation Protection System, shall retain evidence of the implementation of its Protection System maintenance and testing program for three years.

The Compliance Monitor shall retain any audit data for three years.

1.4. Additional Compliance Information

The Transmission Owner and any Distribution Provider that owns a transmission Protection System and the Generator Owner that owns a generation Protection System, shall each demonstrate compliance through self-certification or audit (periodic, as part of targeted monitoring or initiated by complaint or event), as determined by the Compliance Monitor.

2. Levels of Non-Compliance

2.1. Level 1: Documentation of the maintenance and testing program provided was incomplete as required in R1, but records indicate maintenance and testing did occur within the identified intervals for the portions of the program that were documented.

2.2. Level 2: Documentation of the maintenance and testing program provided was complete as required in R1, but records indicate that maintenance and testing did not occur within the defined intervals.

2.3. Level 3: Documentation of the maintenance and testing program provided was incomplete, and records indicate implementation of the documented portions of the maintenance and testing program did not occur within the identified intervals.

2.4. Level 4: Documentation of the maintenance and testing program, or its implementation, was not provided.

E. Regional Differences

None identified.

Version History

Version	Date	Action	Change Tracking
0	April 1, 2005	Effective Date	New
1	December 1, 2005	1. Changed incorrect use of certain hyphens (-) to “en dash” (–) and “em dash (—).” 2. Added “periods” to items where appropriate. 3. Changed “Timeframe” to “Time Frame” in item D, 1.2.	01/20/05

A. Introduction

1. Title: **Implementation and Documentation of Underfrequency Load Shedding Equipment Maintenance Program**

2. Number: PRC-008-0

3. Purpose: Provide last resort system preservation measures by implementing an Under Frequency Load Shedding (UFLS) program.

4. Applicability:

4.1. Transmission Owner required by its Regional Reliability Organization to have a UFLS program

4.2. Distribution Provider required by its Regional Reliability Organization to have a UFLS program

5. Effective Date: April 1, 2005

B. Requirements

R1. The Transmission Owner and Distribution Provider with a UFLS program (as required by its Regional Reliability Organization) shall have a UFLS equipment maintenance and testing program in place. This UFLS equipment maintenance and testing program shall include UFLS equipment identification, the schedule for UFLS equipment testing, and the schedule for UFLS equipment maintenance.

R2. The Transmission Owner and Distribution Provider with a UFLS program (as required by its Regional Reliability Organization) shall implement its UFLS equipment maintenance and testing program and shall provide UFLS maintenance and testing program results to its Regional Reliability Organization and NERC on request (within 30 calendar days).

C. Measures

M1. Each Transmission Owner's and Distribution Provider's UFLS equipment maintenance and testing program contains the elements specified in Reliability Standard PRC-007-0_R1.

M2. Each Transmission Owner and Distribution Provider shall have evidence that it provided the results of its UFLS equipment maintenance and testing program's implementation to its Regional Reliability Organization and NERC on request (within 30 calendar days).

D. Compliance

1. Compliance Monitoring Process

1.1. Compliance Monitoring Responsibility

Compliance Monitor: Regional Reliability Organization.

1.2. Compliance Monitoring Period and Reset Timeframe

On request (within 30 calendar days).

1.3. Data Retention

None specified.

1.4. Additional Compliance Information

None.

2. Levels of Non-Compliance

2.1. Level 1: Documentation of the maintenance and testing program was incomplete, but records indicate implementation was on schedule.

2.2. Level 2: Complete documentation of the maintenance and testing program was provided, but records indicate that implementation was not on schedule.

2.3. Level 3: Documentation of the maintenance and testing program was incomplete, and records indicate implementation was not on schedule.

2.4. Level 4: Documentation of the maintenance and testing program, or its implementation was not provided.

E. Regional Differences

1. None identified.

Version History

Version	Date	Action	Change Tracking
0	April 1, 2005	Effective Date	New

A. Introduction

1. Title: **Undervoltage Load Shedding System Maintenance and Testing**

2. Number: PRC-011-0

3. Purpose: Provide system preservation measures in an attempt to prevent system voltage collapse or voltage instability by implementing an Undervoltage Load Shedding (UVLS) program.

4. Applicability:

4.1. Transmission Owner that owns a UVLS system

4.2. Distribution Provider that owns a UVLS system

5. Effective Date: April 1, 2005

B. Requirements

R1. The Transmission Owner and Distribution Provider that owns a UVLS system shall have a UVLS equipment maintenance and testing program in place. This program shall include:

R1.1. The UVLS system identification which shall include but is not limited to:

R1.1.1. Relays.

R1.1.2. Instrument transformers.

R1.1.3. Communications systems, where appropriate.

R1.1.4. Batteries.

R1.2. Documentation of maintenance and testing intervals and their basis.

R1.3. Summary of testing procedure.

R1.4. Schedule for system testing.

R1.5. Schedule for system maintenance.

R1.6. Date last tested/maintained.

R2. The Transmission Owner and Distribution Provider that owns a UVLS system shall provide documentation of its UVLS equipment maintenance and testing program and the implementation of that UVLS equipment maintenance and testing program to its Regional Reliability Organization and NERC on request (within 30 calendar days).

C. Measures

M1. Each Transmission Owner and Distribution Provider that owns a UVLS system shall have documentation that its UVLS equipment maintenance and testing program conforms with Reliability Standard PRC-011-0_R1.

M2. Each Transmission Owner and Distribution Provider that owns a UVLS system shall have evidence it provided documentation of its UVLS equipment maintenance and testing program and the implementation of that UVLS equipment maintenance and testing program as specified in Reliability Standard PRC-011-0_R2.

D. Compliance

1. Compliance Monitoring Process

1.1. Compliance Monitoring Responsibility

Compliance Monitor: Regional Reliability Organization.

1.2. Compliance Monitoring Period and Reset Timeframe

On request (30 calendar days).

1.3. Data Retention

None specified.

1.4. Additional Compliance Information

None.

2. Levels of Non-Compliance

2.1. Level 1: Documentation of the maintenance and testing program was incomplete, but records indicate implementation was on schedule.

2.2. Level 2: Documentation of the maintenance and testing program was incomplete, but records indicate implementation was on schedule.

2.3. Level 3: Documentation of the maintenance and testing program was incomplete, and records indicate implementation was not on schedule.

2.4. Level 4: Documentation of the maintenance and testing program, or its implementation, was not provided.

E. Regional Differences

1. None identified.

Version History

Version	Date	Action	Change Tracking
0	April 1, 2005	Effective Date	New

A. Introduction

1. Title: **Special Protection System Maintenance and Testing**

2. Number: PRC-017-0

3. Purpose: To ensure that all Special Protection Systems (SPS) are properly designed, meet performance requirements, and are coordinated with other protection systems. To ensure that maintenance and testing programs are developed and misoperations are analyzed and corrected.

4. Applicability:

4.1. Transmission Owner that owns an SPS

4.2. Generator Owner that owns an SPS

4.3. Distribution Provider that owns an SPS

5. Effective Date: April 1, 2005

B. Requirements

R1. The Transmission Owner, Generator Owner, and Distribution Provider that owns an SPS shall have a system maintenance and testing program(s) in place. The program(s) shall include:

R1.1. SPS identification shall include but is not limited to:

R1.1.1. Relays.

R1.1.2. Instrument transformers.

R1.1.3. Communications systems, where appropriate.

R1.1.4. Batteries.

R1.2. Documentation of maintenance and testing intervals and their basis.

R1.3. Summary of testing procedure.

R1.4. Schedule for system testing.

R1.5. Schedule for system maintenance.

R1.6. Date last tested/maintained.

R2. The Transmission Owner, Generator Owner, and Distribution Provider that owns an SPS shall provide documentation of the program and its implementation to the appropriate Regional Reliability Organizations and NERC on request (within 30 calendar days).

C. Measures

M1. The Transmission Owner, Generator Owner, and Distribution Provider that owns an SPS shall have a system maintenance and testing program(s) in place that includes all items in Reliability Standard PRC-017-0_R1.

M2. The Transmission Owner, Generator Owner, and Distribution Provider that owns an SPS shall have evidence it provided documentation of the program and its implementation to the appropriate Regional Reliability Organizations and NERC on request (within 30 calendar days).

D. Compliance

1. Compliance Monitoring Process

1.1. Compliance Monitoring Responsibility

Compliance Monitor: Regional Reliability Organization. Each Region shall report compliance and violations to NERC via the NERC Compliance Reporting process.

Timeframe:
On request (30 calendar days.)

1.2. Compliance Monitoring Period and Reset Timeframe

Compliance Monitor: Regional Reliability Organization.

1.3. Data Retention

None specified.

1.4. Additional Compliance Information

None.

2. Levels of Non-Compliance

2.1. Level 1: Documentation of the maintenance and testing program was incomplete, but records indicate implementation was on schedule.

2.2. Level 2: Complete documentation of the maintenance and testing program was provided, but records indicate that implementation was not on schedule.

2.3. Level 3: Documentation of the maintenance and testing program was incomplete, and records indicate implementation was not on schedule.

2.4. Level 4: Documentation of the maintenance and testing program, or its implementation, was not provided.

E. Regional Differences

1. None identified.

Version History

Version	Date	Action	Change Tracking
0	April 1, 2005	Effective Date	New

NERC
NORTH AMERICAN ELECTRIC RELIABILITY CORPORATION

Standards Announcement

Project 2007-17 – Protection System Maintenance & Testing

Successive Ballot Window Open through 8 p.m. Wednesday, June 27, 2012

Now Available

A successive ballot for PRC-005-2 – Protection System Maintenance is open through **8 p.m. Eastern on Wednesday, June 27, 2012**.

Instructions

Members of the ballot pool associated with this project may log in and submit their vote for the Standard by clicking here.

Due to modifications to NERC's balloting software, voters will no longer be able to submit commits via the balloting software.

Next Steps

The drafting team will consider all comments received during the formal comment period and successive ballot and, if needed, make revisions to the standard. If the comments do not show the need for significant revisions, the standard will proceed to a recirculation ballot.

Background

The proposed PRC-005-2 – Protection System Maintenance standard addresses FERC directives from FERC Order 693, as well as issues identified by stakeholders. In accordance with the FERC directives, this draft standard establishes requirements for a time-based maintenance program, where all relevant devices are maintained according to prescribed maximum intervals. It further establishes requirements for a condition-based maintenance program, where the hands-on maintenance intervals are adjusted to reflect the known and reported condition of the relevant devices. For a performance-based maintenance program, it ascertains where the hands-on maintenance intervals are adjusted to reflect the historical performance of the relevant devices.

Documents for this project are posted on the project's webpage.

Standards Development Process

The Standards Processes Manual contains all the procedures governing the standards development process. The success of the NERC standards development process depends on stakeholder participation. We extend out thanks to all those who participate.

For more information or assistance, please contact Monica Benson, Standards Process Administrator, at monica.benson@nerc.net or at 404-446-2560.

North American Electric Reliability Corporation
3353 Peachtree Rd, NE
Suite 600, North Tower
Atlanta, GA 30326
404-446-2560 | www.nerc.com

NERC
NORTH AMERICAN ELECTRIC RELIABILITY CORPORATION

Standards Announcement

Project 2007-17 – Protection System Maintenance & Testing

Formal Comment Period Open: May 29 – June 27, 2012

Upcoming:
Successive Ballot June 18 – 27, 2012

Now Available

A formal comment period for PRC-005-2 – Protection System Maintenance is open through **8 p.m. Eastern on Wednesday, June 27, 2012**. Documents for this project are posted on the project's webpage.

The drafting team has made clarifying changes to definitions and the Applicability section of the standard, minor revisions to the VSLs, and changes to several Tables. Several activities within Table 1-4a, Table 1-4b, Table 1-4c, Table 1-4d, and Table 1-4f, relating to verification that the station battery can perform properly, were modified with the assistance of representatives of the IEEE Stationary Battery Committee. A copy of the letter and report these representatives sent to the team, and the drafting team's response have been posted on the project page. In addition, adjustments were made to *Table 1-2 Component Type: Communications Systems* in response to stakeholder comments.

Note that PRC-005-2 reflects the merging of the following standards into a single standard, making it impractical to post a redline of proposed PRC-005-2 that shows the changes to the last approved version of the standard:

- PRC-005-1 — Transmission and Generation Protection System Maintenance and Testing
- PRC-008-0 — Underfrequency Load Shedding Equipment Maintenance Program
- PRC-011-0 — UVLS System Maintenance and Testing
- PRC-017-0 — Special Protection System Maintenance and Testing

The last approved versions of PRC-005-1, PRC-008-0, PRC-011-0, and PRC-017-0 have been posted on the project's web page for easy reference.

The drafting team has also posted a draft SAR to address modifications to PRC-005-2 required by FERC in Order No. 758. In this order, FERC approved an interpretation of PRC-005-1 but directed further revisions to PRC-005 to address ""…maintenance and testing of reclosing relays that can affect the reliable operation of the Bulk-Power System, as discussed above, within these reinitiated efforts to revise Reliability Standard PRC-005." The team has proposed that this directive be addressed in a second phase of Project 2007-17, and the Standards Committee directed the drafting team to post the

draft SAR for information and defer activity in modifying PRC-005-2 to address the Order 758 directive until the current modifications to PRC-005-2 have completed recirculation ballot.

Instructions for Commenting

Please use this electronic form to submit comments. If you experience any difficulties in using the electronic form, please contact Monica Benson at monica.benson@nerc.net. An off-line, unofficial copy of the comment form is posted on the project page.

Commenters and voters must submit comments through the electronic comment form. Due to modifications to NERC's balloting software, voters are no longer able to submit comments via the balloting software.

Next Steps

A successive ballot of the standard will be conducted beginning on Monday, June 18, 2012 through 8 p.m. Eastern on Wednesday, June 27, 2012.

Background

The proposed PRC-005-2 – Protection System Maintenance standard addresses FERC directives from FERC Order 693, as well as issues identified by stakeholders. In accordance with the FERC directives, this draft standard establishes requirements for a time-based maintenance program, where all relevant devices are maintained according to prescribed maximum intervals. It further establishes requirements for a condition-based maintenance program, where the hands-on maintenance intervals are adjusted to reflect the known and reported condition of the relevant devices. For a performance-based maintenance program, it ascertains where the hands-on maintenance intervals are adjusted to reflect the historical performance of the relevant devices.

Standards Development Process

The Standards Processes Manual contains all the procedures governing the standards development process. The success of the NERC standards development process depends on stakeholder participation. We extend out thanks to all those who participate.

For more information or assistance, please contact Monica Benson, Standards Process Administrator, at monica.benson@nerc.net or at 404-446-2560.

North American Electric Reliability Corporation
3353 Peachtree Rd, NE
Suite 600, North Tower
Atlanta, GA 30326
404-446-2560 | www.nerc.com

NERC
NORTH AMERICAN ELECTRIC RELIABILITY CORPORATION

Standards Announcement

Project 2007-17 – Protection System Maintenance & Testing

Formal Comment Period Open: May 29 – June 27, 2012

Upcoming:
Successive Ballot June 18 – 27, 2012

Now Available

A formal comment period for PRC-005-2 – Protection System Maintenance is open through **8 p.m. Eastern on Wednesday, June 27, 2012**. Documents for this project are posted on the project's webpage.

The drafting team has made clarifying changes to definitions and the Applicability section of the standard, minor revisions to the VSLs, and changes to several Tables. Several activities within Table 1-4a, Table 1-4b, Table 1-4c, Table 1-4d, and Table 1-4f, relating to verification that the station battery can perform properly, were modified with the assistance of representatives of the IEEE Stationary Battery Committee. A copy of the letter and report these representatives sent to the team, and the drafting team's response have been posted on the project page. In addition, adjustments were made to *Table 1-2 Component Type: Communications Systems* in response to stakeholder comments.

Note that PRC-005-2 reflects the merging of the following standards into a single standard, making it impractical to post a redline of proposed PRC-005-2 that shows the changes to the last approved version of the standard:

- PRC-005-1 — Transmission and Generation Protection System Maintenance and Testing
- PRC-008-0 — Underfrequency Load Shedding Equipment Maintenance Program
- PRC-011-0 — UVLS System Maintenance and Testing
- PRC-017-0 — Special Protection System Maintenance and Testing

The last approved versions of PRC-005-1, PRC-008-0, PRC-011-0, and PRC-017-0 have been posted on the project's web page for easy reference.

The drafting team has also posted a draft SAR to address modifications to PRC-005-2 required by FERC in Order No. 758. In this order, FERC approved an interpretation of PRC-005-1 but directed further revisions to PRC-005 to address ""…maintenance and testing of reclosing relays that can affect the reliable operation of the Bulk-Power System, as discussed above, within these reinitiated efforts to revise Reliability Standard PRC-005." The team has proposed that this directive be addressed in a second phase of Project 2007-17, and the Standards Committee directed the drafting team to post the

draft SAR for information and defer activity in modifying PRC-005-2 to address the Order 758 directive until the current modifications to PRC-005-2 have completed recirculation ballot.

Instructions for Commenting

Please use this electronic form to submit comments. If you experience any difficulties in using the electronic form, please contact Monica Benson at monica.benson@nerc.net. An off-line, unofficial copy of the comment form is posted on the project page.

Commenters and voters must submit comments through the electronic comment form. Due to modifications to NERC's balloting software, voters are no longer able to submit comments via the balloting software.

Next Steps

A successive ballot of the standard will be conducted beginning on Monday, June 18, 2012 through 8 p.m. Eastern on Wednesday, June 27, 2012.

Background

The proposed PRC-005-2 – Protection System Maintenance standard addresses FERC directives from FERC Order 693, as well as issues identified by stakeholders. In accordance with the FERC directives, this draft standard establishes requirements for a time-based maintenance program, where all relevant devices are maintained according to prescribed maximum intervals. It further establishes requirements for a condition-based maintenance program, where the hands-on maintenance intervals are adjusted to reflect the known and reported condition of the relevant devices. For a performance-based maintenance program, it ascertains where the hands-on maintenance intervals are adjusted to reflect the historical performance of the relevant devices.

Standards Development Process

The Standards Processes Manual contains all the procedures governing the standards development process. The success of the NERC standards development process depends on stakeholder participation. We extend out thanks to all those who participate.

For more information or assistance, please contact Monica Benson, Standards Process Administrator, at monica.benson@nerc.net or at 404-446-2560.

North American Electric Reliability Corporation
3353 Peachtree Rd, NE
Suite 600, North Tower
Atlanta, GA 30326
404-446-2560 | www.nerc.com

NERC
NORTH AMERICAN ELECTRIC RELIABILITY CORPORATION

Standards Announcement

Project 2007-17 – Protection System Maintenance & Testing

Successive Ballot Results

Now Available

A successive ballot of PRC-005-2 – Protection System Maintenance concluded Wednesday, June 27, 2012.

Voting statistics for each ballot are listed below, and the Ballots Results page provides a link to the detailed results.

Approval	Non-binding Poll Results
Quorum: 79.46% Approval: 79.00%	Quorum: 75.00% Supportive Opinions: 70.21%

Next Steps

The drafting team is considering all comments submitted, and based on the comments will determine whether to make additional changes. If the drafting team determines that no substantive changes to the standard are required, the team will submit the standard and implementation plan for a recirculation ballot. If the drafting team makes substantive changes to the standard, the team will submit it consideration of comments, along with the revised standard and implementation plan, for a quality review prior to posting for another successive ballot.

Background

The proposed PRC-005-2 – Protection System Maintenance standard addresses FERC directives from FERC Order 693, as well as issues identified by stakeholders. In accordance with the FERC directives, this draft standard establishes requirements for a time-based maintenance program, where all relevant devices are maintained according to prescribed maximum intervals. It further establishes requirements for a condition-based maintenance program, where the hands-on maintenance intervals are adjusted to reflect the known and reported condition of the relevant devices. For a performance-based maintenance program, it ascertains where the hands-on maintenance intervals are adjusted to reflect the historical performance of the relevant devices.

Additional information is available on the project page.

Standards Development Process

The Standards Processes Manual contains all the procedures governing the standards development process. The success of the NERC standards development process depends on stakeholder participation. We extend our thanks to all those who participate.

NERC
NORTH AMERICAN ELECTRIC RELIABILITY CORPORATION

Newsroom • Site Map • Contact NERC

SEARCH NERC.com

Advanced Search GO

About NERC | Standards | Compliance | Assessments & Trends | Events Analysis | Programs

User Name

Password

Log in

Register

-Ballot Pools
-Current Ballots
-Ballot Results
-Registered Ballot Body
-Proxy Voters

Home Page

Ballot Results

Ballot Name:	Project 2007-17 Successive Ballot
Ballot Period:	6/18/2012 - 6/27/2012
Ballot Type:	Initial
Total # Votes:	294
Total Ballot Pool:	370
Quorum:	**79.46 % The Quorum has been reached**
Weighted Segment Vote:	79.00 %
Ballot Results:	**The drafting team will be considering comments.**

Summary of Ballot Results

Segment	Ballot Pool	Segment Weight	Affirmative # Votes	Affirmative Fraction	Negative # Votes	Negative Fraction	Abstain # Votes	No Vote
1 - Segment 1.	90	1	51	0.761	16	0.239	5	18
2 - Segment 2.	6	0.4	4	0.4	0	0	1	1
3 - Segment 3.	98	1	44	0.733	16	0.267	17	21
4 - Segment 4.	30	1	15	0.714	6	0.286	1	8
5 - Segment 5.	80	1	36	0.655	19	0.345	6	19
6 - Segment 6.	47	1	27	0.73	10	0.27	4	6
7 - Segment 7.	0	0	0	0	0	0	0	0
8 - Segment 8.	11	0.7	7	0.7	0	0	2	2
9 - Segment 9.	2	0.2	2	0.2	0	0	0	0
10 - Segment 10.	6	0.4	4	0.4	0	0	1	1
Totals	**370**	**6.7**	**190**	**5.293**	**67**	**1.407**	**37**	**76**

Individual Ballot Pool Results

Segment	Organization	Member	Ballot	Comments
1	Ameren Services	Kirit Shah	Affirmative	
1	American Electric Power	Paul B. Johnson	Affirmative	
1	American Transmission Company, LLC	Andrew Z Pusztai	Negative	
1	Arizona Public Service Co.	Robert Smith	Negative	
1	Associated Electric Cooperative, Inc.	John Bussman	Affirmative	
1	Austin Energy	James Armke	Affirmative	
1	Balancing Authority of Northern California	Kevin Smith	Affirmative	
1	Baltimore Gas & Electric Company	Gregory S Miller	Negative	

1	BC Hydro and Power Authority	Patricia Robertson	Abstain	
1	Beaches Energy Services	Joseph S Stonecipher	Negative	
1	Black Hills Corp	Eric Egge		
1	Bonneville Power Administration	Donald S. Watkins	Negative	
1	Brazos Electric Power Cooperative, Inc.	Tony Kroskey	Affirmative	
1	CenterPoint Energy Houston Electric	Dale Bodden		
1	Central Maine Power Company	Kevin L Howes		
1	City of Tacoma, Department of Public Utilities, Light Division, dba Tacoma Power	Chang G Choi	Affirmative	
1	City Utilities of Springfield, Missouri	Jeff Knottek	Affirmative	
1	Cleco Power LLC	Danny McDaniel	Negative	
1	Colorado Springs Utilities	Paul Morland	Negative	
1	Consolidated Edison Co. of New York	Christopher L de Graffenried	Affirmative	
1	Consumers Power Inc.	Stuart Sloan	Abstain	
1	CPS Energy	Richard Castrejana	Affirmative	
1	Dairyland Power Coop.	Robert W. Roddy	Affirmative	
1	Dayton Power & Light Co.	Hertzel Shamash		
1	Dominion Virginia Power	Michael S Crowley		
1	Entergy Services, Inc.	Edward J Davis	Affirmative	
1	FirstEnergy Corp.	William J Smith	Affirmative	
1	Florida Keys Electric Cooperative Assoc.	Dennis Minton	Negative	
1	Gainesville Regional Utilities	Luther E. Fair		
1	Georgia Transmission Corporation	Harold Taylor	Affirmative	
1	Great River Energy	Gordon Pietsch	Affirmative	
1	Hoosier Energy Rural Electric Cooperative, Inc.	Bob Solomon		
1	Hydro One Networks, Inc.	Ajay Garg	Negative	
1	Hydro-Quebec TransEnergie	Bernard Pelletier	Affirmative	
1	Idaho Power Company	Ronald D Schellberg		
1	Imperial Irrigation District	Tino Zaragoza	Negative	
1	International Transmission Company Holdings Corp	Michael Moltane	Affirmative	
1	Kansas City Power & Light Co.	Michael Gammon	Affirmative	
1	Lee County Electric Cooperative	John W Delucca	Negative	
1	Lincoln Electric System	Doug Bantam		
1	Long Island Power Authority	Robert Ganley		
1	Los Angeles Department of Water & Power	Ly M Le		
1	Lower Colorado River Authority	Martyn Turner	Affirmative	
1	Manitoba Hydro	Joe D Petaski	Negative	
1	MEAG Power	Danny Dees	Affirmative	
1	MidAmerican Energy Co.	Terry Harbour	Affirmative	
1	Minnkota Power Coop. Inc.	Richard Burt		
1	Muscatine Power & Water	Tim Reed		
1	N.W. Electric Power Cooperative, Inc.	Mark Ramsey	Affirmative	
1	Nebraska Public Power District	Cole C Brodine	Negative	
1	New Brunswick Power Transmission Corporation	Randy MacDonald	Abstain	
1	Northeast Missouri Electric Power Cooperative	Kevin White	Affirmative	
1	Northeast Utilities	David Boguslawski	Affirmative	
1	Northern Indiana Public Service Co.	Kevin M Largura		
1	NorthWestern Energy	John Canavan	Abstain	
1	Ohio Valley Electric Corp.	Robert Mattey	Affirmative	
1	Omaha Public Power District	Doug Peterchuck	Affirmative	
1	Oncor Electric Delivery	Brenda Pulis	Affirmative	
1	Orlando Utilities Commission	Brad Chase	Affirmative	
1	Otter Tail Power Company	Daryl Hanson		
1	PacifiCorp	Colt Norrish		
1	PECO Energy	Ronald Schloendorn	Affirmative	
1	Platte River Power Authority	John C. Collins	Affirmative	
1	Portland General Electric Co.	John T Walker	Affirmative	
1	Potomac Electric Power Co.	David Thorne	Affirmative	
1	PPL Electric Utilities Corp.	Brenda L Truhe	Affirmative	
1	Progress Energy Carolinas	Brett A. Koelsch	Affirmative	
1	Public Service Company of New Mexico	Laurie Williams	Affirmative	
1	Public Service Electric and Gas Co.	Kenneth D. Brown	Affirmative	
1	Public Utility District No. 1 of Okanogan County	Dale Dunckel		
1	Puget Sound Energy, Inc.	Denise M Lietz	Affirmative	

1	Rochester Gas and Electric Corp.	John C. Allen	Affirmative	
1	Sacramento Municipal Utility District	Tim Kelley	Affirmative	
1	Salt River Project	Robert Kondziolka	Affirmative	
1	Santee Cooper	Terry L Blackwell	Abstain	
1	Seattle City Light	Pawel Krupa	Negative	
1	Sho-Me Power Electric Cooperative	Denise Stevens	Affirmative	
1	Sierra Pacific Power Co.	Rich Salgo	Affirmative	
1	Snohomish County PUD No. 1	Long T Duong	Affirmative	
1	South California Edison Company	Steven Mavis	Affirmative	
1	Southern Company Services, Inc.	Robert A. Schaffeld	Affirmative	
1	Southwest Transmission Cooperative, Inc.	James Jones	Affirmative	
1	Sunflower Electric Power Corporation	Noman Lee Williams		
1	Tennessee Valley Authority	Larry Akens	Negative	
1	Tri-State G & T Association, Inc.	Tracy Sliman	Affirmative	
1	United Illuminating Co.	Jonathan Appelbaum	Affirmative	
1	Westar Energy	Allen Klassen	Affirmative	
1	Western Area Power Administration	Brandy A Dunn	Negative	
1	Western Farmers Electric Coop.	Forrest Brock	Affirmative	
1	Xcel Energy, Inc.	Gregory L Pieper	Affirmative	
2	Alberta Electric System Operator	Mark B Thompson	Affirmative	
2	BC Hydro	Venkataramakrishnan Vinnakota	Affirmative	
2	Independent Electricity System Operator	Barbara Constantinescu	Affirmative	
2	Midwest ISO, Inc.	Marie Knox	Abstain	
2	New Brunswick System Operator	Alden Briggs	Affirmative	
2	PJM Interconnection, L.L.C.	Tom Bowe		
3	AEP	Michael E Deloach	Affirmative	
3	Alabama Power Company	Richard J. Mandes	Affirmative	
3	Ameren Services	Mark Peters	Affirmative	
3	APS	Steven Norris	Affirmative	
3	Arkansas Electric Cooperative Corporation	Philip Huff		
3	Atlantic City Electric Company	NICOLE BUCKMAN	Affirmative	
3	BC Hydro and Power Authority	Pat G. Harrington	Abstain	
3	Blachly-Lane Electric Co-op	Bud Tracy	Abstain	
3	Bonneville Power Administration	Rebecca Berdahl	Negative	
3	Central Electric Cooperative, Inc. (Redmond, Oregon)	Dave Markham	Abstain	
3	Central Electric Power Cooperative	Ralph J Schulte		
3	Central Lincoln PUD	Steve Alexanderson	Affirmative	
3	City of Austin dba Austin Energy	Andrew Gallo	Affirmative	
3	City of Clewiston	Lynne Mila		
3	City of Farmington	Linda R Jacobson	Affirmative	
3	City of Garland	Ronnie C Hoeinghaus	Abstain	
3	City of Green Cove Springs	Gregg R Griffin	Negative	
3	City of Redding	Bill Hughes	Affirmative	
3	Clearwater Power Co.	Dave Hagen	Abstain	
3	Cleco Corporation	Michelle A Corley	Negative	
3	Colorado Springs Utilities	Lisa Cleary		
3	ComEd	Bruce Krawczyk	Affirmative	
3	Consolidated Edison Co. of New York	Peter T Yost	Affirmative	
3	Constellation Energy	CJ Ingersoll	Abstain	
3	Consumers Energy	Richard Blumenstock	Affirmative	
3	Consumers Power Inc.	Roman Gillen	Abstain	
3	Coos-Curry Electric Cooperative, Inc	Roger Meader	Abstain	
3	Cowlitz County PUD	Russell A Noble		
3	CPS Energy	Jose Escamilla	Affirmative	
3	Delmarva Power & Light Co.	Michael R. Mayer		
3	Dominion Resources Services	Michael F. Gildea	Affirmative	
3	Douglas Electric Cooperative	Dave Sabala		
3	Duke Energy Carolina	Henry Ernst-Jr	Negative	
3	Fall River Rural Electric Cooperative	Bryan Case	Abstain	
3	FirstEnergy Energy Delivery	Stephan Kern	Affirmative	
3	Flathead Electric Cooperative	John M Goroski	Affirmative	
3	Florida Municipal Power Agency	Joe McKinney	Negative	
3	Florida Power Corporation	Lee Schuster	Affirmative	
3	Gainesville Regional Utilities	Kenneth Simmons	Negative	
3	Georgia Power Company	Anthony L Wilson	Affirmative	

3	Georgia Systems Operations Corporation	William N. Phinney	Affirmative	
3	Great River Energy	Sam Kokkinen	Affirmative	
3	Gulf Power Company	Paul C Caldwell	Affirmative	
3	Hydro One Networks, Inc.	David Kiguel	Negative	
3	Imperial Irrigation District	Jesus S. Alcaraz	Negative	
3	JEA	Garry Baker	Negative	
3	Kansas City Power & Light Co.	Charles Locke		
3	Kissimmee Utility Authority	Gregory D Woessner	Affirmative	
3	Lakeland Electric	Mace D Hunter		
3	Lane Electric Cooperative, Inc.	Rick Crinklaw	Abstain	
3	Lincoln Electric Cooperative, Inc.	Michael Henry		
3	Lincoln Electric System	Jason Fortik		
3	Lost River Electric Cooperative	Richard Reynolds		
3	Louisville Gas and Electric Co.	Charles A. Freibert	Affirmative	
3	M & A Electric Power Cooperative	Stephen D Pogue	Affirmative	
3	Manitoba Hydro	Greg C. Parent	Negative	
3	Manitowoc Public Utilities	Thomas E Reed		
3	MidAmerican Energy Co.	Thomas C. Mielnik	Affirmative	
3	Mississippi Power	Jeff Franklin	Affirmative	
3	Modesto Irrigation District	Jack W Savage	Affirmative	
3	Municipal Electric Authority of Georgia	Steven M. Jackson		
3	Muscatine Power & Water	John S Bos	Affirmative	
3	Nebraska Public Power District	Tony Eddleman	Negative	
3	New York Power Authority	Marilyn Brown	Affirmative	
3	Niagara Mohawk (National Grid Company)	Michael Schiavone	Affirmative	
3	Northeast Missouri Electric Power Cooperative	Skyler Wiegmann	Affirmative	
3	Northern Indiana Public Service Co.	William SeDoris	Affirmative	
3	Northern Lights Inc.	Jon Shelby	Abstain	
3	Okanogan County Electric Cooperative, Inc.	Ray Ellis		
3	Orange and Rockland Utilities, Inc.	David Burke	Affirmative	
3	Orlando Utilities Commission	Ballard K Mutters	Affirmative	
3	Owensboro Municipal Utilities	Thomas T Lyons	Negative	
3	Pacific Gas and Electric Company	John H Hagen	Affirmative	
3	Platte River Power Authority	Terry L Baker	Affirmative	
3	Potomac Electric Power Co.	Robert Reuter		
3	Progress Energy Carolinas	Sam Waters	Affirmative	
3	Public Service Electric and Gas Co.	Jeffrey Mueller	Affirmative	
3	Public Utility District No. 1 of Clallam County	David Proebstel	Abstain	
3	Public Utility District No. 2 of Grant County	Greg Lange		
3	Puget Sound Energy, Inc.	Erin Apperson		
3	Raft River Rural Electric Cooperative	Heber Carpenter	Abstain	
3	Rayburn Country Electric Coop., Inc.	Eddy Reece		
3	Rutherford EMC	Thomas M Haire	Affirmative	
3	Sacramento Municipal Utility District	James Leigh-Kendall	Affirmative	
3	Salmon River Electric Cooperative	Ken Dizes		
3	Salt River Project	John T. Underhill	Affirmative	
3	Santee Cooper	James M Poston	Abstain	
3	Seattle City Light	Dana Wheelock	Negative	
3	Seminole Electric Cooperative, Inc.	James R Frauen	Negative	
3	South Carolina Electric & Gas Co.	Hubert C Young	Abstain	
3	South Mississippi Electric Power Association	Gary Hutson		
3	Tacoma Public Utilities	Travis Metcalfe	Affirmative	
3	Tampa Electric Co.	Ronald L. Donahey	Negative	
3	Tennessee Valley Authority	Ian S Grant	Negative	
3	Umatilla Electric Cooperative	Steve Eldrige	Abstain	
3	West Oregon Electric Cooperative, Inc.	Marc M Farmer	Abstain	
3	Wisconsin Electric Power Marketing	James R Keller	Affirmative	
3	Xcel Energy, Inc.	Michael Ibold	Affirmative	
4	Alliant Energy Corp. Services, Inc.	Kenneth Goldsmith	Affirmative	
4	American Public Power Association	Allen Mosher	Affirmative	
4	Central Lincoln PUD	Shamus J Gamache		
4	City of Austin dba Austin Energy	Reza Ebrahimian	Affirmative	
4	City of Clewiston	Kevin McCarthy		
4	City of New Smyrna Beach Utilities Commission	Tim Beyrle		
4	City of Redding	Nicholas Zettel	Affirmative	
4	City Utilities of Springfield, Missouri	John Allen	Affirmative	

4	Consumers Energy	David Frank Ronk	Negative	
4	Cowlitz County PUD	Rick Syring		
4	Flathead Electric Cooperative	Russ Schneider	Affirmative	
4	Florida Municipal Power Agency	Frank Gaffney	Negative	
4	Fort Pierce Utilities Authority	Thomas Richards		
4	Georgia System Operations Corporation	Guy Andrews	Affirmative	
4	Illinois Municipal Electric Agency	Bob C. Thomas	Negative	
4	Imperial Irrigation District	Diana U Torres	Negative	
4	Indiana Municipal Power Agency	Jack Alvey		
4	Madison Gas and Electric Co.	Joseph DePoorter	Affirmative	
4	Modesto Irrigation District	Spencer Tacke	Affirmative	
4	Northern California Power Agency	Tracy R Bibb		
4	Ohio Edison Company	Douglas Hohlbaugh	Affirmative	
4	Pacific Northwest Generating Cooperative	Aleka K Scott	Abstain	
4	Public Utility District No. 1 of Douglas County	Henry E. LuBean	Affirmative	
4	Public Utility District No. 1 of Snohomish County	John D Martinsen	Affirmative	
4	Sacramento Municipal Utility District	Mike Ramirez	Affirmative	
4	Seattle City Light	Hao Li	Negative	
4	Seminole Electric Cooperative, Inc.	Steven R Wallace	Negative	
4	South Mississippi Electric Power Association	Steven McElhaney		
4	Tacoma Public Utilities	Keith Morisette	Affirmative	
4	Wisconsin Energy Corp.	Anthony Jankowski	Affirmative	
5	AEP Service Corp.	Brock Ondayko		
5	AES Corporation	Leo Bernier	Affirmative	
5	Amerenue	Sam Dwyer	Affirmative	
5	Arizona Public Service Co.	Edward Cambridge	Negative	
5	BC Hydro and Power Authority	Clement Ma	Abstain	
5	Boise-Kuna Irrigation District/dba Lucky peak power plant project	Mike D Kukla	Negative	
5	Bonneville Power Administration	Francis J. Halpin	Negative	
5	City and County of San Francisco	Daniel Mason	Affirmative	
5	City of Austin dba Austin Energy	Jeanie Doty	Affirmative	
5	City of Grand Island	Jeff Mead	Abstain	
5	City of Redding	Paul A. Cummings	Affirmative	
5	City of Tacoma, Department of Public Utilities, Light Division, dba Tacoma Power	Max Emrick		
5	Cleco Power	Stephanie Huffman	Negative	
5	Cogentrix Energy, Inc.	Mike D Hirst	Affirmative	
5	Colorado Springs Utilities	Jennifer Eckels	Negative	
5	Consolidated Edison Co. of New York	Wilket (Jack) Ng	Affirmative	
5	Constellation Power Source Generation, Inc.	Amir Y Hammad	Abstain	
5	Cowlitz County PUD	Bob Essex		
5	CPS Energy	Robert Stevens		
5	Detroit Edison Company	Christy Wicke	Negative	
5	Dominion Resources, Inc.	Mike Garton	Affirmative	
5	Duke Energy	Dale Q Goodwine	Negative	
5	Dynegy Inc.	Dan Roethemeyer	Affirmative	
5	East Kentucky Power Coop.	Stephen Ricker	Affirmative	
5	Exelon Nuclear	Michael Korchynsky	Affirmative	
5	ExxonMobil Research and Engineering	Martin Kaufman		
5	FirstEnergy Solutions	Kenneth Dresner		
5	Florida Municipal Power Agency	David Schumann	Negative	
5	Great River Energy	Preston L Walsh	Affirmative	
5	Green Country Energy	Greg Froehling		
5	Imperial Irrigation District	Marcela Y Caballero	Negative	
5	Invenergy LLC	Alan Beckham		
5	JEA	John J Babik	Negative	
5	Kissimmee Utility Authority	Mike Blough	Negative	
5	Lakeland Electric	James M Howard		
5	Liberty Electric Power LLC	Daniel Duff	Affirmative	
5	Lincoln Electric System	Dennis Florom	Affirmative	
5	Los Angeles Department of Water & Power	Kenneth Silver	Affirmative	
5	Lower Colorado River Authority	Tom Foreman	Affirmative	
5	Luminant Generation Company LLC	Mike Laney	Negative	
5	Manitoba Hydro	S N Fernando	Negative	
5	Massachusetts Municipal Wholesale Electric Company	David Gordon	Abstain	

5	MEAG Power	Steven Grego		
5	MidAmerican Energy Co.	Christopher Schneider	Affirmative	
5	Muscatine Power & Water	Mike Avesing	Affirmative	
5	Nebraska Public Power District	Don Schmit	Negative	
5	New Harquahala Generating Co. LLC	Nathaniel Larson		
5	New York Power Authority	Gerald Mannarino	Affirmative	
5	North Carolina Electric Membership Corp.	Jeffrey S Brame	Affirmative	
5	Northern Indiana Public Service Co.	William O. Thompson		
5	Occidental Chemical	Michelle R DAntuono	Negative	
5	Oklahoma Gas and Electric Co.	Kim Morphis		
5	Omaha Public Power District	Mahmood Z. Safi	Affirmative	
5	Orlando Utilities Commission	Richard Kinas		
5	Pacific Gas and Electric Company	Richard J. Padilla	Affirmative	
5	PacifiCorp	Sandra L. Shaffer	Affirmative	
5	Platte River Power Authority	Roland Thiel	Affirmative	
5	Portland General Electric Co.	Gary L Tingley	Affirmative	
5	PPL Generation LLC	Annette M Bannon	Affirmative	
5	Progress Energy Carolinas	Wayne Lewis	Affirmative	
5	Proven Compliance Solutions	Mitchell E Needham		
5	PSEG Fossil LLC	Mikhail Falkovich	Affirmative	
5	Puget Sound Energy, Inc.	Tom Flynn	Affirmative	
5	Sacramento Municipal Utility District	Bethany Hunter	Affirmative	
5	Salt River Project	Glen Reeves	Affirmative	
5	Santee Cooper	Lewis P Pierce	Abstain	
5	Seattle City Light	Michael J. Haynes	Negative	
5	Seminole Electric Cooperative, Inc.	Brenda K. Atkins		
5	Snohomish County PUD No. 1	Sam Nietfeld	Affirmative	
5	South Mississippi Electric Power Association	Jerry W Johnson		
5	Southern Company Generation	William D Shultz	Affirmative	
5	Tampa Electric Co.	RJames Rocha	Negative	
5	Tenaska, Inc.	Scott M. Helyer	Abstain	
5	Tennessee Valley Authority	David Thompson	Negative	
5	Tri-State G & T Association, Inc.	Barry Ingold	Affirmative	
5	U.S. Army Corps of Engineers	Melissa Kurtz	Affirmative	
5	U.S. Bureau of Reclamation	Martin Bauer	Negative	
5	Westar Energy	Bo Jones		
5	Western Farmers Electric Coop.	Caleb J Muckala		
5	Wisconsin Electric Power Co.	Linda Horn	Affirmative	
6	AEP Marketing	Edward P. Cox	Affirmative	
6	APS	Randy A. Young	Negative	
6	Associated Electric Cooperative, Inc.	Brian Ackermann	Affirmative	
6	Bonneville Power Administration	Brenda S. Anderson	Negative	
6	City of Austin dba Austin Energy	Lisa L Martin	Affirmative	
6	City of Redding	Marvin Briggs	Affirmative	
6	Cleco Power LLC	Robert Hirchak	Negative	
6	Colorado Springs Utilities	Lisa C Rosintoski	Negative	
6	Consolidated Edison Co. of New York	Nickesha P Carrol	Affirmative	
6	Constellation Energy Commodities Group	Brenda L Powell	Affirmative	
6	Dominion Resources, Inc.	Louis S. Slade	Affirmative	
6	Duke Energy Carolina	Walter Yeager		
6	Exelon Power Team	Pulin Shah		
6	FirstEnergy Solutions	Kevin Querry	Affirmative	
6	Florida Municipal Power Agency	Richard L. Montgomery	Negative	
6	Florida Municipal Power Pool	Thomas Washburn		
6	Florida Power & Light Co.	Silvia P. Mitchell	Affirmative	
6	Great River Energy	Donna Stephenson		
6	Imperial Irrigation District	Cathy Bretz	Negative	
6	Kansas City Power & Light Co.	Jessica L Klinghoffer	Affirmative	
6	Lakeland Electric	Paul Shipps	Abstain	
6	Lincoln Electric System	Eric Ruskamp	Affirmative	
6	Manitoba Hydro	Daniel Prowse	Negative	
6	MidAmerican Energy Co.	Dennis Kimm	Affirmative	
6	Muscatine Power & Water	John Stolley	Affirmative	
6	New York Power Authority	William Palazzo	Affirmative	
6	Northern Indiana Public Service Co.	Joseph O'Brien	Affirmative	
6	NRG Energy, Inc.	Alan Johnson	Abstain	
6	Omaha Public Power District	David Ried	Affirmative	

6	PacifiCorp	Scott L Smith	Affirmative	
6	Platte River Power Authority	Carol Ballantine	Affirmative	
6	PPL EnergyPlus LLC	Mark A Heimbach	Affirmative	
6	Progress Energy	John T Sturgeon	Affirmative	
6	PSEG Energy Resources & Trade LLC	Peter Dolan	Affirmative	
6	Public Utility District No. 1 of Chelan County	Hugh A. Owen	Abstain	
6	Sacramento Municipal Utility District	Claire Warshaw	Affirmative	
6	Salt River Project	Steven J Hulet	Affirmative	
6	Santee Cooper	Michael Brown	Abstain	
6	Seattle City Light	Dennis Sismaet	Negative	
6	Seminole Electric Cooperative, Inc.	Trudy S. Novak		
6	Snohomish County PUD No. 1	William T Moojen	Affirmative	
6	South California Edison Company	Lujuanna Medina	Affirmative	
6	Southern Company Generation and Energy Marketing	John J. Ciza	Affirmative	
6	Tacoma Public Utilities	Michael C Hill	Affirmative	
6	Tampa Electric Co.	Benjamin F Smith II	Negative	
6	Tennessee Valley Authority	Marjorie S. Parsons	Negative	
6	Xcel Energy, Inc.	David F. Lemmons		
8		Edward C Stein		
8		Kristina M. Loudermilk		
8		Merle Ashton	Affirmative	
8		Roger C Zaklukiewicz	Affirmative	
8		James A Maenner	Affirmative	
8	INTELLIBIND	Kevin Conway	Affirmative	
8	JDRJC Associates	Jim Cyrulewski	Affirmative	
8	Pacific Northwest Generating Cooperative	Margaret Ryan	Abstain	
8	Transmission Strategies, LLC	Bernie M Pasternack	Abstain	
8	Utility Services, Inc.	Brian Evans-Mongeon	Affirmative	
8	Volkmann Consulting, Inc.	Terry Volkmann	Affirmative	
9	Commonwealth of Massachusetts Department of Public Utilities	Donald Nelson	Affirmative	
9	National Association of Regulatory Utility Commissioners	Diane J. Barney	Affirmative	
10	New York State Reliability Council	Alan Adamson	Affirmative	
10	Northeast Power Coordinating Council	Guy V. Zito	Affirmative	
10	ReliabilityFirst Corporation	Anthony E Jablonski	Abstain	
10	SERC Reliability Corporation	Carter B. Edge		
10	Texas Reliability Entity, Inc.	Donald G Jones	Affirmative	
10	Western Electricity Coordinating Council	Steven L. Rueckert	Affirmative	

Legal and Privacy
404.446.2560 voice : 404.446.2595 fax
Atlanta Office: 3353 Peachtree Road, N.E. : Suite 600, North Tower : Atlanta, GA 30326
Washington Office: 1325 G Street, N.W. : Suite 600 : Washington, DC 20005-3801

Account Log-In/Register

Copyright © 2012 by the North American Electric Reliability Corporation. : All rights reserved.
A New Jersey Nonprofit Corporation

Non-binding Poll Results

Project 2007-17

Non-binding Poll Results	
Non-binding Poll Name:	Project 2007-17 Non-binding Poll
Poll Period:	6/18/2012 - 6/27/2012
Total # Opinions:	249
Total Ballot Pool:	332
Summary Results:	75% of those who registered to participate provided an opinion or an abstention; 70.21% of those who provided an opinion indicated support for the VRFs and VSLs.

Individual Ballot Pool Results

Segment	Organization	Member	Opinions	Comments
1	Ameren Services	Kirit Shah	Negative	
1	American Electric Power	Paul B. Johnson	Abstain	
1	American Transmission Company, LLC	Andrew Z Pusztai	Abstain	
1	Arizona Public Service Co.	Robert Smith	Negative	
1	Associated Electric Cooperative, Inc.	John Bussman	Affirmative	
1	Austin Energy	James Armke	Affirmative	
1	Balancing Authority of Northern California	Kevin Smith	Affirmative	
1	Baltimore Gas & Electric Company	Gregory S Miller	Abstain	
1	BC Hydro and Power Authority	Patricia Robertson	Abstain	
1	Beaches Energy Services	Joseph S Stonecipher	Negative	
1	Bonneville Power Administration	Donald S. Watkins	Negative	
1	Brazos Electric Power Cooperative, Inc.	Tony Kroskey	Negative	
1	CenterPoint Energy Houston Electric	Dale Bodden		
1	Central Maine Power Company	Kevin L Howes		
1	City of Tacoma, Department of Public Utilities, Light Division, dba Tacoma Power	Chang G Choi	Affirmative	
1	Cleco Power LLC	Danny McDaniel		
1	Colorado Springs Utilities	Paul Morland	Negative	
1	Consolidated Edison Co. of New York	Christopher L de Graffenried	Abstain	
1	CPS Energy	Richard Castrejana	Affirmative	
1	Dairyland Power Coop.	Robert W. Roddy	Affirmative	
1	Dayton Power & Light Co.	Hertzel Shamash		
1	Dominion Virginia Power	Michael S Crowley		
1	Entergy Services, Inc.	Edward J Davis	Affirmative	
1	FirstEnergy Corp.	William J Smith	Affirmative	
1	Florida Keys Electric Cooperative Assoc.	Dennis Minton	Negative	
1	Gainesville Regional Utilities	Luther E. Fair		
1	Georgia Transmission Corporation	Harold Taylor		
1	Great River Energy	Gordon Pietsch	Affirmative	

1	Hoosier Energy Rural Electric Cooperative, Inc.	Bob Solomon		
1	Hydro One Networks, Inc.	Ajay Garg	Abstain	
1	Hydro-Quebec TransEnergie	Bernard Pelletier	Affirmative	
1	Idaho Power Company	Ronald D. Schellberg		
1	Imperial Irrigation District	Tino Zaragoza	Affirmative	
1	International Transmission Company Holdings Corp	Michael Moltane	Abstain	
1	Kansas City Power & Light Co.	Michael Gammon	Affirmative	
1	Lee County Electric Cooperative	John W Delucca	Negative	
1	Lincoln Electric System	Doug Bantam		
1	Long Island Power Authority	Robert Ganley		
1	Los Angeles Department of Water & Power	Ly M Le		
1	Lower Colorado River Authority	Martyn Turner	Affirmative	
1	Manitoba Hydro	Joe D Petaski	Affirmative	
1	MEAG Power	Danny Dees	Affirmative	
1	MidAmerican Energy Co.	Terry Harbour	Affirmative	
1	Minnkota Power Coop. Inc.	Richard Burt		
1	N.W. Electric Power Cooperative, Inc.	Mark Ramsey	Affirmative	
1	Nebraska Public Power District	Cole C Brodine	Negative	
1	New Brunswick Power Transmission Corporation	Randy MacDonald	Abstain	
1	Northeast Utilities	David Boguslawski	Affirmative	
1	Northern Indiana Public Service Co.	Kevin M Largura		
1	NorthWestern Energy	John Canavan	Abstain	
1	Ohio Valley Electric Corp.	Robert Mattey	Abstain	
1	Omaha Public Power District	Doug Peterchuck	Affirmative	
1	Oncor Electric Delivery	Brenda Pulis	Affirmative	
1	Orlando Utilities Commission	Brad Chase	Affirmative	
1	Otter Tail Power Company	Daryl Hanson		
1	PacifiCorp	Colt Norrish		
1	PECO Energy	Ronald Schloendorn	Affirmative	
1	Platte River Power Authority	John C. Collins	Affirmative	
1	Portland General Electric Co.	John T Walker	Affirmative	
1	Potomac Electric Power Co.	David Thorne	Abstain	
1	PPL Electric Utilities Corp.	Brenda L Truhe	Abstain	
1	Public Service Company of New Mexico	Laurie Williams	Affirmative	
1	Public Service Electric and Gas Co.	Kenneth D. Brown	Abstain	
1	Public Utility District No. 1 of Okanogan County	Dale Dunckel		
1	Puget Sound Energy, Inc.	Denise M Lietz	Affirmative	
1	Rochester Gas and Electric Corp.	John C. Allen	Affirmative	
1	Sacramento Municipal Utility District	Tim Kelley	Affirmative	
1	Salt River Project	Robert Kondziolka	Affirmative	
1	Santee Cooper	Terry L Blackwell	Abstain	
1	Seattle City Light	Pawel Krupa	Negative	
1	Sho-Me Power Electric Cooperative	Denise Stevens	Affirmative	
1	Sierra Pacific Power Co.	Rich Salgo	Abstain	
1	Snohomish County PUD No. 1	Long T Duong	Affirmative	

1	South California Edison Company	Steven Mavis	Affirmative	
1	Southern Company Services, Inc.	Robert A. Schaffeld	Affirmative	
1	Southwest Transmission Cooperative, Inc.	James Jones		
1	Sunflower Electric Power Corporation	Noman Lee Williams		
1	Tennessee Valley Authority	Larry Akens	Negative	
1	Tri-State G & T Association, Inc.	Tracy Sliman	Affirmative	
1	United Illuminating Co.	Jonathan Appelbaum	Abstain	
1	Westar Energy	Allen Klassen	Affirmative	
1	Western Area Power Administration	Brandy A Dunn	Negative	
1	Western Farmers Electric Coop.	Forrest Brock	Affirmative	
2	Alberta Electric System Operator	Mark B Thompson	Affirmative	
2	BC Hydro	Venkataramakrishnan Vinnakota	Abstain	
2	Independent Electricity System Operator	Barbara Constantinescu	Negative	
2	Midwest ISO, Inc.	Marie Knox	Abstain	
2	New Brunswick System Operator	Alden Briggs	Abstain	
2	PJM Interconnection, L.L.C.	Tom Bowe		
3	AEP	Michael E Deloach	Abstain	
3	Alabama Power Company	Richard J. Mandes	Affirmative	
3	Ameren Services	Mark Peters	Negative	
3	APS	Steven Norris	Affirmative	
3	Arkansas Electric Cooperative Corporation	Philip Huff		
3	Atlantic City Electric Company	NICOLE BUCKMAN		
3	BC Hydro and Power Authority	Pat G. Harrington	Abstain	
3	Bonneville Power Administration	Rebecca Berdahl	Negative	
3	Central Electric Power Cooperative	Ralph J Schulte		
3	Central Lincoln PUD	Steve Alexanderson	Abstain	
3	City of Austin dba Austin Energy	Andrew Gallo	Affirmative	
3	City of Clewiston	Lynne Mila		
3	City of Farmington	Linda R Jacobson	Affirmative	
3	City of Garland	Ronnie C Hoeinghaus	Abstain	
3	City of Green Cove Springs	Gregg R Griffin	Negative	
3	City of Redding	Bill Hughes	Affirmative	
3	Cleco Corporation	Michelle A Corley	Negative	
3	Colorado Springs Utilities	Lisa Cleary		
3	ComEd	Bruce Krawczyk	Affirmative	
3	Consolidated Edison Co. of New York	Peter T Yost	Abstain	
3	Constellation Energy	CJ Ingersoll	Abstain	
3	Consumers Energy	Richard Blumenstock	Affirmative	
3	Cowlitz County PUD	Russell A Noble		
3	CPS Energy	Jose Escamilla	Affirmative	
3	Duke Energy Carolina	Henry Ernst-Jr	Negative	
3	FirstEnergy Energy Delivery	Stephan Kern	Affirmative	
3	Flathead Electric Cooperative	John M Goroski	Affirmative	
3	Florida Municipal Power Agency	Joe McKinney	Negative	
3	Florida Power Corporation	Lee Schuster	Affirmative	
3	Gainesville Regional Utilities	Kenneth Simmons	Negative	

3	Georgia Power Company	Anthony L Wilson	Affirmative	
3	Georgia Systems Operations Corporation	William N. Phinney		
3	Great River Energy	Sam Kokkinen	Affirmative	
3	Gulf Power Company	Paul C Caldwell	Affirmative	
3	Hydro One Networks, Inc.	David Kiguel	Abstain	
3	Imperial Irrigation District	Jesus S. Alcaraz	Affirmative	
3	JEA	Garry Baker	Negative	
3	Kansas City Power & Light Co.	Charles Locke		
3	Kissimmee Utility Authority	Gregory D Woessner	Affirmative	
3	Lakeland Electric	Mace D Hunter		
3	Louisville Gas and Electric Co.	Charles A. Freibert		
3	Manitoba Hydro	Greg C. Parent	Affirmative	
3	Manitowoc Public Utilities	Thomas E Reed		
3	MidAmerican Energy Co.	Thomas C. Mielnik	Affirmative	
3	Mississippi Power	Jeff Franklin	Affirmative	
3	Modesto Irrigation District	Jack W Savage	Affirmative	
3	Municipal Electric Authority of Georgia	Steven M. Jackson		
3	Muscatine Power & Water	John S Bos	Affirmative	
3	Nebraska Public Power District	Tony Eddleman	Abstain	
3	New York Power Authority	Marilyn Brown		
3	Niagara Mohawk (National Grid Company)	Michael Schiavone	Affirmative	
3	Northeast Missouri Electric Power Cooperative	Skyler Wiegmann	Affirmative	
3	Northern Indiana Public Service Co.	William SeDoris	Affirmative	
3	Orange and Rockland Utilities, Inc.	David Burke	Affirmative	
3	Orlando Utilities Commission	Ballard K Mutters	Abstain	
3	Owensboro Municipal Utilities	Thomas T Lyons	Negative	
3	Pacific Gas and Electric Company	John H Hagen	Affirmative	
3	Platte River Power Authority	Terry L Baker	Affirmative	
3	Potomac Electric Power Co.	Robert Reuter		
3	Progress Energy Carolinas	Sam Waters	Affirmative	
3	Public Service Electric and Gas Co.	Jeffrey Mueller	Abstain	
3	Public Utility District No. 1 of Clallam County	David Proebstel	Abstain	
3	Public Utility District No. 2 of Grant County	Greg Lange		
3	Puget Sound Energy, Inc.	Erin Apperson		
3	Rayburn Country Electric Coop., Inc.	Eddy Reece		
3	Sacramento Municipal Utility District	James Leigh-Kendall	Affirmative	
3	Salt River Project	John T. Underhill	Affirmative	
3	Santee Cooper	James M Poston	Abstain	
3	Seattle City Light	Dana Wheelock	Negative	
3	Seminole Electric Cooperative, Inc.	James R Frauen	Negative	
3	South Carolina Electric & Gas Co.	Hubert C Young	Abstain	
3	Tacoma Public Utilities	Travis Metcalfe	Affirmative	
3	Tampa Electric Co.	Ronald L Donahey		
3	Tennessee Valley Authority	Ian S Grant	Negative	
3	Wisconsin Electric Power Marketing	James R Keller		

3	Xcel Energy, Inc.	Michael Ibold		
4	Alliant Energy Corp. Services, Inc.	Kenneth Goldsmith	Affirmative	
4	American Public Power Association	Allen Mosher	Abstain	
4	Central Lincoln PUD	Shamus J Gamache		
4	City of Austin dba Austin Energy	Reza Ebrahimian	Affirmative	
4	City of Clewiston	Kevin McCarthy		
4	City of New Smyrna Beach Utilities Commission	Tim Beyrle		
4	City of Redding	Nicholas Zettel	Affirmative	
4	City Utilities of Springfield, Missouri	John Allen	Affirmative	
4	Consumers Energy	David Frank Ronk	Negative	
4	Cowlitz County PUD	Rick Syring		
4	Flathead Electric Cooperative	Russ Schneider	Affirmative	
4	Florida Municipal Power Agency	Frank Gaffney	Negative	
4	Fort Pierce Utilities Authority	Thomas Richards		
4	Georgia System Operations Corporation	Guy Andrews	Affirmative	
4	Illinois Municipal Electric Agency	Bob C. Thomas	Abstain	
4	Imperial Irrigation District	Diana U Torres	Affirmative	
4	Indiana Municipal Power Agency	Jack Alvey		
4	Madison Gas and Electric Co.	Joseph DePoorter	Abstain	
4	Modesto Irrigation District	Spencer Tacke		
4	Northern California Power Agency	Tracy R Bibb		
4	Ohio Edison Company	Douglas Hohlbaugh	Affirmative	
4	Public Utility District No. 1 of Douglas County	Henry E. LuBean	Affirmative	
4	Public Utility District No. 1 of Snohomish County	John D Martinsen	Affirmative	
4	Sacramento Municipal Utility District	Mike Ramirez	Affirmative	
4	Seattle City Light	Hao Li	Negative	
4	Seminole Electric Cooperative, Inc.	Steven R Wallace	Negative	
4	South Mississippi Electric Power Association	Steven McElhaney		
4	Tacoma Public Utilities	Keith Morisette	Affirmative	
4	Wisconsin Energy Corp.	Anthony Jankowski	Affirmative	
5	AEP Service Corp.	Brock Ondayko		
5	AES Corporation	Leo Bernier	Affirmative	
5	Amerenue	Sam Dwyer	Negative	
5	Arizona Public Service Co.	Edward Cambridge		
5	BC Hydro and Power Authority	Clement Ma	Abstain	
5	Bonneville Power Administration	Francis J. Halpin	Negative	
5	City and County of San Francisco	Daniel Mason	Negative	
5	City of Austin dba Austin Energy	Jeanie Doty	Affirmative	
5	City of Grand Island	Jeff Mead	Abstain	
5	City of Redding	Paul A. Cummings	Affirmative	
5	City of Tacoma, Department of Public Utilities, Light Division, dba Tacoma Power	Max Emrick		
5	Cleco Power	Stephanie Huffman	Negative	
5	Cogentrix Energy, Inc.	Mike D Hirst	Affirmative	
5	Colorado Springs Utilities	Jennifer Eckels	Negative	

5	Consolidated Edison Co. of New York	Wilket (Jack) Ng	Abstain	
5	Constellation Power Source Generation, Inc.	Amir Y Hammad	Abstain	
5	Cowlitz County PUD	Bob Essex		
5	CPS Energy	Robert Stevens		
5	Detroit Edison Company	Christy Wicke	Negative	
5	Dominion Resources, Inc.	Mike Garton		
5	Duke Energy	Dale Q Goodwine	Negative	
5	Dynegy Inc.	Dan Roethemeyer	Affirmative	
5	Exelon Nuclear	Michael Korchynsky	Affirmative	
5	ExxonMobil Research and Engineering	Martin Kaufman		
5	FirstEnergy Solutions	Kenneth Dresner		
5	Florida Municipal Power Agency	David Schumann	Negative	
5	Great River Energy	Preston L Walsh	Affirmative	
5	Green Country Energy	Greg Froehling		
5	Imperial Irrigation District	Marcela Y Caballero	Affirmative	
5	JEA	John J Babik	Negative	
5	Kissimmee Utility Authority	Mike Blough	Negative	
5	Lakeland Electric	James M Howard		
5	Liberty Electric Power LLC	Daniel Duff	Negative	
5	Lincoln Electric System	Dennis Florom	Affirmative	
5	Los Angeles Department of Water & Power	Kenneth Silver	Affirmative	
5	Lower Colorado River Authority	Tom Foreman	Abstain	
5	Luminant Generation Company LLC	Mike Laney	Negative	
5	Manitoba Hydro	S N Fernando	Negative	
5	Massachusetts Municipal Wholesale Electric Company	David Gordon	Abstain	
5	MEAG Power	Steven Grego		
5	MidAmerican Energy Co.	Christopher Schneider	Affirmative	
5	Muscatine Power & Water	Mike Avesing	Affirmative	
5	Nebraska Public Power District	Don Schmit	Abstain	
5	New Harquahala Generating Co. LLC	Nathaniel Larson		
5	New York Power Authority	Gerald Mannarino		
5	North Carolina Electric Membership Corp.	Jeffrey S Brame	Negative	
5	Northern Indiana Public Service Co.	William O. Thompson		
5	Occidental Chemical	Michelle R DAntuono	Negative	
5	Oklahoma Gas and Electric Co.	Kim Morphis		
5	Omaha Public Power District	Mahmood Z. Safi	Affirmative	
5	Orlando Utilities Commission	Richard Kinas		
5	Pacific Gas and Electric Company	Richard J. Padilla	Affirmative	
5	PacifiCorp	Sandra L. Shaffer	Abstain	
5	Platte River Power Authority	Roland Thiel	Affirmative	
5	Portland General Electric Co.	Gary L Tingley		
5	PPL Generation LLC	Annette M Bannon	Affirmative	
5	Progress Energy Carolinas	Wayne Lewis	Affirmative	
5	Proven Compliance Solutions	Mitchell E Needham		
5	PSEG Fossil LLC	Mikhail Falkovich	Abstain	
5	Puget Sound Energy, Inc.	Tom Flynn	Affirmative	

5	Sacramento Municipal Utility District	Bethany Hunter	Affirmative	
5	Salt River Project	Glen Reeves		
5	Santee Cooper	Lewis P Pierce	Abstain	
5	Seattle City Light	Michael J. Haynes	Negative	
5	Seminole Electric Cooperative, Inc.	Brenda K. Atkins		
5	Snohomish County PUD No. 1	Sam Nietfeld	Affirmative	
5	South Mississippi Electric Power Association	Jerry W Johnson		
5	Southern Company Generation	William D Shultz	Affirmative	
5	Tampa Electric Co.	RJames Rocha	Negative	
5	Tenaska, Inc.	Scott M. Helyer	Abstain	
5	Tennessee Valley Authority	David Thompson	Negative	
5	Tri-State G & T Association, Inc.	Barry Ingold		
5	U.S. Army Corps of Engineers	Melissa Kurtz	Affirmative	
5	U.S. Bureau of Reclamation	Martin Bauer	Abstain	
5	Western Farmers Electric Coop.	Caleb J Muckala		
5	Wisconsin Electric Power Co.	Linda Horn		
6	AEP Marketing	Edward P. Cox	Abstain	
6	APS	Randy A. Young	Negative	
6	Associated Electric Cooperative, Inc.	Brian Ackermann	Affirmative	
6	Bonneville Power Administration	Brenda S. Anderson	Negative	
6	City of Austin dba Austin Energy	Lisa L Martin	Affirmative	
6	City of Redding	Marvin Briggs	Affirmative	
6	Cleco Power LLC	Robert Hirchak	Negative	
6	Colorado Springs Utilities	Lisa C Rosintoski	Negative	
6	Consolidated Edison Co. of New York	Nickesha P Carrol	Abstain	
6	Constellation Energy Commodities Group	Brenda Powell		
6	Dominion Resources, Inc.	Louis S. Slade	Abstain	
6	Duke Energy Carolina	Walter Yeager		
6	Exelon Power Team	Pulin Shah		
6	FirstEnergy Solutions	Kevin Querry	Affirmative	
6	Florida Municipal Power Agency	Richard L. Montgomery	Negative	
6	Florida Municipal Power Pool	Thomas Washburn		
6	Florida Power & Light Co.	Silvia P. Mitchell	Affirmative	
6	Great River Energy	Donna Stephenson		
6	Imperial Irrigation District	Cathy Bretz	Affirmative	
6	Kansas City Power & Light Co.	Jessica L Klinghoffer	Affirmative	
6	Lakeland Electric	Paul Shipps	Abstain	
6	Lincoln Electric System	Eric Ruskamp	Affirmative	
6	Manitoba Hydro	Daniel Prowse	Affirmative	
6	MidAmerican Energy Co.	Dennis Kimm	Affirmative	
6	New York Power Authority	William Palazzo		
6	Northern Indiana Public Service Co.	Joseph O'Brien	Affirmative	
6	NRG Energy, Inc.	Alan Johnson	Abstain	
6	Omaha Public Power District	David Ried	Affirmative	
6	PacifiCorp	Scott L Smith	Abstain	
6	Platte River Power Authority	Carol Ballantine	Abstain	
6	PPL EnergyPlus LLC	Mark A Heimbach		

6	Progress Energy	John T Sturgeon	Affirmative	
6	PSEG Energy Resources & Trade LLC	Peter Dolan	Abstain	
6	Public Utility District No. 1 of Chelan County	Hugh A. Owen	Abstain	
6	Sacramento Municipal Utility District	Claire Warshaw	Affirmative	
6	Salt River Project	Steven J Hulet	Affirmative	
6	Santee Cooper	Michael Brown	Abstain	
6	Seattle City Light	Dennis Sismaet	Negative	
6	Seminole Electric Cooperative, Inc.	Trudy S. Novak		
6	Snohomish County PUD No. 1	William T Moojen	Affirmative	
6	South California Edison Company	Lujuanna Medina	Affirmative	
6	Southern Company Generation and Energy Marketing	John J. Ciza	Affirmative	
6	Tacoma Public Utilities	Michael C Hill	Affirmative	
6	Tampa Electric Co.	Benjamin F Smith II	Negative	
6	Tennessee Valley Authority	Marjorie S. Parsons	Negative	
8		Edward C Stein		
8		James A Maenner	Affirmative	
8		Merle Ashton	Affirmative	
8		Roger C Zaklukiewicz	Affirmative	
8		Kristina M. Loudermilk		
8	INTELLIBIND	Kevin Conway	Negative	
8	JDRJC Associates	Jim Cyrulewski	Affirmative	
8	Transmission Strategies, LLC	Bernie M Pasternack	Abstain	
8	Utility Services, Inc.	Brian Evans-Mongeon	Abstain	
8	Volkmann Consulting, Inc.	Terry Volkmann	Affirmative	
9	Commonwealth of Massachusetts Department of Public Utilities	Donald Nelson	Affirmative	
10	New York State Reliability Council	Alan Adamson	Affirmative	
10	Northeast Power Coordinating Council	Guy V. Zito	Affirmative	
10	ReliabilityFirst Corporation	Anthony E Jablonski	Affirmative	
10	SERC Reliability Corporation	Carter B Edge	Abstain	
10	Texas Reliability Entity, Inc.	Donald G Jones	Affirmative	
10	Western Electricity Coordinating Council	Steven L. Rueckert	Abstain	

Individual or group. (51 Responses)
Name (31 Responses)
Organization (31 Responses)
Group Name (20 Responses)
Lead Contact (20 Responses)
Question 1 (45 Responses)
Question 1 Comments (51 Responses)
Question 2 (43 Responses)
Question 2 Comments (51 Responses)
Question 3 (0 Responses)
Question 3 Comments (51 Responses)

Group
Northeast Power Coordinating Council
Guy Zito
Yes
No
Group
Bonneville Power Administration
Chris Higgins
No
BPA believes the term communications system and channel needs to be clarified as to whether the intent is the communications system, a channel on the telecommunication channel, the teleprotection channel, or the teleprotection function. Minimum battery maintenance interval is to assure that the battery plant will perform as needed, and obtain a reasonable confidence that it will continue acceptable performance until the next maintenance evaluation. Typically, any utility VLA battery application, steady state float charge/long duration discharge, a Monthly or Quarterly maintenance is excessive given a proper design/maintenance program (IEEE 450, 484, 485). There is a 60 year proven history of this. BPA recognizes that there will be specific VLA battery installations that will be required beyond this minimum. BPA recommends to roll the 4 month maintenance into the 18 month maintenance schedule. The scientific vetted method of determining a VLA batteries current performance, and projected performance, is a capacity test. This has been scientifically verified at least 10 times since 1919, with consistent results. This approach is consistent with the IEEE 450, as well as many other standards, and is supported by the industry. If an alternate approach using measured parameters to predict current and future battery performance is to be allowed, then it must assure the same result. Battery monitoring does enable measurements to be made automatically with greater frequency. Additionally it provides the ability to collect, store, report, and analyze data from the battery even during an outage. It does not mitigate the necessity to perform battery maintenance. If battery monitoring is performed mandatory maintenance should also be required on the monitor.
Yes
BPA requests the drafting team to provide more detailed examples of the following for both monitoring and testing: • That addresses the multiple routes, and automated switching between the routes, in a typical large Telecommunications Network Cloud. This applies only if testing of the 'cloud', or a teleprotection channel through the 'cloud', is the intent of the standard. • That addresses the fact that many older teleprotection technologies, not only used separate test inputs/outputs, but the internal path through the equipment is unverified until the particular function is activated. I.E.: In certain technologies, a functioning 'guard' signal does not have any correlation to a functioning 'trip' signal.
Table 1-2: Communication Systems: BPA believes that the entire section of Table 1-2 needs clarity. A channel, channel performance criteria, & communication system all have very precise definitions in

the communications world. (Please refer to Supplemental Frequency AQ – Figure 1 – Typical Transmission System Diagram,Telecommunications Network Cloud) When referring to the terms in Table 1-2, if the drafting team is referring to the 'telecommunications cloud', this section is unclear. BPA believes it is more clear if the drafting team is referring to the two telecommunications equipment panels and requests documented clarification. The traditional term for this would be teleprotection channel or teleprotection function. BPA assumes the intention was teleprotection channel. BPA recognizes that the teleprotection equipment panels, in many modern cases, are built into the relay. For background information, the Telecommunications Network is composed of multiple Communication Systems (40 to 50 is not uncommon) that contain multiple thousand (5-6K) pieces of equipment. These systems and equipment are tied together with hundreds of thousands of Communication Channels and Tributaries. Most of the Channels and Tributaires have, at least a primary and backup (WECC Guideline: Design of Critical Communications Circuits), and some have multiple primary's and backups. All of these are needed to create the circuit connections, as indicated on the diagram from one teleprotection panel to another teleprotection panel. Given the above scenario - the confusion is possible.; As an example, for the component attribute: 'Any unmonitored communication system necessary for the correct operation of the protective functions, and not having all the monitoring attributes of a category below.' The 4 calendar month maintenance activity is to: 'Verify that the communications system is functional' The questions that arise are which systems, the drop system or the transport system? The whole system, or just the part carrying the protective signals? What about the channels interconnecting the various systems and so on? BPA suggests clarifying : Any unmonitored teleprotection function necessary for the correct operation of the protective functions, and not having all the monitoring attributes of a category below. The 4 calendar month maintenance activity is to: 'Verify that the teleprotection function is functional' BPA believes this is a much better approach as it identifies only that the teleprotection panels must get inputs and outputs to the relays between them. BPA believes more clarity is still needed. A simple example of an old tone based FSK transfer Trip System over a single point to point analog MW radio channel; the teleprotection panel will normally transmit a guard tone in a particular spectrum over a single radio channel to the teleprotection panel at the far end. BPA understands that one way to verify that the teleprotection function is serviceable in a 4 month maintenance activity is if the guard signal arrives a the opposing end, correct? BPA infers that this is efficient as entities can now monitor loss of guard and have a continuously monitored system which will result in performing just a 12 year maintenance. Is this correct? This raises the question of the trip function. Until the the trip function is energized from the relay, the circuitry sending the trip by initiating a FSK in not functioning. Does this function needs to be check in addition to the guard function? This raises the question of the MW radio channel. BPA recognizes that the FSK trip signal travels over different spectrum in the analog MW radio. Even if the radio will transmit a Guard FSK signal to the far end, it will not necessarily transmit a Trip FSK signal to the far end (a common hidden failure mode in many MW system). Do entities need to check for guard at the far end and test that a FSK Trip signal propagates through the radio system and is received at the teleprotection panel? BPA requests clarification in the followings scenario: Using testing inputs as opposed to operating inputs that trips and guards may be initiated from a different set of inputs of the teleprotection panel, and monitored from a different set of outputs on the teleprotection panel (very common on teleprotection equipment). The test might work, but an actual Trip signal would not work (a common hidden failure mode on current available equipment). If one were to say 'good enough' for a 4 month test (and hope any auditors agree if there is ever a false operation). How about the 12 calendar year test? For a point to point analog MW radio, there is only a single channel that can be tested for passage of guard and trip tones. If the radio is redundant, which it most likely is (WECC Guideline: Design of Critical Communications Circuits) then this has to be done twice, once for each path. Can the drafting team clarify this scenario? In a more typical real-world case, the circuit connection, between the two teleprotection panels, will transverse multiple redundant communications systems. If it crosses 4 redundant systems in the communications cloud, then there are a total of 4^2 or 16 possible communication channels, each with different test criteria, that need to be tested. Additionally, the channels are rerouted manually and automatically much faster than a 12 year cycle (daily is not uncommon). Do all these combinations need to be tested? This discussion illustrates the confusion of the current wording. BPA recommends that: If the intention is to test in the 'cloud' or the performance of the 'cloud', BPA believes there needs to be a new standard, or set of standards created to deal with the intricacies of the telecommunication cloud. If the intention was to test the teleprotection channel, BPA believes additional clarity needs to be provided to address the dynamic redundancies and rerouting of the

communications system. If the intention was to test the teleprotection function BPA believes additional clarity needs to be provided to test/monitor the functions (inputs and outputs) between the teleprotection panels. Table 1-4(a): VLA Battery: 4 Months/Inspect/Electrolyte Level BPA believes that for a properly designed and installed steady state float charge/long duration discharge type battery plant this is not needed. The inspection at 4 Month intervals will unearth catastrophic failures (Split cells, Severe overcharging, etc…). These types of failures can happen anytime, and need to be designed around. Unless the battery plant is under high cyclic load, water usage can be handled in a 12/18 month maintenance cycle. Severe overcharging needs to be dealt with by design/maintenance practices (for example: an Appropriate high voltage alarmed with an immediate call out) since 4 months is too long to wait to detect the condition. Minor overcharging will not be detectable in a 4 month interval (and one wants to very slightly overcharge a battery verse any individual cell being undercharged, but that is a whole different technical discussion). IEEE484 specifies ventilation should be provided for the worst-case hydrogen generation due to overcharging. Other than an inherent manufactures defect that can happen anytime 24/7, splitting cells due to sulfation build up is a slow know process that can be handled in a 12/18 month maintenance cycle with a good visual inspection. Although this is in line with IEEE450, given the specific type of battery configuration in the utility world, this is excessive. Should there be a unique battery plant design, then it is incumbent on that utility to have appropriate shorter intervals. BPA is in support of “For unintentional grounds” and recognizes that it does not apply to intentionally grounded battery systems (teleprotection systems run off of communication batteries in sites where there is no station battery { i.e.: Grand Coulee/Lower Snake }). In general there are two types of batteries used by utilities, outside of their control centers, which will be supplying protective systems. The vast majority is the station battery, which is described very well in the IEEE standards: Switchgear control battery applications typically require output current levels that vary over a relatively long period of time. The battery operates on a float charge during steady state conditions. The battery charger powers relays, indicating lights, and peripheral devices during normal conditions. Instantaneous operation of the circuit breaker and switches require battery output current. Initially, this current may be relatively high for a short duration and then reduce for an extended period of time, followed by another high operating current demand. If the charger output is lost, these low-level currents are supplied by the battery for a specified period. The second is a telecommunications battery supplying the teleprotection equipment (excluding the telecommunications batteries supplying only the communication cloud), which are described very well in the IEEE standards: Telecommunication systems are typically of high reliability, with a minimum uptime of 99.99% is often required. Although the batteries are sized for long duration discharge, short duration discharges are usually the case. Excess charging capacity is often available because of redundant charger configurations and engineered overcapacity. The reserve battery time is usually of long duration.
Group
ACES Power Marketing Standards Collaborators
Nick Wehner
Yes
Yes
Several capitalized terms in the supplementary reference document are used inconsistently with their definition or the reference to their definition is not clear. For example, “communications Systems” in the second bullet in section 2.2 uses “Systems” inconsistently with its definition. The use of “sensing Element” on page 6 is another example. We believe this is inconsistent with the definition of Element which could be a generator, transformer, circuit breaker, bus section, etc. but does not appear to be a Protection System Component. The “localized” definition of Component that is contained in the standard should also be included in the reference document since it is not in the NERC Glossary. Use of “dc Load” on page 82 is not consistent with the definition of Load. Load is an end use customer. There are many other places in the document where there are inconsistencies with these definitions. Thus, the document needs to be further reviewed to ensure the use of the terms is consistent with their definitions.
-1- The data retention requirements for Requirements R2, R3, R4, and R5 are not consistent with NERC Rules of Procedure. Section 3.1.4.2 of Appendix 4C – Compliance Monitoring and Enforcement Program states that the compliance audit will cover the period from the day after the last compliance

audit to the end date of the current compliance audit. The data retention requirements compel the registered entity to retain documentation for the longer of “the two most recent performances of each distinct maintenance activity for Protection System Components, or all performances of each distinct maintenance activity for the Protection System Component since the previous scheduled audit date”. Given that many of the maximum maintenance intervals exceed audit periods for responsible entities, an entity could be required to retain data previous to its last audit, which is not consistent with the Rules of Procedure. We suggest changing this such that the data only needs to be maintained since the last audit. -2- Under the “Definitions” section, for the definition of “Protection System” it is unclear whether the bullets constitute items that are considered to be Protection Systems, elements that may be included within a Protection System, or elements which all must be included to constitute a Protection System. A statement preceding the bullets that explains their relationship to the term “Protection System” would be helpful. This clarification should at least be made within the supplementary reference document, if it cannot be made to the actual definition. -3- Requirement R1 VSLs: It is not clear why missing three component types jumps to a Severe VSL. Missing two is a Moderate VSL. Missing three should be a High VSL.
Group
Imperial Irrigation District (IID)
Jesus Sammy Alcaraz
No
IID does not agree with the proposed changes to the definition of Inspect using the word Examine and suggests using Visual Examination instead.
No
Individual
Michelle D'Antuono
Ingleside Cogeneration LP
Yes
Ingleside Cogeneration LP agrees that the changes described above make PRC-005-2 clearer and less ambiguous. We believe that this will result in far fewer violations related to administrative or documentation errors – and focus on those cases which actually may impair BES reliability.
No
Although Ingleside Cogeneration LP does not want to derail the improvements that the SDT has obviously made to PRC-005-1, we remain concerned that expansions in scope of a BES Protection System will automatically roll over to other standards. For example, if the loss of a low voltage auxiliary transformer can trip a generator, its Protection System will be in-scope for PRC-005-2. It is not a big leap in logic to assume that the auxiliary transformer itself should be a BES Element – and subject to the whole body of CIP, MOD, IRO, and TOP standards. Our experience has been that Compliance authorities will make these assumptions, even if that was never the intent of the SDT. The effort to develop and maintain procedures, test results, and communications concerning every BES Element is not trivial – and a single instance of a missed requirement may lead to fines in the thousands of dollars. Ingleside Cogeneration is committed to take any action required to assure BES reliability, but NERC and the project teams must have evidence of its own that it is worth the cost.
Group
Duke Energy
Greg Rowland
Yes
No
Duke Energy votes “Negative” because we strongly object to the wording in the Applicability section 4.2.1. We believe that the wording change to PRC-005-2 draft 4 after the previous Successive Ballot

but prior to the associated Recirculation Ballot expanded the reach of the standard to relaying schemes that detect faults on the BES but which are not intended to provide protection for the BES. The SDT's response to our comment directs us to Section 2.3 of the Supplementary Reference And FAQ Document which states "There should be no ambiguity: if the element is a BES element then the Protection System protecting that element should be included within this Standard." We agree with that statement, but point out that Section 4.2.1 is inconsistent with that statement, and has a much broader reach because it includes devices that detect Faults on the BES but which do NOT provide protection for the BES. Compliance audits will be driven by the words in the standard, not the explanations in the Supplementary Reference And FAQ Document. We would appreciate a response to our concern that explains the reliability benefit associated with this expansion of scope, and which specifically addresses the following Duke Energy situation: Duke Energy's standard protection scheme for dispersed generation at retail stations would become subject to the standard due to the changes in section 4.2.1. These protection schemes are designed to detect faults on the BES, but do not operate BES elements nor do they interrupt network current flow from the BES. In the most recent draft, the relays, current transformers, potential transformers, trip paths, auxiliary relays, batteries, and communication equipment associated with the dispersed generation protection scheme would be subject to the requirements in PRC-005-2. Previous drafts of the standard would not have required Duke Energy to maintain the protection system components associated with dispersed generation schemes at retail stations in accordance to the requirements in PRC-005-2. The new wording in section 4.2.1 would add significant O&M costs and resource constraints due to the inclusion of protection system devices at retail stations without increasing the reliability of the BES. Duke Energy does not believe it was the intent of the standard to include elements that did not have an impact on the reliability of the BES. Duke Energy would prefer the following wording for Section 4.2.1: Protection Systems that are installed for the purpose of protecting BES Elements (lines, buses, transformers, etc.)". FERC's September 26, 2011 Order in Docket No. RD11-5 approved NERC's interpretation of PRC-005-1 R1 and R2, stating: "The interpretation clarifies that the Requirements are "applicable to any Protection System that is installed for the purpose of detecting faults on transmission elements (lines, buses, transformers, etc.) identified as being included in the [BES] and trips an interrupting device that interrupts current supplied directly from the BES." This interpretation is consistent with the Commission's understanding that a "transmission Protection System" is installed for the purpose of detecting and isolating faults affecting the reliability of the bulk electric system through the use of current interrupting devices."
Group
Progress Energy
Jim Eckelkamp
R3 and the VSL for R3 seem to imply that an entity would not be in violation of this standard if they exceed their PSMP intervals (including any program grace) as long as the maintenance is performed within the maximum intervals prescribed within the tables. This interpretation was further supported in the previous draft of the Supplemental Reference (Section 8.2.1, page 35), which stated: "According to R3, a strictly time-based maintenance program would only be in violation if the maximum time interval of the Tables is exceeded." However, this statement has been removed from the supplemental document under the latest draft revision. Would the entity be noncompliant if they exceed their PSMP interval but not the maximum table interval? 2. Table 1-4(e): Typo. "Any Protection System dc supply used only for tripping only…." 3. Page 51, 4th paragraph, 5th line: Typo "thre" should be "three."
Individual
Michael Falvo
Independent Electricity System Operator
Yes
No
The IESO continues to disagree with the VRF assigned to the new Requirements R3 and R4. R3 and

R4 ask for implementing the maintenance plan (and initiate corrective measures) whose development and content requirements (R1 and R2) themselves have a Medium VRF. Failure to develop a maintenance program with the attributes specified in R1, and stipulation of the maintenance intervals or performance criteria as required in R2, will render R3/R4 not executable. Hence, we reiterate our request to change R3's VRF to Medium.
Individual
Jennifer Wright
San Diego Gas & Electric
Yes
TABLE 1-5: Similar to the distributed under-frequency load-shedding relays, SPS control circuitry should only be regulated to verify the integrity of the control circuits from the relay to the lockout or auxiliary relay that is used to trip the circuit breakers, but not to the circuit breakers themselves. Owners of SPS control circuitry should have the option of testing these schemes using test procedures that will confirm the control circuitry through the completed trip circuit is continuous and that the circuit breaker will operate when required. Often times the operation of the circuit breaker is confirmed by operation through other protection systems and the SPS function is a parallel path that can be verified without operating the circuit breaker. This change would allow the Transmission Owner to eliminate equipment outages required to test this scheme or the risk caused by removing the SPS for energized testing.
No
R5/M5: M5 should add "The evidence may include but is not limited to…tracking of the unresolved maintenance issue in accordance with the TO's corrective maintenance process." This alleviates the Transmission Owner from setting up a separate corrective maintenance tracking process intended solely for this regulation.
Individual
Dale Dunckel
Public Utility District No. 1 of Okanogan County
Yes
No
In tables 1-4 with regards to station batties. 1. DC Supply voltage. Is this reading taken off the batteries or out of the charger? Which read needs to be documented? 2. Unintentional grounds. If the charger has the ability to detect and alarm on unintentional grounds, do we need to manually check this as well? 3. In the 18 month section there is a reference to Float voltage of charger. How do we document in our procedure? Can we use SCADA? 4. In the NICAD batery section. Why can't we do impedance testing? Why only load testing? 5. In table 1-5 there is mention of "Lockout Devices" does this mean that 86 relays are being brought into scope? 6. In table 2 there is discussion with regard to Alarm paths and alarm path monitoring. Table 1-5 itme 4 discusses Auxiliary Relays in the control circuit path. Typically, Auxiliary relays in this scenario are closed contacts and open when in an alarmed state. For example, a low SF6 alarm contacts on a breaker interrupts the trip circuit and prevents the breaker from operating. Does this type of auxiliary relay need to be tested every 12 years? 7. For monitoring transmission PTs- Can we measure low side voltage (13kv) PTs multiplied by the power transformer ratio to verify transmission PT accuracy? 8. Table 1-3 describes independent "measurements continuously verified by comparison" Does separte AC measurement need to be connected to same relay? or can it be connected to separte relay with comparison done in SCADA?
Individual
Joe Petaski
Manitoba Hydro
Yes
No

Manitoba Hydro is maintaining our negative vote based on our previously submitted comments (see comments submitted in the comment period ending on March 28th, 2012).
Group
MRO NSRF
Will Smith
Yes
While we agree with the changes made, we believe that table 1-4 should include in the 18 calendar month maintenance activities: 1) Setting the battery charger to equalize, and 2) Inspect battery charger components for leakage and or damage. These additional steps would verify the ability of the battery charger to operate as needed.
Yes
Individual
Kenneth A Goldsmith
Alliant Energy
Yes
While we agree with the changes made, we believe that Table 1-4 should include in the 18 month maintenance activities more checks on Battery Chargers. Based on EPRI data and vendor recommendation we believe that 1) Setting the Battery Charger to equalize, and 2) Inspect battery charger components for leakage and/or damage should be added. These additional steps would better verify the ability of the battery charger to operate as needed.
Yes
Section 15.4 of the FAQ document does an excellent job of describing the details of battery maintenance and testing, but there is essentially no description of battery charger maintenance and testing activities. We believe this section needs to be expanded to include a good description of battery charger maintenance activities as well.
We appreciate the work done by the SDT and believe it is an excellent product.
Individual
Thad Ness
American Electric Power
No
The first column, third row of Table 1-2 should be clarified to indicate whether the bulleted items are related by an “or” clause or an “and” clause. For example, must the communication system have either or both of those attributes for it to be considered?
Yes
Rather than voluminous supplementary references, we suggest adding this information, as necessary, to the standard itself. Not only would this prove beneficial by having less information housed outside of the standard, it might also help prevent the need for future CANs and interpretation requests. Though the guidance provided in these documents may appear to be beneficial, we are troubled that the SDT feels it is necessary to provide such a volume of material outside the standard itself, and yet still consider such “references” as enforceable.
As stated in our previous comments for R3, Table 1-5 notes a “mitigating device” as part of component attributes. The meaning of this phrase is open to interpretation and needs to be clearly defined. Is it a discrete device? A protection scheme? Either? The team’s response, by stating its intentions regarding this phrase, actually illustrates the need to provide clarity for this term within the standard. As stated previously, under the time-based maintenance method and R3, the Entity will be required to utilize the minimum maintenance activities and maximum maintenance intervals prescribed within Tables 1-1 through 1-5, Table 2, and Table 3. Special Protection Systems, by their nature, may physically include components that are not listed in the NERC definition of Protection System and therefore are not included in the tables of PRC-005-2. The standard, as currently drafted, does not clearly provide a means for an Entity with a Special Protection System to establish both

minimum maintenance activities and maximum maintenance intervals for components that have been declared by their Region as part of a Special Protection System but that are *not* included in the NERC definition of Protection System. For example, consider a Special Protection System that is comprised of the following elements: Generating Unit Distributed Control System (DCS) - Qty 1 Protective Relays - Qty 4 - Provide digital inputs to DCS Boiler Pressure Transmitters - Qty 2 - Provide analog inputs to DCS For a predetermined set of system events, the protective relays operate, indicating to the DCS that the event has occurred. If the pressure transmitters indicate that the boiler pressure exceeds a predefined threshold, the DCS responds by adjusting the analog output signals to the turbine valves. For compliance with the existing version of PRC-017-0, the owner of the above system has written a Maintenance and Testing Program that thoroughly tests the protective relays, DCS logic and analog inputs and outputs. However, under PRC-005-2, the owner of the system would not be able to use the proposed performance based method because the system does not have the required Segment population of 60 components. This leaves the owner no other option than the time based method. However, only the protective relays meet the NERC definition of Protection System and they are the only elements of this hypothetical SPS described in Tables 1-1 through 1-5. The existing PRC-005-2 draft does not contain time based activities that would be applicable to the DCS logic, analog inputs and analog outputs. Therefore, whereas the existing NERC standards demand the testing of these devices, NERC standards would no longer require their testing upon the implementation of PRC-005-2.
Group
Southwest Power Pool NERC Reliability Standards Development Team
Jonathan Hayes
Yes
No
N/A
Individual
Ed Davis
Entergy Services
Entergy provides the following comments to achieve consistency in the written standards: • Numbers indicating measurable quantities should be numbers: 95%, 5%, etc. and not spelled out. • Words indicating a specific document or entity should be capitalized: this Standard • Words indicating generic devices should not be capitalized: components, faults, monitors, misoperation • If two words go together with a singular meaning they should both be either capitalized or not: Communication Systems
Group
Nebraska Public Power District
Cole Brodine
Yes
No
We recommend removing requirement 5. This is adding the requirement for a corrective action program to the standard. Performance metrics should be utilized to measure if a registered entity is correcting maintenance deficiencies in a timely manner. Examples of performance metrics include: • A Countable event has already been defined in the definition of terms, which would cover the need to replace equipment. • The quantity and causes of Misoperations are a direct correlation to good or poor maintenance practices and corrective actions by a utility. • TADS records events which are initiated by failed protection system equipment and would identify utilities with poor corrective action processes. Can you show us a study or references justifying why records need to be kept for longer

than the end of the current audit period. We are concerned that the complexities and costs of tracking and maintaining records, along with the corresponding maintenance program and PRC-005 revision that old tests would fall under will be an undue cost to small utilities. We suggest requiring entities to retain the last maintenance record or any records created during the current audit period. The comment from the previous consideration of comments, “The SDT believes that Protection Systems that trip (or can trip) the BES should be included” seems to include any device that can affect the BES. This sets a precedence to include any device that can trigger trip coils into the maintenance system. These devices are meant to protect equipment and not the BES. Based on the IEEE device numbers, please indicate which devices are part of the BES protection system and should be included in a maintenance program. Why do functional trip checks need to be done on any interval if checks are done upon commissioning, maintenance and modification? We suggest eliminating any interval and making the requirement to check upon commissioning, maintenance and modification. Comments on SAR for 2007-17 Very few reclosing relays protect the BES. Most reclosing relays actually would have a negative impact on the reliability of the bulk electric system . It is imperative that the SDT clearly define what types of reclosing relays are referred to here, and if it pertains to ANY reclosing relay that can affect the BES. There is a difference between components designed to protect the BES and components which can affect the BES. For R5 if the maintenance interval is 6 years does the maintenance issue become an “unresovled” item immediatley or does the next maintenance interval 6 years later need to be reached before it takes on an unresoved status to be auditable under R5? Comments: Suggest for monitored microprocessor relays in Table 1-1 and 3 to change wording to verify “settings are as specified that are essential to the proper functioning of the protection system”. Many settings are not essential. A key concern is will the reliability of the bulk electric system be affected negatively due to increased risk from human element initiated events as a result of the more frequent functional trip checks that will be required. I suggest there be consideration that the interval for functional tests be moved to the minimum frequency of 12 years to minimize this unknown but present risk.
Individual
Anthony Jablonski
ReliabilityFirst
No
ReliabilityFirst offers the following comments related to the bullet points in Question 1: a. Bullet 1 - Agree with definition revisions b. Bullet 2 - Agree with clause 4.2.5.4 c. Bullet 3 - Disagree with revised Table 1-2 “Component Type - Communications Systems.” The revision increased the maximum time for unmonitored systems to 12 years. However, communication failures correspond to one of the top three causes of Misoperations. The revised last row of the Table 1-2 still permits continuous monitoring to be substituted for testing. It is not clear that the available monitoring can actually identify the health of many of the components that can fail in a power line carrier communication system. RFC believes more research is needed to substantiate the 12 calendar year maintenance interval for unmonitored communications systems. d. Bullet 4 - Disagree with revised tables 1-4a, 1-4b, 1-4c, 1-4d, and 1-4f “Component Type - Protection System Station dc Supply….” The changes appear to largely ignore the recommendations of the IEEE Stationary Battery Committee.
ReliabilityFirst offers the following comments for considerations: 1. General Comment a. ReliabilityFirst believes not only should there be testing required for individual components (as required Protection System Maintenance Program), ReliabilityFirst believes that the entire Protection System (consisting of all Protective relays, communications systems, Voltage and current sensing devices, etc.) should be tested as a whole. Individually each component may test successfully but while tested as a complete Protection System (through interaction between all the interdependent components), deficiencies in settings along with logic and wiring errors could be discovered. 2. Requirement R5 a. ReliabilityFirst believes the language in Requirement R5 (“…shall demonstrate efforts to correct…”) is subjective and non-measurable. It will be difficult in determining what amount of “demonstration” an entity will need to provide in order to be compliant along with lack of timeframe in which the correction needs to be completed. While RFC understands it is hard to prescribe a specific timeframe/deadline (it can depend on various number of supply, process and management problems), RFC believes at a minimum, the applicable entity should be required to develop a Corrective Action Plan to address the Unresolved Maintenance Issue. ReliabilityFirst offers

the following modification for consideration: “Each Transmission Owner, Generator Owner, and Distribution Provider shall put in place a corrective action plan to remedy all identified Unresolved Maintenance Issues.”
Individual
Maggy Powell
Exelon Corporation and its affiliates
1. In the response to Exelon’s previous comment regarding current transformers, the SDT disagreed that test mandated by the current Standard draft seeks to measure a signal is “provided to the protective relay”; however, the test referenced in Table 1-3 merely confirms that the signal is sent and not that it reached the correct protective relay. Generation sites are built in phases, and these requirements do not ensure that the wiring of the protection system matches the prints and the intent of the engineers who designed it. Please provide a technical explanation of how this type of test for a CT will verify that the signal reaches the relay. 2. In the response to Exelon’s previous comment related to the maintenance activity in Table 1-3 for PTs and CTs as they relate to electro mechanical relays the SDT disagreed that the maintenance program should be left to the discretion of the Generator Owner. Exelon further explained that In order to meet the required activity specified in PRC-005-2 draft 2 Table 1-3, the generating unit would be required to take readings with meters while the unit is operating. This practice introduces a risk of tripping the unit inadvertently. The risk of tripping the unit while performing this maintenance activity is contrary to the intended purpose of PRC-005 and introduces a potentially adverse affect on the reliability of the BES. In its response the SDT has not provided the justification as to why performing such a high risk activity increases the reliability of the BES and justification for testing that refutes existing manufacturers recommendations. 3. In the last round of comments, the SDT did not specifically address Exelon’s comments regarding the omission of “...and trips an interrupting device that interrupts current supplied directly from the BES” from the revised applicability language in Section 4.2.1. We are concerned that the SDT may not fully appreciate our concern. Without the qualification that comes from the “and…” phrase above, Exelon feels that section 4.2.1 will bring reverse-looking relays on radial transformers into scope, which are not interpreted as BES Protection Systems. By doing so, it creates a perverse incentive to disable these protection functions, even though they provide a reliability benefit, for the sake of limiting compliance exposure. Please offer a direct response to why the phrase, “...and trips an interrupting device that interrupts current supplied directly from the BES” is no longer included in 4.2.1 and clarify that non-BES relays are not considered within scope. Comments and SDT Response from last comment period (for reference): Exelon Comment: When the SDT changed the original PRC-005 applicability language from “...affecting the reliability of the BES...” to the new 4.2.1 language “...that are installed for the purpose of detecting faults on BES elements (lines, buses, transformers, etc.)”, they opted to exclude the second half of this sentence taken from the PRC-005-1a Interpretation, which read “...and trips an interrupting device that interrupts current supplied directly from the BES.” By doing so, the SDT failed to recognize that some Protection Systems can be responsive to faults on the BES, but still have no effect on the reliability of the BES. The change in 4.2.1 may unintentionally expand the scope of PRC-005. Depending on how Section 4.2.1 is interpreted, it could create a perverse incentive to disable, or not apply, reverse directional protection on the secondary (at voltages less than 100kV) of radially connected load-serving transformers. Such relaying typically uses available units in a multifunction device, and while not critically necessary for fault clearing, it is applied because it adds a benefit at no incremental cost with minimal security risk, and it will not interrupt a BES element if it operates insecurely. It also improves reliability to connected distribution load, in the event a BES transmission line faults during abnormal switching, by coordinating with non-directional overcurrent relays that would otherwise interrupt the entire load. Furthermore such directional relaying would only operate after the faulted BES line is already removed from any connection at BES voltages via its high voltage (>100kV) circuit breakers. Viewed in an expansive way, the proposed 4.2.1 language could bring into scope these relays as well as tripping circuits of distribution voltage circuit breakers that are normally operated in a radial configuration. It would be reasonable for a TO to disable this relaying, rather than accept these consequences. In the previous comment period (Sept 2011), industry raised similar concerns and to most of the commenters, the SDT responded with the following statement:”The SDT believes that the Applicability as stated in PRC-005-2 is correct and that it supports the reliability of the BES. The SDT

observes that the approved Interpretation addresses the term, “transmission Protection System”, and notes that this term is not used within PRC-005-2; thus the interpretation does not apply to PRC-005-2. PRC-005-2 specifically addresses “Protection Systems that are installed for the purpose of detecting faults on BES Elements.” Please see Section 2.3 of the Supplementary Reference and FAQ document for additional discussion.” Unfortunately, this response fails to address the concerns raised above. Entergy previously suggested the following language for 4.2.1:”Protection Systems that are installed for the purpose of detecting faults on BES Elements (lines, buses, transformers, etc.) and trips an interrupting device that interrupts current supplied directly from the BES Elements.”This language is appropriate and addresses industry concerns. We ask that the SDT adopt this language as Section 4.2.1. SDT Response: The SDT believes that the Applicability, as stated in PRC-005-2, is correct and supports the reliability of the BES. The SDT observes that the approved Interpretation addresses the term, “transmission Protection System,” and notes that this term is not used within PRC-005-2; thus, the interpretation does not apply to PRC-005-2. PRC-005-2 specifically addresses “Protection Systems that are installed for the purpose of detecting Faults on BES Elements.” Please see Section 2.3 of the Supplementary Reference Document for additional discussion. Thank you for the opportunity to comment.
Individual
Eric Salsbury
Consumers Energy
Yes
We agree with the purpose in section 3 of the Standard. However, section 4.2.1 expands the scope from "affecting the reliability of the Bulk Electric System" to "detecting Faults on BES Elements". In our opinion, the Applicability should be limited to the stated Purpose. Expanding the scope as is done in 4.2.1 greatly increases the number of Protection Systems covered without an increase in reliability of the BES. We prefer the applicability as expressed in Appendix 1 of PRC-005-1b. We suggest changing "Component Type" in R1.2 to something similar to "Segment" as defined within the Standard. A "Component Type" limits to one of five categories, whereas a "Segment" must share similar attributes. In item 2 of the second section of Attachment A, it is only necessary to use 5%, as 5% of a Segment (minimum of 60) is always 3 or more.
Group
PacifiCorp
Sandra Shaffer
Yes
No
Individual
Chris Searles
BAE Batteries USA
No
I agree with the basic changes, but recommend that a slight modification be made to Tables 1-4(a) and 1-4(b). In the box defining the 18 calendar Months or 6 Calendar Years, the portion in parentheses (e.g. internal ohmic values or float current) should be changed to (e.g. internal ohmic values or float current in concert with other accepted measurements).
Yes
1. On page 21 of 97,Question 7.1, "Please provide an example of the unmonitored versus other levels of monitoring available," "Every six calendar years, perform/verify the following: Battery performance test (if ohmic tests are not opted)" - add after ohmic tests "or other accepted battery measurement parameters." 2. pg 22 of 97, Example 2 "Every 18 calendar months": Add the same verbiage so that the first bullet reads: "Battery ohmic values or other accepted battery measurement parameters to

station battery baseline . . ." 3. pg 23 of 97, Example 3 "Every 18 calendar months": Add the same verbiage so that the first bullet reads: "Battery ohmic values or other accepted battery measurement parameters to station battery baseline . . ." 4. pg 23 of 97, Example 3 "Every six calendar years": Add the same verbiage so that the first bullet reads: "(if internal ohmic test or other accepted battery measurement parameters to station battery baseline are not opted)" 5. pg 27 of 97, Question 8.1.2, item #4: Change the last sentence to read: "However, the methods prescribed in these recommendations cannot be specifically required because they are offered as best practice guidelines and not set as standards." 6. pg 71 of 97, Question 15.4.1, Frequently asked Questions: "How is a baseline established for cell/unit internal ohmic measurements?" 2nd paragraph, 1st sentence, replace the word "consistent test equipment" with "the same type of test equipment." In addition, should add a final sentence at the end of this paragraph that states,"Also, in many cases, one manufacturer's 'conductance' test may not produce the same measurement results as another 'conductance' test manufacuter's equipment. Therefore, for meaningful results to an established baseline, the same instrument should always be used." 7. Page 73 of 97, Question 15.4.1, Frequently asked questions: "What conditinos should be inspected for visible battery cells?" Approximately in the 7th line modify the sentence to read . . .abnomral color(which is an indicator of sulfation or possible copper contamination) . . . 8. Page 75 of 97, Question 15.4.1, Frequently asked questions:"How do I verify the battery string can perform as manufactured?" 2nd paragraph that reads "Whichever parameter is evalutated . . ." should be revised to say "Whatever parameters are used to evaluate the battery (ohmic measurements, float current, float voltages, specific gravity, performance test, or combination thereof), the goal is to determine . . . 9. Page 75 of 97, Question 15.4.1, Frequently asked questions:"How do I verify the battery string can perform as manufactured?" 5th paragraph starts, "A detailed understanding of the characteristic of a battery is also attempting to use float current as a measure of the abitlity of a battery . . . and ends with "to see if a trending process is reommended for determining aging of these products." The Stationary Battery Task Force recommends deleting this whole paragraph due to inaccuracies or statements that are not relevant. If a paragraph that alludes to float current is considered critically essential, then a short paragraph could be substituted which might say," Float current along with other measureable parameters can be used in lieu of or in concert with ohmic measurement testing to measure the ability of a battery to perform as manufactured. The key to using any of these measurement devices is to establish a trending line against baseline so that a documented process establishes the validity of the judgement used to determine that the battery may perform or not perform as manufactured." 10. Page 81 of 97, Question 15.4.1, Frequently asked questions: "Why does it appear that there are two maintenance activities in Table 1-4(b) for VRLA batteries . . . .?" 3rd paragraph: "A comparison and trending against the baseline new battery ohmic reading can be used in lieu of capacity tests to determine remaining battery life. Remaining battery life is analogous to stating that the battery is still able to 'perform as manufactured.'" This might better be restated as follows: "Trending against the baseline of VRLA cells in a battery string is essential to determine approximate state of health of the battery. For example, using ohmic measurement testing as the mechanism for measuring the battery cells, then, if all the cells in the string show to be in a consistent trend line and that trend line has not risen above say a 25-30% deviation over baseline, then a judgement can be made that the battery is still in a reasonably good state of health. This judgement can assume that the battery is still able to 'perform as manufactured.' It would be wise to confirm the accepted deviation range with the manufacuter of the battery in question to assure good judgement in deciding on the state of health to perform as manufactured.' This is the intent of the "perform as manufactured six-month test' at Row 4 on Table 1-4(b)." 11. Page 81 of 97, Question 15.4.1, Frequently asked questions: [same as Item #10 above], following paragraph: Recommend using a range of 25-30% with the statement that "It would be wise to confirm the accepted deviation range with the manufacuter of the battery in question to assure good judgement' in deciding on the state of health to perform as manufactured.

This revision is a major improvement over the previous draft. Hopefully, the comments above are seen in the light of ensuring basic accuracy of the revised statements. They are not intended to materially change the intent of the position agreed upon at the last drafting team meeting.

Group

FirstEnergy

Sam Ciccone

Yes

Yes
FirstEnergy supports the standard and thanks the drafting team for all their hard work.
Individual
Kevin Luke
Georgia Transmission Corporation
Yes
Yes
Recommend adding further comments on data retention. We prefer the interpretation for the maintenance cycles equaling 12 calendar years, example microprocessor protective relays. This proves the extreme of data retention. We interpret the retention period to be 24 years. Previous test record to current test record equals 12 years, and 12 more years (next maintenance cycle) before removing previous records from storage (24 years).
We cast our ballot as an affirmative vote and agree with the nature of the standard. We raise concerns on the measures that are very prescriptive on documentation. We prefer a standard based on the program and measures that track the application and performance of the groups program. Maintaining the documentation for individual elements becomes a group's prime directive along with maintaining the equipment; this develops a process more controlled by documentation than results. This also adds a level of complexity for data retention, the drafting team tried to resolve by reducing the load of data. We contend the retention levels to be extreme considering some of the 12 calendar year cycles, interpret the data for compliance to be 24 years. One cannot remove previous documents until new maintenance performed 12 years after the current recorded date. We recommend reducing the data retention to list or check sheets and not the extreme of each individual component. Another important factor in managing the data is the capability of retrieval after 12 or 24 years. Some systems and formats are not available for 12 or 24 years and add a burden on companies to maintain legacy systems or convert massive amounts of data.
Individual
Brad Harris
CenterPoint Energy
Yes
No
Group
Dominion
Mike Garton
Yes
Yes
The term 'Underfrequency' is capitalized in the Supplementary Reference document yet it is not included in NERC's Glossary of terms. We suggest a return to lower case. In fact, given this document is meant to be used for reference only, we question the need to capitalize any term.
On the Redline version of the standard, page 11 Version History; Version 2 Action, should PRC-005-1a be listed as PRC-005-1b and PRC-017 listed as PRC-017-0. Additionally, it does not appear that the Version History has captured a complete record of all revisions to this standard.
Individual
Steven Wallace
Seminole Electric Cooperative, Inc
Yes

No
The SDT has provided ONE Protection System Component with two differing maintenance periods, the lockout (86) device. Six years is used for the lockout operation and twelve years is used for contact testing of the lockouts. Earlier the SDT had a similar arrangement with microprocessor relays, the microprocessor relay would be tested on a twelve year cycle but the microprocessor's electro-mechanical trip outputs were to be tested on a six year cycle. The SDT then made a decision that the single microprocessor asset would have a common testing cycle of twelve years, reasonably considering it a single asset with a single maintenance cycle of 12 years. To eliminate confusion with lockout relays, it is recommended that a similar decision be made by the SDT to make a single lockout relay asset have a common maintenance cycle of twelve years. The lockout relay twelve year cycle would include both the lockout operational test and the lockout relay tripping contact tests. This twelve year cycle would also be in direct maintenance alignment with other microprocessor relays and auxiliary relay testing cycles. In addition, the sudden pressure relays and their integral control circuit, should either be included or excluded. This is a compliance trap and will lead to many findings of non-compliance, based on sudden pressure relays not being included in many prior versions and currently not included in this version, except for their DC control circuit.
Group
Seattle City Light Operations
Pawel Krupa
SCL supports the position of WECC PNGC with regard to the position paper VRF/VSL recommendation. Specifically it is the contention of PMGC and members that small entities with maybe 2 or 3 components within a Component Type that sustain a violation will unnecessarily be subjected to a “severe” or “high” VSL assignment due to the % based parameter. We feel the SDT did not adequately address our concerns during the last ballot/comment period. While this is a non-issue for larger entities with hundreds or thousands of individual components, we believe this exposes smaller entities to unnecessary compliance risk. 1. The PNGC Comment Group takes issue with the associated VSLs for R3. For a small entity using a time based maintenance program, even one missed interval could be enough to elevate them to a high VSL despite the limited impact on the Bulk Electric System. Consider an entity with 9 total components within a specific Protection System Component Type. One violation would mean an 11% violation rate, enough to catapult them into a High VSL. Given NERC Guidance (following), this seems to be a contradiction given the language of “…more than one” [NERC Guidance on VSL assignment: i. LOWER: Missing a minor element (or a small percentage) of the required performance. ii. MODERATE: Missing at least one significant element (or a moderate percentage) of the required performance. iii. HIGH: Missing more than one significant element (or is missing a high percentage) of the required performance or is missing a single vital component. iv. SEVERE: Missing most or all of the significant elements (or a significant percentage) of the required performance.] Thus we support the WECC PNGC suggestion to change the language for “Lower VSL” for R3 to: 'For Responsible Entities with more than a total of 20 Components within a specific Protection System Component Type in Requirement R3, 5% or fewer have not been maintained…' OR 'For Responsible Entities with a total of 20 or fewer Components within a specific Protection System Component Type, 2 or fewer Components in Requirement R3 have not been maintained…'
Individual
Kirit Shah
Ameren
Yes
We believe that the SDT has improved the definitions with these changes and we fully support them. In addition, we also support the Table 1-2 Communication Systems changes based on our experience, and the Station dc Supply changes in the five Tables 1-4a, 1-4b, 1-4c, 1-4d, and 1-4f because they are realistic and consistent with our experience.
Yes
(1) Capitalizing in some cases is inappropriate (e.g., Systems; Glossary defines System as ‘A combination of generation, transmission, and distribution components.’ So ‘communication System’

incorrectly capitalizes ‘system'). (2) Page 15, we disagree with retention of maintenance records for replaced equipment as this can cause confusion. We believe that at the most the last maintenance date could be retained to prove interval between it and the test date of the replacement equipment that provides like-kind protection. (3) We request the SDT to provide a few examples of ‘non-battery-based dc supply’. The SDT has previously responded that this does not include ‘capacitor trip devices’. Does the SDT mean to include M-G sets, flywheels, and / or rectifiers? Also, Emerging Technologies on page 73 is vague please clarify.

(1) Remove Table 1-4 batteries from the Countable Event definition. (2) Please change Table 1-4(d) title to “Component Type – Protection System Non Battery Based Station dc Supply” [delete: Using Non Battery Based Energy Storage] to be consistent with the definition. (3) R3 & R4: Change VRF to “Medium” for the following reasons: (a) Guideline (3) - Consistency among Reliability Standards is not satisfied. The VRF_Standards_Applicability_Matrix_2012-03-01 clearly shows that comparable requirements in the standards that PRC-005-2 replaces are Medium or Lower, specifically PRC-005-1b R2 VRF is Lower, PRC-008-0 R2 VRF is Medium, PRC-011-0 R2 VRF is Lower, and PRC-017-0 R2 VRF is Lower. (b) The High Risk Requirement is not met. We are not aware that lack of Protection System maintenance alone has directly caused or contributed to bulk electric system instability, separation, or a cascading sequence of failures. (c) Guideline (4) Consistency with NERC’s Definition of the Violation Risk Factor Level is not met. Many entities do not presently perform several of the proposed minimum maintenance activities, and/or perform maintenance activities at greater than the PRC-005-2 maximum interval. Yet BES system instability, separation, or cascading sequence of failure events continues to be extremely rare. (4) Measure M3 on page 6 should only apply to 99.5% of the components. We strongly advocate the SDT to revise and state: “Each … shall have evidence that it has implemented the Protection System Maintenance Program for 99.5% of its components and initiated….” We believe I that PRC-005-2 unrealistically mandates perfection without providing technical justification. A basic premise of engineering is to allow for reasonable tolerances, even Six Sigma allows for defects. Requiring perfection may well harm reliability by distracting valuable resources from higher priority duties concerning the Protection System. Note that we are not suggesting for the VSL to be changed. Our proposed reasonable tolerance sets an appropriate level of performance expectation. We disagree with the notion that this is “non-performance”.

Individual

Laurie Williams

Public Service Company of New Mexico

Yes

1. PNM seeks clarification on the revised Clause 4.2.5.4 of the Applicability section of the standard. - “Protection Systems for station service or excitation transformers connected to the generator bus of generators which are part of the BES, that act to trip the generator either directly or via lockout or tripping auxiliary relays.” Will Auxiliary Transformers that are directly connected to the generator bus of generators which are part of the BES and that step down to distribution level voltage & perform similar functions as that of station service transformer fall under this clause?

Yes

The Supplementary Reference and FAQ Document has served as a valuable resource and PNM commends the drafting team’s efforts in writing a comprehensive document. Section 13. Self Monitoring Capabilities and Limitations – Last but one bullet on Page 59 of the Supplementary Reference and FAQ Document is confusing and needs possible rewording and clarification. “With this information in hand, the user can document monitoring for some or all sections by extending the monitoring to include…” appears confusing.

Table 1-1 Component Type – Protective Relay and Table 1-2 Component Type – Communications Systems refer to Table 2 Alarm Paths and Monitoring for monitoring related attributes. However, the maximum maintenance interval in rows referring to Table 2 in both Tables 1-1 and 1-2 is 12 calendar years whereas there is a row in Table 2 that if there is an Alarm Path with monitoring (row 2 of Table 2), no periodic maintenance is required. Does this mean that even if there is an Alarm Path with monitoring for which no periodic maintenance is required, the component type – Protective Relay or Communications Systems will still be required to be maintained within the maximum 12 calendar years interval? This appears to be contradictory especially since rows in Tables 1-3, 1-4(f), and 1-5 that refer to Table 2 have “no periodic maintenance specified” under maximum maintenance interval. This also appears to be contradictory to the text provided under bullet 1 of Section 5.2 Extending

Time-Based Maintenance which states that – If continuous indication of the functional condition of the Component is available (from relays or chargers or any self monitoring device), then the intervals may be extended, or manual testing may be eliminated." Rows referring to Table 2 in Tables 1-1 and 1-2 do not suggest that manual testing will be eliminated as it is requiring a 12 calendar year maintenance time interval even if it meets the requirements under table 2 for alarm path with monitoring. PNM recommends adding the following under Maximum Maintenance Interval to be consistent with other tables 1-3, 1-4(f), and 1-5 – "12 calendar years OR no periodic maintenance specified".
Individual
Steve Alexanderson P.E.
Central Lincoln
No
Central Lincoln agrees with most of the changes except for the change from "as designed" to "as manufactured" in the Station DC supply table. The concern is not high enough to warrant a negative ballot, and we appreciate the difficulty the SDT has had on this issue with IEEE. The "as manufactured" performance may be interpreted as the battery's capacity when new and fully charged. Of course a properly engineered system will be based on a future aged battery capacity, reduced from the brand new capacity. We prefer "as designed," but this might lead a CEA to ask for design documentation an entity may have not retained. In the end, it is not the manufactured or design capacity that matters, it is the battery's ability to power the protection systems and trip the breakers. We suggest "as manufactured" be changed to "as needed."
Yes
Group
Southern Company
Antonio Grayson
Yes
Related to the changes identified in the Battery Tables: • We do not see that the change from "as designed" to "as manufactured" really changed the meaning of the battery capability to delivery its rated capacity. We would like the SDT to consider the following language: "verify that the station battery can provide adequate power to the Protection System by conducting….." • For Generating Plant Batteries, we feel as though that the only way to prove that a generation battery can deliver what it is supposed to be able to deliver for "All" of its functions is by conducting a capacity test". We would like the SDT to consider adding such a Note to the battery tables and/or make the statement in the FAQ document.
Yes
See comment on Generating Plant Batteries in Question #1.
• We would like the SDT to consider rewording M5 as follows: The evidence may include any form of evidence indicating an entity is demonstrating efforts to correct identified Unresolved Maintenance Issues. Additionally: All of the examples of evidence should be moved to the Supp Ref doc and be there only for reference. • Page numbers should be visible on all pages.
Individual
Wayne E. Johnson
EPRI
No
Table 1-4a Verify that the station battery can perform as manufactured by evaluating the measured cell/unit internal ohmic values against the baseline values of each cell. -and- Verify that the station battery can perform as manufactured by conducting a performance capacity test of the entire battery bank. Table 1-4b Verify that the station battery can perform as manufactured by evaluating the measured cell/unit internal ohmic values against the baseline values of each cell. -or- Verify that the station battery can perform as manufactured by conducting a performance capacity test of the entire battery bank. Table 1-4c Verify that the station battery can perform as manufactured by evaluating the measured cell/unit internal ohmic values against the baseline values of each cell. -and- Verify that

the station battery can perform as manufactured by conducting a performance capacity test of the entire battery bank.
Yes
Why consider the ability of the station battery to perform as manufactured? The reason the term "perform as manufactured" was used is because there is not much data available to verify actual sizing of the cells for their application. The only battery values for typical Protection systems that have a verifiable basis are the battery manufacturer's data. The only way to know when a battery needs to be replaced is to compare measured values against manufacturer's data or other established values. To verify that the station battery can perform as manufactured is the process of determining when the station battery must be replaced or when an individual cell or battery unit must be removed or replaced. Inspections alone do not provide trending information that indicates the state of aging of a station battery. The maintenance activities listed in Table 1-4 to "verify that a station battery can perform as manufactured" are intended to provide information about the aging process of a station battery. A Transmission Owner, Generator Owner or Distribution Provider can then use the information provided by the maintenance activity to determine if testing of a station battery is required or if timely replacement or removal of the station battery or its components (cell/unit) should be accomplished. Capacity discharge testing is the only industry approved method of determining the true capacity of lead acid and nickel–cadmium station batteries. The performance capacity test of the entire battery bank listed as maintenance activities of table 1-4 provides a mechanism for trending battery discharge characteristics based on manufacturers published data. Trending discharge test results is the basis for determining the aging of a station battery serving a Protection System. Based on these results, decisions concerning replacement of a battery serving a Protection System and its components can be made by the Transmission Owner, Generator Owner or Distribution Provider. There is a marked difference in the aging process of lead acid and nickel–cadmium station batteries. The difference in the aging process of the two types of batteries is chiefly due to the electrochemical process of the battery type. Aging and eventual failure of lead acid batteries is due to expansion and corrosion of the positive grid structure, loss of positive plate active material, and loss of capacity caused by physical changes in the active material of the positive plates. However, the primary failure of nickel – cadmium batteries is because of the gradual linear aging of the active materials in the plates. The electrolyte of a nickel – cadmium battery only facilitates the chemical reaction (it functions only to transfer ions between the positive and negative plates), but is not chemically altered during the process like the electrolyte of a lead acid battery. A lead acid battery experiences continued corrosion of the positive plate and grid structure throughout its operational life while a nickel – cadmium battery does not. Changes to the periodic measured properties of a lead acid battery when trended to a baseline can provide an indication of aging of the grid structure, positive plate deterioration, or changes in the active materials in the plate. Since aging in nickel-cadmium cells is linear, periodic measured properties of nickel-cadmium cells when trended to a baseline can provide an indication of aging of the active material in the positive plates. By trending periodic measured properties of a station battery serving its Protection System the Transmission Owner, Generator Owner or Distribution Provider can develop a condition based method to determine (1) when a station battery requires a capacity test (instead of performing a capacity test on a predetermined, prescribed interval), (2) when an individual cell or battery unit should be replaced, or (3) based on the analysis of the trended data, if the station battery should be replaced without performing a capacity test. There is a clear differences in the aging process of lead acid and nickel–cadmium batteries. The measurable properties of a nickel – cadmium battery will change more gradually than VRLA cells; therefore, periodic interval and trending to determine aging has very little industry experience, but the user should work with the battery manufacturer to determine if internal ohmic measurements can be applied to their product. While it has been proven that there is a relationship between internal ohmic measurements and cell capacity of lead acid batteries, an accurate determination of a battery's exact capacity cannot be attained by measuring its cell's internal ohmic values. However, trending internal ohmic measurement of VRLA battery cells to establish a base line is a method of trending measured properties by Transmission Owners, Generator Owners and Distribution Providers to evaluate their station battery cells for health and aging. Evaluating internal ohmic cell/unit measurements against the battery cell baseline values is an acceptable Maintenance Activity listed in tables 4-1(a) and 4-1(b) 4-1(c) to verify that the station battery can perform as manufactured as long as it is measured and trended to the baseline values at an interval less than or equal to the published Maximum Maintenance Interval of tables. Why was the term "manufactured" used instead of "designed" in the maintenance activities of tables 1-4(a), 1-4(b), 1-

4(c), 1-4(d) and 1-4(f)? The phrase “as designed” always raises the question of “who made the design requirements that are being tested to or evaluated, the manufacturer of the battery or the engineer sizing the battery? The use of the term designed when discussing a battery’s ability to perform was incorrect because we did not differentiate between a performance test and a service test. The phrase “meets the design requirements” is used when discussing a service test which is a discharge test that measures a battery’s capability to meet a duty cycle which was designed by the person sizing the battery. However, when talking about a performance capacity test, the test is a measure of the currents or amp-hour discharge rates based on the battery manufacturer data for the station battery being tested. The term “manufactured” used in the tables avoids the confusion caused by the term “designed” and its application to service testing. Also, when discussing internal ohmic measurement trending, “manufactured” applies to establishing a set of base line values when compared to a battery of known capacity based on the manufacturer’s published data. When trending other measurable properties that assist in establishing aging, the battery manufacturer’s data are used as a basis for establishment of baseline values and therefore the use of “manufactured” avoids any ambiguity that might be caused by use of the term “designed”.

Individual

Bob Thomas

Illinois Municipal Electric Agency

No

Illinois Municipal Electric Agency supports comments submitted by Florida Municipal Power Agency. IMEA appreciates SDT efforts, and supports the overall refinements in PRC-005-2; however, the inconsistency between 4.2.1 and the FERC-approved interpretation of PRC-005-1b needs to be resolved to avoid confusion. This issue has implications for smaller entities in particular.

No

Illinois Municipal Electric Agency supports comments submitted by Florida Municipal Power Agency.

Group

PNGC Small Entity Comment Group

Ron Sporseen

Yes

Yes

The PNGC Small Entity Comment Group appreciates the hard work of the Standards Development Team on this difficult and complex project. However we are disappointed with the response to our concerns over the VSL matrix and although we believe on balance this should not be the sole reason for voting "no", we find it difficult to re-cast a "yes" vote and will therefore vote "abstain" to maintain the integrity of the quorum and reflect our position. Your response to our comment;"1. A smaller entity will have less to maintain in accordance with the standard; and, thus, the percentages are still appropriate." reflects a position that indicates are cursory and dismissive review of our concern. We would counter that because a smaller entity has less to maintain, a solely percentage violation measure is therefore inappropriate. We've appended our original comment below in addition to the SDT response. PNGC Comment: 1. The PNGC Comment Group takes issue with the associated VSLs for R3. For a small entity using a time based maintenance program, even one missed interval could be enough to elevate them to a high VSL despite the limited impact on the Bulk Electric System. Consider an entity with 9 total components within a specific Protection System Component Type. One violation would mean an 11% violation rate, enough to catapult them into a High VSL. Given the “NERC Guidance (Below), this seems to be a contradiction given the language of “…more than one”. a. NERC Guidance on VSL assignment: i. LOWER: Missing a minor element (or a small percentage) of the required performance ii. Modedrate: Missing at least one significant element (or a moderate percentage) of the required performance. iii. High: Missing more than one significant element (or is missing a high percentage) of the required performance or is missing a single vital component. iv. Severe: Missing most or all of the significant elements (or a significant percentage) of the required

performance. We suggest changing the language for “Lower VSL” for R3 to: For Responsible Entities with more than a total of 20 Components within a specific Protection System Component Type in Requirement R3, 5% or fewer have not been maintained… Or For Responsible Entities with a total of 20 or fewer Components within a specific Protection System Component Type, 2 or fewer Components in Requirement R3 have not been maintained… SDT response: 1. A smaller entity will have less to maintain in accordance with the standard; and, thus, the percentages are still appropriate.
Group
Tennessee Valley Authority
Dave Davidson
No
No
This comment is regarding the Implementation Plan for Requirements R3 and R4, 1. (page 3 of 5) of The Implementation Plan for Project 2007-17 Protection Systems Maintenance and Testing PRC-005-02. Number 1. states: For Protection System component maintenance activities with maximum allowable intervals of less than one (1) calendar year, as established in Tables 1-1 through 1-5: • The entity shall be 100% compliant with PRC-005-2 on the first day of the first calendar quarter eighteen (18) months following applicable regulatory approval, or in those jurisdictions where no regulatory approval is required, on the first day of the first calendar quarter thirty (30) months following NERC Board of Trustees adoption or as otherwise made effective pursuant to the laws applicable to such ERO governmental authorities. TVA Comment: Even though TVA has already started a plan to address this issue, it will take several years to implement automatic checkback on 541 carrier blocking sets on the TVA system. TVA performed quarterly testing from 2000 through 2007, then after data showed failures not attributed to signal margin, the test was changed to twice a year in 2008. TVA carrier failure rate has not increased since the frequency was changed in January 2008 from 4 tests/year to 2 test/year. We suggest a graduated implementation plan for this effort similar to number 3 (being compliant 30% in 24 months, 60% in 36 months, and 100% in 48 months) on Pages 3 and 4 of 5.
Individual
Travis Metcalfe
Tacoma Power
Yes
No
This is a follow-up question/comment from the previous round of balloting; please see the part in all capitals. It is still unclear whether Section 15.3 permits periodically verifying DC voltage at the actuating device trip terminals as an acceptable method of accomplishing the maintenance activity identified in Table 1-5 for unmonitored control circuitry associated with protective functions IF DC VOLTAGE IS VERIFIED AT EACH APPLICABLE SET OF ACTUATING DEVICE TRIP TERMINALS SO THAT EVERY TRIP PATH IS ADDRESSED. It is recommended that this approach be considered acceptable, provided that auxiliary relays are operated within the maximum maintenance interval. In Table 1-2, does the ‘channel’ include the communication interface/driver that is part of the end device?
Individual
Jonathan Meyer
Idaho Power Company
Yes
No
No additional comments.
Individual
Stephen J. Berger

PPL Generation, LLC on behalf of its Supply NERC Registered Entities
No
See Question 3 Comments
No
See Question 3 Comments
PPL Generation, LLC thanks the SDT for there effort on this latest version of the standard and has voted affirmatively. We offer the following comments/suggestions: 1.) PPL Generation, LLC would like more direction on how the Tables 1-3 are to be interpreted. Under the left column “Component Attributes,” it is not completely clear as to which situation is applicable in order to know what “Maintenance Activity” applies. Either the table's "Component attributes" or the statement “Include the applicable monitored Component attributes applied to each Protection System Component Type consistent with the maintenance intervals specified in Tables 1-1 through 1-5, Table 2, and Table 3 where monitoring is used to extend the maintenance intervals beyond those specified for unmonitored Protection System Components” could be more prescriptive on the specific component attributes to provide entities direction as to when exactly each table is to be followed. 2.) In regards to Unresolved Maintenance Issues, PPL Generation, LLC is concerned with the use of the word “efforts” in regards to the use in “shall demonstrate efforts” in Requirement 5. We suggest that either a formal definition of “effort” is provided or more clarity is added in the Requirement 5, shown below, that gives a quantitative scale of what constitutes an effort. “Each Transmission Owner, Generator Owner, and Distribution Provider shall demonstrate efforts to correct identified Unresolved Maintenance Issues.” In its current form, “efforts” can be broadly interpreted by auditors as any number of different required actions of an entity and could potentially lead to inconsistencies in applying the term throughout the regions.
Group
Luminant
Brenda Hampton
Yes
Yes
The testing of non-BES breakers for plants should be discussed in the FAQ using the similar application for Distribution Providers. Luminant recommends a section for Generation Owners that describes what Elements (circuit breakers) should be tested. Luminant strongly believes that there is no additional benefit to the BES by requiring the GO to test the non-BES breakers (UAT low side and generator field breakers). These circuits are radial fed.
In addition to the revised Supplemental Reference and FAQ guide revision requested in question 2, Luminant recommends that Table 1-5; Line 1 and 4 be revised to specifically state that only BES elements (circuit breakers/interrupting devices) are to be tested. There is no benefit to the BES system for testing the non-BES breakers and some locations, trip testing of the breakers would cause a unit black-out due to unit design. Some units do not have start-up transformers. By performing these tests, there is a risk of causing unit damage while the unit is off-line. Therefore Luminant recommends that Table 1-5 be revised to only require BES breakers be tested for compliance purposes. This would be consistent with the requirements covered in Table 3 for UFLS Systems.
Group
Western Area Power Administration
Brandy A. Dunn
No
The Standard Drafting Team has made changes to the battery maintenance tables 1-4 (a-f) that does not reflect the extensive re-wording of the Supplemental Reference/FAQ document or address the posted recommendations of IEEE Battery Task Force. The industry needs clear, concise maintenance tasks, intervals and standards for their maintenance programs that are developed and tested by industry experts such as IEEE and EPRI.
Yes
Western Area Power Administration is appreciative of the hard work done by the SDT and NERC. We respectfully submit that the Supplementary Reference and FAQ Document should: 1. Offer guidance

on establishing baselines for older battery banks 2. Be in agreement with IEEE standards for battery maintenance 3. Replace the existing CANS
Western Area Power Administration is appreciative of the hard work done by the SDT and NERC. We respectfully submit our professional opinion that the increased relay testing required by the PRC-005-2 will result in a net degradation to the reliability of the BES due to human hands disturbing working systems. We propose that auxiliary relays be tested at commissioning and anytime the circuits are rewired or redesigned. If there is evidence that the relay has functioned properly in its current configuration then the best practice for insuring reliability is to leave it alone. The maintenance interval of 6 years for lock-out relay testing is not consistent with 12 year interval of auxiliary relay testing or control circuit testing. No justification is provided for this increased testing interval of lock-out relays versus other electro-mechanical devices. These inconsistent testing intervals, within the same protection control schemes and protective devices, will complicate the industry's Protection System Maintenance Program and cause an increase in maintenance costs. Condition Based Monitoring or Performance Based Monitoring are not allowed on trip coil circuits or lock-out relays. This is inconsistent with current or future technology. Deviation from the 6 year testing interval should be allowed, using CBM or PBM. The Standard should not present a barrier to technology advancements or industry initiatives. The continuous, frequent testing of these devices is detrimental to system reliability. Disagree with testing of the dc control portion of the sudden pressure device as defined by the FAQ. We feel that this device and its wiring were deemed out of scope previously.
Individual
Andrew Z. Pusztai
American Transmission Company, LLC
Yes
Yes
ATC recommends that the SDT change the text of “Standard PRC-005-2 – Protection System Maintenance” Table 1-5 on page 24, Row 1, Column 3 to: “Verify that a trip coil is able to operate the circuit breaker, interrupting device, or mitigating device.” Or alternately, “Electrically operate each interrupting device every 6 years” Basis for the change: Trip coils are designed to be energized no longer than the breaker opening time (3-5 cycles). They are robust devices that will successfully operate the breaker for 5,000-10,000 electrical operations. In addition, many utilities purchase breakers with dual redundant trip coils to mitigate the possibility of a failure. It is well recognized that the most likely source of trip coil failure is the breaker operating mechanism binding, thereby preventing the breaker auxiliary stack from opening and keeping the trip coil energized for too long of a time period. Therefore, trip coil failure is a function of the breaker mechanism failure. Exercising the breakers and circuit switchers is an excellent practice to mitigate the most prevalent cause of breaker failure. ATC would encourage language that would suggest this task be done every 2 years, not to exceed 3 years. Exercising the interrupting devices would help eliminate mechanism binding, reducing the chance that the trip coils are energized too long. The language, as currently written in Table 1-5 row 1, will also have the unintentional effect of changing an entities existing interrupting device maintenance interval (essentially driving interrupting device testing to a less than 6 year cycle). ATC continues to recommend a negative ballot since we believe that the testing of “each” trip coil will result in the increased amount of time the BES is in a less intact system configuration. ATC hopes that the SDT will consider these changes.
Individual
Martin Bauer
US Bureau of Reclamation
Yes
Yes
The FAQ should clarify why a the requirement for a "Summary of maintenance and testing procedures" developed by an entity is concidered prescribing a methodology to meet those requirements. The entity is developing the methodology for meeting the requirements that the elements be maintained.

The reliability level for protection systems has been lowered by elimintating the requirement for entity defined maintenance and testing procedures. Currently the draft only prescribes that the elements are indentified as to when they will be maintained. The FAQ suggested that the PRC-005 did not have sufficient specificity with regard to the PSMP requirement. The entity no longer must be able to document that they were maintained in accordance with any prescribed method, jus tthat they were maintained in accordnace within an acceptable interval. Second, the measure for R1 does not specificy what evidence is considered acceptable. This makes the standard hard to enforce.

Group

Florida Municipal Power Agency

Frank Gaffney

The SDT is still not agreeing with the applicability as interpreted and approved by FERC PRC-005-1b Appendix 1 that basically says that applicable Protection Systems are those that protect a BES Element AND trip a BES Element. The interpretation states: In these two standards, use of the phrase transmission Protection System indicates that the requirements using this phrase are applicable to any Protection System that is installed for the purpose of detecting faults on transmission elements (lines, buses, transformers, etc.) identified as being included in the Bulk Electric System (BES) and trips an interrupting device that interrupts current supplied directly from the BES. The SDT continues to ignore this FERC approved interpretation, and this omission causes us to vote Negative again. The basic issue is that some distribution protection will be swept in with the applicability of the standard, which states: 4.2.1 Protection Systems that are installed for the purpose of detecting Faults on BES Elements (lines, buses, transformers, etc.) Many (most) network distribution systems that have more than one source into a distribution network will have reverse power relays to detect faults on the BES and trip the step-down transformer to prevent feedback from the distribution to the fault on the BES. This is not a BES reliability issue, but more of a safety issue and distribution voltage issue. These relays would be subject to the standard as the applicability is currently written, but, should not be and they are currently not within the scope of PRC-005-1b Appendix 1 because the step-down transformer (non-BES) is tripped and not a BES Element (hence, the "and" condition of the interpretation is not met). There are many other related examples of distribution that might be networked or have distributed generation on a distribution circuit where such reverse power relays, or overcurrent relays with low pick-ups, are used for safety and distribution voltage control reasons and are not there for BES Reliability. To make matters worse, for these Reverse Power relays, it is pretty much impossible to meet PRC-023 because the intent of the relay is to make current flow unidirectional (e.g., only towards the distribution system) without regard for the rating of the elements feeding the distribution network. So, if these relays are swept in, and if they are on elements > 200 kV, then the entity would not be able to meet PRC-023 as that standard is currently written. So, the SDT should have adopted the FERC approved interpretation. We have made this recommendation several times before.

Individual

Darryl Curtis

Oncor Electric Delivery

Yes

Yes

On Page 81 of the Supplementary reference and FAQ Draft it appears that the drafting team changed the term “designed” to “manufactured” and then used the quotation from the previous standard’s Table 1-4(b). Oncor recommends that the two statements on page 81 of the Supplementary Reference and FAQ – Draft be changed from the present version “…verify that the station battery can perform as manufactured by evaluating the measured cell/unit internal ohmic values to station battery baseline.” “Verify that the station battery can perform as manufactured by conducting a performance, service, or modified performance capacity test of the entire battery bank.” to a new version of the quotes based on the new version of Table 1-4(b). The new quotes should be stated as follows: “…verify that the station battery can perform as manufactured by evaluating cell/unit measurements indicative of battery performance (e.g. internal ohmic values or float current) against the station battery baseline.” “Verify that the station battery can perform as manufactured by

conducting a performance or modified performance capacity test of the entire battery bank.”
On Page 89 of the Supplementary reference and FAQ Draft document on the References page (reference #12) the correct number of the standard should read “Std 450-2010” instead of “Std 45-2010.”
Individual
d mason
HHWP
no comment
no comment
VSL should not be a function of "specific Protection System Component Type". VSL should look at percentage of TOTAL Protection System Components that were not tested within scheduled test date. Consider the entity with 400 Protection System Components, including 2 station battery systems. If that entity completed 399 of 400 tests within schedule and missed 1 battery test, the VSL would be high or severe. Alternatively, if the entity completed 399 of 400 tests , but the missed test was one of 200 protective relays, the VSL would be low. There is no assurance though that the missed battery test resulted in higher risk for the BES than the missed protective relay test. As a result the relationship between VSL and the degree of violation severity lacks predictability.
Individual
Tony Kroskey
Brazos Electric Power Cooperative
Yes
Please see the formal comments submitted by ACES Power Marketing.
Yes
Please see the formal comments submitted by ACES Power Marketing.
Please see the formal comments submitted by ACES Power Marketing.
Individual
Alice Ireland
Xcel Energy
Yes
Yes
The following paragraph from the top of page 71 in the FAQ should be retained. When internal ohmic measurements are taken, consistent test equipment should be used to establish the baseline and used for the future trending of the cells internal ohmic measurements because of variances in test equipment and the type of ohmic measurement used by different manufacturer’s equipment. Keep in mind that one manufacturer’s “Conductance” test equipment does not produce similar results as another manufacturer’s “Impedance” test equipment, even though both manufacturers have produced “Ohmic” test equipment. This paragraph from page 78 (second full paragraph) should be stricken or re written. Consistency is the key when measuring and evaluating ohmic readings. Consistent testing methods by trained personnel are essential. Moreover, it is absolutely critical that personnel use the same make/model of test instrument every time readings are taken if the values are going to be compared. The type of probe, the location of the reading (post, connector, etc.) and the room temperature during the test needs to be carefully recorded when the readings are taken. For every subsequent time the readings are taken, the same make/model of the test instrument must be used, the same type of probes must be used, and the location of the reading must be the same. The first paragraph explain the consistency issue and the second then removes the ability to use consistent equipment and rather demands that identical equipment be used. This is not a feasible position as manufacturers can and do leave the testing space and therefore the entity should be cognizant of using the appropriate compatible test equipment but to spell out that particular make/models be maintained is not acceptable and brushes against anti-trust complications by inhibiting new players in this testing space.
Individual

Brett Holland
Kansas City Power & Light
Yes
No
No other comments.
Individual
William Cantor
TPI
No
See IEEE Stationary Battery Committee Letter dated 23 March 2012
Yes
Page 81...this statement is incorrect and should be changed: "A comparison and trending against the baseline new battery ohmic reading can be used in lieu of capacity tests to determine remaining battery life." "can be used" has to be changed to "may be used". This should refer to the other FAQ to fully explain how to use ohmic measurements. Page 81...25% is not a universally accepted value. This value has to be determined by experience for a particular type/model of battery. This part of the FAQ contradicts other FAQs.
Group
Colorado Springs Utilities
Jennifer Eckels
Yes
No
Colorado Springs Utilities votes "negative" based on the document "Draft SAR for Phase 2 of Project 2007-17" under the section titled Brief Description of Proposed Standard Modifications/Actions, which states " The Standard Drafting Team shall modify NERC Standard PRC-005-2 to add reclosing relays to the standard. In order to do so, the definition of Protection System shall be revised to include reclosing relays, the Facilities portion of the Applicability of the Standard shall be revised to describe those reclosing relays that are included within the standard, and appropriate minimum maintenance intervals (with maximum allowable intervals) shall be added to the standard. The Standard Drafting Team shall also make any other changes that are necessary to explicitly address reclosing relays, but shall not make general revisions to the standard, either in content or arrangement." Colorado Springs Utilities position is reclosing relays are used as part of the system restoration process, and should not be associated with the protection or reliability of the system. Reclosing relays should be grouped with SCADA controls of breakers and manual controls of breakers, and should be tested with the same frequency. Breaker reclosing is not used on many lines, and is disabled on many lines. Automatic Breaker Reclosing is a system enhancement, not a system requirement.

Consideration of Comments

Protection System Maintenance and Testing - Project 2007-17

The Protection System Maintenance and Testing Drafting team thanks all commenters who submitted comments on the 3rd draft of the standard for Protection System Maintenance. These standards were posted for a 30-day public comment period from June 18, 2012 through June 27, 2012. Stakeholders were asked to provide feedback on the standards and associated documents through a special electronic comment form. There were 51 sets of comments, including comments from approximately 170 different people from approximately 110 companies representing all 10 Industry Segments as shown in the table on the following pages.

All comments submitted may be reviewed in their original format on the standard's project page:

http://www.nerc.com/filez/standards/Protection_System_Maintenance_Project_2007-17.html

If you feel that your comment has been overlooked, please let us know immediately. Our goal is to give every comment serious consideration in this process! If you feel there has been an error or omission, you can contact the Vice President of Standards and Training, Herb Schrayshuen, at 404-446-2560 or at herb.schrayshuen@nerc.net. In addition, there is a NERC Reliability Standards Appeals Process.[1]

Summary Consideration of all Comments Received:

Definitions:

No changes were made to the Definitions.

Applicability:

No changes were made to the Applicability.

Requirements:

No changes were made to the Requirements.

Tables

In Table 1-2, the interval for the second portion of the first row of the table was changed from 12 years to 6 years. Also, in Table 1-2, "channels" was modified to "communications systems" in two locations,

[1] The appeals process is in the Standard Processes Manual: http://www.nerc.com/files/Appendix_3A_StandardsProcessesManual_20120131.pdf

and the Component Attributes in the last row were modified to clarify that all attributes must be present to use the associated intervals and activities.

Editorial changes were made to Tables 1-4c, 1-4d., and 1-4e. The words "Protection System" were added to the headers of Tables 1-4c and 1-4d; in Table 1-4e, a redundant "only" was removed.

No additional changes were made to the Tables.

Measures

No changes were made to the Measures.

VRFs and VSLs

No changes were made to the VRFs and VSLs.

Version History

The Version History was updated to reflect the latest approved version of PRC-005.

Implementation Plan

The Implementation Plan was revised to retire the four legacy standards upon full implementation of PRC-005-2 rather than upon the Effective Date. Clarifying language was added to address this change.

Supplementary Reference and FAQ Document

Numerous changes, both technical and editorial, were made throughout the Supplementary Reference and FAQ.

Mapping Document

Minor clarifying changes were made to the Mapping Document.

Index to Questions, Comments, and Responses

1. In response to stakeholder input, the SDT made several changes to the standard and associated definitions as detailed below: 11

2. The SDT made complementary changes in the "Supplementary Reference and FAQ Document" to provide supporting discussion for the Requirements within the standard. Do you have any specific suggestions for further improvements? 24

3. If you have any other comments that you have NOT provided in response to the above questions, please provide them here. (Please do not repeat comments that you provided elsewhere.)41

The Industry Segments are:

1 — Transmission Owners
2 — RTOs, ISOs
3 — Load-serving Entities
4 — Transmission-dependent Utilities
5 — Electric Generators
6 — Electricity Brokers, Aggregators, and Marketers
7 — Large Electricity End Users
8 — Small Electricity End Users
9 — Federal, State, Provincial Regulatory or other Government Entities
10 — Regional Reliability Organizations, Regional Entities

Group/Individual		Commenter	Organization	Registered Ballot Body Segment									
				1	2	3	4	5	6	7	8	9	10
1.	Group	Guy Zito	Northeast Power Coordinating Council										X

	Additional Member	Additional Organization	Region	Segment Selection
1.	Alan Adamson	New York State Reliability Council, LLC	NPCC	10
2.	Greg Campoli	New York Independent System Operator	NPCC	2
3.	Sylvain Clermont	Hydro-Quebec TransEnergie	NPCC	1
4.	Chris de Graffenried	Consolidated Edison Co. of New York, Inc.	NPCC	1
5.	Gerry Dunbar	Northeast Power Coordinating Council	NPCC	10
6.	Mike Garton	Dominion Resources Services, Inc.	NPCC	5
7.	Kathleen Goodman	ISO - New England	NPCC	2
8.	Michael Jones	National Grid	NPCC	1
9.	David Kiguel	Hydro One Networks Inc.	NPCC	1
10.	Michael R. Lombardi	Northeast Utilities	NPCC	1

Group/Individual	Commenter	Organization	Registered Ballot Body Segment									
			1	2	3	4	5	6	7	8	9	10

11.	Randy MacDonald	New Brunswick Power Transmission	NPCC	9
12.	Bruce Metruck	New York Power Authority	NPCC	6
13.	Silvia Parada Mitchell	NextEra Energy, LLC.	NPCC	5
14.	Lee Pedowicz	Northeast Power Coordinating Council	NPCC	10
15.	Robert Pellegrini	The United Illuminating Company	NPCC	1
16.	Si Truc Phan	Hydro-Quebec TransEnergie	NPCC	1
17.	David Ramkalawan	Ontario Power Generation, Inc.	NPCC	5
18.	Brian Robinson	Utility Services	NPCC	8
19.	Michael Schiavone	National Grid	NPCC	1
20.	Wayne Sipperly	New York Power Authority	NPCC	5
21.	Tina Teng	Independent Electricity System Operator	NPCC	2
22.	Doanld Weaver	New Brunswick System Operator	NPCC	2
23.	Ben Wu	Orange and Rockland Utilities	NPCC	1
24.	Peter Yost	Consolidated Edison Co. of New York, Inc.	NPCC	3

2.	Group	Chris Higgins	Bonneville Power Administration	X		X		X	X				

	Additional Member	Additional Organization	Region	Segment Selection
1.	Fred	Bryant	WECC	1
2.	Jason	Burt	WECC	1
3.	Brenda	Vasbinder	WECC	1
4.	Heather	Laslo	WECC	1

3.	Group	Nick Wehner	ACES Power Marketing Standards Collaborators	X		X	X	X					

	Additional Member	Additional Organization	Region	Segment Selection
1.	Ashley Gonyer	East Kentucky Power Cooperative	SERC	1, 3, 5
2.	John Shaver	Arizona Electric Power Cooperative	WECC	1, 4, 5
3.	John Shaver	Southwest Transmission Cooperative, Inc.	WECC	1, 4, 5
4.	Mark Ringhausen	Old Dominion Electric Cooperative	SERC	3, 4
5.	Mohan Sachdeva	Buckeye Power, Inc.	RFC	3, 4
6.	Scott Brame	North Carolina Electric Membership Corporation	RFC	1, 3, 4, 5

4.	Group	Jesus Sammy Alcaraz	Imperial Irrigation District (IID)	X		X	X	X	X				

	Additional Member	Additional Organization	Region	Segment Selection

Group/Individual	Commenter	Organization	Registered Ballot Body Segment									
			1	2	3	4	5	6	7	8	9	10
1. Epifanio Martinez, IID, WECC, 1, 3, 4, 5, 6 2. Nando Gutierrez, IID, WECC, 1, 3, 4, 5, 6 3. Tony Allegranza, IID, WECC, 1, 3, 4, 5, 6 4. Jose Landeros, IID, WECC, 1, 3, 4, 5, 6												
5. Group	Greg Rowland	Duke Energy	X		X		X	X				
Additional Member / Additional Organization / Region / Segment Selection 1. Doug Hils, Duke Energy, RFC, 1 2. Ed Ernst, Duke Energy, SERC, 3 3. Dale Goodwine, Duke Energy, SERC, 5 4. Greg Cecil, Duke Energy, RFC, 6												
6. Group	Will Smith	MRO NSRF	X	X	X	X	X	X	X			
Additional Member / Additional Organization / Region / Segment Selection 1. MAHMOOD SAFI, OPPD, MRO, 1, 3, 5, 6 2. CHUCK LAWRENCE, ATC, MRO, 1 3. TOM WEBB, WPS, MRO, 3, 4, 5, 6 4. JODI JENSON, WAPA, MRO, 1, 6 5. KEN GOLDSMITH, ALTW, MRO, 4 6. ALICE IRELAND, XCEL, MRO, 1, 3, 5, 6 7. DAVE RUDOLPH, BEPC, MRO, 1, 3, 5, 6 8. ERIC RUSKAMP, LES, MRO, 1, 3, 5, 6 9. JOE DEPOORTER, MGE, MRO, 3, 4, 5, 6 10. SCOTT NICKELS, RPU, MRO, 4 11. TERRY HARBOUR, MEC, MRO, 3, 5, 6, 1 12. MARIE KNOX, MISO, MRO, 2 13. LEE KITTELSON, OTP, MRO, 1, 3, 4, 5 14. SCOTT BOS, MPW, MRO, 1, 3, 5, 6 15. TONY EDDLEMAN, NPPD, MRO, 1, 3, 4 16. MIKE BRYTOWSKI, GRE, MRO, 1, 3, 5, 6 17. DAN INMAN, MPC, MRO, 1, 3, 5, 6												
7. Group	Jonathan Hayes	Southwest Power Pool NERC Reliability Standards Development Team	X	X	X	X	X	X				

Group/Individual	Commenter	Organization	Registered Ballot Body Segment									
			1	2	3	4	5	6	7	8	9	10

	Additional Member	Additional Organization	Region	Segment Selection
1.	Jonathan Hayes	Southwest Power Pool	SPP	NA
2.	Robert Rhodes	Southwest Power Pool	SPP	NA
3.	Paul Abel	Oklahoma gas and electric	SPP	1, 3, 5
4.	John Allen	City Utilities of springfield	SPP	1, 4
5.	Bud Averill	Grand River Dam Authority	SPP	1, 3, 5
6.	Clem Cassmeyer	Western Farmers Electric Cooperative	SPP	1, 3, 5
7.	Paul Cox	GDS Associates	SPP	NA
8.	Willy Haffecke	City Utilities of springfield	SPP	1, 4
9.	Julie Lux	Westar Energy inc.	SPP	1, 3, 5, 6
10.	Mahmood Safi	OPPD	MRO	1, 3, 5
11.	Sean Simpson	Board of public utilities of kansas city, kansas	SPP	NA
12.	Louis Guidry	CLECO	SPP	1, 3, 5
13.	Lindsay Sheppard	Sunflower Electric Corporation	SPP	1
14.	Steve McGie	Coffeyville	SPP	NA

8.	Group	Sam Ciccone	FirstEnergy	X		X	X	X	X				

	Additional Member	Additional Organization	Region	Segment Selection
1.		M. Ferncez	FE	RFC
2.		T. Sheerer	FE	RFC
3.		D. Hohlbaugh	FE	RFC
4.		B. Orians	FE	RFC
5.		J. Chmura	FE	RFC
6.		L. Lee	FE	RFC
7.		R. Loy	FE	RFC
8.		B. Duge	FE	RFC

9.	Group	Mike Garton	Dominion	X		X		X	X				

	Additional Member	Additional Organization	Region	Segment Selection
1.	Louis Slade	Dominion Resources Services, Inc.	RFC	5, 6
2.	Randi Heise	Dominion Resources Services, Inc.	MRO	5, 6
3.	Connie Lowe	Dominion Resources Services, Inc.	NPCC	5, 6

Group/Individual		Commenter	Organization	Registered Ballot Body Segment									
				1	2	3	4	5	6	7	8	9	10
4. Michael Crowley		Dominion Virginia Power	SERC 1, 3, 5, 6										
10.	Group	Pawel Krupa	Seattle City Light Operations										

	Additional Member	Additional Organization	Region	Segment Selection
1.	Pawel Krupa	Seattle City Light	WECC	1
2.	Dana Wheelock	Seattle City Light	WECC	3
3.	Hao Li	SCL	WECC	4

11.	Group	Ron Sporseen	PNGC Small Entity Comment Group	X		X					X		

	Additional Member	Additional Organization	Region	Segment Selection
1.	Joe Jarvis	Blachly-Lane Electric Cooperative	WECC	3
2.	Dave Markham	Central Electric Cooperative	WECC	3
3.	Dave Hagen	Clearwater Power Company	WECC	3
4.	Roman Gillen	Consumer's Power Inc.	WECC	1, 3
5.	Roger Meader	Coos-Curry Electric Cooperative	WECC	3
6.	Bryan Case	Fall River Electric Cooperative	WECC	3
7.	Rick Crinklaw	Lane Electric Cooperative	WECC	3
8.	Annie Terracciano	Northern Lights Inc.	WECC	3
9.	Aleka Scott	PNGC Power	WECC	4
10.	Heber Carpenter	Raft River Electric Cooperative	WECC	3
11.	Steve Eldrige	Umatilla Electric Cooperative	WECC	1, 3
12.	Marc Farmer	West Oregon Electric Cooperative	WECC	4
13.	Margaret Ryan	PNGC Power	WECC	8

12.	Group	Dave Davidson	Tennessee Valley Authority					X				

	Additional Member	Additional Organization	Region	Segment Selection
1.	Rusty Hardison	TOM Support	SERC	1
2.	Pat Caldwell	TOM Support	SERC	1
3.	David Thompson	TVA Compliance	SERC	5
4.	Jerry Finley	Rel&Eng Engeering Stdrs	SERC	1
5.	Robert Brown	TVA Generation - Nuclear	SERC	5
6.	Tom Vandervort	TVA Generation - Fossil	SERC	5
7.	Annette Dudley	TVA Generation - Hydro	SERC	5

13.	Group	Brenda Hampton	Luminant						X			

Group/Individual		Commenter	Organization	Registered Ballot Body Segment									
				1	2	3	4	5	6	7	8	9	10
Additional Member	**Additional Organization**	**Region**	**Segment Selection**										
1. Mike Laney	Luminant Generation Company LLC	ERCOT	5										
14.	Group	Frank Gaffney	Florida Municipal Power Agency	X		X	X	X	X				
Additional Member	**Additional Organization**	**Region**	**Segment Selection**										
1. Timothy Beyrle	City of New Smyrna Beach	FRCC	4										
2. Jim Howard	Lakeland Electric	FRCC	3										
3. Greg Woessner	Kissimmee Utility Authority	FRCC	3										
4. Lynne Mila	City of Clewiston	FRCC	3										
5. Joe Stonecipher	Beaches Energy Services	FRCC	1										
6. Cairo Vanegas	Fort Pierce Utility Authority	FRCC	4										
7. Randy Hahn	Ocala Utility Services	FRCC	3										
15.	Group	Jennifer Eckels	Colorado Springs Utilities	X		X		X	X				
Additional Member	**Additional Organization**	**Region**	**Segment Selection**										
1. Charles Morgan	Colorado Springs Utilities	WECC	3										
2. Lisa Rosintoski	Colorado Springs Utilities	WECC	6										
3. Paul Morland	Colorado Springs Utilities	WECC	1										
16.	Individual	Jim Eckelkamp	Progress Energy	X		X		X	X				
17.	Individual	Cole Brodine	Nebraska Public Power District	X		X		X					
18.	Individual	Sandra Shaffer	PacifiCorp	X		X		X	X				
19.	Individual	Antonio Grayson	Southern Company	X		X		X	X				
20.	Individual	Brandy A. Dunn	Western Area Power Administration	X					X				
21.	Individual	Michelle D'Antuono	Ingleside Cogeneration LP					X					
22.	Individual	Michael Falvo	Independent Electricity System Operator		X								
23.	Individual	Jennifer Wright	San Diego Gas & Electric	X		X		X					
24.	Individual	Dale Dunckel	Public Utility District No. 1 of Okanogan County	X									
25.	Individual	Joe Petaski	Manitoba Hydro	X		X		X	X				
26.	Individual	Kenneth A Goldsmith	Alliant Energy				X						
27.	Individual	Thad Ness	American Electric Power	X		X		X	X				

Group/Individual		Commenter	Organization	Registered Ballot Body Segment									
				1	2	3	4	5	6	7	8	9	10
28.	Individual	Ed Davis	Entergy Services	X		X		X	X				
29.	Individual	Anthony Jablonski	ReliabilityFirst										X
30.	Individual	Maggy Powell	Exelon Corporation and its affiliates	X		X		X	X				
31.	Individual	Eric Salsbury	Consumers Energy			X	X	X					
32.	Individual	Chris Searles	BAE Batteries USA							X	X		
33.	Individual	Kevin Luke	Georgia Transmission Corporation	X									
34.	Individual	Brad Harris	CenterPoint Energy										
35.	Individual	Steven Wallace	Seminole Electric Cooperative, Inc	X			X	X	X				
36.	Individual	Kirit Shah	Ameren	X		X		X	X				
37.	Individual	Laurie Williams	Public Service Company of New Mexico	X		X		X	X				
38.	Individual	Steve Alexanderson P.E.	Central Lincoln			X	X					X	
39.	Individual	Wayne E. Johnson	EPRI										
40.	Individual	Bob Thomas	Illinois Municipal Electric Agency				X						
41.	Individual	Travis Metcalfe	Tacoma Power	X		X	X	X	X				
42.	Individual	Jonathan Meyer	Idaho Power Company	X		X							
43.	Individual	Stephen J. Berger	PPL Generation, LLC on behalf of its Supply NERC Registered Entities					X					
44.	Individual	Andrew Z. Pusztai	American Transmission Company, LLC	X									
45.	Individual	Martin Bauer	US Bureau of Reclamation					X					
46.	Individual	Darryl Curtis	Oncor Electric Delivery	X									
47.	Individual	d mason	HHWP	X				X					
48.	Individual	Tony Kroskey	Brazos Electric Power Cooperative	X									
49.	Individual	Alice Ireland	Xcel Energy	X		X		X	X				
50.	Individual	Brett Holland	Kansas City Power & Light	X		X		X	X				
51.	Individual	William Cantor	TPI										

1. **In response to stakeholder input, the SDT made several changes to the standard and associated definitions as detailed below:**
   - **Revised the "Inspect" element of the definition of Protection System Maintenance Program (PSMP), the definition of the term Unresolved Maintenance Issues, and the definition of the term Countable Event.**
   - **Revised Clause 4.2.5.4 of the Applicability section of the standard.**
   - **Revised Table 1-2 "Component Type - Communications Systems."**
   - **Revised Tables 1-4a, 1-4b, 1-4c, 1-4d, and 1-4f "Component Type - Protection System Station dc Supply…."**

   Do you agree with these changes? If not, please indicate which changes you do not agree with and provide specific suggestions in the comment area for improvements that would allow you to support the standard.

Summary Consideration:

Some commenters continued to object to various activities and/or intervals within the tables. The drafting team made several changes detailed below in response to these comments.

1. One interval was changed – the interval for the activity in Table 1-2 for unmonitored communications systems was changed from 12 years back to 6 years as it had been in all previous postings. This change promotes consistency with similar activities within Table 1-1 (Protective Relays).
2. The language in two activities in Table 1-2 was changed from "channels" to "communications systems".
3. The language in the Component Attributes in the last row of Table 1-2 was modified to read: "Any communications system with all of the following:" to clarify that all must be present to use the related intervals and activities.
4. In Table 1-4e, a redundant "only" was removed from the Component Attributes in the last row.

A few commenters continued to contrast the Applicability (4.2.1) with the Interpretation represented in PRC-005-1b. The drafting team responded, but no changes were made.

Several comments were offered on the informational posting of the draft SAR to revise PRC-005-2 to add reclosing relays. The drafting team responded, but no changes were made.

Organization	Yes or No	Question 1 Comment

Organization	Yes or No	Question 1 Comment
Bonneville Power Administration	No	1. BPA believes the term communications system and channel needs to be clarified as to whether the intent is the communications system, a channel on the telecommunication channel, the teleprotection channel, or the teleprotection function. 2. A. Minimum battery maintenance interval is to assure that the battery plant will perform as needed, and obtain a reasonable confidence that it will continue acceptable performance until the next maintenance evaluation. Typically, any utility VLA battery application, steady state float charge/long duration discharge, a Monthly or Quarterly maintenance is excessive given a proper design/maintenance program (IEEE 450, 484, 485). There is a 60 year proven history of this. BPA recognizes that there will be specific VLA battery installations that will be required beyond this minimum. BPA recommends rolling the 4 month maintenance into the 18 month maintenance schedule. B. The scientific vetted method of determining a VLA batteries current performance, and projected performance, is a capacity test. This has been scientifically verified at least 10 times since 1919, with consistent results. This approach is consistent with the IEEE 450, as well as many other standards, and is supported by the industry. If an alternate approach using measured parameters to predict current and future battery performance is to be allowed, then it must assure the same result. C. Battery monitoring does enable measurements to be made automatically with greater frequency. Additionally it provides the ability to collect, store, report, and analyze data from the battery even during an outage. It does not mitigate the necessity to perform battery maintenance. If battery monitoring is performed mandatory maintenance should also be required on the monitor.
Response: Thank you for your comments.		

Organization	Yes or No	Question 1 Comment
1. The SDT has modified "channel" to "communications system" in Table 1-2 in response to your comment. Discussion was also added to Section 15.5.1 of the Supplementary Reference and FAQ Document to explain "channel". 2. See below: A. The drafting team disagrees with your assertion that the 4 month interval should be extended to the 18 month maintenance schedule for performance of maintenance activities. The 18 month maximum maintenance interval for the unmonitored VLA battery used in a Protection System station dc supply is too long for verification that there is any voltage on the dc supply, that each cell of the unmonitored station battery is inspected to see that it has electrolyte in it, or that the unmonitored dc supply is inspected for unintentional dc grounds. B. The drafting team agrees with you that the performance capacity test is a well proven method to determine the capacity of a station battery and provides an indication of the health of the battery. However, there are other measurements that are indicative of battery health and performance that when trended to the station battery baseline and examined along with the other maintenance activities required in Table 1-4 of the standard can indicate that station battery can perform as manufactured. By trending periodically measured properties indicative of battery performance while serving its Protection System, the Transmission Owner, Generator Owner or Distribution Provider can develop a condition based method to determine (1) when a station battery requires a capacity test (instead of performing a capacity test on a predetermined, prescribed interval), (2) when an individual cell or battery unit should be replaced, or (3) if the station battery should be replaced without performing a capacity test, based on the analysis of the trended data. C. The drafting team agrees that, "battery monitoring does enable measurements to be made automatically with greater frequency. Additionally it provides the ability to collect, store, report, and analyze data from the battery even during an outage." Besides these positive qualities it alleviates the necessity to physically perform - in the station - most of the battery maintenance activities listed in Table 1-4 (see Table1-4 (f)). However, the inspection of the battery, its cells and the physical condition of the battery rack are mandatory maintenance activities that must be performed by the maintenance workforce at the station or via remote control. Concerning the maintenance of the monitoring system, please refer to Table 2 (Alarming Paths and Monitoring) of the standard for the mandatory maintenance that is required on the monitor.		
Imperial Irrigation District (IID)	No	IID does not agree with the proposed changes to the definition of Inspect using the word Examine and suggests using Visual Examination instead.
Response: Thank you for your comments. The SDT believes the word 'Examine' is correct.		

Organization	Yes or No	Question 1 Comment
Western Area Power Administration	No	The Standard Drafting team has made changes to the battery maintenance tables 1-4 (a-f) that does not reflect the extensive re-wording of the Supplemental Reference/FAQ document or address the posted recommendations of IEEE Battery Task Force. The industry needs clear, concise maintenance tasks, intervals and standards for their maintenance programs that are developed and tested by industry experts such as IEEE and EPRI.
Response: Thank you for your comments. The changes to maintenance tables 1-4 (a-f) were made as a result of conversations with members of the IEEE Battery Task Force and their recommendations to the drafting team. The drafting team disagrees with the assertion that the changes to the tables do "not reflect the extensive re-wording of the Supplementary Reference and FAQ document." The drafting team considered the IEEE Battery Task Force Recommendations and revised the Standard with the assistance of several of their members (see the drafting team response posted on the NERC site). The drafting team believes that the Component Attributes, Maximum Maintenance Intervals and Maintenance Activities of Table 1-4 are clear and concise. If an owner has a question concerning how to perform any maintenance activity listed in the table, the Supplementary reference and FAQ document along with IEEE and EPRI documents provide unambiguous and succinct examples of how to perform the activity. This standard is not intended to instruct the Transmission Owners, Generator Owners or Distribution Providers on how to perform the minimum maintenance activates listed in the tables. PRC-005-2 must plainly and tersely tell the owners what they must do - not how to do it.		
American Electric Power	No	The first column, third row of Table 1-2 should be clarified to indicate whether the bulleted items are related by an "or" clause or an "and" clause. For example, must the communication system have either or both of those attributes for it to be considered?
Response: Thank you for your comment. We are requiring both bullets to be applicable and have changed the wording to better reflect our intention.		
ReliabilityFirst	No	ReliabilityFirst offers the following comments related to the bullet points in Question 1:

Organization	Yes or No	Question 1 Comment
		a. Bullet 1 - Agree with definition revisions b. Bullet 2 - Agree with clause 4.2.5.4 c. Bullet 3 - Disagree with revised Table 1-2 "Component Type - Communications Systems." The revision increased the maximum time for unmonitored systems to 12 years. However, communication failures correspond to one of the top three causes of Misoperations. The revised last row of the Table 1-2 still permits continuous monitoring to be substituted for testing. It is not clear that the available monitoring can actually identify the health of many of the components that can fail in a power line carrier communication system. RFC believes more research is needed to substantiate the 12 calendar year maintenance interval for unmonitored communications systems. d. Bullet 4 - Disagree with revised tables 1-4a, 1-4b, 1-4c, 1-4d, and 1-4f "Component Type - Protection System Station dc Supply...." The changes appear to largely ignore the recommendations of the IEEE Stationary Battery Committee.
Response: Thank you for your comments. A. Thank you. B. Thank you. C. The SDT agrees with your comment and has changed the maximum interval for this activity back to 6 calendar years. D. The changes to maintenance tables 1-4 (a-f) were made as a result of conversations with members of the IEEE Battery Task Force and their recommendations to the drafting team. The drafting team considered the IEEE Battery Task Force Recommendations and revised the standard with the assistance of several of their members (see the drafting team response posted on the NERC site).		
BAE Batteries USA	No	I agree with the basic changes, but recommend that a slight modification be made to Tables 1-4(a) and 1-4(b). In the box defining the 18 calendar Months or 6 Calendar Years, the portion in parentheses (e.g. internal ohmic values or float current) should be changed to (e.g. internal ohmic values or

Organization	Yes or No	Question 1 Comment
		float current in concert with other accepted measurements).
Response: Thank you for your comments. The drafting team disagrees and believes that examination of other accepted measurements and inspection results (indicative of battery performance) are a part of trending to the station battery baseline. This same inference applies to the interpretation of the results of a performance or modified performance capacity test for determining whether a station battery should be replaced or cells removed. Please see section 15.4 of the Supplementary Reference and FAQ document for a further discussion of this topic.		
Central Lincoln	No	Central Lincoln agrees with most of the changes except for the change from "as designed" to "as manufactured" in the Station DC supply table. The concern is not high enough to warrant a negative ballot, and we appreciate the difficulty the SDT has had on this issue with IEEE. The "as manufactured" performance may be interpreted as the battery's capacity when new and fully charged. Of course a properly engineered system will be based on a future aged battery capacity, reduced from the brand new capacity. We prefer "as designed," but this might lead a CEA to ask for design documentation an entity may have not retained. In the end, it is not the manufactured or design capacity that matters, it is the battery's ability to power the protection systems and trip the breakers. We suggest "as manufactured" be changed to "as needed."
Response: Thank you for your comment. One of the reasons that "as designed" was changed to "as manufactured" is as you discussed. If "as designed" is used it will be difficult for the owner to determine the original design for the dc system, making it difficult for an owner during an audit. Just like the term "as designed" is difficult to document, "as needed" will also be harder for the owner to document than "as manufactured." See question "Why is it necessary to verify the battery string can perform as manufactured?" in Section 15.4 of the Supplementary Reference and FAQ document for a further explanation of this change.		
EPRI	No	1. Table 1-4a - Verify that the station battery can perform as manufactured by evaluating the measured cell/unit internal ohmic values against the baseline values of each cell.-and-Verify that the station battery can perform as manufactured by conducting a performance capacity test of

Organization	Yes or No	Question 1 Comment
		the entire battery bank. 2. Table 1-4b - Verify that the station battery can perform as manufactured by evaluating the measured cell/unit internal ohmic values against the baseline values of each cell.-or-Verify that the station battery can perform as manufactured by conducting a performance capacity test of the entire battery bank. 3. Table 1-4c - Verify that the station battery can perform as manufactured by evaluating the measured cell/unit internal ohmic values against the baseline values of each cell.-and-Verify that the station battery can perform as manufactured by conducting a performance capacity test of the entire battery bank.
Response: Thank you for your comments: 1. The standard drafting team believes the "or" of table 1-4(a) should not be replaced with the "- and -" as stated in your comment. The station battery owner of a VLA battery should be allowed to perform either of the two maintenance activities listed in table 1-4(a) to be compliant with the standard, and that "cell/unit measurements indicative of battery performance (e.g. internal ohmic values or float current)" should remain in the standard. 2. The standard drafting team agrees that the "-or-"should remain as you suggested in your comment. This will allow the owner of a VLRA battery to choose compliance by performing either of the two maintenance activities at their maximum maintenance intervals listed in table 1-4(b). 3. Because of the marked difference in the aging process of lead acid and nickel-cadmium station batteries the drafting team does not believe that trending ohmic values against the baseline values of each cell, and conducting a performance capacity test of the entire battery bank is the appropriate maintenance activity for NiCad Batteries to 'Verify' that the station battery can perform as manufactured. The only appropriate maintenance activity in Table 1-4(c) at the maximum maintenance interval of 6 calendar years is to "Verify that the station battery can perform as manufactured by conducting a performance or modified performance capacity test of the entire battery bank."		
Illinois Municipal Electric Agency	No	Illinois Municipal Electric Agency supports comments submitted by Florida Municipal Power Agency. IMEA appreciates SDT efforts, and supports the overall refinements in PRC-005-2; however, the inconsistency between 4.2.1 and the FERC-approved interpretation of PRC-005-1b needs to be resolved

Organization	Yes or No	Question 1 Comment
		to avoid confusion. This issue has implications for smaller entities in particular.
Response: Thank you for your comments. The SDT believes that the Applicability 4.2.1 as stated in PRC-005-2 is correct and supports the reliability of the BES. The SDT believes all Protection Systems installed for the purpose of detecting faults on the BES need to be maintained per the requirements of PRC-005-2. The SDT observes that the approved Interpretation addresses the term, "transmission Protection System", and notes that this term is not used within PRC-005-2; thus the Interpretation does not apply to PRC-005-2. Please see Section 2.3 of the Supplementary Reference and FAQ document for additional discussion.		
PPL Generation, LLC on behalf of its Supply NERC Registered Entities	No	See Question 3 Comments
Response: Thank you for your comments. Please see the response to your Question 3 comments.		
TPI	No	See IEEE Stationary Battery Committee Letter dated 23 March 2012
Response: Thank you for your comments. The drafting team considered the IEEE Battery Task Force Recommendations and revised the standard with the assistance of several of their members (see the drafting team response posted on this project's page of the NERC website).		
Tennessee Valley Authority	No	
MRO NSRF	Yes	While we agree with the changes made, we believe that table 1-4 should include in the 18 calendar month maintenance activities: 1) Setting the battery charger to equalize, and 2) Inspect battery charger components for leakage and or damage. These additional steps would verify the ability of the battery charger to operate as needed.
Response: Thank you for your comments. Because all battery chargers used in Protection Systems do not have equalize settings or have components that leak, the drafting		

Organization	Yes or No	Question 1 Comment
team does not believe your recommendation is appropriate for this standard.		
Southern Company	Yes	Related to the changes identified in the Battery Tables: 1. We do not see that the change from "as designed" to "as manufactured" really changed the meaning of the battery capability to delivery its rated capacity. We would like the SDT to consider the following language: "verify that the station battery can provide adequate power to the Protection System by conducting....." 2. For Generating Plant Batteries, we feel as though that the only way to prove that a generation battery can deliver what it is supposed to be able to deliver for "All" of its functions is by conducting a capacity test". We would like the SDT to consider adding such a Note to the battery tables and/or make the statement in the FAQ document.
Response: Thank you for your comments: 1. To "verify that the station battery can provide adequate power" for a battery serving a generating station dc supply or a station dc supply that has dc loads considerably greater than the Protection System requirements may appear to be a good choice; however, the use of "adequate power" makes it difficult for the Generator Owner to determine the original design of the dc system and show an auditor that "adequate power" can be delivered to the dc system by the battery. For this reason and others explained in the Supplementary Reference and FAQ document under the question "why is it necessary to verify the battery string can perform as manufactured?" The drafting team believes that perform as "manufactured" is the best wording for the standard. 2. Your concerns about large amp-hour batteries used in generating stations and transmission stations with large auxiliary loads was addressed in the drafting team's response to the Chair of the IEEE Stationary Battery Committee, which stated: "In contrast to the Transmission Owner battery design function, a Generator Owner's battery likely feeds other critical loads such as DC powered oil pumps, seal oil pumps, and other DC control power loads necessary to safely shutdown a power plant following a loss of AC power. In the case of nuclear plants, these DC loads could include motor operated valves and other loads related to nuclear safety. For the Generator Owner, the design load profile for the battery is a long duration, deep discharge of the battery. While a cell ohmic value trending program might be adequate to prove that the Generator Owners battery could fulfill its Protection System function, the Generator Owner might want to		

Organization	Yes or No	Question 1 Comment
validate the deep discharge capability of the battery by routine periodic capacity testing to prove the battery's adequacy at providing power to those long duration loads critical for plant shutdown. The PSMTSDT believes that this deep discharge battery capacity test approach will prove the battery can meet its function relative to the plant Protection System without also having a trending program for cell ohmic values."		
Ingleside Cogeneration LP	Yes	Ingleside Cogeneration LP agrees that the changes described above make PRC-005-2 clearer and less ambiguous. We believe that this will result in far fewer violations related to administrative or documentation errors - and focus on those cases which actually may impair BES reliability.
Response: Thanks for your support.		
San Diego Gas & Electric	Yes	TABLE 1-5: Similar to the distributed under-frequency load-shedding relays, SPS control circuitry should only be regulated to verify the integrity of the control circuits from the relay to the lockout or auxiliary relay that is used to trip the circuit breakers, but not to the circuit breakers themselves. Owners of SPS control circuitry should have the option of testing these schemes using test procedures that will confirm the control circuitry through the completed trip circuit is continuous and that the circuit breaker will operate when required. Often times the operation of the circuit breaker is confirmed by operation through other protection systems and the SPS function is a parallel path that can be verified without operating the circuit breaker. This change would allow the Transmission Owner to eliminate equipment outages required to test this scheme or the risk caused by removing the SPS for energized testing.
Response: Thank you for your comments. The table only requires that the SPS control circuit path including the trip coil of the breaker be verified with a 12 year maximum interval. The testing does not have to be done all at once; the maintenance activities in the table can be performed in segments and are complete as long as the entire circuit is tested within the interval. Section 10 of the Supplementary Reference and FAQ document provides additional discussion on this.		
Alliant Energy	Yes	While we agree with the changes made, we believe that Table 1-4 should

Organization	Yes or No	Question 1 Comment
		include in the 18 month maintenance activities more checks on Battery Chargers. Based on EPRI data and vendor recommendation we believe that 1) Setting the Battery Charger to equalize, and 2) Inspect battery charger components for leakage and/or damage should be added. These additional steps would better verify the ability of the battery charger to operate as needed.
Response: Thank you for your comments. Because all battery chargers used in Protection Systems do not have equalize settings or have components that leak, the drafting team does not believe your recommendation is appropriate for this standard.		
Ameren	Yes	We believe that the SDT has improved the definitions with these changes and we fully support them. In addition, we also support the Table 1-2 Communication Systems changes based on our experience, and the Station dc Supply changes in the five Tables 1-4a, 1-4b, 1-4c, 1-4d, and 1-4f because they are realistic and consistent with our experience.
Response: Thank you for your support.		
Public Service Company of New Mexico	Yes	1. PNM seeks clarification on the revised Clause 4.2.5.4 of the Applicability section of the standard. - "Protection Systems for station service or excitation transformers connected to the generator bus of generators which are part of the BES, that act to trip the generator either directly or via lockout or tripping auxiliary relays." Will Auxiliary Transformers that are directly connected to the generator bus of generators which are part of the BES and that step down to distribution level voltage & perform similar functions as that of station service transformer fall under this clause?
Response: Thank you for your comments. If the cited Protection Systems trip the generator, they are applicable to the requirements of PRC-005-2 and maintained accordingly.		
Brazos Electric Power Cooperative	Yes	Please see the formal comments submitted by ACES Power Marketing.

Organization	Yes or No	Question 1 Comment
Response: Thank you for your comments. Please see the response to ACES Power Marketing.		
Northeast Power Coordinating Council	Yes	
ACES Power Marketing Standards Collaborators	Yes	
Duke Energy	Yes	
Southwest Power Pool NERC Reliability Standards Development Team	Yes	
FirstEnergy	Yes	
Dominion	Yes	
PNGC Small Entity Comment Group	Yes	
Luminant	Yes	
Colorado Springs Utilities	Yes	
Nebraska Public Power District	Yes	
PacifiCorp	Yes	
Independent Electricity System Operator	Yes	
Public Utility District No. 1 of	Yes	

Organization	Yes or No	Question 1 Comment
Okanogan County		
Manitoba Hydro	Yes	
Consumers Energy	Yes	
Georgia Transmission Corporation	Yes	
CenterPoint Energy	Yes	
Seminole Electric Cooperative, Inc	Yes	
Tacoma Power	Yes	
Idaho Power Company	Yes	
American Transmission Company, LLC	Yes	
US Bureau of Reclamation	Yes	
Oncor Electric Delivery	Yes	
Xcel Energy	Yes	
Kansas City Power & Light	Yes	
HHWP		no comment

2. The SDT made complementary changes in the "Supplementary Reference and FAQ Document" to provide supporting discussion for the Requirements within the standard. Do you have any specific suggestions for further improvements?

Summary Consideration:

Commenters suggested a variety changes to the Supplementary Reference and FAQ document. The SDT appreciated the feedback and made numerous modifications to the document ranging from correcting typographical errors to including some additional FAQ and corresponding answers, as well as presenting new and revised technical content.

Organization	Yes or No	Question 2 Comment
San Diego Gas & Electric	No	R5/M5: M5 should add "The evidence may include but is not limited to...tracking of the unresolved maintenance issue in accordance with the TO's corrective maintenance process." This alleviates the Transmission Owner from setting up a separate corrective maintenance tracking process intended solely for this regulation.
Response: Thank you for your comments. This comment is related to the standard itself and not to the Supplementary Reference and FAQ document. The Measures are intended to provide examples of evidence, and are not meant to be all-inclusive.		
Illinois Municipal Electric Agency	No	Illinois Municipal Electric Agency supports comments submitted by Florida Municipal Power Agency.
Response: Thank you for your comments. Please see the responses to Florida Municipal Power Agency's comments.		
PPL Generation, LLC on behalf of its Supply NERC Registered Entities	No	See Question 3 Comments
Response: Thank you for your comment. Please see the responses to your Question 3 comments.		
Northeast Power Coordinating Council	No	
Imperial Irrigation District (IID)	No	

Organization	Yes or No	Question 2 Comment
Duke Energy	No	
Southwest Power Pool NERC Reliability Standards Development Team	No	
Tennessee Valley Authority	No	
Colorado Springs Utilities	No	
Nebraska Public Power District	No	
PacifiCorp	No	
Ingleside Cogeneration LP	No	
Independent Electricity System Operator	No	
Public Utility District No. 1 of Okanogan County	No	
Manitoba Hydro	No	
CenterPoint Energy	No	
Seminole Electric Cooperative, Inc	No	
Tacoma Power	No	

Organization	Yes or No	Question 2 Comment
Idaho Power Company	No	
Kansas City Power & Light	No	
Bonneville Power Administration	Yes	BPA requests the drafting team to provide more detailed examples of the following for both monitoring and testing: 1. That addresses the multiple routes, and automated switching between the routes, in a typical large Telecommunications Network Cloud. This applies only if testing of the 'cloud', or a teleprotection channel through the 'cloud', is the intent of the standard. 2. That addresses the fact that many older teleprotection technologies, not only used separate test inputs/outputs, but the internal path through the equipment is unverified until the particular function is activated. I.E.: In certain technologies, a functioning 'guard' signal does not have any correlation to a functioning 'trip' signal.
Response: Thank you for your comments. 1. The intent of the standard is to verify the teleprotection channel is functional, regardless of what constitutes the channel. 2. The SDT believes that the maintenance activity in Table 1-2, "Verify operation of communication system inputs and outputs that are essential to proper functioning of the Protection System" allows the entity flexibility to maintain the various technologies that they may own. The Supplementary Reference and FAQ document addresses some of the options available, but obviously cannot provide detail on all types of equipment.		
ACES Power Marketing Standards Collaborators	Yes	Several capitalized terms in the supplementary reference document are used inconsistently with their definition or the reference to their definition is not clear. For example, "communications Systems" in the second bullet in section 2.2 uses "Systems" inconsistently with its definition. The use of "sensing Element" on page 6 is another example. We believe this is inconsistent with the definition of Element which could be a generator, transformer, circuit breaker, bus section, etc. but does not appear to be a Protection System Component. The "localized" definition of Component that is contained in the standard should also

Organization	Yes or No	Question 2 Comment
		be included in the reference document since it is not in the NERC Glossary. Use of "dc Load" on page 82 is not consistent with the definition of Load. Load is an end use customer. There are many other places in the document where there are inconsistencies with these definitions. Thus, the document needs to be further reviewed to ensure the use of the terms is consistent with their definitions.
Response: Thank you for your comments. The SDT modified the Supplementary Reference and FAQ document as you suggested.		
Dominion	Yes	The term 'Underfrequency' is capitalized in the Supplementary Reference document yet it is not included in NERC's Glossary of terms. We suggest a return to lower case. In fact, given this document is meant to be used for reference only, we question the need to capitalize any term.
Response: Thank you for your comments. The SDT modified the Supplementary Reference and FAQ document as you suggested. For consistency with the standard, the SDT will continue to capitalize terms when they are used in the context defined in the NERC Glossary of Terms.		
Luminant	Yes	The testing of non-BES breakers for plants should be discussed in the FAQ using the similar application for Distribution Providers. Luminant recommends a section for Generation Owners that describes what Elements (circuit breakers) should be tested. Luminant strongly believes that there is no additional benefit to the BES by requiring the GO to test the non-BES breakers (UAT low side and generator field breakers). These circuits are radial fed.
Response: Thank you for your comments. The FAQ discussion on testing of non-BES breakers for Distribution Providers pertains to those devices used as part of UFLS or UVLS schemes. Section 15.3.1 of the Supplementary Reference and FAQ document has been augmented to address this topic for Generator Owners.		
Southern Company	Yes	See comment on Generating Plant Batteries in Question #1.
Response: Thank you for your comments. Please see the response to your comments in Question 1.		
Western Area Power	Yes	Western Area Power Administration is appreciative of the hard work done by the SDT

Organization	Yes or No	Question 2 Comment
Administration		and NERC. We respectfully submit that the Supplementary Reference and FAQ Document should: 1. Offer guidance on establishing baselines for older battery banks 2. Be in agreement with IEEE standards for battery maintenance 3. Replace the existing CANS
Response: Thank you for your comments. 1. Please see Section 15.4.1 of the Supplementary Reference and FAQ document, specifically the question, "How is baseline established for cell/unit internal ohmic measurements?" which offers guidance on establishing baselines for older battery banks. 2. The IEEE documents to which you refer are "Recommended Practices" as explicitly stated in their titles and not mandatory standards. The SDT considered the IEEE Recommended Practices, as well as other documents, in developing the minimum requirements and maximum intervals within PRC-005-2. 3. The CANs are developed by NERC Compliance Staff to address specific currently-approved NERC Standards, and will be retired when the related standards are retired. The SDT has no control or influence regarding CANs.		
Alliant Energy	Yes	Section 15.4 of the FAQ document does an excellent job of describing the details of battery maintenance and testing, but there is essentially no description of battery charger maintenance and testing activities. We believe this section needs to be expanded to include a good description of battery charger maintenance activities as well.
Response: Thank you for your comments. While manufacturers' recommendations for maintenance of their equipment are quite diverse, the required maintenance activities within PRC-005-2 for battery chargers are: verification of the station dc supply voltage (maximum unmonitored maintenance interval 4 calendar months); and, verification of the battery charger float voltage (maximum unmonitored maintenance interval of 18 calendar months). If anomalies regarding the battery charger are found by performing these activities, relevant corrective actions should be taken.		
American Electric Power	Yes	Rather than voluminous supplementary references, we suggest adding this information, as necessary, to the standard itself. Not only would this prove beneficial by having less information housed outside of the standard, it might also help prevent

Organization	Yes or No	Question 2 Comment
		the need for future CANs and interpretation requests. Though the guidance provided in these documents may appear to be beneficial, we are troubled that the SDT feels it is necessary to provide such a volume of material outside the standard itself, and yet still consider such “references” as enforceable.
Response: Thank you for your comments. This document provides supporting discussion, but is not part of the standard and not enforceable. The SDT intends that it be posted as a reference document accompanying the standard. As established in the SDT Guidelines, the standard is to be a terse statement of requirements, and is not to include explanatory information like that included in the Supplementary Reference and FAQ document. The Supplementary Reference and FAQ document will be revised in conjunction with any revisions of PRC-005.		
BAE Batteries USA	Yes	1. On page 21 of 97,Question 7.1, "Please provide an example of the unmonitored versus other levels of monitoring available," "Every six calendar years, perform/verify the following: Battery performance test (if ohmic tests are not opted)" - add after ohmic tests "or other accepted battery measurement parameters." 2. pg 22 of 97, Example 2 "Every 18 calendar months": Add the same verbiage so that the first bullet reads: "Battery ohmic values or other accepted battery measurement parameters to station battery baseline . . ." 3. pg 23 of 97, Example 3 "Every 18 calendar months": Add the same verbiage so that the first bullet reads: "Battery ohmic values or other accepted battery measurement parameters to station battery baseline . . ." 4. pg 23 of 97, Example 3 "Every six calendar years": Add the same verbiage so that the first bullet reads: "(if internal ohmic test or other accepted battery measurement parameters to station battery baseline are not opted)" 5. pg 27 of 97, Question 8.1.2, item #4: Change the last sentence to read: "However, the methods prescribed in these recommendations cannot be specifically required because they are offered as best practice guidelines and not set as standards." 6. pg 71 of 97, Question 15.4.1, Frequently asked Questions: "How is a baseline

Organization	Yes or No	Question 2 Comment
		established for cell/unit internal ohmic measurements?" 2nd paragraph - 1st sentence, replace the word "consistent test equipment" with "the same type of test equipment." In addition, should add a final sentence at the end of this paragraph that states, "Also, in many cases, one manufacturer's 'conductance' test may not produce the same measurement results as another 'conductance' test manufacturer's equipment. Therefore, for meaningful results to an established baseline, the same instrument should always be used." 7. Page 73 of 97, Question 15.4.1, Frequently asked questions: "What conditions should be inspected for visible battery cells?" Approximately in the 7th line modify the sentence to read . . .abnormal color(which is an indicator of sulfation or possible copper contamination) . . . 8. Page 75 of 97, Question 15.4.1, Frequently asked questions: "How do I verify the battery string can perform as manufactured?" 2nd paragraph that reads "Whichever parameter is evaluated . . ." should be revised to say "Whatever parameters are used to evaluate the battery (ohmic measurements, float current, float voltages, specific gravity, performance test, or combination thereof), the goal is to determine . . . 9. Page 75 of 97, Question 15.4.1, Frequently asked questions: "How do I verify the battery string can perform as manufactured?" 5th paragraph starts, "A detailed understanding of the characteristic of a battery is also attempting to use float current as a measure of the ability of a battery . . . and ends with "to see if a trending process is recommended for determining aging of these products." The Stationary Battery Task Force recommends deleting this whole paragraph due to inaccuracies or statements that are not relevant. If a paragraph that alludes to float current is considered critically essential, then a short paragraph could be substituted which might say," Float current along with other measureable parameters can be used in lieu of or in concert with ohmic measurement testing to measure the ability of a battery to perform as manufactured. The key to using any of these measurement devices is to establish a trending line against baseline so that a documented process establishes the validity of the judgment used to determine that the battery may

Organization	Yes or No	Question 2 Comment
		perform or not perform as manufactured." 10. Page 81 of 97, Question 15.4.1, Frequently asked questions: "Why does it appear that there are two maintenance activities in Table 1-4(b) for VRLA batteries . . . .?" 3rd paragraph: "A comparison and trending against the baseline new battery ohmic reading can be used in lieu of capacity tests to determine remaining battery life. Remaining battery life is analogous to stating that the battery is still able to 'perform as manufactured.'" This might better be restated as follows: "Trending against the baseline of VRLA cells in a battery string is essential to determine approximate state of health of the battery. For example, using ohmic measurement testing as the mechanism for measuring the battery cells, then, if all the cells in the string show to be in a consistent trend line and that trend line has not risen above say a 25-30% deviation over baseline, then a judgment can be made that the battery is still in a reasonably good state of health. This judgment can assume that the battery is still able to 'perform as manufactured.' It would be wise to confirm the accepted deviation range with the manufacturer of the battery in question to assure good judgment in deciding on the state of health to perform as manufactured.' This is the intent of the "perform as manufactured six-month test' at Row 4 on Table 1-4(b)." 11. Page 81 of 97, Question 15.4.1, Frequently asked questions: [same as Item #10 above], following paragraph: Recommend using a range of 25-30% with the statement that "It would be wise to confirm the accepted deviation range with the manufacturer of the battery in question to assure good judgment' in deciding on the state of health to perform as manufactured.

Response: Thank you for your comments.

1. The SDT modified the Supplementary Reference and FAQ document on page 21 as you suggested.
2. The SDT modified the Supplementary Reference and FAQ document on page 22 as you suggested.
3. The SDT modified the Supplementary Reference and FAQ document on page 23 as you suggested.
4. The SDT modified the Supplementary Reference and FAQ document on page 23 as you suggested.
5. The drafting team agrees with your comment concerning all of the best practices of the IEEE guidelines not being requirements of the standard and incorporated your comments into the Supplementary Reference and FAQ document on page 27.

Organization	Yes or No	Question 2 Comment
6. The drafting team incorporated your comments concerning same type test equipment replacing consistent type test equipment on pages 71 & 72 of the Supplementary Reference and FAQ document. 7. The drafting team added a comment regarding color observation on page 74 of the Supplementary Reference and FAQ document. 8. The SDT modified the Supplementary Reference and FAQ document on page 75 as you suggested. 9. The SDT modified the paragraph on float current on page 75 of the Supplementary Reference and FAQ document as you suggested. 10. The SDT modified the Supplementary Reference and FAQ document based on your comment. 11. The SDT revised the Supplementary Reference and FAQ document as you suggested.		
Georgia Transmission Corporation	Yes	Recommend adding further comments on data retention. We prefer the interpretation for the maintenance cycles equaling 12 calendar years, example microprocessor protective relays. This proves the extreme of data retention. We interpret the retention period to be 24 years. Previous test record to current test record equals 12 years, and 12 more years (next maintenance cycle) before removing previous records from storage (24 years).
Response: Thank you for your comments. To be assured of compliance, the SDT believes the Compliance Monitor will need the data for the most recent performance of the maintenance, as well as the data for the preceding maintenance period. This seems to be consistent with what auditors are expecting (per the SDT's experience), and is also consistent with Compliance Process Bulletins 2011-001 and 2009-05.		
Ameren	Yes	(1) Capitalizing in some cases is inappropriate (e.g., Systems; Glossary defines System as 'A combination of generation, transmission, and distribution components.' So 'communication System' incorrectly capitalizes 'system'). (2) Page 15, we disagree with retention of maintenance records for replaced equipment as this can cause confusion. We believe that at the most the last maintenance date could be retained to prove interval between it and the test date of the replacement equipment that provides like-kind protection. (3) We request the SDT to provide a few examples of 'non-battery-based dc supply'. The SDT has previously responded that this does not include 'capacitor trip devices'.

Organization	Yes or No	Question 2 Comment
		Does the SDT mean to include M-G sets, flywheels, and / or rectifiers? Also, Emerging Technologies on page 73 is vague please clarify.
Response: Thank you for your comments. 1. The SDT revised the Supplementary Reference and FAQ document to address your comment. 2. The records for removed/replaced equipment need to be retained to provide documented evidence that the entity was in compliance for the entire compliance monitoring period. This documentation includes maintenance activities as well as maintenance intervals. 3. As noted, the drafting team previously stated that the "capacitor trip devices" on circuit breakers and reclosers are not examples of station dc supply devices using emerging technology. Some of the non-battery based energy storage devices with demonstrated prototypes for use in Protection System dc supplies are the flywheel and the fuel cell. One non-battery based dc supply commercially available in the United States and Canada uses compressed air and a capacitor to replace the electrochemical process of a station battery for supplying the dc power required for operating Protection System elements and for supplying normal dc power to the station in the event of loss of ac power.		
Public Service Company of New Mexico	Yes	The Supplementary Reference and FAQ Document has served as a valuable resource and PNM commends the drafting team's efforts in writing a comprehensive document. Section 13. Self Monitoring Capabilities and Limitations - Last but one bullet on Page 59 of the Supplementary Reference and FAQ Document is confusing and needs possible rewording and clarification. "With this information in hand, the user can document monitoring for some or all sections by extending the monitoring to include..." appears confusing.
Response: Thank you for your comments. The SDT modified the Supplementary Reference and FAQ document to address your comment.		
EPRI	Yes	Why consider the ability of the station battery to perform as manufactured? The reason the term "perform as manufactured" was used is because there is not much data available to verify actual sizing of the cells for their application. The only battery values for typical Protection systems that have a verifiable basis are the battery manufacturer's data. The only way to know when a battery needs to be replaced is to

Organization	Yes or No	Question 2 Comment
		compare measured values against manufacturer's data or other established values. To verify that the station battery can perform as manufactured is the process of determining when the station battery must be replaced or when an individual cell or battery unit must be removed or replaced. Inspections alone do not provide trending information that indicates the state of aging of a station battery. The maintenance activities listed in Table 1-4 to "verify that a station battery can perform as manufactured" are intended to provide information about the aging process of a station battery. A Transmission Owner, Generator Owner or Distribution Provider can then use the information provided by the maintenance activity to determine if testing of a station battery is required or if timely replacement or removal of the station battery or its components (cell/unit) should be accomplished. Capacity discharge testing is the only industry approved method of determining the true capacity of lead acid and nickel-cadmium station batteries. The performance capacity test of the entire battery bank listed as maintenance activities of table 1-4 provides a mechanism for trending battery discharge characteristics based on manufacturers published data. Trending discharge test results is the basis for determining the aging of a station battery serving a Protection System. Based on these results, decisions concerning replacement of a battery serving a Protection System and its components can be made by the Transmission Owner, Generator Owner or Distribution Provider. There is a marked difference in the aging process of lead acid and nickel-cadmium station batteries. The difference in the aging process of the two types of batteries is chiefly due to the electrochemical process of the battery type. Aging and eventual failure of lead acid batteries is due to expansion and corrosion of the positive grid structure, loss of positive plate active material, and loss of capacity caused by physical changes in the active material of the positive plates. However, the primary failure of nickel - cadmium batteries is because of the gradual linear aging of the active materials in the plates. The electrolyte of a nickel - cadmium battery only facilitates the chemical reaction (it functions only to transfer ions between the positive and negative plates), but is not chemically altered during the process like the electrolyte of a lead acid battery. A lead acid battery experiences continued

Organization	Yes or No	Question 2 Comment
		corrosion of the positive plate and grid structure throughout its operational life while a nickel - cadmium battery does not. Changes to the periodic measured properties of a lead acid battery when trended to a baseline can provide an indication of aging of the grid structure, positive plate deterioration, or changes in the active materials in the plate. Since aging in nickel-cadmium cells is linear, periodic measured properties of nickel-cadmium cells when trended to a baseline can provide an indication of aging of the active material in the positive plates. By trending periodic measured properties of a station battery serving its Protection System the Transmission Owner, Generator Owner or Distribution Provider can develop a condition based method to determine (1) when a station battery requires a capacity test (instead of performing a capacity test on a predetermined, prescribed interval), (2) when an individual cell or battery unit should be replaced, or (3) based on the analysis of the trended data, if the station battery should be replaced without performing a capacity test. There is a clear difference in the aging process of lead acid and nickel-cadmium batteries. The measurable properties of a nickel - cadmium battery will change more gradually than VRLA cells; therefore, periodic interval and trending to determine aging has very little industry experience, but the user should work with the battery manufacturer to determine if internal ohmic measurements can be applied to their product. While it has been proven that there is a relationship between internal ohmic measurements and cell capacity of lead acid batteries, an accurate determination of a battery's exact capacity cannot be attained by measuring its cell's internal ohmic values. However, trending internal ohmic measurement of VRLA battery cells to establish a base line is a method of trending measured properties by Transmission Owners, Generator Owners and Distribution Providers to evaluate their station battery cells for health and aging. Evaluating internal ohmic cell/unit measurements against the battery cell baseline values is an acceptable Maintenance Activity listed in tables 4-1(a) and 4-1(b) 4-1(c) to verify that the station battery can perform as manufactured as long as it is measured and trended to the baseline values at an interval less than or equal to the published Maximum Maintenance Interval of tables. Why was the term "manufactured" used instead of "designed" in the maintenance activities of tables 1-

Organization	Yes or No	Question 2 Comment
		4(a), 1-4(b), 1-4(c), 1-4(d) and 1-4(f)?The phrase "as designed" always raises the question of "who made the design requirements that are being tested to or evaluated, the manufacturer of the battery or the engineer sizing the battery? The use of the term designed when discussing a battery's ability to perform was incorrect because we did not differentiate between a performance test and a service test. The phrase "meets the design requirements" is used when discussing a service test which is a discharge test that measures a battery's capability to meet a duty cycle which was designed by the person sizing the battery. However, when talking about a performance capacity test, the test is a measure of the currents or amp-hour discharge rates based on the battery manufacturer data for the station battery being tested. The term "manufactured" used in the tables avoids the confusion caused by the term "designed" and its application to service testing. Also, when discussing internal ohmic measurement trending, "manufactured" applies to establishing a set of base line values when compared to a battery of known capacity based on the manufacturer's published data. When trending other measurable properties that assist in establishing aging, the battery manufacturer's data are used as a basis for establishment of baseline values and therefore the use of "manufactured" avoids any ambiguity that might be caused by use of the term "designed".

Response: Thank you for your comments.

The drafting team recognizes that the majority of your comments support and amplify the information contained in the Supplementary Reference and FAQ document. However, the drafting team does not agree with some of the information contained in your comments.

1. While the drafting team agrees that part of the process of determining when to replace a battery should be "to compare measured values against manufacturer's data or other established values," we disagree with the statement "the only way to know when a battery needs to be replaced is by using this maintenance activity" because it does not give credit to the role visual inspections play in the replacement process.
2. The drafting team has a broader interpretation of the term "manufactured" than that implied in your comment concerning ohmic measurement trending ("manufacturer's published data"). We believe the term "manufactured" as used in the maintenance activities of the standard also includes as you stated earlier in your comment "other established values." Just as

Organization	Yes or No	Question 2 Comment
battery manufacturers establish tolerances that when exceeded constitute further examination of the battery for replacement, test equipment manufacturers, battery owners and others have established tolerances for specific batteries that are considered valid to determine if the particular battery can perform as "manufactured." 3. As implied in your comment and by over a decade of industry experience, it has been proven that there is a relationship between internal ohmic measurements and the aging process of lead-acid batteries. No such relationship has been established for nickel-cadmium batteries. Also at this time - with the exception of the results of a capacity test - the drafting team is unaware of any published data for nickel-cadmium battery properties that can be measured and trended against the station battery baseline. The drafting team believes that either of the two maintenance activities listed in table 1-4(a) and 1-4(b) for lead-acid batteries are acceptable to verify that the station battery can perform as manufactured when conducted at the maximum maintenance intervals of the tables. However, the drafting team disagrees with your inference that table 1-4(c) for Nickel Cadmium batteries should have any other maintenance activity besides the performance or modified performance capacity test of the entire bank to verify that the station battery can perform as manufactured.		
US Bureau of Reclamation	Yes	The FAQ should clarify why the requirement for a "Summary of maintenance and testing procedures" developed by an entity is considered prescribing a methodology to meet those requirements. The entity is developing the methodology for meeting the requirements that the elements be maintained.
Response: Thank you for your comment. "Summary of maintenance and testing procedures" is terminology used in Requirement R1.2 of the existing standard PRC-005-1.1b and is not applicable to version PRC-005-2.		
Oncor Electric Delivery	Yes	On Page 81 of the Supplementary reference and FAQ Draft it appears that the drafting team changed the term "designed" to "manufactured" and then used the quotation from the previous standard's Table 1-4(b). Oncor recommends that the two statements on page 81 of the Supplementary Reference and FAQ - Draft be changed from the present version "...verify that the station battery can perform as manufactured by evaluating the measured cell/unit internal ohmic values to station battery baseline." "Verify that the station battery can perform as manufactured by conducting a performance, service, or modified performance capacity test of the entire battery bank." to a new version of the quotes based on the new version of Table 1-4(b). The new quotes should be stated as follows:"...verify that the station

Organization	Yes or No	Question 2 Comment
		battery can perform as manufactured by evaluating cell/unit measurements indicative of battery performance (e.g. internal ohmic values or float current) against the station battery baseline." "Verify that the station battery can perform as manufactured by conducting a performance or modified performance capacity test of the entire battery bank."
Response: Thank you for your comments. The SDT modified the Supplementary Reference and FAQ document based on your comments.		
Brazos Electric Power Cooperative	Yes	Please see the formal comments submitted by ACES Power Marketing.
Response: Thank you for your comment. Please see the responses to the ACES Power Marketing comments.		
Xcel Energy	Yes	The following paragraph from the top of page 71 in the FAQ should be retained. When internal ohmic measurements are taken, consistent test equipment should be used to establish the baseline and used for the future trending of the cells internal ohmic measurements because of variances in test equipment and the type of ohmic measurement used by different manufacturer's equipment. Keep in mind that one manufacturer's "Conductance" test equipment does not produce similar results as another manufacturer's "Impedance" test equipment, even though both manufacturers have produced "Ohmic" test equipment. This paragraph from page 78 (second full paragraph) should be stricken or re written. Consistency is the key when measuring and evaluating ohmic readings. Consistent testing methods by trained personnel are essential. Moreover, it is absolutely critical that personnel use the same make/model of test instrument every time readings are taken if the values are going to be compared. The type of probe, the location of the reading (post, connector, etc.) and the room temperature during the test needs to be carefully recorded when the readings are taken. For every subsequent time the readings are taken, the same make/model of the test instrument must be used, the same type of probes must be used, and the location of the reading must be the same. The first paragraph explain the consistency issue and the second then removes the ability to

Organization	Yes or No	Question 2 Comment
		use consistent equipment and rather demands that identical equipment be used. This is not a feasible position as manufacturers can and do leave the testing space and therefore the entity should be cognizant of using the appropriate compatible test equipment but to spell out that particular make/models be maintained is not acceptable and brushes against anti-trust complications by inhibiting new players in this testing space.
Response: Thank you for your comments. The SDT revised the Supplementary Reference and FAQ document to address your concerns.		
TPI	Yes	Page 81...this statement is incorrect and should be changed: "A comparison and trending against the baseline new battery ohmic reading can be used in lieu of capacity tests to determine remaining battery life." "can be used" has to be changed to "may be used". This should refer to the other FAQ to fully explain how to use ohmic measurements. Page 81...25% is not a universally accepted value. This value has to be determined by experience for a particular type/model of battery. This part of the FAQ contradicts other FAQs.
Response: Thank you for your comments. 1. The SDT revised the Supplementary Reference and FAQ document based on your comment. 2. The SDT used 25% as an example, and revised the Supplementary Reference and FAQ document for clarity. Since there are no universally accepted repositories of this information, the Protection System owner will have to determine the value/percentage where the battery cannot perform as manufactured. This is the most difficult and important part of the entire process. The paragraph on page 81 of the Supplementary Reference and FAQ document has been modified based on your comments.		
HHWP		no comment
MRO NSRF	Yes	

Organization	Yes or No	Question 2 Comment
FirstEnergy	Yes	
PNGC Small Entity Comment Group	Yes	
Central Lincoln	Yes	
American Transmission Company, LLC	Yes	

3. If you have any other comments that you have NOT provided in response to the above questions, please provide them here. (Please do not repeat comments that you provided elsewhere.)

Summary Consideration:

Some commenters continued to object to various activities and/or intervals within the tables. The drafting team made several changes detailed below in response to these comments.

1. One interval was changed – the interval for the activity in Table 1-2 for unmonitored communications systems was changed from 12 years back to 6 years as it had been in all previous postings. This change promotes consistency with similar activities within Table 1-1 (Protective Relays).
2. The language in two activities in Table 1-2 was changed from "channels" to "communications systems".
3. The language in the Component Attributes in the last row of Table 1-2 was modified to read: "Any communications system with all of the following:" to clarify that all must be present to use the related intervals and activities.
4. In Table 1-4e, a redundant "only" was removed from the Component Attributes in the last row.

A few commenters objected to the prescribed VRFs and/or VSLs. The SDT responded that these VRFs and VSLs are in accordance with guidance from FERC and NERC.

A few comments were offered regarding Data Retention, generally objecting to retaining the maintenance records for two complete maintenance intervals. The SDT responded that the data retention specifications are consistent with auditors' expectations and with Compliance Process Bulletins 2011-001 and 2009-05.

Several comments were made (some expressed as the reason for a Negative Ballot) in response to the informational posting of the draft SAR to modify PRC-005-2 to add reclosing relays. No changes were made as a result of these comments.

Organization	Yes or No	Question 3 Comment
Ameren		(1) Remove Table 1-4 batteries from the Countable Event definition. (2) Please change Table 1-4(d) title to "Component Type - Protection System Non Battery Based Station dc Supply" [delete: Using Non Battery Based Energy Storage] to be consistent with the definition.

Organization	Yes or No	Question 3 Comment
		(3) R3 & R4: Change VRF to "Medium" for the following reasons: (a) Guideline (3) - Consistency among Reliability Standards is not satisfied. The VRF_Standards_Applicability_Matrix_2012-03-01 clearly shows that comparable requirements in the standards that PRC-005-2 replaces are Medium or Lower, specifically PRC-005-1b R2 VRF is Lower, PRC-008-0 R2 VRF is Medium, PRC-011-0 R2 VRF is Lower, and PRC-017-0 R2 VRF is Lower. (b) The High Risk Requirement is not met. We are not aware that lack of Protection System maintenance alone has directly caused or contributed to bulk electric system instability, separation, or a cascading sequence of failures. (c) Guideline (4) Consistency with NERC's Definition of the Violation Risk Factor Level is not met. Many entities do not presently perform several of the proposed minimum maintenance activities, and/or perform maintenance activities at greater than the PRC-005-2 maximum interval. Yet BES system instability, separation, or cascading sequence of failure events continues to be extremely rare. (4) Measure M3 on page 6 should only apply to 99.5% of the components. We strongly advocate the SDT to revise and state: "Each ... shall have evidence that it has implemented the Protection System Maintenance Program for 99.5% of its components and initiated...." We believe l that PRC-005-2 unrealistically mandates perfection without providing technical justification. A basic premise of engineering is to allow for reasonable tolerances, even Six Sigma allows for defects. Requiring perfection may well harm reliability by distracting valuable resources from higher priority duties concerning the Protection System. Note that we are not suggesting for the VSL to be changed. Our proposed reasonable tolerance sets an appropriate level of performance expectation. We disagree with the notion that this is "non-performance".
Response: Thank you for your comments. 1. The SDT believes that R1.1 is very explicit (All batteries associated with the station dc supply Component Type of a Protection System shall be included in a time-based program) and has precedence over the Countable Event definition. However, the		

Organization	Yes or No	Question 3 Comment
		drafting team does not agree that Table 1-4 should be removed from the Countable Event definition; Table 1-4(d) addresses non-battery-based energy storage devices, which can use a performance based program. 2. The SDT sees no appreciable improvement in the standard with your proposed change and respectfully declines to modify the standard. The drafting team believes the words "Energy Storage" in the title of Table 1-4(d) better conveys the role or circumstance of not having a battery in the dc supply, more so than using the wording from the latest version of the definition of Protection System (non-battery-based dc supply). 3. The SDT believes that the assigned VRFs are correct, as explained below: a. The SDT believes the requirements of PRC-005-2 do not map, one-to-one, with the requirements of the legacy standards, each of which comingle various attributes addressed within the new standard; thus, a requirement – to – requirement comparison of VRFs is irrelevant. b. The SDT believes that failure to implement and follow its PSMP could cause or contribute to bulk electric system instability, separation, or a cascading sequence of failures. c. The SDT believes that failure to implement and follow its PSMP could cause or contribute to bulk electric system instability, separation, or a cascading sequence of failures. **4.** VSLs define the degree to which compliance with a requirement was not achieved. Anything less than 100% constitutes a violation.
ACES Power Marketing Standards Collaborators		-1- The data retention requirements for Requirements R2, R3, R4, and R5 are not consistent with NERC Rules of Procedure. Section 3.1.4.2 of Appendix 4C – Compliance Monitoring and Enforcement Program states that the compliance audit will cover the period from the day after the last compliance audit to the end date of the current compliance audit. The data retention requirements compel the registered entity to retain documentation for the longer of "the two most recent performances of each distinct maintenance activity for Protection System Components, or all performances of each distinct maintenance activity for the Protection System Component since the previous scheduled audit date". Given that many of the maximum maintenance intervals exceed audit periods for responsible entities, an entity could be required to retain data previous to its last audit, which is not consistent with the Rules of Procedure. We suggest changing this such that the data only needs to be maintained since the last audit. -2- Under the "Definitions" section, for the definition of "Protection System" it is

Organization	Yes or No	Question 3 Comment
		unclear whether the bullets constitute items that are considered to be Protection Systems, elements that may be included within a Protection System, or elements which all must be included to constitute a Protection System. A statement preceding the bullets that explains their relationship to the term "Protection System" would be helpful. This clarification should at least be made within the supplementary reference document, if it cannot be made to the actual definition. -3- Requirement R1 VSLs: It is not clear why missing three component types jumps to a Severe VSL. Missing two is a Moderate VSL. Missing three should be a High VSL.
Response: Thank you for your comments. 1. To be assured of compliance, the SDT believes the Compliance Monitor will need the data for the most recent performance of the maintenance, as well as the data for the preceding maintenance period. This seems to be consistent with what auditors are expecting (per the SDT's experience), and is also consistent with Compliance Process Bulletins 2011-001 and 2009-05. 2. The definition of Protection System is expressed in the manner that FERC approved on February 3, 2012. 3. The SDT believes that missing three component types is a "significant percentage" and is in accordance with the VSL Guidelines.		
Exelon Corporation and its affiliates		1. In the response to Exelon's previous comment regarding current transformers, the SDT disagreed that test mandated by the current Standard draft seeks to measure a signal is "provided to the protective relay"; however, the test referenced in Table 1-3 merely confirms that the signal is sent and not that it reached the correct protective relay. Generation sites are built in phases, and these requirements do not ensure that the wiring of the protection system matches the prints and the intent of the engineers who designed it. Please provide a technical explanation of how this type of test for a CT will verify that the signal reaches the relay. 2. In the response to Exelon's previous comment related to the maintenance activity in Table 1-3 for PTs and CTs as they relate to electro mechanical relays the SDT disagreed that the maintenance program should be left to the discretion of the Generator Owner. Exelon further explained that In order to meet the required activity specified in PRC-005-2 draft 2 Table 1-3, the generating unit would be required to take readings with meters while the unit is operating. This practice

Organization	Yes or No	Question 3 Comment
		introduces a risk of tripping the unit inadvertently. The risk of tripping the unit while performing this maintenance activity is contrary to the intended purpose of PRC-005 and introduces a potentially adverse effect on the reliability of the BES. In its response the SDT has not provided the justification as to why performing such a high risk activity increases the reliability of the BES and justification for testing that refutes existing manufacturers recommendations. 3. In the last round of comments, the SDT did not specifically address Exelon's comments regarding the omission of "...and trips an interrupting device that interrupts current supplied directly from the BES" from the revised applicability language in Section 4.2.1. We are concerned that the SDT may not fully appreciate our concern. Without the qualification that comes from the "and..." phrase above, Exelon feels that section 4.2.1 will bring reverse-looking relays on radial transformers into scope, which are not interpreted as BES Protection Systems. By doing so, it creates a perverse incentive to disable these protection functions, even though they provide a reliability benefit, for the sake of limiting compliance exposure. Please offer a direct response to why the phrase, "...and trips an interrupting device that interrupts current supplied directly from the BES" is no longer included in 4.2.1 and clarify that non-BES relays are not considered within scope. Comments and SDT Response from last comment period (for reference):Exelon Comment: When the SDT changed the original PRC-005 applicability language from "...affecting the reliability of the BES..." to the new 4.2.1 language "...that are installed for the purpose of detecting faults on BES elements (lines, buses, transformers, etc.)", they opted to exclude the second half of this sentence taken from the PRC-005-1a Interpretation, which read "...and trips an interrupting device that interrupts current supplied directly from the BES." By doing so, the SDT failed to recognize that some Protection Systems can be responsive to faults on the BES, but still have no effect on the reliability of the BES. The change in 4.2.1 may unintentionally expand the scope of PRC-005.Depending on how Section 4.2.1 is interpreted, it could create a perverse incentive to disable, or not apply, reverse directional protection on the secondary (at voltages less than 100kV) of radially connected load-serving transformers. Such

Organization	Yes or No	Question 3 Comment
		relaying typically uses available units in a multifunction device, and while not critically necessary for fault clearing, it is applied because it adds a benefit at no incremental cost with minimal security risk, and it will not interrupt a BES element if it operates insecurely. It also improves reliability to connected distribution load, in the event a BES transmission line faults during abnormal switching, by coordinating with non-directional overcurrent relays that would otherwise interrupt the entire load. Furthermore such directional relaying would only operate after the faulted BES line is already removed from any connection at BES voltages via its high voltage (>100kV) circuit breakers. Viewed in an expansive way, the proposed 4.2.1 language could bring into scope these relays as well as tripping circuits of distribution voltage circuit breakers that are normally operated in a radial configuration. It would be reasonable for a TO to disable this relaying, rather than accept these consequences. In the previous comment period (Sept 2011), industry raised similar concerns and to most of the commenters, the SDT responded with the following statement: ” The SDT believes that the Applicability as stated in PRC-005-2 is correct and that it supports the reliability of the BES. The SDT observes that the approved Interpretation addresses the term, “transmission Protection System”, and notes that this term is not used within PRC-005-2; thus the interpretation does not apply to PRC-005-2. PRC-005-2 specifically addresses “Protection Systems that are installed for the purpose of detecting faults on BES Elements.” Please see Section 2.3 of the Supplementary Reference and FAQ document for additional discussion.” Unfortunately, this response fails to address the concerns raised above. Entergy previously suggested the following language for 4.2.1:”Protection Systems that are installed for the purpose of detecting faults on BES Elements (lines, buses, transformers, etc.) and trips an interrupting device that interrupts current supplied directly from the BES Elements.” This language is appropriate and addresses industry concerns. We ask that the SDT adopt this language as Section 4.2.1. SDT Response: The SDT believes that the Applicability, as stated in PRC-005-2, is correct and supports the reliability of the BES. The SDT observes that the approved Interpretation addresses the term, “transmission Protection System,” and notes that this term is not used within PRC-005-2; thus, the

Organization	Yes or No	Question 3 Comment
		interpretation does not apply to PRC-005-2. PRC-005-2 specifically addresses "Protection Systems that are installed for the purpose of detecting Faults on BES Elements." Please see Section 2.3 of the Supplementary Reference Document for additional discussion. Thank you for the opportunity to comment.
Response: Thank you for your comments. 1. Section 15.2 of the Supplementary Reference and FAQ document provides a technical explanation of how this type of test for a CT will verify the signal reaches the relay. 2. The SDT believes it is possible during a 12-year interval to find a reasonably low-risk opportunity to perform the required test and that performing the test satisfies FERC Order 693 "…that maintenance and testing of a protection system must be carried out within a maximum allowable interval that is appropriate to the type of the protection system and its impact on the reliability of the Bulk Power System." Please see Section 15.2.1 of the Supplementary Reference and FAQ document for examples of off-line tests that can minimize the risk you describe. 3. Reverse-looking relays (in the cited application) are not installed for the purpose of detecting faults on the BES and would not be subject to this standard. The SDT believes that the Applicability as stated in PRC-005-2 is correct and that it supports the reliability of the BES.		
Southern Company		1. We would like the SDT to consider rewording M5 as follows: The evidence may include any form of evidence indicating an entity is demonstrating efforts to correct identified Unresolved Maintenance Issues. Additionally: All of the examples of evidence should be moved to the Supp Ref doc and be there only for reference. 2. Page numbers should be visible on all pages.
Response: Thank you for your comments. 1. The SDT does not believe that the changes you suggest improve the standard. Regarding "demonstrate efforts to correct…," the SDT's intent is to allow an entity to furnish a way of addressing Unresolved Maintenance Issues without the formality and burden of a full-fledged Corrective Action Plan. 2. The SDT agrees and has referred the concern to NERC Staff for their consideration when preparing the documents for posting.		
Ingleside Cogeneration LP		Although Ingleside Cogeneration LP does not want to derail the improvements that the SDT has obviously made to PRC-005-1, we remain concerned that expansions in

Organization	Yes or No	Question 3 Comment
		scope of a BES Protection System will automatically roll over to other standards. For example, if the loss of a low voltage auxiliary transformer can trip a generator, its Protection System will be in-scope for PRC-005-2. It is not a big leap in logic to assume that the auxiliary transformer itself should be a BES Element - and subject to the whole body of CIP, MOD, IRO, and TOP standards. Our experience has been that Compliance authorities will make these assumptions, even if that was never the intent of the SDT. The effort to develop and maintain procedures, test results, and communications concerning every BES Element is not trivial - and a single instance of a missed requirement may lead to fines in the thousands of dollars. Ingleside Cogeneration is committed to take any action required to assure BES reliability, but NERC and the project teams must have evidence of its own that it is worth the cost.
Response: Thank you for your comments. The SDT believes that performing these maintenance activities will benefit the reliability of the BES.		
American Electric Power		1. As stated in our previous comments for R3, Table 1-5 notes a “mitigating device” as part of component attributes. The meaning of this phrase is open to interpretation and needs to be clearly defined. Is it a discrete device? A protection scheme? Either? The team’s response, by stating its intentions regarding this phrase, actually illustrates the need to provide clarity for this term within the standard. 2. As stated previously, under the time-based maintenance method and R3, the Entity will be required to utilize the minimum maintenance activities and maximum maintenance intervals prescribed within Tables 1-1 through 1-5, Table 2, and Table 3. Special Protection Systems, by their nature, may physically include components that are not listed in the NERC definition of Protection System and therefore are not included in the tables of PRC-005-2. The standard, as currently drafted, does not clearly provide a means for an Entity with a Special Protection System to establish both minimum maintenance activities and maximum maintenance intervals for components that have been declared by their Region as part of a Special Protection System but that are *not* included in the NERC definition of Protection System. For example, consider a Special Protection

Organization	Yes or No	Question 3 Comment
		System that is comprised of the following elements: Generating Unit Distributed Control System (DCS) - Qty 1Protective Relays - Qty 4 - Provide digital inputs to DCS Boiler Pressure Transmitters - Qty 2 - Provide analog inputs to DCS For a predetermined set of system events, the protective relays operate, indicating to the DCS that the event has occurred. If the pressure transmitters indicate that the boiler pressure exceeds a predefined threshold, the DCS responds by adjusting the analog output signals to the turbine valves. For compliance with the existing version of PRC-017-0, the owner of the above system has written a Maintenance and Testing Program that thoroughly tests the protective relays, DCS logic and analog inputs and outputs. However, under PRC-005-2, the owner of the system would not be able to use the proposed performance based method because the system does not have the required Segment population of 60 components. This leaves the owner no other option than the time based method. However, only the protective relays meet the NERC definition of Protection System and they are the only elements of this hypothetical SPS described in Tables 1-1 through 1-5. The existing PRC-005-2 draft does not contain time based activities that would be applicable to the DCS logic, analog inputs and analog outputs. Therefore, whereas the existing NERC standards demand the testing of these devices, NERC standards would no longer require their testing upon the implementation of PRC-005-2.
Response: Thank you for your comments. 1. A mitigating device is one that acts to respond as directed by a Special Protection System (SPS). It may be a breaker, valve, distributed control system, or any variety of other devices. 2. The SDT notes that the definition of a Special Protection System states "An automatic protection system designed to detect abnormal or predetermined system conditions, and take corrective actions other than and/or in addition to the isolation of faulted components to maintain system reliability." If the SPS you described meets this definition and contains Protection System components, then PRC-005-2 applies to those Protection System components.		
American Transmission Company, LLC		ATC recommends that the SDT change the text of "Standard PRC-005-2 - Protection System Maintenance" Table 1-5 on page 24, Row 1, Column 3" to: "Verify that a trip

Organization	Yes or No	Question 3 Comment
		coil is able to operate the circuit breaker, interrupting device, or mitigating device." Or alternately, "Electrically operate each interrupting device every 6 years." Basis for the change: Trip coils are designed to be energized no longer than the breaker opening time (3-5 cycles). They are robust devices that will successfully operate the breaker for 5,000-10,000 electrical operations. In addition, many utilities purchase breakers with dual redundant trip coils to mitigate the possibility of a failure. It is well recognized that the most likely source of trip coil failure is the breaker operating mechanism binding, thereby preventing the breaker auxiliary stack from opening and keeping the trip coil energized for too long of a time period. Therefore, trip coil failure is a function of the breaker mechanism failure. Exercising the breakers and circuit switchers is an excellent practice to mitigate the most prevalent cause of breaker failure. ATC would encourage language that would suggest this task be done every 2 years, not to exceed 3 years. Exercising the interrupting devices would help eliminate mechanism binding, reducing the chance that the trip coils are energized too long. The language, as currently written in Table 1-5 row 1, will also have the unintentional effect of changing an entities existing interrupting device maintenance interval (essentially driving interrupting device testing to a less than 6 year cycle).ATC continues to recommend a negative ballot since we believe that the testing of "each" trip coil will result in the increased amount of time the BES is in a less intact system configuration. ATC hopes that the SDT will consider these changes.
Response: Thank you for your comments. The SDT sees no appreciable improvement in the standard with your proposed change and respectfully declines to make the modification.		
Colorado Springs Utilities		Colorado Springs Utilities votes "negative" based on the document "Draft SAR for Phase 2 of Project 2007-17" under the section titled Brief Description of Proposed Standard Modifications/Actions, which states " The Standard Drafting team shall modify NERC Standard PRC-005-2 to add reclosing relays to the standard. In order to do so, the definition of Protection System shall be revised to include reclosing relays, the Facilities portion of the Applicability of the Standard shall be revised to describe

Organization	Yes or No	Question 3 Comment
		those reclosing relays that are included within the standard, and appropriate minimum maintenance intervals (with maximum allowable intervals) shall be added to the standard. The Standard Drafting team shall also make any other changes that are necessary to explicitly address reclosing relays, but shall not make general revisions to the standard, either in content or arrangement." Colorado Springs Utilities position is reclosing relays are used as part of the system restoration process, and should not be associated with the protection or reliability of the system. Reclosing relays should be grouped with SCADA controls of breakers and manual controls of breakers, and should be tested with the same frequency. Breaker reclosing is not used on many lines, and is disabled on many lines. Automatic Breaker Reclosing is a system enhancement, not a system requirement.
Response: Thank you for your comments. The SDT notes that the draft SAR for Phase 2 of Project 2007-17 is not applicable to the current successive ballot and was posted for informational purposes only. In Order 758, FERC directed NERC to include reclosing relays in a future version of PRC-005; the SDT developed this draft SAR to address FERC's directive.		
Duke Energy		Duke Energy votes "Negative" because we strongly object to the wording in the Applicability section 4.2.1. We believe that the wording change to PRC-005-2 draft 4 after the previous Successive Ballot but prior to the associated Recirculation Ballot expanded the reach of the standard to relaying schemes that detect faults on the BES but which are not intended to provide protection for the BES. The SDT's response to our comment directs us to Section 2.3 of the Supplementary Reference And FAQ Document which states "There should be no ambiguity: if the element is a BES element then the Protection System protecting that element should be included within this Standard." We agree with that statement, but point out that Section 4.2.1 is inconsistent with that statement, and has a much broader reach because it includes devices that detect Faults on the BES but which do NOT provide protection for the BES. Compliance audits will be driven by the words in the standard, not the explanations in the Supplementary Reference And FAQ Document. We would appreciate a response to our concern that explains the reliability benefit associated

Organization	Yes or No	Question 3 Comment
		with this expansion of scope, and which specifically addresses the following Duke Energy situation: Duke Energy's standard protection scheme for dispersed generation at retail stations would become subject to the standard due to the changes in section 4.2.1. These protection schemes are designed to detect faults on the BES, but do not operate BES elements nor do they interrupt network current flow from the BES. In the most recent draft, the relays, current transformers, potential transformers, trip paths, auxiliary relays, batteries, and communication equipment associated with the dispersed generation protection scheme would be subject to the requirements in PRC-005-2. Previous drafts of the standard would not have required Duke Energy to maintain the protection system components associated with dispersed generation schemes at retail stations in accordance to the requirements in PRC-005-2. The new wording in section 4.2.1 would add significant O&M costs and resource constraints due to the inclusion of protection system devices at retail stations without increasing the reliability of the BES. Duke Energy does not believe it was the intent of the standard to include elements that did not have an impact on the reliability of the BES. Duke Energy would prefer the following wording for Section 4.2.1: Protection Systems that are installed for the purpose of protecting BES Elements (lines, buses, transformers, etc.)".FERC's September 26, 2011 Order in Docket No. RD11-5 approved NERC's interpretation of PRC-005-1 R1 and R2, stating: "The interpretation clarifies that the Requirements are "applicable to any Protection System that is installed for the purpose of detecting faults on transmission elements (lines, buses, transformers, etc.) identified as being included in the [BES] and trips an interrupting device that interrupts current supplied directly from the BES." This interpretation is consistent with the Commission's understanding that a "transmission Protection System" is installed for the purpose of detecting and isolating faults affecting the reliability of the bulk electric system through the use of current interrupting devices."
Response: Thank you for your comments. The SDT believes the Applicability as stated in PRC-005-2 is correct and supports the reliability of the BES. All Protection Systems installed for the purpose of detecting faults on the BES need to be maintained per the requirements of PRC-005-2. The SDT observes that the approved Interpretation addresses the term, "transmission Protection System", and notes that this term is not used within		

Organization	Yes or No	Question 3 Comment
PRC-005-2; thus the Interpretation does not apply to PRC-005-2. Please see Section 2.3 of the Supplementary Reference and FAQ document for additional discussion.		
Entergy Services		Entergy provides the following comments to achieve consistency in the written standards: • Numbers indicating measurable quantities should be numbers: 95%, 5%, etc. and not spelled out. • Words indicating a specific document or entity should be capitalized: this Standard • Words indicating generic devices should not be capitalized: components, faults, monitors, misoperation • 4. If two words go together with a singular meaning they should both be either capitalized or not: Communication Systems
Response: Thank you for your comments. The SDT followed NERC's style guide for the various issues you point out.		
FirstEnergy		FirstEnergy supports the standard and thanks the drafting team for all their hard work.
Response: Thank you for your comments.		
Luminant		In addition to the revised Supplemental Reference and FAQ guide revision requested in question 2, Luminant recommends that Table 1-5; Line 1 and 4 be revised to specifically state that only BES elements (circuit breakers/interrupting devices) are to be tested. There is no benefit to the BES system for testing the non-BES breakers and some locations, trip testing of the breakers would cause a unit black-out due to unit design. Some units do not have start-up transformers. By performing these tests, there is a risk of causing unit damage while the unit is off-line. Therefore Luminant recommends that Table 1-5 be revised to only require BES breakers be tested for compliance purposes. This would be consistent with the requirements covered in Table 3 for UFLS Systems.
Response: Thank you for your comments.		

Organization	Yes or No	Question 3 Comment
The SDT revised Section 15.3.1 of the Supplementary Reference and FAQ document to address this concern, and does not believe that further revision of the standard is necessary.		
Public Utility District No. 1 of Okanogan County		In tables 1-4 with regards to station batteries. 1. DC Supply voltage. Is this reading taken off the batteries or out of the charger? Which read needs to be documented? 2. Unintentional grounds. If the charger has the ability to detect and alarm on unintentional grounds, do we need to manually check this as well? 3. In the 18 month section there is a reference to Float voltage of charger. How do we document in our procedure? Can we use SCADA? 4. In the NICAD battery section. Why can't we do impedance testing? Why only load testing? 5. In table 1-5 there is mention of "Lockout Devices" does this mean that 86 relays are being brought into scope? 6. In table 2 there is discussion with regard to Alarm paths and alarm path monitoring. Table 1-5 item 4 discusses Auxiliary Relays in the control circuit path. Typically, Auxiliary relays in this scenario are closed contacts and open when in an alarmed state. For example, a low SF6 alarm contacts on a breaker interrupts the trip circuit and prevents the breaker from operating. Does this type of auxiliary relay need to be tested every 12 years? 7. For monitoring transmission PTs- Can we measure low side voltage (13kv) PTs multiplied by the power transformer ratio to verify transmission PT accuracy? 8. Table 1-3 describes independent "measurements continuously verified by comparison" Does separate AC measurement need to be connected to same relay? or can it be connected to separate relay with comparison done in SCADA?
Response: Thank you for your comments. 1. The verification of dc voltage is simply an observation of battery voltage to prove that the charger has not been lost or is not		

Organization	Yes or No	Question 3 Comment
		malfunctioning, and the standard is indifferent as to where the voltage is actually measured. However, Section 15.4.1 of the Supplementary Reference and FAQ document suggests that this voltage be optimally measured at the battery's main terminals. 2. Per Table 1-4(f) and Table 2, if your charger has the ability to detect and alarm on unintentional grounds and meets the Table 2 requirements, no periodic inspection of unintentional dc grounds is required. 3. As explained in Section 15.4.1 of the Supplementary Reference and FAQ document, the maintenance activity of verifying the float voltage of the battery charger is not to prove that a charger is lost or producing high voltage on the station dc supply, but rather to prove that the charger is properly floating the battery within the proper voltage limits. Per Table 1-4(f) and Table 2, if your charger has the ability to monitor and alarm to ensure correct float voltage is being applied on the station dc supply and meets the Table 2 requirements, no periodic verification of float voltage of battery charger is required. The standard is proscribed from describing "how". It is left to the entity to determine what methods best address their program. 4. At this time - with the exception of the results of a capacity test - the drafting team is unaware of any published data for nickel-cadmium battery properties that can be measured and trended against the station battery baseline. 5. As explained in Section 15.3 of the Supplementary Reference and FAQ document, if the lock-out relays (86) are electromechanical type components, then they must be trip tested per Table 1-5. 6. As explained in Section 15.3 of the Supplementary Reference and FAQ document, contacts of the 86 or 94 that pass the trip current on to the circuit interrupting device trip coils will have to be checked as part of the 6 or 12 year requirement. Normally-open contacts that are not used to pass a trip signal and normally-closed contacts do not have to be verified. 7. There are multiple methods to verify the current and voltage signal values as explained in Section 15.2 of the Supplementary Reference and FAQ document. 8. It is left to the entity to determine what methods best address their program. Section 15.2 of the Supplementary Reference and FAQ document discusses various methods of conducting this comparison.
Manitoba Hydro		Manitoba Hydro is maintaining our negative vote based on our previously submitted comments (see comments submitted in the comment period ending on March 28th, 2012).
Response: Thank you for your comment. The SDT has also not changed its position from that expressed in response to the earlier comments.		
Oncor Electric Delivery		On Page 89 of the Supplementary reference and FAQ Draft document on the References page (reference #12) the correct number of the standard should read "Std

Organization	Yes or No	Question 3 Comment
		450-2010" instead of "Std 45-2010."
Response: Thank you for comment. The Supplementary Reference and FAQ document has been corrected.		
Dominion		On the Redline version of the standard, page 11 Version History; Version 2 Action, should PRC-005-1a be listed as PRC-005-1b and PRC-017 listed as PRC-017-0. Additionally, it does not appear that the Version History has captured a complete record of all revisions to this standard.
Response: Thank you for your comments. The references to the approved standards and the Version History have been corrected.		
Brazos Electric Power Cooperative		Please see the formal comments submitted by ACES Power Marketing.
Response: Thank you for your comment. Please see our responses to the comments submitted by ACES Power Marketing.		
PPL Generation, LLC on behalf of its Supply NERC Registered Entities		PPL Generation, LLC thanks the SDT for their effort on this latest version of the standard and has voted affirmatively. We offer the following comments/suggestions: 1.) PPL Generation, LLC would like more direction on how the Tables 1-3 are to be interpreted. Under the left column "Component Attributes," it is not completely clear as to which situation is applicable in order to know what "Maintenance Activity" applies. Either the table's "Component attributes" or the statement "Include the applicable monitored Component attributes applied to each Protection System Component Type consistent with the maintenance intervals specified in Tables 1-1 through 1-5, Table 2, and Table 3 where monitoring is used to extend the maintenance intervals beyond those specified for unmonitored Protection System Components" could be more prescriptive on the specific component attributes to provide entities direction as to when exactly each table is to be followed. 2.) In regards to Unresolved Maintenance Issues, PPL Generation, LLC is concerned with the use of the word "efforts" in regards to the use in "shall demonstrate efforts" in Requirement 5. We suggest that either a formal definition of "effort" is provided or more clarity is added in the Requirement 5, shown below, that gives a quantitative

Organization	Yes or No	Question 3 Comment
		scale of what constitutes an effort. "Each Transmission Owner, Generator Owner, and Distribution Provider shall demonstrate efforts to correct identified Unresolved Maintenance Issues." In its current form, "efforts" can be broadly interpreted by auditors as any number of different required actions of an entity and could potentially lead to inconsistencies in applying the term throughout the regions.
Response: Thank you for your comments. 1. The left column of the Tables describes the monitoring attributes (if any) that are available on the particular components. The center and right columns describe the related maximum maintenance intervals and minimum maintenance activities. **2.** The SDT believes there is sufficient understanding in the industry for the term "efforts" and the risk of compliance jeopardy is minimal.		
Progress Energy		1. R3 and the VSL for R3 seem to imply that an entity would not be in violation of this standard if they exceed their PSMP intervals (including any program grace) as long as the maintenance is performed within the maximum intervals prescribed within the tables. This interpretation was further supported in the previous draft of the Supplemental Reference (Section 8.2.1, page 35), which stated: "According to R3, a strictly time-based maintenance program would only be in violation if the maximum time interval of the Tables is exceeded." However, this statement has been removed from the supplemental document under the latest draft revision. Would the entity be noncompliant if they exceed their PSMP interval but not the maximum table interval? 2. Table 1-4(e): Typo. "Any Protection System dc supply used only for tripping only...." 3. Page 51, 4th paragraph, 5th line: Typo "thre" should be "three."
Response: Thank you for your comments. 1. The standard is defining maximum allowable intervals and minimum acceptable activities for a PSMP. Requirement R3 was revised recently to establish that entities must maintain their Protection System components, at a minimum, in accordance with the relevant tables. Entities are empowered to develop PSMPs that exceed these requirements if they determine such a PSMP is necessary; however, according to Requirement R3, the entity will not be held to their more-aggressive (than the tables) PSMP for compliance monitoring purposes.		

Organization	Yes or No	Question 3 Comment
2. The SDT made the suggested editorial change to Table 1-4(e). 3. The Supplementary Reference and FAQ document has been corrected as suggested.		
ReliabilityFirst		ReliabilityFirst offers the following comments for considerations: 1. General Comment a. ReliabilityFirst believes not only should there be testing required for individual components (as required Protection System Maintenance Program), ReliabilityFirst believes that the entire Protection System (consisting of all Protective relays, communications systems, Voltage and current sensing devices, etc.) should be tested as a whole. Individually each component may test successfully but while tested as a complete Protection System (through interaction between all the interdependent components), deficiencies in settings along with logic and wiring errors could be discovered. 2. Requirement R5 a. ReliabilityFirst believes the language in Requirement R5 ("...shall demonstrate efforts to correct...") is subjective and non-measurable. It will be difficult in determining what amount of "demonstration" an entity will need to provide in order to be compliant along with lack of timeframe in which the correction needs to be completed. While RFC understands it is hard to prescribe a specific timeframe/deadline (it can depend on various number of supply, process and management problems), RFC believes at a minimum, the applicable entity should be required to develop a Corrective Action Plan to address the Unresolved Maintenance Issue. ReliabilityFirst offers the following modification for consideration: "Each Transmission Owner, Generator Owner, and Distribution Provider shall put in place a corrective action plan to remedy all identified Unresolved Maintenance Issues."
Response: Thank you for your comments. 1. The SDT does not believe it feasible to craft requirements for testing an entire Protection System as a whole that would simultaneously prove performance of every component and believes such invasive testing would jeopardize BES reliability. 2. The SDT's intent is to furnish a way for an entity to address Unresolved Maintenance Issues without the formality and burden of a		

Organization	Yes or No	Question 3 Comment
full-fledged Corrective Action Plan.		
Seattle City Light Operations		SCL supports the position of WECC PNGC with regard to the position paper VRF/VSL recommendation. Specifically, it is the contention of PMGC and members that small entities with maybe 2 or 3 components within a Component Type that sustain a violation will unnecessarily be subjected to a “severe” or “high” VSL assignment due to the % based parameter. We feel the SDT did not adequately address our concerns during the last ballot/comment period. While this is a non-issue for larger entities with hundreds or thousands of individual components, we believe this exposes smaller entities to unnecessary compliance risk. 1. The PNGC Comment Group takes issue with the associated VSLs for R3. For a small entity using a time based maintenance program, even one missed interval could be enough to elevate them to a high VSL despite the limited impact on the Bulk Electric System. Consider an entity with 9 total components within a specific Protection System Component Type. One violation would mean an 11% violation rate, enough to catapult them into a High VSL. Given NERC Guidance (following), this seems to be a contradiction given the language of “...more than one” [NERC Guidance on VSL assignment: i. LOWER: Missing a minor element (or a small percentage) of the required performance. ii. MODERATE: Missing at least one significant element (or a moderate percentage) of the required performance. iii. HIGH: Missing more than one significant element (or is missing a high percentage) of the required performance or is missing a single vital component. iv. SEVERE: Missing most or all of the significant elements (or a significant percentage) of the required performance.] Thus we support the WECC PNGC suggestion to change the language for “Lower VSL” for R3 to: 'For Responsible Entities with more than a total of 20 Components within a specific Protection System Component Type in Requirement R3, 5% or fewer have not been maintained...' OR 'For Responsible Entities with a total of 20 or fewer Components within a specific Protection System Component Type, 2 or fewer Components in Requirement R3 have not been maintained...'

Organization	Yes or No	Question 3 Comment
Response: Thank you for your comments. The SDT respectfully disagrees and believes that the Standard appropriately incorporates and accounts for the system risks and burdens of maintenance for both large and small entities. The VSLs were developed in accordance with the "FERC VSL Order" and the NERC criteria; for stepped VSLs - Lower VSL is "5% or less", Medium VSL is "more than 5% up to (and including) 10%", High VSL is "more than 10% up to (and including) 15%", and Severe VSL is "more than 15%".		
Public Service Company of New Mexico		Table 1-1 Component Type - Protective Relay and Table 1-2 Component Type - Communications Systems refer to Table 2 Alarm Paths and Monitoring for monitoring related attributes. However, the maximum maintenance interval in rows referring to Table 2 in both Tables 1-1 and 1-2 is 12 calendar years whereas there is a row in Table 2 that if there is an Alarm Path with monitoring (row 2 of Table 2), no periodic maintenance is required. Does this mean that even if there is an Alarm Path with monitoring for which no periodic maintenance is required, the component type - Protective Relay or Communications Systems will still be required to be maintained within the maximum 12 calendar years interval? This appears to be contradictory especially since rows in Tables 1-3, 1-4(f), and 1-5 that refer to Table 2 have "no periodic maintenance specified" under maximum maintenance interval. This also appears to be contradictory to the text provided under bullet 1 of Section 5.2 Extending Time-Based Maintenance which states that - If continuous indication of the functional condition of the Component is available (from relays or chargers or any self-monitoring device), then the intervals may be extended, or manual testing may be eliminated." Rows referring to Table 2 in Tables 1-1 and 1-2 do not suggest that manual testing will be eliminated as it is requiring a 12 calendar year maintenance time interval even if it meets the requirements under table 2 for alarm path with monitoring. PNM recommends adding the following under Maximum Maintenance Interval to be consistent with other tables 1-3, 1-4(f), and 1-5 - "12 calendar years OR no periodic maintenance specified".
Response: Thank you for your comments. For protective relays and communications systems, the only maintenance activity in the last line of the related table is to verify those unmonitored inputs and outputs that are essential to the proper functioning of the Protection System. The SDT sees no appreciable		

Organization	Yes or No	Question 3 Comment
improvement in the standard with your proposed change and respectfully declines to modify the standard.		
Bonneville Power Administration		1. Table 1-2: Communication Systems: BPA believes that the entire section of Table 1-2 needs clarity. A channel, channel performance criteria, & communication system all have very precise definitions in the communications world. (Please refer to Supplemental Frequency AQ - Figure 1 - Typical Transmission System Diagram, Telecommunications Network Cloud)When referring to the terms in Table 1-2, if the drafting team is referring to the 'telecommunications cloud', this section is unclear. BPA believes it is clearer if the drafting team is referring to the two telecommunications equipment panels and requests documented clarification. The traditional term for this would be teleprotection channel or teleprotection function. BPA assumes the intention was teleprotection channel. BPA recognizes that the teleprotection equipment panels, in many modern cases, are built into the relay. For background information, the Telecommunications Network is composed of multiple Communication Systems (40 to 50 is not uncommon) that contain multiple thousand (5-6K) pieces of equipment. These systems and equipment are tied together with hundreds of thousands of Communication Channels and Tributaries. Most of the Channels and Tributaires have, at least a primary and backup (WECC Guideline: Design of Critical Communications Circuits), and some have multiple primary's and backups. All of these are needed to create the circuit connections, as indicated on the diagram from one teleprotection panel to another teleprotection panel. Given the above scenario - the confusion is possible. As an example, for the component attribute: 'Any unmonitored communication system necessary for the correct operation of the protective functions, and not having all the monitoring attributes of a category below.' The 4 calendar month maintenance activity is to: 'Verify that the communications system is functional.' The questions that arise are which systems, the drop system or the transport system? The whole system or just the part carrying the protective signals? What about the channels interconnecting the various systems and so on? BPA suggests clarifying: Any unmonitored teleprotection function necessary for the correct operation of the protective

Organization	Yes or No	Question 3 Comment
		functions, and not having all the monitoring attributes of a category below. The 4 calendar month maintenance activity is to: 'Verify that the teleprotection function is functional' BPA believes this is a much better approach as it identifies only that the teleprotection panels must get inputs and outputs to the relays between them. BPA believes more clarity is still needed. A simple example of an old tone based FSK transfer Trip System over a single point to point analog MW radio channel; the teleprotection panel will normally transmit a guard tone in a particular spectrum over a single radio channel to the teleprotection panel at the far end. BPA understands that one way to verify that the teleprotection function is serviceable in a 4 month maintenance activity is if the guard signal arrives at the opposing end, correct? BPA infers that this is efficient as entities can now monitor loss of guard and have a continuously monitored system which will result in performing just a12 year maintenance. Is this correct? This raises the question of the trip function. Until the trip function is energized from the relay, the circuitry sending the trip by initiating a FSK in not functioning. Does this function needs to be check in addition to the guard function? This raises the question of the MW radio channel. BPA recognizes that the FSK trip signal travels over different spectrum in the analog MW radio. Even if the radio will transmit a Guard FSK signal to the far end, it will not necessarily transmit a Trip FSK signal to the far end (a common hidden failure mode in many MW systems). Do entities need to check for guard at the far end and test that a FSK Trip signal propagates through the radio system and is received at the teleprotection panel? BPA requests clarification in the followings scenario: Using testing inputs as opposed to operating inputs that trips and guards may be initiated from a different set of inputs of the teleprotection panel, and monitored from a different set of outputs on the teleprotection panel (very common on teleprotection equipment). The test might work, but an actual Trip signal would not work (a common hidden failure mode on current available equipment). If one were to say 'good enough' for a 4 month test (and hope any auditors agree if there is ever a false operation). How about the 12 calendar year test? For a point to point analog MW radio,

Organization	Yes or No	Question 3 Comment
		there is only a single channel that can be tested for passage of guard and trip tones. If the radio is redundant, which it most likely is (WECC Guideline: Design of Critical Communications Circuits) then this has to be done twice, once for each path. Can the drafting team clarify this scenario? In a more typical real-world case, the circuit connection, between the two teleprotection panels, will transverse multiple redundant communications systems. If it crosses 4 redundant systems in the communications cloud, then there are a total of 4^2 or 16 possible communication channels, each with different test criteria, that need to be tested. Additionally, the channels are rerouted manually and automatically much faster than a 12 year cycle (daily is not uncommon). Do all these combinations need to be tested? This discussion illustrates the confusion of the current wording. BPA recommends that: If the intention is to test in the 'cloud' or the performance of the 'cloud', BPA believes there needs to be a new standard, or set of standards created to deal with the intricacies of the telecommunication cloud. If the intention was to test the teleprotection channel, BPA believes additional clarity needs to be provided to address the dynamic redundancies and rerouting of the communications system. If the intention was to test the teleprotection function BPA believes additional clarity needs to be provided to test/monitor the functions (inputs and outputs) between the teleprotection panels. 2. Table 1-4(a):VLA Battery: 4 Months/Inspect/Electrolyte Level BPA believes that for a properly designed and installed steady state float charge/long duration discharge type battery plant this is not needed. The inspection at 4 Month intervals will unearth catastrophic failures (Split cells, severe overcharging, etc...). These types of failures can happen anytime, and need to be designed around. Unless the battery plant is under high cyclic load, water usage can be handled in a 12/18 month maintenance cycle. Severe overcharging needs to be dealt with by design/maintenance practices (for example: an Appropriate high voltage alarmed with an immediate call out) since 4 months is too long to wait to detect the condition. Minor overcharging will not be detectable in a 4 month interval (and one wants to very slightly overcharge a battery verse any individual cell being

Organization	Yes or No	Question 3 Comment
		undercharged, but that is a whole different technical discussion). IEEE484 specifies ventilation should be provided for the worst-case hydrogen generation due to overcharging. Other than an inherent manufactures defect that can happen anytime 24/7, splitting cells due to sulfation build up is a slow know process that can be handled in a 12/18 month maintenance cycle with a good visual inspection. Although this is in line with IEEE450, given the specific type of battery configuration in the utility world, this is excessive. Should there be a unique battery plant design, then it is incumbent on that utility to have appropriate shorter intervals. BPA is in support of "For unintentional grounds" and recognizes that it does not apply to intentionally grounded battery systems (teleprotection systems run off of communication batteries in sites where there is no station battery {i.e.: Grand Coulee/Lower Snake}).In general there are two types of batteries used by utilities, outside of their control centers, which will be supplying protective systems. The vast majority is the station battery, which is described very well in the IEEE standards: Switchgear control battery applications typically require output current levels that vary over a relatively long period of time. The battery operates on a float charge during steady state conditions. The battery charger powers relays, indicating lights, and peripheral devices during normal conditions. Instantaneous operation of the circuit breaker and switches require battery output current. Initially, this current may be relatively high for a short duration and then reduce for an extended period of time, followed by another high operating current demand. If the charger output is lost, these low-level currents are supplied by the battery for a specified period. The second is a telecommunications battery supplying the teleprotection equipment (excluding the telecommunications batteries supplying only the communication cloud), which are described very well in the IEEE standards: Telecommunication systems are typically of high reliability, with a minimum uptime of 99.99% is often required. Although the batteries are sized for long duration discharge, short duration discharges are usually the case. Excess charging capacity is often available because of redundant charger configurations and engineered

Organization	Yes or No	Question 3 Comment
		overcapacity. The reserve battery time is usually of long duration.
Response: Thank you for your comments. 1. The SDT does not necessarily agree that the term "teleprotection" is universally used or interpreted consistently in the utility protection industry and believes its use in the standard would not improve the standard. Your comments in the complexity and intricacy of the telecommunications "cloud" are well-taken; however, it was the SDT's intent to require an overall functional test of the "cloud"-based path, but not an exhaustive test of each and every individual channel that could be involved. Yes, there is some risk in a FSK-based guard/trip scheme that the trip function may not perform even if the guard function does, but the SDT sees this risk as manageable and in line with other risks inherent in interval-based maintenance. 2. This standard is applicable to station batteries. Please see Section 15.4.1 of the Supplementary Reference and FAQ document for more discussion. The scope of this standard does not include communication site batteries. The SDT believes that PRC-005-2 strikes an appropriate balance between maintenance burden, failure modes, manufacturer recommendations and IEEE battery guidelines.		
Independent Electricity System Operator		The IESO continues to disagree with the VRF assigned to the new Requirements R3 and R4. R3 and R4 ask for implementing the maintenance plan (and initiate corrective measures) whose development and content requirements (R1 and R2) themselves have a Medium VRF. Failure to develop a maintenance program with the attributes specified in R1, and stipulation of the maintenance intervals or performance criteria as required in R2, will render R3/R4 not executable. Hence, we reiterate our request to change R3's VRF to Medium.
Response: Thank you for your comments. The SDT respectfully disagrees and contends that the consequences of failing to maintain Protection Systems in the required time frames merit a High VRF.		
PNGC Small Entity Comment Group		The PNGC Small Entity Comment Group appreciates the hard work of the Standards Development Team on this difficult and complex project. However we are disappointed with the response to our concerns over the VSL matrix and although we believe on balance this should not be the sole reason for voting "no", we find it difficult to re-cast a "yes" vote and will therefore vote "abstain" to maintain the integrity of the quorum and reflect our position. Your response to our comment;"1.

Organization	Yes or No	Question 3 Comment
		A smaller entity will have less to maintain in accordance with the standard; and, thus, the percentages are still appropriate." reflects a position that indicates are cursory and dismissive review of our concern. We would counter that because a smaller entity has less to maintain, a solely percentage violation measure is therefore inappropriate. We've appended our original comment below in addition to the SDT response. PNGC Comment:1. The PNGC Comment Group takes issue with the associated VSLs for R3. For a small entity using a time based maintenance program, even one missed interval could be enough to elevate them to a high VSL despite the limited impact on the Bulk Electric System. Consider an entity with 9 total components within a specific Protection System Component Type. One violation would mean an 11% violation rate, enough to catapult them into a High VSL. Given the "NERC Guidance (Below), this seems to be a contradiction given the language of "...more than one". a. NERC Guidance on VSL assignment: i. LOWER: Missing a minor element (or a small percentage) of the required performance ii. Moderate: Missing at least one significant element (or a moderate percentage) of the required performance. iii. High: Missing more than one significant element (or is missing a high percentage) of the required performance or is missing a single vital component. iv. Severe: Missing most or all of the significant elements (or a significant percentage) of the required performance. We suggest changing the language for "Lower VSL" for R3 to: For Responsible Entities with more than a total of 20 Components within a specific Protection System Component Type in Requirement R3, 5% or fewer have not been maintained... Or for Responsible Entities with a total of 20 or fewer Components within a specific Protection System Component Type, 2 or fewer Components in Requirement R3 have not been maintained... SDT response: 1. A smaller entity will have less to maintain in accordance with the standard; and, thus, the percentages are still appropriate.
Response: Thank you for your comments. The SDT respectfully disagrees and believes that the Standard appropriately incorporates and accounts for the system risks and burdens of maintenance for both large and small entities. The VSLs were developed in accordance with the "FERC VSL Order" and the NERC criteria; for stepped VSLs - Lower VSL is "5% or less", Medium VSL is "more than 5% up to (and including) 10%", High VSL is		

Organization	Yes or No	Question 3 Comment
"more than 10% up to (and including) 15%", and Severe VSL is "more than 15%".		
US Bureau of Reclamation		The reliability level for protection systems has been lowered by eliminating the requirement for entity defined maintenance and testing procedures. Currently the draft only prescribes that the elements are identified as to when they will be maintained. The FAQ suggested that the PRC-005 did not have sufficient specificity with regard to the PSMP requirement. The entity no longer must be able to document that they were maintained in accordance with any prescribed method, jus that they were maintained in accordance within an acceptable interval. Second, the measure for R1 does not specific what evidence is considered acceptable. This makes the standard hard to enforce.
Response: Thank you for your comments. The standard is defining maximum allowable intervals and minimum acceptable activities for a PSMP. Entities are empowered to develop PSMPs that exceed these requirements if they determine such a PSMP to be necessary. Measure M1 offers examples of documentation that should ease compliance and enforcement.		
Seminole Electric Cooperative, Inc		1. The SDT has provided ONE Protection System Component with two differing maintenance periods, the lockout (86) device. Six years is used for the lockout operation and twelve years is used for contact testing of the lockouts. Earlier the SDT had a similar arrangement with microprocessor relays, the microprocessor relay would be tested on a twelve year cycle but the microprocessor's electro-mechanical trip outputs were to be tested on a six year cycle. The SDT then made a decision that the single microprocessor asset would have a common testing cycle of twelve years, reasonably considering it a single asset with a single maintenance cycle of 12 years. To eliminate confusion with lockout relays, it is recommended that a similar decision be made by the SDT to make a single lockout relay asset have a common maintenance cycle of twelve years. The lockout relay twelve year cycle would include both the lockout operational test and the lockout relay tripping contact tests. This twelve year cycle would also be in direct maintenance alignment with other microprocessor relays and auxiliary relay testing cycles.

Organization	Yes or No	Question 3 Comment
		2. In addition, the sudden pressure relays and their integral control circuit should either be included or excluded. This is a compliance trap and will lead to many findings of non-compliance, based on sudden pressure relays not being included in many prior versions and currently not included in this version, except for their DC control circuit.
Response: Thank you for your comments. 1. The SDT believes that electromechanical lockout relays need periodic operation. As such, these devices are required to be exercised at the same 6 year interval required for electromechanical relays. The SDT recognizes the risk of human error trips when working with testing of lockout devices but believes these risks can be managed. Performance based maintenance is an option if you want to extend the intervals beyond 6 years. However, the SDT modified Table 1-5 to remove other auxiliary relays, etc, from this activity, and clarified that the verification of such devices is included within the 12-year unmonitored control circuitry verification. **2.** The trip path from a sudden pressure device is a part of the Protection System control circuitry. The sensing element is omitted from PRC-005-2 testing requirements because the SDT is unaware of industry recognized testing protocol for the sensing elements. The SDT believes that Protection Systems that trip (or can trip) the BES should be included. This position is consistent with the currently approved PRC-005-1 and with the SAR for Project 2007-17.		
Florida Municipal Power Agency		1. The SDT is still not agreeing with the applicability as interpreted and approved by FERC PRC-005-1b Appendix 1 that basically says that applicable Protection Systems are those that protect a BES Element AND trip a BES Element. The interpretation states: In these two standards, use of the phrase transmission Protection System indicates that the requirements using this phrase are applicable to any Protection System that is installed for the purpose of detecting faults on transmission elements (lines, buses, transformers, etc.) identified as being included in the Bulk Electric System (BES) and trips an interrupting device that interrupts current supplied directly from the BES. The SDT continues to ignore this FERC approved interpretation, and this omission causes us to vote Negative again. The basic issue is that some distribution protection will be swept in with the applicability of the standard, which states: 4.2.1 Protection Systems that are installed for the purpose of detecting Faults on BES Elements (lines,

Organization	Yes or No	Question 3 Comment
		buses, transformers, etc.) 2. Many (most) network distribution systems that have more than one source into a distribution network will have reverse power relays to detect faults on the BES and trip the step-down transformer to prevent feedback from the distribution to the fault on the BES. This is not a BES reliability issue, but more of a safety issue and distribution voltage issue. These relays would be subject to the standard as the applicability is currently written, but, should not be and they are currently not within the scope of PRC-005-1b Appendix 1 because the step-down transformer (non-BES) is tripped and not a BES Element (hence, the "and" condition of the interpretation is not met). There are many other related examples of distribution that might be networked or have distributed generation on a distribution circuit where such reverse power relays, or overcurrent relays with low pick-ups, are used for safety and distribution voltage control reasons and are not there for BES Reliability. To make matters worse, for these Reverse Power relays, it is pretty much impossible to meet PRC-023 because the intent of the relay is to make current flow unidirectional (e.g., only towards the distribution system) without regard for the rating of the elements feeding the distribution network. So, if these relays are swept in, and if they are on elements > 200 kV, then the entity would not be able to meet PRC-023 as that standard is currently written. So, the SDT should have adopted the FERC approved interpretation. We have made this recommendation several times before.

Response: Thank you for your comments.

1. The SDT believes the Applicability as stated in PRC-005-2 is correct and supports the reliability of the BES. The SDT observes that the approved interpretation addresses the term, “transmission Protection System”, and notes that this term is not used within PRC-005-2; thus the interpretation does not apply to PRC-005-2. PRC-005-2 specifically addresses “Protection Systems that are installed for the purpose of detecting faults on BES Elements.” Please see Section 2.3 of the Supplementary Reference and FAQ document for additional discussion.
2. In the case you cite, the transformer is likely not a BES element; thus reverse power relays, even if installed to detect a fault in the transformer rather than actually to detect transformer energizing current, would not be included (as they are not installed for the purpose of detecting a fault on the BES). Please note that reverse power relays respond to real power (watts) instead of

Organization	Yes or No	Question 3 Comment
reactive power, and fault current is highly reactive.		
Tennessee Valley Authority		This comment is regarding the Implementation Plan for Requirements R3 and R4, 1. (Page 3 of 5) of The Implementation Plan for Project 2007-17 Protection Systems Maintenance and Testing PRC-005-02. Number 1. states: For Protection System component maintenance activities with maximum allowable intervals of less than one (1) calendar year, as established in Tables 1-1 through 1-5: o The entity shall be 100% compliant with PRC-005-2 on the first day of the first calendar quarter eighteen (18) months following applicable regulatory approval, or in those jurisdictions where no regulatory approval is required, on the first day of the first calendar quarter thirty (30) months following NERC Board of Trustees adoption or as otherwise made effective pursuant to the laws applicable to such ERO governmental authorities. TVA Comment: Even though TVA has already started a plan to address this issue, it will take several years to implement automatic checkback on 541 carrier blocking sets on the TVA system. TVA performed quarterly testing from 2000 through 2007, then after data showed failures not attributed to signal margin, the test was changed to twice a year in 2008. TVA carrier failure rate has not increased since the frequency was changed in January 2008 from 4 tests/year to 2 tests/year. We suggest a graduated implementation plan for this effort similar to number 3 (being compliant 30% in 24 months, 60% in 36 months, and 100% in 48 months) on Pages 3 and 4 of 5.
Response: Thank you for your comments. If an entity's experience is that these components require less-frequent maintenance, a performance-based program in accordance with Requirement R2 and Attachment A is an option. Your comments on your failure rates seems to indicate that you are performing a failure rate analysis similar to what is required under Attachment A for performance maintenance. While it is unfortunate that you feel you cannot meet the implementation requirements, the SDT believes that the existing plan is judicious in its time frame relative to the maximum intervals required by the standard.		
Tacoma Power		1. This is a follow-up question/comment from the previous round of balloting; please see the part in all capitals. It is still unclear whether Section 15.3 permits periodically verifying DC voltage at the actuating device trip terminals as an

Organization	Yes or No	Question 3 Comment
		acceptable method of accomplishing the maintenance activity identified in Table 1-5 for unmonitored control circuitry associated with protective functions IF DC VOLTAGE IS VERIFIED AT EACH APPLICABLE SET OF ACTUATING DEVICE TRIP TERMINALS SO THAT EVERY TRIP PATH IS ADDRESSED. It is recommended that this approach be considered acceptable, provided that auxiliary relays are operated within the maximum maintenance interval. 2. In Table 1-2, does the 'channel' include the communication interface/driver that is part of the end device?
Response: Thank you for your comments. 1. The method chosen for verification is left to the entity. The second to last paragraph of Section 15.3 of the Supplementary Reference and FAQ document states: "Monitoring of the control circuit integrity allows for no maintenance activity on the control circuit (excluding the requirement to operate trip coils and electromechanical lockout and/or tripping auxiliary relays). Monitoring of integrity means to monitor for continuity and/or presence of voltage on each trip path. For Ethernet or fiber-optic control Systems, monitoring of integrity means to monitor communication ability between the relay and the circuit breaker." If your suggested activity verifies each and every individual path to the trip coil, it may be an effective method of addressing this requirement; simply checking for voltage at the trip coil may not verify all individual paths. 2. Please see Section 15.5.1 of the Supplementary Reference and FAQ document. The maintenance activities in Table 1-2 related to "channel" have been revised to "communications systems"		
BAE Batteries USA		This revision is a major improvement over the previous draft. Hopefully, the comments above are seen in the light of ensuring basic accuracy of the revised statements. They are not intended to materially change the intent of the position agreed upon at the last drafting team meeting.
Response: Thank you for your comments.		
HHWP		VSL should not be a function of "specific Protection System Component Type". VSL should look at percentage of TOTAL Protection System Components that were not tested within scheduled test date. Consider the entity with 400 Protection System Components, including 2 station battery systems. If that entity completed 399 of 400 tests within schedule and missed 1 battery test, the VSL would be high or severe.

Organization	Yes or No	Question 3 Comment
		Alternatively, if the entity completed 399 of 400 tests, but the missed test was one of 200 protective relays, the VSL would be low. There is no assurance though that the missed battery test resulted in higher risk for the BES than the missed protective relay test. As a result the relationship between VSL and the degree of violation severity lacks predictability.
Response: Thank you for your comments. The SDT disagrees because a battery supplies control power to numerous protective schemes, failure to ensure that the battery is fit for duty is more egregious than missing one component of numerous schemes.		
Consumers Energy		1. We agree with the purpose in section 3 of the Standard. However, section 4.2.1 expands the scope from "affecting the reliability of the Bulk Electric System" to "detecting Faults on BES Elements". In our opinion, the Applicability should be limited to the stated Purpose. Expanding the scope as is done in 4.2.1 greatly increases the number of Protection Systems covered without an increase in reliability of the BES. We prefer the applicability as expressed in Appendix 1 of PRC-005-1b. 2. We suggest changing "Component Type" in R1.2 to something similar to "Segment" as defined within the Standard. A "Component Type" limits to one of five categories, whereas a "Segment" must share similar attributes. 3. In item 2 of the second section of Attachment A, it is only necessary to use 5%, as 5% of a Segment (minimum of 60) is always 3 or more.
Response: Thank you for your comments. 1. The SDT believes the Applicability as stated in PRC-005-2 is correct and supports the reliability of the BES. The SDT observes that the approved interpretation addresses the term, “transmission Protection System”, and notes that this term is not used within PRC-005-2; thus the interpretation does not apply to PRC-005-2. PRC-005-2 specifically addresses “Protection Systems that are installed for the purpose of detecting faults on BES Elements.” Please see Section 2.3 of the Supplementary Reference and FAQ document for additional discussion. 2. In the documentation to support Requirement R1.2, an entity can list different technologies within a Component Type along with their respective monitoring attributes. The SDT sees no appreciable improvement in the standard with your proposed change and respectfully declines to modify the standard.		

Organization	Yes or No	Question 3 Comment
3. The SDT agrees with your observation but sees no appreciable improvement in the standard with your proposed change and respectfully declines to modify the standard.		
Alliant Energy		We appreciate the work done by the SDT and believe it is an excellent product.
Response: Thank you for your comments.		
Georgia Transmission Corporation		We cast our ballot as an affirmative vote and agree with the nature of the standard. We raise concerns on the measures that are very prescriptive on documentation. We prefer a standard based on the program and measures that track the application and performance of the groups program. Maintaining the documentation for individual elements becomes a group's prime directive along with maintaining the equipment; this develops a process more controlled by documentation than results. This also adds a level of complexity for data retention, the drafting team tried to resolve by reducing the load of data. We contend the retention levels to be extreme considering some of the 12 calendar year cycles, interpret the data for compliance to be 24 years. One cannot remove previous documents until new maintenance performed 12 years after the current recorded date. We recommend reducing the data retention to list or check sheets and not the extreme of each individual component. Another important factor in managing the data is the capability of retrieval after 12 or 24 years. Some systems and formats are not available for 12 or 24 years and add a burden on companies to maintain legacy systems or convert massive amounts of data.
Response: Thank you for your comments. To be assured of compliance, the SDT believes the Compliance Monitor will need the data for the most recent performance of the maintenance, as well as the data for the preceding maintenance period. This seems to be consistent with what auditors are expecting (per the SDT's experience), and is also consistent with Compliance Process Bulletins 2011-001 and 2009-05. This seems to be consistent with what auditors are expecting (per the SDT's experience), and is also consistent with Compliance Process Bulletins 2011-001 and 2009-05. The SDT has specified the data retention in the posted standard to establish this level of documentation. The entity is urged to assure that data is retained as specified within the standard.		
Nebraska Public Power District		1. We recommend removing requirement 5. This is adding the requirement for a

Organization	Yes or No	Question 3 Comment
		corrective action program to the standard. Performance metrics should be utilized to measure if a registered entity is correcting maintenance deficiencies in a timely manner. Examples of performance metrics include: o A Countable event has already been defined in the definition of terms, which would cover the need to replace equipment. o The quantity and causes of Misoperations are a direct correlation to good or poor maintenance practices and corrective actions by a utility. o TADS records events which are initiated by failed protection system equipment and would identify utilities with poor corrective action processes. 2. Can you show us a study or references justifying why records need to be kept for longer than the end of the current audit period. We are concerned that the complexities and costs of tracking and maintaining records, along with the corresponding maintenance program and PRC-005 revision that old tests would fall under will be an undue cost to small utilities. We suggest requiring entities to retain the last maintenance record or any records created during the current audit period. 3. The comment from the previous consideration of comments, "The SDT believes that Protection Systems that trip (or can trip) the BES should be included" seems to include any device that can affect the BES. This sets a precedence to include any device that can trigger trip coils into the maintenance system. These devices are meant to protect equipment and not the BES. 4. Based on the IEEE device numbers, please indicate which devices are part of the BES protection system and should be included in a maintenance program. 5. Why do functional trip checks need to be done on any interval if checks are done upon commissioning, maintenance and modification? We suggest eliminating any interval and making the requirement to check upon commissioning, maintenance and modification. 6. Comments on SAR for 2007-17 Very few reclosing relays protect the BES. Most reclosing relays actually would have a negative impact on the reliability of the bulk electric system. It is imperative that the SDT clearly define what types of reclosing relays are referred to here, and if it pertains to ANY reclosing relay that

Organization	Yes or No	Question 3 Comment
		can affect the BES. 7. There is a difference between components designed to protect the BES and components which can affect the BES. 8. For R5 if the maintenance interval is 6 years does the maintenance issue become an "unresolved" item immediately or does the next maintenance interval 6 years later need to be reached before it takes on an unresolved status to be auditable under R5? 9. Comments: Suggest for monitored microprocessor relays in Table 1-1 and 3 to change wording to verify "settings are as specified that are essential to the proper functioning of the protection system". Many settings are not essential. 10. A key concern is will the reliability of the bulk electric system be affected negatively due to increased risk from human element initiated events as a result of the more frequent functional trip checks that will be required. I suggest there be consideration that the interval for functional tests be moved to the minimum frequency of 12 years to minimize this unknown but present risk.

Response: Thank you for your comments.

1. The SDT disagrees:
   NERC has demonstrated its belief that returning Protection System devices to good working order exists currently as a required element of a sound maintenance program subject to the existing Protection System maintenance and testing standard, PRC-005-1. For reference, NERC Compliance Application Notice CAN-0043 (Posted Final 12/30/2011) directs Compliance Enforcement Authorities (CEAs) to "…look for relay test results or field records with annotations such as "as-found" readings or pass/fail results; if failed, then adjustments made. The maintenance record for adjustments may be requested".
   Management of completion of the identified unresolved maintenance issue is a complex topic that falls outside of the scope of this standard. There can be any number of supply, process and management problems that make setting repair deadlines impossible. The SDT specifically chose the phrase "demonstrate efforts to correct" (with guidance from NERC Staff) because of the concern that many more complex unresolved maintenance issues might require greater than the remaining maintenance interval to resolve (and yet still be a "closed-end process"). For example, a problem might be identified on a VRLA battery during a 6 month check. In instances such as one that requires battery replacement as part of the long term resolution, it is highly unlikely that the battery could be replaced in time to meet the 6 calendar month requirement for this maintenance activity. The SDT does believe corrective actions should be timely but concludes it would be impossible to postulate all possible

Organization	Yes or No	Question 3 Comment
		remediation projects and therefore impossible to specify bounding time frames for resolution of all possible unresolved maintenance issues, or what documentation might be sufficient to provide proof that effective corrective actions are being undertaken. 2. To be assured of compliance, the SDT believes the Compliance Monitor will need the data for the most recent performance of the maintenance, as well as the data for the preceding maintenance period. This seems to be consistent with what auditors are expecting (per the SDT's experience), and is also consistent with Compliance Process Bulletins 2011-001 and 2009-05. This seems to be consistent with what auditors are expecting (per the SDT's experience), and is also consistent with Compliance Process Bulletins 2011-001 and 2009-05. The SDT has specified the data retention in the posted standard to establish this level of documentation. The entity is urged to assure that data is retained as specified within the standard. 3. The response cited from a previous consideration of comments was specifically related to sudden pressure relays. The Applicability 4.2.1 of the standard, specifically states, "…installed for the purpose of detecting Faults on BES Elements". 4. It is left to the entity to determine which devices and their complementary IEEE device numbers are installed for the purpose of detecting Faults on BES Elements. 5. The standard does not specify "functional trip tests", but instead requires that various elements of the dc control circuit be verified at various intervals. Also, FERC Order 693 directs NERC to establish maximum allowable maintenance intervals for Protection System components. Please see Section 15.3 of the Supplementary Reference and FAQ Document. 6. Reclosing relays are not covered in PRC-005-2. In Order 758, FERC directed NERC to include reclosing relays in a future version of PRC-005; the SDT developed the draft SAR to address FERC's directive 7. The SDT agrees; the standard explicitly covers "Protection Systems that are installed for the purpose of detecting Faults on BES elements (lines, buses, transformers, etc.)". 8. The item does not become an "Unresolved Maintenance Issue" unless it is not corrected before the current maintenance interval expires. 9. The SDT sees no appreciable improvement in the standard with your proposed change and respectfully declines to modify the standard. 10. The SDT believes that performing these maintenance activities at the specified intervals will benefit the reliability of the BES. The standard does not specify "functional trip tests", but instead requires that various elements of the dc control circuit be verified at various intervals.
Western Area Power Administration		Western Area Power Administration is appreciative of the hard work done by the SDT and NERC. 1. We respectfully submit our professional opinion that the increased relay testing

Organization	Yes or No	Question 3 Comment
		required by the PRC-005-2 will result in a net degradation to the reliability of the BES due to human hands disturbing working systems. 2. We propose that auxiliary relays be tested at commissioning and anytime the circuits are rewired or redesigned. If there is evidence that the relay has functioned properly in its current configuration then the best practice for insuring reliability is to leave it alone. 3. The maintenance interval of 6 years for lock-out relay testing is not consistent with 12 year interval of auxiliary relay testing or control circuit testing. No justification is provided for this increased testing interval of lock-out relays versus other electro-mechanical devices. These inconsistent testing intervals, within the same protection control schemes and protective devices, will complicate the industry's Protection System Maintenance Program and cause an increase in maintenance costs. 4. Condition Based Monitoring or Performance Based Monitoring are not allowed on trip coil circuits or lock-out relays. This is inconsistent with current or future technology. Deviation from the 6 year testing interval should be allowed, using CBM or PBM. The Standard should not present a barrier to technology advancements or industry initiatives. The continuous, frequent testing of these devices is detrimental to system reliability. 5. Disagree with testing of the dc control portion of the sudden pressure device as defined by the FAQ. We feel that this device and its wiring were deemed out of scope previously.
Response: Thank you for your comments. 1. The SDT believes that performing these maintenance activities at the specified intervals will benefit the reliability of the BES. 2. The SDT believes that performing these maintenance activities at the specified intervals will benefit the reliability of the BES. Also, FERC Order 693 directs NERC to establish maximum allowable maintenance intervals for Protection System components. 3. The SDT believes that electromechanical lockout relays need periodic operation to remain reliable. As such, these devices are required to be exercised at the same 6 year interval required for electromechanical relays. Performance based maintenance is an option if you want to extend the intervals beyond 6 years. 4. Performance-based maintenance per Attachment A of the standard may be applied to both trip coil circuits and lockout relays.		

Organization	Yes or No	Question 3 Comment
5. The trip path from a sudden pressure device is a part of the Protection System control circuitry. The sensing element is omitted from the definition of Protection System because the SDT is unaware of industry recognized testing protocol for the sensing elements. This position is consistent with the currently-approved PRC-005-1 and the SAR for Project 2007-17.		
Southwest Power Pool NERC Reliability Standards Development Team		N/A
Idaho Power Company		No additional comments.
Kansas City Power & Light		No other comments.

END OF REPORT

Standard Development Roadmap

This section is maintained by the drafting team during the development of the standard and will be removed when the standard becomes effective.

Development Steps Completed:

1. Standards Committee approved posting SAR and draft standard on August 11, 2011.
2. SAR and draft standard were posted for a 45-day concurrent posting and initial ballot from August 15, 2011 through September 29, 2011.
3. Standard passed the initial ballot with the following results: Quorum - 84.32% and Affirmative - 73.93%.
4. Draft standard was posted for a 30-day concurrent posting and successive ballot from February 28, 2012 through March 28, 2012.
5. Standard passed the successive ballot with the following results: Quorum – 84.32% and Affirmative – 73.93%.
6. Draft standard was posted for a 30-day concurrent posting and successive ballot from May 29, 2012 through June 27, 2012.
7. Standard passed the successive ballot with the following results: Quorum – 79.46% and Affirmative – 79.00%.

Description of Current Draft:
This is the second draft of the Standard. This standard merges previous standards PRC-005-1b, PRC-008-0, PRC-011-0, and PRC-017-0. It also addresses FERC comments from Order 693, and addresses observations from the NERC System Protection and Control Task Force, as presented in *NERC SPCTF Assessment of Standards: PRC-005-1 — Transmission and Generation Protection System Maintenance and Testing, PRC-008-0 — Underfrequency Load Shedding Equipment Maintenance Programs, PRC-011-0 — UVLS System Maintenance and Testing, PRC-017-0 — Special Protection System Maintenance and Testing.*

Future Development Plan:

Anticipated Actions	Anticipated Date
1. Post for combined 30-day comment and successive ballot.	July 2012
2. Drafting Team Responds to Comments	September 2012
3. Conduct recirculation ballot	October 2012
4. BOT Adoption	December 2012

Definitions of Terms Used in Standard

This section includes all newly defined or revised terms used in the proposed standard. Terms already defined in the Reliability Standards Glossary of Terms are not repeated here. New or revised definitions listed below become approved when the proposed standard is approved. When the standard becomes effective, these defined terms will be removed from the individual standard and added to the Glossary.

Protection System Maintenance Program (PSMP) — An ongoing program by which Protection System components are kept in working order and proper operation of malfunctioning components is restored. A maintenance program for a specific component includes one or more of the following activities:

- Verify — Determine that the component is functioning correctly.
- Monitor — Observe the routine in-service operation of the component.
- Test — Apply signals to a component to observe functional performance or output behavior, or to diagnose problems.
- Inspect — Examine for signs of component failure, reduced performance or degradation.
- Calibrate — Adjust the operating threshold or measurement accuracy of a measuring element to meet the intended performance requirement.

Protection System (NERC Board of Trustees Approved Definition)

- Protective relays which respond to electrical quantities,
- Communications systems necessary for correct operation of protective functions,
- Voltage and current sensing devices providing inputs to protective relays,
- Station dc supply associated with protective functions (including station batteries, battery chargers, and non-battery-based dc supply), and
- Control circuitry associated with protective functions through the trip coil(s) of the circuit breakers or other interrupting devices.

The following terms are defined for use only within PRC-005-2, and should remain with the standard upon approval rather than being moved to the Glossary of Terms.

Unresolved Maintenance Issue – A deficiency identified during a maintenance activity that causes the component to not meet the intended performance, cannot be corrected during the maintenance interval, and requires follow-up corrective action.

Segment – Protection Systems or components of a consistent design standard, or a particular model or type from a single manufacturer that typically share other common elements. Consistent performance is expected across the entire population of a Segment. A Segment must contain at least sixty (60) individual components.

Component Type - Any one of the five specific elements of the Protection System definition.

Component – A Component is any individual discrete piece of equipment included in a Protection System, including but not limited to a protective relay or current sensing device. The designation of what constitutes a control circuit Component is dependent upon how an entity performs and tracks the testing of the control circuitry. Some entities test their control circuits on a breaker basis whereas others test their circuitry on a local zone of protection basis. Thus, entities are allowed the latitude to designate their own definitions of control circuit Components. Another example of where the entity has some discretion

on determining what constitutes a single Component is the voltage and current sensing devices, where the entity may choose either to designate a full three-phase set of such devices or a single device as a single Component.

Countable Event – A failure of a Component requiring repair or replacement, any condition discovered during the maintenance activities in Tables 1-1 through 1-5 and Table 3 which requires corrective action or a Misoperation attributed to hardware failure or calibration failure. Misoperations due to product design errors, software errors, relay settings different from specified settings, Protection System Component configuration errors, or Protection System application errors are not included in Countable Events.

A. Introduction

1. Title: **Protection System Maintenance**

2. Number: PRC-005-2

3. Purpose: To document and implement programs for the maintenance of all Protection Systems affecting the reliability of the Bulk Electric System (BES) so that these Protection Systems are kept in working order.

4. Applicability:

4.1. Functional Entities:

4.1.1 Transmission Owner

4.1.2 Generator Owner

4.1.3 Distribution Provider

4.2. Facilities:

4.2.1 Protection Systems that are installed for the purpose of detecting Faults on BES Elements (lines, buses, transformers, etc.)

4.2.2 Protection Systems used for underfrequency load-shedding systems installed per ERO underfrequency load-shedding requirements.

4.2.3 Protection Systems used for undervoltage load-shedding systems installed to prevent system voltage collapse or voltage instability for BES reliability.

4.2.4 Protection Systems installed as a Special Protection System (SPS) for BES reliability.

4.2.5 Protection Systems for generator Facilities that are part of the BES, including:

4.2.5.1 Protection Systems that act to trip the generator either directly or via lockout or auxiliary tripping relays.

4.2.5.2 Protection Systems for generator step-up transformers for generators that are part of the BES.

4.2.5.3 Protection Systems for transformers connecting aggregated generation, where the aggregated generation is part of the BES (e.g., transformers connecting facilities such as wind-farms to the BES).

4.2.5.4 Protection Systems for station service or excitation transformers connected to the generator bus of generators which are part of the BES, that act to trip the generator either directly or via lockout or tripping auxiliary relays.

5. Effective Date: See Implementation Plan

B. Requirements

R1. Each Transmission Owner, Generator Owner, and Distribution Provider shall establish a Protection System Maintenance Program (PSMP) for its Protection Systems identified in Section 4.2. *[Violation Risk Factor: Medium] [Time Horizon: Operations Planning]*

The PSMP shall:

1.1. Identify which maintenance method (time-based, performance-based per PRC-005 Attachment A, or a combination) is used to address each Protection System Component Type. All batteries associated with the station dc supply Component Type of a Protection System shall be included in a time-based program as described in Table 1-4 and Table 3.

> ***Component Type*** *- Any one of the five specific elements of the Protection System definition.*

1.2. Include the applicable monitored Component attributes applied to each Protection System Component Type consistent with the maintenance intervals specified in Tables 1-1 through 1-5, Table 2, and Table 3 where monitoring is used to extend the maintenance intervals beyond those specified for unmonitored Protection System Components.

> **Component** – *A component is any individual discrete piece of equipment included in a Protection System, including but not limited to a protective relay or current sensing device. The designation of what constitutes a control circuit component is very dependent upon how an entity performs and tracks the testing of the control circuitry. Some entities test their control circuits on a breaker basis whereas others test their circuitry on a local zone of protection basis. Thus, entities are allowed the latitude to designate their own definitions of control circuit components. Another example of where the entity has some discretion on determining what constitutes a single component is the voltage and current sensing devices, where the entity may choose either to designate a full three-phase set of such devices or a single device as a single component.*

R2. Each Transmission Owner, Generator Owner, and Distribution Provider that uses performance-based maintenance intervals in its PSMP shall follow the procedure established in PRC-005 Attachment A to establish and maintain its performance-based intervals. *[Violation Risk Factor: Medium] [Time Horizon: Operations Planning]*

R3. Each Transmission Owner, Generator Owner, and Distribution Provider that utilizes time-based maintenance program(s) shall maintain its Protection System Components that are included within the time-based maintenance program in accordance with the minimum maintenance activities and maximum maintenance intervals prescribed within Tables 1-1 through 1-5, Table 2, and Table 3. *[Violation Risk Factor: High] [Time Horizon: Operations Planning]*

R4. Each Transmission Owner, Generator Owner, and Distribution Provider that utilizes performance-based maintenance program(s) in accordance with Requirement R2 shall implement and follow its PSMP for its Protection System Components that are included within the performance-based program(s). *[Violation Risk Factor: High] [Time Horizon: Operations Planning]*

R5. Each Transmission Owner, Generator Owner, and Distribution Provider shall demonstrate efforts to correct identified Unresolved Maintenance Issues. *[Violation Risk Factor: Medium] [Time Horizon: Operations Planning]*

> ***Unresolved Maintenance Issue*** *- A deficiency identified during a maintenance activity that causes the component to not meet the intended performance, cannot be corrected during the maintenance interval, and requires follow-up corrective action.*

C. Measures

M1. Each Transmission Owner, Generator Owner and Distribution Provider shall have a documented Protection System Maintenance Program in accordance with Requirement R1.

For each Protection System Component Type, the documentation shall include the type of maintenance method applied (time-based, performance-based, or a combination of these maintenance methods), and shall include all batteries associated with the station dc supply Component Types in a time-based program as described in Table 1-4 and Table 3. (Part 1.1)

For Component Types that use monitoring to extend the maintenance intervals, the responsible entity(s) shall have evidence for each protection Component Type (such as manufacturer's specifications or engineering drawings) of the appropriate monitored Component attributes as specified in Tables 1-1 through 1-5, Table 2, and Table 3. (Part 1.2)

M2. Each Transmission Owner, Generator Owner, and Distribution Provider that uses performance-based maintenance intervals shall have evidence that its current performance-based maintenance program(s) is in accordance with Requirement R2, which may include but is not limited to Component lists, dated maintenance records, and dated analysis records and results.

M3. Each Transmission Owner, Generator Owner, and Distribution Provider that utilizes time-based maintenance program(s) shall have evidence that it has maintained its Protection System Components included within its time-based program in accordance with Requirement R3. The evidence may include but is not limited to dated maintenance records, dated maintenance summaries, dated check-off lists, dated inspection records, or dated work orders.

M4. Each Transmission Owner, Generator Owner, and Distribution Provider that utilizes performance-based maintenance intervals in accordance with Requirement R2 shall have evidence that it has implemented the Protection System Maintenance Program for the Protection System Components included in its performance-based program in accordance with Requirement R4. The evidence may include but is not limited to dated maintenance records, dated maintenance summaries, dated check-off lists, dated inspection records, or dated work orders.

M5. Each Transmission Owner, Generator Owner, and Distribution Provider shall have evidence that it has undertaken efforts to correct identified Unresolved Maintenance Issues in accordance with Requirement R5. The evidence may include but is not limited to work orders, replacement Component orders, invoices, project schedules with completed milestones, return material authorizations (RMAs) or purchase orders.

D. Compliance

1. Compliance Monitoring Process

1.1. Compliance Enforcement Authority

Regional Entity

1.2. Compliance Monitoring and Enforcement Processes:

Compliance Audit

Self-Certification

Spot Checking

Compliance Investigation

Self-Reporting

Complaint

1.3. Evidence Retention

The following evidence retention periods identify the period of time an entity is required to retain specific evidence to demonstrate compliance. For instances where the evidence retention period specified below is shorter than the time since the last audit, the Compliance Enforcement Authority may ask an entity to provide other evidence to show that it was compliant for the full time period since the last audit.

The Transmission Owner, Generator Owner, and Distribution Provider shall each keep data or evidence to show compliance as identified below unless directed by its Compliance Enforcement Authority to retain specific evidence for a longer period of time as part of an investigation.

For Requirement R1, the Transmission Owner, Generator Owner, and Distribution Provider shall each keep its current dated Protection System Maintenance Program, as well as any superseded versions since the preceding compliance audit, including the documentation that specifies the type of maintenance program applied for each Protection System Component Type.

For Requirement R2, Requirement R3, Requirement R4, and Requirement R5, the Transmission Owner, Generator Owner, and Distribution Provider shall each keep documentation of the two most recent performances of each distinct maintenance activity for the Protection System Component, or all performances of each distinct maintenance activity for the Protection System Component since the previous scheduled audit date, whichever is longer.

The Compliance Enforcement Authority shall keep the last audit records and all requested and submitted subsequent audit records.

1.4. Additional Compliance Information

None.

2. Violation Severity Levels

Requirement Number	Lower VSL	Moderate VSL	High VSL	Severe VSL
R1	The responsible entity's PSMP failed to specify whether one Component Type is being addressed by time-based or performance-based maintenance, or a combination of both. (Part 1.1) OR The responsible entity's PSMP failed to include applicable station batteries in a time-based program. (Part 1.1)	The responsible entity's PSMP failed to specify whether two Component Types are being addressed by time-based or performance-based maintenance, or a combination of both. (Part 1.1)	The responsible entity's PSMP failed to include the applicable monitoring attributes applied to each Protection System Component Type consistent with the maintenance intervals specified in Tables 1-1 through 1-5, Table 2, and Table 3 where monitoring is used to extend the maintenance intervals beyond those specified for unmonitored Protection System Components. (Part 1.2).	The responsible entity failed to establish a PSMP. OR The responsible entity failed to specify whether three or more Component Types are being addressed by time-based or performance-based maintenance, or a combination of both. (Part 1.1).
R2	The responsible entity uses performance-based maintenance intervals in its PSMP but failed to reduce Countable Events to no more than 4% within three years.	NA	The responsible entity uses performance-based maintenance intervals in its PSMP but failed to reduce Countable Events to no more than 4% within four years.	The responsible entity uses performance-based maintenance intervals in its PSMP but: 1) Failed to establish the technical justification described within Requirement R2 for the initial use of the performance-based PSMP OR 2) Failed to reduce Countable Events to no more than 4% within five years OR 3) Maintained a Segment with less than 60 Components OR 4) Failed to: • Annually update the list of Components, OR

Requirement Number	Lower VSL	Moderate VSL	High VSL	Severe VSL
				• Annually perform maintenance on the greater of 5% of the segment population or 3 Components, OR • Annually analyze the program activities and results for each Segment.
R3	For Protection System Components included within a time-based maintenance program, the responsible entity failed to maintain 5% or less of the total Components included within a specific Protection System Component Type, in accordance with the minimum maintenance activities and maximum maintenance intervals prescribed within Tables 1-1 through 1-5, Table 2, and Table 3.	For Protection System Components included within a time-based maintenance program, the responsible entity failed to maintain more than 5% but 10% or less of the total Components included within a specific Protection System Component Type, in accordance with the minimum maintenance activities and maximum maintenance intervals prescribed within Tables 1-1 through 1-5, Table 2, and Table 3.	For Protection System Components included within a time-based maintenance program, the responsible entity failed to maintain more than 10% but 15% or less of the total Components included within a specific Protection System Component Type, in accordance with the minimum maintenance activities and maximum maintenance intervals prescribed within Tables 1-1 through 1-5, Table 2, and Table 3.	For Protection System Components included within a time-based maintenance program, the responsible entity failed to maintain more than 15% of the total Components included within a specific Protection System Component Type, in accordance with the minimum maintenance activities and maximum maintenance intervals prescribed within Tables 1-1 through 1-5, Table 2, and Table 3.
R4	For Protection System Components included within a performance-based maintenance program, the responsible entity failed to maintain 5% or less of the annual scheduled maintenance for a specific Protection System Component Type in accordance with their performance-based PSMP.	For Protection System Components included within a performance-based maintenance program, the responsible entity failed to maintain more than 5% but 10% or less of the annual scheduled maintenance for a specific Protection System Component Type in accordance with their performance-based PSMP.	For Protection System Components included within a performance-based maintenance program, the responsible entity failed to maintain more than 10% but 15% or less of the annual scheduled maintenance for a specific Protection System Component Type in accordance with their performance-based PSMP.	For Protection System Components included within a performance-based maintenance program, the responsible entity failed to maintain more than 15% of the annual scheduled maintenance for a specific Protection System Component Type in accordance with their performance-based PSMP.
R5	The responsible entity failed to undertake efforts to correct 5 or fewer Unresolved Maintenance	The responsible entity failed to undertake efforts to correct greater than 5, but less than or equal to 10	The responsible entity failed to undertake efforts to correct greater than 10, but less than or equal to 15	The responsible entity failed to undertake efforts to correct greater than 15 Unresolved Maintenance

Requirement Number	Lower VSL	Moderate VSL	High VSL	Severe VSL
	Issues.	Unresolved Maintenance Issues.	Unresolved Maintenance Issues.	Issues.

E. Regional Variances

None

F. Supplemental Reference Document

The following documents present a detailed discussion about determination of maintenance intervals and other useful information regarding establishment of a maintenance program.

1. PRC-005-2 Protection System Maintenance Supplementary Reference and FAQ — July 2012.

Version History

Version	Date	Action	Change Tracking
2	TBD	Complete revision, absorbing maintenance requirements from PRC-005-1b, PRC-008-0, PRC-011-0, PRC-017-0	Complete revision

Table 1-1 Component Type - Protective Relay Excluding distributed UFLS and distributed UVLS (see Table 3)		
Component Attributes	**Maximum Maintenance Interval**[1]	**Maintenance Activities**
Any unmonitored protective relay not having all the monitoring attributes of a category below.	6 calendar years	For all unmonitored relays: • Verify that settings are as specified For non-microprocessor relays: • Test and, if necessary calibrate For microprocessor relays: • Verify operation of the relay inputs and outputs that are essential to proper functioning of the Protection System. • Verify acceptable measurement of power system input values.
Monitored microprocessor protective relay with the following: • Internal self-diagnosis and alarming (see Table 2). • Voltage and/or current waveform sampling three or more times per power cycle, and conversion of samples to numeric values for measurement calculations by microprocessor electronics. • Alarming for power supply failure (see Table 2).	12 calendar years	Verify: • Settings are as specified. • Operation of the relay inputs and outputs that are essential to proper functioning of the Protection System. • Acceptable measurement of power system input values.

[1] For the tables in this standard, a calendar year starts on the first day of a new year (January 1) after a maintenance activity has been completed. For the tables in this standard, a calendar month starts on the first day of the first month after a maintenance activity has been completed.

Table 1-1 Component Type - Protective Relay Excluding distributed UFLS and distributed UVLS (see Table 3)		
Component Attributes	**Maximum Maintenance Interval[1]**	**Maintenance Activities**
Monitored microprocessor protective relay with preceding row attributes and the following: • Ac measurements are continuously verified by comparison to an independent ac measurement source, with alarming for excessive error (See Table 2). • Some or all binary or status inputs and control outputs are monitored by a process that continuously demonstrates ability to perform as designed, with alarming for failure (See Table 2). • Alarming for change of settings (See Table 2).	12 calendar years	Verify only the unmonitored relay inputs and outputs that are essential to proper functioning of the Protection System.

Table 1-2 Component Type - Communications Systems Excluding distributed UFLS and distributed UVLS (see Table 3)		
Component Attributes	**Maximum Maintenance Interval**	**Maintenance Activities**
Any unmonitored communications system necessary for correct operation of protective functions, and not having all the monitoring attributes of a category below.	4 calendar months	Verify that the communications system is functional.
	6 calendar years	Verify that the communication system meets performance criteria pertinent to the communications technology applied (e.g. signal level, reflected power, or data error rate). Verify operation of communication system inputs and outputs that are essential to proper functioning of the Protection System.
Any communications system with continuous monitoring or periodic automated testing for the presence of the channel function, and alarming for loss of function (See Table 2).	12 calendar years	Verify that the communications system meets performance criteria pertinent to the communications technology applied (e.g. signal level, reflected power, or data error rate). Verify operation of communication system inputs and outputs that are essential to proper functioning of the Protection System.
Any communications system with all of the following: • Continuous monitoring or periodic automated testing for the performance of the channel using criteria pertinent to the communications technology applied (e.g. signal level, reflected power, or data error rate, and alarming for excessive performance degradation). (See Table 2) • Some or all binary or status inputs and control outputs are monitored by a process that continuously demonstrates ability to perform as designed, with alarming for failure (See Table 2).	12 calendar years	Verify only the unmonitored communications system inputs and outputs that are essential to proper functioning of the Protection System

Table 1-3 Component Type - Voltage and Current Sensing Devices Providing Inputs to Protective Relays Excluding distributed UFLS and distributed UVLS (see Table 3)		
Component Attributes	**Maximum Maintenance Interval**	**Maintenance Activities**
Any voltage and current sensing devices not having monitoring attributes of the category below.	12 calendar years	Verify that current and voltage signal values are provided to the protective relays.
Voltage and Current Sensing devices connected to microprocessor relays with AC measurements are continuously verified by comparison of sensing input value, as measured by the microprocessor relay, to an independent ac measurement source, with alarming for unacceptable error or failure (see Table 2).	No periodic maintenance specified	None.

Table 1-4(a) Component Type – Protection System Station dc Supply Using Vented Lead-Acid (VLA) Batteries Excluding distributed UFLS and distributed UVLS (see Table 3) Protection System Station dc supply used only for non-BES interrupting devices for SPS, non-distributed UFLS systems, or non-distributed UVLS systems is excluded (see Table 1-4(e)).		
Component Attributes	**Maximum Maintenance Interval**	**Maintenance Activities**
Protection System Station dc supply using **Vented Lead-Acid (VLA) batteries** not having monitoring attributes of Table 1-4(f).	4 Calendar Months	Verify: • Station dc supply voltage Inspect: • Electrolyte level • For unintentional grounds
	18 Calendar Months	Verify: • Float voltage of battery charger • Battery continuity • Battery terminal connection resistance • Battery intercell or unit-to-unit connection resistance Inspect: • Cell condition of all individual battery cells where cells are visible – or measure battery cell/unit internal ohmic values where the cells are not visible • Physical condition of battery rack

Table 1-4(a) Component Type – Protection System Station dc Supply Using Vented Lead-Acid (VLA) Batteries Excluding distributed UFLS and distributed UVLS (see Table 3) Protection System Station dc supply used only for non-BES interrupting devices for SPS, non-distributed UFLS systems, or non-distributed UVLS systems is excluded (see Table 1-4(e)).		
Component Attributes	**Maximum Maintenance Interval**	**Maintenance Activities**
	18 Calendar Months -or- 6 Calendar Years	Verify that the station battery can perform as manufactured by evaluating cell/unit measurements indicative of battery performance (e.g. internal ohmic values or float current) against the station battery baseline. -or- Verify that the station battery can perform as manufactured by conducting a performance or modified performance capacity test of the entire battery bank.

Table 1-4(b) Component Type – Protection System Station dc Supply Using Valve-Regulated Lead-Acid (VRLA) Batteries Excluding distributed UFLS and distributed UVLS (see Table 3) Protection System Station dc supply used only for non-BES interrupting devices for SPS, non-distributed UFLS systems, or non-distributed UVLS systems is excluded (see Table 1-4(e)).		
Component Attributes	**Maximum Maintenance Interval**	**Maintenance Activities**
Protection System Station dc supply **with Valve Regulated Lead-Acid (VRLA) batteries** not having monitoring attributes of Table 1-4(f).	4 Calendar Months	Verify: • Station dc supply voltage Inspect: • For unintentional grounds
	6 Calendar Months	Inspect: • Condition of all individual units by measuring battery cell/unit internal ohmic values.
	18 Calendar Months	Verify: • Float voltage of battery charger • Battery continuity • Battery terminal connection resistance • Battery intercell or unit-to-unit connection resistance Inspect: • Physical condition of battery rack

Table 1-4(b) Component Type – Protection System Station dc Supply Using Valve-Regulated Lead-Acid (VRLA) Batteries Excluding distributed UFLS and distributed UVLS (see Table 3) Protection System Station dc supply used only for non-BES interrupting devices for SPS, non-distributed UFLS systems, or non-distributed UVLS systems is excluded (see Table 1-4(e)).		
Component Attributes	**Maximum Maintenance Interval**	**Maintenance Activities**
	6 Calendar Months -or- 3 Calendar Years	Verify that the station battery can perform as manufactured by evaluating cell/unit measurements indicative of battery performance (e.g. internal ohmic values or float current) against the station battery baseline. -or- Verify that the station battery can perform as manufactured by conducting a performance or modified performance capacity test of the entire battery bank.

Table 1-4(c) Component Type – Protection System Station dc Supply Using Nickel-Cadmium (NiCad) Batteries Excluding distributed UFLS and distributed UVLS (see Table 3) Protection System Station dc supply used only for non-BES interrupting devices for SPS, non-distributed UFLS system, or non-distributed UVLS systems is excluded (see Table 1-4(e)).		
Component Attributes	**Maximum Maintenance Interval**	**Maintenance Activities**
Protection System Station dc supply **Nickel-Cadmium (NiCad) batteries** not having monitoring attributes of Table 1-4(f).	4 Calendar Months	Verify: • Station dc supply voltage Inspect: • Electrolyte level • For unintentional grounds
	18 Calendar Months	Verify: • Float voltage of battery charger • Battery continuity • Battery terminal connection resistance • Battery intercell or unit-to-unit connection resistance Inspect: • Cell condition of all individual battery cells. • Physical condition of battery rack
	6 Calendar Years	Verify that the station battery can perform as manufactured by conducting a performance or modified performance capacity test of the entire battery bank.

Table 1-4(d) Component Type – Protection System Station dc Supply Using Non Battery Based Energy Storage Excluding distributed UFLS and distributed UVLS (see Table 3) Protection System Station dc supply used only for non-BES interrupting devices for SPS, non-distributed UFLS system, or non-distributed UVLS systems is excluded (see Table 1-4(e)).		
Component Attributes	**Maximum Maintenance Interval**	**Maintenance Activities**
Any Protection System station dc supply not using a battery and not having monitoring attributes of Table 1-4(f).	4 Calendar Months	Verify: • Station dc supply voltage Inspect: • For unintentional grounds
	18 Calendar Months	Inspect: Condition of non-battery based dc supply
	6 Calendar Years	Verify that the dc supply can perform as manufactured when ac power is not present.

Table 1-4(e) Component Type – Protection System Station dc Supply for non-BES Interrupting Devices for SPS, non-distributed UFLS, and non-distributed UVLS systems		
Component Attributes	**Maximum Maintenance Interval**	**Maintenance Activities**
Any Protection System dc supply used for tripping only non-BES interrupting devices as part of a SPS, non-distributed UFLS, or non-distributed UVLS system and not having monitoring attributes of Table 1-4(f).	When control circuits are verified (See Table 1-5)	Verify Station dc supply voltage.

Table 1-4(f) Exclusions for Protection System Station dc Supply Monitoring Devices and Systems		
Component Attributes	**Maximum Maintenance Interval**	**Maintenance Activities**
Any station dc supply with high and low voltage monitoring and alarming of the battery charger voltage to detect charger overvoltage and charger failure (See Table 2).	No periodic maintenance specified	No periodic verification of station dc supply voltage is required.
Any battery based station dc supply with electrolyte level monitoring and alarming in every cell (See Table 2).		No periodic inspection of the electrolyte level for each cell is required.
Any station dc supply with unintentional dc ground monitoring and alarming (See Table 2).		No periodic inspection of unintentional dc grounds is required.
Any station dc supply with charger float voltage monitoring and alarming to ensure correct float voltage is being applied on the station dc supply (See Table 2).		No periodic verification of float voltage of battery charger is required.
Any battery based station dc supply with monitoring and alarming of battery string continuity (See Table 2).		No periodic verification of the battery continuity is required.
Any battery based station dc supply with monitoring and alarming of the intercell and/or terminal connection detail resistance of the entire battery (See Table 2).		No periodic verification of the intercell and terminal connection resistance is required.
Any Valve Regulated Lead-Acid (VRLA) or Vented Lead-Acid (VLA) station battery with internal ohmic value or float current monitoring and alarming, and evaluating present values relative to baseline internal ohmic values for every cell/unit (See Table 2).		No periodic evaluation relative to baseline of battery cell/unit measurements indicative of battery performance is required to verify the station battery can perform as manufactured.
Any Valve Regulated Lead-Acid (VRLA) or Vented Lead-Acid (VLA) station battery with monitoring and alarming of each cell/unit internal ohmic value (See Table 2).		No periodic inspection of the condition of all individual units by measuring battery cell/unit internal ohmic values of a station VRLA or Vented Lead-Acid (VLA) battery is required.

Table 1-5 Component Type - Control Circuitry Associated With Protective Functions Excluding distributed UFLS and distributed UVLS (see Table 3) **Note:** Table requirements apply to all Control Circuitry Components of Protection Systems, and SPSs except as noted.		
Component Attributes	**Maximum Maintenance Interval**	**Maintenance Activities**
Trip coils or actuators of circuit breakers, interrupting devices, or mitigating devices (regardless of any monitoring of the control circuitry).	6 calendar years	Verify that each trip coil is able to operate the circuit breaker, interrupting device, or mitigating device.
Electromechanical lockout devices which are directly in a trip path from the protective relay to the interrupting device trip coil (regardless of any monitoring of the control circuitry).	6 calendar years	Verify electrical operation of electromechanical lockout devices.
Unmonitored control circuitry associated with SPS.	12 calendar years	Verify all paths of the control circuits essential for proper operation of the SPS.
Unmonitored control circuitry associated with protective functions inclusive of all auxiliary relays.	12 calendar years	Verify all paths of the trip circuits inclusive of all auxiliary relays through the trip coil(s) of the circuit breakers or other interrupting devices.
Control circuitry associated with protective functions and/or SPS whose integrity is monitored and alarmed (See Table 2).	No periodic maintenance specified	None.

Table 2 – Alarming Paths and Monitoring In Tables 1-1 through 1-5 and Table 3, alarm attributes used to justify extended maximum maintenance intervals and/or reduced maintenance activities are subject to the following maintenance requirements		
Component Attributes	**Maximum Maintenance Interval**	**Maintenance Activities**
Any alarm path through which alarms in Tables 1-1 through 1-5 and Table 3 are conveyed from the alarm origin to the location where corrective action can be initiated, and not having all the attributes of the "Alarm Path with monitoring" category below. Alarms are reported within 24 hours of detection to a location where corrective action can be initiated.	12 Calendar Years	Verify that the alarm path conveys alarm signals to a location where corrective action can be initiated.
Alarm Path with monitoring: The location where corrective action is taken receives an alarm within 24 hours for failure of any portion of the alarming path from the alarm origin to the location where corrective action can be initiated.	No periodic maintenance specified	None.

Table 3 Maintenance Activities and Intervals for distributed UFLS and distributed UVLS Systems		
Component Attributes	**Maximum Maintenance Interval**	**Maintenance Activities**
Any unmonitored protective relay not having all the monitoring attributes of a category below.	6 calendar years	Verify that settings are as specified For non-microprocessor relays: • Test and, if necessary calibrate For microprocessor relays: • Verify operation of the relay inputs and outputs that are essential to proper functioning of the Protection System. • Verify acceptable measurement of power system input values.
Monitored microprocessor protective relay with the following: • Internal self diagnosis and alarming (See Table 2). • Voltage and/or current waveform sampling three or more times per power cycle, and conversion of samples to numeric values for measurement calculations by microprocessor electronics. Alarming for power supply failure (See Table 2).	12 calendar years	Verify: • Settings are as specified. • Operation of the relay inputs and outputs that are essential to proper functioning of the Protection System. • Acceptable measurement of power system input values
Monitored microprocessor protective relay with preceding row attributes and the following: • Ac measurements are continuously verified by comparison to an independent ac measurement source, with alarming for excessive error (See Table 2). • Some or all binary or status inputs and control outputs are monitored by a process that continuously demonstrates ability to perform as designed, with alarming for failure (See Table 2).	12 calendar years	Verify only the unmonitored relay inputs and outputs that are essential to proper functioning of the Protection System.

Table 3 Maintenance Activities and Intervals for distributed UFLS and distributed UVLS Systems		
Component Attributes	**Maximum Maintenance Interval**	**Maintenance Activities**
Alarming for change of settings (See Table 2).		
Voltage and/or current sensing devices associated with UFLS or UVLS systems.	12 calendar years	Verify that current and/or voltage signal values are provided to the protective relays.
Protection System dc supply for tripping non-BES interrupting devices used only for a UFLS or UVLS system.	12 calendar years	Verify Protection System dc supply voltage.
Control circuitry between the UFLS or UVLS relays and electromechanical lockout and/or tripping auxiliary devices (excludes non-BES interrupting device trip coils).	12 calendar years	Verify the path from the relay to the lockout and/or tripping auxiliary relay (including essential supervisory logic).
Electromechanical lockout and/or tripping auxiliary devices associated only with UFLS or UVLS systems (excludes non-BES interrupting device trip coils).	12 calendar years	Verify electrical operation of electromechanical lockout and/or tripping auxiliary devices.
Control circuitry between the electromechanical lockout and/or tripping auxiliary devices and the non-BES interrupting devices in UFLS or UVLS systems, or between UFLS or UVLS relays (with no interposing electromechanical lockout or auxiliary device) and the non-BES interrupting devices (excludes non-BES interrupting device trip coils).	No periodic maintenance specified	None.
Trip coils of non-BES interrupting devices in UFLS or UVLS systems.	No periodic maintenance specified	None.

PRC-005 — Attachment A

Criteria for a Performance-Based Protection System Maintenance Program

Purpose: To establish a technical basis for initial and continued use of a performance-based Protection System Maintenance Program (PSMP).

To establish the technical justification for the initial use of a performance-based PSMP:

1. Develop a list with a description of Components included in each designated Segment of the Protection System Component population, with a minimum **Segment** population of 60 Components.
2. Maintain the Components in each Segment according to the time-based maximum allowable intervals established in Tables 1-1 through 1-5 and Table 3 until results of maintenance activities for the Segment are available for a minimum of 30 individual Components of the Segment.

> **Segment** – *Protection Systems or components of a consistent design standard, or a particular model or type from a single manufacturer that typically share other common elements. Consistent performance is expected across the entire population of a Segment. A Segment must contain at least sixty (60) individual components.*

3. Document the maintenance program activities and results for each Segment, including maintenance dates and Countable Events for each included Component.
4. Analyze the maintenance program activities and results for each Segment to determine the overall performance of the Segment and develop maintenance intervals.
5. Determine the maximum allowable maintenance interval for each Segment such that the Segment experiences **Countable Events** on no more than 4% of the Components within the Segment, for the greater of either the last 30 Components maintained or all Components maintained in the previous year.

> **Countable Event** – *A failure of a component requiring repair or replacement, any condition discovered during the maintenance activities in Tables 1-1 through 1-5 and Table 3 which requires corrective action, or a Misoperation attributed to hardware failure or calibration failure. Misoperations due to product design errors, software errors, relay settings different from specified settings, Protection System component configuration errors, or Protection System application errors are not included in Countable Events.*

To maintain the technical justification for the ongoing use of a performance-based PSMP:

1. At least annually, update the list of Protection System Components and Segments and/or description if any changes occur within the Segment.
2. Perform maintenance on the greater of 5% of the Components (addressed in the performance based PSMP) in each Segment or 3 individual Components within the Segment in each year.
3. For the prior year, analyze the maintenance program activities and results for each Segment to determine the overall performance of the Segment.

4. Using the prior year's data, determine the maximum allowable maintenance interval for each Segment such that the Segment experiences Countable Events on no more than 4% of the Components within the Segment, for the greater of either the last 30 Components maintained or all Components maintained in the previous year.
5. If the Components in a Protection System Segment maintained through a performance-based PSMP experience 4% or more Countable Events, develop, document, and implement an action plan to reduce the Countable Events to less than 4% of the Segment population within 3 years.

Standard Development Roadmap

This section is maintained by the drafting team during the development of the standard and will be removed when the standard becomes effective.

Development Steps Completed:

1. Standards Committee approved posting SAR and draft standard on August 11, 2011.
2. SAR and draft standard were posted for a 45-day concurrent posting and initial ballot from August 15, 2011 through September 29, 2011.
3. Standard passed the initial ballot with the following results: Quorum - 84.32% and Affirmative - 73.93%.
4. Draft standard was posted for a 30-day concurrent posting and successive ballot from February 28, 2012 through March 28, 2012.
5. Standard passed the successive ballot with the following results: Quorum – 84.32% and Affirmative – 73.93%.
6. Draft standard was posted for a 30-day concurrent posting and successive ballot from May 29, 2012 through June 27, 2012.
7. Standard passed the successive ballot with the following results: Quorum – 79.46% and Affirmative – 79.00%.

Description of Current Draft:
This is the second draft of the Standard. This standard merges previous standards PRC-005-1b, PRC-008-0, PRC-011-0, and PRC-017-0. It also addresses FERC comments from Order 693, and addresses observations from the NERC System Protection and Control Task Force, as presented in *NERC SPCTF Assessment of Standards: PRC-005-1 — Transmission and Generation Protection System Maintenance and Testing, PRC-008-0 — Underfrequency Load Shedding Equipment Maintenance Programs, PRC-011-0 — UVLS System Maintenance and Testing, PRC-017-0 — Special Protection System Maintenance and Testing.*

Future Development Plan:

Anticipated Actions	Anticipated Date
1. Post for combined 30-day comment and successive ballot.	May – June,July 2012
2. Drafting Team Responds to Comments	July – August,September 2012
3. Conduct recirculation ballot	AugustOctober, 2012
4. BOT Adoption	December 2012

Definitions of Terms Used in Standard

This section includes all newly defined or revised terms used in the proposed standard. Terms already defined in the Reliability Standards Glossary of Terms are not repeated here. New or revised definitions listed below become approved when the proposed standard is approved. When the standard becomes effective, these defined terms will be removed from the individual standard and added to the Glossary.

Protection System Maintenance Program (PSMP) — An ongoing program by which Protection System components are kept in working order and proper operation of malfunctioning components is restored. A maintenance program for a specific component includes one or more of the following activities:

- Verify — Determine that the component is functioning correctly.
- Monitor — Observe the routine in-service operation of the component.
- Test — Apply signals to a component to observe functional performance or output behavior, or to diagnose problems.
- Inspect — Examine for signs of component failure, reduced performance or degradation.
- Calibrate — Adjust the operating threshold or measurement accuracy of a measuring element to meet the intended performance requirement.

Protection System (NERC Board of Trustees Approved Definition)

- Protective relays which respond to electrical quantities,
- Communications systems necessary for correct operation of protective functions,
- Voltage and current sensing devices providing inputs to protective relays,
- Station dc supply associated with protective functions (including station batteries, battery chargers, and non-battery-based dc supply), and
- Control circuitry associated with protective functions through the trip coil(s) of the circuit breakers or other interrupting devices.

The following terms are defined for use only within PRC-005-2, and should remain with the standard upon approval rather than being moved to the Glossary of Terms.

Unresolved Maintenance Issue – A deficiency identified during a maintenance activity that causes the component to not meet the intended performance, cannot be corrected during the maintenance interval, and requires follow-up corrective action.

Segment – Protection Systems or components of a consistent design standard, or a particular model or type from a single manufacturer that typically share other common elements. Consistent performance is expected across the entire population of a Segment. A Segment must contain at least sixty (60) individual components.

Component Type - Any one of the five specific elements of the Protection System definition.

Component – A Component is any individual discrete piece of equipment included in a Protection System, including but not limited to a protective relay or current sensing device. The designation of what constitutes a control circuit Component is dependent upon how an entity performs and tracks the testing of the control circuitry. Some entities test their control circuits on a breaker basis whereas others test their circuitry on a local zone of protection basis. Thus, entities are allowed the latitude to designate their own definitions of control circuit Components. Another example of where the entity has some discretion

on determining what constitutes a single Component is the voltage and current sensing devices, where the entity may choose either to designate a full three-phase set of such devices or a single device as a single Component.

Countable Event – A failure of a Component requiring repair or replacement, any condition discovered during the maintenance activities in Tables 1-1 through 1-5 and Table 3 which requires corrective action or a Misoperation attributed to hardware failure or calibration failure. Misoperations due to product design errors, software errors, relay settings different from specified settings, Protection System Component configuration errors, or Protection System application errors are not included in Countable Events.

A. Introduction

1. Title: **Protection System Maintenance**

2. Number: PRC-005-2

3. Purpose: To document and implement programs for the maintenance of all Protection Systems affecting the reliability of the Bulk Electric System (BES) so that these Protection Systems are kept in working order.

4. Applicability:

4.1. Functional Entities:

4.1.1 Transmission Owner

4.1.2 Generator Owner

4.1.3 Distribution Provider

4.2. Facilities:

4.2.1 Protection Systems that are installed for the purpose of detecting Faults on BES Elements (lines, buses, transformers, etc.)

4.2.2 Protection Systems used for underfrequency load-shedding systems installed per ERO underfrequency load-shedding requirements.

4.2.3 Protection Systems used for undervoltage load-shedding systems installed to prevent system voltage collapse or voltage instability for BES reliability.

4.2.4 Protection Systems installed as a Special Protection System (SPS) for BES reliability.

4.2.5 Protection Systems for generator Facilities that are part of the BES, including:

4.2.5.1 Protection Systems that act to trip the generator either directly or via lockout or auxiliary tripping relays.

4.2.5.2 Protection Systems for generator step-up transformers for generators that are part of the BES.

4.2.5.3 Protection Systems for transformers connecting aggregated generation, where the aggregated generation is part of the BES (e.g., transformers connecting facilities such as wind-farms to the BES).

4.2.5.4 Protection Systems for station service or excitation transformers connected to the generator bus of generators which are part of the BES, that act to trip the generator either directly or via lockout or tripping auxiliary relays.

5. Effective Date: See Implementation Plan

B. Requirements

R1. Each Transmission Owner, Generator Owner, and Distribution Provider shall establish a Protection System Maintenance Program (PSMP) for its Protection Systems identified in Section 4.2. *[Violation Risk Factor: Medium] [Time Horizon: Operations Planning]*

The PSMP shall:

1.1. Identify which maintenance method (time-based, performance-based per PRC-005 Attachment A, or a combination) is used to address each Protection System Component Type. All batteries associated with the station dc supply Component Type of a Protection System shall be included in a time-based program as described in Table 1-4 and Table 3.

> ***Component Type -*** *Any one of the five specific elements of the Protection System definition.*

1.2. Include the applicable monitored Component attributes applied to each Protection System Component Type consistent with the maintenance intervals specified in Tables 1-1 through 1-5, Table 2, and Table 3 where monitoring is used to extend the maintenance intervals beyond those specified for unmonitored Protection System Components.

> **Component** – *A component is any individual discrete piece of equipment included in a Protection System, including but not limited to a protective relay or current sensing device. The designation of what constitutes a control circuit component is very dependent upon how an entity performs and tracks the testing of the control circuitry. Some entities test their control circuits on a breaker basis whereas others test their circuitry on a local zone of protection basis. Thus, entities are allowed the latitude to designate their own definitions of control circuit components. Another example of where the entity has some discretion on determining what constitutes a single component is the voltage and current sensing devices, where the entity may choose either to designate a full three-phase set of such devices or a single device as a single component.*

R2. Each Transmission Owner, Generator Owner, and Distribution Provider that uses performance-based maintenance intervals in its PSMP shall follow the procedure established in PRC-005 Attachment A to establish and maintain its performance-based intervals. *[Violation Risk Factor: Medium] [Time Horizon: Operations Planning]*

R3. Each Transmission Owner, Generator Owner, and Distribution Provider that utilizes time-based maintenance program(s) shall maintain its Protection System Components that are included within the time-based maintenance program in accordance with the minimum maintenance activities and maximum maintenance intervals prescribed within Tables 1-1 through 1-5, Table 2, and Table 3. *[Violation Risk Factor: High] [Time Horizon: Operations Planning]*

R4. Each Transmission Owner, Generator Owner, and Distribution Provider that utilizes performance-based maintenance program(s) in accordance with Requirement R2 shall implement and follow its PSMP for its Protection System Components that are included within the performance-based program(s). *[Violation Risk Factor: High] [Time Horizon: Operations Planning]*

> ***Unresolved Maintenance Issue -*** *A deficiency identified during a maintenance activity that causes the component to not meet the intended performance, cannot be corrected during the maintenance interval, and requires follow-up corrective action.*

R5. Each Transmission Owner, Generator Owner, and Distribution Provider shall demonstrate efforts to correct identified Unresolved Maintenance Issues. *[Violation Risk Factor: Medium] [Time Horizon: Operations Planning]*

C. Measures

M1. Each Transmission Owner, Generator Owner and Distribution Provider shall have a documented Protection System Maintenance Program in accordance with Requirement R1.

For each Protection System Component Type, the documentation shall include the type of maintenance method applied (time-based, performance-based, or a combination of these maintenance methods), and shall include all batteries associated with the station dc supply Component Types in a time-based program as described in Table 1-4 and Table 3. (Part 1.1)

For Component Types that use monitoring to extend the maintenance intervals, the responsible entity(s) shall have evidence for each protection Component Type (such as manufacturer's specifications or engineering drawings) of the appropriate monitored Component attributes as specified in Tables 1-1 through 1-5, Table 2, and Table 3. (Part 1.2)

M2. Each Transmission Owner, Generator Owner, and Distribution Provider that uses performance-based maintenance intervals shall have evidence that its current performance-based maintenance program(s) is in accordance with Requirement R2, which may include but is not limited to Component lists, dated maintenance records, and dated analysis records and results.

M3. Each Transmission Owner, Generator Owner, and Distribution Provider that utilizes time-based maintenance program(s) shall have evidence that it has maintained its Protection System Components included within its time-based program in accordance with Requirement R3. The evidence may include but is not limited to dated maintenance records, dated maintenance summaries, dated check-off lists, dated inspection records, or dated work orders.

M4. Each Transmission Owner, Generator Owner, and Distribution Provider that utilizes performance-based maintenance intervals in accordance with Requirement R2 shall have evidence that it has implemented the Protection System Maintenance Program for the Protection System Components included in its performance-based program in accordance with Requirement R4. The evidence may include but is not limited to dated maintenance records, dated maintenance summaries, dated check-off lists, dated inspection records, or dated work orders.

M5. Each Transmission Owner, Generator Owner, and Distribution Provider shall have evidence that it has undertaken efforts to correct identified Unresolved Maintenance Issues in accordance with Requirement R5. The evidence may include but is not limited to work orders, replacement Component orders, invoices, project schedules with completed milestones, return material authorizations (RMAs) or purchase orders.

D. Compliance

1. Compliance Monitoring Process

1.1. Compliance Enforcement Authority

Regional Entity

1.2. Compliance Monitoring and Enforcement Processes:

Compliance Audit

Self-Certification

Spot Checking

Compliance Investigation

Self-Reporting

Complaint

1.3. Evidence Retention

The following evidence retention periods identify the period of time an entity is required to retain specific evidence to demonstrate compliance. For instances where the evidence retention period specified below is shorter than the time since the last audit, the Compliance Enforcement Authority may ask an entity to provide other evidence to show that it was compliant for the full time period since the last audit.

The Transmission Owner, Generator Owner, and Distribution Provider shall each keep data or evidence to show compliance as identified below unless directed by its Compliance Enforcement Authority to retain specific evidence for a longer period of time as part of an investigation.

For Requirement R1, the Transmission Owner, Generator Owner, and Distribution Provider shall each keep its current dated Protection System Maintenance Program, as well as any superseded versions since the preceding compliance audit, including the documentation that specifies the type of maintenance program applied for each Protection System Component Type.

For Requirement R2, Requirement R3, Requirement R4, and Requirement R5, the Transmission Owner, Generator Owner, and Distribution Provider shall each keep documentation of the two most recent performances of each distinct maintenance activity for the Protection System Component, or all performances of each distinct maintenance activity for the Protection System Component since the previous scheduled audit date, whichever is longer.

The Compliance Enforcement Authority shall keep the last audit records and all requested and submitted subsequent audit records.

1.4. Additional Compliance Information

None.

2. Violation Severity Levels

Requirement Number	Lower VSL	Moderate VSL	High VSL	Severe VSL
R1	The responsible entity's PSMP failed to specify whether one Component Type is being addressed by time-based or performance-based maintenance, or a combination of both. (Part 1.1) OR The responsible entity's PSMP failed to include applicable station batteries in a time-based program. (Part 1.1)	The responsible entity's PSMP failed to specify whether two Component Types are being addressed by time-based or performance-based maintenance, or a combination of both. (Part 1.1)	The responsible entity's PSMP failed to include the applicable monitoring attributes applied to each Protection System Component Type consistent with the maintenance intervals specified in Tables 1-1 through 1-5, Table 2, and Table 3 where monitoring is used to extend the maintenance intervals beyond those specified for unmonitored Protection System Components. (Part 1.2).	The responsible entity failed to establish a PSMP. OR The responsible entity failed to specify whether three or more Component Types are being addressed by time-based or performance-based maintenance, or a combination of both. (Part 1.1).
R2	The responsible entity uses performance-based maintenance intervals in its PSMP but failed to reduce Countable Events to no more than 4% within three years.	NA	The responsible entity uses performance-based maintenance intervals in its PSMP but failed to reduce Countable Events to no more than 4% within four years.	The responsible entity uses performance-based maintenance intervals in its PSMP but: 1) Failed to establish the technical justification described within Requirement R2 for the initial use of the performance-based PSMP OR 2) Failed to reduce Countable Events to no more than 4% within five years OR 3) Maintained a Segment with less than 60 Components OR 4) Failed to: • Annually update the list of Components, OR

Requirement Number	Lower VSL	Moderate VSL	High VSL	Severe VSL
				• Annually perform maintenance on the greater of 5% of the segment population or 3 Components, OR • Annually analyze the program activities and results for each Segment.
R3	For Protection System Components included within a time-based maintenance program, the responsible entity failed to maintain 5% or less of the total Components included within a specific Protection System Component Type, in accordance with the minimum maintenance activities and maximum maintenance intervals prescribed within Tables 1-1 through 1-5, Table 2, and Table 3.	For Protection System Components included within a time-based maintenance program, the responsible entity failed to maintain more than 5% but 10% or less of the total Components included within a specific Protection System Component Type, in accordance with the minimum maintenance activities and maximum maintenance intervals prescribed within Tables 1-1 through 1-5, Table 2, and Table 3.	For Protection System Components included within a time-based maintenance program, the responsible entity failed to maintain more than 10% but 15% or less of the total Components included within a specific Protection System Component Type, in accordance with the minimum maintenance activities and maximum maintenance intervals prescribed within Tables 1-1 through 1-5, Table 2, and Table 3.	For Protection System Components included within a time-based maintenance program, the responsible entity failed to maintain more than 15% of the total Components included within a specific Protection System Component Type, in accordance with the minimum maintenance activities and maximum maintenance intervals prescribed within Tables 1-1 through 1-5, Table 2, and Table 3.
R4	For Protection System Components included within a performance-based maintenance program, the responsible entity failed to maintain 5% or less of the annual scheduled maintenance for a specific Protection System Component Type in accordance with their performance-based PSMP.	For Protection System Components included within a performance-based maintenance program, the responsible entity failed to maintain more than 5% but 10% or less of the annual scheduled maintenance for a specific Protection System Component Type in accordance with their performance-based PSMP.	For Protection System Components included within a performance-based maintenance program, the responsible entity failed to maintain more than 10% but 15% or less of the annual scheduled maintenance for a specific Protection System Component Type in accordance with their performance-based PSMP.	For Protection System Components included within a performance-based maintenance program, the responsible entity failed to maintain more than 15% of the annual scheduled maintenance for a specific Protection System Component Type in accordance with their performance-based PSMP.
R5	The responsible entity failed to undertake efforts to correct 5 or fewer Unresolved Maintenance	The responsible entity failed to undertake efforts to correct greater than 5, but less than or equal to 10	The responsible entity failed to undertake efforts to correct greater than 10, but less than or equal to 15	The responsible entity failed to undertake efforts to correct greater than 15 Unresolved Maintenance

Requirement Number	Lower VSL	Moderate VSL	High VSL	Severe VSL
	Issues.	Unresolved Maintenance Issues.	Unresolved Maintenance Issues.	Issues.

E. Regional Variances

None

F. Supplemental Reference Document

The following documents present a detailed discussion about determination of maintenance intervals and other useful information regarding establishment of a maintenance program.

1. PRC-005-2 Protection System Maintenance Supplementary Reference and FAQ — ~~May~~ July 2012.

Version History

Version	Date	Action	Change Tracking
2	TBD	Complete revision, absorbing maintenance requirements from ~~PRC-005-1, PRC-005-1a,~~ PRC-005-1b, PRC-008-0, PRC-011-0, PRC-017-0	Complete revision

Table 1-1 Component Type - Protective Relay Excluding distributed UFLS and distributed UVLS (see Table 3)		
Component Attributes	**Maximum Maintenance Interval**[1]	**Maintenance Activities**
Any unmonitored protective relay not having all the monitoring attributes of a category below.	6 calendar years	For all unmonitored relays: • Verify that settings are as specified For non-microprocessor relays: • Test and, if necessary calibrate For microprocessor relays: • Verify operation of the relay inputs and outputs that are essential to proper functioning of the Protection System. • Verify acceptable measurement of power system input values.
Monitored microprocessor protective relay with the following: • Internal self-diagnosis and alarming (see Table 2). • Voltage and/or current waveform sampling three or more times per power cycle, and conversion of samples to numeric values for measurement calculations by microprocessor electronics. • Alarming for power supply failure (see Table 2).	12 calendar years	Verify: • Settings are as specified. • Operation of the relay inputs and outputs that are essential to proper functioning of the Protection System. • Acceptable measurement of power system input values.

[1] For the tables in this standard, a calendar year starts on the first day of a new year (January 1) after a maintenance activity has been completed. For the tables in this standard, a calendar month starts on the first day of the first month after a maintenance activity has been completed.

Table 1-1 Component Type - Protective Relay Excluding distributed UFLS and distributed UVLS (see Table 3)		
Component Attributes	**Maximum Maintenance Interval**[1]	**Maintenance Activities**
Monitored microprocessor protective relay with preceding row attributes and the following: • Ac measurements are continuously verified by comparison to an independent ac measurement source, with alarming for excessive error (See Table 2). • Some or all binary or status inputs and control outputs are monitored by a process that continuously demonstrates ability to perform as designed, with alarming for failure (See Table 2). • Alarming for change of settings (See Table 2).	12 calendar years	Verify only the unmonitored relay inputs and outputs that are essential to proper functioning of the Protection System.

Table 1-2 Component Type - Communications Systems Excluding distributed UFLS and distributed UVLS (see Table 3)		
Component Attributes	**Maximum Maintenance Interval**	**Maintenance Activities**
Any unmonitored communications system necessary for correct operation of protective functions, and not having all the monitoring attributes of a category below.	4 calendar months	Verify that the communications system is functional.
	~~12~~ 6 calendar years	Verify that the ~~channel~~ communication system meets performance criteria pertinent to the communications technology applied (e.g. signal level, reflected power, or data error rate). Verify operation of communication system inputs and outputs that are essential to proper functioning of the Protection System.
Any communications system with continuous monitoring or periodic automated testing for the presence of the channel function, and alarming for loss of function (See Table 2).	12 calendar years	Verify that the ~~channel~~ communications system meets performance criteria pertinent to the communications technology applied (e.g. signal level, reflected power, or data error rate). Verify operation of communication system inputs and outputs that are essential to proper functioning of the Protection System.
Any communications system with all of the following: • Continuous monitoring or periodic automated testing for the performance of the channel using criteria pertinent to the communications technology applied (e.g. signal level, reflected power, or data error rate, and alarming for excessive performance degradation). (See Table 2) • Some or all binary or status inputs and control outputs are monitored by a process that continuously demonstrates ability to perform as designed, with alarming for failure (See Table 2).	12 calendar years	Verify only the unmonitored communications system inputs and outputs that are essential to proper functioning of the Protection System

Table 1-3 Component Type - Voltage and Current Sensing Devices Providing Inputs to Protective Relays Excluding distributed UFLS and distributed UVLS (see Table 3)		
Component Attributes	**Maximum Maintenance Interval**	**Maintenance Activities**
Any voltage and current sensing devices not having monitoring attributes of the category below.	12 calendar years	Verify that current and voltage signal values are provided to the protective relays.
Voltage and Current Sensing devices connected to microprocessor relays with AC measurements are continuously verified by comparison of sensing input value, as measured by the microprocessor relay, to an independent ac measurement source, with alarming for unacceptable error or failure (see Table 2).	No periodic maintenance specified	None.

Table 1-4(a) Component Type – Protection System Station dc Supply Using Vented Lead-Acid (VLA) Batteries Excluding distributed UFLS and distributed UVLS (see Table 3) Protection System Station dc supply used only for non-BES interrupting devices for SPS, non-distributed UFLS systems, or non-distributed UVLS systems is excluded (see Table 1-4(e)).		
Component Attributes	**Maximum Maintenance Interval**	**Maintenance Activities**
Protection System Station dc supply using **Vented Lead-Acid (VLA) batteries** not having monitoring attributes of Table 1-4(f).	4 Calendar Months	Verify: • Station dc supply voltage Inspect: • Electrolyte level • For unintentional grounds
	18 Calendar Months	Verify: • Float voltage of battery charger • Battery continuity • Battery terminal connection resistance • Battery intercell or unit-to-unit connection resistance Inspect: • Cell condition of all individual battery cells where cells are visible – or measure battery cell/unit internal ohmic values where the cells are not visible • Physical condition of battery rack

Table 1-4(a) Component Type – Protection System Station dc Supply Using Vented Lead-Acid (VLA) Batteries Excluding distributed UFLS and distributed UVLS (see Table 3) Protection System Station dc supply used only for non-BES interrupting devices for SPS, non-distributed UFLS systems, or non-distributed UVLS systems is excluded (see Table 1-4(e)).		
Component Attributes	**Maximum Maintenance Interval**	**Maintenance Activities**
	18 Calendar Months -or- 6 Calendar Years	Verify that the station battery can perform as manufactured by evaluating cell/unit measurements indicative of battery performance (e.g. internal ohmic values or float current) against the station battery baseline. -or- Verify that the station battery can perform as manufactured by conducting a performance or modified performance capacity test of the entire battery bank.

Table 1-4(b) Component Type – Protection System Station dc Supply Using Valve-Regulated Lead-Acid (VRLA) Batteries Excluding distributed UFLS and distributed UVLS (see Table 3) Protection System Station dc supply used only for non-BES interrupting devices for SPS, non-distributed UFLS systems, or non-distributed UVLS systems is excluded (see Table 1-4(e)).		
Component Attributes	**Maximum Maintenance Interval**	**Maintenance Activities**
Protection System Station dc supply **with Valve Regulated Lead-Acid (VRLA) batteries** not having monitoring attributes of Table 1-4(f).	4 Calendar Months	Verify: • Station dc supply voltage Inspect: • For unintentional grounds
	6 Calendar Months	Inspect: • Condition of all individual units by measuring battery cell/unit internal ohmic values.
	18 Calendar Months	Verify: • Float voltage of battery charger • Battery continuity • Battery terminal connection resistance • Battery intercell or unit-to-unit connection resistance Inspect: • Physical condition of battery rack

Table 1-4(b) Component Type – Protection System Station dc Supply Using Valve-Regulated Lead-Acid (VRLA) Batteries Excluding distributed UFLS and distributed UVLS (see Table 3) Protection System Station dc supply used only for non-BES interrupting devices for SPS, non-distributed UFLS systems, or non-distributed UVLS systems is excluded (see Table 1-4(e)).		
Component Attributes	**Maximum Maintenance Interval**	**Maintenance Activities**
	6 Calendar Months -or- 3 Calendar Years	Verify that the station battery can perform as manufactured by evaluating cell/unit measurements indicative of battery performance (e.g. internal ohmic values or float current) against the station battery baseline. -or- Verify that the station battery can perform as manufactured by conducting a performance or modified performance capacity test of the entire battery bank.

Table 1-4(c) Component Type – Protection System Station dc Supply Using Nickel-Cadmium (NiCad) Batteries Excluding distributed UFLS and distributed UVLS (see Table 3) Protection System Station dc supply used only for non-BES interrupting devices for SPS, non-distributed UFLS system, or non-distributed UVLS systems is excluded (see Table 1-4(e)).		
Component Attributes	**Maximum Maintenance Interval**	**Maintenance Activities**
Protection System Station dc supply **Nickel-Cadmium (NiCad) batteries** not having monitoring attributes of Table 1-4(f).	4 Calendar Months	Verify: • Station dc supply voltage Inspect: • Electrolyte level • For unintentional grounds
	18 Calendar Months	Verify: • Float voltage of battery charger • Battery continuity • Battery terminal connection resistance • Battery intercell or unit-to-unit connection resistance Inspect: • Cell condition of all individual battery cells. • Physical condition of battery rack
	6 Calendar Years	Verify that the station battery can perform as manufactured by conducting a performance or modified performance capacity test of the entire battery bank.

Table 1-4(d) Component Type – Protection System Station dc Supply Using Non Battery Based Energy Storage Excluding distributed UFLS and distributed UVLS (see Table 3) Protection System Station dc supply used only for non-BES interrupting devices for SPS, non-distributed UFLS system, or non-distributed UVLS systems is excluded (see Table 1-4(e)).		
Component Attributes	**Maximum Maintenance Interval**	**Maintenance Activities**
Any Protection System station dc supply not using a battery and not having monitoring attributes of Table 1-4(f).	4 Calendar Months	Verify: • Station dc supply voltage Inspect: • For unintentional grounds
	18 Calendar Months	Inspect: Condition of non-battery based dc supply
	6 Calendar Years	Verify that the dc supply can perform as manufactured when ac power is not present.

Table 1-4(e) Component Type – Protection System Station dc Supply for non-BES Interrupting Devices for SPS, non-distributed UFLS, and non-distributed UVLS systems		
Component Attributes	**Maximum Maintenance Interval**	**Maintenance Activities**
Any Protection System dc supply used ~~only~~ for tripping only non-BES interrupting devices as part of a SPS, non-distributed UFLS, or non-distributed UVLS system and not having monitoring attributes of Table 1-4(f).	When control circuits are verified (See Table 1-5)	Verify Station dc supply voltage.

Table 1-4(f) Exclusions for Protection System Station dc Supply Monitoring Devices and Systems		
Component Attributes	**Maximum Maintenance Interval**	**Maintenance Activities**
Any station dc supply with high and low voltage monitoring and alarming of the battery charger voltage to detect charger overvoltage and charger failure (See Table 2).	No periodic maintenance specified	No periodic verification of station dc supply voltage is required.
Any battery based station dc supply with electrolyte level monitoring and alarming in every cell (See Table 2).		No periodic inspection of the electrolyte level for each cell is required.
Any station dc supply with unintentional dc ground monitoring and alarming (See Table 2).		No periodic inspection of unintentional dc grounds is required.
Any station dc supply with charger float voltage monitoring and alarming to ensure correct float voltage is being applied on the station dc supply (See Table 2).		No periodic verification of float voltage of battery charger is required.
Any battery based station dc supply with monitoring and alarming of battery string continuity (See Table 2).		No periodic verification of the battery continuity is required.
Any battery based station dc supply with monitoring and alarming of the intercell and/or terminal connection detail resistance of the entire battery (See Table 2).		No periodic verification of the intercell and terminal connection resistance is required.
Any Valve Regulated Lead-Acid (VRLA) or Vented Lead-Acid (VLA) station battery with internal ohmic value or float current monitoring and alarming, and evaluating present values relative to baseline internal ohmic values for every cell/unit (See Table 2).		No periodic evaluation relative to baseline of battery cell/unit measurements indicative of battery performance is required to verify the station battery can perform as manufactured.
Any Valve Regulated Lead-Acid (VRLA) or Vented Lead-Acid (VLA) station battery with monitoring and alarming of each cell/unit internal ohmic value (See Table 2).		No periodic inspection of the condition of all individual units by measuring battery cell/unit internal ohmic values of a station VRLA or Vented Lead-Acid (VLA) battery is required.

Table 1-5 Component Type - Control Circuitry Associated With Protective Functions Excluding distributed UFLS and distributed UVLS (see Table 3) **Note:** Table requirements apply to all Control Circuitry Components of Protection Systems, and SPSs except as noted.		
Component Attributes	**Maximum Maintenance Interval**	**Maintenance Activities**
Trip coils or actuators of circuit breakers, interrupting devices, or mitigating devices (regardless of any monitoring of the control circuitry).	6 calendar years	Verify that each trip coil is able to operate the circuit breaker, interrupting device, or mitigating device.
Electromechanical lockout devices which are directly in a trip path from the protective relay to the interrupting device trip coil (regardless of any monitoring of the control circuitry).	6 calendar years	Verify electrical operation of electromechanical lockout devices.
Unmonitored control circuitry associated with SPS.	12 calendar years	Verify all paths of the control circuits essential for proper operation of the SPS.
Unmonitored control circuitry associated with protective functions inclusive of all auxiliary relays.	12 calendar years	Verify all paths of the trip circuits inclusive of all auxiliary relays through the trip coil(s) of the circuit breakers or other interrupting devices.
Control circuitry associated with protective functions and/or SPS whose integrity is monitored and alarmed (See Table 2).	No periodic maintenance specified	None.

Table 2 – Alarming Paths and Monitoring In Tables 1-1 through 1-5 and Table 3, alarm attributes used to justify extended maximum maintenance intervals and/or reduced maintenance activities are subject to the following maintenance requirements		
Component Attributes	**Maximum Maintenance Interval**	**Maintenance Activities**
Any alarm path through which alarms in Tables 1-1 through 1-5 and Table 3 are conveyed from the alarm origin to the location where corrective action can be initiated, and not having all the attributes of the "Alarm Path with monitoring" category below. Alarms are reported within 24 hours of detection to a location where corrective action can be initiated.	12 Calendar Years	Verify that the alarm path conveys alarm signals to a location where corrective action can be initiated.
Alarm Path with monitoring: The location where corrective action is taken receives an alarm within 24 hours for failure of any portion of the alarming path from the alarm origin to the location where corrective action can be initiated.	No periodic maintenance specified	None.

Table 3 Maintenance Activities and Intervals for distributed UFLS and distributed UVLS Systems		
Component Attributes	**Maximum Maintenance Interval**	**Maintenance Activities**
Any unmonitored protective relay not having all the monitoring attributes of a category below.	6 calendar years	Verify that settings are as specified For non-microprocessor relays: • Test and, if necessary calibrate For microprocessor relays: • Verify operation of the relay inputs and outputs that are essential to proper functioning of the Protection System. • Verify acceptable measurement of power system input values.
Monitored microprocessor protective relay with the following: • Internal self diagnosis and alarming (See Table 2). • Voltage and/or current waveform sampling three or more times per power cycle, and conversion of samples to numeric values for measurement calculations by microprocessor electronics. Alarming for power supply failure (See Table 2).	12 calendar years	Verify: • Settings are as specified. • Operation of the relay inputs and outputs that are essential to proper functioning of the Protection System. • Acceptable measurement of power system input values
Monitored microprocessor protective relay with preceding row attributes and the following: • Ac measurements are continuously verified by comparison to an independent ac measurement source, with alarming for excessive error (See Table 2). • Some or all binary or status inputs and control outputs are monitored by a process that continuously demonstrates ability to perform as designed, with alarming for failure (See Table 2).	12 calendar years	Verify only the unmonitored relay inputs and outputs that are essential to proper functioning of the Protection System.

Table 3 Maintenance Activities and Intervals for distributed UFLS and distributed UVLS Systems		
Component Attributes	**Maximum Maintenance Interval**	**Maintenance Activities**
Alarming for change of settings (See Table 2).		
Voltage and/or current sensing devices associated with UFLS or UVLS systems.	12 calendar years	Verify that current and/or voltage signal values are provided to the protective relays.
Protection System dc supply for tripping non-BES interrupting devices used only for a UFLS or UVLS system.	12 calendar years	Verify Protection System dc supply voltage.
Control circuitry between the UFLS or UVLS relays and electromechanical lockout and/or tripping auxiliary devices (excludes non-BES interrupting device trip coils).	12 calendar years	Verify the path from the relay to the lockout and/or tripping auxiliary relay (including essential supervisory logic).
Electromechanical lockout and/or tripping auxiliary devices associated only with UFLS or UVLS systems (excludes non-BES interrupting device trip coils).	12 calendar years	Verify electrical operation of electromechanical lockout and/or tripping auxiliary devices.
Control circuitry between the electromechanical lockout and/or tripping auxiliary devices and the non-BES interrupting devices in UFLS or UVLS systems, or between UFLS or UVLS relays (with no interposing electromechanical lockout or auxiliary device) and the non-BES interrupting devices (excludes non-BES interrupting device trip coils).	No periodic maintenance specified	None.
Trip coils of non-BES interrupting devices in UFLS or UVLS systems.	No periodic maintenance specified	None.

PRC-005 — Attachment A

Criteria for a Performance-Based Protection System Maintenance Program

Purpose: To establish a technical basis for initial and continued use of a performance-based Protection System Maintenance Program (PSMP).

To establish the technical justification for the initial use of a performance-based PSMP:

1. Develop a list with a description of Components included in each designated Segment of the Protection System Component population, with a minimum **Segment** population of 60 Components.
2. Maintain the Components in each Segment according to the time-based maximum allowable intervals established in Tables 1-1 through 1-5 and Table 3 until results of maintenance activities for the Segment are available for a minimum of 30 individual Components of the Segment.

> **Segment** – *Protection Systems or components of a consistent design standard, or a particular model or type from a single manufacturer that typically share other common elements. Consistent performance is expected across the entire population of a Segment. A Segment must contain at least sixty (60) individual components.*

3. Document the maintenance program activities and results for each Segment, including maintenance dates and Countable Events for each included Component.
4. Analyze the maintenance program activities and results for each Segment to determine the overall performance of the Segment and develop maintenance intervals.
5. Determine the maximum allowable maintenance interval for each Segment such that the Segment experiences **Countable Events** on no more than 4% of the Components within the Segment, for the greater of either the last 30 Components maintained or all Components maintained in the previous year.

> **Countable Event** – *A failure of a component requiring repair or replacement, any condition discovered during the maintenance activities in Tables 1-1 through 1-5 and Table 3 which requires corrective action, or a Misoperation attributed to hardware failure or calibration failure. Misoperations due to product design errors, software errors, relay settings different from specified settings, Protection System component configuration errors, or Protection System application errors are not included in Countable Events.*

To maintain the technical justification for the ongoing use of a performance-based PSMP:

1. At least annually, update the list of Protection System Components and Segments and/or description if any changes occur within the Segment.
2. Perform maintenance on the greater of 5% of the Components (addressed in the performance based PSMP) in each Segment or 3 individual Components within the Segment in each year.
3. For the prior year, analyze the maintenance program activities and results for each Segment to determine the overall performance of the Segment.

4. Using the prior year's data, determine the maximum allowable maintenance interval for each Segment such that the Segment experiences Countable Events on no more than 4% of the Components within the Segment, for the greater of either the last 30 Components maintained or all Components maintained in the previous year.
5. If the Components in a Protection System Segment maintained through a performance-based PSMP experience 4% or more Countable Events, develop, document, and implement an action plan to reduce the Countable Events to less than 4% of the Segment population within 3 years.

NERC
NORTH AMERICAN ELECTRIC
RELIABILITY CORPORATION

Implementation Plan

Project 2007-17 Protection Systems Maintenance and Testing
PRC-005-02

Standards Involved
Approval:

- PRC-005-2 – Protection System Maintenance (PRC-005-2)

Retirements:

- PRC-005-1b – Transmission and Generation Protection System Maintenance and Testing (PRC-005-1b)
- PRC-008-0 – Implementation and Documentation of Underfrequency Load Shedding Equipment Maintenance Program (PRC-008-0)
- PRC-011-0 – Undervoltage Load Shedding System Maintenance and Testing (PRC-011-0)
- PRC-017-0 – Special Protection System Maintenance and Testing (PRC-017-0)

Prerequisite Approvals:
Revised definition of "Protection System."

Background:
The Implementation Plan reflects consideration of the following:

1. The requirements set forth in the proposed standard establish minimum maintenance activities for Protection System component types and the maximum allowable maintenance intervals for these maintenance activities. The maintenance activities established may not be presently performed by some entities and the established maximum allowable intervals may be shorter than those currently in use by some entities.
2. For entities not presently performing a maintenance activity or using longer intervals than the maximum allowable intervals established in the proposed standard, it is unrealistic for those entities to be immediately compliant with the new activities or intervals. Further, entities should be allowed to become compliant in such a way as to facilitate a continuing maintenance program.
3. Entities that have previously been performing maintenance within the newly specified intervals may not have all the documentation needed to demonstrate compliance with all of the maintenance activities specified.

4. The Implementation Schedule set forth in this document requires that entities develop their revised Protection System Maintenance Program within twelve (12) months following applicable regulatory approvals, or in those jurisdictions where no regulatory approval is required, on the first day of the first calendar quarter twenty-four (24) months following NERC Board of Trustees adoption. This anticipates that it will take approximately twelve (12) months to achieve regulatory approvals following adoption by the NERC Board of Trustees.
5. The Implementation Schedule set forth in this document facilitates implementation of the more lengthy maintenance intervals within the revised Protection System Maintenance Program in approximately equally-distributed steps over those intervals prescribed for each respective maintenance activity in order that entities may implement this standard in a systematic method that facilitates an effective ongoing Protection System Maintenance Program.

General Considerations:

Each Transmission Owner, Generator Owner, and Distribution Provider shall maintain documentation to demonstrate compliance with PRC-005-1b, PRC-008-0, PRC-011-0, and PRC-017-0 until that entity meets the requirements of PRC-005-2 in accordance with this implementation plan. Each entity shall be responsible for maintaining each of their Protection System components according to their maintenance program already in place for the legacy standards (PRC-005-1b, PRC-008-0, PRC-011-0, and PRC-017-0) or according to their maintenance program for PRC-005-2, but not both. Once an entity has designated PRC-005-2 as its maintenance program for specific Protection System components, they cannot revert to the original program for those components.

While entities are transitioning to the requirements of PRC-005-2, each entity must be prepared to identify:

- All of its applicable Protection System components.
- Whether each component has last been maintained according to PRC-005-2 or under PRC-005-1b, PRC-008-0, PRC-011-0, or PRC-017-0.

For activities being added to an entity's program as part of PRC-005-2 implementation, evidence may be available to show only a single performance of the activity until two maintenance intervals have transpired following initial implementation of PRC-005-2.

Retirement of Existing Standards:

Standards PRC-005-1b, PRC-008-0, PRC-011-0, and PRC-017-0, which are being replaced by PRC-005-2, shall remain active throughout the phased implementation period of PRC-005-2 and shall be applicable to an entity's Protection System component maintenance activities not yet transitioned to PRC-005-2. Standards PRC-005-1b, PRC-008-0, PRC-011-0, and PRC-017-0 shall be retired at midnight of the day immediately prior to the first day of the first calendar quarter one hundred fifty-six (156) months following applicable regulatory approval, or in those jurisdictions where no regulatory approval is

required, at midnight of the day immediately prior to the first day of the first calendar quarter one hundred sixty-eight (168) months following NERC Board of Trustees adoption.

Implementation Plan for Definition:

Protection System Maintenance Program – Entities shall use this definition when implementing any portions of R1, R2 R3, R4 and R5 which use this defined term.

Implementation Plan for Requirements R1, R2 and R5:

Entities shall be 100% compliant on the first day of the first calendar quarter twelve (12) months following applicable regulatory approvals, or in those jurisdictions where no regulatory approval is required, on the first day of the first calendar quarter twenty-four (24) months following NERC Board of Trustees adoption or as otherwise made effective pursuant to the laws applicable to such ERO governmental authorities.

Implementation Plan for Requirements R3 and R4:

1. For Protection System component maintenance activities with maximum allowable intervals of less than one (1) calendar year, as established in Tables 1-1 through 1-5:
   - The entity shall be 100% compliant with PRC-005-2 on the first day of the first calendar quarter eighteen (18) months following applicable regulatory approval, or in those jurisdictions where no regulatory approval is required, on the first day of the first calendar quarter thirty (30) months following NERC Board of Trustees adoption or as otherwise made effective pursuant to the laws applicable to such ERO governmental authorities.
2. For Protection System component maintenance activities with maximum allowable intervals one (1) calendar year or more, but two (2) calendar years or less, as established in Tables 1-1 through 1-5:
   - The entity shall be 100% compliant with PRC-005-2 on the first day of the first calendar quarter thirty-six (36) months following applicable regulatory approval, or in those jurisdictions where no regulatory approval is required, on the first day of the first calendar quarter forty-eight (48) months following NERC Board of Trustees adoption or as otherwise made effective pursuant to the laws applicable to such ERO governmental authorities.
3. For Protection System component maintenance activities with maximum allowable intervals of three (3) calendar years, as established in Tables 1-1 through 1-5:
   - The entity shall be at least 30% compliant with PRC-005-2 on the first day of the first calendar quarter twenty-four (24) months following applicable regulatory approval (or, for generating plants with scheduled outage intervals exceeding two years, at the conclusion of the first succeeding maintenance outage), or in those jurisdictions where no regulatory approval is required, on the first day of the first calendar quarter thirty-six (36) months following NERC Board of Trustees adoption or as otherwise made effective pursuant to the laws applicable to such ERO governmental authorities.
   - The entity shall be at least 60% compliant with PRC-005-2 on the first day of the first calendar quarter thirty-six (36) months following applicable regulatory approval, or in those jurisdictions where no regulatory approval is required, on the first day of the first calendar quarter forty-eight (48) months following NERC Board of Trustees adoption or as otherwise made effective pursuant to the laws applicable to such ERO governmental authorities.

- The entity shall be 100% compliant with PRC-005-2 on the first day of the first calendar quarter forty-eight (48) months following applicable regulatory approval, or in those jurisdictions where no regulatory approval is required, on the first day of the first calendar quarter sixty (60) months following NERC Board of Trustees adoption or as otherwise made effective pursuant to the laws applicable to such ERO governmental authorities.

4. For Protection System component maintenance activities with maximum allowable intervals of six (6) calendar years, as established in Tables 1-1 through 1-5 and Table 3:

   - The entity shall be at least 30% compliant with PRC-005-2 on the first day of the first calendar quarter thirty-six (36) months following applicable regulatory approval (or, for generating plants with scheduled outage intervals exceeding three years, at the conclusion of the first succeeding maintenance outage), or in those jurisdictions where no regulatory approval is required, on the first day of the first calendar quarter forty-eight (48) months following NERC Board of Trustees adoption or as otherwise made effective pursuant to the laws applicable to such ERO governmental authorities.
   - The entity shall be at least 60% compliant with PRC-005-2 on the first day of the first calendar quarter sixty (60) months following applicable regulatory approval, or in those jurisdictions where no regulatory approval is required, on the first day of the first calendar quarter seventy-two (72) months following NERC Board of Trustees adoption or as otherwise made effective pursuant to the laws applicable to such ERO governmental authorities.
   - The entity shall be 100% compliant with PRC-005-2 on the first day of the first calendar quarter eighty-four (84) months following applicable regulatory approval, or in those jurisdictions where no regulatory approval is required, on the first day of the first calendar quarter ninety-six (96) months following NERC Board of Trustees adoption or as otherwise made effective pursuant to the laws applicable to such ERO governmental authorities.

5. For Protection System component maintenance activities with maximum allowable intervals of twelve (12) calendar years, as established in Tables 1-1 through 1-5, Table 2, and Table 3:

   - The entity shall be at least 30% compliant with PRC-005-2 on the first day of the first calendar quarter sixty (60) months following applicable regulatory approval, or in those jurisdictions where no regulatory approval is required, on the first day of the first calendar quarter seventy-two (72) months following NERC Board of Trustees adoption or as otherwise made effective pursuant to the laws applicable to such ERO governmental authorities.
   - The entity shall be at least 60% compliant with PRC-005-2 on the first day of the first calendar quarter following one hundred eight (108) months following applicable regulatory approval, or in those jurisdictions where no regulatory approval is required, on the first day of the first calendar quarter one hundred twenty (120) months following NERC Board of Trustees adoption or as otherwise made effective pursuant to the laws applicable to such ERO governmental authorities.

- The entity shall be 100% compliant with PRC-005-2 on the first day of the first calendar quarter one hundred fifty-six (156) months following applicable regulatory approval, or in those jurisdictions where no regulatory approval is required, on the first day of the first calendar quarter one hundred sixty-eight (168) months following NERC Board of Trustees adoption or as otherwise made effective pursuant to the laws applicable to such ERO governmental authorities.

Applicability:
This standard applies to the following functional entities:

- Transmission Owner
- Generator Owner
- Distribution Provider

NERC
NORTH AMERICAN ELECTRIC RELIABILITY CORPORATION

Implementation Plan

Project 2007-17 Protection Systems Maintenance and Testing
PRC-005-02

Standards Involved

Approval:

- PRC-005-2 – Protection System Maintenance (PRC-005-2)

Retirements:

- PRC-005-1b – Transmission and Generation Protection System Maintenance and Testing (PRC-005-1b)
- PRC-008-0 – Implementation and Documentation of Underfrequency Load Shedding Equipment Maintenance Program (PRC-008-0)
- PRC-011-0 – Undervoltage Load Shedding System Maintenance and Testing (PRC-011-0)
- PRC-017-0 – Special Protection System Maintenance and Testing (PRC-017-0)

Prerequisite Approvals:

Revised definition of "Protection System."

Background:

The Implementation Plan reflects consideration of the following:

1. The requirements set forth in the proposed standard establish minimum maintenance activities for Protection System component types and the maximum allowable maintenance intervals for these maintenance activities. The maintenance activities established may not be presently performed by some entities and the established maximum allowable intervals may be shorter than those currently in use by some entities.
2. For entities not presently performing a maintenance activity or using longer intervals than the maximum allowable intervals established in the proposed standard, it is unrealistic for those entities to be immediately compliant with the new activities or intervals. Further, entities should be allowed to become compliant in such a way as to facilitate a continuing maintenance program.
3. Entities that have previously been performing maintenance within the newly specified intervals may not have all the documentation needed to demonstrate compliance with all of the maintenance activities specified.

4. The Implementation Schedule set forth in this document requires that entities develop their revised Protection System Maintenance Program within twelve (12) months following applicable regulatory approvals, or in those jurisdictions where no regulatory approval is required, on the first day of the first calendar quarter twenty-four (24) months following NERC Board of Trustees adoption. This anticipates that it will take approximately twelve (12) months to achieve regulatory approvals following adoption by the NERC Board of Trustees.
5. The Implementation Schedule set forth in this document facilitates implementation of the more lengthy maintenance intervals within the revised Protection System Maintenance Program in approximately equally-distributed steps over those intervals prescribed for each respective maintenance activity in order that entities may implement this standard in a systematic method that facilitates an effective ongoing Protection System Maintenance Program.

General Considerations:

Each Transmission Owner, Generator Owner, and Distribution Provider shall maintain documentation to demonstrate compliance with PRC-005-1b~~a~~, PRC-008-0, PRC-011-0, and PRC-017-0 until that entity meets the requirements of PRC-005-2 in accordance with this implementation plan. Each entity shall be responsible for maintaining each of their Protection System components according to their maintenance program already in place for the legacy standards (PRC-005-1b, PRC-008-0, PRC-011-0, and PRC-017-0) or according to their maintenance program for PRC-005-2, but not both. Once an entity has designated PRC-005-2 as its maintenance program for specific Protection System components, they cannot revert to the original program for those components.

While entities are transitioning to the requirements of PRC-005-2, each entity must be prepared to identify:

- All of its applicable Protection System components.
- Whether each component has last been maintained according to PRC-005-2 or under PRC-005-1b, PRC-008-0, PRC-011-0, or PRC-017-0~~, or a combination thereof~~.

For activities being added to an entity's program as part of PRC-005-2 implementation, evidence may be available to show only a single performance of the activity until two maintenance intervals have transpired following initial implementation of PRC-005-2.

Retirement of Existing Standards:

~~The existing~~ Standards PRC-005-1b, PRC-008-0, PRC-011-0, and PRC-017-0, which are being replaced by PRC-005-2, shall remain active throughout the phased implementation period of PRC-005-2 and shall be applicable to an entity's Protection System component maintenance activities not yet ~~converted~~transitioned to PRC-005-2. Standards PRC-005-1b, PRC-008-0, PRC-011-0, and PRC-017-0 shall be retired at midnight of the day immediately prior to the first day of the first calendar quarter one hundred fifty-six (156) months following applicable regulatory approval, or in those jurisdictions where no regulatory approval is required, at midnight of the day immediately prior to the first day of the first

calendar quarter one hundred sixty-eight (168) months following NERC Board of Trustees adoption~~first calendar quarter following applicable regulatory approval of PRC-005-2 in all jurisdictions~~.

Implementation Plan for Definition:

Protection System Maintenance Program – Entities shall use this definition when implementing any portions of R1, R2 R3, R4 and R5 which use this defined term.

Implementation Plan for Requirements R1, R2 and R5:

Entities shall be 100% compliant on the first day of the first calendar quarter twelve (12) months following applicable regulatory approvals, or in those jurisdictions where no regulatory approval is required, on the first day of the first calendar quarter twenty-four (24) months following NERC Board of Trustees adoption or as otherwise made effective pursuant to the laws applicable to such ERO governmental authorities.

Implementation Plan for Requirements R3 and R4:

1. For Protection System component maintenance activities with maximum allowable intervals of less than one (1) calendar year, as established in Tables 1-1 through 1-5:
   - The entity shall be 100% compliant with PRC-005-2 on the first day of the first calendar quarter eighteen (18) months following applicable regulatory approval, or in those jurisdictions where no regulatory approval is required, on the first day of the first calendar quarter thirty (30) months following NERC Board of Trustees adoption or as otherwise made effective pursuant to the laws applicable to such ERO governmental authorities.
2. For Protection System component maintenance activities with maximum allowable intervals one (1) calendar year or more, but two (2) calendar years or less, as established in Tables 1-1 through 1-5:
   - The entity shall be 100% compliant with PRC-005-2 on the first day of the first calendar quarter thirty-six (36) months following applicable regulatory approval, or in those jurisdictions where no regulatory approval is required, on the first day of the first calendar quarter forty-eight (48) months following NERC Board of Trustees adoption or as otherwise made effective pursuant to the laws applicable to such ERO governmental authorities.
3. For Protection System component maintenance activities with maximum allowable intervals of three (3) calendar years, as established in Tables 1-1 through 1-5:
   - The entity shall be at least 30% compliant with PRC-005-2 on the first day of the first calendar quarter twenty-four (24) months following applicable regulatory approval (or, for generating plants with scheduled outage intervals exceeding two years, at the conclusion of the first succeeding maintenance outage), or in those jurisdictions where no regulatory approval is required, on the first day of the first calendar quarter thirty-six (36) months following NERC Board of Trustees adoption or as otherwise made effective pursuant to the laws applicable to such ERO governmental authorities.
   - The entity shall be at least 60% compliant with PRC-005-2 on the first day of the first calendar quarter thirty-six (36) months following applicable regulatory approval, or in those jurisdictions where no regulatory approval is required, on the first day of the first calendar quarter forty-eight (48) months following NERC Board of Trustees adoption or as otherwise made effective pursuant to the laws applicable to such ERO governmental authorities.

- The entity shall be 100% compliant with PRC-005-2 on the first day of the first calendar quarter forty-eight (48) months following applicable regulatory approval, or in those jurisdictions where no regulatory approval is required, on the first day of the first calendar quarter sixty (60) months following NERC Board of Trustees adoption or as otherwise made effective pursuant to the laws applicable to such ERO governmental authorities.

4. For Protection System component maintenance activities with maximum allowable intervals of six (6) calendar years, as established in Tables 1-1 through 1-5 and Table 3:

   - The entity shall be at least 30% compliant with PRC-005-2 on the first day of the first calendar quarter thirty-six (36) months following applicable regulatory approval (or, for generating plants with scheduled outage intervals exceeding three years, at the conclusion of the first succeeding maintenance outage), or in those jurisdictions where no regulatory approval is required, on the first day of the first calendar quarter forty-eight (48) months following NERC Board of Trustees adoption or as otherwise made effective pursuant to the laws applicable to such ERO governmental authorities.
   - The entity shall be at least 60% compliant with PRC-005-2 on the first day of the first calendar quarter sixty (60) months following applicable regulatory approval, or in those jurisdictions where no regulatory approval is required, on the first day of the first calendar quarter seventy-two (72) months following NERC Board of Trustees adoption or as otherwise made effective pursuant to the laws applicable to such ERO governmental authorities.
   - The entity shall be 100% compliant with PRC-005-2 on the first day of the first calendar quarter eighty-four (84) months following applicable regulatory approval, or in those jurisdictions where no regulatory approval is required, on the first day of the first calendar quarter ninety-six (96) months following NERC Board of Trustees adoption or as otherwise made effective pursuant to the laws applicable to such ERO governmental authorities.

5. For Protection System component maintenance activities with maximum allowable intervals of twelve (12) calendar years, as established in Tables 1-1 through 1-5, Table 2, and Table 3:

   - The entity shall be at least 30% compliant with PRC-005-2 on the first day of the first calendar quarter sixty (60) months following applicable regulatory approval, or in those jurisdictions where no regulatory approval is required, on the first day of the first calendar quarter seventy-two (72) months following NERC Board of Trustees adoption or as otherwise made effective pursuant to the laws applicable to such ERO governmental authorities.
   - The entity shall be at least 60% compliant with PRC-005-2 on the first day of the first calendar quarter following one hundred eight (108) months following applicable regulatory approval, or in those jurisdictions where no regulatory approval is required, on the first day of the first calendar quarter one hundred twenty (120) months following NERC Board of Trustees adoption or as otherwise made effective pursuant to the laws applicable to such ERO governmental authorities.

- The entity shall be 100% compliant with PRC-005-2 on the first day of the first calendar quarter one hundred fifty-six (156) months following applicable regulatory approval, or in those jurisdictions where no regulatory approval is required, on the first day of the first calendar quarter one hundred sixty-eight (168) months following NERC Board of Trustees adoption or as otherwise made effective pursuant to the laws applicable to such ERO governmental authorities.

Applicability:
This standard applies to the following functional entities:

- Transmission Owner
- Generator Owner
- Distribution Provider

Unofficial Comment Form for 4th Draft of PRC-005-2: Protection System Maintenance

Project 2007-17

Please **DO NOT** use this form to submit comments on the 4th draft of the standard for Protection System Maintenance. Comments must be submitted by 8 p.m. ET **August 27, 2012** using the electronic comment form. If you have questions please contact Al McMeekin at al.mcmeekin@nerc.net or by telephone at 803-530-1963.

http://www.nerc.com/filez/standards/Protection_System_Maintenance_Project_2007-17.html

Background Information:
The standard recently passed ballot with the following results: Quorum – 79.46% and Affirmative – 79.00%; and for the VRF/VSL Non-binding poll: Quorum – 75.00% Affirmative – 70.21%. The drafting team appreciates the affirmative votes and the constructive feedback provided by the commenters. The team modified the standard based on stakeholder comments and anticipates posting the standard and associated documents in July 2012 for a 30-day formal comment period concurrent with a 10-day successive ballot.

The Protection System Maintenance and Testing Standard Drafting Team (PSMT SDT) made several changes to PRC-005-2 based on comments received from industry. The changes include:

- In Table 1-2, the interval for the second portion of the first row of the table was changed from 12 years to 6 years to correct the previous posting. After posting the previous change to this interval, the SDT concluded that a 12-year interval would not be sufficient to assure BES reliability.
- In Table 1-2, "channels" was modified to "communications systems" in two locations.
- In Table 1-2, the Component Attributes in the last row were modified to clarify that all attributes must be present to use the associated intervals and activities.
- Editorial changes were made to Tables 1-4c, 1-4d., and 1-4e. The words "Protection System" were added to the headers of Tables 1-4c and 1-4d; in Table 1-4e, a redundant "only" was removed.
- The Supplemental Reference and FAQ document was revised to reflect changes made to the draft standard and to address additional issues raised within comments.

You do not have to answer all questions. Enter All Comments in Simple Text Format.

For questions 1, 2 and 3, please provide specific comments related to the individual question. Please reserve question 4 for general comments not related to questions 1, 2 and 3. Comments not related to the specific question will not be addressed.

Insert a "check" mark in the appropriate boxes by double-clicking the gray areas.

1. In response to stakeholder input, the SDT made several changes to Table 1-2 of the standard, as detailed below:

   - The interval for the second portion of the first row of the table was changed from 12 years to 6 years.
   - The term "channels" was modified to "communications systems" in two locations.
   - The Component Attributes in the last row were modified to clarify that all attributes must be present to use the associated intervals and activities.

   Do you agree with these changes? If not, please provide specific suggestions for changes to Table 1-2 in the comment area.

   ☐ Yes
   ☐ No

   Comments:

2. The SDT modified the Implementation Plan as follows:

   - Within "Retirement of Existing Standards", the legacy standards will be retired upon full implementation of PRC-005-2, rather than upon PRC-005-2 becoming effective.
   - Within "General Considerations", each entity shall be responsible for maintaining each of their Protection System components according to their maintenance program already in place for the legacy standards (PRC-005-1b, PRC-008-0, PRC-011-0, and PRC-017-0) or according to their maintenance program for PRC-005-2, but not both.

   Do you agree with these changes? If not, please provide specific suggestions for changes to the Implementation Plan in the comment area.

   ☐ Yes
   ☐ No

   Comments:

3. The SDT made complementary changes in the "Supplementary Reference and FAQ Document" to provide supporting discussion for the Requirements within the standard. Do you have any specific suggestions for further improvements?

   ☐ Yes

   ☐ No

   Comments:

4. If you have any other comments **that you have NOT provided in response to the above questions**, please provide them here. (Please do not repeat comments that you provided elsewhere.)

   Comments:

Protection System (NERC Board of Trustees Approved Definition)

- Protective relays which respond to electrical quantities,
- Communications systems necessary for correct operation of protective functions,
- Voltage and current sensing devices providing inputs to protective relays,
- Station dc supply associated with protective functions (including station batteries, battery chargers, and non-battery-based dc supply), and
- Control circuitry associated with protective functions through the trip coil(s) of the circuit breakers or other interrupting devices.

NERC
NORTH AMERICAN ELECTRIC
RELIABILITY CORPORATION

Supplementary Reference and FAQ - Draft

PRC-005-2 Protection System Maintenance

July 2012

RELIABILITY | ACCOUNTABILITY

3353 Peachtree Road NE
Suite 600, North Tower
Atlanta, GA 30326
404-446-2560 | www.nerc.com

Table of Contents

Table of Contents ii

1. Introduction and Summary 1

2. Need for Verifying Protection System Performance 2

2.1 Existing NERC Standards for Protection System Maintenance and Testing 2

2.2 Protection System Definition 3

2.3 Applicability of New Protection System Maintenance Standards 3

2.3.1 Frequently Asked Questions: 4

2.4 Applicable Relays 6

2.4.1 Frequently Asked Questions: 6

3. Protection Systems Product Generations 8

4. Definitions 10

4.1 Frequently Asked Questions: 11

5. Time-Based Maintenance (TBM) Programs 13

5.1 Maintenance Practices 13

5.1.1 Frequently Asked Questions: 15

5.2 Extending Time-Based Maintenance 16

5.2.1 Frequently Asked Questions: 16

6. Condition-Based Maintenance (CBM) Programs 18

To use the extended time intervals available through Condition Based Maintenance, simply look for the rows in the Tables that refer to monitored items. 18

6.1 Frequently Asked Questions: 18

7. Time-Based Versus Condition-Based Maintenance 20

7.1 Frequently Asked Questions: 20

8. Maximum Allowable Verification Intervals 26

8.1 Maintenance Tests 26

8.1.1 Table of Maximum Allowable Verification Intervals 26

8.1.2 Additional Notes for Tables 1-1 through 1-5 and Table 3 28

8.1.3 Frequently Asked Questions: 29

8.2 Retention of Records 33

8.2.1 Frequently Asked Questions: 34

8.3 Basis for Table 1 Intervals 36

8.4 Basis for Extended Maintenance Intervals for Microprocessor Relays 37

9. Performance-Based Maintenance Process 40

9.1 Minimum Sample Size 41

9.2 Frequently Asked Questions: 43

10. Overlapping the Verification of Sections of the Protection System 54

10.1 Frequently Asked Questions: 54

11. Monitoring by Analysis of Fault Records 55

11.1 Frequently Asked Questions: 56

12. Importance of Relay Settings in Maintenance Programs 57

12.1 Frequently Asked Questions: 57

13. Self-Monitoring Capabilities and Limitations 60

13.1 Frequently Asked Questions: 61

14. Notification of Protection System Failures 62

15. Maintenance Activities 63

15.1 Protective Relays (Table 1-1) 63

15.1.1 Frequently Asked Questions: 63

15.2 Voltage & Current Sensing Devices (Table 1-3) 63

15.2.1 Frequently Asked Questions: 65

15.3 Control circuitry associated with protective functions (Table 1-5) 66

15.3.1 Frequently Asked Questions: 68

15.4 Batteries and DC Supplies (Table 1-4) 70

15.4.1 Frequently Asked Questions: 70

15.5 Associated communications equipment (Table 1-2) 84

15.5.1 Frequently Asked Questions: 85

15.6 Alarms (Table 2) 88

15.6.1 Frequently Asked Questions: 88

15.7 Distributed UFLS and Distributed UVLS Systems (Table 3) 89

15.7.1 Frequently Asked Questions: 89

15.8 Examples of Evidence of Compliance 90

15.8.1 Frequently Asked Questions: 90

References 92

Figures 94

Figure 1: Typical Transmission System 94

Figure 2: Typical Generation System 95

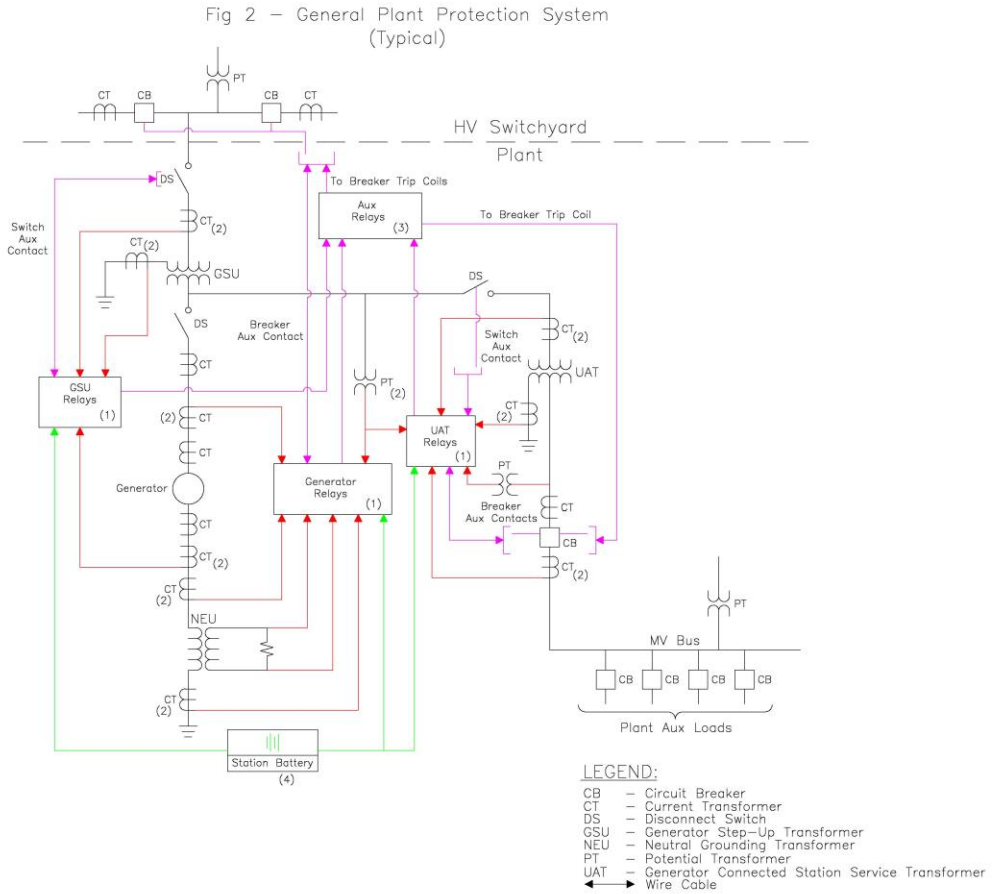

..... 95

Figure 1 & 2 Legend – components of Protection Systems 96

Appendix A 97

Appendix A 97

Appendix B 100

Appendix B — Protection System Maintenance Standard Drafting Team 100

1. Introduction and Summary

Note: This supplementary reference for PRC-005-2 is neither mandatory nor enforceable.

NERC currently has four Reliability Standards that are mandatory and enforceable in the United States and address various aspects of maintenance and testing of Protection and Control Systems.

These standards are:

PRC-005-1 — Transmission and Generation Protection System Maintenance and Testing

PRC-008-0 — Underfrequency Load Shedding Equipment Maintenance Programs

PRC-011-0 — UVLS System Maintenance and Testing

PRC-017-0 — Special Protection System Maintenance and Testing

While these standards require that applicable entities have a maintenance program for Protection Systems, and that these entities must be able to demonstrate they are carrying out such a program, there are no specifics regarding the technical requirements for Protection System maintenance programs. Furthermore, FERC Order 693 directed additional modifications respective to Protection System maintenance programs. PRC-005-2 combines and replaces PRC-005, PRC-008, PRC-011 and PRC-017.

2. Need for Verifying Protection System Performance

Protective relays have been described as silent sentinels, and do not generally demonstrate their performance until a Fault or other power system problem requires that they operate to protect power system Elements, or even the entire Bulk Electric System (BES). Lacking Faults, switching operations or system problems, the Protection Systems may not operate, beyond static operation, for extended periods. A Misoperation - a false operation of a Protection System or a failure of the Protection System to operate, as designed, when needed - can result in equipment damage, personnel hazards, and wide-area Disturbances or unnecessary customer outages. Maintenance or testing programs are used to determine the performance and availability of Protection Systems.

Typically, utilities have tested Protection Systems at fixed time intervals, unless they had some incidental evidence that a particular Protection System was not behaving as expected. Testing practices vary widely across the industry. Testing has included system functionality, calibration of measuring devices, and correctness of settings. Typically, a Protection System must be visited at its installation site and, in many cases, removed from service for this testing.

Fundamentally, a Reliability Standard for Protection System Maintenance and Testing requires the performance of the maintenance activities that are necessary to detect and correct plausible age and service related degradation of the Protection System components, such that a properly built and commissioned Protection System will continue to function as designed over its service life.

Similarly station batteries, which are an important part of the station dc supply, are not called upon to provide instantaneous dc power to the Protection System until power is required by the Protection System to operate circuit breakers or interrupting devices to clear Faults or to isolate equipment.

2.1 Existing NERC Standards for Protection System Maintenance and Testing

For critical BES protection functions, NERC standards have required that each utility or asset owner define a testing program. The starting point is the existing Standard PRC-005, briefly restated as follows:

Purpose: To document and implement programs for the maintenance of all Protection Systems affecting the reliability of the Bulk Electric System (BES) so that these Protection Systems are kept in working order.

PRC-005-1 is not specific on where the boundaries of the Protection Systems lie. However, the definition of Protection System in the NERC Glossary of Terms used in Reliability Standards indicates what must be included as a minimum.

At the beginning of the project to develop PRC-005-2, the definition of Protection System was:

Protective relays, associated communications Systems, voltage and current sensing devices, station batteries and dc control circuitry.

Applicability: Owners of generation and transmission Protection Systems.

Requirements: The owner shall have a documented maintenance program with test intervals. The owner must keep records showing that the maintenance was performed at the specified intervals.

2.2 Protection System Definition

The most recently approved definition of Protection Systems is:

- Protective relays which respond to electrical quantities,
- Communications systems necessary for correct operation of protective functions,
- Voltage and current sensing devices providing inputs to protective relays,
- Station dc supply associated with protective functions (including station batteries, battery chargers, and non-battery-based dc supply), and
- Control circuitry associated with protective functions through the trip coil(s) of the circuit breakers or other interrupting devices.

2.3 Applicability of New Protection System Maintenance Standards

The BES purpose is to transfer bulk power. The applicability language has been changed from the original PRC-005:

"...affecting the reliability of the Bulk Electric System (BES)…"

To the present language:

"…that are installed for the purpose of detecting Faults on BES Elements (lines, buses, transformers, etc.)."

The drafting team intends that this standard will follow with any definition of the Bulk Electric System. There should be no ambiguity; if the Element is a BES Element, then the Protection System protecting that Element should then be included within this standard. If there is regional variation to the definition, then there will be a corresponding regional variation to the Protection Systems that fall under this standard.

There is no way for the Standard Drafting Team to know whether a specific 230KV line, 115KV line (even 69KV line), for example, should be included or excluded. Therefore, the team set the clear intent that the standard language should simply be applicable to Protection Systems for BES Elements.

The BES is a NERC defined term that, from time to time, may undergo revisions. Additionally, there may even be regional variations that are allowed in the present and future definitions. See the NERC Glossary of Terms for the present, in-force definition. See the applicable Regional Reliability Organization for any applicable allowed variations.

While this standard will undergo revisions in the future, this standard will not attempt to keep up with revisions to the NERC definition of BES, but, rather, simply make BES Protection Systems applicable.

The Standard is applied to Generator Owners (GO) and Transmission Owners (TO) because GOs and TOs have equipment that is BES equipment. The standard brings in Distribution Providers (DP) because, depending on the station configuration of a particular substation, there may be Protection System equipment installed at a non-transmission voltage level (Distribution

Provider equipment) that is wholly or partially installed to protect the BES. PRC-005-2 would apply to this equipment. An example is underfrequency load-shedding, which is frequently applied well down into the distribution system to meet PRC-007-0.

As this standard is intended to replace the existing PRC-005, PRC-008, PRC-011 and PRC-017, those standards are used in the construction of this revision of PRC-005-1. Much of the original intent of those standards was carried forward whenever it was possible to continue the intent without a disagreement with FERC Order 693. For example, the original PRC-008 was constructed quite differently than the original PRC-005. The drafting team agrees with the intent of this and notes that distributed tripping schemes would have to exhibit multiple failures to trip before they would prove to be significant, as opposed to a single failure to trip of, for example, a transmission Protection System Bus Differential lock-out relay. While many failures of these distribution breakers could add up to be significant, it is also believed that distribution breakers are operated often on just Fault clearing duty; and, therefore, the distribution circuit breakers are operated at least as frequently as stipulated in any requirement in this standard.

Additionally, since this standard will now replace PRC-011, it will be important to make the distinction between under-voltage Protection Systems that protect individual Loads and Protection Systems that are UVLS schemes that protect the BES. Any UVLS scheme that had been applicable under PRC-011 will now be applicable under this revision of PRC-005-1. An example of an under-voltage load-shedding scheme that is not applicable to this standard is one in which the tripping action was intended to prevent low distribution voltage to a specific Load from a Transmission system that was intact except for the line that was out of service, as opposed to preventing a Cascading outage or Transmission system collapse.

It had been correctly noted that the devices needed for PRC-011 are the very same types of devices needed in PRC-005.

Thus, a standard written for Protection Systems of the BES can easily make the needed requirements for Protection Systems, and replace some other standards at the same time.

2.3.1 Frequently Asked Questions:

What exactly is the BES, or Bulk Electric System?

BES is the abbreviation for Bulk Electric System. BES is a term in the Glossary of Terms used in Reliability Standards, and is not being modified within this draft standard.
NERC's approved definition of Bulk Electric System is:

As defined by the Regional Reliability Organization, the electrical generation resources, transmission lines, Interconnections with neighboring Systems, and associated equipment, generally operated at voltages of 100 kV or higher. Radial transmission Facilities serving only Load with one transmission source are generally not included in this definition.

The BES definition is presently undergoing the process of revision.

Each regional entity implements a definition of the Bulk Electric System that is based on this NERC definition; in some cases, supplemented by additional criteria. These regional definitions have been documented and provided to FERC as part of a *June 14, 2007 Informational Filing*.

Why is Distribution Provider included within the Applicable Entities and as a responsible entity within several of the requirements? Wouldn't anyone having relevant Facilities be a Transmission Owner?

Depending on the station configuration of a particular substation, there may be Protection System equipment installed at a non-transmission voltage level (Distribution Provider equipment) that is wholly or partially installed to protect the BES. PRC-005-2 would apply to this equipment. An example is underfrequency load-shedding, which is frequently applied well down into the distribution system to meet PRC-007-0.

We have an under voltage load-shedding (UVLS) system in place that prevents one of our distribution substations from supplying extremely low voltage in the case of a specific transmission line outage. The transmission line is part of the BES. Does this mean that our UVLS system falls within this standard?

The situation, as stated, indicates that the tripping action was intended to prevent low distribution voltage to a specific Load from a Transmission System that was intact, except for the line that was out of service, as opposed to preventing Cascading outage or Transmission system collapse.

This standard is not applicable to this UVLS.

We have a UFLS or UVLS scheme that sheds the necessary Load through distribution-side circuit breakers and circuit reclosers. Do the trip-test requirements for circuit breakers apply to our situation?

No. Distributed tripping schemes would have to exhibit multiple failures to trip before they would prove to be significant, as opposed to a single failure to trip of, for example, a transmission Protection System Bus Differential lock-out relay. While many failures of these distribution breakers could add up to be significant, it is also believed that distribution breakers are operated often on just Fault clearing duty; and, therefore, the distribution circuit breakers are operated at least as frequently as any requirements that might have appeared in this standard.

We have a UFLS scheme that, in some locales, sheds the necessary Load through non-BES circuit breakers and, occasionally, even circuit switchers. Do the trip-test requirements for circuit breakers apply to our situation?

If your "non-BES circuit breaker" has been brought into this standard by the inclusion of UFLS requirements, and otherwise would not have been brought into this standard, then the answer is that there are no trip-test requirements. For these devices that are otherwise non-BES assets, these tripping schemes would have to exhibit multiple failures to trip before they would prove to be as significant as, for example, a single failure to trip of a Transmission Protection System Bus Differential lock-out relay.

2.4 Applicable Relays

The NERC Glossary definition has a Protection System including relays, dc supply, current and voltage sensing devices, dc control circuitry and associated communications circuits. The relays to which this standard applies are those protective relays that respond to electrical quantities and provide a trip output to trip coils, dc control circuitry or associated communications equipment. This definition extends to IEEE Device No. 86 (lockout relay) and IEEE Device No. 94 (tripping or trip-free relay), as these devices are tripping relays that respond to the trip signal of the protective relay that processed the signals from the current and voltage-sensing devices.

Relays that respond to non-electrical inputs or impulses (such as, but not limited to, vibration, pressure, seismic, thermal or gas accumulation) are not included.

2.4.1 Frequently Asked Questions:

Are power circuit reclosers, reclosing relays, closing circuits and auto-restoration schemes covered in this Standard?

No. This standard covers protective relays that use electrical quantity measurements to determine anomalies and to trip a portion of the BES. Reclosers, reclosing relays, closing circuits and auto-restoration schemes are used to cause devices to close, as opposed to electrical-measurement relays and their associated circuits that cause circuit interruption from the BES; such closing devices and schemes are more appropriately covered under other NERC standards. There is one notable exception: Since PRC-017 will be superseded by PRC-005-2, then if a Special Protection System (previously covered by PRC-017) incorporates automatic closing of breakers, then the SPS-related closing devices must be tested accordingly.

I use my protective relays only as sources of metered quantities and breaker status for SCADA and EMS through a substation distributed RTU or data concentrator to the control center. What are the maintenance requirements for the relays?

This standard addresses Protection Systems that are installed for the purpose of detecting Faults on BES Elements (lines, buses, transformers, etc.). Protective relays, providing only the functions mentioned in the question, are not included.

Are Reverse Power Relays installed on the low-voltage side of distribution banks considered to be components of "Protection Systems that are installed for the purpose of detecting Faults on BES Elements (lines, buses, transformers, etc.)"?

Reverse power relays are often installed to detect situations where the transmission source becomes de-energized and the distribution bank remains energized from a source on the low-voltage side of the transformer and the settings are calculated based on the charging current of the transformer from the low-voltage side. Although these relays may operate as a result of a fault on a BES element, they are not 'installed for the purpose of detecting' these faults.

Is a Sudden Pressure Relay an auxiliary tripping relay?

No. IEEE C37.2-2008 assigns the Device No.# 94 to auxiliary tripping relays. Sudden pressure relays are assigned Device No.# 63. Sudden pressure relays are presently excluded from the standard because it does not utilize voltage and/or current measurements to determine anomalies. Devices that use anything other than electrical detection means are excluded. The trip path from a sudden pressure device is a part of the Protection System control circuitry. The sensing element is omitted from PRC-005-2 testing requirements because the SDT is unaware of industry-recognized testing protocol for the sensing elements. The SDT believes that

Protection Systems that trip (or can trip) the BES should be included. This position is consistent with the currently-approved PRC-005-1a, consistent with the SAR for Project 2007-17, and understands this to be consistent with the position of FERC staff.

My mechanical device does not operate electrically and does not have calibration settings; what maintenance activities apply?

You must conduct a test(s) to verify the integrity of any trip circuit that is a part of a Protection System. This standard does not cover circuit breaker maintenance or transformer maintenance. The standard also does not presently cover testing of devices, such as sudden pressure relays (63), temperature relays (49), and other relays which respond to mechanical parameters, rather than electrical parameters. There is an expectation that Fault pressure relays and other non-electrically initiated devices may become part of some maintenance standard. This standard presently covers trip paths. It might seem incongruous to test a trip path without a present requirement to test the device; and, thus, be arguably more work for nothing. But one simple test to verify the integrity of such a trip path could be (but is not limited to) a voltage presence test, as a dc voltage monitor might do if it were installed monitoring that same circuit.

The standard specifically mentions auxiliary and lock-out relays. What is an auxiliary tripping relay?

An auxiliary relay, IEEE Device No.# 94, is described in IEEE Standard C37.2-2008 as: “A device that functions to trip a circuit breaker, contactor, or equipment; to permit immediate tripping by other devices; or to prevent immediate reclosing of a circuit interrupter if it should open automatically, even though its closing circuit is maintained closed.”

What is a lock-out relay?

A lock-out relay, IEEE Device No.# 86, is described in IEEE Standard C37.2 as: “A device that trips and maintains the associated equipment or devices inoperative until it is reset by an operator, either locally or remotely.”

3. Protection Systems Product Generations

The likelihood of failure and the ability to observe the operational state of a critical Protection System both depends on the technological generation of the relays, as well as how long they have been in service. Unlike many other transmission asset groups, protection and control Systems have seen dramatic technological changes spanning several generations. During the past 20 years, major functional advances are primarily due to the introduction of microprocessor technology for power system devices, such as primary measuring relays, monitoring devices, control Systems, and telecommunications equipment.

Modern microprocessor-based relays have six significant traits that impact a maintenance strategy:

- Self monitoring capability - the processors can check themselves, peripheral circuits, and some connected substation inputs and outputs, such as trip coil continuity. Most relay users are aware that these relays have self monitoring, but are not focusing on exactly what internal functions are actually being monitored. As explained further below, every element critical to the Protection System must be monitored, or else verified periodically.
- Ability to capture Fault records showing how the Protection System responded to a Fault in its zone of protection, or to a nearby Fault for which it is required not to operate.
- Ability to meter currents and voltages, as well as status of connected circuit breakers, continuously during non-Fault times. The relays can compute values, such as MW and MVAR line flows, that are sometimes used for operational purposes, such as SCADA.
- Data communications via ports that provide remote access to all of the results of Protection System monitoring, recording and measurement.
- Ability to trip or close circuit breakers and switches through the Protection System outputs, on command from remote data communications messages, or from relay front panel button requests.
- Construction from electronic components, some of which have shorter technical life or service life than electromechanical components of prior Protection System generations.

There have been significant advances in the technology behind the other components of Protection Systems. Microprocessors are now a part of battery chargers, associated communications equipment, voltage and current-measuring devices, and even the control circuitry (in the form of software-latches replacing lock-out relays, etc.).

Any Protection System component can have self-monitoring and alarming capability, not just relays. Because of this technology, extended time intervals can find their way into all components of the Protection System.

This standard also recognizes the distinct advantage of using advanced technology to justifiably defer or even eliminate traditional maintenance. Just as a hand-held calculator does not require routine testing and calibration, neither does a calculation buried in a microprocessor-based device that results in a “lock-out.” Thus, the software-latch 86 that replaces an electro-

mechanical 86 does not require routine trip testing. Any trip circuitry associated with the "soft 86" would still need applicable verification activities performed, but the actual "86" does not have to be "electrically operated" or even toggled.

4. Definitions

Protection System Maintenance Program (PSMP) — An ongoing program by which Protection System components are kept in working order and proper operation of malfunctioning components is restored. A maintenance program for a specific component includes one or more of the following activities:

- Verify — Determine that the component is functioning correctly.
- Monitor — Observe the routine in-service operation of the component.
- Test — Apply signals to a component to observe functional performance or output behavior, or to diagnose problems.
- Inspect — Detect visible signs of component failure, reduced performance and degradation.
- Calibrate — Adjust the operating threshold or measurement accuracy of a measuring element to meet the intended performance requirement.
- Unresolved Maintenance Issue – A deficiency identified during a maintenance activity that causes the component to not meet the intended performance, cannot be corrected during the maintenance interval, and requires follow-up corrective action.
- Segment – Protection Systems or components of a consistent design standard, or a particular model or type from a single manufacturer that typically share other common elements. Consistent performance is expected across the entire population of a Segment. A Segment must contain at least sixty (60) individual components.
- Component Type - Any one of the five specific elements of the Protection System definition.
- Component – A Component is any individual discrete piece of equipment included in a Protection System, including but not limited to a protective relay or current sensing device. The designation of what constitutes a control circuit Component is dependent upon how an entity performs and tracks the testing of the control circuitry. Some entities test their control circuits on a breaker basis whereas others test their circuitry on a local zone of protection basis. Thus, entities are allowed the latitude to designate their own definitions of control circuit Components. Another example of where the entity has some discretion on determining what constitutes a single Component is the voltage and current sensing devices, where the entity may choose either to designate a full three-phase set of such devices or a single device as a single Component.*
- Countable Event – A failure of a Component requiring repair or replacement, any condition discovered during the maintenance activities in Tables 1-1 through 1-5 and Table 3 which requires corrective action or a Misoperation attributed to hardware failure or calibration failure. Misoperations due to product design errors, software errors, relay settings different from specified settings, Protection System Component configuration errors, or Protection System application errors are not included in Countable Events.

4.1 Frequently Asked Questions:

Why does PRC-005-2 not specifically require maintenance and testing procedures, as reflected in the previous standard, PRC-005-1?

PRC-005-1 does not require detailed maintenance and testing procedures, but instead requires summaries of such procedures, and is not clear on what is actually required. PRC-005-2 requires a documented maintenance program, and is focused on establishing requirements rather than prescribing methodology to meet those requirements. Between the activities identified in the Tables 1-1 through 1-5, Table 2 and Table 3 (collectively the "Tables"), and the various components of the definition established for a "Protection System Maintenance Program," PRC-005-2 establishes the activities and time basis for a Protection System Maintenance Program to a level of detail not previously required.

Please clarify what is meant by "restore" in the definition of maintenance.

The description of "restore" in the definition of a Protection System Maintenance Program addresses corrective activities necessary to assure that the component is returned to working order following the discovery of its failure or malfunction. The Maintenance Activities specified in the Tables do not present any requirements related to Restoration; R5 of the standard does require that the entity "shall demonstrate efforts to correct any identified Unresolved Maintenance Issues." Some examples of restoration (or correction of Unresolved Maintenance Issues) include, but are not limited to, replacement of capacitors in distance relays to bring them to working order; replacement of relays, or other Protection System components, to bring the Protection System to working order; upgrade of electromechanical or solid-state protective relays to microprocessor-based relays following the discovery of failed components. Restoration, as used in this context, is not to be confused with restoration rules as used in system operations. Maintenance activity necessarily includes both the detection of problems and the repairs needed to eliminate those problems. This standard does not identify all of the Protection System problems that must be detected and eliminated, rather it is the intent of this standard that an entity determines the necessary working order for their various devices, and keeps them in working order. If an equipment item is repaired or replaced, then the entity can restart the maintenance-time-interval-clock, if desired; however, the replacement of equipment does not remove any documentation requirements that would have been required to verify compliance with time-interval requirements. In other words, do not discard maintenance data that goes to verify your work.

The retention of documentation for new and/or replaced equipment is all about proving that the maintenance intervals had been in compliance. For example, a long-range plan of upgrades might lead an entity to ignore required maintenance; retaining the evidence of prior maintenance that existed before any retirements and upgrades proves compliance with the standard.

Please clarify what is meant by "…demonstrate efforts to correct an Unresolved Maintenance Issue…"; why not measure the completion of the corrective action?

Management of completion of the identified Unresolved Maintenance Issue is a complex topic that falls outside of the scope of this standard. There can be any number of supply, process and management problems that make setting repair deadlines impossible. The SDT specifically chose the phrase "demonstrate efforts to correct" (with guidance from NERC Staff) because of the concern that many more complex Unresolved Maintenance Issues might require greater

than the remaining maintenance interval to resolve (and yet still be a "closed-end process"). For example, a problem might be identified on a VRLA battery during a six-month check. In instances such as one that requiring battery replacement as part of the long-term resolution, it is highly unlikely that the battery could be replaced in time to meet the six-calendar-month requirement for this maintenance activity. The SDT does not believe entities should be found in violation of a maintenance program requirement because of the inability to complete a remediation program within the original maintenance interval. The SDT does believe corrective actions should be timely, but concludes it would be impossible to postulate all possible remediation projects; and, therefore, impossible to specify bounding time frames for resolution of all possible Unresolved Maintenance Issues, or what documentation might be sufficient to provide proof that effective corrective action is being undertaken.

5. Time-Based Maintenance (TBM) Programs

Time-based maintenance is the process in which Protection Systems are maintained or verified according to a time schedule. The scheduled program often calls for technicians to travel to the physical site and perform a functional test on Protection System components. However, some components of a TBM program may be conducted from a remote location - for example, tripping a circuit breaker by communicating a trip command to a microprocessor relay to determine if the entire Protection System tripping chain is able to operate the breaker. Similarly, all Protection System components can have the ability to remotely conduct tests, either on-command or routinely; the running of these tests can extend the time interval between hands-on maintenance activities.

5.1 Maintenance Practices

Maintenance and testing programs often incorporate the following types of maintenance practices:

- TBM – time-based maintenance – externally prescribed maximum maintenance or testing intervals are applied for components or groups of components. The intervals may have been developed from prior experience or manufacturers' recommendations. The TBM verification interval is based on a variety of factors, including experience of the particular asset owner, collective experiences of several asset owners who are members of a country or regional council, etc. The maintenance intervals are fixed and may range in number of months or in years.

  TBM can include review of recent power system events near the particular terminal. Operating records may verify that some portion of the Protection System has operated correctly since the last test occurred. If specific protection scheme components have demonstrated correct performance within specifications, the maintenance test time clock can be reset for those components.

- PBM – Performance-Based Maintenance - intervals are established based on analytical or historical results of TBM failure rates on a statistically significant population of similar components. Some level of TBM is generally followed. Statistical analyses accompanied by adjustments to maintenance intervals are used to justify continued use of PBM-developed extended intervals when test failures or in-service failures occur infrequently.

- CBM – condition-based maintenance – continuously or frequently reported results from non-disruptive self-monitoring of components demonstrate operational status as those components remain in service. Whatever is verified by CBM does not require manual testing, but taking advantage of this requires precise technical focus on exactly what parts are included as part of the self-diagnostics. While the term "Condition-Based-Maintenance" (CBM) is no longer used within the standard itself, it is important to note that the concepts of CBM are a part of the standard (in the form of extended time intervals through status-monitoring). These extended time intervals are only allowed (in the absence of PBM) if the condition of the device is monitored (CBM). As a consequence of the "monitored-basis-time-intervals" existing within the standard, the explanatory discussions within this Supplementary Reference concerned with CBM will remain in this reference and are discussed as CBM.

Microprocessor-based Protection System components that perform continuous self-monitoring verify correct operation of most components within the device. Self-monitoring capabilities may include battery continuity, float voltages, unintentional grounds, the ac signal inputs to a relay, analog measuring circuits, processors and memory for measurement, protection, and data communications, trip circuit monitoring, and protection or data communications signals (and many, many more measurements). For those conditions, failure of a self-monitoring routine generates an alarm and may inhibit operation to avoid false trips. When internal components, such as critical output relay contacts, are not equipped with self-monitoring, they can be manually tested. The method of testing may be local or remote, or through inherent performance of the scheme during a system event.

The TBM is the overarching maintenance process of which the other types are subsets. Unlike TBM, PBM intervals are adjusted based on good or bad experiences. The CBM verification intervals can be hours, or even milliseconds between non-disruptive self-monitoring checks within or around components as they remain in service.

TBM, PBM, and CBM can be combined for individual components, or within a complete Protection System. The following diagram illustrates the relationship between various types of maintenance practices described in this section. In the Venn diagram, the overlapping regions show the relationship of TBM with PBM historical information and the inherent continuous monitoring offered through CBM.

This figure shows:

- Region 1: The TBM intervals that are increased based on known reported operational condition of individual components that are monitoring themselves.
- Region 2: The TBM intervals that are adjusted up or down based on results of analysis of maintenance history of statistically significant population of similar products that have been subject to TBM.
- Region 3: Optimal TBM intervals based on regions 1 and 2.

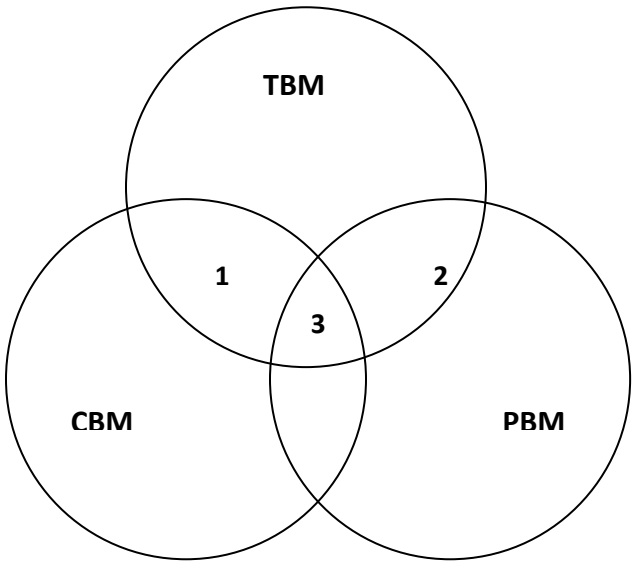

Relationship of time-based maintenance types

5.1.1 Frequently Asked Questions:

The standard seems very complicated, and is difficult to understand. Can it be simplified?

Because the standard is establishing parameters for condition-based Maintenance (R1) and Performance-Based Maintenance (R2), in addition to simple time-based Maintenance, it does appear to be complicated. At its simplest, an entity needs to ONLY perform time-based maintenance according to the unmonitored rows of the Tables. If an entity then wishes to take advantage of monitoring on its Protection System components and its available lengthened time intervals, then it may, as long as the component has the listed monitoring attributes. If an entity wishes to use historical performance of its Protection System components to perform Performance-Based Maintenance, then R2 applies.

Please see the following diagram, which provides a "flow chart" of the standard.

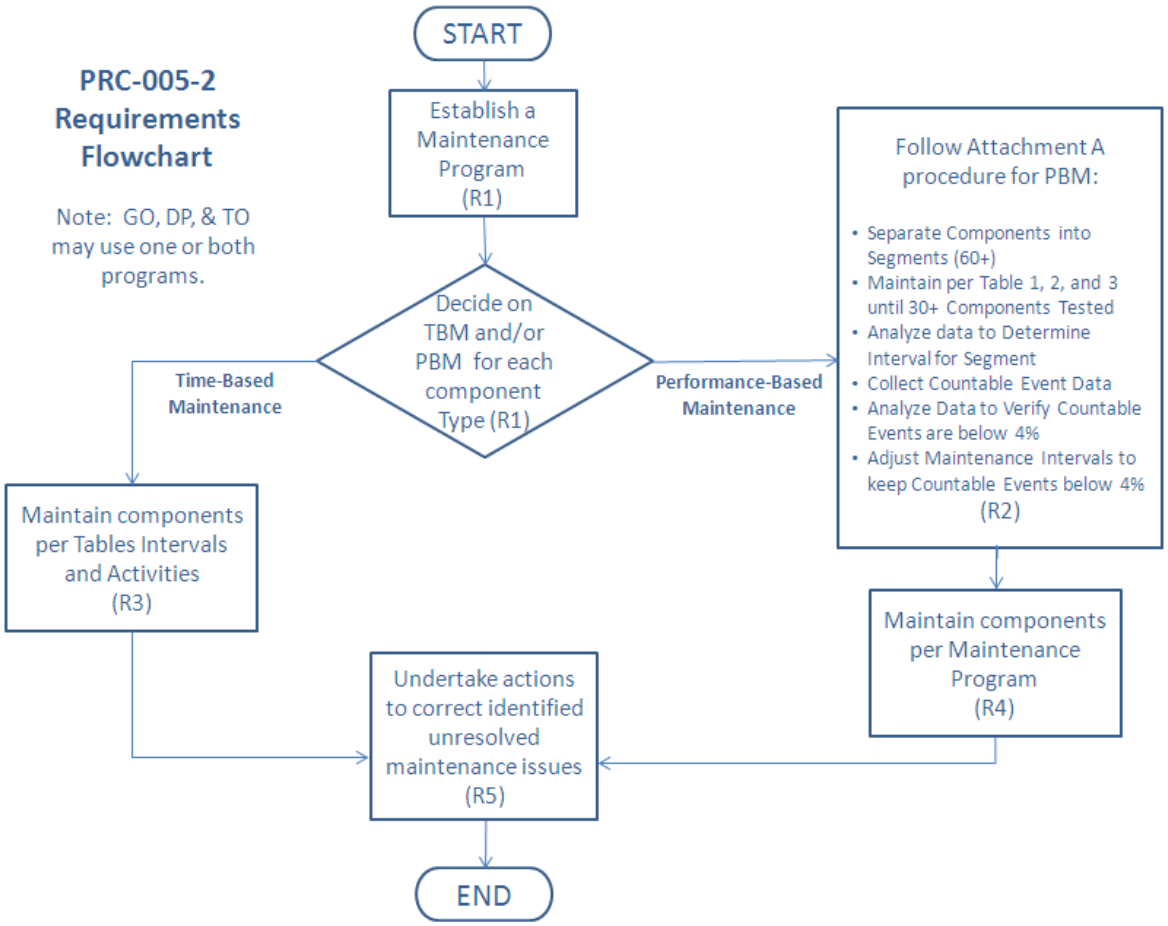

We have an electromechanical (unmonitored) relay that has a trip output to a lockout relay (unmonitored) which trips our transformer off-line by tripping the transformer's high-side and low-side circuit breakers. What testing must be done for this system?

This system is made up of components that are all unmonitored. Assuming a time-based Protection System maintenance program schedule (as opposed to a Performance-Based

maintenance program), each component must be maintained per the most frequent hands-on activities listed in the Tables.

5.2 Extending Time-Based Maintenance

All maintenance is fundamentally time-based. Default time-based intervals are commonly established to assure proper functioning of each component of the Protection System, when data on the reliability of the components is not available other than observations from time-based maintenance. The following factors may influence the established default intervals:

- If continuous indication of the functional condition of a component is available (from relays or chargers or any self-monitoring device), then the intervals may be extended, or manual testing may be eliminated. This is referred to as condition-based maintenance or CBM. CBM is valid only for precisely the components subject to monitoring. In the case of microprocessor-based relays, self-monitoring may not include automated diagnostics of every component within a microprocessor.
- Previous maintenance history for a group of components of a common type may indicate that the maintenance intervals can be extended, while still achieving the desired level of performance. This is referred to as Performance-Based Maintenance, or PBM. It is also sometimes referred to as reliability-centered maintenance, or RCM; but PBM is used in this document.
- Observed proper operation of a component may be regarded as a maintenance verification of the respective component or element in a microprocessor-based device. For such an observation, the maintenance interval may be reset only to the degree that can be verified by data available on the operation. For example, the trip of an electromechanical relay for a Fault verifies the trip contact and trip path, but only through the relays in series that actually operated; one operation of this relay cannot verify correct calibration.

Excessive maintenance can actually decrease the reliability of the component or system. It is not unusual to cause failure of a component by removing it from service and restoring it. The improper application of test signals may cause failure of a component. For example, in electromechanical overcurrent relays, test currents have been known to destroy convolution springs.

In addition, maintenance usually takes the component out of service, during which time it is not able to perform its function. Cutout switch failures, or failure to restore switch position, commonly lead to protection failures.

5.2.1 Frequently Asked Questions:

If I show the protective device out of service while it is being repaired, then can I add it back as a new protective device when it returns? If not, my relay testing history would show that I was out of compliance for the last maintenance cycle.

The maintenance and testing requirements (R5) (in essence) state "…shall demonstrate efforts to correct any identified Unresolved Maintenance Issues." The type of corrective activity is not stated; however it could include repairs or replacements.

Your documentation requirements will increase, of course, to demonstrate that your device tested bad and had corrective actions initiated. Your regional entity could very well ask for documentation showing status of your corrective actions.

6. Condition-Based Maintenance (CBM) Programs

Condition-based maintenance is the process of gathering and monitoring the information available from modern microprocessor-based relays and other intelligent electronic devices (IEDs) that monitor Protection System elements. These devices generate monitoring information during normal operation, and the information can be assessed at a convenient location remote from the substation. The information from these relays and IEDs is divided into two basic types:

1. Information can come from background self-monitoring processes, programmed by the manufacturer, or by the user in device logic settings. The results are presented by alarm contacts or points, front panel indications, and by data communications messages.
2. Information can come from event logs, captured files, and/or oscillographic records for Faults and Disturbances, metered values, and binary input status reports. Some of these are available on the device front panel display, but may be available via data communications ports. Large files of Fault information can only be retrieved via data communications. These results comprise a mass of data that must be further analyzed for evidence of the operational condition of the Protection System.

Using these two types of information, the user can develop an effective maintenance program carried out mostly from a central location remote from the substation. This approach offers the following advantages:

1. **Non-invasive Maintenance:** The system is kept in its normal operating state, without human intervention for checking. This reduces risk of damage, or risk of leaving the system in an inoperable state after a manual test. Experience has shown that keeping human hands away from equipment known to be working correctly enhances reliability.
2. **Virtually Continuous Monitoring:** CBM will report many hardware failure problems for repair within seconds or minutes of when they happen. This reduces the percentage of problems that are discovered through incorrect relaying performance. By contrast, a hardware failure discovered by TBM may have been there for much of the time interval between tests, and there is a good chance that some devices will show health problems by incorrect operation before being caught in the next test round. The frequent or continuous nature of CBM makes the effective verification interval far shorter than any required TBM maximum interval.

To use the extended time intervals available through Condition Based Maintenance, simply look for the rows in the Tables that refer to monitored items.

6.1 Frequently Asked Questions:

My microprocessor relays and dc circuit alarms are contained on relay panels in a 24-hour attended control room. Does this qualify as an extended time interval condition-based (monitored) system?

Yes, provided the station attendant (plant operator, etc.) monitors the alarms and other indications (comparable to the monitoring attributes) and reports them within the given time limits that are stated in the criteria of the Tables.

When documenting the basis for inclusion of components into the appropriate levels of monitoring, as per Requirement R1 (Part 1.4) of the standard, is it necessary to provide this documentation about the device by listing of every component and the specific monitoring attributes of each device?

No. While maintaining this documentation on the device level would certainly be permissible, it is not necessary. Global statements can be made to document appropriate levels of monitoring for the entire population of a component type or portion thereof.

For example, it would be permissible to document the conclusion that all BES substation dc supply battery chargers are monitored by stating the following within the program description:

> "All substation dc supply battery chargers are considered monitored and subject to the rows for monitored equipment of Table 1-4 requirements, as all substation dc supply battery chargers are equipped with dc voltage alarms and ground detection alarms that are sent to the manned control center."

Similarly, it would be acceptable to use a combination of a global statement and a device-level list of exclusions. Example:

> "Except as noted below, all substation dc supply battery chargers are considered monitored and subject to the rows for monitored equipment of Table 1-4 requirements, as all substation dc supply battery chargers are equipped with dc voltage alarms and ground detection alarms that are sent to the manned control center. The dc supply battery chargers of Substation X, Substation Y, and Substation Z are considered unmonitored and subject to the rows for unmonitored equipment in Table 1-4 requirements, as they are not equipped with ground detection capability."

Regardless whether this documentation is provided by device listing of monitoring attributes, by global statements of the monitoring attributes of an entire population of component types, or by some combination of these methods, it should be noted that auditors may request supporting drawings or other documentation necessary to validate the inclusion of the device(s) within the appropriate level of monitoring. This supporting background information need not be maintained within the program document structure, but should be retrievable if requested by an auditor.

7. Time-Based Versus Condition-Based Maintenance

Time-based and condition-based (or monitored) maintenance programs are both acceptable, if implemented according to technically sound requirements. Practical programs can employ a *combination of time-based and condition-based maintenance.* The standard requirements introduce the concept of optionally using condition monitoring as a documented element of a maintenance program.

The Federal Energy Regulatory Commission (FERC), in its Order Number 693 Final Rule, dated March 16, 2007 (18 CFR Part 40, Docket No. RM06-16-000) on Mandatory Reliability Standards for the Bulk-Power System, directed NERC to submit a modification to PRC-005-1 that includes a requirement that maintenance and testing of a Protection System must be carried out within a maximum allowable interval that is appropriate to the type of the Protection System and its impact on the reliability of the Bulk Power System. Accordingly, this Supplementary Reference Paper refers to the specific maximum allowable intervals in PRC-005-2. The defined time limits allow for longer time intervals if the maintained component is monitored.

A key feature of condition-based monitoring is that it effectively reduces the time delay between the moment of a protection failure and time the Protection System owner knows about it, for the monitored segments of the Protection System. In some cases, the verification is practically continuous - the time interval between verifications is minutes or seconds. Thus, technically sound, condition-based verification, meets the verification requirements of the FERC order even more effectively than the strictly time-based tests of the same system components.

The result is that:

This NERC standard permits utilities to use a technically sound approach and to take advantage of remote monitoring, data analysis, and control capabilities of modern Protection Systems to reduce the need for periodic site visits and invasive testing of components by on-site technicians. This periodic testing must be conducted within the maximum time intervals specified in Tables 1-1 through 1-5 and Table 2 of PRC-005-2.

7.1 Frequently Asked Questions:

What is a Calendar Year?

Calendar Year - January 1 through December 31 of any year. As an example, if an event occurred on June 17, 2009 and is on a “One Calendar Year Interval,” the next event would have to occur on or before December 31, 2010.

Please provide an example of “4 Calendar Months”.

If a maintenance activity is described as being needed every four Calendar Months then it is performed in a (given) month and due again four months later. For example a battery bank is inspected in month number 1 then it is due again before the end of the month number5. And specifically consider that you perform your battery inspection on January 3, 2010 then it must be inspected again before the end of May. Another example could be that a four-month inspection was performed in January is due in May, but if performed in March (instead of May)

would still be due four months later therefore the activity is due again July. Basically every "four Calendar Months" means to add four months from the last time the activity was performed.

Please provide an example of the unmonitored versus other levels of monitoring available?

An unmonitored Protection System has no monitoring and alarm circuits on the Protection System components. A Protection System component that has monitoring attributes but no alarm output connected is considered to be unmonitored.

A monitored Protection System or an individual monitored component of a Protection System has monitoring and alarm circuits on the Protection System components. The alarm circuits must alert, within 24 hours, a location wherein corrective action can be initiated. This location might be, but is not limited to, an Operations Center, Dispatch Office, Maintenance Center or even a portable SCADA system.

There can be a combination of monitored and unmonitored Protection Systems within any given scheme, substation or plant; there can also be a combination of monitored and unmonitored components within any given Protection System.

Example #1: A combination of monitored and unmonitored components within a given Protection System might be:

- A microprocessor relay with an internal alarm connected to SCADA to alert 24-hr staffed operations center; it has internal self diagnosis and alarming. (monitored)
- Instrumentation transformers, with no monitoring, connected as inputs to that relay. (unmonitored)
- A vented Lead-Acid battery with a low voltage alarm for the station dc supply voltage and an unintentional grounds detection alarm connected to SCADA. (monitoring varies)
- A circuit breaker with a trip coil, and the trip circuit is not monitored. (unmonitored)

Given the particular components and conditions, and using Table 1 and Table 2, the particular components have maximum activity intervals of:

Every four calendar months, inspect:

- Electrolyte level (station dc supply voltage and unintentional ground detection is being maintained more frequently by the monitoring system).

Every 18 calendar months, verify/inspect the following:

- Battery bank ohmic values to station battery baseline (if performance tests are not opted)
- Battery charger float voltage
- Battery rack integrity
- Cell condition of all individual battery cells (where visible)
- Battery continuity
- Battery terminal connection resistance
- Battery cell-to-cell resistance (where available to measure)

Every six calendar years, perform/verify the following:

- Battery performance test (if internal ohmic tests or **other measurements indicative of battery performance** are not opted)
- Verify that each trip coil is able to operate the circuit breaker, interrupting device, or mitigating device
- For electromechanical lock-out relays, electrical operation of electromechanical trip

Every 12 calendar years, verify the following:

- Microprocessor relay settings are as specified
- Operation of the microprocessor's relay inputs and outputs that are essential to proper functioning of the Protection System
- Acceptable measurement of power System input values seen by the microprocessor protective relay
- Verify that current and voltage signal values are provided to the protective relays
- Protection System component monitoring for the battery system signals are conveyed to a location where corrective action can be initiated
- The microprocessor relay alarm signals are conveyed to a location where corrective action can be initiated
- Verify all trip paths in the control circuitry associated with protective functions through the trip coil(s) of the circuit breakers or other interrupting devices
- Auxiliary outputs that are in the trip path shall be maintained as detailed in Table 1-5 of the standard under the 'Unmonitored Control Circuitry Associated with Protective Functions" section'
- Auxiliary outputs not in a trip path (i.e., annunciation or DME input) are not required, by this standard, to be checked

Example #2: A combination of monitored and unmonitored components within a given Protection System might be:

- A microprocessor relay with integral alarm that is not connected to SCADA. (unmonitored)
- Current and voltage signal values, with no monitoring, connected as inputs to that relay. (unmonitored)
- A vented lead-acid battery with a low voltage alarm for the station dc supply voltage and an unintentional grounds detection alarm connected to SCADA. (monitoring varies)
- A circuit breaker with a trip coil, with no circuits monitored. (unmonitored)

Given the particular components and conditions, and using the Table 1 (Maximum Allowable Testing Intervals and Maintenance Activities) and Table 2 (Alarming Paths and Monitoring), the particular components have maximum activity intervals of:

Every four calendar months, inspect:

- Electrolyte level (station dc supply voltage and unintentional ground detection is being maintained more frequently by the monitoring system)

Every 18 calendar months, verify/inspect the following:

- Battery bank **trending of** ohmic values **or other measurements indicative of battery performance** to station battery baseline (if performance tests are not opted)
- Battery charger float voltage
- Battery rack integrity
- Cell condition of all individual battery cells (where visible)
- Battery continuity
- Battery terminal connection resistance
- Battery cell-to-cell resistance (where available to measure)

Every six calendar years, verify/perform the following:

- Verify operation of the relay inputs and outputs that are essential to proper functioning of the Protection System
- Verify acceptable measurement of power system input values as seen by the relays
- Verify that each trip coil is able to operate the circuit breaker, interrupting device, or mitigating device
- For electromechanical lock-out relays, electrical operation of electromechanical trip
- Battery performance test (if internal ohmic tests are not opted)

Every 12 calendar years, verify the following:

- Current and voltage signal values are provided to the protective relays
- Protection System component monitoring for the battery system signals are conveyed to a location where corrective action can be initiated
- All trip paths in the control circuitry associated with protective functions through the trip coil(s) of the circuit breakers or other interrupting devices
- Auxiliary outputs that are in the trip path shall be maintained, as detailed in Table 1-5 of the standard under the Unmonitored Control Circuitry Associated with Protective Functions" section
- Auxiliary outputs not in a trip path (i.e., annunciation or DME input) are not required, by this standard, to be checked

Example #3: A combination of monitored and unmonitored components within a given Protection System might be:

- A microprocessor relay with alarm connected to SCADA to alert 24-hr staffed operations center; it has internal self diagnosis and alarms. (monitored)
- Current and voltage signal values, with monitoring, connected as inputs to that relay (monitored)

- Vented Lead-Acid battery without any alarms connected to SCADA (unmonitored)
- Circuit breaker with a trip coil, with no circuits monitored (unmonitored)

Given the particular components, conditions, and using the Table 1 (Maximum Allowable Testing Intervals and Maintenance Activities) and Table 2 (Alarming Paths and Monitoring), the particular components shall have maximum activity intervals of:

Every four calendar months, verify/inspect the following:

- Station dc supply voltage
- For unintentional grounds
- Electrolyte level

Every 18 calendar months, verify/inspect the following:

- Battery bank trending of ohmic values other measurements indicative of battery performance to station battery baseline (if performance tests are not opted)
- Battery charger float voltage
- Battery rack integrity
- Battery continuity
- Battery terminal connection resistance
- Battery cell-to-cell resistance (where available to measure)
- Condition of all individual battery cells (where visible)

Every six calendar years, perform/verify the following:

- Battery performance test (if internal ohmic tests other measurements indicative of battery performance are not opted)
- Verify that each trip coil is able to operate the circuit breaker, interrupting device, or mitigating device
- For electromechanical lock-out relays, electrical operation of electromechanical trip

Every 12 calendar years, verify the following:

- The microprocessor relay alarm signals are conveyed to a location where corrective action can be taken
- Microprocessor relay settings are as specified
- Operation of the microprocessor's relay inputs and outputs that are essential to proper functioning of the Protection System
- Acceptable measurement of power system input values seen by the microprocessor protective relay
- Verify all trip paths in the control circuitry associated with protective functions through the trip coil(s) of the circuit breakers or other interrupting devices

- Auxiliary outputs that are in the trip path shall be maintained, as detailed in Table 1-5 of the standard under the Unmonitored Control Circuitry Associated with Protective Functions section
- Auxiliary outputs not in a trip path (i.e. annunciation or DME input) are not required, by this standard, to be checked

Why do components have different maintenance activities and intervals if they are monitored?

The intent behind different activities and intervals for monitored equipment is to allow less frequent manual intervention when more information is known about the condition of Protection System components. Condition-Based Maintenance is a valuable asset to improve reliability.

Can all components in a Protection System be monitored?

No. For some components in a Protection System, monitoring will not be relevant. For example, a battery will always need some kind of inspection.

We have a 30-year-old oil circuit breaker with a red indicating lamp on the substation relay panel that is illuminated only if there is continuity through the breaker trip coil. There is no SCADA monitor or relay monitor of this trip coil. The line protection relay package that trips this circuit breaker is a microprocessor relay that has an integral alarm relay that will assert on a number of conditions that includes a loss of power to the relay. This alarm contact connects to our SCADA system and alerts our 24-hour operations center of relay trouble when the alarm contact closes. This microprocessor relay trips the circuit breaker only and does not monitor trip coil continuity or other things such as trip current. Are the components monitored or not? How often must I perform maintenance?

The protective relay is monitored and can be maintained every 12 years, or when an Unresolved Maintenance Issue arises. The control circuitry can be maintained every 12 years. The circuit breaker trip coil(s) has to be electrically operated at least once every six years. ***What is a mitigating device?***

A mitigating device is the device that acts to respond as directed by a Special Protection System. It may be a breaker, valve, distributed control system, or any variety of other devices.

8. Maximum Allowable Verification Intervals

The maximum allowable testing intervals and maintenance activities show how CBM with newer device types can reduce the need for many of the tests and site visits that older Protection System components require. As explained below, there are some sections of the Protection System that monitoring or data analysis may not verify. Verifying these sections of the Protection Systems requires some persistent TBM activity in the maintenance program. However, some of this TBM can be carried out remotely - for example, exercising a circuit breaker through the relay tripping circuits using the relay remote control capabilities can be used to verify function of one tripping path and proper trip coil operation, if there has been no Fault or routine operation to demonstrate performance of relay tripping circuits.

8.1 Maintenance Tests

Periodic maintenance testing is performed to ensure that the protection and control system is operating correctly after a time period of field installation. These tests may be used to ensure that individual components are still operating within acceptable performance parameters - this type of test is needed for components susceptible to degraded or changing characteristics due to aging and wear. Full system performance tests may be used to confirm that the total Protection System functions from measurement of power system values, to properly identifying Fault characteristics, to the operation of the interrupting devices.

8.1.1 Table of Maximum Allowable Verification Intervals

Table 1 (collectively known as Table 1, individually called out as Tables 1-1 through 1-5), Table 2 and Table 3 in the standard specify maximum allowable verification intervals for various generations of Protection Systems and categories of equipment that comprise Protection Systems. The right column indicates maintenance activities required for each category.

The types of components are illustrated in Figures 1 and 2 at the end of this paper. Figure 1 shows an example of telecommunications-assisted transmission Protection System comprising substation equipment at each terminal and a telecommunications channel for relaying between the two substations. Figure 2 shows an example of a generation Protection System. The various sub-systems of a Protection System that need to be verified are shown.

Non-distributed UFLS, UVLS, and SPS are additional categories of Table 1 that are not illustrated in these figures. Non-distributed UFLS, UVLS and SPS all use identical equipment as Protection Systems in the performance of their functions; and, therefore, have the same maintenance needs.

Distributed UFLS and UVLS Systems, which use local sensing on the distribution System and trip co-located non-BES interrupting devices, are addressed in Table 3 with reduced maintenance activities.

While it is easy to associate protective relays to multiple levels of monitoring, it is also true that most of the components that can make up a Protection System can also have technological advancements that place them into higher levels of monitoring.

To use the Maintenance Activities and Intervals Tables from PRC-005-2:

- First find the Table associated with your component. The tables are arranged in the order of mention in the definition of Protection System;

- Table 1-1 is for protective relays,
- Table 1-2 is for the associated communications systems,
- Table 1-3 is for current and voltage sensing devices,
- Table 1-4 is for station dc supply and
- Table 1-5 is for control circuits.
- Table 2, is for alarms; this was broken out to simplify the other tables.
- Table 3 is for components which make-up distributed UFLS and UVLS Systems.

- Next look within that table for your device and its degree of monitoring. The Tables have different hands-on maintenance activities prescribed depending upon the degree to which you monitor your equipment. Find the maintenance activity that applies to the monitoring level that you have on your piece of equipment.
- This Maintenance activity is the minimum maintenance activity that must be documented.
- If your Performance-Based Maintenance (PBM) plan requires more activities, then you must perform and document to this higher standard. (Note that this does not apply unless you utilize PBM.)
- After the maintenance activity is known, check the maximum maintenance interval; this time is the maximum time allowed between hands-on maintenance activity cycles of this component.
- If your Performance-Based Maintenance plan requires activities more often than the Tables maximum, then you must perform and document those activities to your more stringent standard. (Note that this does not apply unless you utilize PBM.)
- Any given component of a Protection System can be determined to have a degree of monitoring that may be different from another component within that same Protection System. For example, in a given Protection System it is possible for an entity to have a monitored protective relay and an unmonitored associated communications system; this combination would require hands-on maintenance activity on the relay at least once every 12 years and attention paid to the communications system as often as every four months.
- An entity does not have to utilize the extended time intervals made available by this use of condition-based monitoring. An easy choice to make is to simply utilize the unmonitored level of maintenance made available on each of the five Tables. While the maintenance activities resulting from this choice would require more maintenance man-hours, the maintenance requirements may be simpler to document and the resulting maintenance plans may be easier to create.

For each Protection System component, Table 1 shows maximum allowable testing intervals for the various degrees of monitoring. These degrees of monitoring, or levels, range from the legacy unmonitored through a system that is more comprehensively monitored.

It has been noted here that an entity may have a PSMP that is more stringent than PRC-005-2. There may be any number of reasons that an entity chooses a more stringent plan than the

minimums prescribed within PRC-005-2, most notable of which is an entity using performance based maintenance methodology. If an entity has a Performance-Based Maintenance program, then that plan must be followed, even if the plan proves to be more stringent than the minimums laid out in the Tables.

8.1.2 Additional Notes for Tables 1-1 through 1-5 and Table 3

1. For electromechanical relays, adjustment is required to bring measurement accuracy within the tolerance needed by the asset owner. Microprocessor relays with no remote monitoring of alarm contacts, etc, are unmonitored relays and need to be verified within the Table interval as other unmonitored relays but may be verified as functional by means other than testing by simulated inputs.

2. Microprocessor relays typically are specified by manufacturers as not requiring calibration, but acceptable measurement of power system input values must be verified (verification of the Analog to Digital [A/D] converters) within the Table intervals. The integrity of the digital inputs and outputs that are used as protective functions must be verified within the Table intervals.

3. Any Phasor Measurement Unit (PMU) function whose output is used in a Protection System or SPS (as opposed to a monitoring task) must be verified as a component in a Protection System.

4. In addition to verifying the circuitry that supplies dc to the Protection System, the owner must maintain the station dc supply. The most widespread station dc supply is the station battery and charger. Unlike most Protection System components, physical inspection of station batteries for signs of component failure, reduced performance, and degradation are required to ensure that the station battery is reliable enough to deliver dc power when required. IEEE Standards 450, 1188, and 1106 for vented lead-acid, valve-regulated lead-acid, and nickel-cadmium batteries, respectively (which are the most commonly used substation batteries on the NERC BES) have been developed as an important reference source of maintenance recommendations. The Protection System owner might want to follow the guidelines in the applicable IEEE recommended practices for battery maintenance and testing. However, the committee has tailored the battery maintenance and testing guidelines in PRC-005-2 for the Protection System owner which are application specific for the BES Facilities. While the IEEE recommendations are all encompassing, PRC-005-2 is a more economical approach while addressing the reliability requirements of the BES.

5. Aggregated small entities might distribute the testing of the population of UFLS/UVLS systems, and large entities will usually maintain a portion of these systems in any given year. Additionally, if relatively small quantities of such systems do not perform properly, it will not affect the integrity of the overall program. Thus, these distributed systems have decreased requirements as compared to other Protection Systems.

6. Voltage & Current Sensing Device circuit input connections to the Protection System relays can be verified by (but not limited to) comparison of measured values on live circuits or by using test currents and voltages on equipment out of service for maintenance. The verification process can be automated or manual. The values should be verified to be as expected (phase value and phase relationships are both equally important to verify).

7. "End-to-end test," as used in this Supplementary Reference, is any testing procedure that creates a remote input to the local communications-assisted trip scheme. While this can be interpreted as a GPS-type functional test, it is not limited to testing via GPS. Any remote scheme manipulation that can cause action at the local trip path can be used to functionally-test the dc control circuitry. A documented Real-time trip of any given trip path is acceptable in lieu of a functional trip test. It is possible, with sufficient monitoring, to be able to verify each and every parallel trip path that participated in any given dc Control Circuit trip. Or another possible solution is that a single trip path from a single monitored relay can be verified to be the trip path that successfully tripped during a Real-time operation. The variations are only limited by the degree of engineering and monitoring that an entity desires to pursue.
8. A/D verification may use relay front panel value displays, or values gathered via data communications. Groupings of other measurements (such as vector summation of bus feeder currents) can be used for comparison if calibration requirements assure acceptable measurement of power system input values.
9. Notes 1-8 attempt to describe some testing activities; they do not represent the only methods to achieve these activities, but rather some possible methods. Technological advances, ingenuity and/or industry accepted techniques can all be used to satisfy maintenance activity requirements; the standard is technology- and method-neutral in most cases.

8.1.3 Frequently Asked Questions:

What is meant by "Verify that settings are as specified" maintenance activity in Table 1-1?

Verification of settings is an activity directed mostly towards microprocessor- based relays. For relay maintenance departments that choose to test microprocessor-based relays in the same manner as electromechanical relays are tested, the testing process sometimes requires that some specific functions be disabled. Later tests might enable the functions previously disabled, but perhaps still other functions or logic statements were then masked out. It is imperative that, when the relay is placed into service, the settings in the relay be the settings that were intended to be in that relay or as the standard states "…settings are as specified."

Many of the microprocessor- based relays available today have software tools which provide this functionality and generate reports for this purpose.

For evidence or documentation of this requirement, a simple recorded acknowledgement that the settings were checked to be as specified is sufficient.

The drafting team was careful not to require "…that the relay settings be correct…" because it was believed that this might then place a burden of proof that the specified settings would result in the correct intended operation of the interrupting device. While that is a noble intention, the measurable proof of such a requirement is immense. The intent is that settings of the component be as specified at the conclusion of maintenance activities, whether those settings may have "drifted" since the prior maintenance or whether changes were made as part of the testing process.

Are electromechanical relays included in the "Verify that settings are as specified" maintenance activity in Table 1-1?

Verification of settings is an activity directed towards the application of protection related functions of microprocessor based relays. Electromechanical relays require calibration verification by voltage and/or current injection; and, thus, the settings are verified during calibration activity. In the example of a time-overcurrent relay, a minor deviation in time dial, versus the settings, may be acceptable, as long as the relay calibration is within accepted tolerances at the injected current amplitudes. A major deviation may require further investigation, as it could indicate a problem with the relay or an incorrect relay style for the application.

The verification of phase current and voltage measurements by comparison to other quantities seems reasonable. How, though, can I verify residual or neutral currents, or 3V0 voltages, by comparison, when my system is closely balanced?

Since these inputs are verified at commissioning, maintenance verification requires ensuring that phase quantities are as expected and that 3IO and 3VO quantities appear equal to or close to 0.

These quantities also may be verified by use of oscillographic records for connected microprocessor relays as recorded during system Disturbances. Such records may compare to similar values recorded at other locations by other microprocessor relays for the same event, or compared to expected values (from short circuit studies) for known Fault locations.

What does this Standard require for testing an auxiliary tripping relay?

Table 1 and Table 3 requires that a trip test must verify that the auxiliary tripping relay(s) and/or lockout relay(s) which are directly in a trip path from the protective relay to the interrupting device trip coil operate(s) electrically. Auxiliary outputs not in a trip path (i.e. annunciation or DME input) are not required, by this standard, to be checked.

Do I have to perform a full end-to-end test of a Special Protection System?

No. All portions of the SPS need to be maintained, and the portions must overlap, but the overall SPS does not need to have a single end-to-end test. In other words it may be tested in piecemeal fashion provided all of the pieces are verified.

What about SPS interfaces between different entities or owners?

As in all of the Protection System requirements, SPS segments can be tested individually, thus minimizing the need to accommodate complex maintenance schedules.

What do I have to do if I am using a phasor measurement unit (PMU) as part of a Protection System or Special Protection System?

Any Phasor Measurement Unit (PMU) function whose output is used in a Protection System or Special Protection System (as opposed to a monitoring task) must be verified as a component in a Protection System.

How do I maintain a Special Protection System or relay sensing for non-distributed UFLS or UVLS Systems?

Since components of the SPS, UFLS and UVLS are the same types of components as those in Protection Systems, then these components should be maintained like similar components used for other Protection System functions. In many cases the devices for SPS, UFLS and UVLS are also used for other protective functions. The same maintenance activities apply with the

exception that distributed systems (UFLS and UVLS) have fewer dc supply and control circuitry maintenance activity requirements.

For the testing of the output action, verification may be by breaker tripping, but may be verified in overlapping segments. For example, an SPS that trips a remote circuit breaker might be tested by testing the various parts of the scheme in overlapping segments. Another method is to document the Real-time tripping of an SPS scheme should that occur. Forced trip tests of circuit breakers (etc) that are a part of distributed UFLS or UVLS schemes are not required.

The established maximum allowable intervals do not align well with the scheduled outages for my power plant. Can I extend the maintenance to the next scheduled outage following the established maximum interval?

No. You must complete your maintenance within the established maximum allowable intervals in order to be compliant. You will need to schedule your maintenance during available outages to complete your maintenance as required, even if it means that you may do protective relay maintenance more frequently than the maximum allowable intervals. The maintenance intervals were selected with typical plant outages, among other things, in mind.

If I am unable to complete the maintenance, as required, due to a major natural disaster (hurricane, earthquake, etc.), how will this affect my compliance with this standard?

The Sanction Guidelines of the North American Electric Reliability Corporation, effective January 15, 2008, provides that the Compliance Monitor will consider extenuating circumstances when considering any sanctions.

What if my observed testing results show a high incidence of out-of-tolerance relays; or, even worse, I am experiencing numerous relay Misoperations due to the relays being out-of-tolerance?

The established maximum time intervals are mandatory only as a not-to-exceed limitation. The establishment of a maximum is measurable. But any entity can choose to test some or all of their Protection System components more frequently (or to express it differently, exceed the minimum requirements of the standard). Particularly if you find that the maximum intervals in the standard do not achieve your expected level of performance, it is understandable that you would maintain the related equipment more frequently. A high incidence of relay Misoperations is in no one's best interest.

We believe that the four-month interval between inspections is unneccessary. Why can we not perform these inspections twice per year?

The Standard Drafting Team, through the comment process, has discovered that routine monthly inspections are not the norm. To align routine station inspections with other important inspections, the four-month interval was chosen. In lieu of station visits, many activities can be accomplished with automated monitoring and alarming.

Our maintenance plan calls for us to perform routine protective relay tests every 3 years. If we are unable to achieve this schedule, but we are able to complete the procedures in less than the maximum time interval ,then are we in or out of compliance?

According to R3, if you have a time-based maintenance program, then you will be in violation of the standard only if you exceed the maximum maintenance intervals prescribed in the Tables.

According to R4, if your device in question is part of a Performance-Based Maintenance program, then you will be in violation of the standard if you fail to meet your PSMP, even if you do not exceed the maximum maintenance intervals prescribed in the Tables. The intervals in the Tables are associated with TBM and CBM; Attachment A is associated with PBM.

Please provide a sample list of devices or systems that must be verified in a generator, generator step-up transformer, generator connected station service or generator connected excitation transformer to meet the requirements of this maintenance standard.

Examples of typical devices and systems that may directly trip the generator, or trip through a lockout relay, may include, but are not necessarily limited to:

- Fault protective functions, including distance functions, voltage-restrained overcurrent functions, or voltage-controlled overcurrent functions
- Loss-of-field relays
- Volts-per-hertz relays
- Negative sequence overcurrent relays
- Over voltage and under voltage protection relays
- Stator-ground relays
- Communications-based Protection Systems such as transfer-trip systems
- Generator differential relays
- Reverse power relays
- Frequency relays
- Out-of-step relays
- Inadvertent energization protection
- Breaker failure protection

For generator step-up, generator-connected station service transformers, or generator connected excitation transformers, operation of any of the following associated protective relays frequently would result in a trip of the generating unit; and, as such, would be included in the program:

- Transformer differential relays
- Neutral overcurrent relay
- Phase overcurrent relays

Relays which trip breakers serving station auxiliary Loads such as pumps, fans, or fuel handling equipment, etc., need not be included in the program, even if the loss of the those Loads could result in a trip of the generating unit. Furthermore, relays which provide protection to secondary unit substation (SUS) or low switchgear transformers and relays protecting other downstream plant electrical distribution system components are not included in the scope of this program, even if a trip of these devices might eventually result in a trip of the generating

unit. For example, a thermal overcurrent trip on the motor of a coal-conveyor belt could eventually lead to the tripping of the generator, but it does not cause the trip.

In the case where a plant does not have a generator connected station service transformer such that it is normally fed from a system connected station service transformer, is it still the drafting team's intent to exclude the Protection Systems for these system connected auxiliary transformers from scope even when the loss of the normal (system connected) station service transformer will result in a trip of a BES generating Facility?

The SDT does not intend that the system-connected station service transformers be included in the Applicability. The generator-connected station service transformers and generator connected excitation transformers are often connected to the generator bus directly without an interposing breaker; thus, the Protection Systems on these transformers will trip the generator as discussed in 4.2.5.1.

What is meant by "verify operation of the relay inputs and outputs that are essential to proper functioning of the Protection System?"

Any input or output (of the relay) that "affects the tripping" of the breaker is included in the scope of I/O of the relay to be verified. By "affects the tripping," one needs to realize that sometimes there are more inputs and outputs than simply the output to the trip coil. Many important protective functions include things like breaker fail initiation, zone timer initiation and sometimes even 52a/b contact inputs are needed for a protective relay to correctly operate.

Each input should be "picked up" or "turned on and off" and verified as changing state by the microprocessor of the relay. Each output should be "operated" or "closed and opened" from the microprocessor of the relay and the output should be verified to change state on the output terminals of the relay. One possible method of testing inputs of these relays is to "jumper" the needed dc voltage to the input and verify that the relay registered the change of state.

Electromechanical lock-out relays (86) (used to convey the tripping current to the trip coils) need to be electrically operated to prove the capability of the device to change state. These tests need to be accomplished at least every six years, unless PBM methodology is applied.

The contacts on the 86 or auxiliary tripping relays (94) that change state to pass on the trip current to a breaker trip coil need only be checked every 12 years with the control circuitry.

What is the difference between a distributed UFLS/UVLS and a non-distributed UFLS/UVLS scheme?

A distributed UFLS or UVLS scheme contains individual relays which make independent Load shed decisions based on applied settings and localized voltage and/or current inputs. A distributed scheme may involve an enable/disable contact in the scheme and still be considered a distributed scheme. A non-distributed UFLS or UVLS scheme involves a system where there is some type of centralized measurement and Load shed decision being made. A non-distributed UFLS/UVLS scheme is considered similar to an SPS scheme and falls under Table 1 for maintenance activities and intervals.

8.2 Retention of Records

PRC-005-1 describes a reporting or auditing cycle of one year and retention of records for three years. However, with a three-year retention cycle, the records of verification for a Protection

System might be discarded before the next verification, leaving no record of what was done if a Misoperation or failure is to be analyzed.

PRC-005-2 corrects this by requiring:

The Transmission Owner, Generator Owner, and Distribution Provider shall each retain documentation of the two most recent performances of each distinct maintenance activity for the Protection System components, or to the previous scheduled (on-site) audit date, whichever is longer.

This requirement assures that the documentation shows that the interval between maintenance cycles correctly meets the maintenance interval limits. The requirement is actually alerting the industry to documentation requirements already implemented by audit teams. Evidence of compliance bookending the interval shows interval accomplished instead of proving only your planned interval.

The SDT is aware that, in some cases, the retention period could be relatively long. But, the retention of documents simply helps to demonstrate compliance.

8.2.1 Frequently Asked Questions:

Please use a specific example to demonstrate the data retention requirements.

The data retention requirements are intended to allow the availability of maintenance records to demonstrate that the time intervals in your maintenance plan were upheld. For example: "Company A" has a maintenance plan that requires its electromechanical protective relays be tested every three calendar years, with a maximum allowed grace period of an additional 18 months. This entity would be required to maintain its records of maintenance of its last two routine scheduled tests. Thus, its test records would have a latest routine test, as well as its previous routine test. The interval between tests is, therefore, provable to an auditor as being within "Company A's" stated maximum time interval of 4.5 years.

The intent is not to require three test results proving two time intervals, but rather have two test results proving the last interval. The drafting team contends that this minimizes storage requirements, while still having minimum data available to demonstrate compliance with time intervals.

If an entity prefers to utilize Performance-Based Maintenance, then statistical data may well be retained for extended periods to assist with future adjustments in time intervals.

If an equipment item is replaced, then the entity can restart the maintenance-time-interval-clock if desired; however, the replacement of equipment does not remove any documentation requirements that would have been required to verify compliance with time-interval requirements. In other words, do not discard maintenance data that goes to verify your work.

The retention of documentation for new and/or replaced equipment is all about proving that the maintenance intervals had been in compliance. For example, a long-range plan of upgrades might lead an entity to ignore required maintenance; retaining the evidence of prior maintenance that existed before any retirements and upgrades proves compliance with the standard.

What does this Maintenance Standard say about commissioning? Is it necessary to have documentation in your maintenance history of the completion of commission testing?

This standard does not establish requirements for commission testing. Commission testing includes all testing activities necessary to conclude that a Facility has been built in accordance with design. While a thorough commission testing program would include, either directly or indirectly, the verification of all those Protection System attributes addressed by the maintenance activities specified in the Tables of PRC-005-2, verification of the adequacy of initial installation necessitates the performance of testing and inspections that go well beyond these routine maintenance activities. For example, commission testing might set baselines for future tests; perform acceptance tests and/or warranty tests; utilize testing methods that are not generally done routinely like staged-Fault-tests.

However, many of the Protection System attributes which are verified during commission testing are not subject to age related or service related degradation, and need not be re-verified within an ongoing maintenance program. Example – it is not necessary to re-verify correct terminal strip wiring on an ongoing basis.

PRC-005-2 assumes that thorough commission testing was performed prior to a Protection System being placed in service. PRC-005-2 requires performance of maintenance activities that are deemed necessary to detect and correct plausible age and service related degradation of components, such that a properly built and commission tested Protection System will continue to function as designed over its service life.

It should be noted that commission testing frequently is performed by a different organization than that which is responsible for the ongoing maintenance of the Protection System. Furthermore, the commission testing activities will not necessarily correlate directly with the maintenance activities required by the standard. As such, it is very likely that commission testing records will deviate significantly from maintenance records in both form and content; and, therefore, it is not necessary to maintain commission testing records within the maintenance program documentation.

Notwithstanding the differences in records, an entity would be wise to retain commissioning records to show a maintenance start date. (See below). An entity that requires that their commissioning tests have, at a minimum, the requirements of PRC-005-2 would help that entity prove time interval maximums by setting the initial time clock.

How do you determine the initial due date for maintenance?

The initial due date for maintenance should be based upon when a Protection System was tested. Alternatively, an entity may choose to use the date of completion of the commission testing of the Protection System component and the system was placed into service as the starting point in determining its first maintenance due dates. Whichever method is chosen, for newly installed Protection Systems the components should not be placed into service until minimum maintenance activities have taken place.

It is conceivable that there can be a (substantial) difference in time between the date of testing, as compared to the date placed into service. The use of the “Calendar Year” language can help determine the next due date without too much concern about being non-compliant for missing test dates by a small amount (provided your dates are not already at the end of a year). However, if there is a substantial amount of time difference between testing and in-service dates, then the testing date should be followed because it is the degradation of components that is the concern. While accuracy fluctuations may decrease when components are not

energized, there are cases when degradation can take place, even though the device is not energized. Minimizing the time between commissioning tests and in-service dates will help.

If I miss two battery inspections four times out of 100 Protection System components on my transmission system, does that count as 2% or 8% when counting Violation Severity Level (VSL) for R3?

The entity failed to complete its scheduled program on two of its 100 Protection System components, which would equate to 2% for application to the VSL Table for Requirement R3. This VSL is written to compare missed components to total components. In this case two components out of 100 were missed, or 2%.

How do I achieve a "grace period" without being out of compliance?

The objective here is to create a time extension within your own PSMP that still does not violate the maximum time intervals stated in the standard. Remember that the maximum time intervals listed in the Tables cannot be extended.

For the purposes of this example, concentrating on just unmonitored protective relays – Table 1-1 specifies a maximum time interval (between the mandated maintenance activities) of six calendar years. Your plan must ensure that your unmonitored relays are tested at least once every six calendar years. You could, within your PSMP, require that your unmonitored relays be tested every four calendar years, with a maximum allowable time extension of 18 calendar months. This allows an entity to have deadlines set for the auto-generation of work orders, but still has the flexibility in scheduling complex work schedules. This also allows for that 18 calendar months to act as a buffer, in effect a grace period within your PSMP, in the event of unforeseen events. You will note that this example of a maintenance plan interval has a planned time of four years; it also has a built-in time extension allowed within the PSMP, and yet does not exceed the maximum time interval allowed by the standard. So while there are no time extensions allowed beyond the standard, an entity can still have substantial flexibility to maintain their Protection System components.

8.3 Basis for Table 1 Intervals

When developing the original *Protection System Maintenance – A Technical Reference* in 2007, the SPCTF collected all available data from Regional Entities (REs) on time intervals recommended for maintenance and test programs. The recommendations vary widely in categorization of relays, defined maintenance actions, and time intervals, precluding development of intervals by averaging. The SPCTF also reviewed the 2005 Report [2] of the IEEE Power System Relaying Committee Working Group I-17 (Transmission Relay System Performance Comparison). Review of the I-17 report shows data from a small number of utilities, with no company identification or means of investigating the significance of particular results.

To develop a solid current base of practice, the SPCTF surveyed its members regarding their maintenance intervals for electromechanical and microprocessor relays, and asked the members to also provide definitively-known data for other entities. The survey represented 470 GW of peak Load, or 4% of the NERC peak Load. Maintenance interval averages were compiled by weighting reported intervals according to the size (based on peak Load) of the reporting utility. Thus, the averages more accurately represent practices for the large populations of Protection Systems used across the NERC regions.

The results of this survey with weighted averaging indicate maintenance intervals of five years for electromechanical or solid state relays, and seven years for unmonitored microprocessor relays.

A number of utilities have extended maintenance intervals for microprocessor relays beyond seven years, based on favorable experience with the particular products they have installed. To provide a technical basis for such extension, the SPCTF authors developed a recommendation of 10 years using the Markov modeling approach from [1], as summarized in Section 8.4. The results of this modeling depend on the completeness of self-testing or monitoring. Accordingly, this extended interval is allowed by Table 1, only when such relays are monitored as specified in the attributes of monitoring contained in Tables 1-1 through 1-5 and Table 2. Monitoring is capable of reporting Protection System health issues that are likely to affect performance within the 10 year time interval between verifications.

It is important to note that, according to modeling results, Protection System availability barely changes as the maintenance interval is varied below the 10-year mark. Thus, reducing the maintenance interval does not improve Protection System availability. With the assumptions of the model regarding how maintenance is carried out, reducing the maintenance interval actually degrades Protection System availability.

8.4 Basis for Extended Maintenance Intervals for Microprocessor Relays

Table 1 allows maximum verification intervals that are extended based on monitoring level. The industry has experience with self-monitoring microprocessor relays that leads to the Table 1 value for a monitored relay, as explained in Section 8.3. To develop a basis for the maximum interval for monitored relays in their *Protection System Maintenance – A Technical Reference*, the SPCTF used the methodology of Reference [1], which specifically addresses optimum routine maintenance intervals. The Markov modeling approach of [1] is judged to be valid for the design and typical failure modes of microprocessor relays.

The SPCTF authors ran test cases of the Markov model to calculate two key probability measures:

- Relay Unavailability - the probability that the relay is out of service due to failure or maintenance activity while the power system Element to be protected is in service.
- Abnormal Unavailability - the probability that the relay is out of service due to failure or maintenance activity when a Fault occurs, leading to failure to operate for the Fault.

The parameter in the Markov model that defines self-monitoring capability is ST (for self test). ST = 0 if there is no self-monitoring; ST = 1 for full monitoring. Practical ST values are estimated to range from .75 to .95. The SPCTF simulation runs used constants in the Markov model that were the same as those used in [1] with the following exceptions:

Sn, Normal tripping operations per hour = 21600 (reciprocal of normal Fault clearing time of 10 cycles)

Sb, Backup tripping operations per hour = 4320 (reciprocal of backup Fault clearing time of 50 cycles)

Rc, Protected component repairs per hour = 0.125 (8 hours to restore the power system)

Rt, Relay routine tests per hour = 0.125 (8 hours to test a Protection System)

Rr, Relay repairs per hour = 0.08333 (12 hours to complete a Protection System repair after failure)

Experimental runs of the model showed low sensitivity of optimum maintenance interval to these parameter adjustments.

The resulting curves for relay unavailability and abnormal unavailability versus maintenance interval showed a broad minimum (optimum maintenance interval) in the vicinity of 10 years – the curve is flat, with no significant change in either unavailability value over the range of 9, 10, or 11 years. This was true even for a relay mean time between Failures (MTBF) of 50 years, much lower than MTBF values typically published for these relays. Also, the Markov modeling indicates that both the relay unavailability and abnormal unavailability actually become higher with more frequent testing. This shows that the time spent on these more frequent tests yields no failure discoveries that approach the negative impact of removing the relays from service and running the tests.

The PSMT SDT discussed the practical need for "time-interval extensions" or "grace periods" to allow for scheduling problems that resulted from any number of business contingencies. The time interval discussions also focused on the need to reflect industry norms surrounding Generator outage frequencies. Finally, it was again noted that FERC Order 693 demanded maximum time intervals. "Maximum time intervals" by their very term negates any "time-interval extension" or "grace periods." To recognize the need to follow industry norms on Generator outage frequencies and accommodate a form of time-interval extension, while still following FERC Order 693, the Standard Drafting Team arrived at a six-year interval for the electromechanical relay, instead of the five-year interval arrived at by the SPCTF. The PSMT SDT has followed the FERC directive for a *maximum* time interval and has determined that no extensions will be allowed. Six years has been set for the maximum time interval between manual maintenance activities. This maximum time interval also works well for maintenance cycles that have been in use in generator plants for decades.

For monitored relays, the PSMT SDT notes that the SPCTF called for 10 years as the interval between maintenance activities. This 10-year interval was chosen, even though there was "…no significant change in unavailability value over the range of 9, 10, or 11 years. This was true even for a relay Mean Time between Failures (MTBF) of 50 years…" The Standard Drafting Team again sought to align maintenance activities with known successful practices and outage schedules. The Standard does not allow extensions on any component of the Protection System; thus, the maximum allowed interval for these components has been set to 12 years. Twelve years also fits well into the traditional maintenance cycles of both substations and generator plants.

Also of note is the Table's use of the term "Calendar" in the column for "Maximum Maintenance Interval." The PSMT SDT deemed it necessary to include the term "Calendar" to facilitate annual maintenance planning, scheduling and implementation. This need is the result of known occurrences of system requirements that could cause maintenance schedules to be missed by a few days or weeks. The PSMT SDT chose the term "Calendar" to preclude the need to have schedules be met to the day. An electromechanical protective relay that is maintained in year number one need not be revisited until six years later (year number seven). For example, a relay was maintained April 10, 2008; maintenance would need to be completed no later than December 31, 2014.

Though not a requirement of this standard, to stay in line with many Compliance Enforcement Agencies audit processes an entity should define, within their own PSMP, the entity's use of terms like annual, calendar year, etc. Then, once this is within the PSMP, the entity should abide by their chosen language.

9. Performance-Based Maintenance Process

In lieu of using the Table 1 intervals, a Performance-Based Maintenance process may be used to establish maintenance intervals (*PRC-005 Attachment A Criteria for a Performance-Based Protection System Maintenance Program*). A Performance-Based Maintenance process may justify longer maintenance intervals, or require shorter intervals relative to Table 1. In order to use a Performance-Based Maintenance process, the documented maintenance program must include records of repairs, adjustments, and corrections to covered Protection Systems in order to provide historical justification for intervals, other than those established in Table 1. Furthermore, the asset owner must regularly analyze these records of corrective actions to develop a ranking of causes. Recurrent problems are to be highlighted, and remedial action plans are to be documented to mitigate or eliminate recurrent problems.

Entities with Performance-Based Maintenance track performance of Protection Systems, demonstrate how they analyze findings of performance failures and aberrations, and implement continuous improvement actions. Since no maintenance program can ever guarantee that no malfunction can possibly occur, documentation of a Performance-Based Maintenance program would serve the utility well in explaining to regulators and the public a Misoperation leading to a major System outage event.

A Performance-Based Maintenance program requires auditing processes like those included in widely used industrial quality systems (such as ***ISO 9001-2000, Quality Management Systems — Requirements;*** or applicable parts of the NIST Baldridge National Quality Program). The audits periodically evaluate:

- The completeness of the documented maintenance process
- Organizational knowledge of and adherence to the process
- Performance metrics and documentation of results
- Remediation of issues
- Demonstration of continuous improvement.

In order to opt into a Performance-Based Maintenance (PBM) program, the asset owner must first sort the various Protection System components into population segments. Any population segment must be comprised of at least 60 individual units; if any asset owner opts for PBM, but does not own 60 units to comprise a population, then that asset owner may combine data from other asset owners until the needed 60 units is aggregated. Each population segment must be composed of a grouping of Protection Systems or components of a consistent design standard or particular model or type from a single manufacturer and subjected to similar environmental factors. For example: One segment cannot be comprised of both GE & Westinghouse electro-mechanical lock-out relays; likewise, one segment cannot be comprised of 60 GE lock-out relays, 30 of which are in a dirty environment, and the remaining 30 from a clean environment. This PBM process cannot be applied to batteries, but can be applied to all other components of a Protection System, including (but not limited to) specific battery chargers, instrument transformers, trip coils and/or control circuitry (etc.).

9.1 Minimum Sample Size

Large Sample Size

An assumption that needs to be made when choosing a sample size is "the sampling distribution of the sample mean can be approximated by a normal probability distribution." The Central Limit Theorem states: "In selecting simple random samples of size *n* from a population, the sampling distribution of the sample mean *x* can be approximated by a normal probability distribution as the sample size becomes large." (Essentials of Statistics for Business and Economics, Anderson, Sweeney, Williams, 2003.)

To use the Central Limit Theorem in statistics, the population size should be large. The references below are supplied to help define what is large.

> "… whenever we are using a large simple random sample (rule of thumb: n>=30), the central limit theorem enables us to conclude that the sampling distribution of the sample mean can be approximated by a normal distribution." (Essentials of Statistics for Business and Economics, Anderson, Sweeney, Williams, 2003.)
>
> "If samples of size n, when n>=30, are drawn from any population with a mean *u* and a standard deviation σ, the sampling distribution of sample means approximates a normal distribution. The greater the sample size, the better the approximation." (Elementary Statistics - Picturing the World, Larson, Farber, 2003.)
>
> "The sample size is large (generally n>=30)… (Introduction to Statistics and Data Analysis - Second Edition, Peck, Olson, Devore, 2005.)
>
> "… the normal is often used as an approximation to the *t* distribution in a test of a null hypothesis about the mean of a normally distributed population when the population variance is estimated from a relatively large sample. A sample size exceeding 30 is often given as a minimal size in this connection." (Statistical Analysis for Business Decisions, Peters, Summers, 1968.)

Error of Distribution Formula

Beyond the large sample size discussion above, a sample size requirement can be estimated using the bound on the Error of Distribution Formula when the expected result is of a "Pass/Fail" format and will be between 0 and 1.0.

The Error of Distribution Formula is:

$$B = z\sqrt{\frac{\pi(1-\pi)}{n}}$$

Where:

B = bound on the error of distribution (allowable error)

z = standard error

π = expected failure rate

n = sample size required

Solving for n provides:

$$n = \pi(1-\pi)\left(\frac{z}{B}\right)^2$$

Minimum Population Size to use Performance-Based Program

One entity's population of components should be large enough to represent a sizeable sample of a vendor's overall population of manufactured devices. For this reason, the following assumptions are made:

B = 5%

z = 1.96 (This equates to a 95% confidence level)

π = 4%

Using the equation above, n=59.0.

Minimum Sample Size to evaluate Performance-Based Program

The number of components that should be included in a sample size for evaluation of the appropriate testing interval can be smaller because a lower confidence level is acceptable since the sample testing is repeated or updated annually. For this reason, the following assumptions are made:

B = 5%

z = 1.44 (85% confidence level)

π = 4%

Using the equation above, n=31.8.

Recommendation

Based on the above discussion, a sample size should be at least 30 to allow use of the equation mentioned. Using this and the results of the equation, the following numbers are recommended (and required within the standard):

Minimum Population Size to use Performance-Based Maintenance Program = 60

Minimum Sample Size to evaluate Performance-Based Program = 30.

Once the population segment is defined, then maintenance must begin within the intervals as outlined for the device described in the Tables 1-1 through 1-5. Time intervals can be lengthened provided the last year's worth of components tested (or the last 30 units maintained, whichever is more) had fewer than 4%Countable Events. It is notable that 4% is specifically chosen because an entity with a small population (30 units) would have to adjust its time intervals between maintenance if more than one Countable Event was found to have occurred during the last analysis period. A smaller percentage would require that entity to adjust the time interval between maintenance activities if even one unit is found out of tolerance or causes a Misoperation.

The minimum number of units that can be tested in any given year is 5% of the population. Note that this 5% threshold sets a practical limitation on total length of time between intervals at 20 years.

If at any time the number of Countable Events equals or exceeds 4% of the last year's tested components (or the last 30 units maintained, whichever is more), then the time period between manual maintenance activities must be decreased. There is a time limit on reaching the decreased time at which the Countable Events is less than 4%; this must be attained within three years.

9.2 Frequently Asked Questions:

I'm a small entity and cannot aggregate a population of Protection System components to establish a segment required for a Performance-Based Protection System Maintenance Program. How can I utilize that opportunity?

Multiple asset owning entities may aggregate their individually owned populations of individual Protection System components to create a segment that crosses ownership boundaries. All entities participating in a joint program should have a single documented joint management process, with consistent Protection System Maintenance Programs (practices, maintenance intervals and criteria), for which the multiple owners are individually responsible with respect to the requirements of the Standard. The requirements established for Performance-Based Maintenance must be met for the overall aggregated program on an ongoing basis.

The aggregated population should reflect all factors that affect consistent performance across the population, including any relevant environmental factors such as geography, power-plant vs. substation, and weather conditions.

Can an owner go straight to a Performance-Based Maintenance program schedule, if they have previously gathered records?

Yes. An owner can go to a Performance-Based Maintenance program immediately. The owner will need to comply with the requirements of a Performance-Based Maintenance program as listed in the Standard. Gaps in the data collected will not be allowed; therefore, if an owner finds that a gap exists such that they cannot prove that they have collected the data as required for a Performance-Based Maintenance program then they will need to wait until they can prove compliance.

When establishing a Performance-Based Maintenance program, can I use test data from the device manufacturer, or industry survey results, as results to help establish a basis for my Performance-Based intervals?

No, you must use actual in-service test data for the components in the segment.

What types of Misoperations or events are not considered Countable Events in the Performance-Based Protection System Maintenance (PBM) Program?

Countable Events are intended to address conditions that are attributed to hardware failure or calibration failure; that is, conditions that reflect deteriorating performance of the component. These conditions include any condition where the device previously worked properly, then, due to changes within the device, malfunctioned or degraded to the point that re-calibration (to within the entity's tolerance) was required.

For this purpose of tracking hardware issues, human errors resulting in Protection System Misoperations during system installation or maintenance activities are not considered Countable Events. Examples of excluded human errors include relay setting errors, design

errors, wiring errors, inadvertent tripping of devices during testing or installation, and misapplication of Protection System components. Examples of misapplication of Protection System components include wrong CT or PT tap position, protective relay function misapplication, and components not specified correctly for their installation. Obviously, if one is setting up relevant data about hardware failures then human failures should be eliminated from the hardware performance analysis.

One example of human-error is not pertinent data might be in the area of testing "86" lock-out relays (LOR). "Entity A" has two types of LOR's type "X" and type "Y"; they want to move into a performance based maintenance interval. They have 1000 of each type, so the population variables are met. During electrical trip testing of all of their various schemes over the initial six-year interval they find zero type "X" failures, but human error led to tripping a BES Element 100 times; they find 100 type "Y" failures and had an additional 100 human-error caused tripping incidents. In this example the human-error caused Misoperations should not be used to judge the performance of either type of LOR. Analysis of the data might lead "Entity A" to change time intervals. Type "X" LOR can be placed into extended time interval testing because of its low failure rate (zero failures) while Type "Y" would have to be tested more often than every 6 calendar years (100 failures divided by 1000 units exceeds the 4% tolerance level).

Certain types of Protection System component errors that cause Misoperations are not considered Countable Events. Examples of excluded component errors include device malfunctions that are correctable by firmware upgrades and design errors that do not impact protection function.

What are some examples of methods of correcting segment perfomance for Performance-Based Maintenance?

There are a number of methods that may be useful for correcting segment performance formal-performing segments in a Performance-Based Maintenance system. Some examples are listed below.

- The maximum allowable interval, as established by the Performance-Based Maintenance system, can be decreased. This may, however, be slow to correct the performance of the segment.
- Identifiable sub-groups of components within the established segment, which have been identified to be the mal-performing portion of the segment, can be broken out as an independent segment for target action. Each resulting segment must satisfy the minimum population requirements for a Performance-Based Maintenance program in order to remain within the program.
- Targeted corrective actions can be taken to correct frequently occurring problems. An example would be replacement of capacitors within electromechanical distance relays if bad capacitors were determined to be the cause of the mal-performance.
- components within the mal-performing segment can be replaced with other components (electromechanical distance relays with microprocessor relays, for example) to remove the mal-performing segment.

If I find (and correct) a Unresolved Maintenance Issue as a result of a Misoperation investigation (Re: PRC-004), how does this affect my Performance-Based Maintenance program?

If you perform maintenance on a Protection System component for any reason (including as part of a PRC-004 required Misoperation investigation/corrective action), the actions performed can count as a maintenance activity provided the activities in the relevant Tables have been done, and, if you desire, "reset the clock" on everything you've done. In a Performance-Based Maintenance program, you also need to record the Unresolved Maintenance Issue as a Countable Event within the relevant component group segment and use it in the analysis to determine your correct Performance-Based Maintenance interval for that component group. Note that "resetting the clock" should not be construed as interfering with an entity's routine testing schedule because the "clock-reset" would actually make for a decreased time interval by the time the next routine test schedule comes around.

For example a relay scheme, consisting of four relays, is tested on 1-1-11 and the PSMP has a time interval of 3 calendar years with an allowable extension of 1 calendar year. The relay would be due again for routine testing before the end of the year 2015. This mythical relay scheme has a Misoperation on 6-1-12 that points to one of the four relays as bad. Investigation proves a bad relay and a new one is tested and installed in place of the original. This replacement relay actually could be retested before the end of the year 2016 (clock-reset) and not be out of compliance. This requires tracking maintenance by individual relays and is allowed. However, many companies schedule maintenance in other ways like by substation or by circuit breaker or by relay scheme. By these methods of tracking maintenance that "replaced relay" will be retested before the end of the year 2015. This is also acceptable. In no case was a particular relay tested beyond the PSMP of four years max, nor was the 6 year max of the Standard exceeded. The entity can reset the clock if they desire or the entity can continue with original schedules and, in effect, test even more frequently.

Why are batteries excluded from PBM? What about exclusion of batteries from condition based maintenance?

Batteries are the only element of a Protection System that is a perishable item with a shelf life. As a perishable item batteries require not only a constant float charge to maintain their freshness (charge), but periodic inspection to determine if there are problems associated with their aging process and testing to see if they are maintaining a charge or can still deliver their rated output as required.

Besides being perishable, a second unique feature of a battery that is unlike any other Protection System element is that a battery uses chemicals, metal alloys, plastics, welds, and bonds that must interact with each other to produce the constant dc source required for Protection Systems, undisturbed by ac system Disturbances.

No type of battery manufactured today for Protection System application is free from problems that can only be detected over time by inspection and test. These problems can arise from variances in the manufacturing process, chemicals and alloys used in the construction of the individual cells, quality of welds and bonds to connect the components, the plastics used to make batteries and the cell forming process for the individual battery cells.

Other problems that require periodic inspection and testing can result from transportation from the factory to the job site, length of time before a charge is put on the battery, the method of installation, the voltage level and duration of equalize charges, the float voltage level used, and the environment that the battery is installed in.

All of the above mentioned factors and several more not discussed here are beyond the control of the Functional Entities that want to use a Performance-Based Protection System Maintenance (PBM) program. These inherent variances in the aging process of a battery cell make establishment of a designated segment based on manufacturer and type of battery impossible.

The whole point of PBM is that if all variables are isolated then common aging and performance criteria would be the same. However, there are too many variables in the electrochemical process to completely isolate all of the performance-changing criteria.

Similarly, Functional Entities that want to establish a condition-based maintenance program using the highest levels of monitoring, resulting in the least amount of hands-on maintenance activity, cannot completely eliminate some periodic maintenance of the battery used in a station dc supply. Inspection of the battery is required on a Maximum Maintenance Interval listed in the tables due to the aging processes of station batteries. However, higher degrees of monitoring of a battery can eliminate the requirement for some periodic testing and some inspections (see Table 1-4).

Please provide an example of the calculations involved in extending maintenance time intervals using PBM.

Entity has 1000 GE-HEA lock-out relays; this is greater than the minimum sample requirement of 60. They start out testing all of the relays within the prescribed Table requirements (6 year max) by testing the relays every 5 years. The entity's plan is to test 200 units per year; this is greater than the minimum sample size requirement of 30. For the sake of example only the following will show 6 failures per year, reality may well have different numbers of failures every year. PBM requires annual assessment of failures found per units tested. After the first year of tests the entity finds 6 failures in the 200 units tested. 6/200= 3% failure rate. This entity is now allowed to extend the maintenance interval if they choose. The entity chooses to extend the maintenance interval of this population segment out to 10 years. This represents a rate of 100 units tested per year; entity selects 100 units to be tested in the following year. After that year of testing these 100 units the entity again finds 6 failed units. 6/100= 6% failures. This entity has now exceeded the acceptable failure rate for these devices and must accelerate testing of all of the units at a higher rate such that the failure rate is found to be less than 4% per year; the entity has three years to get this failure rate down to 4% or less (per year). In response to the 6% failure rate, the entity decreases the testing interval to 8 years. This means that they will now test 125 units per year (1000/8). The entity has just two years left to get the test rate corrected.

After a year, they again find six failures out of the 125 units tested. 6/125= 5% failures. In response to the 5% failure rate, the entity decreases the testing interval to seven years. This means that they will now test 143 units per year (1000/7). The entity has just one year left to get the test rate corrected. After a year, they again find six failures out of the 143 units tested. 6/143= 4.2% failures.

(Note that the entity has tried five years and they were under the 4% limit and they tried seven years and they were over the 4% limit. They must be back at 4% failures or less in the next year so they might simply elect to go back to five years.)

Instead, in response to the 5% failure rate, the entity decreases the testing interval to six years. This means that they will now test 167 units per year (1000/6). After a year, they again find six

failures out of the 167 units tested. 6/167= 3.6% failures. Entity found that they could maintain the failure rate at no more than 4% failures by maintaining the testing interval at six years or less. Entity chose six-year interval and effectively extended their TBM (five years) program by 20%.

A note of practicality is that an entity will probably be in better shape to lengthen the intervals between tests if the failure rate is less than 2%. But the requirements allow for annual adjustments, if the entity desires. As a matter of maintenance management, an ever-changing test rate (units tested/year) may be un-workable.

Note that the "5% of components" requirement effectively sets a practical limit of 20 year maximum PBM interval. Also of note is the "3 years" requirement; an entity might arbitrarily extend time intervals from six years to 20 years. In the event that an entity finds a failure rate greater than 4%, then the test rate must be accelerated such that within three years the failure rate must be brought back down to 4% or less.

Here is a table that demonstrates the values discussed:

Year #	Total Population (P)	Test Interval (I)	Units to be Tested (U= P/I)	# of Failures Found (F)	Failure Rate (=F/U)	Decision to Change Interval Yes or No	Interval Chosen
1	1000	5 yrs	200	6	3%	Yes	10 yrs
2	1000	10 yrs	100	6	6%	Yes	8 yrs
3	1000	8 yrs	125	6	5%	Yes	7 yrs
4	1000	7 yrs	143	6	4.2%	Yes	6 yrs
5	1000	6 yrs	167	6	3.6%	No	6 yrs

Please provide an example of the calculations involved in extending maintenance time intervals using PBM for control circuitry.

Note that the following example captures "Control Circuitry" as all of the trip paths associated with a particular trip coil of a circuit breaker. An entity is not restricted to this method of counting control circuits. Perhaps another method an entity would prefer would be to simply track every individual (parallel) trip path. Or perhaps another method would be to track all of the trip outputs from a specific (set) of relays protecting a specific element. Under the included definition of "component":

The designation of what constitutes a control circuit component is very dependent upon how an entity performs and tracks the testing of the control circuitry. Some entities test their control circuits on a breaker basis whereas others test their circuitry on a local zone of protection basis. Thus, entities are allowed the latitude to designate their own definitions of control circuit components. Another example of where the entity has some discretion on determining what constitutes a single component is the voltage and current sensing devices, where the entity may choose either to designate a full three-phase set of such devices or a single device as a single component.

And in Attachment A (PBM) the definition of Segment:

Segment – *Protection Systems or components of a consistent design standard, or a particular model or type from a single manufacturer that typically share other common elements. Consistent performance is expected across the entire population of a segment. A segment must contain at least sixty (60) individual components.*

Example:

Entity has 1,000 circuit breakers, all of which have two trip coils, for a total of 2,000 trip coils; if all circuitry was designed and built with a consistent (internal entity) standard, then this is greater than the minimum sample requirement of 60.

For the sake of further example, the following facts are given:

Half of all relay panels (500) were built 40 years ago by an outside contractor, consisted of asbestos wrapped 600V-insulation panel wiring, and the cables exiting the control house are THHN pulled in conduit direct to exactly half of all of the various circuit breakers. All of the relay panels and cable pulls were built with consistent standards and consistent performance standard expectations within the segment (which is greater than 60). Each relay panel has redundant microprocessor (MPC) relays (retrofitted); each MPC relay supplies an individual trip output to each of the two trip coils of the assigned circuit breaker.

Approximately 35 years ago, the entity developed their own internal construction crew and now builds all of their own relay panels from parts supplied from vendors that meet the entity's specifications, including SIS 600V insulation wiring and copper-sheathed cabling within the direct conduits to circuit breakers. The construction crew uses consistent standards in the construction. This newer segment of their control circuitry population is different than the original segment, consistent (standards, construction and performance expectations) within the new segment and constitutes the remainder of the entity's population (another 500 panels and the cabling to the remaining 500 circuit breakers). Each relay panel has redundant microprocessor (MPC) relays; each MPC relay supplies an individual trip output to each of the two trip coils of the assigned circuit breaker. Every trip path in this newer segment has a device

that monitors the voltage directly across the trip contacts of the MPC relays and alarms via RTU and SCADA to the operations control room. This monitoring device, when not in alarm, demonstrates continuity all the way through the trip coil, cabling and wiring back to the trip contacts of the MPC relay.

The entity is tracking 2,000 trip coils (each consisting of multiple trip paths) in each of these two segments. But half of all of the trip paths are monitored; therefore, the trip paths are continuously tested and the circuit will alarm when there is a failure. These alarms have to be verified every 12 years for correct operation.

The entity now has 1,000 trip coils (and associated trip paths) remaining that they have elected to count as control circuits. The entity has instituted a process that requires the verification of every trip path to each trip coil (one unit), including the electrical activation of the trip coil. (The entity notes that the trip coils will have to be tripped electrically more often than the trip path verification, and is taking care of this activity through other documentation of Real-time Fault operations.)

They start out testing all of the trip coil circuits within the prescribed Table requirements (12-year max) by testing the trip circuits every 10 years. The entity's plan is to test 100 units per year; this is greater than the minimum sample size requirement of 30. For the sake of example only, the following will show three failures per year; reality may well have different numbers of failures every year. PBM requires annual assessment of failures found per units tested. After the first year of tests, the entity finds three failures in the 100 units tested. 3/100= 3% failure rate.

This entity is now allowed to extend the maintenance interval, if they choose. The entity chooses to extend the maintenance interval of this population segment out to 20 years. This represents a rate of 50 units tested per year; entity selects 50 units to be tested in the following year. After that year of testing these 50 units, the entity again finds three failed units. 3/50= 6% failures.

This entity has now exceeded the acceptable failure rate for these devices and must accelerate testing of all of the units at a higher rate, such that the failure rate is found to be less than 4% per year; the entity has three years to get this failure rate down to 4% or less (per year).

In response to the 6% failure rate, the entity decreases the testing interval to 16 years. This means that they will now test 63 units per year (1000/16). The entity has just two years left to get the test rate corrected. After a year, they again find three failures out of the 63 units tested. 3/63= 4.76% failures.

In response to the >4% failure rate, the entity decreases the testing interval to 14 years. This means that they will now test 72 units per year (1000/14). The entity has just one year left to get the test rate corrected. After a year, they again find three failures out of the 72 units tested. 3/72= 4.2% failures.

(Note that the entity has tried 10 years, and they were under the 4% limit; and they tried 14 years, and they were over the 4% limit. They must be back at 4% failures or less in the next year, so they might simply elect to go back to 10 years.)

Instead, in response to the 4.2% failure rate, the entity decreases the testing interval to 12 years. This means that they will now test 84 units per year (1000/12). After a year, they again find three failures out of the 84 units tested. 3/84= 3.6% failures.

Entity found that they could maintain the failure rate at no more than 4% failures by maintaining the testing interval at 12 years or less. Entity chose 12-year interval, and effectively extended their TBM (10 years) program by 20%.

A note of practicality is that an entity will probably be in better shape to lengthen the intervals between tests if the failure rate is less than 2%. But the requirements allow for annual adjustments if the entity desires. As a matter of maintenance management, an ever-changing test rate (units tested / year) may be un-workable.

Note that the "5% of components" requirement effectively sets a practical limit of 20-year maximum PBM interval. Also of note is the "3 years" requirement; an entity might arbitrarily extend time intervals from six years to 20 years. In the event that an entity finds a failure rate greater than 4%, then the test rate must be accelerated such that within three years the failure rate must be brought back down to 4% or less.

Here is a table that demonstrates the values discussed:

Year #	Total Population (P)	Test Interval (I)	Units to be Tested (U= P/I)	# of Failures Found (F)	Failure Rate (=F/U)	Decision to Change Interval Yes or No	Interval Chosen
1	1000	10 yrs	100	3	3%	Yes	20 yrs
2	1000	20 yrs	50	3	6%	Yes	16yrs
3	1000	16 yrs	63	3	4.8%	Yes	14 yrs
4	1000	14 yrs	72	3	4.2%	Yes	12 yrs
5	1000	12 yrs	84	3	3.6%	No	12 yrs

Please provide an example of the calculations involved in extending maintenance time intervals using PBM for voltage and current sensing devices.

Note that the following example captures "voltage and current inputs to the protective relays" as all of the various current transformer and potential transformer signals associated with a particular set of relays used for protection of a specific Element. This entity calls this set of protective relays a "Relay Scheme." Thus, this entity chooses to count PT and CT signals as a group instead of individually tracking maintenance activities to specific bushing CT's or specific PT's. An entity is not restricted to this method of counting voltage and current devices, signals and paths. Perhaps another method an entity would prefer would be to simply track every individual PT and CT. Note that a generation maintenance group may well select the latter because they may elect to perform routine off-line tests during generator outages, whereas a transmission maintenance group might create a process that utilizes Real-time system values measured at the relays. Under the included definition of "component":

The designation of what constitutes a control circuit component is very dependent upon how an entity performs and tracks the testing of the control circuitry. Some entities test their control circuits on a breaker basis whereas others test their circuitry on a local zone of protection basis. Thus, entities are allowed the latitude to designate their own definitions of control circuit components. Another example of where the entity has some discretion on determining what constitutes a single component is the voltage and current sensing devices, where the entity may choose either to designate a full three-phase set of such devices or a single device as a single component.

And in Attachment A (PBM) the definition of Segment:

Segment – *Protection Systems or components of a consistent design standard, or a particular model or type from a single manufacturer that typically share other common elements. Consistent performance is expected across the entire population of a segment. A segment must contain at least sixty (60) individual components.*

Example:

Entity has 2000 "Relay Schemes," all of which have three current signals supplied from bushing CTs, and three voltage signals supplied from substation bus PT's. All cabling and circuitry was designed and built with a consistent (internal entity) standard, and this population is greater than the minimum sample requirement of 60.

For the sake of further example the following facts are given:

Half of all relay schemes (1,000) are supplied with current signals from ANSI STD C800 bushing CTs and voltage signals from PTs built by ACME Electric MFR CO. All of the relay panels and cable pulls were built with consistent standards, and consistent performance standard expectations exist for the consistent wiring, cabling and instrument transformers within the segment (which is greater than 60).

The other half of the entity's relay schemes have MPC relays with additional monitoring built-in that compare DNP values of voltages and currents (or Watts and VARs), as interpreted by the MPC relays and alarm for an entity-accepted tolerance level of accuracy. This newer segment of their "Voltage and Current Sensing" population is different than the original segment, consistent (standards, construction and performance expectations) within the new segment and constitutes the remainder of the entity's population.

The entity is tracking many thousands of voltage and current signals within 2,000 relay schemes (each consisting of multiple voltage and current signals) in each of these two segments. But half of all of the relay schemes voltage and current signals are monitored; therefore, the voltage and current signals are continuously tested and the circuit will alarm when there is a failure; these alarms have to be verified every 12 years for correct operation.

The entity now has 1,000 relay schemes worth of voltage and current signals remaining that they have elected to count within their relay schemes designation. The entity has instituted a process that requires the verification of these voltage and current signals within each relay scheme (one unit).

(Please note - a problem discovered with a current or voltage signal found at the relay could be caused by anything from the relay, all the way to the signal source itself. Having many sources of problems can easily increase failure rates beyond the rate of failures of just one item (for example just PTs). It is the intent of the SDT to minimize failure rates of all of the equipment to an acceptable level; thus, any failure of any item that gets the signal from source to relay is counted. It is for this reason that the SDT chose to set the boundary at the ability of the signal to be delivered all the way to the relay.

The entity will start out measuring all of the relay scheme voltage and currents at the individual relays within the prescribed Table requirements (12 year max) by measuring the voltage and current values every 10 years. The entity's plan is to test 100 units per year; this is greater than the minimum sample size requirement of 30. For the sake of example only, the following will show three failures per year; reality may well have different numbers of failures every year. PBM requires annual assessment of failures found per units tested. After the first year of tests, the entity finds three failures in the 100 units tested. 3/100= 3% failure rate.

This entity is now allowed to extend the maintenance interval, if they choose. The entity chooses to extend the maintenance interval of this population segment out to 20 years. This represents a rate of 50 units tested per year; entity selects 50 units to be tested in the following year. After that year of testing these 50 units, the entity again finds three failed units. 3/50= 6% failures.

This entity has now exceeded the acceptable failure rate for these devices and must accelerate testing of all of the units at a higher rate, such that the failure rate is found to be less than 4% per year; the entity has three years to get this failure rate down to 4% or less (per year).

In response to the 6% failure rate, the entity decreases the testing interval to 16 years. This means that they will now test 63 units per year (1000/16). The entity has just two years left to get the test rate corrected. After a year, they again find three failures out of the 63 units tested. 3/63= 4.76% failures.

In response to the >4%failure rate, the entity decreases the testing interval to 14 years. This means that they will now test 72 units per year (1000/14). The entity has just one year left to get the test rate corrected. After a year, they again find three failures out of the 72 units tested. 3/72= 4.2% failures.

(Note that the entity has tried 10 years, and they were under the 4% limit; and they tried 14 years, and they were over the 4% limit. They must be back at 4% failures or less in the next year, so they might simply elect to go back to 10 years.)

Instead, in response to the 4.2% failure rate, the entity decreases the testing interval to 12 years. This means that they will now test 84 units per year (1,000/12). After a year, they again find three failures out of the 84 units tested. 3/84= 3.6% failures.

Entity found that they could maintain the failure rate at no more than 4% failures by maintaining the testing interval at 12 years or less. Entity chose 12-year interval and effectively extended their TBM (10 years) program by 20%.

A note of practicality is that an entity will probably be in better shape to lengthen the intervals between tests if the failure rate is less than 2%. But the requirements allow for annual adjustments, if the entity desires. As a matter of maintenance management, an ever-changing test rate (units tested/year) may be un-workable.

Note that the "5% of components" requirement effectively sets a practical limit of 20-year maximum PBM interval. Also of note is the "3 years" requirement; an entity might arbitrarily extend time intervals from six years to 20 years. In the event that an entity finds a failure rate greater than 4%, then the test rate must be accelerated such that within three years the failure rate must be brought back down to 4% or less.

Here is a table that demonstrates the values discussed:

Year #	Total Population (P)	Test Interval (I)	Units to be Tested (U= P/I)	# of Failures Found (F)	Failure Rate (=F/U)	Decision to Change Interval Yes or No	Interval Chose
1	1000	10 yrs	100	3	3%	Yes	20 yrs
2	1000	20 yrs	50	3	6%	Yes	16yrs
3	1000	16 yrs	63	3	4.8%	Yes	14 yrs
4	1000	14 yrs	72	3	4.2%	Yes	12 yrs
5	1000	12 yrs	84	3	3.6%	No	12 yrs

10. Overlapping the Verification of Sections of the Protection System

Tables 1-1 through 1-5 require that every Protection System component be periodically verified. One approach, but not the only method, is to test the entire protection scheme as a unit, from the secondary windings of voltage and current sources to breaker tripping. For practical ongoing verification, sections of the Protection System may be tested or monitored individually. The boundaries of the verified sections must overlap to ensure that there are no gaps in the verification. See Appendix A of this Supplementary Reference for additional discussion on this topic.

All of the methodologies expressed within this report may be combined by an entity, as appropriate, to establish and operate a maintenance program. For example, a Protection System may be divided into multiple overlapping sections with a different maintenance methodology for each section:

- Time-based maintenance with appropriate maximum verification intervals for categories of equipment, as given in the Tables 1-1 through 1-5;
- Monitoring as described in Tables 1-1 through 1-5;
- A Performance-Based Maintenance program as described in Section 9 above, or Attachment A of the standard;
- Opportunistic verification using analysis of Fault records, as described in Section 11

10.1 Frequently Asked Questions:

My system has alarms that are gathered once daily through an auto-polling system; this is not really a conventional SCADA system but does it meet the Table 1 requirements for inclusion as a monitored system?

Yes, provided the auto-polling that gathers the alarms reports those alarms to a location where the action can be initiated to correct the Unresolved Maintenance Issue. This location does not have to be the location of the engineer or the technician that will eventually repair the problem, but rather a location where the action can be initiated.

11. Monitoring by Analysis of Fault Records

Many users of microprocessor relays retrieve Fault event records and oscillographic records by data communications after a Fault. They analyze the data closely if there has been an apparent Misoperation, as NERC standards require. Some advanced users have commissioned automatic Fault record processing systems that gather and archive the data. They search for evidence of component failures or setting problems hidden behind an operation whose overall outcome seems to be correct. The relay data may be augmented with independently captured Digital Fault Recorder (DFR) data retrieved for the same event.

Fault data analysis comprises a legitimate CBM program that is capable of reducing the need for a manual time-interval based check on Protection Systems whose operations are analyzed. Even electromechanical Protection Systems instrumented with DFR channels may achieve some CBM benefit. The completeness of the verification then depends on the number and variety of Faults in the vicinity of the relay that produce relay response records and the specific data captured.

A typical Fault record will verify particular parts of certain Protection Systems in the vicinity of the Fault. For a given Protection System installation, it may or may not be possible to gather within a reasonable amount of time an ensemble of internal and external Fault records that completely verify the Protection System.

For example, Fault records may verify that the particular relays that tripped are able to trip via the control circuit path that was specifically used to clear that Fault. A relay or DFR record may indicate correct operation of the protection communications channel. Furthermore, other nearby Protection Systems may verify that they restrain from tripping for a Fault just outside their respective zones of protection. The ensemble of internal Fault and nearby external Fault event data can verify major portions of the Protection System, and reset the time clock for the Table 1 testing intervals for the verified components only.

What can be shown from the records of one operation is very specific and limited. In a panel with multiple relays, only the specific relay(s) whose operation can be observed without ambiguity should be used. Be careful about using Fault response data to verify that settings or calibration are correct. Unless records have been captured for multiple Faults close to either side of a setting boundary, setting or calibration could still be incorrect.

PMU data, much like DME data, can be utilized to prove various components of the Protection System. Obviously, care must be taken to attribute proof only to the parts of a Protection System that can actually be proven using the PMU or DME data.

If Fault record data is used to show that portions or all of a Protection System have been verified to meet Table 1 requirements, the owner must retain the Fault records used, and the maintenance-related conclusions drawn from this data and used to defer Table 1 tests, for at least the retention time interval given in Section 8.2.

11.1 Frequently Asked Questions:

I use my protective relays for Fault and Disturbance recording, collecting oscillographic records and event records via communications for Fault analysis to meet NERC and DME requirements. What are the maintenance requirements for the relays?

For relays used only as Disturbance Monitoring Equipment, NERC Standard PRC-018-1 R3 & R6 states the maintenance requirements and is being addressed by a standards activity that is revising PRC-002-1 and PRC-018-1. For protective relays "that are designed to provide protection for the BES," this standard applies, even if they also perform DME functions.

12. Importance of Relay Settings in Maintenance Programs

In manual testing programs, many utilities depend on pickup value or zone boundary tests to show that the relays have correct settings and calibration. Microprocessor relays, by contrast, provide the means for continuously monitoring measurement accuracy. Furthermore, the relay digitizes inputs from one set of signals to perform all measurement functions in a single self-monitoring microprocessor system. These relays do not require testing or calibration of each setting.

However, incorrect settings may be a bigger risk with microprocessor relays than with older relays. Some microprocessor relays have hundreds or thousands of settings, many of which are critical to Protection System performance.

Monitoring does not check measuring element settings. Analysis of Fault records may or may not reveal setting problems. To minimize risk of setting errors after commissioning, the user should enforce strict settings data base management, with reconfirmation (manual or automatic) that the installed settings are correct whenever maintenance activity might have changed them; for background and guidance, see [5] in References.

Table 1 requires that settings must be verified to be as specified. The reason for this requirement is simple: With legacy relays (non-microprocessor protective relays), it is necessary to know the value of the intended setting in order to test, adjust and calibrate the relay. Proving that the relay works per specified setting was the de facto procedure. However, with the advanced microprocessor relays, it is possible to change relay settings for the purpose of verifying specific functions and then neglect to return the settings to the specified values. While there is no specific requirement to maintain a settings management process, there remains a need to verify that the settings left in the relay are the intended, specified settings. This need may manifest itself after any of the following:

- One or more settings are changed for any reason.
- A relay fails and is repaired or replaced with another unit.
- A relay is upgraded with a new firmware version.

12.1 Frequently Asked Questions:

How do I approach testing when I have to upgrade firmware of a microprocessor relay?

The entity should ensure that the relay continues to function properly after implementation of firmware changes. Some entities may have a R&D department that might routinely run acceptance tests on devices with firmware upgrades before allowing the upgrade to be installed. Other entities may rely upon the vigorous testing of the firmware OEM. An entity has the latitude to install devices and/or programming that they believe will perform to their satisfaction. If an entity should choose to perform the maintenance activities specified in the Tables following a firmware upgrade, then they may, if they choose, reset the time clock on that set of maintenance activities so that they would not have to repeat the maintenance on its

regularly scheduled cycle. (However, for simplicity in maintenance schedules, some entities may choose to not reset this time clock; it is merely a suggested option.)

If I upgrade my old relays, then do I have to maintain my previous equipment maintenance documentation?

If an equipment item is repaired or replaced, then the entity can restart the maintenance-activity-time-interval-clock, if desired; however, the replacement of equipment does not remove any documentation requirements. The requirements in the standard are intended to ensure that an entity has a maintenance plan, and that the entity adheres to minimum activities and maximum time intervals. The documentation requirements are intended to help an entity demonstrate compliance. For example, saving the dates and records of the last two maintenance activities is intended to demonstrate compliance with the interval. Therefore, if you upgrade or replace equipment, then you still must maintain the documentation for the previous equipment, thus demonstrating compliance with the time interval requirement prior to the replacement action.

We have a number of installations where we have changed our Protection System components. Some of the changes were upgrades, but others were simply system rating changes that merely required taking relays "out-of-service". What are our responsibilities when it comes to "out-of-service" devices?

Assuming that your system up-rates, upgrades and overall changes meet any and all other requirements and standards, then the requirements of PRC-005-2 are simple – if the Protection System component performs a Protection System function, then it must be maintained. If the component no longer performs Protection System functions, then it does not require maintenance activities under the Tables of PRC-005-2. While many entities might physically remove a component that is no longer needed, there is no requirement in PRC-005-2 to remove such component(s). Obviously, prudence would dictate that an "out-of-service" device is truly made inactive. There are no record requirements listed in PRC-005-2 for Protection System components not used.

While performing relay testing of a protective device on our Bulk Electric System, it was discovered that the protective device being tested was either broken or out of calibration. Does this satisfy the relay testing requirement, even though the protective device tested bad, and may be unable to be placed back into service?

Yes, PRC-005-2 requires entities to perform relay testing on protective devices on a given maintenance cycle interval. By performing this testing, the entity has satisfied PRC-005-2 requirement, although the protective device may be unable to be returned to service under normal calibration adjustments. R5 states:

"R5. Each Transmission Owner, Generator Owner, and Distribution Provider shall demonstrate efforts to correct any identified Unresolved Maintenance Issues."

Also, when a failure occurs in a Protection System, power system security may be comprised, and notification of the failure must be conducted in accordance with relevant NERC standards.

If I show the protective device out of service while it is being repaired, then can I add it back as a new protective device when it returns? If not, my relay testing history would show that I was out of compliance for the last maintenance cycle.

The maintenance and testing requirements (R5) state "…shall demonstrate efforts to correct any identified Unresolved Maintenance Issues..." The type of corrective activity is not stated; however, it could include repairs or replacements.

Your documentation requirements will increase, of course, to demonstrate that your device tested bad and had corrective actions initiated. Your regional entity might ask about the status of your corrective actions.

13. Self-Monitoring Capabilities and Limitations

Microprocessor relay proponents have cited the self-monitoring capabilities of these products for nearly 20 years. Theoretically, any element that is monitored does not need a periodic manual test. A problem today is that the community of manufacturers and users has not created clear documentation of exactly what is and is not monitored. Some unmonitored but critical elements are buried in installed systems that are described as self-monitoring.

To utilize the extended time intervals allowed by monitoring, the user must document that the monitoring attributes of the device match the minimum requirements listed in the Table 1.

Until users are able to document how all parts of a system which are required for the protective functions are monitored or verified (with help from manufacturers), they must continue with the unmonitored intervals established in Table 1 and Table 3.

Going forward, manufacturers and users can develop mappings of the monitoring within relays, and monitoring coverage by the relay of user circuits connected to the relay terminals.

To enable the use of the most extensive monitoring (and never again have a hands-on maintenance requirement), the manufacturers of the microprocessor-based self-monitoring components in the Protection System should publish for the user a document or map that shows:

- How all internal elements of the product are monitored for any failure that could impact Protection System performance.
- Which connected circuits are monitored by checks implemented within the product; how to connect and set the product to assure monitoring of these connected circuits; and what circuits or potential problems are not monitored.

This manufacturer's information can be used by the registered entity to document compliance of the monitoring attributes requirements by:

- Presenting or referencing the product manufacturer's documents.
- Explaining in a system design document the mapping of how every component and circuit that is critical to protection is monitored by the microprocessor product(s) or by other design features.
- Extending the monitoring to include the alarm transmission Facilities through which failures are reported within a given time frame to allocate where action can be taken to initiate resolution of the alarm attributed to an Unresolved Maintenance Issue, so that failures of monitoring or alarming systems also lead to alarms and action.
- Documenting the plans for verification of any unmonitored components according to the requirements of Table 1 and Table 3.

13.1 Frequently Asked Questions:

I can't figure out how to demonstrate compliance with the requirements for the highest level of monitoring of Protection Systems. Why does this Maintenance Standard describe a maintenance program approach I cannot achieve?

Demonstrating compliance with the requirements for the highest level of monitoring any particular component of Protection Systems is likely to be very involved, and may include detailed manufacturer documentation of complete internal monitoring within a device, comprehensive design drawing reviews, and other detailed documentation. This standard does not presume to specify what documentation must be developed; only that it must be documented.

There may actually be some equipment available that is capable of meeting these highest levels of monitoring criteria, in which case it may be maintained according to the highest level of monitoring shown on the Tables. However, even if there is no equipment available today that can meet this level of monitoring, the standard establishes the necessary requirements for when such equipment becomes available.

By creating a roadmap for development, this provision makes the standard technology-neutral. The Standard Drafting Team wants to avoid the need to revise the standard in a few years to accommodate technology advances that may be coming to the industry.

14. Notification of Protection System Failures

When a failure occurs in a Protection System, power system security may be compromised, and notification of the failure must be conducted in accordance with relevant NERC standard(s). Knowledge of the failure may impact the system operator's decisions on acceptable Loading conditions.

This formal reporting of the failure and repair status to the system operator by the Protection System owner also encourages the system owner to execute repairs as rapidly as possible. In some cases, a microprocessor relay or carrier set can be replaced in hours; wiring termination failures may be repaired in a similar time frame. On the other hand, a component in an electromechanical or early-generation electronic relay may be difficult to find and may hold up repair for weeks. In some situations, the owner may have to resort to a temporary protection panel, or complete panel replacement.

15. Maintenance Activities

Some specific maintenance activities are a requirement to ensure reliability. An example would be that a BES entity could be prudent in its protective relay maintenance, but if its battery maintenance program is lacking, then reliability could still suffer. The NERC glossary outlines a Protection System as containing specific components. PRC-005-2 requires specific maintenance activities be accomplished within a specific time interval. As noted previously, higher technology equipment can contain integral monitoring capability that actually performs maintenance verification activities routinely and often; therefore, *manual intervention* to perform certain activities on these type components may not be needed.

15.1 Protective Relays (Table 1-1)

These relays are defined as the devices that receive the input signal from the current and voltage sensing devices and are used to isolate a Faulted Element of the BES. Devices that sense thermal, vibration, seismic, pressure, gas, or any other non-electrical inputs are excluded.

Non-microprocessor based equipment is treated differently than microprocessor-based equipment in the following ways; the relays should meet the asset owners' tolerances:

- Non-microprocessor devices must be tested with voltage and/or current applied to the device.
- Microprocessor devices may be tested through the integral testing of the device.
    - There is no specific protective relay commissioning test or relay routine test mandated.
    - There is no specific documentation mandated.

15.1.1 Frequently Asked Questions:

What calibration tolerance should be applied on electromechanical relays?

Each entity establishes their own acceptable tolerances when applying protective relaying on their system. For some Protection System components, adjustment is required to bring measurement accuracy within the parameters established by the asset owner based on the specific application of the component. A calibration failure is the result if testing finds the specified parameters to be out of tolerance.

15.2 Voltage & Current Sensing Devices (Table 1-3)

These are the current and voltage sensing devices, usually known as instrument transformers. There is presently a technology available (fiber-optic Hall-effect) that does not utilize conventional transformer technology; these devices and other technologies that produce quantities that represent the primary values of voltage and current are considered to be a type of voltage and current sensing devices included in this standard.

The intent of the maintenance activity is to verify the input to the protective relay from the device that produces the current or voltage signal sample.

There is no specific test mandated for these components. The important thing about these signals is to know that the expected output from these components actually reaches the

protective relay. Therefore, the proof of the proper operation of these components also demonstrates the integrity of the wiring (or other medium used to convey the signal) from the current and voltage sensing device, all the way to the protective relay. The following observations apply:

- There is no specific ratio test, routine test or commissioning test mandated.
- There is no specific documentation mandated.
- It is required that the signal be present at the relay.
- This expectation can be arrived at from any of a number of means; including, but not limited to, the following: By calculation, by comparison to other circuits, by commissioning tests, by thorough inspection, or by any means needed to verify the circuit meets the asset owner's Protection System maintenance program.
- An example of testing might be a saturation test of a CT with the test values applied at the relay panel; this, therefore, tests the CT, as well as the wiring from the relay all the back to the CT.
- Another possible test is to measure the signal from the voltage and/or current sensing devices, during Load conditions, at the input to the relay.
- Another example of testing the various voltage and/or current sensing devices is to query the microprocessor relay for the Real-time Loading; this can then be compared to other devices to verify the quantities applied to this relay. Since the input devices have supplied the proper values to the protective relay, then the verification activity has been satisfied. Thus, event reports (and oscillographs) can be used to verify that the voltage and current sensing devices are performing satisfactorily.
- Still another method is to measure total watts and vars around the entire bus; this should add up to zero watts and zero vars, thus proving the voltage and/or current sensing devices system throughout the bus.
- Another method for proving the voltage and/or current-sensing devices is to complete commissioning tests on all of the transformers, cabling, fuses and wiring.
- Any other method that verifies the input to the protective relay from the device that produces the current or voltage signal sample.

15.2.1 Frequently Asked Questions:

What is meant by "…verify the current and voltage circuit inputs from the voltage and current sensing devices to the protective relays …" Do we need to perform ratio, polarity and saturation tests every few years?

No. You must verify that the protective relay is receiving the expected values from the voltage and current-sensing devices (typically voltage and current transformers). This can be as difficult as is proposed by the question (with additional testing on the cabling and substation wiring to ensure that the values arrive at the relays); or simplicity can be achieved by other verification methods. While some examples follow, these are not intended to represent an all-inclusive list; technology advances and ingenuity should not be excluded from making comparisons and verifications:

- Compare the secondary values, at the relay, to a metering circuit, fed by different current transformers, monitoring the same line as the questioned relay circuit.
- Compare the individual phase secondary values at the relay panel (with additional testing on the panel wiring to ensure that the values arrive at those relays) with the other phases, and verify that residual currents are within expected bounds.
- Observe all three phase currents and the residual current at the relay panel with an oscilloscope, observing comparable magnitudes and proper phase relationship, with additional testing on the panel wiring to ensure that the values arrive at the relays.
- Compare the values, as determined by the questioned relay (such as, but not limited to, a query to the microprocessor relay) to another protective relay monitoring the same line, with currents supplied by different CTs.
- Compare the secondary values, at the relay with values measured by test instruments (such as, but not limited to multi-meters, voltmeter, clamp-on ammeters, etc.) and verified by calculations and known ratios to be the values expected. For example, a single PT on a 100KV bus will have a specific secondary value that, when multiplied by the PT ratio, arrives at the expected bus value of 100KV.
- Query SCADA for the power flows at the far end of the line protected by the questioned relay, compare those SCADA values to the values as determined by the questioned relay.
- Totalize the Watts and VARs on the bus and compare the totals to the values as seen by the questioned relay.

The point of the verification procedure is to ensure that all of the individual components are functioning properly; and that an ongoing proactive procedure is in place to re-check the various components of the protective relay measuring Systems.

Is wiring insulation or hi-pot testing required by this Maintenance Standard?

No, wiring insulation and equipment hi-pot testing are not specifically required by the Maintenance Standard. However, if the method of verifying CT and PT inputs to the relay involves some other method than actual observation of current and voltage transformer secondary inputs to the relay, it might be necessary to perform some sort of cable integrity test to verify that the instrument transformer secondary signals are actually making it to the relay

and not being shunted off to ground. For instance, you could use CT excitation tests and PT turns ratio tests and compare to baseline values to verify that the instrument transformer outputs are acceptable. However, to conclude that these acceptable transformer instrument output signals are actually making it to the relay inputs, it also would be necessary to verify the insulation of the wiring between the instrument transformer and the relay.

My plant generator and transformer relays are electromechanical and do not have metering functions, as do microprocessor- based relays. In order for me to compare the instrument transformer inputs to these relays to the secondary values of other metered instrument transformers monitoring the same primary voltage and current signals, it would be necessary to temporarily connect test equipment, like voltmeters and clamp on ammeters, to measure the input signals to the relays. This practice seems very risky, and a plant trip could result if the technician were to make an error while measuring these current and voltage signals. How can I avoid this risk? Also, what if no other instrument transformers are available which monitor the same primary voltage or current signal?

Comparing the input signals to the relays to the outputs of other independent instrument transformers monitoring the same primary current or voltage is just one method of verifying the instrument transformer inputs to the relays, but is not required by the standard. Plants can choose how to best manage their risk. If online testing is deemed too risky, offline tests, such as, but not limited to, CT excitation test and PT turns ratio tests can be compared to baseline data and be used in conjunction with CT and PT secondary wiring insulation verification tests to adequately "verify the current and voltage circuit inputs from the voltage and current sensing devices to the protective relays …" while eliminating the risk of tripping an in service generator or transformer. Similarly, this same offline test methodology can be used to verify the relay input voltage and current signals to relays when there are no other instrument transformers monitoring available for purposes of signal comparison.

15.3 Control circuitry associated with protective functions (Table 1-5)

This component of Protection Systems includes the trip coil(s) of the circuit breaker, circuit switcher or any other interrupting device. It includes the wiring from the batteries to the relays. It includes the wiring (or other signal conveyance) from every trip output to every trip coil. It includes any device needed for the correct processing of the needed trip signal to the trip coil of the interrupting device; this requirement is meant to capture inputs and outputs to and from a protective relay that are necessary for the correct operation of the protective functions. In short, every trip path must be verified; the method of verification is optional to the asset owner. An example of testing methods to accomplish this might be to verify, with a volt-meter, the existence of the proper voltage at the open contacts, the open circuited input circuit and at the trip coil(s). As every parallel trip path has similar failure modes, each trip path from relay to trip coil must be verified. Each trip coil must be tested to trip the circuit breaker (or other interrupting device) at least once. There is a requirement to operate the circuit breaker (or other interrupting device) at least once every six years as part of the complete functional test. If a suitable monitoring system is installed that verifies every parallel trip path, then the manual-intervention testing of those parallel trip paths can be eliminated; however, the actual operation of the circuit breaker must still occur at least once every six years. This six-year tripping requirement can be completed as easily as tracking the Real-time Fault-clearing operations on the circuit breaker, or tracking the trip coil(s) operation(s) during circuit breaker routine maintenance actions.

The circuit-interrupting device should not be confused with a motor-operated disconnect. The intent of this standard is to require maintenance intervals and activities on Protection Systems equipment, and not just all system isolating equipment.

It is necessary, however, to classify a device that actuates a high-speed auto-closing ground switch as an interrupting device, if this ground switch is utilized in a Protection System and forces a ground Fault to occur that then results in an expected Protection System operation to clear the forced ground Fault. The SDT believes that this is essentially a transferred-tripping device without the use of communications equipment. If this high-speed ground switch is "…designed to provide protection for the BES…" then this device needs to be treated as any other Protection System component. The control circuitry would have to be tested within 12 years, and any electromechanically operated device will have to be tested every six years. If the spring-operated ground switch can be disconnected from the solenoid triggering unit, then the solenoid triggering unit can easily be tested without the actual closing of the ground blade.

The dc control circuitry also includes each auxiliary tripping relay (94) and each lock-out relay (86) that may exist in any particular trip scheme. If the lock-out relays (86) are electromechanical type components, then they must be trip tested. The PSMT SDT considers these components to share some similarities in failure modes as electromechanical protective relays; as such, there is a six-year maximum interval between mandated maintenance tasks unless PBM is applied.

Contacts of the 86 and/or 94 that pass the trip current on to the circuit interrupting device trip coils will have to be checked as part of the 12 year requirement. Contacts of the 86 and/or 94 lock relay that operate non-BES interrupting devices are not required. Normally-open contacts that are not used to pass a trip signal and normally-closed contacts do not have to be verified. Verification of the tripping paths is the requirement.

While relays that do not respond to electrical quantities are presently excluded from this standard, their control circuits are included if the relay is installed to detect Faults on BES Elements. Thus, the control circuit of a BES transformer sudden pressure relay should be verified every 12 years, assuming its integrity is not monitored. While a sudden pressure relay control circuit is included within the scope of PRC-005-2, other alarming relay control circuits, (i.e., SF-6 low gas) are not included, even though they may trip the breaker being monitored.

New technology is also accommodated here; there are some tripping systems that have replaced the traditional hard-wired trip circuitry with other methods of trip-signal conveyance such as fiber-optics. It is the intent of the PSMT SDT to include this, and any other, technology that is used to convey a trip signal from a protective relay to a circuit breaker (or other interrupting device) within this category of equipment. The requirement for these systems is verification of the tripping path.

Monitoring of the control circuit integrity allows for no maintenance activity on the control circuit (excluding the requirement to operate trip coils and electromechanical lockout and/or tripping auxiliary relays). Monitoring of integrity means to monitor for continuity and/or presence of voltage on each trip path. For Ethernet or fiber-optic control systems, monitoring of integrity means to monitor communication ability between the relay and the circuit breaker.

The trip path from a sudden pressure device is a part of the Protection System control circuitry. The sensing element is omitted from PRC-005-2 testing requirements because the SDT is unaware of industry-recognized testing protocol for the sensing elements. The SDT believes

that Protection Systems that trip (or can trip) the BES should be included. This position is consistent with the currently-approved PRC-005-1, consistent with the SAR for Project 2007-17, and understands this to be consistent with the position of FERC staff.

15.3.1 Frequently Asked Questions:

Is it permissible to verify circuit breaker tripping at a different time (and interval) than when we verify the protective relays and the instrument transformers?

Yes, provided the entire Protective System is tested within the individual component's maximum allowable testing intervals.

The Protection System Maintenance Standard describes requirements for verifying the tripping of circuit breakers. What is this telling me about maintenance of circuit breakers?

Requirements in PRC-005-2 are intended to verify the integrity of tripping circuits, including the breaker trip coil, as well as the presence of auxiliary supply (usually a battery) for energizing the trip coil if a protection function operates. Beyond this, PRC-005-2 sets no requirements for verifying circuit breaker performance, or for maintenance of the circuit breaker.

How do I test each dc Control Circuit trip path, as established in Table 1-5 "Protection System Control Circuitry (Trip coils and auxiliary relays)"?

Table 1-5 specifies that each breaker trip coil and lockout relays that carry trip current to a trip coil must be operated within the specified time period. The required operations may be via targeted maintenance activities, or by documented operation of these devices for other purposes such as Fault clearing.

Are high-speed ground switch trip coils included in the dc control circuitry?

Yes. PRC-005-2 includes high-speed grounding switch trip coils within the dc control circuitry to the degree that the initiating Protection Systems are characterized as "transmission Protection Systems."

Does the control circuitry and trip coil of a non-BES breaker, tripped via a BES protection component, have to be tested per Table 1.5? (Refer to Table 3 for examples 1 and 2)Example 1: A non-BES circuit breaker that is tripped via a Protection System to which PRC-005-2 applies might be (but is not limited to) a 12.5KV circuit breaker feeding (non-black-start) radial Loads but has a trip that originates from an under-frequency (81) relay.

- The relay must be verified.
- The voltage signal to the relay must be verified.
- All of the relevant dc supply tests still apply.
- All of the relevant communication system tests still apply.
- The unmonitored trip circuit between the relay and any lock-out or auxiliary relay must be verified every 12 years.
- The unmonitored trip circuit between the lock-out (or auxiliary relay) and the non-BES breaker does not have to be proven with an electrical trip.
- In the case where there is no lock-out or auxiliary tripping relay used, the trip circuit to the non-BES breaker does not have to be proven with an electrical trip.

- The trip coil of the non-BES circuit breaker does not have to be individually proven with an electrical trip.

Example 2: A Transmission Owner may have a non-BES breaker that is tripped via a Protection System to which PRC-005-2 applies, which may be (but is not limited to) a 13.8 KV circuit breaker feeding (non-black-start) radial Loads but has a trip that originates from a BES 115KV line relay.

- The relay must be verified
- The voltage signal to the relay must be verified
- All of the relevant dc supply tests still apply
- All of the relevant communication system tests still apply
- The unmonitored trip circuit between the relay and any lock-out (86) or auxiliary (94) relay must be verified every 12 years
- The unmonitored trip circuit between the lock-out (86) (or auxiliary (94)) relay and the non-BES breaker does not have to be proven with an electrical trip
- In the case where there is no lockout (86) or auxiliary (94) tripping relay used, the trip circuit to the non-BES breaker does not have to be proven with an electrical trip.
- The trip coil of the non-BES circuit breaker does not have to be individually proven with an electrical trip

Example 3: A Generator Owner may have an non-BES circuit breaker that is tripped via a Protection System to which PRC-005-2 applies, such as the generator field breaker and low-side breakers on station service/excitation transformers connected to the generator bus.

Trip testing of the generator field breaker and low side station service/excitation transformer breaker(s) via lockout or auxiliary tripping relays are not required since these breakers may be associated with radially fed loads and are not considered to be BES breakers. An example of an otherwise non-BES circuit breaker that is tripped via a BES protection component might be (but is not limited to) a 6.9kV station service transformer source circuit breaker but has a trip that originates from a generator differential (87) relay.

- The differential relay must be verified.
- The current signals to the relay must be verified.
- All of the relevant dc supply tests still apply.
- The unmonitored trip circuit between the relay and any lock-out or auxiliary relay must be verified every 12 years.
- The unmonitored trip circuit between the lock-out (or auxiliary relay) and the non-BES breaker does not have to be proven with an electrical trip.
- In the case where there is no lock-out or auxiliary tripping relay used, the trip circuit to the non-BES breaker does not have to be proven with an electrical trip.
- The trip coil of the non-BES circuit breaker does not have to be individually proven with an electrical trip.

However, it is very prudent to verify the tripping of such reakers for the integrity of the overall generation plant.

Do I have to verify operation of breaker "a" contacts or any other normally closed auxiliary contacts in the trip path of each breaker as part of my control circuit test?

Operation of normally-closed contacts does not have to be verified. Verification of the tripping paths is the requirement. The continuity of the normally closed contacts will be verified when the tripping path is verified.

15.4 Batteries and DC Supplies (Table 1-4)

The NERC definition of a Protection System is:

- Protective relays which respond to electrical quantities,
- Communications Systems necessary for correct operation of protective functions,
- Voltage and current sensing devices providing inputs to protective relays,
- Station dc supply associated with protective functions (including station batteries, battery chargers, and non-battery-based dc supply), and
- Control circuitry associated with protective functions through the trip coil(s) of the circuit breakers or other interrupting devices.

The station battery is not the only component that provides dc power to a Protection System. In the new definition for Protection System, "station batteries" are replaced with "station dc supply" to make the battery charger and dc producing stored energy devices (that are not a battery) part of the Protection System that must be maintained.

The PSMT SDT recognizes that there are several technological advances in equipment and testing procedures that allow the owner to choose how to verify that a battery string is free of open circuits. The term "continuity" was introduced into the standard to allow the owner to choose how to verify continuity of a battery set by various methods, and not to limit the owner to other conventional methods of showing continuity. Continuity, as used in Table 1-4 of the standard, refers to verifying that there is a continuous current path from the positive terminal of the station battery set to the negative terminal. Without verifying continuity of a station battery, there is no way to determine that the station battery is available to supply dc power to the station. An open battery string will be an unavailable power source in the event of loss of the battery charger.

Batteries cannot be a unique population segment of a Performance-Based Maintenance Program (PBM) because there are too many variables in the electrochemical process to completely isolate all of the performance-changing criteria necessary for using PBM on battery Systems. However, nothing precludes the use of a PBM process for any other part of a dc supply besides the batteries themselves.

15.4.1 Frequently Asked Questions:

What constitutes the station dc supply, as mentioned in the definition of Protective System?

The previous definition of Protection System includes batteries, but leaves out chargers. The latest definition includes chargers, as well as dc systems that do not utilize batteries. This revision of PRC-005-2 is intended to capture these devices that were not included under the previous definition. The station direct current (dc) supply normally consists of two components: the battery charger and the station battery itself. There are also emerging

technologies that provide a source of dc supply that does not include either a battery or charger.

Battery Charger - The battery charger is supplied by an available ac source. At a minimum, the battery charger must be sized to charge the battery (after discharge) and supply the constant dc load. In many cases, it may be sized also to provide sufficient dc current to handle the higher energy requirements of tripping breakers and switches when actuated by the protective relays in the Protection System.

Station Battery - Station batteries provide the dc power required for tripping and for supplying normal dc power to the station in the event of loss of the battery charger. There are several technologies of battery that require unique forms of maintenance as established in Table 1-4.

Emerging Technologies - Station dc supplies are currently being developed that use other energy storage technologies besides the station battery to prevent loss of the station dc supply when ac power is lost. Maintenance of these station dc supplies will require different kinds of tests and inspections. Table 1-4 presents maintenance activities and maximum allowable testing intervals for these new station dc supply technologies. However, because these technologies are relatively new, the maintenance activities for these station dc supplies may change over time.

What did the PSMT SDT mean by "continuity" of the dc supply?

The PSMT SDT recognizes that there are several technological advances in equipment and testing procedures that allow the owner to choose how to verify that a battery string is free of open circuits. The term "continuity" was introduced into the standard to allow the owner to choose how to verify continuity (no open circuits) of a battery set by various methods, and not to limit the owner to other conventional methods of showing continuity – lack of an open circuit. Continuity, as used in Table 1-4 of the standard, refers to verifying that there is a continuous current path from the positive terminal of the station battery set to the negative terminal (no open circuit). Without verifying continuity of a station battery, there is no way to determine that the station battery is available to supply dc power to the station. Whether it is caused from an open cell or a bad external connection, an open battery string will be an unavailable power source in the event of loss of the battery charger.

The current path through a station battery from its positive to its negative connection to the dc control circuits is composed of two types of elements. These path elements are the electrochemical path through each of its cells and all of the internal and external metallic connections and terminations of the batteries in the battery set. If there is loss of continuity (an open circuit) in any part of the electrochemical or metallic path, the battery set will not be available for service. In the event of the loss of the ac source or battery charger, the battery must be capable of supplying dc current, both for continuous dc loads and for tripping breakers and switches. Without continuity, the battery cannot perform this function.
At generating stations and large transmission stations where battery chargers are capable of handling the maximum current required by the Protection System, there are still problems that could potentially occur when the continuity through the connected battery is interrupted.

- Many battery chargers produce harmonics which can cause failure of dc power supplies in microprocessor-based protective relays and other electronic devices connected to station dc supply. In these cases, the substation battery serves as a filter for these

harmonics. With the loss of continuity in the battery, the filter provided by the battery is no longer present.

- Loss of electrical continuity of the station battery will cause, in most battery chargers, regardless of the battery charger's output current capability, a delayed response in full output current from the charger. Almost all chargers have an intentional one- to two-second delay to switch from a low substation dc load current to the maximum output of the charger. This delay would cause the opening of circuit breakers to be delayed, which could violate system performance standards.

Monitoring of the station dc supply voltage will not indicate that there is a problem with the dc current path through the battery, unless the battery charger is taken out of service. At that time, a break in the continuity of the station battery current path will be revealed because there will be no voltage on the station dc circuitry. This particular test method, while proving battery continuity, may not be acceptable to all installations.

Although the standard prescribes what must be accomplished during the maintenance activity, it does not prescribe how the maintenance activity should be accomplished. There are several methods that can be used to verify the electrical continuity of the battery. These are not the only possible methods, simply a sampling of some methods:

- One method is to measure that there is current flowing through the battery itself by a simple clamp on milliamp-range ammeter. A battery is always either charging or discharging. Even when a battery is charged, there is still a measurable float charge current that can be detected to verify that there is continuity in the electrical path through the battery.
- A simple test for continuity is to remove the battery charger from service and verify that the battery provides voltage and current to the dc system. However, the behavior of the various dc-supplied equipment in the station should be considered before using this approach.
- Manufacturers of microprocessor-controlled battery chargers have developed methods for their equipment to periodically (or continuously) test for battery continuity. For example, one manufacturer periodically reduces the float voltage on the battery until current from the battery to the dc load can be measured to confirm continuity.
- Applying test current (as in some ohmic testing devices, or devices for locating dc grounds) will provide a current that when measured elsewhere in the string, will prove that the circuit is continuous.
- Internal ohmic measurements of the cells and units of lead-acid batteries (VRLA & VLA) can detect lack of continuity within the cells of a battery string; and when used in conjunction with resistance measurements of the battery's external connections, can prove continuity. Also some methods of taking internal ohmic measurements, by their very nature, can prove the continuity of a battery string without having to use the results of resistance measurements of the external connections.
- Specific gravity tests can infer continuity because, without continuity, there could be no charging occurring; and if there is no charging, then specific gravity will go down below acceptable levels.

No matter how the electrical continuity of a battery set is verified, it is a necessary maintenance activity that must be performed at the intervals prescribed by Table 1-4 to insure that the station dc supply has a path that can provide the required current to the Protection System at all times.

When should I check the station batteries to see if they have sufficient energy to perform as manufactured?

The answer to this question depends on the type of battery (valve-regulated lead-acid, vented lead-acid, or nickel-cadmium) and the maintenance activity chosen.

For example, if you have a valve-regulated lead-acid (VRLA) station battery, and you have chosen to evaluate the measured cell/unit internal ohmic values to the battery cell's baseline, you will have to perform verification at a maximum maintenance interval of no greater than every six months. While this interval might seem to be quite short, keep in mind that the six-month interval is important for VRLA batteries; this interval provides an accumulation of data that better shows when a VRLA battery is incapable of performing as manufactured.

If, for a VRLA station battery, you choose to conduct a performance capacity test on the entire station battery as the maintenance activity, then you will have to perform verification at a maximum maintenance interval of no greater than every three calendar years.

How is a baseline established for cell/unit internal ohmic measurements?

Establishment of cell/unit internal ohmic baseline measurements should be completed when lead-acid batteries are newly installed. To ensure that the baseline ohmic cell/unit values are most indicative of the station battery's ability to perform as manufactured, they should be made at some point in time after the installation to allow the cell chemistry to stabilize after the initial freshening charge. An accepted industry practice for establishing baseline values is after six-months of installation, with the battery fully charged and in service. However, it is recommended that each owner, when establishing a baseline, should consult the battery manufacturer for specific instructions on establishing an ohmic baseline for their product, if available.

When internal ohmic measurements are taken, the same make/model test equipment should be used to establish the baseline and used for the future trending of the cells internal ohmic measurements because of variances in test equipment and the type of ohmic measurement used by different manufacturer's equipment. Keep in mind that one manufacturer's "Conductance" test equipment does not produce similar results as another manufacturer's "Conductance" test equipment, even though both manufacturers have produced "Ohmic" test equipment. Therefore, for meaningful results to an established baseline, the same make/model of instrument should be used.

For all new installations of valve-regulated lead-acid (VRLA) batteries and vented lead-acid (VLA) batteries, where trending of the cells internal ohmic measurements to a baseline are to be used to determine the ability of the station battery to perform as manufactured, the establishment of the baseline, as described above, should be followed at the time of installation to insure the most accurate trending of the cell/unit. However, often for older VRLA batteries, the owners of the station batteries have not established a baseline at installation. Also for owners of VLA batteries who want to establish a maintenance activity which requires trending of measured ohmic values to a baseline, there was typically no baseline established at installation of the station battery to trend to.

To resolve the problem of the unavailability of baseline internal ohmic measurements for the individual cell/unit of a station battery, many manufacturers of internal ohmic measurement devices have established libraries of baseline values for VRLA and VLA batteries using their testing device. Also, several of the battery manufacturers have libraries of baselines for their products that can be used to trend to. However, it is important that when using battery manufacturer-supplied data that it is verified that the baseline readings to be used were taken with the same ohmic testing device that will be used for future measurements (for example "Conductance Readings" from one manufacturer's test equipment do not correlate to "Impedance Readings" from a different manufacturer's test equipment). Although many manufacturers may have provided baseline values, which will allow trending of the internal ohmic measurements over the remaining life of a station battery, these baselines are not the actual cell/unit measurements for the battery being trended. It is important to have a baseline tailored to the station battery to more accurately use the tool of ohmic measurement trending. That more customized baseline can only be created by following the establishment of a baseline for each cell/unit at the time of installation of the station battery.

Why determine the State of Charge?

Even though there is no present requirement to check the state of charge of a battery, it can be a very useful tool in determining the overall condition of a battery system. The following discussions are offered as a general reference.

When a battery is fully charged, the battery is available to deliver its existing capacity. As a battery is discharged, its ability to deliver its maximum available capacity is diminished. It is necessary to determine if the state of charge has dropped to an unacceptable level.

What is State of Charge and how can it be determined in a station battery?

The state of charge of a battery refers to the ratio of residual capacity at a given instant to the maximum capacity available from the battery. When a battery is fully charged, the battery is available to deliver its existing capacity. As a battery is discharged, its ability to deliver its maximum available capacity is diminished. Knowing the amount of energy left in a battery compared with the energy it had when it was fully charged gives the user an indication of how much longer a battery will continue to perform before it needs recharging.

For vented lead-acid (VLA) batteries which use accessible liquid electrolyte, a hydrometer can be used to test the specific gravity of each cell as a measure of its state of charge. The hydrometer depends on measuring changes in the weight of the active chemicals. As the battery discharges, the active electrolyte, sulfuric acid, is consumed and the concentration of the sulfuric acid in water is reduced. This, in turn, reduces the specific gravity of the solution in direct proportion to the state of charge. The actual specific gravity of the electrolyte can, therefore, be used as an indication of the state of charge of the battery. Hydrometer readings may not tell the whole story, as it takes a while for the acid to get mixed up in the cells of a VLA battery. If measured right after charging, you might see high specific gravity readings at the top of the cell, even though it is much less at the bottom. Conversely, if taken shortly after adding water to the cell, the specific gravity readings near the top of the cell will be lower than those at the bottom.

Nickel-cadmium batteries, where the specific gravity of the electrolyte does not change during battery charge and discharge, and valve-regulated lead-acid (VRLA) batteries, where the electrolyte is not accessible, cannot have their state of charge determined by specific gravity

readings. For these two types of batteries, and also for VLA batteries, where another method besides taking hydrometer readings is desired, the state of charge may be determined by using the battery charger and taking voltage and current readings during float and equalize (high-rate charge mode). This method is an effective means of determining when the state of charge is low and when it is approaching a fully-charged condition, which gives the assurance that the available battery capacity will be maximized.

Why determine the Connection Resistance?

High connection resistance can cause abnormal voltage drop or excessive heating during discharge of a station battery. During periods of a high rate of discharge of the station battery, a very high resistance can cause severe damage. The maintenance requirement to verify battery terminal connection resistance in Table 1-4 is established to verify that the integrity of all battery electrical connections is acceptable. This verification includes cell-to-cell (intercell) and external circuit terminations. Your method of checking for acceptable values of intercell and terminal connection resistance could be by individual readings, or a combination of the two. There are test methods presently that can read post termination resistances and resistance values between external posts. There are also test methods presently available that take a combination reading of the post termination connection resistance plus the intercell resistance value plus the post termination connection resistance value. Either of the two methods, or any other method, that can show if the adequacy of connections at the battery posts is acceptable.

Adequacy of the electrical terminations can be determined by comparing resistance measurements for all connections taken at the time of station battery's installation to the same resistance measurements taken at the maintenance interval chosen, not to exceed the maximum maintenance interval of Table 1-4. Trending of the interval measurements to the baseline measurements will identify any degradation in the battery connections. When the connection resistance values exceed the acceptance criteria for the connection, the connection is typically disassembled, cleaned, reassembled and measurements taken to verify that the measurements are adequate when compared to the baseline readings.

What conditions should be inspected for visible battery cells?

The maintenance requirement to inspect the cell condition of all station battery cells where the cells are visible is a maintenance requirement of Table 1-4. Station batteries are different from any other component in the Protection Station because they are a perishable product due to the electrochemical process which is used to produce dc electrical current and voltage. This inspection is a detailed visual inspection of the cells for abnormalities that occur in the aging process of the cell. In VLA battery visual inspections, some of the things that the inspector is typically looking for on the plates are signs of sulfation of the plates, abnormal colors (which are an indicator of sulfation or possible copper contamination) and abnormal conditions such as cracked grids. The visual inspection could look for symptoms of hydration that would indicate that the battery has been left in a completely discharged state for a prolonged period. Besides looking at the plates for signs of aging, all internal connections, such as the bus bar connection to each plate, and the connections to all posts of the battery need to be visually inspected for abnormalities. In a complete visual inspection for the condition of the cell the cell plates, separators and sediment space of each cell must be looked at for signs of deterioration. An inspection of the station battery's cell condition also includes looking at all terminal posts and cell-to-cell electric connections to ensure they are corrosion free. The case of the battery

containing the cell, or cells, must be inspected for cracks and electrolyte leaks through cracks and the post seals.

This maintenance activity cannot be extended beyond the maximum maintenance interval of Table 1-4 by a Performance-Based Maintenance Program (PBM) because of the electrochemical aging process of the station battery, nor can there be any monitoring associated with it because there must be a visual inspection involved in the activity. A remote visual inspection could possibly be done, but its interval must be no greater than the maximum maintenance interval of Table 1-4.

Why is it necessary to verify the battery string can perform as manufactured? I only care that the battery can trip the breaker, which means that the battery can perform as designed. I oversize my batteries so that even if the battery cannot perform as manufactured, it can still trip my breakers.

The fundamental answer to this question revolves around the concept of battery performance "as designed" vs. battery performance "as manufactured." The purpose of the various sections of Table 1-4 of this standard is to establish requirements for the Protection System owner to maintain the batteries, to ensure they will operate the equipment when there is an incident that requires dc power, and ensure the batteries will continue to provide adequate service until at least the next maintenance interval. To meet these goals, the correct battery has to be properly selected to meet the design parameters, and the battery has to deliver the power it was manufactured to provide.

When testing batteries, it may be difficult to determine the original design (i.e., load profile) of the dc system. This standard is not intended as a design document, and requirements relating to design are, therefore, not included.

Where the dc load profile is known, the best way to determine if the system will operate as designed is to conduct a service test on the battery. However, a service test alone might not fully determine if the battery is healthy. A battery with 50% capacity may be able to pass a service test, but the battery would be in a serious state of deterioration and could fail at some point in the near future.

To ensure that the battery will meet the required load profile and continue to meet the load profile until the next maintenance interval, the installed battery must be sized correctly (i.e., a correct design), and it must be in a good state of health. Since the design of the dc system is not within the scope of the standard, the only consistent and reliable method to ensure that the battery is in a good state of health is to confirm that it can perform as manufactured. If the battery can perform as manufactured and it has been designed properly, the system should operate properly until the next maintenance interval.

How do I verify the battery string can perform as manufactured?

Optimally, actual battery performance should be verified against the manufacturer's rating curves. The best practice for evaluating battery performance is via a performance test. However, due to both logistical and system reliability concerns, some Protection System owners prefer other methods to determine if a battery can perform as manufactured. There are several battery parameters that can be evaluated to determine if a battery can perform as manufactured. Ohmic measurements and float current are two examples of parameters that have been reported to assist in determining if a battery string can perform as manufactured.

The evaluation of battery parameters in determining battery health is a complex issue, and is not an exact science. This standard gives the user an opportunity to utilize other measured parameters to determine if the battery can perform as manufactured. It is the responsibility of the Protection System owner, however, to maintain a documented process that demonstrates the chosen parameter(s) and associated methodology used to determine if the battery string can perform as manufactured.

Whatever parameters are used to evaluate the battery (ohmic measurements, float current, float voltages, temperature, specific gravity, performance test, or combination thereof), the goal is to determine the value of the measurement (or the percentage change) at which the battery fails to perform as manufactured, or the point where the battery is deteriorating so rapidly that it will not perform as manufactured before the next maintenance interval.

This necessitates the need for establishing and documenting a baseline. A baseline may be required of every individual cell, a particular battery installation, or a specific make, model, or size of a cell. Given a consistent cell manufacturing process, it may be possible to establish a baseline number for the cell (make/model/type) and, therefore, a subsequent baseline for every installation would not be necessary. However, future installations of the same battery types should be spot-checked to ensure that your baseline remains applicable.

Consistent testing methods by trained personnel are essential. Moreover, it is essential that these technicians utilize the same make/model of ohmic test equipment each time readings are taken in order to establish a meaningful and accurate trend line against the established baseline. The type of probe and its location (post, connector, etc) for the reading need to be the same for each subsequent test. The room temperature should be recorded with the readings for each test as well. Care should be taken to consider any factors that might lead a trending program to become invalid.

Float current along with other measureable parameters can be used in lieu of or in concert with ohmic measurement testing to measure the ability of a battery to perform as manufactured. The key to using any of these measurement parameters is to establish a baseline and the point where the reading indicates that the battery will not perform as manufactured.

The establishment of a baseline may be different for various types of cells and for different types of installations. In some cases, it may be possible to obtain a baseline number from the battery manufacturer, although it is much more likely that the baseline will have to be established after the installation is complete. To some degree, the battery may still be "forming" after installation; consequently, determining a stable baseline may not be possible until several months after the battery has been in service.

The most important part of this process is to determine the point where the ohmic reading (or other measured parameter(s)) indicates that the battery cannot perform as manufactured. That point could be an absolute number, an absolute change, or a percentage change of an established baseline.

Since there are no universally-accepted repositories of this information, the Protection System owner will have to determine the value/percentage where the battery cannot perform as manufactured (heretofore referred to as a failed cell). This is the most difficult and important part of the entire process.

To determine the point where the battery fails to perform as manufactured, it is helpful to have a history of a battery type, if the data includes the parameter(s) used to evaluate the battery's ability to perform as manufactured against the actual demonstrated performance/capacity of a battery/cell.

For example, when an ohmic reading has been recorded that the user suspects is indicating a failed cell, a performance test of that cell (or string) should be conducted in order to prove/quantify that the cell has failed. Through this process, the user needs to determine the ohmic value at which the performance of the cell has dropped below 80% of the manufactured, rated performance. It is likely that there may be a variation in ohmic readings that indicates a failed cell (possibly significant). It is prudent to use the most conservative values to determine the point at which the cell should be marked for replacement. Periodically, the user should demonstrate that an “adequate” ohmic reading equates to an adequate battery performance (>80% of capacity).

Similarly, acceptance criteria for "good" and "failed" cells should be established for other parameters such as float current, specific gravity, etc., if used to determine the ability of a battery to function as designed.

What happens if I change the make/model of ohmic test equipment after the battery has been installed for a period of time?

If a user decides to switch testers, either voluntarily or because the equipment is not supported/sold any longer, the user may have to establish a new base line and new parameters that indicate when the battery no longer performs as manufactured. The user always has a choice to perform a capacity test in lieu of establishing new parameters.

What are some of the differences between lead-acid and nickel-cadmium batteries?

There is a marked difference in the aging process of lead acid and nickel-cadmium station batteries. The difference in the aging process of these two types of batteries is chiefly due to the electrochemical process of the battery type. Aging and eventual failure of lead acid batteries is due to expansion and corrosion of the positive grid structure, loss of positive plate active material, and loss of capacity caused by physical changes in the active material of the positive plates. In contrast, the primary failure of nickel-cadmium batteries is due to the gradual linear aging of the active materials in the plates. The electrolyte of a nickel-cadmium battery only facilitates the chemical reaction (it functions only to transfer ions between the positive and negative plates), but is not chemically altered during the process like the electrolyte of a lead acid battery. A lead acid battery experiences continued corrosion of the positive plate and grid structure throughout its operational life while a nickel-cadmium battery does not.

Changes to the properties of a lead acid battery when periodically measured and trended to a baseline, can indicate aging of the grid structure, positive plate deterioration, or changes in the active materials in the plate.

Because of the clear differences in the aging process of lead acid and nickel-cadmium batteries, there are no significantly measurable properties of the nickel-cadmium battery that can be measured at a periodic interval and trended to determine aging. For this reason, Table 1-4(c) (Protection System Station dc supply Using nickel-cadmium [NiCad] Batteries) only specifies one

minimum maintenance activity and associated maximum maintenance interval necessary to verify that the station battery can perform as manufactured by evaluating cell/unit measurements indicative of battery performance against the station battery baseline. This maintenance activity is to conduct a performance or modified performance capacity test of the entire battery bank.

Why in Table 1-4 of PRC-005-2 is there a maintenance activity to inspect the structural intergrity of the battery rack?

The purpose of this inspection is to verify that the battery rack is correctly installed and has no deterioration that could weaken its structural integrity.
Because the battery rack is specifically manufactured for the battery that is mounted on it, weakening of its structural members by rust or corrosion can physically jeopardize the battery.

What is required to comply with the "Unintentional dc Grounds" requirement?

In most cases, the first ground that appears on a battery is not a problem. It is the unintentional ground that appears on the opposite pole that becomes problematic. Even then many systems are designed to operate favorably under some unintentional DC ground situations. It is up to the owner of the Protection System to determine if corrective actions are needed on detected unintentional DC grounds. The standard merely requires that a check be made for the existence of Unintentional DC Grounds. Obviously, a "check-off" of some sort will have to be devised by the inspecting entity to document that a check is routinely done for Unintentional DC Grounds because of the possible consequences to the Protection System.

Where the standard refers to "all cells," is it sufficient to have a documentation method that refers to "all cells," or do we need to have separate documentation for every cell? For example, do I need 60 individual documented check-offs for good electrolyte level, or would a single check-off per bank be sufficient?

A single check-off per battery bank is sufficient for documentation, as long as the single check-off attests to checking all cells/units.

Does this standard refer to Station batteries or all batteries; for example, Communications Site Batteries?

This standard refers to Station Batteries. The drafting team does not believe that the scope of this standard refers to communications sites. The batteries covered under PRC-005-2 are the batteries that supply the trip current to the trip coils of the interrupting devices that are a part of the Protection System. The SDT believes that a loss of power to the communications systems at a remote site would cause the communications systems associated with protective relays to alarm at the substation. At this point, the corrective actions can be initiated.

What are cell/unit internal ohmic measurements?

With the introduction of Valve-Regulated Lead-Acid (VRLA) batteries to station dc supplies in the 1980's several of the standard maintenance tools that are used on Vented Lead-Acid (VLA) batteries were unable to be used on this new type of lead-acid battery to determine its state of health. The only tools that were available to give indication of the health of these new VRLA batteries were voltage readings of the total battery voltage, the voltage of the individual cells and periodic discharge tests.

In the search for a tool for determining the health of a VRLA battery several manufacturers studied the electrical model of a lead acid battery's current path through its cell. The overall battery current path consists of resistance and inductive and capacitive reactance. The

inductive reactance in the current path through the battery is so minuscule when compared to the huge capacitive reactance of the cells that it is often ignored in most circuit models of the battery cell. Taking the basic model of a battery cell manufacturers of battery test equipment have developed and marketed testing devices to take measurements of the current path to detect degradation in the internal path through the cell.

In the battery industry, these various types of measurements are referred to as ohmic measurements. Terms used by the industry to describe ohmic measurements are ac conductance, ac impedance, and dc resistance. They are defined by the test equipment providers and IEEE and refer to the method of taking ohmic measurements of a lead acid battery. For example, in one manufacturer's ac conductance equipment measurements are taken by applying a voltage of a known frequency and amplitude across a cell or battery unit and observing the ac current flow it produces in response to the voltage. A manufacturer of an ac impedance meter measures ac current of a known frequency and amplitude that is passed through the whole battery string and determines the impedances of each cell or unit by measuring the resultant ac voltage drop across them. On the other hand, dc resistance of a cell is measured by a third manufacturer's equipment by applying a dc load across the cell or unit and measuring the step change in both the voltage and current to calculate the internal dc resistance of the cell or unit.

It is important to note that because of the rapid development of the market for ohmic measurement devices, there were no standards developed or used to mandate the test signals used in making ohmic measurements. Manufacturers using proprietary methods and applying different frequencies and magnitudes for their signals have developed a diversity of measurement devices. This diversity in test signals coupled with the three different types of ohmic measurements techniques (impedance conductance and resistance) make it impossible to always get the same ohmic measurement for a cell with different ohmic measurement devices. However, IEEE has recognized the great value for choosing one device for ohmic measurement, no matter who makes it or the method to calculate the ohmic measurement. The only caution given by IEEE and the battery manufacturers is that when trending the cells of a lead acid station battery consistent ohmic measurement devices should be used to establish the baseline measurement and to trend the battery set for its entire life.

For VRLA batteries both IEEE Standard 1188 (Maintenance, Testing and Replacement of VRLA Batteries) and IEEE Standard 1187 (Installation Design and Installation of VRLA Batteries) recognize the importance of the maintenance activity of establishing a baseline for "cell/unit internal ohmic measurements (impedance, conductance and resistance)" and trending them at frequent intervals over the life of the battery. There are extensive discussions about the need for taking these measurements in these standards. IEEE Standard 1188 requires taking internal ohmic values as described in Annex C4 during regular inspections of the station battery. For VRLA batteries IEEE Standard 1188 in talking about the necessity of establishing a baseline and trending it over time says, "…depending on the degree of change a performance test, cell replacement or other corrective action may be necessary…" (IEEE std 1188-2005, C.4 page 18).

For VLA batteries IEEE Standard 484 (Installation of VLA batteries) gives several guidelines about establishing baseline measurements on newly installed lead acid stationary batteries. The standard also discusses the need to look for significant changes in the ohmic measurements, the caution that measurement data will differ with each type of model of instrument used, and lists a number of factors that affect ohmic measurements.

At the beginning of the 21st century, EPRI conducted a series of extensive studies to determine the relationship of internal ohmic measurements to the capacity of a lead acid battery cell. The studies indicated that internal ohmic measurements were in fact a good indicator of a lead acid battery cell's capacity, but because users often were only interested in the total station battery capacity and the technology does not precisely predict overall battery capacity, if a user only needs "an accurate measure of the overall battery capacity," they should "perform a battery capacity test."

Prior to the EPRI studies some large and small companies which owned and maintained station dc supplies in NERC Protection Systems developed maintenance programs where trending of ohmic measurements of cells/units of the station's battery became the maintenance activity for determining if the station battery could perform as manufactured. By evaluation of the trending of the ohmic measurements over time, the owner could track the performance of the individual components of the station battery and determine if a total station battery or components of it required capacity testing, removal, replacement or in many instances replacement of the entire station battery. By taking this condition based approach these owners have eliminated having to perform capacity testing at prescribed intervals to determine if a battery needs to be replaced and are still able to effectively determine if a station battery can perform as manufactured.

My VRLA batteries have multiple-cells within an individual battery jar (or unit); how am I expected to comply with the cell-to-cell ohmic measurement requirements on these units that I cannot get to?

Measurement of cell/unit (not all batteries allow access to "individual cells" some "units" or jars may have multiple cells within a jar) internal ohmic values of all types of lead acid batteries where the cells of the battery are not visible is a station dc supply maintenance activity in Table 1-4. In cases where individual cells in a multi-cell unit are in accessible, an ohmic measurement of the entire unit may be made.

I have a concern about my batteries being used to support additional auxiliary loads beyond my protection control systems in a generation station. Is ohmic measurement testing sufficient for my needs?

While this standard is focused on addressing requirements for Protection Systems, if batteries are used to service other load requirements beyond that of Protection Systems (e.g. pumps, valves, inverter loads), the functional entity may consider additional testing to confirm that the capacity of the battery is sufficient to support all loads.

Why verify voltage?

There are two required maintenance activities associated with verification of dc voltages in Table 1-4. These two required activities are to verify station dc supply voltage and float voltage of the battery charger, and have different maximum maintenance intervals. Both of these voltage verification requirements relate directly to the battery charger maintenance.

The verification of the dc supply voltage is simply an observation of battery voltage to prove that the charger has not been lost or is not malfunctioning; a reading taken from the battery charger panel meter or even SCADA values of the dc voltage could be some of the ways that one could satisfy the requirements. Low battery voltage below float voltage indicates that the battery may be on discharge and, if not corrected, the station battery could discharge down to some extremely low value that will not operate the Protection System. High voltage, close to or

above the maximum allowable dc voltage for equipment connected to the station dc supply indicates the battery charger may be malfunctioning by producing high dc voltage levels on the Protection System. If corrective actions are not taken to bring the high voltage down, the dc power supplies and other electronic devices connected to the station dc supply may be damaged. The maintenance activity of verifying the float voltage of the battery charger is not to prove that a charger is lost or producing high voltages on the station dc supply, but rather to prove that the charger is properly floating the battery within the proper voltage limits. As above, there are many ways that this requirement can be met.

Why check for the electrolyte level?

In vented lead-acid (VLA) and nickel-cadmium (NiCad) batteries the visible electrolyte level must be checked as one of the required maintenance activities that must be performed at an interval that is equal to or less than the maximum maintenance interval of Table 1-4. Because the electrolyte level in valve-regulated lead-acid (VRLA) batteries cannot be observed, there is no maintenance activity listed in Table 1-4 of the standard for checking the electrolyte level. Low electrolyte level of any cell of a VLA or NiCad station battery is a condition requiring correction. Typically, the electrolyte level should be returned to an acceptable level for both types of batteries (VLA and NiCad) by adding distilled or other approved-quality water to the cell.

Often people confuse the interval for watering all cells required due to evaporation of the electrolyte in the station battery cells with the maximum maintenance interval required to check the electrolyte level. In many of the modern station batteries, the jar containing the electrolyte is so large with the band between the high and low electrolyte level so wide that normal evaporation which would require periodic watering of all cells takes several years to occur. However, because loss of electrolyte due to cracks in the jar, overcharging of the station battery, or other unforeseen events can cause rapid loss of electrolyte; the shorter maximum maintenance intervals for checking the electrolyte level are required. A low level of electrolyte in a VLA battery cell which exposes the tops of the plates can cause the exposed portion of the plates to accelerated sulfation resulting in loss of cell capacity. Also, in a VLA battery where the electrolyte level goes below the end of the cell withdrawal tube or filling funnel, gasses can exit the cell by the tube instead of the flame arrester and present an explosion hazard.

What are the parameters that can be evaluated in Tables 1-4(a) and 1-4(b)?

The most common parameter that is periodically trended and evaluated by industry today to verify that the station battery can perform as manufactured is internal ohmic cell/unit measurements.

In the mid 1990s, several large and small utilities began developing maintenance and testing programs for Protection System station batteries using a condition based maintenance approach of trending internal ohmic measurements to each station battery cell's baseline value. Battery owners use the data collected from this maintenance activity to determine (1) when a station battery requires a capacity test (instead of performing a capacity test on a predetermined, prescribed interval), (2) when an individual cell or battery unit should be replaced, or (3) based on the analysis of the trended data, if the station battery should be replaced without performing a capacity test.

Other examples of measurable parameters that can be periodically trended and evaluated for lead acid batteries are cell voltage, float current, connection resistance. However, periodically

trending and evaluating cell/unit Ohmic measurements are the most common battery/cell parameters that are evaluated by industry to verify a lead acid battery string can perform as manufactured.

Why does it appear that there are two maintenance activities in Table 1-4(b) (for VRLA batteries) that appear to be the same activity and have the same maximum maintenance interval?

There are two different and distinct reasons for doing almost the same maintenance activity at the same interval for valve-regulated lead-acid (VRLA) batteries. The first similar activity for VRLA batteries (Table 1-4(b)) that has the same maximum maintenance interval is to "measure battery cell/unit internal ohmic values." Part of the reason for this activity is because the visual inspection of the cell condition is unavailable for VRLA batteries. Besides the requirement to measure the internal ohmic measurements of VRLA batteries to determine the internal health of the cell, the maximum maintenance interval for this activity is significantly shorter than the interval for vented lead-acid (VLA) due to some unique failure modes for VRLA batteries. Some of the potential problems that VRLA batteries are susceptible to that do not affect VLA batteries are thermal runaway, cell dry-out, and cell reversal when one cell has a very low capacity.

The other similar activity listed in Table 1-4(b) is "…verify that the station battery can perform as manufactured by evaluating the measured cell/unit measurements indicative of battery performance (e.g. internal ohmic values) against the station battery baseline." This activity allows an owner the option to choose between this activity with its much shorter maximum maintenance interval or the longer maximum maintenance interval for the maintenance activity to "Verify that the station battery can perform as manufactured by conducting a performance or modified performance capacity test of the entire battery bank."

For VRLA batteries, there are two drivers for internal ohmic readings. The first driver is for a means to trend battery life. Trending against the baseline of VRLA cells in a battery string is essential to determine the approximate state of health of the battery. Ohmic measurement testing may be used as the mechanism for measuring the battery cells. If all the cells in the string exhibit a consistent trend line and that trend line has not risen above a specific deviation (e.g. 30%) over baseline, then a judgment can be made that the battery is still in a reasonably good state of health and able to 'perform as manufactured.' It is essential that the specific deviation mentioned above is based on data (test or otherwise) that correlates the ohmic readings for a specific battery/tester combination to the health of the battery. This is the intent of the "perform **as** manufactured six-month test" at Row 4 on Table 1-4b.

The second big driver is VRLA batteries tendency for thermal runaway. This is the intent of the "thermal runaway test" at Row 2 on Table 1-4b. In order to detect a cell in thermal runaway, you need not necessarily have a formal trending program. When a single cell/unit changes significantly or significantly varies from the other cells (e.g. a doubling of resistance/impedance or a 50% decrease in conductance), there is a high probability that the cell/unit/string needs to be replaced as soon as possible. In other words, if the battery is 10 years old and all the cells have approached a significant change in ohmic values over baseline, then you have a battery which is approaching end of life. You need to get ready to buy a new battery, but you do not have to worry about an impending catastrophic failure. On the other hand, if the battery is five years old and you have one cell that has a markedly different ohmic reading than all the other cells, then you need to be worried that this cell is in thermal runaway and catastrophic failure is imminent.

If an entity elects to use a capacity test rather than a cell ohmic value trending program, this does not eliminate the need to be concerned about thermal runaway – the entity still needs to do the six-month readings and look for cells which are outliers in the string but they need not trend results against the factory/as new baseline. Some entities will not mind the extra administrative burden of having the ongoing trending program against baseline - others would rather just do the capacity test and not have to trend the data against baseline. Nonetheless, all entities must look for ohmic outliers on a six-month basis.

It is possible to accomplish both tasks listed (trend testing for capability and testing for thermal runaway candidates) with the very same ohmic test. It becomes an analysis exercise of watching the trend from baselines and watching for the oblique cell measurement.

15.5 Associated communications equipment (Table 1-2)

The equipment used for tripping in a communications-assisted trip scheme is a vital piece of the trip circuit. Remote action causing a local trip can be thought of as another parallel trip path to the trip coil that must be tested. Besides the trip output and wiring to the trip coil(s), there is also a communications medium that must be maintained. Newer technologies now exist that achieve communications-assisted tripping without the conventional wiring practices of older technology. For example, older technologies may have included Frequency Shift Key methods. This technology requires that guard and trip levels be maintained. The actual tripping path(s) to the trip coil(s) may be tested as a parallel trip path within the dc control circuitry tests. Emerging technologies transfer digital information over a variety of carrier mediums that are then interpreted locally as trip signals. The requirements apply to the communicated signal needed for the proper operation of the protective relay trip logic or scheme. Therefore, this standard is applied to equipment used to convey both trip signals (permissive or direct) and block signals.

It was the intent of this standard to require that a test be performed on any communications-assisted trip scheme, regardless of the vintage of technology. The essential element is that the tripping (or blocking) occurs locally when the remote action has been asserted; or that the tripping (or blocking) occurs remotely when the local action is asserted. Note that the required testing can still be done within the concept of testing by overlapping segments. Associated communications equipment can be (but is not limited to) testing at other times and different frequencies as the protective relays, the individual trip paths and the affected circuit interrupting devices.

Some newer installations utilize digital signals over fiber-optics from the protective relays in the control house to the circuit interrupting device in the yard. This method of tripping the circuit breaker, even though it might be considered communications, must be maintained per the dc control circuitry maintenance requirements.

15.5.1 Frequently Asked Questions:

What are some examples of mechanisms to check communications equipment functioning?

For unmonitored Protection Systems, various types of communications systems will have different facilities for on-site integrity checking to be performed at least every four months during a substation visit. Some examples are, but not limited to:

- On-off power-line carrier systems can be checked by performing a manual carrier keying test between the line terminals, or carrier check-back test from one terminal.
- Systems which use frequency-shift communications with a continuous guard signal (over a telephone circuit, analog microwave system, etc.) can be checked by observing for a loss-of-guard indication or alarm. For frequency-shift power-line carrier systems, the guard signal level meter can also be checked.
- Hard-wired pilot wire line Protection Systems typically have pilot-wire monitoring relays that give an alarm indication for a pilot wire ground or open pilot wire circuit loop.
- Digital communications systems typically have a data reception indicator or data error indicator (based on loss of signal, bit error rate, or frame error checking).

For monitored Protection Systems, various types of communications systems will have different facilities for monitoring the presence of the communications channel, and activating alarms that can be monitored remotely. Some examples are, but not limited to:

- On-off power-line carrier systems can be shown to be operational by automated periodic power-line carrier check-back tests with remote alarming of failures.
- Systems which use a frequency-shift communications with a continuous guard signal (over a telephone circuit, analog microwave system, etc.) can be remotely monitored with a loss-of-guard alarm or low signal level alarm.
- Hard-wired pilot wire line Protection Systems can be monitored by remote alarming of pilot-wire monitoring relays.
- Digital communications systems can activate remotely monitored alarms for data reception loss or data error indications.
- Systems can be queried for the data error rates.

For the highest degree of monitoring of Protection Systems, the communications system must monitor all aspects of the performance and quality of the channel that show it meets the design performance criteria, including monitoring of the channel interface to protective relays.

- In many communications systems signal quality measurements, including signal-to-noise ratio, received signal level, reflected transmitter power or standing wave ratio, propagation delay, and data error rates are compared to alarm limits. These alarms are connected for remote monitoring.
- Alarms for inadequate performance are remotely monitored at all times, and the alarm communications system to the remote monitoring site must itself be continuously monitored to assure that the actual alarm status at the communications equipment location is continuously being reflected at the remote monitoring site.

What is needed for the four-month inspection of communications-assisted trip scheme equipment?

The four-month inspection applies to unmonitored equipment. An example of compliance with this requirement might be, but is not limited to:

With each site visit, check that the equipment is free from alarms; check any metered signal levels, and that power is still applied. While this might be explicit for a particular type of equipment (i.e., FSK equipment), the concept should be that the entity verify that the communications equipment that is used in a Protection System is operable through a cursory inspection and site visit. This site visit can be eliminated on this particular example if the FSK equipment had a monitored alarm on Loss of Guard. Blocking carrier systems with auto checkbacks will present an alarm when the channel fails allowing a visual indication. With no auto checkback, the channel integrity will need to be verified by a manual checkback or a two ended signal check. This check could also be eliminated by bring the auto checkback failure alarm to the monitored central location.

Does a fiber optic I/O scheme used for breaker tripping or control within a station, for example - transmitting a trip signal or control logic between the control house and the breaker control cabinet, constitute a communications system?

This equipment is presently classified as being part of the Protection System Control Circuitry and tested per the portions of Table 1 applicable to Protection System Control Circuitry, rather than those portions of the table applicable to communications equipment.

What is meant by "Channel" and "Communications Systems" in Table 1-2?

The transmission of logic or data from a relay in one station to a relay in another station for use in a pilot relay scheme will require a communications system of some sort. Typical relay communications systems use fiber optics, leased audio channels, power line carrier, and microwave. The overall communications system includes the channel and the associated communications equipment.

This standard refers to the "channel" as the medium between the transmitters and receivers in the relay panels such as a leased audio or digital communications circuit, power line and power line carrier auxiliary equipment, and fiber. The dividing line between the channel and the associated communications equipment is different for each type of media.

Examples of the Channel:

- Power Line Carrier (PLC) - The PLC channel starts and ends at the PLC transmitter and receiver output unless there is an internal hybrid. The channel includes the external hybrids, tuners, wave traps and the power line itself.
- Microwave –The channel includes the microwave multiplexers, radios, antennae and associated auxiliary equipment. The audio tone and digital transmitters and receivers in the relay panel are the associated communications equipment.
- Digital/Audio Circuit – The channel includes the equipment within and between the substations. The auxiliary communications equipment includes the relay panel transmitters and receivers and the interface equipment in the relays.

- Fiber Optic – The channel starts at the fiber optic connectors on the fiber distribution panel at the local station and goes to the fiber optic distribution panel at the remote substation. The jumpers that connect the relaying equipment to the fiber distribution panel and any optical-electrical signal format converters are the associated communications equipment

Figure 1-2, A-1 and A-2 at the end of this document show good examples of the communications channel and the associated communications equipment.

In Table 1-2, the Maintenance Activities section of the Protective System Communications Equipment and Channels refers to the quality of the channel meeting "performance criteria." What is meant by performance criteria?

Protection System communications channels must have a means of determining if the channel and communications equipment is operating normally. If the channel is not operating normally, an alarm will be indicated. For unmonitored systems, this alarm will probably be on the panel. For monitored systems, the alarm will be transmitted to a remote location.

Each entity will have established a nominal performance level for each Protection System communications channel that is consistent with proper functioning of the Protection System. If that level of nominal performance is not being met, the system will go into alarm. Following are some examples of Protection System communications channel performance measuring:

- For direct transfer trip using a frequency shift power line carrier channel, a guard level monitor is part of the equipment. A normal receive level is established when the system is calibrated and if the signal level drops below an established level, the system will indicate an alarm.
- An on-off blocking signal over power line carrier is used for directional comparison blocking schemes on transmission lines. During a Fault, block logic is sent to the remote relays by turning on a local transmitter and sending the signal over the power line to a receiver at the remote end. This signal is normally off so continuous levels cannot be checked. These schemes use check-back testing to determine channel performance. A predetermined signal sequence is sent to the remote end and the remote end decodes this signal and sends a signal sequence back. If the sending end receives the correct information from the remote terminal, the test passes and no alarm is indicated. Full power and reduced power tests are typically run. Power levels for these tests are determined at the time of calibration.
- Pilot wire relay systems use a hardwire communications circuit to communicate between the local and remote ends of the protective zone. This circuit is monitored by circulating a dc current between the relay systems. A typical level may be 1 mA. If the level drops below the setting of the alarm monitor, the system will indicate an alarm.
- Modern digital relay systems use data communications to transmit relay information to the remote end relays. An example of this is a line current differential scheme commonly used on transmission lines. The protective relays communicate current magnitude and phase information over the communications path to determine if the Fault is located in the protective zone. Quantities such as digital packet loss, bit error rate and channel delay are monitored to determine the quality of the channel. These

limits are determined and set during relay commissioning. Once set, any channel quality problems that fall outside the set levels will indicate an alarm.

The previous examples show how some protective relay communications channels can be monitored and how the channel performance can be compared to performance criteria established by the entity. This standard does not state what the performance criteria will be; it just requires that the entity establish nominal criteria so Protection System channel monitoring can be performed.

How is the performance criteria of Protection System communications equipment involved in the maintenance program?

An entity determines the acceptable performance criteria, depending on the technology implemented. If the communications channel performance of a Protection System varies from the pre-determined performance criteria for that system, then these results should be investigated and resolved.

How do I verify the A/D converters of microprocessor-based relays?

There are a variety of ways to do this. Two examples would be: using values gathered via data communications and automatically comparing these values with values from other sources, or using groupings of other measurements (such as vector summation of bus feeder currents) for comparison. Many other methods are possible.

15.6 Alarms (Table 2)

In addition to the tables of maintenance for the components of a Protection System, there is an additional table added for alarms. This additional table was added for clarity. This enabled the common alarm attributes to be consolidated into a single spot, and, thus, make it easier to read the Tables 1-1 through 1-5. The alarms need to arrive at a site wherein a corrective action can be initiated. This could be a control room, operations center, etc. The alarming mechanism can be a standard alarming system or an auto-polling system; the only requirement is that the alarm be brought to the action-site within 24 hours. This effectively makes manned-stations equivalent to monitored stations. The alarm of a monitored point (for example a monitored trip path with a lamp) in a manned-station now makes that monitored point eligible for monitored status. Obviously, these same rules apply to a non-manned-station, which is that if the monitored point has an alarm that is auto-reported to the operations center (for example) within 24 hours, then it too is considered monitored.

15.6.1 Frequently Asked Questions:

Why are there activities defined for varying degrees of monitoring a Protection System component when that level of technology may not yet be available?

There may already be some equipment available that is capable of meeting the highest levels of monitoring criteria listed in the Tables. However, even if there is no equipment available today that can meet this level of monitoring the standard establishes the necessary requirements for when such equipment becomes available. By creating a roadmap for development, this provision makes the standard technology neutral. The Standard Drafting Team wants to avoid the need to revise the standard in a few years to accommodate technology advances that may be coming to the industry.

Does a fail-safe "form b" contact that is alarmed to a 24/7 operation center classify as an alarm path with monitoring?

If the fail-safe "form-b" contact that is alarmed to a 24/7 operation center causes the alarm to activate for failure of any portion of the alarming path from the alarm origin to the 24/7 operations center, then this can be classified as an alarm path with monitoring.

15.7 Distributed UFLS and Distributed UVLS Systems (Table 3)

Distributed UFLS and distributed UVLS systems have their maintenance activities documented in Table 3 due to their distributed nature allowing reduced maintenance activities and extended maximum maintenance intervals. Relays have the same maintenance activities and intervals as Table 1-1. Voltage and current-sensing devices have the same maintenance activity and interval as Table 1-3. DC systems need only have their voltage read at the relay every 12 years. Control circuits have the following maintenance activities every 12 years:

- Verify the trip path between the relay and lock-out and/or auxiliary tripping device(s).
- Verify operation of any lock-out and/or auxiliary tripping device(s) used in the trip circuit.
- No verification of trip path required between the lock-out (and/or auxiliary tripping device) and the non-BES interrupting device.
- No verification of trip path required between the relay and trip coil for circuits that have no lock-out and/or auxiliary tripping device(s).
- No verification of trip coil required.

No maintenance activity is required for associated communication systems for distributed UFLS and distributed UVLS schemes.

Non-BES interrupting devices that participate in a distributed UFLS or distributed UVLS scheme are excluded from the tripping requirement, and part of the control circuit test requirement; however, the part of the trip path control circuitry between the Load-Shed relay and lock-out or auxiliary tripping relay must be tested at least once every 12 years. In the case where there is no lock-out or auxiliary tripping relay used in a distributed UFLS or UVLS scheme which is not part of the BES, there is no control circuit test requirement. There are many circuit interrupting devices in the distribution system that will be operating for any given under-frequency event that requires tripping for that event. A failure in the tripping action of a single distributed system circuit breaker (or non-BES equipment interruption device) will be far less significant than, for example, any single transmission Protection System failure, such as a failure of a bus differential lock-out relay. While many failures of these distributed system circuit breakers (or non-BES equipment interruption device) could add up to be significant, it is also believed that many circuit breakers are operated often on just Fault clearing duty; and, therefore, these circuit breakers are operated at least as frequently as any requirements that appear in this standard.

There are times when a Protection System component will be used on a BES device, as well as a non-BES device, such as a battery bank that serves both a BES circuit breaker and a non-BES interrupting device used for UFLS. In such a case, the battery bank (or other Protection System component) will be subject to the Tables of the standard because it is used for the BES.

15.7.1 Frequently Asked Questions:

The standard reaches further into the distribution system than we would like for UFLS and UVLS

While UFLS and UVLS equipment are located on the distribution network, their job is to protect the Bulk Electric System. This is not beyond the scope of NERC's 215 authority.

FPA section 215(a) definitions section defines bulk power system as: "(A) facilities and control Systems necessary for operating an interconnected electric energy transmission network (or any portion thereof)." That definition, then, is limited by a later statement which adds the term bulk power system "…does not include facilities used in the local distribution of electric energy." Also, Section 215 also covers users, owners, and operators of bulk power Facilities.

UFLS and UVLS (when the UVLS is installed to prevent system voltage collapse or voltage instability for BES reliability) are not "used in the local distribution of electric energy," despite their location on local distribution networks. Further, if UFLS/UVLS Facilities were not covered by the reliability standards, then in order to protect the integrity of the BES during under-frequency or under-voltage events, that Load would have to be shed at the Transmission bus to ensure the Load-generation balance and voltage stability is maintained on the BES.

15.8 Examples of Evidence of Compliance

To comply with the requirements of this standard, an entity will have to document and save evidence. The evidence can be of many different forms. The Standard Drafting Team recognizes that there are concurrent evidence requirements of other NERC standards that could, at times, fulfill evidence requirements of this Standard.

15.8.1 Frequently Asked Questions:

What forms of evidence are acceptable?

Acceptable forms of evidence, as relevant for the requirement being documented include, but are not limited to:

- Process documents or plans
- Data (such as relay settings sheets, photos, SCADA, and test records)
- Database lists, records and/or screen shots that demonstrate compliance information
- Prints, diagrams and/or schematics
- Maintenance records
- Logs (operator, substation, and other types of log)
- Inspection forms
- Mail, memos, or email proving the required information was exchanged, coordinated, submitted or received
- Check-off forms (paper or electronic)
- Any record that demonstrates that the maintenance activity was known, accounted for, and/or performed.

If I replace a failed Protection System component with another component, what testing do I need to perform on the new component?

In order to reset the Table 1 maintenance interval for the replacement component, all relevant Table 1 activities for the component should be performed.

I have evidence to show compliance for PRC-016 ("Special Protection System Misoperation"). Can I also use it to show compliance for this Standard, PRC-005-2?

Maintaining evidence for operation of Special Protection Systems could concurrently be utilized as proof of the operation of the associated trip coil (provided one can be certain of the trip coil involved). Thus, the reporting requirements that one may have to do for the Misoperation of a Special Protection Scheme under PRC-016 could work for the activity tracking requirements under this PRC-005-2.

I maintain Disturbance records which show Protection System operations. Can I use these records to show compliance?

These records can be concurrently utilized as dc trip path verifications, to the degree that they demonstrate the proper function of that dc trip path.

I maintain test reports on some of my Protection System components. Can I use these test reports to show that I have verified a maintenance activity?

Yes.

References

1. Protection System Maintenance: A Technical Reference. Prepared by the System Protection and Controls Task Force of the NERC Planning Committee. Dated September 13, 2007.

2. "Predicating The Optimum Routine test Interval For Protection Relays," by J. J. Kumm, M.S. Weber, D. Hou, and E. O. Schweitzer, III, IEEE Transactions on Power Delivery, Vol. 10, No. 2, April 1995.

3. "Transmission Relay System Performance Comparison For 2000, 2001, 2002, 2003, 2004 and 2005," Working Group I17 of Power System Relaying Committee of IEEE Power Engineering Society, May 2006.

4. "A Survey of Relaying Test Practices," Special Report by WG I11 of Power System Relaying Committee of IEEE Power Engineering Society, September 16, 1999.

5. "Transmission Protective Relay System Performance Measuring Methodology," Working Group I3 of Power System Relaying Committee of IEEE Power Engineering Society, January 2002.

6. "Processes, Issues, Trends and Quality Control of Relay Settings," Working Group C3 of Power System Relaying Committee of IEEE Power Engineering Society, December 2006.

7. "Proposed Statistical Performance Measures for Microprocessor-Based Transmission-Line Protective Relays, Part I - Explanation of the Statistics, and Part II - Collection and Uses of Data," Working Group D5 of Power System Relaying Committee of IEEE Power Engineering Society, May 1995; Papers 96WM 016-6 PWRD and 96WM 127-1 PWRD, 1996 IEEE Power Engineering Society Winter Meeting.

8. "Analysis And Guidelines For Testing Numerical Protection Schemes," Final Report of CIGRE WG 34.10, August 2000.

9. "Use of Preventative Maintenance and System Performance Data to Optimize Scheduled Maintenance Intervals," H. Anderson, R. Loughlin, and J. Zipp, Georgia Tech Protective Relay Conference, May 1996.

10. "Battery Performance Monitoring by Internal Ohmic Measurements" EPRI Application Guidelines for Stationary Batteries TR- 108826 Final Report, December 1997.

11. "IEEE Recommended Practice for Maintenance, Testing, and Replacement of Valve-Regulated Lead-Acid (VRLA) Batteries for Stationary Applications," IEEE Power Engineering Society Std 1188 – 2005.

12. "IEEE Recommended Practice for Maintenance, Testing, and Replacement of Vented Lead-Acid Batteries for Stationary Applications," IEEE Power & Engineering Society Std 45-2010.

13. "IEEE Recommended Practice for Installation design and Installation of Vented Lead-Acid Batteries for Stationary Applications," IEEE Std 484 – 2002.

14. "Stationary Battery Monitoring by Internal Ohmic Measurements," EPRI Technical Report, 1002925 Final Report, December 2002.

15. "Stationary Battery Guide: Design Application, and Maintenance" EPRI Revision 2 of TR-100248, 1006757, August 2002.

PSMT SDT References

16. “Essentials of Statistics for Business and Economics” Anderson, Sweeney, Williams, 2003

17. “Introduction to Statistics and Data Analysis” - Second Edition, Peck, Olson, Devore, 2005

18. “Statistical Analysis for Business Decisions” Peters, Summers, 1968

Figures

Figure 1: Typical Transmission System

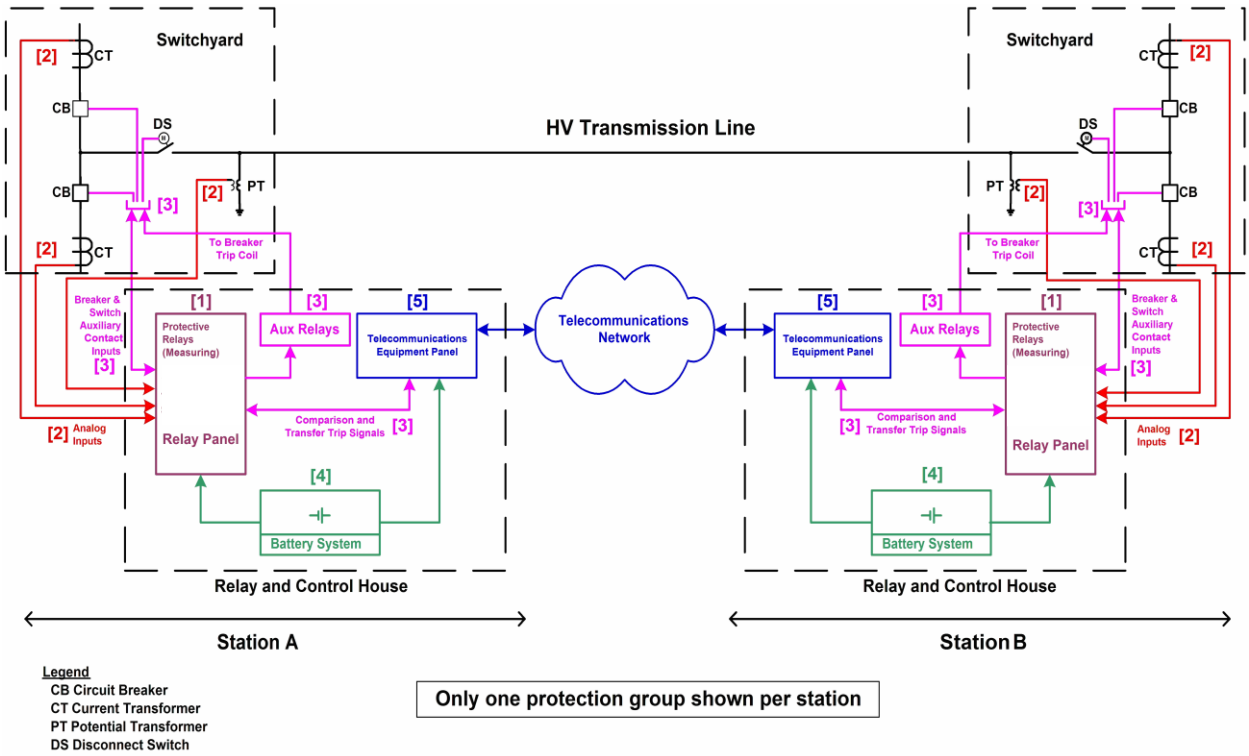

For information on components, see ***Figure 1 & 2 Legend – components of Protection Systems***

Figure 2: Typical Generation System

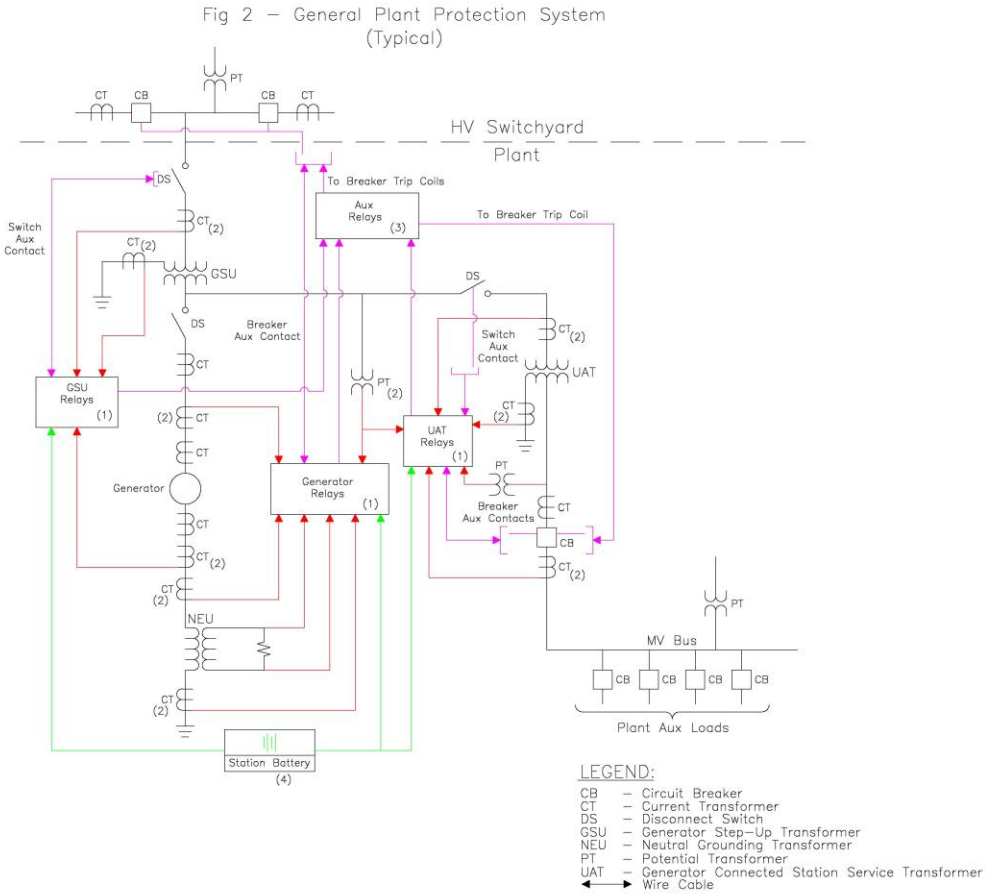

Note: Figure 2 may show elements that are not included within PRC-005-2, and also may not be all-inclusive; see the Applicability section of the standard for specifics.

For information on components, see ***Figure 1 & 2 Legend – components of Protection Systems***

Figure 1 & 2 Legend – components of Protection Systems

Number in Figure	component of Protection System	Includes	Excludes
1	Protective relays which respond to electrical quantities	All protective relays that use current and/or voltage inputs from current & voltage sensors and that trip the 86, 94 or trip coil.	Devices that use non-electrical methods of operation including thermal, pressure, gas accumulation, and vibration. Any ancillary equipment not specified in the definition of Protection Systems. Control and/or monitoring equipment that is not a part of the automatic tripping action of the Protection System
2	Voltage and current sensing devices providing inputs to protective relays	The signals from the voltage & current sensing devices to the protective relay input.	Voltage & current sensing devices that are not a part of the Protection System, including sync-check systems, metering systems and data acquisition systems.
3	Control circuitry associated with protective functions	All control wiring (or other medium for conveying trip signals) associated with the tripping action of 86 devices, 94 devices or trip coils (from all parallel trip paths). This would include fiber-optic systems that carry a trip signal as well as hard-wired systems that carry trip current.	Closing circuits, SCADA circuits, other devices in control scheme not passing trip current
4	Station dc supply	Batteries and battery chargers and any control power system which has the function of supplying power to the protective relays, associated trip circuits and trip coils.	Any power supplies that are not used to power protective relays or their associated trip circuits and trip coils.
5	Communications systems necessary for correct operation of protective functions	Tele-protection equipment used to convey specific information, in the form of analog or digital signals, necessary for the correct operation of protective functions.	Any communications equipment that is not used to convey information necessary for the correct operation of protective functions.

Additional information can be found in References

Appendix A

Appendix A

The following illustrates the concept of overlapping verifications and tests as summarized in Section 10 of the paper. As an example, Figure A-1 shows protection for a critical transmission line by carrier blocking directional comparison pilot relaying. The goal is to verify the ability of the entire two-terminal pilot protection scheme to protect for line Faults, and to avoid over-tripping for Faults external to the transmission line zone of protection bounded by the current transformer locations.

Figure A-1

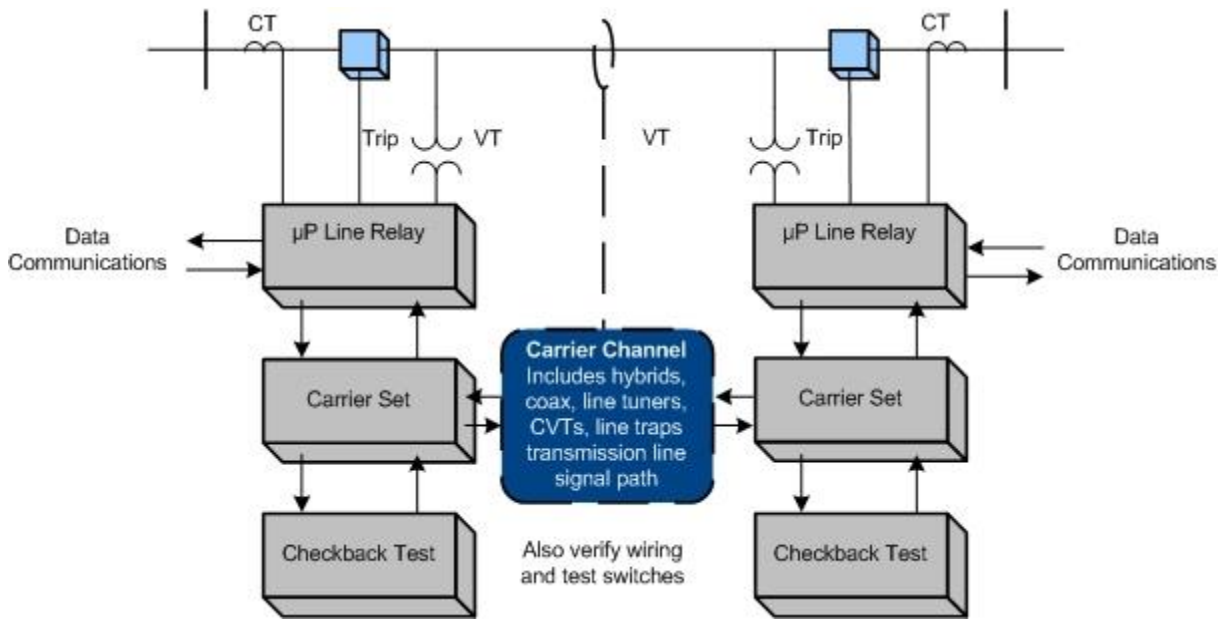

In this example (Figure A1), verification takes advantage of the self-monitoring features of microprocessor multifunction line relays at each end of the line. For each of the line relays themselves, the example assumes that the user has the following arrangements in place:

1. The relay has a data communications port that can be accessed from remote locations.
2. The relay has internal self-monitoring programs and functions that report failures of internal electronics, via communications messages or alarm contacts to SCADA.
3. The relays report loss of dc power, and the relays themselves or external monitors report the state of the dc battery supply.
4. The CT and PT inputs to the relays are used for continuous calculation of metered values of volts, amperes, plus Watts and VARs on the line. These metered values are reported by data communications. For maintenance, the user elects to compare these readings to those of other relays, meters, or DFRs. The other readings may be from redundant relaying or measurement systems or they may be derived from values in other protection zones. Comparison with other such readings to within required relaying accuracy verifies Voltage & Current Sensing Devices, wiring, and analog signal input processing of the relays. One

effective way to do this is to utilize the relay metered values directly in SCADA, where they can be compared with other references or state estimator values.

5. Breaker status indication from auxiliary contacts is verified in the same way as in (2). Status indications must be consistent with the flow or absence of current.
6. Continuity of the breaker trip circuit from dc bus through the trip coil is monitored by the relay and reported via communications.
7. Correct operation of the on-off carrier channel is also critical to security of the Protection System, so each carrier set has a connected or integrated automatic checkback test unit. The automatic checkback test runs several times a day. Newer carrier sets with integrated checkback testing check for received signal level and report abnormal channel attenuation or noise, even if the problem is not severe enough to completely disable the channel.

These monitoring activities plus the check-back test comprise automatic verification of all the Protection System elements that experience tells us are the most prone to fail. But, does this comprise a complete verification?

Figure A-2

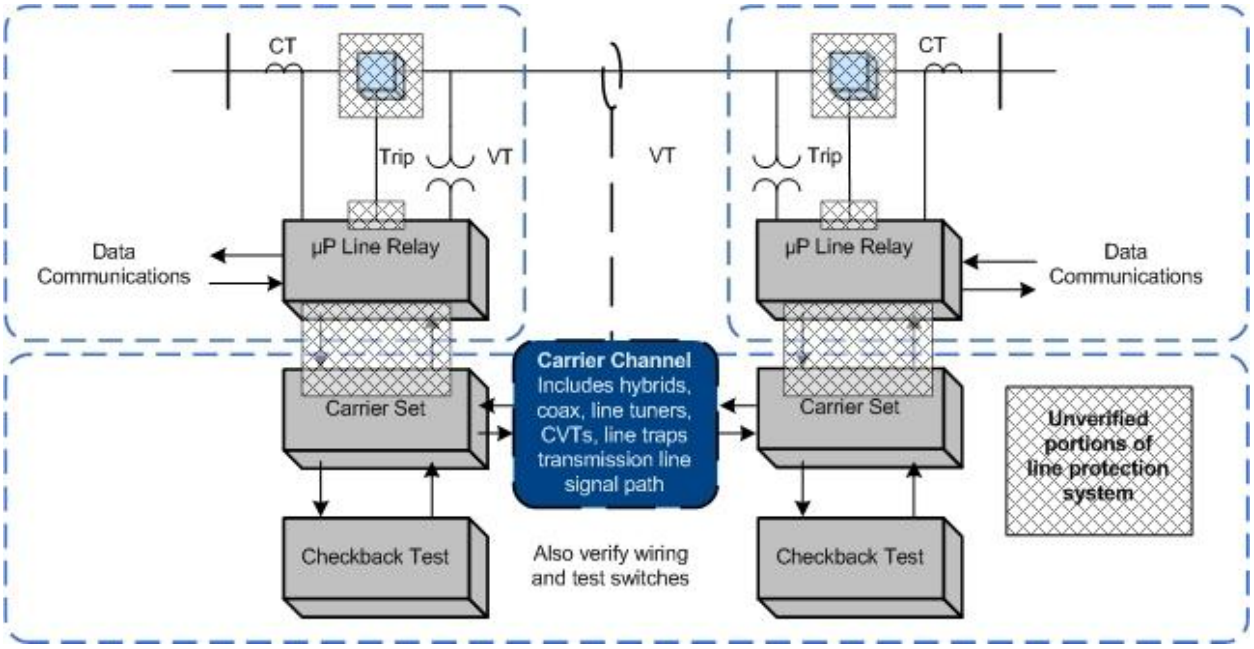

The dotted boxes of Figure A-2 show the sections of verification defined by the monitoring and verification practices just listed. These sections are not completely overlapping, and the shaded regions show elements that are not verified:

1. The continuity of trip coils is verified, but no means is provided for validating the ability of the circuit breaker to trip if the trip coil should be energized.

2. Within each line relay, all the microprocessors that participate in the trip decision have been verified by internal monitoring. However, the trip circuit is actually energized by the contacts of a small telephone-type "ice cube" relay within the line protective relay. The microprocessor energizes the coil of this ice cube relay through its output data port and a transistor driver circuit. There is no monitoring of the output port, driver circuit, ice cube relay, or contacts of that relay. These components are critical for tripping the circuit breaker for a Fault.
3. The check-back test of the carrier channel does not verify the connections between the relaying microprocessor internal decision programs and the carrier transmitter keying circuit or the carrier receiver output state. These connections include microprocessor I/O ports, electronic driver circuits, wiring, and sometimes telephone-type auxiliary relays.
4. The correct states of breaker and disconnect switch auxiliary contacts are monitored, but this does not confirm that the state change indication is correct when the breaker or switch opens.

A practical solution for (1) and (2) is to observe actual breaker tripping, with a specified maximum time interval between trip tests. Clearing of naturally-occurring Faults are demonstrations of operation that reset the time interval clock for testing of each breaker tripped in this way. If Faults do not occur, manual tripping of the breaker through the relay trip output via data communications to the relay microprocessor meets the requirement for periodic testing.

PRC-005 does not address breaker maintenance, and its Protection System test requirements can be met by energizing the trip circuit in a test mode (breaker disconnected) through the relay microprocessor. This can be done via a front-panel button command to the relay logic, or application of a simulated Fault with a relay test set. However, utilities have found that breakers often show problems during Protection System tests. It is recommended that Protection System verification include periodic testing of the actual tripping of connected circuit breakers.

Testing of the relay-carrier set interface in (3) requires that each relay key its transmitter, and that the other relay demonstrate reception of that blocking carrier. This can be observed from relay or DFR records during naturally occurring Faults, or by a manual test. If the checkback test sequence were incorporated in the relay logic, the carrier sets and carrier channel are then included in the overlapping segments monitored by the two relays, and the monitoring gap is completely eliminated.

Appendix B

Appendix B — Protection System Maintenance Standard Drafting Team

Charles W. Rogers
Chairman
Consumers Energy Co.

John B. Anderson
Xcel Energy

Merle Ashton
Tri-State G&T

Bob Bentert
Florida Power & Light Company

Forrest Brock
Western Farmers Electric Cooperative

Aaron Feathers
Pacific Gas and Electric Company

Sam Francis
Oncor Electric Delivery

Carol Gerou
Midwest Reliability Organization

Russell C. Hardison
Tennessee Valley Authority

David Harper
NRG Texas Maintenance Services

James M. Kinney
FirstEnergy Corporation

Mark Lucas
ComEd

Kristina Marriott
ENOSERV

Al McMeekin
NERC

Michael Palusso
Southern California Edison

Mark Peterson
Great River Energy

John Schecter
American Electric Power

William D. Shultz
Southern Company Generation

Eric A. Udren
Quanta Technology

Scott Vaughan
City of Roseville Electric Department

Matthew Westrich
American Transmission Company

Philip B. Winston
Southern Company Transmission

David Youngblood
Luminant Power

John A. Zipp
ITC Holdings

NERC
NORTH AMERICAN ELECTRIC
RELIABILITY CORPORATION

Supplementary Reference and FAQ - Draft

PRC-005-2 Protection System Maintenance

~~May,~~July 2012

RELIABILITY | ACCOUNTABILITY

3353 Peachtree Road NE
Suite 600, North Tower
Atlanta, GA 30326
404-446-2560 | www.nerc.com

Table of Contents

Table of Contents ii

1. Introduction and Summary 1

2. Need for Verifying Protection System Performance 2

2.1 Existing NERC Standards for Protection System Maintenance and Testing 2

2.2 Protection System Definition 3

2.3 Applicability of New Protection System Maintenance Standards 3

2.3.1 Frequently Asked Questions: 4

2.4 Applicable Relays 6

2.4.1 Frequently Asked Questions: 6

3. Protection Systems Product Generations 8

4. Definitions 10

4.1 Frequently Asked Questions: 11

5. Time-Based Maintenance (TBM) Programs 13

5.1 Maintenance Practices 13

5.1.1 Frequently Asked Questions: 15

5.2 Extending Time-Based Maintenance 16

5.2.1 Frequently Asked Questions: ..... 17~~16~~

6. Condition-Based Maintenance (CBM) Programs 18

To use the extended time intervals available through Condition Based Maintenance, simply look for the rows in the Tables that refer to monitored items. 18

6.1 Frequently Asked Questions: 18

7. Time-Based Versus Condition-Based Maintenance 20

7.1 Frequently Asked Questions: 20

8. Maximum Allowable Verification Intervals 26

8.1 Maintenance Tests 26

8.1.1 Table of Maximum Allowable Verification Intervals 26

8.1.2 Additional Notes for Tables 1-1 through 1-5 and Table 3 28

8.1.3 Frequently Asked Questions: 29

8.2 Retention of Records ..... 34~~33~~

8.2.1 Frequently Asked Questions: 34

8.3 Basis for Table 1 Intervals 36

8.4 Basis for Extended Maintenance Intervals for Microprocessor Relays 37

9. Performance-Based Maintenance Process 40

9.1 Minimum Sample Size 41

9.2 Frequently Asked Questions: 43

10. Overlapping the Verification of Sections of the Protection System 54

10.1 Frequently Asked Questions: 54

11. Monitoring by Analysis of Fault Records 55

11.1 Frequently Asked Questions: 56

12. Importance of Relay Settings in Maintenance Programs 57

12.1 Frequently Asked Questions: 57

13. Self-Monitoring Capabilities and Limitations 60

13.1 Frequently Asked Questions: 61

14. Notification of Protection System Failures 62

15. Maintenance Activities 63

15.1 Protective Relays (Table 1-1) 63

15.1.1 Frequently Asked Questions: 63

15.2 Voltage & Current Sensing Devices (Table 1-3) 63

15.2.1 Frequently Asked Questions: 65

15.3 Control circuitry associated with protective functions (Table 1-5) 66

15.3.1 Frequently Asked Questions: 68

15.4 Batteries and DC Supplies (Table 1-4) 70

15.4.1 Frequently Asked Questions: ..... 71~~70~~

15.5 Associated communications equipment (Table 1-2) ..... 85~~84~~

15.5.1 Frequently Asked Questions: ..... 87~~85~~

15.6 Alarms (Table 2) ..... 90~~88~~

15.6.1 Frequently Asked Questions: ..... 90~~88~~

15.7 Distributed UFLS and Distributed UVLS Systems (Table 3) ..... 91~~89~~

15.7.1 Frequently Asked Questions: ..... 92~~89~~

15.8 Examples of Evidence of Compliance ..... 92~~90~~

15.8.1 Frequently Asked Questions: ..... 92~~90~~

References ..... 94~~92~~

Figures ..... 96~~94~~

Figure 1: Typical Transmission System ..... 96~~94~~

Figure 2: Typical Generation System ..... 97~~95~~

Fig 2 – General Plant Protection System (Typical)

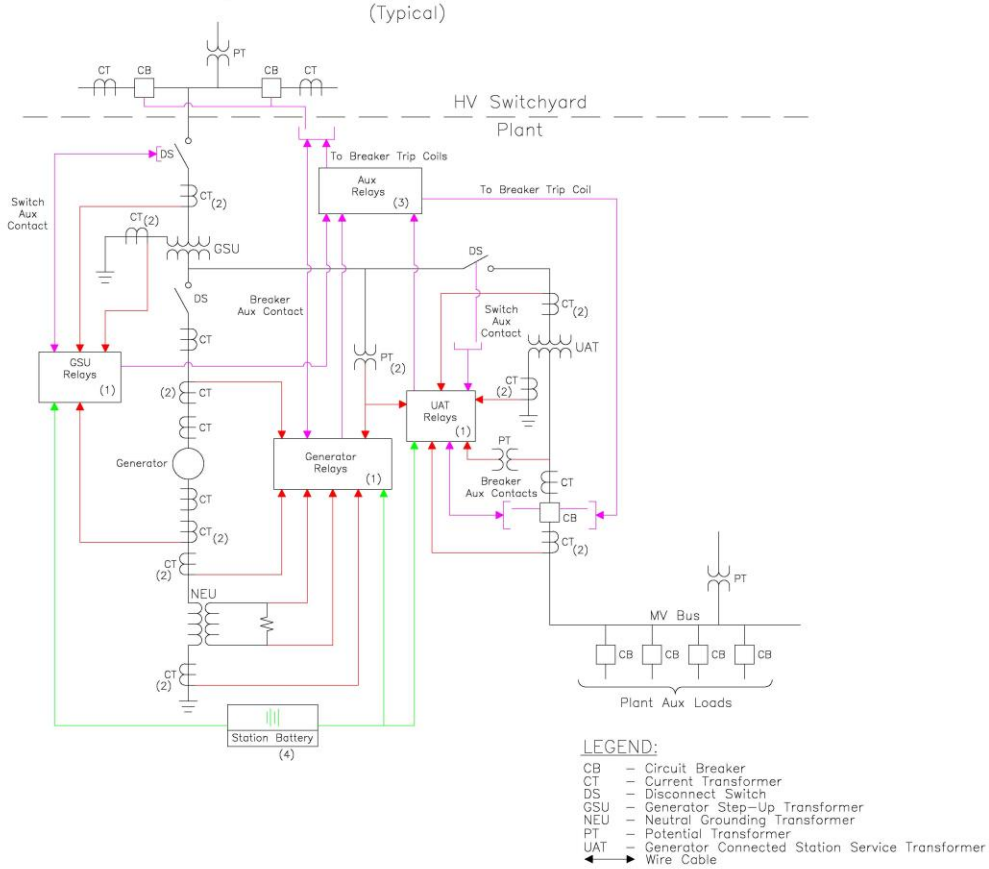

..... 97~~95~~

Figure 1 & 2 Legend – components of Protection Systems ..... 98~~96~~

Appendix A ..... 99~~97~~

Appendix A ..... 99~~97~~

Appendix B ..... 102~~100~~

Appendix B — Protection System Maintenance Standard Drafting Team ..... 102~~100~~

~~Table of Contents ..... ii~~

~~1. Introduction and Summary ..... 1~~

~~2. Need for Verifying Protection System Performance ..... 2~~

~~2.1 Existing NERC Standards for Protection System Maintenance and Testing ..... 2~~

~~2.2 Protection System Definition ..... 3~~

~~2.3 Applicability of New Protection System Maintenance Standards ..... 3~~

~~2.3.1 Frequently Asked Questions: 4~~

~~2.4 Applicable Relays 6~~

~~2.4.1 Frequently Asked Questions: 6~~

~~3. Protection Systems Product Generations 8~~

~~4. Definitions 10~~

~~4.1 Frequently Asked Questions: 10~~

~~5. Time-Based Maintenance (TMB) Programs 12~~

~~5.1 Maintenance Practices 12~~

~~5.1.1 Frequently Asked Questions: 14~~

~~5.2 Extending Time-Based Maintenance 15~~

~~5.2.1 Frequently Asked Questions: 15~~

~~6. Condition-Based Maintenance (CMB) Programs 17~~

~~6.1 Frequently Asked Questions: 17~~

~~7. Time-Based Versus Condition-Based Maintenance 19~~

~~7.1 Frequently Asked Questions: 19~~

~~8. Maximum Allowable Verification Intervals 25~~

~~8.1 Maintenance Tests 25~~

~~8.1.1 Table of Maximum Allowable Verification Intervals 25~~

~~8.1.2 Additional Notes for Tables 1-1 through 1-5 and Table 3 27~~

~~8.1.3 Frequently Asked Questions: 28~~

~~8.2 Retention of Records 33~~

~~8.2.1 Frequently Asked Questions: 33~~

~~8.3 Basis for Table 1 Intervals 35~~

~~8.4 Basis for Extended Maintenance Intervals for Microprocessor Relays 36~~

~~9. Performance-Based Maintenance Process 39~~

~~9.1 Minimum Sample Size ..... 40~~

~~9.2 Frequently Asked Questions: ..... 42~~

~~10. Overlapping the Verification of Sections of the Protection System ..... 53~~

~~10.1 Frequently Asked Questions: ..... 53~~

~~11. Monitoring by Analysis of Fault Records ..... 54~~

~~11.1 Frequently Asked Questions: ..... 55~~

~~12. Importance of Relay Settings in Maintenance Programs ..... 56~~

~~12.1 Frequently Asked Questions: ..... 56~~

~~13. Self-Monitoring Capabilities and Limitations ..... 59~~

~~13.1 Frequently Asked Questions: ..... 60~~

~~14. Notification of Protection System Failures ..... 61~~

~~15. Maintenance Activities ..... 62~~

~~15.1 Protective Relays (Table 1-1) ..... 62~~

~~15.1.1 Frequently Asked Questions: ..... 62~~

~~15.2 Voltage & Current Sensing Devices (Table 1-3) ..... 62~~

~~15.2.1 Frequently Asked Questions: ..... 64~~

~~15.3 Control circuitry associated with protective functions (Table 1-5) ..... 65~~

~~15.3.1 Frequently Asked Questions: ..... 67~~

~~15.4 Batteries and DC Supplies (Table 1-4) ..... 68~~

~~15.4.1 Frequently Asked Questions: ..... 69~~

~~15.5 Associated communications equipment (Table 1-2) ..... 82~~

~~15.5.1 Frequently Asked Questions: ..... 83~~

~~15.6 Alarms (Table 2) ..... 86~~

~~15.6.1 Frequently Asked Questions: ..... 86~~

~~15.7 Distributed UFLS and UVLS Systems (Table 3) ..... 86~~

~~15.7.1 Frequently Asked Questions: ..... 87~~

~~15.8 Examples of Evidence of Compliance ..... 88~~

~~15.8.1 Frequently Asked Questions: ..... 88~~

~~References ..... 89~~

~~Figures ..... 91~~

~~Figure 1: Typical Transmission System ..... 91~~

~~Figure 2: Typical Generation System ..... 92~~

~~Figure 1 & 2 Legend – Components of Protection Systems ..... 93~~

~~Appendix A ..... 94~~

~~Appendix B ..... 97~~

1. Introduction and Summary

Note: This supplementary reference for PRC-005-2 is neither mandatory nor enforceable.

NERC currently has four Reliability Standards that are mandatory and enforceable in the United States and address various aspects of maintenance and testing of Protection and Control Systems.

These standards are:

PRC-005-1 — Transmission and Generation Protection System Maintenance and Testing

PRC-008-0 — Underfrequency Load Shedding Equipment Maintenance Programs

PRC-011-0 — UVLS System Maintenance and Testing

PRC-017-0 — Special Protection System Maintenance and Testing

While these standards require that applicable entities have a maintenance program for Protection Systems, and that these entities must be able to demonstrate they are carrying out such a program, there are no specifics regarding the technical requirements for Protection System maintenance programs. Furthermore, FERC Order 693 directed additional modifications respective to Protection System maintenance programs. PRC-005-2 combines and replaces PRC-005, PRC-008, PRC-011 and PRC-017.

2. Need for Verifying Protection System Performance

Protective relays have been described as silent sentinels, and do not generally demonstrate their performance until a Fault or other power system problem requires that they operate to protect power system E~~e~~lements, or even the entire Bulk Electric System (BES). Lacking Faults, switching operations or system problems, the Protection Systems may not operate, beyond static operation, for extended periods. A Misoperation - a false operation of a Protection System or a failure of the Protection System to operate, as designed, when needed - can result in equipment damage, personnel hazards, and wide-area Disturbances or unnecessary customer outages. Maintenance or testing programs are used to determine the performance and availability of Protection Systems.

Typically, utilities have tested Protection Systems at fixed time intervals, unless they had some incidental evidence that a particular Protection System was not behaving as expected. Testing practices vary widely across the industry. Testing has included system functionality, calibration of measuring devices, and correctness of settings. Typically, a Protection System must be visited at its installation site and, in many cases, removed from service for this testing.

Fundamentally, a Reliability Standard for Protection System Maintenance and Testing requires the performance of the maintenance activities that are necessary to detect and correct plausible age and service related degradation of the Protection System ~~Component~~components, such that a properly built and commissioned Protection System will continue to function as designed over its service life.

Similarly station batteries, which are an important part of the station dc supply, are not called upon to provide instantaneous dc power to the Protection System until power is required by the Protection System to operate circuit breakers or interrupting devices to clear Faults or to isolate equipment.

2.1 Existing NERC Standards for Protection System Maintenance and Testing

For critical BES protection functions, NERC standards have required that each utility or asset owner define a testing program. The starting point is the existing Standard PRC-005, briefly restated as follows:

Purpose: To document and implement programs for the maintenance of all Protection Systems affecting the reliability of the Bulk Electric System (BES) so that these Protection Systems are kept in working order.

PRC-005-1 is not specific on where the boundaries of the Protection Systems lie. However, the definition of Protection System in the NERC Glossary of Terms used in Reliability Standards indicates what must be included as a minimum.

At the beginning of the project to develop PRC-005-2, the definition of Protection System was:

Protective relays, associated communications Systems, voltage and current sensing devices, station batteries and dc control circuitry.

Applicability: Owners of generation and transmission Protection Systems.

Requirements: The owner shall have a documented maintenance program with test intervals. The owner must keep records showing that the maintenance was performed at the specified intervals.

2.2 Protection System Definition

The most recently approved definition of Protection Systems is:

- Protective relays which respond to electrical quantities,
- C~~c~~ommunications s~~S~~ystems necessary for correct operation of protective functions,
- V~~v~~oltage and current sensing devices providing inputs to protective relays,
- S~~s~~tation dc supply associated with protective functions (including station batteries, battery chargers, and non-battery-based dc supply), and
- C~~c~~ontrol circuitry associated with protective functions through the trip coil(s) of the circuit breakers or other interrupting devices.

2.3 Applicability of New Protection System Maintenance Standards

The BES purpose is to transfer bulk power. The applicability language has been changed from the original PRC-005:

"...affecting the reliability of the Bulk Electric System (BES)…"

To the present language:

"…that are installed for the purpose of detecting Faults on BES Elements (lines, buses, transformers, etc.)."

The drafting team intends that this standard will follow with any definition of the Bulk Electric System. There should be no ambiguity; if the Element is a BES Element, then the Protection System protecting that Element should then be included within this standard. If there is regional variation to the definition, then there will be a corresponding regional variation to the Protection Systems that fall under this standard.

There is no way for the Standard Drafting Team to know whether a specific 230KV line, 115KV line (even 69KV line), for example, should be included or excluded. Therefore, the team set the clear intent that the standard language should simply be applicable to Protection Systems for BES Elements.

The BES is a NERC defined term that, from time to time, may undergo revisions. Additionally, there may even be regional variations that are allowed in the present and future definitions. See the NERC Glossary of Terms for the present, in-force definition. See the applicable Regional Reliability Organization for any applicable allowed variations.

While this standard will undergo revisions in the future, this standard will not attempt to keep up with revisions to the NERC definition of BES, but, rather, simply make BES Protection Systems applicable.

The Standard is applied to Generator Owners (GO) and Transmission Owners (TO) because GOs and TOs have equipment that is BES equipment. The standard brings in Distribution Providers (DP) because, depending on the station configuration of a particular substation, there may be Protection System equipment installed at a non-transmission voltage level (Distribution

Provider equipment) that is wholly or partially installed to protect the BES. PRC-005-2 would apply to this equipment. An example is u~~U~~nderfrequency l~~L~~oad-shedding, which is frequently applied well down into the distribution system to meet PRC-007-0.

As this standard is intended to replace the existing PRC-005, PRC-008, PRC-011 and PRC-017, those standards are used in the construction of this revision of PRC-005-1. Much of the original intent of those standards was carried forward whenever it was possible to continue the intent without a disagreement with FERC Order 693. For example, the original PRC-008 was constructed quite differently than the original PRC-005. The drafting team agrees with the intent of this and notes that distributed tripping schemes would have to exhibit multiple failures to trip before they would prove to be significant, as opposed to a single failure to trip of, for example, a t~~T~~ransmission Protection System Bus Differential lock-out relay. While many failures of these distribution breakers could add up to be significant, it is also believed that distribution breakers are operated often on just Fault clearing duty; and, therefore, the distribution circuit breakers are operated at least as frequently as stipulated in any requirement in this standard.

Additionally, since this standard will now replace PRC-011, it will be important to make the distinction between under-voltage Protection Systems that protect individual Loads and Protection Systems that are UVLS schemes that protect the BES. Any UVLS scheme that had been applicable under PRC-011 will now be applicable under this revision of PRC-005-1. An example of an u~~U~~nder-v~~V~~oltage l~~L~~oad-s~~S~~hedding scheme that is not applicable to this standard is one in which the tripping action was intended to prevent low distribution voltage to a specific Load from a Transmission s~~S~~ystem that was intact except for the line that was out of service, as opposed to preventing a Cascading outage or Transmission s~~S~~ystem collapse.

It had been correctly noted that the devices needed for PRC-011 are the very same types of devices needed in PRC-005.

Thus, a standard written for Protection Systems of the BES can easily make the needed requirements for Protection Systems, and replace some other standards at the same time.

2.3.1 Frequently Asked Questions:

What exactly is the BES, or Bulk Electric System?

BES is the abbreviation for Bulk Electric System. BES is a term in the Glossary of Terms used in Reliability Standards, and is not being modified within this draft standard.
NERC's approved definition of Bulk Electric System is:

As defined by the Regional Reliability Organization, the electrical generation resources, transmission lines, Interconnections with neighboring Systems, and associated equipment, generally operated at voltages of 100 kV or higher. Radial transmission ~~f~~Facilities serving only Load with one transmission source are generally not included in this definition.

The BES definition is presently undergoing the process of revision.

Each regional entity implements a definition of the Bulk Electric System that is based on this NERC definition; in some cases, supplemented by additional criteria. These regional definitions have been documented and provided to FERC as part of a *June 14, 2007 Informational Filing*.

Why is Distribution Provider included within the Applicable Entities and as a responsible entity within several of the requirements? Wouldn't anyone having relevant ~~f~~Facilities be a Transmission Owner?

Depending on the station configuration of a particular substation, there may be Protection System equipment installed at a non-transmission voltage level (Distribution Provider equipment) that is wholly or partially installed to protect the BES. PRC-005-2 would apply to this equipment. An example is u~~U~~nderfrequency l~~L~~oad-shedding, which is frequently applied well down into the distribution system to meet PRC-007-0.

We have an ~~U~~under v~~V~~oltage l~~L~~oad-s~~S~~hedding (UVLS) system in place that prevents one of our distribution substations from supplying extremely low voltage in the case of a specific transmission line outage. The transmission line is part of the BES. Does this mean that our UVLS system falls within this standard?

The situation, as stated, indicates that the tripping action was intended to prevent low distribution voltage to a specific Load from a Transmission System that was intact, except for the line that was out of service, as opposed to preventing Cascading outage or Transmission s~~S~~ystem collapse.

This standard is not applicable to this UVLS.

We have a UFLS or UVLS scheme that sheds the necessary Load through distribution-side circuit breakers and circuit reclosers. Do the trip-test requirements for circuit breakers apply to our situation?

No. Distributed tripping schemes would have to exhibit multiple failures to trip before they would prove to be significant, as opposed to a single failure to trip of, for example, a t~~T~~ransmission Protection System Bus Differential lock-out relay. While many failures of these distribution breakers could add up to be significant, it is also believed that distribution breakers are operated often on just Fault clearing duty; and, therefore, the distribution circuit breakers are operated at least as frequently as any requirements that might have appeared in this standard.

We have a UFLS scheme that, in some locales, sheds the necessary Load through non-BES circuit breakers and, occasionally, even circuit switchers. Do the trip-test requirements for circuit breakers apply to our situation?

If your "non-BES circuit breaker" has been brought into this standard by the inclusion of UFLS requirements, and otherwise would not have been brought into this standard, then the answer is that there are no trip-test requirements. For these devices that are otherwise non-BES assets, these tripping schemes would have to exhibit multiple failures to trip before they would prove to be as significant as, for example, a single failure to trip of a Transmission Protection System Bus Differential lock-out relay.

2.4 Applicable Relays

The NERC Glossary definition has a Protection System including relays, dc supply, current and voltage sensing devices, dc control circuitry and associated communications circuits. The relays to which this standard applies are those protective relays that respond to electrical quantities and provide a trip output to trip coils, dc control circuitry or associated communications equipment. This definition extends to IEEE Device No. 86 (lockout relay) and IEEE Device No. 94 (tripping or trip-free relay), as these devices are tripping relays that respond to the trip signal of the protective relay that processed the signals from the current and voltage-sensing devices.

Relays that respond to non-electrical inputs or impulses (such as, but not limited to, vibration, pressure, seismic, thermal or gas accumulation) are not included.

2.4.1 Frequently Asked Questions:

Are power circuit reclosers, reclosing relays, closing circuits and auto-restoration schemes covered in this Standard?

No. This standard covers protective relays that use electrical quantity measurements to determine anomalies and to trip a portion of the BES. Reclosers, reclosing relays, closing circuits and auto-restoration schemes are used to cause devices to close, as opposed to electrical-measurement relays and their associated circuits that cause circuit interruption from the BES; such closing devices and schemes are more appropriately covered under other NERC standards. There is one notable exception: Since PRC-017 will be superseded by PRC-005-2, then if a Special Protection System (previously covered by PRC-017) incorporates automatic closing of breakers, then the SPS-related closing devices must be tested accordingly.

I use my protective relays only as sources of metered quantities and breaker status for SCADA and EMS through a substation distributed RTU or data concentrator to the control center. What are the maintenance requirements for the relays?

This standard addresses Protection Systems that are installed for the purpose of detecting Faults on BES Elements (lines, buses, transformers, etc.). Protective relays, providing only the functions mentioned in the question, are not included.

Are Reverse Power Relays installed on the low-voltage side of distribution banks considered to be components of "Protection Systems that are installed for the purpose of detecting Faults on BES Elements (lines, buses, transformers, etc.)"?

Reverse power relays are often installed to detect situations where the transmission source becomes de-energized and the distribution bank remains energized from a source on the low-voltage side of the transformer and the settings are calculated based on the charging current of the transformer from the low-voltage side. Although these relays may operate as a result of a fault on a BES element, they are not 'installed for the purpose of detecting' these faults.

Is a Sudden Pressure Relay an auxiliary tripping relay?

No. IEEE C37.2-2008 assigns the Device No.# 94 to auxiliary tripping relays. Sudden pressure relays are assigned Device No.# 63. Sudden pressure relays are presently excluded from the standard because it does not utilize voltage and/or current measurements to determine anomalies. Devices that use anything other than electrical detection means are excluded. The trip path from a sudden pressure device is a part of the Protection System control circuitry. The sensing ~~E~~element is omitted from PRC-005-2 testing requirements because the SDT is unaware of industry-recognized testing protocol for the sensing e~~E~~lements. The SDT believes that

Protection Systems that trip (or can trip) the BES should be included. This position is consistent with the currently-approved PRC-005-1a, consistent with the SAR for Project 2007-17, and understands this to be consistent with the position of FERC staff.

My mechanical device does not operate electrically and does not have calibration settings; what maintenance activities apply?

You must conduct a test(s) to verify the integrity of any trip circuit that is a part of a Protection System. This standard does not cover circuit breaker maintenance or transformer maintenance. The standard also does not presently cover testing of devices, such as sudden pressure relays (63), temperature relays (49), and other relays which respond to mechanical parameters, rather than electrical parameters. There is an expectation that Fault pressure relays and other non-electrically initiated devices may become part of some maintenance standard. This standard presently covers trip paths. It might seem incongruous to test a trip path without a present requirement to test the device; and, thus, be arguably more work for nothing. But one simple test to verify the integrity of such a trip path could be (but is not limited to) a voltage presence test, as a dc voltage monitor might do if it were installed monitoring that same circuit.

The standard specifically mentions auxiliary and lock-out relays. What is an auxiliary tripping relay?

An auxiliary relay, IEEE Device No.# 94, is described in IEEE Standard C37.2-2008 as: "A device that functions to trip a circuit breaker, contactor, or equipment; to permit immediate tripping by other devices; or to prevent immediate reclosing of a circuit interrupter if it should open automatically, even though its closing circuit is maintained closed."

What is a lock-out relay?

A lock-out relay, IEEE Device No.# 86, is described in IEEE Standard C37.2 as: "A device that trips and maintains the associated equipment or devices inoperative until it is reset by an operator, either locally or remotely."

3. Protection Systems Product Generations

The likelihood of failure and the ability to observe the operational state of a critical Protection System both depends on the technological generation of the relays, as well as how long they have been in service. Unlike many other transmission asset groups, protection and control Systems have seen dramatic technological changes spanning several generations. During the past 20 years, major functional advances are primarily due to the introduction of microprocessor technology for power system devices, such as primary measuring relays, monitoring devices, control Systems, and telecommunications equipment.

Modern microprocessor-based relays have six significant traits that impact a maintenance strategy:

- Self monitoring capability - the processors can check themselves, peripheral circuits, and some connected substation inputs and outputs, such as trip coil continuity. Most relay users are aware that these relays have self monitoring, but are not focusing on exactly what internal functions are actually being monitored. As explained further below, every e~~E~~lement critical to the Protection System must be monitored, or else verified periodically.
- Ability to capture Fault records showing how the Protection System responded to a Fault in its zone of protection, or to a nearby Fault for which it is required not to operate.
- Ability to meter currents and voltages, as well as status of connected circuit breakers, continuously during non-Fault times. The relays can compute values, such as MW and MVAR line flows, that are sometimes used for operational purposes, such as SCADA.
- Data communications via ports that provide remote access to all of the results of Protection System monitoring, recording and measurement.
- Ability to trip or close circuit breakers and switches through the Protection System outputs, on command from remote data communications messages, or from relay front panel button requests.
- Construction from electronic components, some of which have shorter technical life or service life than electromechanical components of prior Protection System generations.

There have been significant advances in the technology behind the other ~~Component~~components of Protection Systems. Microprocessors are now a part of battery chargers, associated communications equipment, voltage and current-measuring devices, and even the control circuitry (in the form of software-latches replacing lock-out relays, etc.).

Any Protection System ~~Component~~component can have self-monitoring and alarming capability, not just relays. Because of this technology, extended time intervals can find their way into all ~~Component~~components of the Protection System.

This standard also recognizes the distinct advantage of using advanced technology to justifiably defer or even eliminate traditional maintenance. Just as a hand-held calculator does not require routine testing and calibration, neither does a calculation buried in a microprocessor-based device that results in a “lock-out.” Thus, the software-latch 86 that replaces an electro-

mechanical 86 does not require routine trip testing. Any trip circuitry associated with the "soft 86" would still need applicable verification activities performed, but the actual "86" does not have to be "electrically operated" or even toggled.

4. Definitions

Protection System Maintenance Program (PSMP) — An ongoing program by which Protection System ~~Component~~components are kept in working order and proper operation of malfunctioning ~~Component~~components is restored. A maintenance program for a specific ~~Component~~component includes one or more of the following activities:

- Verify — Determine that the ~~Component~~component is functioning correctly.
- Monitor — Observe the routine in-service operation of the ~~Component~~component.
- Test — Apply signals to a ~~Component~~component to observe functional performance or output behavior, or to diagnose problems.
- Inspect — Detect visible signs of ~~Component~~component failure, reduced performance and degradation.
- Calibrate — Adjust the operating threshold or measurement accuracy of a measuring element to meet the intended performance requirement.
- Unresolved Maintenance Issue – A deficiency identified during a maintenance activity that causes the component to not meet the intended performance, cannot be corrected during the maintenance interval, and requires follow-up corrective action.
- Segment – Protection Systems or components of a consistent design standard, or a particular model or type from a single manufacturer that typically share other common elements. Consistent performance is expected across the entire population of a Segment. A Segment must contain at least sixty (60) individual components.
- Component Type - Any one of the five specific elements of the Protection System definition.
- Component – A Component is any individual discrete piece of equipment included in a Protection System, including but not limited to a protective relay or current sensing device. The designation of what constitutes a control circuit Component is dependent upon how an entity performs and tracks the testing of the control circuitry. Some entities test their control circuits on a breaker basis whereas others test their circuitry on a local zone of protection basis. Thus, entities are allowed the latitude to designate their own definitions of control circuit Components. Another example of where the entity has some discretion on determining what constitutes a single Component is the voltage and current sensing devices, where the entity may choose either to designate a full three-phase set of such devices or a single device as a single Component.*
- Countable Event – A failure of a Component requiring repair or replacement, any condition discovered during the maintenance activities in Tables 1-1 through 1-5 and Table 3 which requires corrective action or a Misoperation attributed to hardware failure or calibration failure. Misoperations due to product design errors, software errors, relay settings different from specified settings, Protection System Component configuration errors, or Protection System application errors are not included in Countable Events.

4.1 Frequently Asked Questions:

Why does PRC-005-2 not specifically require maintenance and testing procedures, as reflected in the previous standard, PRC-005-1?

PRC-005-1 does not require detailed maintenance and testing procedures, but instead requires summaries of such procedures, and is not clear on what is actually required. PRC-005-2 requires a documented maintenance program, and is focused on establishing requirements rather than prescribing methodology to meet those requirements. Between the activities identified in the Tables 1-1 through 1-5, Table 2 and Table 3 (collectively the "Tables"), and the various ~~Component~~components of the definition established for a "Protection System Maintenance Program," PRC-005-2 establishes the activities and time basis for a Protection System Maintenance Program to a level of detail not previously required.

Please clarify what is meant by "restore" in the definition of maintenance.

The description of "restore" in the definition of a Protection System Maintenance Program addresses corrective activities necessary to assure that the ~~Component~~component is returned to working order following the discovery of its failure or malfunction. The Maintenance Activities specified in the Tables do not present any requirements related to Restoration; R5 of the standard does require that the entity "shall demonstrate efforts to correct any identified Unresolved Maintenance Issues." Some examples of restoration (or correction of Unresolved Maintenance Issues) include, but are not limited to, replacement of capacitors in distance relays to bring them to working order; replacement of relays, or other Protection System ~~Component~~components, to bring the Protection System to working order; upgrade of electromechanical or solid-state protective relays to microprocessor-based relays following the discovery of failed ~~Component~~components. Restoration, as used in this context, is not to be confused with restoration rules as used in system operations. Maintenance activity necessarily includes both the detection of problems and the repairs needed to eliminate those problems. This standard does not identify all of the Protection System problems that must be detected and eliminated, rather it is the intent of this standard that an entity determines the necessary working order for their various devices, and keeps them in working order. If an equipment item is repaired or replaced, then the entity can restart the maintenance-time-interval-clock, if desired; however, the replacement of equipment does not remove any documentation requirements that would have been required to verify compliance with time-interval requirements. In other words, do not discard maintenance data that goes to verify your work.

The retention of documentation for new and/or replaced equipment is all about proving that the maintenance intervals had been in compliance. For example, a long-range plan of upgrades might lead an entity to ignore required maintenance; retaining the evidence of prior maintenance that existed before any retirements and upgrades proves compliance with the standard.

Please clarify what is meant by "…demonstrate efforts to correct an Unresolved Maintenance Issue…"; why not measure the completion of the corrective action?

Management of completion of the identified Unresolved Maintenance Issue is a complex topic that falls outside of the scope of this standard. There can be any number of supply, process and management problems that make setting repair deadlines impossible. The SDT specifically chose the phrase "demonstrate efforts to correct" (with guidance from NERC Staff) because of the concern that many more complex Unresolved Maintenance Issues might require greater

than the remaining maintenance interval to resolve (and yet still be a "closed-end process"). For example, a problem might be identified on a VRLA battery during a six-month check. In instances such as one that requiring battery replacement as part of the long-term resolution, it is highly unlikely that the battery could be replaced in time to meet the six-calendar-month requirement for this maintenance activity. The SDT does not believe entities should be found in violation of a maintenance program requirement because of the inability to complete a remediation program within the original maintenance interval. The SDT does believe corrective actions should be timely, but concludes it would be impossible to postulate all possible remediation projects; and, therefore, impossible to specify bounding time frames for resolution of all possible Unresolved Maintenance Issues, or what documentation might be sufficient to provide proof that effective corrective action is being undertaken.

5. Time-Based Maintenance (TBM) Programs

Time-based maintenance is the process in which Protection Systems are maintained or verified according to a time schedule. The scheduled program often calls for technicians to travel to the physical site and perform a functional test on Protection System ~~Component~~components. However, some ~~Component~~components of a TBM program may be conducted from a remote location - for example, tripping a circuit breaker by communicating a trip command to a microprocessor relay to determine if the entire Protection System tripping chain is able to operate the breaker. Similarly, all Protection System ~~Component~~components can have the ability to remotely conduct tests, either on-command or routinely; the running of these tests can extend the time interval between hands-on maintenance activities.

5.1 Maintenance Practices

Maintenance and testing programs often incorporate the following types of maintenance practices:

- TBM – time-based maintenance – externally prescribed maximum maintenance or testing intervals are applied for ~~Component~~components or groups of ~~Component~~components. The intervals may have been developed from prior experience or manufacturers' recommendations. The TBM verification interval is based on a variety of factors, including experience of the particular asset owner, collective experiences of several asset owners who are members of a country or regional council, etc. The maintenance intervals are fixed and may range in number of months or in years.

  TBM can include review of recent power system events near the particular terminal. Operating records may verify that some portion of the Protection System has operated correctly since the last test occurred. If specific protection scheme ~~Component~~components have demonstrated correct performance within specifications, the maintenance test time clock can be reset for those ~~Component~~components.

- PBM – Performance-Based Maintenance - intervals are established based on analytical or historical results of TBM failure rates on a statistically significant population of similar ~~Component~~components. Some level of TBM is generally followed. Statistical analyses accompanied by adjustments to maintenance intervals are used to justify continued use of PBM-developed extended intervals when test failures or in-service failures occur infrequently.

- CBM – condition-based maintenance – continuously or frequently reported results from non-disruptive self-~~-~~monitoring of ~~Component~~components demonstrate operational status as those ~~Component~~components remain in service. Whatever is verified by CBM does not require manual testing, but taking advantage of this requires precise technical focus on exactly what parts are included as part of the ~~self-diagnostics~~self-diagnostics. While the term "Condition-Based-Maintenance" (CBM) is no longer used within the standard itself, it is important to note that the concepts of CBM are a part of the standard (in the form of extended time intervals through status-monitoring). These extended time intervals are only allowed (in the absence of PBM) if the condition of the device is monitored (CBM). As a consequence of the "monitored-basis-time-intervals"

existing within the standard, the explanatory discussions within this Supplementary Reference concerned with CBM will remain in this reference and are discussed as CBM.

Microprocessor-based Protection System ~~Component~~components that perform continuous self-monitoring verify correct operation of most ~~Component~~components within the device. Self-monitoring capabilities may include battery continuity, float voltages, unintentional grounds, the ac signal inputs to a relay, analog measuring circuits, processors and memory for measurement, protection, and data communications, trip circuit monitoring, and protection or data communications signals (and many, many more measurements). For those conditions, failure of a self-monitoring routine generates an alarm and may inhibit operation to avoid false trips. When internal ~~Component~~components, such as critical output relay contacts, are not equipped with self-monitoring, they can be manually tested. The method of testing may be local or remote, or through inherent performance of the scheme during a system event.

The TBM is the overarching maintenance process of which the other types are subsets. Unlike TBM, PBM intervals are adjusted based on good or bad experiences. The CBM verification intervals can be hours, or even milliseconds between non-disruptive self-monitoring checks within or around ~~Component~~components as they remain in service.

TBM, PBM, and CBM can be combined for individual ~~Component~~components, or within a complete Protection System. The following diagram illustrates the relationship between various types of maintenance practices described in this section. In the Venn diagram, the overlapping regions show the relationship of TBM with PBM historical information and the inherent continuous monitoring offered through CBM.

This figure shows:

- Region 1: The TBM intervals that are increased based on known reported operational condition of individual ~~Component~~components that are monitoring themselves.
- Region 2: The TBM intervals that are adjusted up or down based on results of analysis of maintenance history of statistically significant population of similar products that have been subject to TBM.
- Region 3: Optimal TBM intervals based on regions 1 and 2.

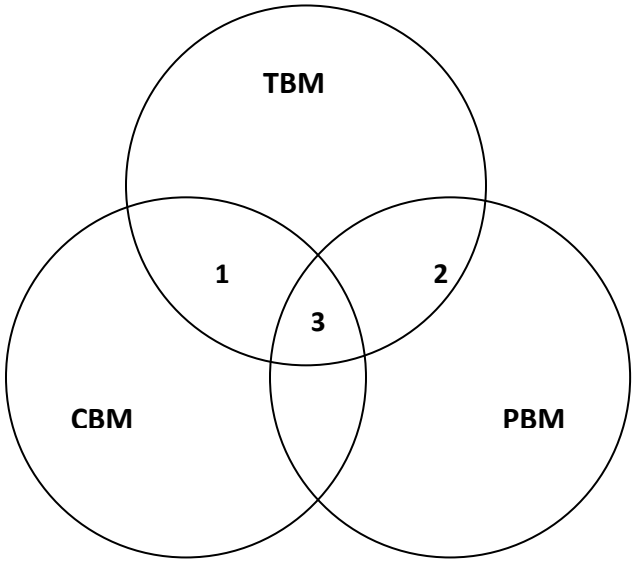

Relationship of time-based maintenance types

5.1.1 Frequently Asked Questions:

The standard seems very complicated, and is difficult to understand. Can it be simplified?

Because the standard is establishing parameters for condition-based Maintenance (R1) and Performance-Based Maintenance (R2), in addition to simple time-based Maintenance, it does appear to be complicated. At its simplest, an entity needs to ONLY perform time-based maintenance according to the unmonitored rows of the Tables. If an entity then wishes to take advantage of monitoring on its Protection System ~~Component~~components and its available lengthened time intervals, then it may, as long as the ~~Component~~component has the listed monitoring attributes. If an entity wishes to use historical performance of its Protection System ~~Component~~components to perform Performance-Based Maintenance, then R2 applies.

Please see the following diagram, which provides a "flow chart" of the standard.

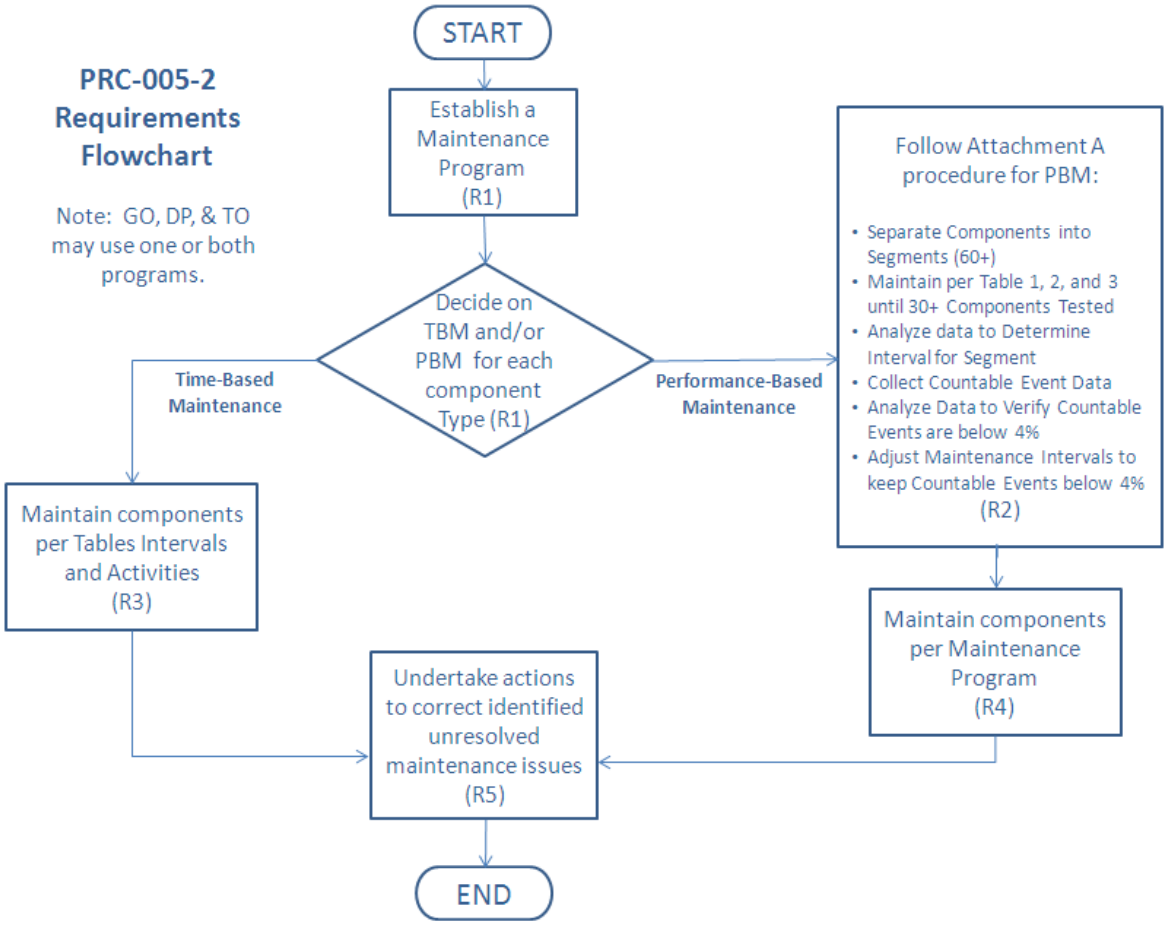

We have an electromechanical (unmonitored) relay that has a trip output to a lockout relay (unmonitored) which trips our transformer off-line by tripping the transformer's high-side and low-side circuit breakers. What testing must be done for this system?

This system is made up of ~~Component~~component~~s~~ that are all unmonitored. Assuming a time-based Protection System maintenance program schedule (as opposed to a Performance-Based maintenance program), each ~~Component~~component must be maintained per the most frequent hands-on activities listed in the Tables.

5.2 Extending Time-Based Maintenance

All maintenance is fundamentally time-based. Default time-based intervals are commonly established to assure proper functioning of each ~~Component~~component of the Protection System, when data on the reliability of the ~~Component~~component~~s~~ is not available other than observations from time-based maintenance. The following factors may influence the established default intervals:

- If continuous indication of the functional condition of a ~~Component~~component is available (from relays or chargers or any self-monitoring device), then the intervals may be extended, or manual testing may be eliminated. This is referred to as condition-based maintenance or CBM. CBM is valid only for precisely the ~~Component~~component~~s~~ subject to monitoring. In the case of microprocessor-based relays, self-monitoring may

not include automated diagnostics of every ~~Component~~component within a microprocessor.

- Previous maintenance history for a group of ~~Component~~components of a common type may indicate that the maintenance intervals can be extended, while still achieving the desired level of performance. This is referred to as Performance-Based Maintenance, or PBM. It is also sometimes referred to as reliability-centered maintenance, or RCM; but PBM is used in this document.
- Observed proper operation of a ~~Component~~component may be regarded as a maintenance verification of the respective ~~Component~~component or element in a microprocessor-based device. For such an observation, the maintenance interval may be reset only to the degree that can be verified by data available on the operation. For example, the trip of an electromechanical relay for a Fault verifies the trip contact and trip path, but only through the relays in series that actually operated; one operation of this relay cannot verify correct calibration.

Excessive maintenance can actually decrease the reliability of the ~~Component~~component or system. It is not unusual to cause failure of a ~~Component~~component by removing it from service and restoring it. The improper application of test signals may cause failure of a ~~Component~~component. For example, in electromechanical overcurrent relays, test currents have been known to destroy convolution springs.

In addition, maintenance usually takes the ~~Component~~component out of service, during which time it is not able to perform its function. Cutout switch failures, or failure to restore switch position, commonly lead to protection failures.

5.2.1 Frequently Asked Questions:

If I show the protective device out of service while it is being repaired, then can I add it back as a new protective device when it returns? If not, my relay testing history would show that I was out of compliance for the last maintenance cycle.

The maintenance and testing requirements (R5) (in essence) state "…shall demonstrate efforts to correct any identified Unresolved Maintenance Issues." The type of corrective activity is not stated; however it could include repairs or replacements.

Your documentation requirements will increase, of course, to demonstrate that your device tested bad and had corrective actions initiated. Your regional entity could very well ask for documentation showing status of your corrective actions.

6. Condition-Based Maintenance (CBM) Programs

Condition-based maintenance is the process of gathering and monitoring the information available from modern microprocessor-based relays and other intelligent electronic devices (IEDs) that monitor Protection System e~~E~~lements. These devices generate monitoring information during normal operation, and the information can be assessed at a convenient location remote from the substation. The information from these relays and IEDs is divided into two basic types:

1. Information can come from background self-monitoring processes, programmed by the manufacturer, or by the user in device logic settings. The results are presented by alarm contacts or points, front panel indications, and by data communications messages.
2. Information can come from event logs, captured files, and/or oscillographic records for Faults and Disturbances, metered values, and binary input status reports. Some of these are available on the device front panel display, but may be available via data communications ports. Large files of Fault information can only be retrieved via data communications. These results comprise a mass of data that must be further analyzed for evidence of the operational condition of the Protection System.

Using these two types of information, the user can develop an effective maintenance program carried out mostly from a central location remote from the substation. This approach offers the following advantages:

1. **Non-invasive Maintenance:** The system is kept in its normal operating state, without human intervention for checking. This reduces risk of damage, or risk of leaving the system in an inoperable state after a manual test. Experience has shown that keeping human hands away from equipment known to be working correctly enhances reliability.
2. **Virtually Continuous Monitoring:** CBM will report many hardware failure problems for repair within seconds or minutes of when they happen. This reduces the percentage of problems that are discovered through incorrect relaying performance. By contrast, a hardware failure discovered by TBM may have been there for much of the time interval between tests, and there is a good chance that some devices will show health problems by incorrect operation before being caught in the next test round. The frequent or continuous nature of CBM makes the effective verification interval far shorter than any required TBM maximum interval.

To use the extended time intervals available through Condition Based Maintenance, simply look for the rows in the Tables that refer to monitored items.

6.1 Frequently Asked Questions:

My microprocessor relays and dc circuit alarms are contained on relay panels in a 24-hour attended control room. Does this qualify as an extended time interval condition-based (monitored) system?

Yes, provided the station attendant (plant operator, etc.) monitors the alarms and other indications (comparable to the monitoring attributes) and reports them within the given time limits that are stated in the criteria of the Tables.

When documenting the basis for inclusion of ~~Component~~component~~s~~ into the appropriate levels of monitoring, as per Requirement R1 (Part 1.4) of the standard, is it necessary to provide this documentation about the device by listing of every ~~Component~~component and the specific monitoring attributes of each device?

No. While maintaining this documentation on the device level would certainly be permissible, it is not necessary. Global statements can be made to document appropriate levels of monitoring for the entire population of a ~~Component~~component type or portion thereof.

For example, it would be permissible to document the conclusion that all BES substation dc supply battery chargers are monitored by stating the following within the program description:

> "All substation dc supply battery chargers are considered monitored and subject to the rows for monitored equipment of Table 1-4 requirements, as all substation dc supply battery chargers are equipped with dc voltage alarms and ground detection alarms that are sent to the manned control center."

Similarly, it would be acceptable to use a combination of a global statement and a device-level list of exclusions. Example:

> "Except as noted below, all substation dc supply battery chargers are considered monitored and subject to the rows for monitored equipment of Table 1-4 requirements, as all substation dc supply battery chargers are equipped with dc voltage alarms and ground detection alarms that are sent to the manned control center. The dc supply battery chargers of Substation X, Substation Y, and Substation Z are considered unmonitored and subject to the rows for unmonitored equipment in Table 1-4 requirements, as they are not equipped with ground detection capability."

Regardless whether this documentation is provided by device listing of monitoring attributes, by global statements of the monitoring attributes of an entire population of ~~Component~~component types, or by some combination of these methods, it should be noted that auditors may request supporting drawings or other documentation necessary to validate the inclusion of the device(s) within the appropriate level of monitoring. This supporting background information need not be maintained within the program document structure, but should be retrievable if requested by an auditor.

7. Time-Based Versus Condition-Based Maintenance

Time-based and condition-based (or monitored) maintenance programs are both acceptable, if implemented according to technically sound requirements. Practical programs can employ a *combination of time-based and condition-based maintenance.* The standard requirements introduce the concept of optionally using condition monitoring as a documented element of a maintenance program.

The Federal Energy Regulatory Commission (FERC), in its Order Number 693 Final Rule, dated March 16, 2007 (18 CFR Part 40, Docket No. RM06-16-000) on Mandatory Reliability Standards for the Bulk-Power System, directed NERC to submit a modification to PRC-005-1 that includes a requirement that maintenance and testing of a Protection System must be carried out within a maximum allowable interval that is appropriate to the type of the Protection System and its impact on the reliability of the Bulk Power System. Accordingly, this Supplementary Reference Paper refers to the specific maximum allowable intervals in PRC-005-2. The defined time limits allow for longer time intervals if the maintained ~~Component~~component is monitored.

A key feature of condition-based monitoring is that it effectively reduces the time delay between the moment of a protection failure and time the Protection System owner knows about it, for the monitored segments of the Protection System. In some cases, the verification is practically continuous - the time interval between verifications is minutes or seconds. Thus, technically sound, condition-based verification, meets the verification requirements of the FERC order even more effectively than the strictly time-based tests of the same system ~~Component~~components.

The result is that:

This NERC standard permits utilities to use a technically sound approach and to take advantage of remote monitoring, data analysis, and control capabilities of modern Protection Systems to reduce the need for periodic site visits and invasive testing of ~~Component~~components by on-site technicians. This periodic testing must be conducted within the maximum time intervals specified in Tables 1-1 through 1-5 and Table 2 of PRC-005-2.

7.1 Frequently Asked Questions:

What is a Calendar Year?

Calendar Year - January 1 through December 31 of any year. As an example, if an event occurred on June 17, 2009 and is on a "One Calendar Year Interval," the next event would have to occur on or before December 31, 2010.

Please provide an example of "4 Calendar Months".

If a maintenance activity is described as being needed every four Calendar Months then it is performed in a (given) month and due again four months later. For example a battery bank is inspected in month number 1 then it is due again before the end of the month number5. And specifically consider that you perform your battery inspection on January 3, 2010 then it must be inspected again before the end of May. Another example could be that a four-month inspection was performed in January is due in May, but if performed in March (instead of May)

would still be due four months later therefore the activity is due again July. Basically every "four Calendar Months" means to add four months from the last time the activity was performed.

Please provide an example of the unmonitored versus other levels of monitoring available?

An unmonitored Protection System has no monitoring and alarm circuits on the Protection System ~~Component~~components. A Protection System ~~Component~~component that has monitoring attributes but no alarm output connected is considered to be unmonitored.

A monitored Protection System or an individual monitored ~~Component~~component of a Protection System has monitoring and alarm circuits on the Protection System ~~Component~~components. The alarm circuits must alert, within 24 hours, a location wherein corrective action can be initiated. This location might be, but is not limited to, an Operations Center, Dispatch Office, Maintenance Center or even a portable SCADA system.

There can be a combination of monitored and unmonitored Protection Systems within any given scheme, substation or plant; there can also be a combination of monitored and unmonitored ~~Component~~components within any given Protection System.

Example #1: A combination of monitored and unmonitored ~~Component~~components within a given Protection System might be:

- A microprocessor relay with an internal alarm connected to SCADA to alert 24-hr staffed operations center; it has internal self diagnosis and alarming. (monitored)
- Instrumentation transformers, with no monitoring, connected as inputs to that relay. (unmonitored)
- A vented Lead-Acid battery with a low voltage alarm for the station dc supply voltage and an unintentional grounds detection alarm connected to SCADA. (monitoring varies)
- A circuit breaker with a trip coil, and the trip circuit is not monitored. (unmonitored)

Given the particular ~~Component~~components and conditions, and using Table 1 and Table 2, the particular ~~Component~~components have maximum activity intervals of:

Every four calendar months, inspect:

- Electrolyte level (station dc supply voltage and unintentional ground detection is being maintained more frequently by the monitoring system).

Every 18 calendar months, verify/inspect the following:

- Battery bank ohmic values to station battery baseline (if performance tests are not opted)
- Battery charger float voltage
- Battery rack integrity
- Cell condition of all individual battery cells (where visible)
- Battery continuity
- Battery terminal connection resistance
- Battery cell-to-cell resistance (where available to measure)

Every six calendar years, perform/verify the following:

- Battery performance test (if internal ohmic tests or **other measurements indicative of battery performance** are not opted)
- Verify that each trip coil is able to operate the circuit breaker, interrupting device, or mitigating device
- For electromechanical lock-out relays, electrical operation of electromechanical trip

Every 12 calendar years, verify the following:

- Microprocessor relay settings are as specified
- Operation of the microprocessor's relay inputs and outputs that are essential to proper functioning of the Protection System
- Acceptable measurement of power System input values seen by the microprocessor protective relay
- Verify that current and voltage signal values are provided to the protective relays
- Protection System ~~Component~~component monitoring for the battery system signals are conveyed to a location where corrective action can be initiated
- The microprocessor relay alarm signals are conveyed to a location where corrective action can be initiated
- Verify all trip paths in the control circuitry associated with protective functions through the trip coil(s) of the circuit breakers or other interrupting devices
- Auxiliary outputs that are in the trip path shall be maintained as detailed in Table 1-5 of the standard under the 'Unmonitored Control Circuitry Associated with Protective Functions" section'
- Auxiliary outputs not in a trip path (i.e., annunciation or DME input) are not required, by this standard, to be checked

Example #2: A combination of monitored and unmonitored ~~Component~~components within a given Protection System might be:

- A microprocessor relay with integral alarm that is not connected to SCADA. (unmonitored)
- Current and voltage signal values, with no monitoring, connected as inputs to that relay. (unmonitored)
- A vented lead-acid battery with a low voltage alarm for the station dc supply voltage and an unintentional grounds detection alarm connected to SCADA. (monitoring varies)
- A circuit breaker with a trip coil, with no circuits monitored. (unmonitored)

Given the particular ~~Component~~components and conditions, and using the Table 1 (Maximum Allowable Testing Intervals and Maintenance Activities) and Table 2 (Alarming Paths and Monitoring), the particular ~~Component~~components have maximum activity intervals of:

Every four calendar months, inspect:

- Electrolyte level (station dc supply voltage and unintentional ground detection is being maintained more frequently by the monitoring system)

Every 18 calendar months, verify/inspect the following:

- Battery bank **trending of** ohmic values **or other measurements indicative of battery performance** to station battery baseline (if performance tests are not opted)
- Battery charger float voltage
- Battery rack integrity
- Cell condition of all individual battery cells (where visible)
- Battery continuity
- Battery terminal connection resistance
- Battery cell-to-cell resistance (where available to measure)

Every six calendar years, verify/perform the following:

- Verify operation of the relay inputs and outputs that are essential to proper functioning of the Protection System
- Verify acceptable measurement of power system input values as seen by the relays
- Verify that each trip coil is able to operate the circuit breaker, interrupting device, or mitigating device
- For electromechanical lock-out relays, electrical operation of electromechanical trip
- Battery performance test (if internal ohmic tests are not opted)

Every 12 calendar years, verify the following:

- Current and voltage signal values are provided to the protective relays
- Protection System ~~Component~~component monitoring for the battery system signals are conveyed to a location where corrective action can be initiated
- All trip paths in the control circuitry associated with protective functions through the trip coil(s) of the circuit breakers or other interrupting devices
- Auxiliary outputs that are in the trip path shall be maintained, as detailed in Table 1-5 of the standard under the Unmonitored Control Circuitry Associated with Protective Functions" section
- Auxiliary outputs not in a trip path (i.e., annunciation or DME input) are not required, by this standard, to be checked

Example #3: A combination of monitored and unmonitored ~~Component~~components within a given Protection System might be:

- A microprocessor relay with alarm connected to SCADA to alert 24-hr staffed operations center; it has internal self diagnosis and alarms. (monitored)
- Current and voltage signal values, with monitoring, connected as inputs to that relay (monitored)

- Vented Lead-Acid battery without any alarms connected to SCADA (unmonitored)
- Circuit breaker with a trip coil, with no circuits monitored (unmonitored)

Given the particular ~~Component~~components, conditions, and using the Table 1 (Maximum Allowable Testing Intervals and Maintenance Activities) and Table 2 (Alarming Paths and Monitoring), the particular ~~Component~~components shall have maximum activity intervals of:

Every four calendar months, verify/inspect the following:

- Station dc supply voltage
- For unintentional grounds
- Electrolyte level

Every 18 calendar months, verify/inspect the following:

- Battery bank trending of ohmic values other measurements indicative of battery performance to station battery baseline (if performance tests are not opted)
- Battery charger float voltage
- Battery rack integrity
- Battery continuity
- Battery terminal connection resistance
- Battery cell-to-cell resistance (where available to measure)
- Condition of all individual battery cells (where visible)

Every six calendar years, perform/verify the following:

- Battery performance test (if internal ohmic tests other measurements indicative of battery performance are not opted)
- Verify that each trip coil is able to operate the circuit breaker, interrupting device, or mitigating device
- For electromechanical lock-out relays, electrical operation of electromechanical trip

Every 12 calendar years, verify the following:

- The microprocessor relay alarm signals are conveyed to a location where corrective action can be taken
- Microprocessor relay settings are as specified
- Operation of the microprocessor's relay inputs and outputs that are essential to proper functioning of the Protection System
- Acceptable measurement of power system input values seen by the microprocessor protective relay
- Verify all trip paths in the control circuitry associated with protective functions through the trip coil(s) of the circuit breakers or other interrupting devices

- Auxiliary outputs that are in the trip path shall be maintained, as detailed in Table 1-5 of the standard under the Unmonitored Control Circuitry Associated with Protective Functions section
- Auxiliary outputs not in a trip path (i.e. annunciation or DME input) are not required, by this standard, to be checked

Why do ~~Component~~component~~s~~ have different maintenance activities and intervals if they are monitored?

The intent behind different activities and intervals for monitored equipment is to allow less frequent manual intervention when more information is known about the condition of Protection System ~~Component~~component~~s~~. Condition-Based Maintenance is a valuable asset to improve reliability.

Can all ~~Component~~component~~s~~ in a Protection System be monitored?

No. For some ~~Component~~component~~s~~ in a Protection System, monitoring will not be relevant. For example, a battery will always need some kind of inspection.

We have a 30-year-old oil circuit breaker with a red indicating lamp on the substation relay panel that is illuminated only if there is continuity through the breaker trip coil. There is no SCADA monitor or relay monitor of this trip coil. The line protection relay package that trips this circuit breaker is a microprocessor relay that has an integral alarm relay that will assert on a number of conditions that includes a loss of power to the relay. This alarm contact connects to our SCADA system and alerts our 24-hour operations center of relay trouble when the alarm contact closes. This microprocessor relay trips the circuit breaker only and does not monitor trip coil continuity or other things such as trip current. Are the ~~Component~~component~~s~~ monitored or not? How often must I perform maintenance?

The protective relay is monitored and can be maintained every 12 years, or when an Unresolved Maintenance Issue arises. The control circuitry can be maintained every 12 years. The circuit breaker trip coil(s) has to be electrically operated at least once every six years.

What is a mitigating device?

A mitigating device is the device that acts to respond as directed by a Special Protection System. It may be a breaker, valve, distributed control system, or any variety of other devices.

8. Maximum Allowable Verification Intervals

The maximum allowable testing intervals and maintenance activities show how CBM with newer device types can reduce the need for many of the tests and site visits that older Protection System ~~Component~~components require. As explained below, there are some sections of the Protection System that monitoring or data analysis may not verify. Verifying these sections of the Protection Systems requires some persistent TBM activity in the maintenance program. However, some of this TBM can be carried out remotely - for example, exercising a circuit breaker through the relay tripping circuits using the relay remote control capabilities can be used to verify function of one tripping path and proper trip coil operation, if there has been no Fault or routine operation to demonstrate performance of relay tripping circuits.

8.1 Maintenance Tests

Periodic maintenance testing is performed to ensure that the protection and control system is operating correctly after a time period of field installation. These tests may be used to ensure that individual ~~Component~~components are still operating within acceptable performance parameters - this type of test is needed for ~~Component~~components susceptible to degraded or changing characteristics due to aging and wear. Full system performance tests may be used to confirm that the total Protection System functions from measurement of power system values, to properly identifying Fault characteristics, to the operation of the interrupting devices.

8.1.1 Table of Maximum Allowable Verification Intervals

Table 1 (collectively known as Table 1, individually called out as Tables 1-1 through 1-5), Table 2 and Table 3 in the standard specify maximum allowable verification intervals for various generations of Protection Systems and categories of equipment that comprise Protection Systems. The right column indicates maintenance activities required for each category.

The types of ~~Component~~components are illustrated in Figures 1 and 2 at the end of this paper. Figure 1 shows an example of telecommunications-assisted transmission Protection System comprising substation equipment at each terminal and a telecommunications channel for relaying between the two substations. Figure 2 shows an example of a generation Protection System. The various sub-s~~S~~ystems of a Protection System that need to be verified are shown.

Non-distributed UFLS, UVLS, and SPS are additional categories of Table 1 that are not illustrated in these figures. Non-distributed UFLS, UVLS and SPS all use identical equipment as Protection Systems in the performance of their functions; and, therefore, have the same maintenance needs.

Distributed UFLS and UVLS Systems, which use local sensing on the distribution S~~s~~ystem and trip co-located non-BES interrupting devices, are addressed in Table 3 with reduced maintenance activities.

While it is easy to associate protective relays to multiple levels of monitoring, it is also true that most of the ~~Component~~components that can make up a Protection System can also have technological advancements that place them into higher levels of monitoring.

To use the Maintenance Activities and Intervals Tables from PRC-005-2:

- First find the Table associated with your ~~Component~~component. The tables are arranged in the order of mention in the definition of Protection System;
    - Table 1-1 is for protective relays,
    - Table 1-2 is for the associated communications s~~S~~ystems,
    - Table 1-3 is for current and voltage sensing devices,
    - Table 1-4 is for station dc supply and
    - Table 1-5 is for control circuits.
    - Table 2, is for alarms; this was broken out to simplify the other tables.
    - Table 3 is for ~~Component~~components which make-up distributed UFLS and UVLS Systems.
- Next look within that table for your device and its degree of monitoring. The Tables have different hands-on maintenance activities prescribed depending upon the degree to which you monitor your equipment. Find the maintenance activity that applies to the monitoring level that you have on your piece of equipment.
- This Maintenance activity is the minimum maintenance activity that must be documented.
- If your Performance-Based Maintenance (PBM) plan requires more activities, then you must perform and document to this higher standard. (Note that this does not apply unless you utilize PBM.)
- After the maintenance activity is known, check the maximum maintenance interval; this time is the maximum time allowed between hands-on maintenance activity cycles of this ~~Component~~component.
- If your Performance-Based Maintenance plan requires activities more often than the Tables maximum, then you must perform and document those activities to your more stringent standard. (Note that this does not apply unless you utilize PBM.)
- Any given ~~Component~~component of a Protection System can be determined to have a degree of monitoring that may be different from another ~~Component~~component within that same Protection System. For example, in a given Protection System it is possible for an entity to have a monitored protective relay and an unmonitored associated communications system; this combination would require hands-on maintenance activity on the relay at least once every 12 years and attention paid to the communications system as often as every four months.
- An entity does not have to utilize the extended time intervals made available by this use of condition-based monitoring. An easy choice to make is to simply utilize the unmonitored level of maintenance made available on each of the five Tables. While the maintenance activities resulting from this choice would require more maintenance man-hours, the maintenance requirements may be simpler to document and the resulting maintenance plans may be easier to create.

For each Protection System ~~Component~~component, Table 1 shows maximum allowable testing intervals for the various degrees of monitoring. These degrees of monitoring, or levels, range from the legacy unmonitored through a system that is more comprehensively monitored.

It has been noted here that an entity may have a PSMP that is more stringent than PRC-005-2. There may be any number of reasons that an entity chooses a more stringent plan than the minimums prescribed within PRC-005-2, most notable of which is an entity using performance based maintenance methodology. If an entity has a Performance-Based Maintenance program, then that plan must be followed, even if the plan proves to be more stringent than the minimums laid out in the Tables.

8.1.2 Additional Notes for Tables 1-1 through 1-5 and Table 3

1. For electromechanical relays, adjustment is required to bring measurement accuracy within the tolerance needed by the asset owner. Microprocessor relays with no remote monitoring of alarm contacts, etc, are unmonitored relays and need to be verified within the Table interval as other unmonitored relays but may be verified as functional by means other than testing by simulated inputs.

2. Microprocessor relays typically are specified by manufacturers as not requiring calibration, but acceptable measurement of power system input values must be verified (verification of the Analog to Digital [A/D] converters) within the Table intervals. The integrity of the digital inputs and outputs that are used as protective functions must be verified within the Table intervals.

3. Any Phasor Measurement Unit (PMU) function whose output is used in a Protection System or SPS (as opposed to a monitoring task) must be verified as a ~~Component~~component in a Protection System.

4. In addition to verifying the circuitry that supplies dc to the Protection System, the owner must maintain the station dc supply. The most widespread station dc supply is the station battery and charger. Unlike most Protection System ~~Component~~components, physical inspection of station batteries for signs of ~~Component~~component failure, reduced performance, and degradation are required to ensure that the station battery is reliable enough to deliver dc power when required. IEEE Standards 450, 1188, and 1106 for vented lead-acid, valve-regulated lead-acid, and nickel-cadmium batteries, respectively (which are the most commonly used substation batteries on the NERC BES) have been developed as an important reference source of maintenance recommendations. The Protection System owner might want to follow the guidelines in the applicable IEEE recommended practices for battery maintenance and testing. However, the committee has tailored the battery maintenance and testing guidelines in PRC-005-2 for the Protection System owner which are application specific for the BES Facilities. While the IEEE recommendations are all encompassing, PRC-005-2 is a more economical approach while addressing the reliability requirements of the BES.~~use the applicable IEEE recommended practice which contains information and recommendations concerning the maintenance, testing and replacement of its substation battery. However, the methods prescribed in these recommendations cannot be specifically required because they are offered as best practice guidelines and not set as standards.IEEE recommendations cannot be specifically required because they do not apply to all battery applications.~~

5. Aggregated small entities might distribute the testing of the population of UFLS/UVLS s~~S~~ystems, and large entities will usually maintain a portion of these s~~S~~ystems in any given year. Additionally, if relatively small quantities of such s~~S~~ystems do not perform properly, it will not affect the integrity of the overall program. Thus, these distributed s~~S~~ystems have decreased requirements as compared to other Protection Systems.

6. Voltage & Current Sensing Device circuit input connections to the Protection System relays can be verified by (but not limited to) comparison of measured values on live circuits or by using test currents and voltages on equipment out of service for maintenance. The verification process can be automated or manual. The values should be verified to be as expected (phase value and phase relationships are both equally important to verify).

7. "End-to-end test," as used in this Supplementary Reference, is any testing procedure that creates a remote input to the local communications-assisted trip scheme. While this can be interpreted as a GPS-type functional test, it is not limited to testing via GPS. Any remote scheme manipulation that can cause action at the local trip path can be used to functionally-test the dc control circuitry. A documented Real-time trip of any given trip path is acceptable in lieu of a functional trip test. It is possible, with sufficient monitoring, to be able to verify each and every parallel trip path that participated in any given dc Control Circuit trip. Or another possible solution is that a single trip path from a single monitored relay can be verified to be the trip path that successfully tripped during a Real-time operation. The variations are only limited by the degree of engineering and monitoring that an entity desires to pursue.

8. A/D verification may use relay front panel value displays, or values gathered via data communications. Groupings of other measurements (such as vector summation of bus feeder currents) can be used for comparison if calibration requirements assure acceptable measurement of power system input values.

9. Notes 1-8 attempt to describe some testing activities; they do not represent the only methods to achieve these activities, but rather some possible methods. Technological advances, ingenuity and/or industry accepted techniques can all be used to satisfy maintenance activity requirements; the standard is technology- and method-neutral in most cases.

8.1.3 Frequently Asked Questions:

What is meant by "Verify that settings are as specified" maintenance activity in Table 1-1?

Verification of settings is an activity directed mostly towards microprocessor- based relays. For relay maintenance departments that choose to test microprocessor-based relays in the same manner as electromechanical relays are tested, the testing process sometimes requires that some specific functions be disabled. Later tests might enable the functions previously disabled, but perhaps still other functions or logic statements were then masked out. It is imperative that, when the relay is placed into service, the settings in the relay be the settings that were intended to be in that relay or as the standard states "…settings are as specified."

Many of the microprocessor- based relays available today have software tools which provide this functionality and generate reports for this purpose.

For evidence or documentation of this requirement, a simple recorded acknowledgement that the settings were checked to be as specified is sufficient.

The drafting team was careful not to require "…that the relay settings be correct…" because it was believed that this might then place a burden of proof that the specified settings would result in the correct intended operation of the interrupting device. While that is a noble intention, the measurable proof of such a requirement is immense. The intent is that settings of the ~~Component~~component be as specified at the conclusion of maintenance activities, whether those settings may have "drifted" since the prior maintenance or whether changes were made as part of the testing process.

Are electromechanical relays included in the "Verify that settings are as specified" maintenance activity in Table 1-1?

Verification of settings is an activity directed towards the application of protection related functions of microprocessor based relays. Electromechanical relays require calibration verification by voltage and/or current injection; and, thus, the settings are verified during calibration activity. In the example of a time-overcurrent relay, a minor deviation in time dial, versus the settings, may be acceptable, as long as the relay calibration is within accepted tolerances at the injected current amplitudes. A major deviation may require further investigation, as it could indicate a problem with the relay or an incorrect relay style for the application.

The verification of phase current and voltage measurements by comparison to other quantities seems reasonable. How, though, can I verify residual or neutral currents, or 3V0 voltages, by comparison, when my system is closely balanced?

Since these inputs are verified at commissioning, maintenance verification requires ensuring that phase quantities are as expected and that 3IO and 3VO quantities appear equal to or close to 0.

These quantities also may be verified by use of oscillographic records for connected microprocessor relays as recorded during system Disturbances. Such records may compare to similar values recorded at other locations by other microprocessor relays for the same event, or compared to expected values (from short circuit studies) for known Fault locations.

What does this Standard require for testing an auxiliary tripping relay?

Table 1 and Table 3 requires that a trip test must verify that the auxiliary tripping relay(s) and/or lockout relay(s) which are directly in a trip path from the protective relay to the interrupting device trip coil operate(s) electrically. Auxiliary outputs not in a trip path (i.e. annunciation or DME input) are not required, by this standard, to be checked.

Do I have to perform a full end-to-end test of a Special Protection System?

No. All portions of the SPS need to be maintained, and the portions must overlap, but the overall SPS does not need to have a single end-to-end test. In other words it may be tested in piecemeal fashion provided all of the pieces are verified.

What about SPS interfaces between different entities or owners?

As in all of the Protection System requirements, SPS segments can be tested individually, thus minimizing the need to accommodate complex maintenance schedules.

What do I have to do if I am using a phasor measurement unit (PMU) as part of a Protection System or Special Protection System?

Any Phasor Measurement Unit (PMU) function whose output is used in a Protection System or Special Protection System (as opposed to a monitoring task) must be verified as a ~~Component~~component in a Protection System.

How do I maintain a Special Protection System or relay sensing for non-distributed UFLS or UVLS Systems?

Since ~~Component~~components of the SPS, UFLS and UVLS are the same types of ~~Component~~components as those in Protection Systems, then these ~~Component~~components should be maintained like similar ~~Component~~components used for other Protection System functions. In many cases the devices for SPS, UFLS and UVLS are also used for other protective functions. The same maintenance activities apply with the exception that distributed s~~S~~ystems (UFLS and UVLS) have fewer dc supply and control circuitry maintenance activity requirements.

For the testing of the output action, verification may be by breaker tripping, but may be verified in overlapping segments. For example, an SPS that trips a remote circuit breaker might be tested by testing the various parts of the scheme in overlapping segments. Another method is to document the Real-time tripping of an SPS scheme should that occur. Forced trip tests of circuit breakers (etc) that are a part of distributed UFLS or UVLS schemes are not required.

The established maximum allowable intervals do not align well with the scheduled outages for my power plant. Can I extend the maintenance to the next scheduled outage following the established maximum interval?

No. You must complete your maintenance within the established maximum allowable intervals in order to be compliant. You will need to schedule your maintenance during available outages to complete your maintenance as required, even if it means that you may do protective relay maintenance more frequently than the maximum allowable intervals. The maintenance intervals were selected with typical plant outages, among other things, in mind.

If I am unable to complete the maintenance, as required, due to a major natural disaster (hurricane, earthquake, etc.), how will this affect my compliance with this standard?

The Sanction Guidelines of the North American Electric Reliability Corporation, effective January 15, 2008, provides that the Compliance Monitor will consider extenuating circumstances when considering any sanctions.

What if my observed testing results show a high incidence of out-of-tolerance relays; or, even worse, I am experiencing numerous relay Misoperations due to the relays being out-of-tolerance?

The established maximum time intervals are mandatory only as a not-to-exceed limitation. The establishment of a maximum is measurable. But any entity can choose to test some or all of their Protection System ~~Component~~components more frequently (or to express it differently, exceed the minimum requirements of the standard). Particularly if you find that the maximum intervals in the standard do not achieve your expected level of performance, it is understandable that you would maintain the related equipment more frequently. A high incidence of relay Misoperations is in no one's best interest.

We believe that the four-month interval between inspections is unneccessary. Why can we not perform these inspections twice per year?

The Standard Drafting Team, through the comment process, has discovered that routine monthly inspections are not the norm. To align routine station inspections with other important inspections, the four-month interval was chosen. In lieu of station visits, many activities can be accomplished with automated monitoring and alarming.

Our maintenance plan calls for us to perform routine protective relay tests every 3 years. If we are unable to achieve this schedule, but we are able to complete the procedures in less than the maximum time interval ,then are we in or out of compliance?

According to R3, if you have a time-based maintenance program, then you will be in violation of the standard only if you exceed the maximum maintenance intervals prescribed in the Tables. According to R4, if your device in question is part of a Performance-Based Maintenance program, then you will be in violation of the standard if you fail to meet your PSMP, even if you do not exceed the maximum maintenance intervals prescribed in the Tables. The intervals in the Tables are associated with TBM and CBM; Attachment A is associated with PBM.

Please provide a sample list of devices or s~~S~~ystems that must be verified in a generator, generator step-up transformer, generator connected station service or generator connected excitation transformer to meet the requirements of this maintenance standard.

Examples of typical devices and s~~S~~ystems that may directly trip the generator, or trip through a lockout relay, may include, but are not necessarily limited to:

- Fault protective functions, including distance functions, voltage-restrained overcurrent functions, or voltage-controlled overcurrent functions
- Loss-of-field relays
- Volts-per-hertz relays
- Negative sequence overcurrent relays
- Over voltage and under voltage protection relays
- Stator-ground relays
- Communications-based Protection Systems such as transfer-trip s~~S~~ystems
- Generator differential relays
- Reverse power relays
- Frequency relays
- Out-of-step relays
- Inadvertent energization protection
- Breaker failure protection

For generator step-up, generator-connected station service transformers, or generator connected excitation transformers, operation of any of the following associated protective

relays frequently would result in a trip of the generating unit; and, as such, would be included in the program:

- Transformer differential relays
- Neutral overcurrent relay
- Phase overcurrent relays

Relays which trip breakers serving station auxiliary Loads such as pumps, fans, or fuel handling equipment, etc., need not be included in the program, even if the loss of the those Loads could result in a trip of the generating unit. Furthermore, relays which provide protection to secondary unit substation (SUS) or low switchgear transformers and relays protecting other downstream plant electrical distribution system components are not included in the scope of this program, even if a trip of these devices might eventually result in a trip of the generating unit. For example, a thermal overcurrent trip on the motor of a coal-conveyor belt could eventually lead to the tripping of the generator, but it does not cause the trip.

In the case where a plant does not have a generator connected station service transformer such that it is normally fed from a system connected station service transformer, is it still the drafting team's intent to exclude the Protection Systems for these system connected auxiliary transformers from scope even when the loss of the normal (system connected) station service transformer will result in a trip of a BES generating Facility?

The SDT does not intend that the system-connected station service transformers be included in the Applicability. The generator-connected station service transformers and generator connected excitation transformers are often connected to the generator bus directly without an interposing breaker; thus, the Protection Systems on these transformers will trip the generator as discussed in 4.2.5.1.

What is meant by "verify operation of the relay inputs and outputs that are essential to proper functioning of the Protection System?"

Any input or output (of the relay) that "affects the tripping" of the breaker is included in the scope of I/O of the relay to be verified. By "affects the tripping," one needs to realize that sometimes there are more inputs and outputs than simply the output to the trip coil. Many important protective functions include things like breaker fail initiation, zone timer initiation and sometimes even 52a/b contact inputs are needed for a protective relay to correctly operate.

Each input should be "picked up" or "turned on and off" and verified as changing state by the microprocessor of the relay. Each output should be "operated" or "closed and opened" from the microprocessor of the relay and the output should be verified to change state on the output terminals of the relay. One possible method of testing inputs of these relays is to "jumper" the needed dc voltage to the input and verify that the relay registered the change of state.

Electromechanical lock-out relays (86) (used to convey the tripping current to the trip coils) need to be electrically operated to prove the capability of the device to change state. These tests need to be accomplished at least every six years, unless PBM methodology is applied.

The contacts on the 86 or auxiliary tripping relays (94) that change state to pass on the trip current to a breaker trip coil need only be checked every 12 years with the control circuitry.

What is the difference between a distributed UFLS/UVLS and a non-distributed UFLS/UVLS scheme?

A distributed UFLS or UVLS scheme contains individual relays which make independent Load shed decisions based on applied settings and localized voltage and/or current inputs. A distributed scheme may involve an enable/disable contact in the scheme and still be considered a distributed scheme. A non-distributed UFLS or UVLS scheme involves a system where there is some type of centralized measurement and Load shed decision being made. A non-distributed UFLS/UVLS scheme is considered similar to an SPS scheme and falls under Table 1 for maintenance activities and intervals.

8.2 Retention of Records

PRC-005-1 describes a reporting or auditing cycle of one year and retention of records for three years. However, with a three-year retention cycle, the records of verification for a Protection System might be discarded before the next verification, leaving no record of what was done if a Misoperation or failure is to be analyzed.

PRC-005-2 corrects this by requiring:

The Transmission Owner, Generator Owner, and Distribution Provider shall each retain documentation of the two most recent performances of each distinct maintenance activity for the Protection System ~~Component~~component~~s~~, or to the previous scheduled (on-site) audit date, whichever is longer.

This requirement assures that the documentation shows that the interval between maintenance cycles correctly meets the maintenance interval limits. The requirement is actually alerting the industry to documentation requirements already implemented by audit teams. Evidence of compliance bookending the interval shows interval accomplished instead of proving only your planned interval.

The SDT is aware that, in some cases, the retention period could be relatively long. But, the retention of documents simply helps to demonstrate compliance.

8.2.1 Frequently Asked Questions:

Please use a specific example to demonstrate the data retention requirements.

The data retention requirements are intended to allow the availability of maintenance records to demonstrate that the time intervals in your maintenance plan were upheld. For example: "Company A" has a maintenance plan that requires its electromechanical protective relays be tested every three calendar years, with a maximum allowed grace period of an additional 18 months. This entity would be required to maintain its records of maintenance of its last two routine scheduled tests. Thus, its test records would have a latest routine test, as well as its previous routine test. The interval between tests is, therefore, provable to an auditor as being within "Company A's" stated maximum time interval of 4.5 years.

The intent is not to require three test results proving two time intervals, but rather have two test results proving the last interval. The drafting team contends that this minimizes storage requirements, while still having minimum data available to demonstrate compliance with time intervals.

If an entity prefers to utilize Performance-Based Maintenance, then statistical data may well be retained for extended periods to assist with future adjustments in time intervals.

If an equipment item is replaced, then the entity can restart the maintenance-time-interval-clock if desired; however, the replacement of equipment does not remove any documentation requirements that would have been required to verify compliance with time-interval requirements. In other words, do not discard maintenance data that goes to verify your work.

The retention of documentation for new and/or replaced equipment is all about proving that the maintenance intervals had been in compliance. For example, a long-range plan of upgrades might lead an entity to ignore required maintenance; retaining the evidence of prior maintenance that existed before any retirements and upgrades proves compliance with the standard.

What does this Maintenance Standard say about commissioning? Is it necessary to have documentation in your maintenance history of the completion of commission testing?

This standard does not establish requirements for commission testing. Commission testing includes all testing activities necessary to conclude that a Facility has been built in accordance with design. While a thorough commission testing program would include, either directly or indirectly, the verification of all those Protection System attributes addressed by the maintenance activities specified in the Tables of PRC-005-2, verification of the a[KMM1]dequacy of initial installation necessitates the performance of testing and inspections that go well beyond these routine maintenance activities. For example, commission testing might set baselines for future tests; perform acceptance tests and/or warranty tests; utilize testing methods that are not generally done routinely like staged-Fault-tests.

However, many of the Protection System attributes which are verified during commission testing are not subject to age related or service related degradation, and need not be re-verified within an ongoing maintenance program. Example – it is not necessary to re-verify correct terminal strip wiring on an ongoing basis.

PRC-005-2 assumes that thorough commission testing was performed prior to a Protection System being placed in service. PRC-005-2 requires performance of maintenance activities that are deemed necessary to detect and correct plausible age and service related degradation of ~~Component~~components, such that a properly built and commission tested Protection System will continue to function as designed over its service life.

It should be noted that commission testing frequently is performed by a different organization than that which is responsible for the ongoing maintenance of the Protection System. Furthermore, the commission testing activities will not necessarily correlate directly with the maintenance activities required by the standard. As such, it is very likely that commission testing records will deviate significantly from maintenance records in both form and content; and, therefore, it is not necessary to maintain commission testing records within the maintenance program documentation.

Notwithstanding the differences in records, an entity would be wise to retain commissioning records to show a maintenance start date. (See below). An entity that requires that their commissioning tests have, at a minimum, the requirements of PRC-005-2 would help that entity prove time interval maximums by setting the initial time clock.

How do you determine the initial due date for maintenance?

The initial due date for maintenance should be based upon when a Protection System was tested. Alternatively, an entity may choose to use the date of completion of the commission testing of the Protection System ~~Component~~component and the system was placed into service as the starting point in determining its first maintenance due dates. Whichever method is chosen, for newly installed Protection Systems the ~~Component~~components should not be placed into service until minimum maintenance activities have taken place.

It is conceivable that there can be a (substantial) difference in time between the date of testing, as compared to the date placed into service. The use of the "Calendar Year" language can help determine the next due date without too much concern about being non-compliant for missing test dates by a small amount (provided your dates are not already at the end of a year). However, if there is a substantial amount of time difference between testing and in-service dates, then the testing date should be followed because it is the degradation of ~~Component~~components that is the concern. While accuracy fluctuations may decrease when ~~Component~~components are not energized, there are cases when degradation can take place, even though the device is not energized. Minimizing the time between commissioning tests and in-service dates will help.

If I miss two battery inspections four times out of 100 Protection System ~~Component~~components on my transmission system, does that count as 2% ~~percent~~ or 8% ~~percent~~ when counting Violation Severity Level (VSL) for R3?

The entity failed to complete its scheduled program on two of its 100 Protection System ~~Component~~components, which would equate to 2%~~two percent~~ for application to the VSL Table for Requirement R3. This VSL is written to compare missed ~~Component~~components to total ~~Component~~components. In this case two ~~Component~~components out of 100 were missed, or 2%~~two percent~~.

How do I achieve a "grace period" without being out of compliance?

The objective here is to create a time extension within your own PSMP that still does not violate the maximum time intervals stated in the standard. Remember that the maximum time intervals listed in the Tables cannot be extended.

For the purposes of this example, concentrating on just unmonitored protective relays – Table 1-1 specifies a maximum time interval (between the mandated maintenance activities) of six calendar years. Your plan must ensure that your unmonitored relays are tested at least once every six calendar years. You could, within your PSMP, require that your unmonitored relays be tested every four calendar years, with a maximum allowable time extension of 18 calendar months. This allows an entity to have deadlines set for the auto-generation of work orders, but still has the flexibility in scheduling complex work schedules. This also allows for that 18 calendar months to act as a buffer, in effect a grace period within your PSMP, in the event of unforeseen events. You will note that this example of a maintenance plan interval has a planned time of four years; it also has a built-in time extension allowed within the PSMP, and yet does not exceed the maximum time interval allowed by the standard. So while there are no time extensions allowed beyond the standard, an entity can still have substantial flexibility to maintain their Protection System ~~Component~~components.

8.3 Basis for Table 1 Intervals

When developing the original *Protection System Maintenance – A Technical Reference* in 2007, the SPCTF collected all available data from Regional Entities (REs) on time intervals

recommended for maintenance and test programs. The recommendations vary widely in categorization of relays, defined maintenance actions, and time intervals, precluding development of intervals by averaging. The SPCTF also reviewed the 2005 Report [2] of the IEEE Power System Relaying Committee Working Group I-17 (Transmission Relay System Performance Comparison). Review of the I-17 report shows data from a small number of utilities, with no company identification or means of investigating the significance of particular results.

To develop a solid current base of practice, the SPCTF surveyed its members regarding their maintenance intervals for electromechanical and microprocessor relays, and asked the members to also provide definitively-known data for other entities. T-he survey represented 470 GW of peak Load, or 4%~~four percent~~ of the NERC peak Load. Maintenance interval averages were compiled by weighting reported intervals according to the size (based on peak Load) of the reporting utility. Thus, the averages more accurately represent practices for the large populations of Protection Systems used across the NERC regions.

The results of this survey with weighted averaging indicate maintenance intervals of five years for electromechanical or solid state relays, and seven years for unmonitored microprocessor relays.

A number of utilities have extended maintenance intervals for microprocessor relays beyond seven years, based on favorable experience with the particular products they have installed. To provide a technical basis for such extension, the SPCTF authors developed a recommendation of 10 years using the Markov modeling approach from [1], as summarized in Section 8.4. The results of this modeling depend on the completeness of self-testing or monitoring. Accordingly, this extended interval is allowed by Table 1, only when such relays are monitored as specified in the attributes of monitoring contained in Tables 1-1 through 1-5 and Table 2. Monitoring is capable of reporting Protection System health issues that are likely to affect performance within the 10 year time interval between verifications.

It is important to note that, according to modeling results, Protection System availability barely changes as the maintenance interval is varied below the 10-year mark. Thus, reducing the maintenance interval does not improve Protection System availability. With the assumptions of the model regarding how maintenance is carried out, reducing the maintenance interval actually degrades Protection System availability.

8.4 Basis for Extended Maintenance Intervals for Microprocessor Relays

Table 1 allows maximum verification intervals that are extended based on monitoring level. The industry has experience with self-monitoring microprocessor relays that leads to the Table 1 value for a monitored relay, as explained in Section 8.3. To develop a basis for the maximum interval for monitored relays in their *Protection System Maintenance – A Technical Reference*, the SPCTF used the methodology of Reference [1], which specifically addresses optimum routine maintenance intervals. The Markov modeling approach of [1] is judged to be valid for the design and typical failure modes of microprocessor relays.

The SPCTF authors ran test cases of the Markov model to calculate two key probability measures:

- Relay Unavailability - the probability that the relay is out of service due to failure or maintenance activity while the power system Element to be protected is in service.

- Abnormal Unavailability - the probability that the relay is out of service due to failure or maintenance activity when a Fault occurs, leading to failure to operate for the Fault.

The parameter in the Markov model that defines self-monitoring capability is ST (for self test). ST = 0 if there is no self-monitoring; ST = 1 for full monitoring. Practical ST values are estimated to range from .75 to .95. The SPCTF simulation runs used constants in the Markov model that were the same as those used in [1] with the following exceptions:

Sn, Normal tripping operations per hour = 21600 (reciprocal of normal Fault clearing time of 10 cycles)

Sb, Backup tripping operations per hour = 4320 (reciprocal of backup Fault clearing time of 50 cycles)

Rc, Protected ~~Component~~component repairs per hour = 0.125 (8 hours to restore the power system)

Rt, Relay routine tests per hour = 0.125 (8 hours to test a Protection System)

Rr, Relay repairs per hour = 0.08333 (12 hours to complete a Protection System repair after failure)

Experimental runs of the model showed low sensitivity of optimum maintenance interval to these parameter adjustments.

The resulting curves for relay unavailability and abnormal unavailability versus maintenance interval showed a broad minimum (optimum maintenance interval) in the vicinity of 10 years – the curve is flat, with no significant change in either unavailability value over the range of 9, 10, or 11 years. This was true even for a relay mean time between Failures (MTBF) of 50 years, much lower than MTBF values typically published for these relays. Also, the Markov modeling indicates that both the relay unavailability and abnormal unavailability actually become higher with more frequent testing. This shows that the time spent on these more frequent tests yields no failure discoveries that approach the negative impact of removing the relays from service and running the tests.

The PSMT SDT discussed the practical need for "time-interval extensions" or "grace periods" to allow for scheduling problems that resulted from any number of business contingencies. The time interval discussions also focused on the need to reflect industry norms surrounding Generator outage frequencies. Finally, it was again noted that FERC Order 693 demanded maximum time intervals. "Maximum time intervals" by their very term negates any "time-interval extension" or "grace periods." To recognize the need to follow industry norms on Generator outage frequencies and accommodate a form of time-interval extension, while still following FERC Order 693, the Standard Drafting Team arrived at a six-year interval for the electromechanical relay, instead of the five-year interval arrived at by the SPCTF. The PSMT SDT has followed the FERC directive for a *maximum* time interval and has determined that no extensions will be allowed. Six years has been set for the maximum time interval between manual maintenance activities. This maximum time interval also works well for maintenance cycles that have been in use in generator plants for decades.

For monitored relays, the PSMT SDT notes that the SPCTF called for 10 years as the interval between maintenance activities. This 10-year interval was chosen, even though there was "…no significant change in unavailability value over the range of 9, 10, or 11 years. This was

true even for a relay Mean Time between Failures (MTBF) of 50 years…" The Standard Drafting Team again sought to align maintenance activities with known successful practices and outage schedules. The Standard does not allow extensions on any ~~Component~~component of the Protection System; thus, the maximum allowed interval for these ~~Component~~components has been set to 12 years. Twelve years also fits well into the traditional maintenance cycles of both substations and generator plants.

Also of note is the Table's use of the term "Calendar" in the column for "Maximum Maintenance Interval." The PSMT SDT deemed it necessary to include the term "Calendar" to facilitate annual maintenance planning, scheduling and implementation. This need is the result of known occurrences of system requirements that could cause maintenance schedules to be missed by a few days or weeks. The PSMT SDT chose the term "Calendar" to preclude the need to have schedules be met to the day. An electromechanical protective relay that is maintained in year number one need not be revisited until six years later (year number seven). For example, a relay was maintained April 10, 2008; maintenance would need to be completed no later than December 31, 2014.

Though not a requirement of this standard, to stay in line with many Compliance Enforcement Agencies audit processes an entity should define, within their own PSMP, the entity's use of terms like annual, calendar year, etc. Then, once this is within the PSMP, the entity should abide by their chosen language.

9. Performance-Based Maintenance Process

In lieu of using the Table 1 intervals, a Performance-Based Maintenance process may be used to establish maintenance intervals (*PRC-005 Attachment A Criteria for a Performance-Based Protection System Maintenance Program*). A Performance-Based Maintenance process may justify longer maintenance intervals, or require shorter intervals relative to Table 1. In order to use a Performance-Based Maintenance process, the documented maintenance program must include records of repairs, adjustments, and corrections to covered Protection Systems in order to provide historical justification for intervals, other than those established in Table 1. Furthermore, the asset owner must regularly analyze these records of corrective actions to develop a ranking of causes. Recurrent problems are to be highlighted, and remedial action plans are to be documented to mitigate or eliminate recurrent problems.

Entities with Performance-Based Maintenance track performance of Protection Systems, demonstrate how they analyze findings of performance failures and aberrations, and implement continuous improvement actions. Since no maintenance program can ever guarantee that no malfunction can possibly occur, documentation of a Performance-Based Maintenance program would serve the utility well in explaining to regulators and the public a Misoperation leading to a major System outage event.

A Performance-Based Maintenance program requires auditing processes like those included in widely used industrial quality s~~S~~ystems (such as ***ISO 9001-2000, Quality M~~m~~anagement Systems — Requirements;*** or applicable parts of the NIST Baldridge National Quality Program). The audits periodically evaluate:

- The completeness of the documented maintenance process
- Organizational knowledge of and adherence to the process
- Performance metrics and documentation of results
- Remediation of issues
- Demonstration of continuous improvement.

In order to opt into a Performance-Based Maintenance (PBM) program, the asset owner must first sort the various Protection System ~~Component~~components into population segments. Any population segment must be comprised of at least 60 individual units; if any asset owner opts for PBM, but does not own 60 units to comprise a population, then that asset owner may combine data from other asset owners until the needed 60 units is aggregated. Each population segment must be composed of a grouping of Protection Systems or ~~Component~~components of a consistent design standard or particular model or type from a single manufacturer and subjected to similar environmental factors. For example: One segment cannot be comprised of both GE & Westinghouse electro-mechanical lock-out relays; likewise, one segment cannot be comprised of 60 GE lock-out relays, 30 of which are in a dirty environment, and the remaining 30 from a clean environment. This PBM process cannot be applied to batteries, but can be applied to all other ~~Component~~components of a Protection System, including (but not limited to) specific battery chargers, instrument transformers, trip coils and/or control circuitry (etc.).

9.1 Minimum Sample Size

Large Sample Size

An assumption that needs to be made when choosing a sample size is "the sampling distribution of the sample mean can be approximated by a normal probability distribution." The Central Limit Theorem states: "In selecting simple random samples of size *n* from a population, the sampling distribution of the sample mean *x* can be approximated by a normal probability distribution as the sample size becomes large." (Essentials of Statistics for Business and Economics, Anderson, Sweeney, Williams, 2003.)

To use the Central Limit Theorem in statistics, the population size should be large. The references below are supplied to help define what is large.

> "… whenever we are using a large simple random sample (rule of thumb: n>=30), the central limit theorem enables us to conclude that the sampling distribution of the sample mean can be approximated by a normal distribution." (Essentials of Statistics for Business and Economics, Anderson, Sweeney, Williams, 2003.)
>
> "If samples of size n, when n>=30, are drawn from any population with a mean *u* and a standard deviation σ, the sampling distribution of sample means approximates a normal distribution. The greater the sample size, the better the approximation." (Elementary Statistics - Picturing the World, Larson, Farber, 2003.)
>
> "The sample size is large (generally n>=30)… (Introduction to Statistics and Data Analysis - Second Edition, Peck, Olson, Devore, 2005.)
>
> "… the normal is often used as an approximation to the *t* distribution in a test of a null hypothesis about the mean of a normally distributed population when the population variance is estimated from a relatively large sample. A sample size exceeding 30 is often given as a minimal size in this connection." (Statistical Analysis for Business Decisions, Peters, Summers, 1968.)

Error of Distribution Formula

Beyond the large sample size discussion above, a sample size requirement can be estimated using the bound on the Error of Distribution Formula when the expected result is of a "Pass/Fail" format and will be between 0 and 1.0.

The Error of Distribution Formula is:

$$B = z\sqrt{\frac{\pi(1-\pi)}{n}}$$

Where:

B = bound on the error of distribution (allowable error)

z = standard error

π = expected failure rate

n = sample size required

Solving for n provides:

$$n = \pi(1-\pi)\left(\frac{z}{B}\right)^2$$

Minimum Population Size to use Performance-Based Program

One entity's population of ~~Component~~components should be large enough to represent a sizeable sample of a vendor's overall population of manufactured devices. For this reason, the following assumptions are made:

B = 5%~~five percent~~

z = 1.96 (This equates to a 95%~~ninety-five percent~~ confidence level)

π = ~~four percent~~4%

Using the equation above, n=59.0.

Minimum Sample Size to evaluate Performance-Based Program

The number of ~~Component~~components that should be included in a sample size for evaluation of the appropriate testing interval can be smaller because a lower confidence level is acceptable since the sample testing is repeated or updated annually. For this reason, the following assumptions are made:

B = 5%~~five percent~~

z = 1.44 (~~eighty-five percent~~85% confidence level)

π = ~~four percent~~4%

Using the equation above, n=31.8.

Recommendation

Based on the above discussion, a sample size should be at least 30 to allow use of the equation mentioned. Using this and the results of the equation, the following numbers are recommended (and required within the standard):

Minimum Population Size to use Performance-Based Maintenance Program = 60

Minimum Sample Size to evaluate Performance-Based Program = 30.

Once the population segment is defined, then maintenance must begin within the intervals as outlined for the device described in the Tables 1-1 through 1-5. Time intervals can be lengthened provided the last year's worth of ~~Component~~components tested (or the last 30 units maintained, whichever is more) had fewer than 4%~~four percent~~ Countable Events. It is notable that 4%~~four percent~~ is specifically chosen because an entity with a small population (30 units) would have to adjust its time intervals between maintenance if more than one Countable Event was found to have occurred during the last analysis period. A smaller percentage would require that entity to adjust the time interval between maintenance activities if even one unit is found out of tolerance or causes a Misoperation.

The minimum number of units that can be tested in any given year is 5%~~five percent~~ of the population. Note that this 5%~~five percent~~ threshold sets a practical limitation on total length of time between intervals at 20 years.

If at any time the number of Countable Events equals or exceeds 4%~~four percent~~ of the last year's tested ~~Component~~components (or the last 30 units maintained, whichever is more), then the time period between manual maintenance activities must be decreased. There is a time limit on reaching the decreased time at which the Countable Events is less than 4%~~four percent~~; this must be attained within three years.

9.2 Frequently Asked Questions:

I'm a small entity and cannot aggregate a population of Protection System ~~Component~~components to establish a segment required for a Performance-Based Protection System Maintenance Program. How can I utilize that opportunity?

Multiple asset owning entities may aggregate their individually owned populations of individual Protection System ~~Component~~components to create a segment that crosses ownership boundaries. All entities participating in a joint program should have a single documented joint management process, with consistent Protection System Maintenance Programs (practices, maintenance intervals and criteria), for which the multiple owners are individually responsible with respect to the requirements of the Standard. The requirements established for Performance-Based Maintenance must be met for the overall aggregated program on an ongoing basis.

The aggregated population should reflect all factors that affect consistent performance across the population, including any relevant environmental factors such as geography, power-plant vs. substation, and weather conditions.

Can an owner go straight to a Performance-Based Maintenance program schedule, if they have previously gathered records?

Yes. An owner can go to a Performance-Based Maintenance program immediately. The owner will need to comply with the requirements of a Performance-Based Maintenance program as listed in the Standard. Gaps in the data collected will not be allowed; therefore, if an owner finds that a gap exists such that they cannot prove that they have collected the data as required for a Performance-Based Maintenance program then they will need to wait until they can prove compliance.

When establishing a Performance-Based Maintenance program, can I use test data from the device manufacturer, or industry survey results, as results to help establish a basis for my Performance-Based intervals?

No, you must use actual in-service test data for the ~~Component~~components in the segment.

What types of Misoperations or events are not considered Countable Events in the Performance-Based Protection System Maintenance (PBM) Program?

Countable Events are intended to address conditions that are attributed to hardware failure or calibration failure; that is, conditions that reflect deteriorating performance of the ~~Component~~component. These conditions include any condition where the device previously worked properly, then, due to changes within the device, malfunctioned or degraded to the point that re-calibration (to within the entity's tolerance) was required.

For this purpose of tracking hardware issues, human errors resulting in Protection System Misoperations during system installation or maintenance activities are not considered

Countable Events. Examples of excluded human errors include relay setting errors, design errors, wiring errors, inadvertent tripping of devices during testing or installation, and misapplication of Protection System ~~Component~~components. Examples of misapplication of Protection System ~~Component~~components include wrong CT or PT tap position, protective relay function misapplication, and ~~Component~~components not specified correctly for their installation. Obviously, if one is setting up relevant data about hardware failures then human failures should be eliminated from the hardware performance analysis.

One example of human-error is not pertinent data might be in the area of testing "86" lock-out relays (LOR). "Entity A" has two types of LOR's type "X" and type "Y"; they want to move into a performance based maintenance interval. They have 1000 of each type, so the population variables are met. During electrical trip testing of all of their various schemes over the initial six-year interval they find zero type "X" failures, but human error led to tripping a BES Element 100 times; they find 100 type "Y" failures and had an additional 100 human-error caused tripping incidents. In this example the human-error caused Misoperations should not be used to judge the performance of either type of LOR. Analysis of the data might lead "Entity A" to change time intervals. Type "X" LOR can be placed into extended time interval testing because of its low failure rate (zero failures) while Type "Y" would have to be tested more often than every 6 calendar years (100 failures divided by 1000 units exceeds the 4%~~four percent~~ tolerance level).

Certain types of Protection System ~~Component~~component errors that cause Misoperations are not considered Countable Events. Examples of excluded ~~Component~~component errors include device malfunctions that are correctable by firmware upgrades and design errors that do not impact protection function.

What are some examples of methods of correcting segment perfomance for Performance-Based Maintenance?

There are a number of methods that may be useful for correcting segment performance for mal-performing segments in a Performance-Based Maintenance system. Some examples are listed below.

- The maximum allowable interval, as established by the Performance-Based Maintenance system, can be decreased. This may, however, be slow to correct the performance of the segment.
- Identifiable sub-groups of ~~Component~~components within the established segment, which have been identified to be the mal-performing portion of the segment, can be broken out as an independent segment for target action. Each resulting segment must satisfy the minimum population requirements for a Performance-Based Maintenance program in order to remain within the program.
- Targeted corrective actions can be taken to correct frequently occurring problems. An example would be replacement of capacitors within electromechanical distance relays if bad capacitors were determined to be the cause of the mal-performance.
- ~~Component~~components within the mal-performing segment can be replaced with other ~~Component~~components (electromechanical distance relays with microprocessor relays, for example) to remove the mal-performing segment.

If I find (and correct) a Unresolved Maintenance Issue as a result of a Misoperation investigation (Re: PRC-004), how does this affect my Performance-Based Maintenance program?

If you perform maintenance on a Protection System ~~Component~~component for any reason (including as part of a PRC-004 required Misoperation investigation/corrective action), the actions performed can count as a maintenance activity provided the activities in the relevant Tables have been done, and, if you desire, "reset the clock" on everything you've done. In a Performance-Based Maintenance program, you also need to record the Unresolved Maintenance Issue as a Countable Event within the relevant ~~Component~~component group segment and use it in the analysis to determine your correct Performance-Based Maintenance interval for that ~~Component~~component group. Note that "resetting the clock" should not be construed as interfering with an entity's routine testing schedule because the "clock-reset" would actually make for a decreased time interval by the time the next routine test schedule comes around.

For example a relay scheme, consisting of four relays, is tested on 1-1-11 and the PSMP has a time interval of 3 calendar years with an allowable extension of 1 calendar year. The relay would be due again for routine testing before the end of the year 2015. This mythical relay scheme has a Misoperation on 6-1-12 that points to one of the four relays as bad. Investigation proves a bad relay and a new one is tested and installed in place of the original. This replacement relay actually could be retested before the end of the year 2016 (clock-reset) and not be out of compliance. This requires tracking maintenance by individual relays and is allowed. However, many companies schedule maintenance in other ways like by substation or by circuit breaker or by relay scheme. By these methods of tracking maintenance that "replaced relay" will be retested before the end of the year 2015. This is also acceptable. In no case was a particular relay tested beyond the PSMP of four years max, nor was the 6 year max of the Standard exceeded. The entity can reset the clock if they desire or the entity can continue with original schedules and, in effect, test even more frequently.

Why are batteries excluded from PBM? What about exclusion of batteries from condition based maintenance?

Batteries are the only e~~E~~lement of a Protection System that is a perishable item with a shelf life. As a perishable item batteries require not only a constant float charge to maintain their freshness (charge), but periodic inspection to determine if there are problems associated with their aging process and testing to see if they are maintaining a charge or can still deliver their rated output as required.

Besides being perishable, a second unique feature of a battery that is unlike any other Protection System e~~E~~lement is that a battery uses chemicals, metal alloys, plastics, welds, and bonds that must interact with each other to produce the constant dc source required for Protection Systems, undisturbed by ac system Disturbances.

No type of battery manufactured today for Protection System application is free from problems that can only be detected over time by inspection and test. These problems can arise from variances in the manufacturing process, chemicals and alloys used in the construction of the individual cells, quality of welds and bonds to connect the ~~Component~~components, the plastics used to make batteries and the cell forming process for the individual battery cells.

Other problems that require periodic inspection and testing can result from transportation from the factory to the job site, length of time before a charge is put on the battery, the method of installation, the voltage level and duration of equalize charges, the float voltage level used, and the environment that the battery is installed in.

All of the above mentioned factors and several more not discussed here are beyond the control of the Functional Entities that want to use a Performance-Based Protection System Maintenance (PBM) program. These inherent variances in the aging process of a battery cell make establishment of a designated segment based on manufacturer and type of battery impossible.

The whole point of PBM is that if all variables are isolated then common aging and performance criteria would be the same. However, there are too many variables in the electrochemical process to completely isolate all of the performance-changing criteria.

Similarly, Functional Entities that want to establish a condition-based maintenance program using the highest levels of monitoring, resulting in the least amount of hands-on maintenance activity, cannot completely eliminate some periodic maintenance of the battery used in a station dc supply. Inspection of the battery is required on a Maximum Maintenance Interval listed in the tables due to the aging processes of station batteries. However, higher degrees of monitoring of a battery can eliminate the requirement for some periodic testing and some inspections (see Table 1-4).

Please provide an example of the calculations involved in extending maintenance time intervals using PBM.

Entity has 1000 GE-HEA lock-out relays; this is greater than the minimum sample requirement of 60. They start out testing all of the relays within the prescribed Table requirements (6 year max) by testing the relays every 5 years. The entity's plan is to test 200 units per year; this is greater than the minimum sample size requirement of 30. For the sake of example only the following will show 6 failures per year, reality may well have different numbers of failures every year. PBM requires annual assessment of failures found per units tested. After the first year of tests the entity finds 6 failures in the 200 units tested. 6/200= 3% failure rate. This entity is now allowed to extend the maintenance interval if they choose. The entity chooses to extend the maintenance interval of this population segment out to 10 years. This represents a rate of 100 units tested per year; entity selects 100 units to be tested in the following year. After that year of testing these 100 units the entity again finds 6 failed units. 6/100= 6% failures. This entity has now exceeded the acceptable failure rate for these devices and must accelerate testing of all of the units at a higher rate such that the failure rate is found to be less than 4%~~four percent~~ per year; the entity has three years to get this failure rate down to 4%~~four percent~~ or less (per year). In response to the 6% failure rate, the entity decreases the testing interval to 8 years. This means that they will now test 125 units per year (1000/8). The entity has just two years left to get the test rate corrected.

After a year, they again find six failures out of the 125 units tested. 6/125= 5%~~five percent~~ failures. In response to the 5%~~five percent~~ failure rate, the entity decreases the testing interval to seven years. This means that they will now test 143 units per year (1000/7). The entity has just one year left to get the test rate corrected. After a year, they again find six failures out of the 143 units tested. 6/143= 4.2% failures.

(Note that the entity has tried five years and they were under the 4%~~four percent~~ limit and they tried seven years and they were over the 4%~~four percent~~ limit. They must be back at 4%~~four percent~~ failures or less in the next year so they might simply elect to go back to five years.)

Instead, in response to the 5%~~five percent~~ failure rate, the entity decreases the testing interval to six years. This means that they will now test 167 units per year (1000/6). After a year, they again find six failures out of the 167 units tested. 6/167= 3.6% failures. Entity found that they could maintain the failure rate at no more than 4%~~four percent~~ failures by maintaining the testing interval at six years or less. Entity chose six-year interval and effectively extended their TBM (five years) program by 20%~~ percent~~.

A note of practicality is that an entity will probably be in better shape to lengthen the intervals between tests if the failure rate is less than 2%~~two percent~~. But the requirements allow for annual adjustments, if the entity desires. As a matter of maintenance management, an ever-changing test rate (units tested/year) may be un-workable.

Note that the "5%~~five percent~~ of ~~Component~~components" requirement effectively sets a practical limit of 20 year maximum PBM interval. Also of note is the "3 years" requirement; an entity might arbitrarily extend time intervals from six years to 20 years. In the event that an entity finds a failure rate greater than ~~four percent~~4%, then the test rate must be accelerated such that within three years the failure rate must be brought back down to ~~four percent~~4% or less.

Here is a table that demonstrates the values discussed:

Year #	Total Population (P)	Test Interval (I)	Units to be Tested (U= P/I)	# of Failures Found (F)	Failure Rate (=F/U)	Decision to Change Interval Yes or No	Interval Chosen
1	1000	5 yrs	200	6	3%	Yes	10 yrs
2	1000	10 yrs	100	6	6%	Yes	8 yrs
3	1000	8 yrs	125	6	5%	Yes	7 yrs
4	1000	7 yrs	143	6	4.2%	Yes	6 yrs
5	1000	6 yrs	167	6	3.6%	No	6 yrs

Please provide an example of the calculations involved in extending maintenance time intervals using PBM for control circuitry.

Note that the following example captures "Control Circuitry" as all of the trip paths associated with a particular trip coil of a circuit breaker. An entity is not restricted to this method of counting control circuits. Perhaps another method an entity would prefer would be to simply track every individual (parallel) trip path. Or perhaps another method would be to track all of the trip outputs from a specific (set) of relays protecting a specific e~~E~~lement. Under the included definition of "~~Component~~component":

The designation of what constitutes a control circuit ~~Component~~component is very dependent upon how an entity performs and tracks the testing of the control circuitry. Some entities test their control circuits on a breaker basis whereas others test their circuitry on a local zone of protection basis. Thus, entities are allowed the latitude to designate their own definitions of control circuit ~~Component~~components. Another example of where the entity has some discretion on determining what constitutes a single ~~Component~~component is the voltage and current sensing devices, where the entity may choose either to designate a full three-phase set of such devices or a single device as a single ~~Component~~component.

And in Attachment A (PBM) the definition of Segment:

Segment – *Protection Systems or ~~Component~~components of a consistent design standard, or a particular model or type from a single manufacturer that typically share other common e~~E~~lements. Consistent performance is expected across the entire population of a segment. A segment must contain at least sixty (60) individual ~~Component~~components.*

Example:

Entity has 1,000 circuit breakers, all of which have two trip coils, for a total of 2,000 trip coils; if all circuitry was designed and built with a consistent (internal entity) standard, then this is greater than the minimum sample requirement of 60.

For the sake of further example, the following facts are given:

Half of all relay panels (500) were built 40 years ago by an outside contractor, consisted of asbestos wrapped 600V-insulation panel wiring, and the cables exiting the control house are THHN pulled in conduit direct to exactly half of all of the various circuit breakers. All of the relay panels and cable pulls were built with consistent standards and consistent performance standard expectations within the segment (which is greater than 60). Each relay panel has redundant microprocessor (MPC) relays (retrofitted); each MPC relay supplies an individual trip output to each of the two trip coils of the assigned circuit breaker.

Approximately 35 years ago, the entity developed their own internal construction crew and now builds all of their own relay panels from parts supplied from vendors that meet the entity's specifications, including SIS 600V insulation wiring and copper-sheathed cabling within the direct conduits to circuit breakers. The construction crew uses consistent standards in the construction. This newer segment of their control circuitry population is different than the original segment, consistent (standards, construction and performance expectations) within the new segment and constitutes the remainder of the entity's population (another 500 panels and the cabling to the remaining 500 circuit breakers). Each relay panel has redundant microprocessor (MPC) relays; each MPC relay supplies an individual trip output to each of the two trip coils of the assigned circuit breaker. Every trip path in this newer segment has a device

that monitors the voltage directly across the trip contacts of the MPC relays and alarms via RTU and SCADA to the operations control room. This monitoring device, when not in alarm, demonstrates continuity all the way through the trip coil, cabling and wiring back to the trip contacts of the MPC relay.

The entity is tracking 2,000 trip coils (each consisting of multiple trip paths) in each of these two segments. But half of all of the trip paths are monitored; therefore, the trip paths are continuously tested and the circuit will alarm when there is a failure. These alarms have to be verified every 12 years for correct operation.

The entity now has 1,000 trip coils (and associated trip paths) remaining that they have elected to count as control circuits. The entity has instituted a process that requires the verification of every trip path to each trip coil (one unit), including the electrical activation of the trip coil. (The entity notes that the trip coils will have to be tripped electrically more often than the trip path verification, and is taking care of this activity through other documentation of Real-time Fault operations.)

They start out testing all of the trip coil circuits within the prescribed Table requirements (12-year max) by testing the trip circuits every 10 years. The entity's plan is to test 100 units per year; this is greater than the minimum sample size requirement of 30. For the sake of example only, the following will show three failures per year; reality may well have different numbers of failures every year. PBM requires annual assessment of failures found per units tested. After the first year of tests, the entity finds three failures in the 100 units tested. 3/100= ~~three percent~~3% failure rate.

This entity is now allowed to extend the maintenance interval, if they choose. The entity chooses to extend the maintenance interval of this population segment out to 20 years. This represents a rate of 50 units tested per year; entity selects 50 units to be tested in the following year. After that year of testing these 50 units, the entity again finds three failed units. 3/50= ~~six percent~~6% failures.

This entity has now exceeded the acceptable failure rate for these devices and must accelerate testing of all of the units at a higher rate, such that the failure rate is found to be less than ~~four percent~~4% per year; the entity has three years to get this failure rate down to ~~four percent~~4% or less (per year).

In response to the ~~six percent~~6% failure rate, the entity decreases the testing interval to 16 years. This means that they will now test 63 units per year (1000/16). The entity has just two years left to get the test rate corrected. After a year, they again find three failures out of the 63 units tested. 3/63= 4.76% failures.

In response to the >~~four percent~~4% failure rate, the entity decreases the testing interval to 14 years. This means that they will now test 72 units per year (1000/14). The entity has just one year left to get the test rate corrected. After a year, they again find three failures out of the 72 units tested. 3/72= 4.2% failures.

(Note that the entity has tried 10 years, and they were under the ~~four percent~~4% limit; and they tried 14 years, and they were over the ~~four percent~~4% limit. They must be back at ~~four~~ 4%~~percent~~ failures or less in the next year, so they might simply elect to go back to 10 years.)

Instead, in response to the 4.2% failure rate, the entity decreases the testing interval to 12 years. This means that they will now test 84 units per year (1000/12). After a year, they again find three failures out of the 84 units tested. 3/84= 3.6% failures.

Entity found that they could maintain the failure rate at no more than ~~four percent~~4% failures by maintaining the testing interval at 12 years or less. Entity chose 12-year interval, and effectively extended their TBM (10 years) program by 20%~~ percent~~.

A note of practicality is that an entity will probably be in better shape to lengthen the intervals between tests if the failure rate is less than 2%~~two percent~~. But the requirements allow for annual adjustments if the entity desires. As a matter of maintenance management, an ever-changing test rate (units tested / year) may be un-workable.

Note that the "5%~~five percent~~ of ~~Component~~components" requirement effectively sets a practical limit of 20-year maximum PBM interval. Also of note is the "3 years" requirement; an entity might arbitrarily extend time intervals from six years to 20 years. In the event that an entity finds a failure rate greater than 4%~~four percent~~, then the test rate must be accelerated such that within three years the failure rate must be brought back down to 4%~~four percent~~ or less.

Here is a table that demonstrates the values discussed:

Year #	Total Population (P)	Test Interval (I)	Units to be Tested (U= P/I)	# of Failures Found (F)	Failure Rate (=F/U)	Decision to Change Interval Yes or No	Interval Chosen
1	1000	10 yrs	100	3	3%	Yes	20 yrs
2	1000	20 yrs	50	3	6%	Yes	16yrs
3	1000	16 yrs	63	3	4.8%	Yes	14 yrs
4	1000	14 yrs	72	3	4.2%	Yes	12 yrs
5	1000	12 yrs	84	3	3.6%	No	12 yrs

Please provide an example of the calculations involved in extending maintenance time intervals using PBM for voltage and current sensing devices.

Note that the following example captures "voltage and current inputs to the protective relays" as all of the various current transformer and potential transformer signals associated with a particular set of relays used for protection of a specific E~~e~~lement. This entity calls this set of protective relays a "Relay Scheme." Thus, this entity chooses to count PT and CT signals as a group instead of individually tracking maintenance activities to specific bushing CT's or specific PT's. An entity is not restricted to this method of counting voltage and current devices, signals and paths. Perhaps another method an entity would prefer would be to simply track every individual PT and CT. Note that a generation maintenance group may well select the latter because they may elect to perform routine off-line tests during generator outages, whereas a transmission maintenance group might create a process that utilizes Real-time system values measured at the relays. Under the included definition of "~~Component~~component":

The designation of what constitutes a control circuit ~~Component~~component is very dependent upon how an entity performs and tracks the testing of the control circuitry. Some entities test their control circuits on a breaker basis whereas others test their circuitry on a local zone of protection basis. Thus, entities are allowed the latitude to designate their own definitions of control circuit ~~Component~~components. Another example of where the entity has some discretion on determining what constitutes a single ~~Component~~component is the voltage and current sensing devices, where the entity may choose either to designate a full three-phase set of such devices or a single device as a single ~~Component~~component.

And in Attachment A (PBM) the definition of Segment:

Segment – *Protection Systems or ~~Component~~components of a consistent design standard, or a particular model or type from a single manufacturer that typically share other common e~~E~~lements. Consistent performance is expected across the entire population of a segment. A segment must contain at least sixty (60) individual ~~Component~~components.*

Example:

Entity has 2000 "Relay Schemes," all of which have three current signals supplied from bushing CTs, and three voltage signals supplied from substation bus PT's. All cabling and circuitry was designed and built with a consistent (internal entity) standard, and this population is greater than the minimum sample requirement of 60.

For the sake of further example the following facts are given:

Half of all relay schemes (1,000) are supplied with current signals from ANSI STD C800 bushing CTs and voltage signals from PTs built by ACME Electric MFR CO. All of the relay panels and cable pulls were built with consistent standards, and consistent performance standard expectations exist for the consistent wiring, cabling and instrument transformers within the segment (which is greater than 60).

The other half of the entity's relay schemes have MPC relays with additional monitoring built-in that compare DNP values of voltages and currents (or Watts and VARs), as interpreted by the MPC relays and alarm for an entity-accepted tolerance level of accuracy. This newer segment of their "Voltage and Current Sensing" population is different than the original segment, consistent (standards, construction and performance expectations) within the new segment and constitutes the remainder of the entity's population.

The entity is tracking many thousands of voltage and current signals within 2,000 relay schemes (each consisting of multiple voltage and current signals) in each of these two segments. But half of all of the relay schemes voltage and current signals are monitored; therefore, the voltage and current signals are continuously tested and the circuit will alarm when there is a failure; these alarms have to be verified every 12 years for correct operation.

The entity now has 1,000 relay schemes worth of voltage and current signals remaining that they have elected to count within their relay schemes designation. The entity has instituted a process that requires the verification of these voltage and current signals within each relay scheme (one unit).

(Please note - a problem discovered with a current or voltage signal found at the relay could be caused by anything from the relay, all the way to the signal source itself. Having many sources of problems can easily increase failure rates beyond the rate of failures of just one item (for example just PTs). It is the intent of the SDT to minimize failure rates of all of the equipment to an acceptable level; thus, any failure of any item that gets the signal from source to relay is counted. It is for this reason that the SDT chose to set the boundary at the ability of the signal to be delivered all the way to the relay.

The entity will start out measuring all of the relay scheme voltage and currents at the individual relays within the prescribed Table requirements (12 year max) by measuring the voltage and current values every 10 years. The entity's plan is to test 100 units per year; this is greater than the minimum sample size requirement of 30. For the sake of example only, the following will show three failures per year; reality may well have different numbers of failures every year. PBM requires annual assessment of failures found per units tested. After the first year of tests, the entity finds three failures in the 100 units tested. 3/100= 3%~~three percent~~ failure rate.

This entity is now allowed to extend the maintenance interval, if they choose. The entity chooses to extend the maintenance interval of this population segment out to 20 years. This represents a rate of 50 units tested per year; entity selects 50 units to be tested in the following year. After that year of testing these 50 units, the entity again finds three failed units. 3/50= 6%~~six percent~~ failures.

This entity has now exceeded the acceptable failure rate for these devices and must accelerate testing of all of the units at a higher rate, such that the failure rate is found to be less than ~~four percent~~4% per year; the entity has three years to get this failure rate down to ~~four percent~~4% or less (per year).

In response to the ~~six percent~~6% failure rate, the entity decreases the testing interval to 16 years. This means that they will now test 63 units per year (1000/16). The entity has just two years left to get the test rate corrected. After a year, they again find three failures out of the 63 units tested. 3/63= 4.76% failures.

In response to the >~~four percent~~ 4%failure rate, the entity decreases the testing interval to 14 years. This means that they will now test 72 units per year (1000/14). The entity has just one year left to get the test rate corrected. After a year, they again find three failures out of the 72 units tested. 3/72= 4.2% failures.

(Note that the entity has tried 10 years, and they were under the ~~four percent~~4% limit; and they tried 14 years, and they were over the ~~four percent~~4% limit. They must be back at ~~four percent~~4% failures or less in the next year, so they might simply elect to go back to 10 years.)

Instead, in response to the 4.2% failure rate, the entity decreases the testing interval to 12 years. This means that they will now test 84 units per year (1,000/12). After a year, they again find three failures out of the 84 units tested. 3/84= 3.6% failures.

Entity found that they could maintain the failure rate at no more than ~~four percent~~4% failures by maintaining the testing interval at 12 years or less. Entity chose 12-year interval and effectively extended their TBM (10 years) program by 20%~~ percent~~.

A note of practicality is that an entity will probably be in better shape to lengthen the intervals between tests if the failure rate is less than 2%~~two percent~~. But the requirements allow for annual adjustments, if the entity desires. As a matter of maintenance management, an ever-changing test rate (units tested/year) may be un-workable.

Note that the "5% of ~~Component~~components" requirement effectively sets a practical limit of 20-year maximum PBM interval. Also of note is the "3 years" requirement; an entity might arbitrarily extend time intervals from six years to 20 years. In the event that an entity finds a failure rate greater than 4%~~four percent~~, then the test rate must be accelerated such that within three years the failure rate must be brought back down to ~~four percent~~4% or less.

Here is a table that demonstrates the values discussed:

Year #	Total Population (P)	Test Interval (I)	Units to be Tested (U= P/I)	# of Failures Found (F)	Failure Rate (=F/U)	Decision to Change Interval Yes or No	Interval Chose
1	1000	10 yrs	100	3	3%	Yes	20 yrs
2	1000	20 yrs	50	3	6%	Yes	16yrs
3	1000	16 yrs	63	3	4.8%	Yes	14 yrs
4	1000	14 yrs	72	3	4.2%	Yes	12 yrs
5	1000	12 yrs	84	3	3.6%	No	12 yrs

10. Overlapping the Verification of Sections of the Protection System

Tables 1-1 through 1-5 require that every Protection System ~~Component~~component be periodically verified. One approach, but not the only method, is to test the entire protection scheme as a unit, from the secondary windings of voltage and current sources to breaker tripping. For practical ongoing verification, sections of the Protection System may be tested or monitored individually. The boundaries of the verified sections must overlap to ensure that there are no gaps in the verification. See Appendix A of this Supplementary Reference for additional discussion on this topic.

All of the methodologies expressed within this report may be combined by an entity, as appropriate, to establish and operate a maintenance program. For example, a Protection System may be divided into multiple overlapping sections with a different maintenance methodology for each section:

- Time-based maintenance with appropriate maximum verification intervals for categories of equipment, as given in the Tables 1-1 through 1-5;
- Monitoring as described in Tables 1-1 through 1-5;
- A Performance-Based Maintenance program as described in Section 9 above, or Attachment A of the standard;
- Opportunistic verification using analysis of Fault records, as described in Section 11

10.1 Frequently Asked Questions:

My system has alarms that are gathered once daily through an auto-polling system; this is not really a conventional SCADA system but does it meet the Table 1 requirements for inclusion as a monitored system?

Yes, provided the auto-polling that gathers the alarms reports those alarms to a location where the action can be initiated to correct the Unresolved Maintenance Issue. This location does not have to be the location of the engineer or the technician that will eventually repair the problem, but rather a location where the action can be initiated.

11. Monitoring by Analysis of Fault Records

Many users of microprocessor relays retrieve Fault event records and oscillographic records by data communications after a Fault. They analyze the data closely if there has been an apparent Misoperation, as NERC standards require. Some advanced users have commissioned automatic Fault record processing s~~S~~ystems that gather and archive the data. They search for evidence of ~~Component~~component failures or setting problems hidden behind an operation whose overall outcome seems to be correct. The relay data may be augmented with independently captured Digital Fault Recorder (DFR) data retrieved for the same event.

Fault data analysis comprises a legitimate CBM program that is capable of reducing the need for a manual time-interval based check on Protection Systems whose operations are analyzed. Even electromechanical Protection Systems instrumented with DFR channels may achieve some CBM benefit. The completeness of the verification then depends on the number and variety of Faults in the vicinity of the relay that produce relay response records and the specific data captured.

A typical Fault record will verify particular parts of certain Protection Systems in the vicinity of the Fault. For a given Protection System installation, it may or may not be possible to gather within a reasonable amount of time an ensemble of internal and external Fault records that completely verify the Protection System.

For example, Fault records may verify that the particular relays that tripped are able to trip via the control circuit path that was specifically used to clear that Fault. A relay or DFR record may indicate correct operation of the protection communications channel. Furthermore, other nearby Protection Systems may verify that they restrain from tripping for a Fault just outside their respective zones of protection. The ensemble of internal Fault and nearby external Fault event data can verify major portions of the Protection System, and reset the time clock for the Table 1 testing intervals for the verified ~~Component~~components only.

What can be shown from the records of one operation is very specific and limited. In a panel with multiple relays, only the specific relay(s) whose operation can be observed without ambiguity should be used. Be careful about using Fault response data to verify that settings or calibration are correct. Unless records have been captured for multiple Faults close to either side of a setting boundary, setting or calibration could still be incorrect.

PMU data, much like DME data, can be utilized to prove various ~~Component~~components of the Protection System. Obviously, care must be taken to attribute proof only to the parts of a Protection System that can actually be proven using the PMU or DME data.

If Fault record data is used to show that portions or all of a Protection System have been verified to meet Table 1 requirements, the owner must retain the Fault records used, and the maintenance-related conclusions drawn from this data and used to defer Table 1 tests, for at least the retention time interval given in Section 8.2.

11.1 Frequently Asked Questions:

I use my protective relays for Fault and Disturbance recording, collecting oscillographic records and event records via communications for Fault analysis to meet NERC and DME requirements. What are the maintenance requirements for the relays?

For relays used only as Disturbance Monitoring Equipment, NERC Standard PRC-018-1 R3 & R6 states the maintenance requirements and is being addressed by a standards activity that is revising PRC-002-1 and PRC-018-1. For protective relays "that are designed to provide protection for the BES," this standard applies, even if they also perform DME functions.

12. Importance of Relay Settings in Maintenance Programs

In manual testing programs, many utilities depend on pickup value or zone boundary tests to show that the relays have correct settings and calibration. Microprocessor relays, by contrast, provide the means for continuously monitoring measurement accuracy. Furthermore, the relay digitizes inputs from one set of signals to perform all measurement functions in a single self-monitoring microprocessor system. These relays do not require testing or calibration of each setting.

However, incorrect settings may be a bigger risk with microprocessor relays than with older relays. Some microprocessor relays have hundreds or thousands of settings, many of which are critical to Protection System performance.

Monitoring does not check measuring ~~E~~element settings. Analysis of Fault records may or may not reveal setting problems. To minimize risk of setting errors after commissioning, the user should enforce strict settings data base management, with reconfirmation (manual or automatic) that the installed settings are correct whenever maintenance activity might have changed them; for background and guidance, see [5] in References.

Table 1 requires that settings must be verified to be as specified. The reason for this requirement is simple: With legacy relays (non-microprocessor protective relays), it is necessary to know the value of the intended setting in order to test, adjust and calibrate the relay. Proving that the relay works per specified setting was the de facto procedure. However, with the advanced microprocessor relays, it is possible to change relay settings for the purpose of verifying specific functions and then neglect to return the settings to the specified values. While there is no specific requirement to maintain a settings management process, there remains a need to verify that the settings left in the relay are the intended, specified settings. This need may manifest itself after any of the following:

- One or more settings are changed for any reason.
- A relay fails and is repaired or replaced with another unit.
- A relay is upgraded with a new firmware version.

12.1 Frequently Asked Questions:

How do I approach testing when I have to upgrade firmware of a microprocessor relay?

The entity should ensure that the relay continues to function properly after implementation of firmware changes. Some entities may have a R&D department that might routinely run acceptance tests on devices with firmware upgrades before allowing the upgrade to be installed. Other entities may rely upon the vigorous testing of the firmware OEM. An entity has the latitude to install devices and/or programming that they believe will perform to their satisfaction. If an entity should choose to perform the maintenance activities specified in the Tables following a firmware upgrade, then they may, if they choose, reset the time clock on that set of maintenance activities so that they would not have to repeat the maintenance on its

regularly scheduled cycle. (However, for simplicity in maintenance schedules, some entities may choose to not reset this time clock; it is merely a suggested option.)

If I upgrade my old relays, then do I have to maintain my previous equipment maintenance documentation?

If an equipment item is repaired or replaced, then the entity can restart the maintenance-activity-time-interval-clock, if desired; however, the replacement of equipment does not remove any documentation requirements. The requirements in the standard are intended to ensure that an entity has a maintenance plan, and that the entity adheres to minimum activities and maximum time intervals. The documentation requirements are intended to help an entity demonstrate compliance. For example, saving the dates and records of the last two maintenance activities is intended to demonstrate compliance with the interval. Therefore, if you upgrade or replace equipment, then you still must maintain the documentation for the previous equipment, thus demonstrating compliance with the time interval requirement prior to the replacement action.

We have a number of installations where we have changed our Protection System ~~Component~~component~~s~~. Some of the changes were upgrades, but others were simply system rating changes that merely required taking relays "out-of-service". What are our responsibilities when it comes to "out-of-service" devices?

Assuming that your system up-rates, upgrades and overall changes meet any and all other requirements and standards, then the requirements of PRC-005-2 are simple – if the Protection System ~~Component~~component performs a Protection System function, then it must be maintained. If the ~~Component~~component no longer performs Protection System functions, then it does not require maintenance activities under the Tables of PRC-005-2. While many entities might physically remove a ~~Component~~component that is no longer needed, there is no requirement in PRC-005-2 to remove such ~~Component~~component(s). Obviously, prudence would dictate that an "out-of-service" device is truly made inactive. There are no record requirements listed in PRC-005-2 for Protection System ~~Component~~components not used.

While performing relay testing of a protective device on our Bulk Electric System, it was discovered that the protective device being tested was either broken or out of calibration. Does this satisfy the relay testing requirement, even though the protective device tested bad, and may be unable to be placed back into service?

Yes, PRC-005-2 requires entities to perform relay testing on protective devices on a given maintenance cycle interval. By performing this testing, the entity has satisfied PRC-005-2 requirement, although the protective device may be unable to be returned to service under normal calibration adjustments. R5 states:

"R5. Each Transmission Owner, Generator Owner, and Distribution Provider shall demonstrate efforts to correct any identified Unresolved Maintenance Issues."

Also, when a failure occurs in a Protection System, power system security may be comprised, and notification of the failure must be conducted in accordance with relevant NERC standards.

If I show the protective device out of service while it is being repaired, then can I add it back as a new protective device when it returns? If not, my relay testing history would show that I was out of compliance for the last maintenance cycle.

The maintenance and testing requirements (R5) state "…shall demonstrate efforts to correct any identified Unresolved Maintenance Issues..." The type of corrective activity is not stated; however, it could include repairs or replacements.

Your documentation requirements will increase, of course, to demonstrate that your device tested bad and had corrective actions initiated. Your regional entity might ask about the status of your corrective actions.

13. Self-Monitoring Capabilities and Limitations

Microprocessor relay proponents have cited the self-monitoring capabilities of these products for nearly 20 years. Theoretically, any element that is monitored does not need a periodic manual test. A problem today is that the community of manufacturers and users has not created clear documentation of exactly what is and is not monitored. Some unmonitored but critical elements are buried in installed s~~S~~ystems that are described as self-monitoring.

To utilize the extended time intervals allowed by monitoring, the user must document that the monitoring attributes of the device match the minimum requirements listed in the Table 1.

Until users are able to document how all parts of a system which are required for the protective functions are monitored or verified (with help from manufacturers), they must continue with the unmonitored intervals established in Table 1 and Table 3.

Going forward, manufacturers and users can develop mappings of the monitoring within relays, and monitoring coverage by the relay of user circuits connected to the relay terminals.

To enable the use of the most extensive monitoring (and never again have a hands-on maintenance requirement), the manufacturers of the microprocessor-based self-monitoring ~~Component~~components in the Protection System should publish for the user a document or map that shows:

- How all internal e~~E~~lements of the product are monitored for any failure that could impact Protection System performance.
- Which connected circuits are monitored by checks implemented within the product; how to connect and set the product to assure monitoring of these connected circuits; and what circuits or potential problems are not monitored.

~~With this information in hand, the user can document monitoring for some or all sections by~~This manufacturer's information can be used by the registered entity to document compliance of the monitoring attributes requirements by:

- Presenting or referencing the product manufacturer's documents.
- Explaining in a system design document the mapping of how every ~~Component~~component and circuit that is critical to protection is monitored by the microprocessor product(s) or by other design features.
- Extending the monitoring to include the alarm transmission ~~f~~Facilities through which failures are reported within a given time frame to allocate where action can be taken to initiate resolution of the alarm attributed to an Unresolved Maintenance Issue, so that failures of monitoring or alarming s~~S~~ystems also lead to alarms and action.
- Documenting the plans for verification of any unmonitored ~~Component~~components according to the requirements of Table 1 and Table 3.

13.1 Frequently Asked Questions:

I can't figure out how to demonstrate compliance with the requirements for the highest level of monitoring of Protection Systems. Why does this Maintenance Standard describe a maintenance program approach I cannot achieve?

Demonstrating compliance with the requirements for the highest level of monitoring any particular ~~Component~~component of Protection Systems is likely to be very involved, and may include detailed manufacturer documentation of complete internal monitoring within a device, comprehensive design drawing reviews, and other detailed documentation. This standard does not presume to specify what documentation must be developed; only that it must be documented.

There may actually be some equipment available that is capable of meeting these highest levels of monitoring criteria, in which case it may be maintained according to the highest level of monitoring shown on the Tables. However, even if there is no equipment available today that can meet this level of monitoring, the standard establishes the necessary requirements for when such equipment becomes available.

By creating a roadmap for development, this provision makes the standard technology-neutral. The Standard Drafting Team wants to avoid the need to revise the standard in a few years to accommodate technology advances that may be coming to the industry.

14. Notification of Protection System Failures

When a failure occurs in a Protection System, power system security may be compromised, and notification of the failure must be conducted in accordance with relevant NERC standard(s). Knowledge of the failure may impact the system operator's decisions on acceptable Loading conditions.

This formal reporting of the failure and repair status to the system operator by the Protection System owner also encourages the system owner to execute repairs as rapidly as possible. In some cases, a microprocessor relay or carrier set can be replaced in hours; wiring termination failures may be repaired in a similar time frame. On the other hand, a ~~Component~~component in an electromechanical or early-generation electronic relay may be difficult to find and may hold up repair for weeks. In some situations, the owner may have to resort to a temporary protection panel, or complete panel replacement.

15. Maintenance Activities

Some specific maintenance activities are a requirement to ensure reliability. An example would be that a BES entity could be prudent in its protective relay maintenance, but if its battery maintenance program is lacking, then reliability could still suffer. The NERC glossary outlines a Protection System as containing specific ~~Component~~component~~s~~. PRC-005-2 requires specific maintenance activities be accomplished within a specific time interval. As noted previously, higher technology equipment can contain integral monitoring capability that actually performs maintenance verification activities routinely and often; therefore, *manual intervention* to perform certain activities on these type ~~Component~~component~~s~~ may not be needed.

15.1 Protective Relays (Table 1-1)

These relays are defined as the devices that receive the input signal from the current and voltage sensing devices and are used to isolate a Faulted E~~e~~lement of the BES. Devices that sense thermal, vibration, seismic, pressure, gas, or any other non-electrical inputs are excluded.

Non-microprocessor based equipment is treated differently than microprocessor-based equipment in the following ways; the relays should meet the asset owners' tolerances:

- Non-microprocessor devices must be tested with voltage and/or current applied to the device.
- Microprocessor devices may be tested through the integral testing of the device.
    - There is no specific protective relay commissioning test or relay routine test mandated.
    - There is no specific documentation mandated.

15.1.1 Frequently Asked Questions:

What calibration tolerance should be applied on electromechanical relays?

Each entity establishes their own acceptable tolerances when applying protective relaying on their system. For some Protection System ~~Component~~component~~s~~, adjustment is required to bring measurement accuracy within the parameters established by the asset owner based on the specific application of the ~~Component~~component. A calibration failure is the result if testing finds the specified parameters to be out of tolerance.

15.2 Voltage & Current Sensing Devices (Table 1-3)

These are the current and voltage sensing devices, usually known as instrument transformers. There is presently a technology available (fiber-optic Hall-effect) that does not utilize conventional transformer technology; these devices and other technologies that produce quantities that represent the primary values of voltage and current are considered to be a type of voltage and current sensing devices included in this standard.

The intent of the maintenance activity is to verify the input to the protective relay from the device that produces the current or voltage signal sample.

There is no specific test mandated for these ~~Component~~component~~s~~. The important thing about these signals is to know that the expected output from these ~~Component~~component~~s~~

actually reaches the protective relay. Therefore, the proof of the proper operation of these ~~Component~~component~~s~~ also demonstrates the integrity of the wiring (or other medium used to convey the signal) from the current and voltage sensing device, all the way to the protective relay. The following observations apply:

- There is no specific ratio test, routine test or commissioning test mandated.
- There is no specific documentation mandated.
- It is required that the signal be present at the relay.
- This expectation can be arrived at from any of a number of means; including, but not limited to, the following: By calculation, by comparison to other circuits, by commissioning tests, by thorough inspection, or by any means needed to verify the circuit meets the asset owner's Protection System maintenance program.
- An example of testing might be a saturation test of a CT with the test values applied at the relay panel; this, therefore, tests the CT, as well as the wiring from the relay all the back to the CT.
- Another possible test is to measure the signal from the voltage and/or current sensing devices, during Load conditions, at the input to the relay.
- Another example of testing the various voltage and/or current sensing devices is to query the microprocessor relay for the Real-time Loading; this can then be compared to other devices to verify the quantities applied to this relay. Since the input devices have supplied the proper values to the protective relay, then the verification activity has been satisfied. Thus, event reports (and oscillographs) can be used to verify that the voltage and current sensing devices are performing satisfactorily.
- Still another method is to measure total watts and vars around the entire bus; this should add up to zero watts and zero vars, thus proving the voltage and/or current sensing devices system throughout the bus.
- Another method for proving the voltage and/or current-sensing devices is to complete commissioning tests on all of the transformers, cabling, fuses and wiring.
- Any other method that verifies the input to the protective relay from the device that produces the current or voltage signal sample.

15.2.1 Frequently Asked Questions:

What is meant by "…verify the current and voltage circuit inputs from the voltage and current sensing devices to the protective relays …" Do we need to perform ratio, polarity and saturation tests every few years?

No. You must verify that the protective relay is receiving the expected values from the voltage and current-sensing devices (typically voltage and current transformers). This can be as difficult as is proposed by the question (with additional testing on the cabling and substation wiring to ensure that the values arrive at the relays); or simplicity can be achieved by other verification methods. While some examples follow, these are not intended to represent an all-inclusive list; technology advances and ingenuity should not be excluded from making comparisons and verifications:

- Compare the secondary values, at the relay, to a metering circuit, fed by different current transformers, monitoring the same line as the questioned relay circuit.
- Compare the individual phase secondary values at the relay panel (with additional testing on the panel wiring to ensure that the values arrive at those relays) with the other phases, and verify that residual currents are within expected bounds.
- Observe all three phase currents and the residual current at the relay panel with an oscilloscope, observing comparable magnitudes and proper phase relationship, with additional testing on the panel wiring to ensure that the values arrive at the relays.
- Compare the values, as determined by the questioned relay (such as, but not limited to, a query to the microprocessor relay) to another protective relay monitoring the same line, with currents supplied by different CTs.
- Compare the secondary values, at the relay with values measured by test instruments (such as, but not limited to multi-meters, voltmeter, clamp-on ammeters, etc.) and verified by calculations and known ratios to be the values expected. For example, a single PT on a 100KV bus will have a specific secondary value that, when multiplied by the PT ratio, arrives at the expected bus value of 100KV.
- Query SCADA for the power flows at the far end of the line protected by the questioned relay, compare those SCADA values to the values as determined by the questioned relay.
- Totalize the Watts and VARs on the bus and compare the totals to the values as seen by the questioned relay.

The point of the verification procedure is to ensure that all of the individual ~~Component~~components are functioning properly; and that an ongoing proactive procedure is in place to re-check the various ~~Component~~components of the protective relay measuring Systems.

Is wiring insulation or hi-pot testing required by this Maintenance Standard?

No, wiring insulation and equipment hi-pot testing are not specifically required by the Maintenance Standard. However, if the method of verifying CT and PT inputs to the relay involves some other method than actual observation of current and voltage transformer secondary inputs to the relay, it might be necessary to perform some sort of cable integrity test

to verify that the instrument transformer secondary signals are actually making it to the relay and not being shunted off to ground. For instance, you could use CT excitation tests and PT turns ratio tests and compare to baseline values to verify that the instrument transformer outputs are acceptable. However, to conclude that these acceptable transformer instrument output signals are actually making it to the relay inputs, it also would be necessary to verify the insulation of the wiring between the instrument transformer and the relay.

My plant generator and transformer relays are electromechanical and do not have metering functions, as do microprocessor- based relays. In order for me to compare the instrument transformer inputs to these relays to the secondary values of other metered instrument transformers monitoring the same primary voltage and current signals, it would be necessary to temporarily connect test equipment, like voltmeters and clamp on ammeters, to measure the input signals to the relays. This practice seems very risky, and a plant trip could result if the technician were to make an error while measuring these current and voltage signals. How can I avoid this risk? Also, what if no other instrument transformers are available which monitor the same primary voltage or current signal?

Comparing the input signals to the relays to the outputs of other independent instrument transformers monitoring the same primary current or voltage is just one method of verifying the instrument transformer inputs to the relays, but is not required by the standard. Plants can choose how to best manage their risk. If online testing is deemed too risky, offline tests, such as, but not limited to, CT excitation test and PT turns ratio tests can be compared to baseline data and be used in conjunction with CT and PT secondary wiring insulation verification tests to adequately "verify the current and voltage circuit inputs from the voltage and current sensing devices to the protective relays …" while eliminating the risk of tripping an in service generator or transformer. Similarly, this same offline test methodology can be used to verify the relay input voltage and current signals to relays when there are no other instrument transformers monitoring available for purposes of signal comparison.

15.3 Control circuitry associated with protective functions (Table 1-5)

This ~~Component~~component of Protection Systems includes the trip coil(s) of the circuit breaker, circuit switcher or any other interrupting device. It includes the wiring from the batteries to the relays. It includes the wiring (or other signal conveyance) from every trip output to every trip coil. It includes any device needed for the correct processing of the needed trip signal to the trip coil of the interrupting device; this requirement is meant to capture inputs and outputs to and from a protective relay that are necessary for the correct operation of the protective functions. In short, every trip path must be verified; the method of verification is optional to the asset owner. An example of testing methods to accomplish this might be to verify, with a volt-meter, the existence of the proper voltage at the open contacts, the open circuited input circuit and at the trip coil(s). As every parallel trip path has similar failure modes, each trip path from relay to trip coil must be verified. Each trip coil must be tested to trip the circuit breaker (or other interrupting device) at least once. There is a requirement to operate the circuit breaker (or other interrupting device) at least once every six years as part of the complete functional test. If a suitable monitoring system is installed that verifies every parallel trip path, then the manual-intervention testing of those parallel trip paths can be eliminated; however, the actual operation of the circuit breaker must still occur at least once every six years. This six-year tripping requirement can be completed as easily as tracking the Real-time Fault-clearing

operations on the circuit breaker, or tracking the trip coil(s) operation(s) during circuit breaker routine maintenance actions.

The circuit-interrupting device should not be confused with a motor-operated disconnect. The intent of this standard is to require maintenance intervals and activities on Protection Systems equipment, and not just all system isolating equipment.

It is necessary, however, to classify a device that actuates a high-speed auto-closing ground switch as an interrupting device, if this ground switch is utilized in a Protection System and forces a ground Fault to occur that then results in an expected Protection System operation to clear the forced ground Fault. The SDT believes that this is essentially a transferred-tripping device without the use of communications equipment. If this high-speed ground switch is "…designed to provide protection for the BES…" then this device needs to be treated as any other Protection System ~~Component~~component. The control circuitry would have to be tested within 12 years, and any electromechanically operated device will have to be tested every six years. If the spring-operated ground switch can be disconnected from the solenoid triggering unit, then the solenoid triggering unit can easily be tested without the actual closing of the ground blade.

The dc control circuitry also includes each auxiliary tripping relay (94) and each lock-out relay (86) that may exist in any particular trip scheme. If the lock-out relays (86) are electromechanical type ~~Component~~components, then they must be trip tested. The PSMT SDT considers these ~~Component~~components to share some similarities in failure modes as electromechanical protective relays; as such, there is a six-year maximum interval between mandated maintenance tasks unless PBM is applied.

Contacts of the 86 and/or 94 that pass the trip current on to the circuit interrupting device trip coils will have to be checked as part of the 12 year requirement. Contacts of the 86 and/or 94 lock relay that operate non-BES interrupting devices are not required. Normally-open contacts that are not used to pass a trip signal and normally-closed contacts do not have to be verified. Verification of the tripping paths is the requirement.

While relays that do not respond to electrical quantities are presently excluded from this standard, their control circuits are included if the relay is installed to detect Faults on BES Elements. Thus, the control circuit of a BES transformer sudden pressure relay should be verified every 12 years, assuming its integrity is not monitored. While a sudden pressure relay control circuit is included within the scope of PRC-005-2, other alarming relay control circuits, (i.e., SF-6 low gas) are not included, even though they may trip the breaker being monitored.

New technology is also accommodated here; there are some tripping s~~S~~ystems that have replaced the traditional hard-wired trip circuitry with other methods of trip-signal conveyance such as fiber-optics. It is the intent of the PSMT SDT to include this, and any other, technology that is used to convey a trip signal from a protective relay to a circuit breaker (or other interrupting device) within this category of equipment. The requirement for these s~~S~~ystems is verification of the tripping path.

Monitoring of the control circuit integrity allows for no maintenance activity on the control circuit (excluding the requirement to operate trip coils and electromechanical lockout and/or tripping auxiliary relays). Monitoring of integrity means to monitor for continuity and/or

presence of voltage on each trip path. For Ethernet or fiber-optic control ~~S~~systems, monitoring of integrity means to monitor communication ability between the relay and the circuit breaker.

The trip path from a sudden pressure device is a part of the Protection System control circuitry. The sensing element is omitted from PRC-005-2 testing requirements because the SDT is unaware of industry-recognized testing protocol for the sensing elements. The SDT believes that Protection Systems that trip (or can trip) the BES should be included. This position is consistent with the currently-approved PRC-005-1, consistent with the SAR for Project 2007-17, and understands this to be consistent with the position of FERC staff.

15.3.1 Frequently Asked Questions:

Is it permissible to verify circuit breaker tripping at a different time (and interval) than when we verify the protective relays and the instrument transformers?

Yes, provided the entire Protective System is tested within the individual ~~Component~~component's maximum allowable testing intervals.

The Protection System Maintenance Standard describes requirements for verifying the tripping of circuit breakers. What is this telling me about maintenance of circuit breakers?

Requirements in PRC-005-2 are intended to verify the integrity of tripping circuits, including the breaker trip coil, as well as the presence of auxiliary supply (usually a battery) for energizing the trip coil if a protection function operates. Beyond this, PRC-005-2 sets no requirements for verifying circuit breaker performance, or for maintenance of the circuit breaker.

How do I test each dc Control Circuit trip path, as established in Table 1-5 "Protection System Control Circuitry (Trip coils and auxiliary relays)"?

Table 1-5 specifies that each breaker trip coil and lockout relays that carry trip current to a trip coil must be operated within the specified time period. The required operations may be via targeted maintenance activities, or by documented operation of these devices for other purposes such as Fault clearing.

Are high-speed ground switch trip coils included in the dc control circuitry?

Yes. PRC-005-2 includes high-speed grounding switch trip coils within the dc control circuitry to the degree that the initiating Protection Systems are characterized as "transmission Protection Systems."

Does the control circuitry and trip coil of a non-BES breaker, tripped via a BES protection ~~Component~~component, have to be tested per Table 1.5? (Refer to Table 3 for examples 1 and 2)

~~An e~~Example 1: ~~of an otherwise~~A non-BES circuit breaker that is tripped via a ~~BES protection Component~~Protection System to which PRC-005-2 applies might be (but is not limited to) a 12.5KV circuit breaker feeding (non-black-start) radial Loads but has a trip that originates from an under-frequency (81) relay.

- The relay must be verified.
- The voltage signal to the relay must be verified.
- All of the relevant dc supply tests still apply.
- All of the relevant communication system tests still apply.

- The unmonitored trip circuit between the relay and any lock-out or auxiliary relay must be verified every 12 years.
- The unmonitored trip circuit between the lock-out (or auxiliary relay) and the non-BES breaker does not have to be proven with an electrical trip.
- In the case where there is no lock-out or auxiliary tripping relay used, the trip circuit to the non-BES breaker does not have to be proven with an electrical trip.
- The trip coil of the non-BES circuit breaker does not have to be individually proven with an electrical trip.

Example 2: A Transmission Owner may have a non-BES breaker that is tripped via a Protection System to which PRC-005-2 applies, which may be (but is not limited to) a 13.8 KV circuit breaker feeding (non-black-start) radial Loads but has a trip that originates from a BES 115KV line relay.

- The relay must be verified
- The voltage signal to the relay must be verified
- All of the relevant dc supply tests still apply
- All of the relevant communication system tests still apply
- The unmonitored trip circuit between the relay and any lock-out (86) or auxiliary (94) relay must be verified every 12 years
- The unmonitored trip circuit between the lock-out (86) (or auxiliary (94)) relay and the non-BES breaker does not have to be proven with an electrical trip
- In the case where there is no lockout (86) or auxiliary (94) tripping relay used, the trip circuit to the non-BES breaker does not have to be proven with an electrical trip.
- The trip coil of the non-BES circuit breaker does not have to be individually proven with an electrical trip

Example 3: A Generator Owner may have an non-BES circuit breaker that is tripped via a Protection System to which PRC-005-2 applies, such as the generator field breaker and low-side breakers on station service/excitation transformers connected to the generator bus.

Trip testing of the generator field breaker and low side station service/excitation transformer breaker(s) via lockout or auxiliary tripping relays are not required since these breakers may be associated with radially fed loads and are not considered to be BES breakers. An example of an otherwise non-BES circuit breaker that is tripped via a BES protection component might be (but is not limited to) a 6.9kV station service transformer source circuit breaker but has a trip that originates from a generator differential (87) relay.

- The differential relay must be verified.
- The current signals to the relay must be verified.
- All of the relevant dc supply tests still apply.
- The unmonitored trip circuit between the relay and any lock-out or auxiliary relay must be verified every 12 years.
- The unmonitored trip circuit between the lock-out (or auxiliary relay) and the non-BES breaker does not have to be proven with an electrical trip.

- In the case where there is no lock-out or auxiliary tripping relay used, the trip circuit to the non-BES breaker does not have to be proven with an electrical trip.
- The trip coil of the non-BES circuit breaker does not have to be individually proven with an electrical trip.

However, it is very prudent to verify the tripping of such reakers for the integrity of the overall generation plant.

Do I have to verify operation of breaker "a" contacts or any other normally closed auxiliary contacts in the trip path of each breaker as part of my control circuit test?

Operation of normally-closed contacts does not have to be verified. Verification of the tripping paths is the requirement. The continuity of the normally closed contacts will be verified when the tripping path is verified.

15.4 Batteries and DC Supplies (Table 1-4)

The NERC definition of a Protection System is:

- Protective relays which respond to electrical quantities,
- Communications Systems necessary for correct operation of protective functions,
- Voltage and current sensing devices providing inputs to protective relays,
- Station dc supply associated with protective functions (including station batteries, battery chargers, and non-battery-based dc supply), and
- Control circuitry associated with protective functions through the trip coil(s) of the circuit breakers or other interrupting devices.

The station battery is not the only ~~Component~~component that provides dc power to a Protection System. In the new definition for Protection System, "station batteries" are replaced with "station dc supply" to make the battery charger and dc producing stored energy devices (that are not a battery) part of the Protection System that must be maintained.

The PSMT SDT recognizes that there are several technological advances in equipment and testing procedures that allow the owner to choose how to verify that a battery string is free of open circuits. The term "continuity" was introduced into the standard to allow the owner to choose how to verify continuity of a battery set by various methods, and not to limit the owner to other conventional methods of showing continuity. Continuity, as used in Table 1-4 of the standard, refers to verifying that there is a continuous current path from the positive terminal of the station battery set to the negative terminal. Without verifying continuity of a station battery, there is no way to determine that the station battery is available to supply dc power to the station. An open battery string will be an unavailable power source in the event of loss of the battery charger.

Batteries cannot be a unique population segment of a Performance-Based Maintenance Program (PBM) because there are too many variables in the electrochemical process to completely isolate all of the performance-changing criteria necessary for using PBM on battery Systems. However, nothing precludes the use of a PBM process for any other part of a dc supply besides the batteries themselves.

15.4.1 Frequently Asked Questions:

What constitutes the station dc supply, as mentioned in the definition of Protective System?

The previous definition of Protection System includes batteries, but leaves out chargers. The latest definition includes chargers, as well as dc s~~S~~ystems that do not utilize batteries. This revision of PRC-005-2 is intended to capture these devices that were not included under the previous definition. The station direct current (dc) supply normally consists of two ~~Component~~components: the battery charger and the station battery itself. There are also emerging technologies that provide a source of dc supply that does not include either a battery or charger.

Battery Charger - The battery charger is supplied by an available ac source. At a minimum, the battery charger must be sized to charge the battery (after discharge) and supply the constant dc l~~L~~oad. In many cases, it may be sized also to provide sufficient dc current to handle the higher energy requirements of tripping breakers and switches when actuated by the protective relays in the Protection System.

Station Battery - Station batteries provide the dc power required for tripping and for supplying normal dc power to the station in the event of loss of the battery charger. There are several technologies of battery that require unique forms of maintenance as established in Table 1-4.

Emerging Technologies - Station dc supplies are currently being developed that use other energy storage technologies besides the station battery to prevent loss of the station dc supply when ac power is lost. Maintenance of these station dc supplies will require different kinds of tests and inspections. Table 1-4 presents maintenance activities and maximum allowable testing intervals for these new station dc supply technologies. However, because these technologies are relatively new, the maintenance activities for these station dc supplies may change over time.

What did the PSMT SDT mean by "continuity" of the dc supply?

The PSMT SDT recognizes that there are several technological advances in equipment and testing procedures that allow the owner to choose how to verify that a battery string is free of open circuits. The term "continuity" was introduced into the standard to allow the owner to choose how to verify continuity (no open circuits) of a battery set by various methods, and not to limit the owner to other conventional methods of showing continuity – lack of an open circuit. Continuity, as used in Table 1-4 of the standard, refers to verifying that there is a continuous current path from the positive terminal of the station battery set to the negative terminal (no open circuit). Without verifying continuity of a station battery, there is no way to determine that the station battery is available to supply dc power to the station. Whether it is caused from an open cell or a bad external connection, an open battery string will be an unavailable power source in the event of loss of the battery charger.

The current path through a station battery from its positive to its negative connection to the dc control circuits is composed of two types of elements. These path elements are the electrochemical path through each of its cells and all of the internal and external metallic connections and terminations of the batteries in the battery set. If there is loss of continuity (an open circuit) in any part of the electrochemical or metallic path, the battery set will not be available for service. In the event of the loss of the ac source or battery charger, the battery

must be capable of supplying dc current, both for continuous dc l~~L~~oads and for tripping breakers and switches. Without continuity, the battery cannot perform this function.

At generating stations and large transmission stations where battery chargers are capable of handling the maximum current required by the Protection System, there are still problems that could potentially occur when the continuity through the connected battery is interrupted.

- Many battery chargers produce harmonics which can cause failure of dc power supplies in microprocessor-based protective relays and other electronic devices connected to station dc supply. In these cases, the substation battery serves as a filter for these harmonics. With the loss of continuity in the battery, the filter provided by the battery is no longer present.
- Loss of electrical continuity of the station battery will cause, in most battery chargers, regardless of the battery charger's output current capability, a delayed response in full output current from the charger. Almost all chargers have an intentional one- to two-second delay to switch from a low substation dc l~~L~~oad current to the maximum output of the charger. This delay would cause the opening of circuit breakers to be delayed, which could violate system performance standards.

Monitoring of the station dc supply voltage will not indicate that there is a problem with the dc current path through the battery, unless the battery charger is taken out of service. At that time, a break in the continuity of the station battery current path will be revealed because there will be no voltage on the station dc circuitry. This particular test method, while proving battery continuity, may not be acceptable to all installations.

Although the standard prescribes what must be accomplished during the maintenance activity, it does not prescribe how the maintenance activity should be accomplished. There are several methods that can be used to verify the electrical continuity of the battery. These are not the only possible methods, simply a sampling of some methods:

- One method is to measure that there is current flowing through the battery itself by a simple clamp on milliamp-range ammeter. A battery is always either charging or discharging. Even when a battery is charged, there is still a measurable float charge current that can be detected to verify that there is continuity in the electrical path through the battery.
- A simple test for continuity is to remove the battery charger from service and verify that the battery provides voltage and current to the dc system. However, the behavior of the various dc-supplied equipment in the station should be considered before using this approach.
- Manufacturers of microprocessor-controlled battery chargers have developed methods for their equipment to periodically (or continuously) test for battery continuity. For example, one manufacturer periodically reduces the float voltage on the battery until current from the battery to the dc l~~L~~oad can be measured to confirm continuity.
- Applying test current (as in some ohmic testing devices, or devices for locating dc grounds) will provide a current that when measured elsewhere in the string, will prove that the circuit is continuous.

- Internal ohmic measurements of the cells and units of lead-acid batteries (VRLA & VLA) can detect lack of continuity within the cells of a battery string; and when used in conjunction with resistance measurements of the battery's external connections, can prove continuity. Also some methods of taking internal ohmic measurements, by their very nature, can prove the continuity of a battery string without having to use the results of resistance measurements of the external connections.
- Specific gravity tests can infer continuity because, without continuity, there could be no charging occurring; and if there is no charging, then specific gravity will go down below acceptable levels.

No matter how the electrical continuity of a battery set is verified, it is a necessary maintenance activity that must be performed at the intervals prescribed by Table 1-4 to insure that the station dc supply has a path that can provide the required current to the Protection System at all times.

When should I check the station batteries to see if they have sufficient energy to perform as manufactured?

The answer to this question depends on the type of battery (valve-regulated lead-acid, vented lead-acid, or nickel-cadmium) and the maintenance activity chosen.

For example, if you have a valve-regulated lead-acid (VRLA) station battery, and you have chosen to evaluate the measured cell/unit internal ohmic values to the battery cell's baseline, you will have to perform verification at a maximum maintenance interval of no greater than every six months. While this interval might seem to be quite short, keep in mind that the six-month interval is important for VRLA batteries; this interval provides an accumulation of data that better shows when a VRLA battery is incapable of performing as manufactured.

If, for a VRLA station battery, you choose to conduct a performance capacity test on the entire station battery as the maintenance activity, then you will have to perform verification at a maximum maintenance interval of no greater than every three calendar years.

How is a baseline established for cell/unit internal ohmic measurements?

Establishment of cell/unit internal ohmic baseline measurements should be completed when lead-acid batteries are newly installed. To ensure that the baseline ohmic cell/unit values are most indicative of the station battery's ability to perform as manufactured, they should be made at some point in time after the installation to allow the cell chemistry to stabilize after the initial freshening charge. An accepted industry practice for establishing baseline values is after six-months of installation, with the battery fully charged and in service. However, it is recommended that each owner, when establishing a baseline, should consult the battery manufacturer for specific instructions on establishing an ohmic baseline for their product, if available.

When internal ohmic measurements are taken, the same make/model~~type of~~~~consistent~~ test equipment should be used to establish the baseline and used for the future trending of the cells internal ohmic measurements because of variances in test equipment and the type of ohmic measurement used by different manufacturer's equipment. Keep in mind that one manufacturer's "Conductance" test equipment does not produce similar results as another manufacturer's "Conductance~~Impedance~~" test equipment, even though both manufacturers

have produced "Ohmic" test equipment. Therefore, for meaningful results to an established baseline, the same make/model ~~type (manufacture)~~ of instrument should ~~always~~ be used.

For all new installations of valve-regulated lead-acid (VRLA) batteries and vented lead-acid (VLA) batteries, where trending of the cells internal ohmic measurements to a baseline are to be used to determine the ability of the station battery to perform as manufactured, the establishment of the baseline, as described above, should be followed at the time of installation to insure the most accurate trending of the cell/unit. However, often for older VRLA batteries, the owners of the station batteries have not established a baseline at installation. Also for owners of VLA batteries who want to establish a maintenance activity which requires trending of measured ohmic values to a baseline, there was typically no baseline established at installation of the station battery to trend to.

To resolve the problem of the unavailability of baseline internal ohmic measurements for the individual cell/unit of a station battery, many manufacturers of internal ohmic measurement devices have established libraries of baseline values for VRLA and VLA batteries using their testing device. Also, several of the battery manufacturers have libraries of baselines for their products that can be used to trend to. However, it is important that when using battery manufacturer-supplied data that it is verified that the baseline readings to be used were taken with the same ohmic testing device that will be used for future measurements (for example "Conductance Readings" from one manufacturer's test equipment do not correlate to "Impedance Readings" from a different manufacturer's test equipment). Although many manufacturers may have provided baseline values, which will allow trending of the internal ohmic measurements over the remaining life of a station battery, these baselines are not the actual cell/unit measurements for the battery being trended. It is important to have a baseline tailored to the station battery to more accurately use the tool of ohmic measurement trending. That more customized baseline can only be created by following the establishment of a baseline for each cell/unit at the time of installation of the station battery.

Why determine the State of Charge?

Even though there is no present requirement to check the state of charge of a battery, it can be a very useful tool in determining the overall condition of a battery system. The following discussions are offered as a general reference.

When a battery is fully charged, the battery is available to deliver its existing capacity. As a battery is discharged, its ability to deliver its maximum available capacity is diminished. It is necessary to determine if the state of charge has dropped to an unacceptable level.

What is State of Charge and how can it be determined in a station battery?

The state of charge of a battery refers to the ratio of residual capacity at a given instant to the maximum capacity available from the battery. When a battery is fully charged, the battery is available to deliver its existing capacity. As a battery is discharged, its ability to deliver its maximum available capacity is diminished. Knowing the amount of energy left in a battery compared with the energy it had when it was fully charged gives the user an indication of how much longer a battery will continue to perform before it needs recharging.

For vented lead-acid (VLA) batteries which use accessible liquid electrolyte, a hydrometer can be used to test the specific gravity of each cell as a measure of its state of charge. The hydrometer depends on measuring changes in the weight of the active chemicals. As the battery discharges, the active electrolyte, sulfuric acid, is consumed and the concentration of

the sulfuric acid in water is reduced. This, in turn, reduces the specific gravity of the solution in direct proportion to the state of charge. The actual specific gravity of the electrolyte can, therefore, be used as an indication of the state of charge of the battery. Hydrometer readings may not tell the whole story, as it takes a while for the acid to get mixed up in the cells of a VLA battery. If measured right after charging, you might see high specific gravity readings at the top of the cell, even though it is much less at the bottom. Conversely, if taken shortly after adding water to the cell, the specific gravity readings near the top of the cell will be lower than those at the bottom.

Nickel-cadmium batteries, where the specific gravity of the electrolyte does not change during battery charge and discharge, and valve-regulated lead-acid (VRLA) batteries, where the electrolyte is not accessible, cannot have their state of charge determined by specific gravity readings. For these two types of batteries, and also for VLA batteries, where another method besides taking hydrometer readings is desired, the state of charge may be determined by using the battery charger and taking voltage and current readings during float and equalize (high-rate charge mode). This method is an effective means of determining when the state of charge is low and when it is approaching a fully-charged condition, which gives the assurance that the available battery capacity will be maximized.

Why determine the Connection Resistance?

High connection resistance can cause abnormal voltage drop or excessive heating during discharge of a station battery. During periods of a high rate of discharge of the station battery, a very high resistance can cause severe damage. The maintenance requirement to verify battery terminal connection resistance in Table 1-4 is established to verify that the integrity of all battery electrical connections is acceptable. This verification includes cell-to-cell (intercell) and external circuit terminations. Your method of checking for acceptable values of intercell and terminal connection resistance could be by individual readings, or a combination of the two. There are test methods presently that can read post termination resistances and resistance values between external posts. There are also test methods presently available that take a combination reading of the post termination connection resistance plus the intercell resistance value plus the post termination connection resistance value. Either of the two methods, or any other method, that can show if the adequacy of connections at the battery posts is acceptable.

Adequacy of the electrical terminations can be determined by comparing resistance measurements for all connections taken at the time of station battery's installation to the same resistance measurements taken at the maintenance interval chosen, not to exceed the maximum maintenance interval of Table 1-4. Trending of the interval measurements to the baseline measurements will identify any degradation in the battery connections. When the connection resistance values exceed the acceptance criteria for the connection, the connection is typically disassembled, cleaned, reassembled and measurements taken to verify that the measurements are adequate when compared to the baseline readings.

What conditions should be inspected for visible battery cells?

The maintenance requirement to inspect the cell condition of all station battery cells where the cells are visible is a maintenance requirement of Table 1-4. Station batteries are different from any other ~~Component~~component in the Protection Station because they are a perishable product due to the electrochemical process which is used to produce dc electrical current and voltage. This inspection is a detailed visual inspection of the cells for abnormalities that occur

in the aging process of the cell. In VLA battery visual inspections, some of the things that the inspector is typically looking for on the plates are signs of sulfation of the plates, abnormal colors (which are an indicator of sulfation or possible copper contamination) and abnormal conditions such as cracked grids. The visual inspection could look for symptoms of hydration that would indicate that the battery has been left in a completely discharged state for a prolonged period. Besides looking at the plates for signs of aging, all internal connections, such as the bus bar connection to each plate, and the connections to all posts of the battery need to be visually inspected for abnormalities. In a complete visual inspection for the condition of the cell the cell plates, separators and sediment space of each cell must be looked at for signs of deterioration. An inspection of the station battery's cell condition also includes looking at all terminal posts and cell-to-cell electric connections to ensure they are corrosion free. The case of the battery containing the cell, or cells, must be inspected for cracks and electrolyte leaks through cracks and the post seals.

This maintenance activity cannot be extended beyond the maximum maintenance interval of Table 1-4 by a Performance-Based Maintenance Program (PBM) because of the electrochemical aging process of the station battery, nor can there be any monitoring associated with it because there must be a visual inspection involved in the activity. A remote visual inspection could possibly be done, but its interval must be no greater than the maximum maintenance interval of Table 1-4.

Why is it necessary to verify the battery string can perform as manufactured? I only care that the battery can trip the breaker, which means that the battery can perform as designed. I oversize my batteries so that even if the battery cannot perform as manufactured, it can still trip my breakers.

The fundamental answer to this question revolves around the concept of battery performance "as designed" vs. battery performance "as manufactured." The purpose of the various sections of Table 1-4 of this standard is to establish requirements for the Protection System owner to maintain the batteries, to ensure they will operate the equipment when there is an incident that requires dc power, and ensure the batteries will continue to provide adequate service until at least the next maintenance interval. To meet these goals, the correct battery has to be properly selected to meet the design parameters, and the battery has to deliver the power it was manufactured to provide.

When testing batteries, it may be difficult to determine the original design (i.e., ~~L~~load profile) of the dc system. This standard is not intended as a design document, and requirements relating to design are, therefore, not included.

Where the dc load profile is known, the best way to determine if the system will operate as designed is to conduct a service test on the battery. However, a service test alone might not fully determine if the battery is healthy. A battery with 50% ~~percent~~ capacity may be able to pass a service test, but the battery would be in a serious state of deterioration and could fail at some point in the near future.

To ensure that the battery will meet the required ~~L~~load profile and continue to meet the ~~L~~load profile until the next maintenance interval, the installed battery must be sized correctly (i.e., a correct design), and it must be in a good state of health. Since the design of the dc system is not within the scope of the standard, the only consistent and reliable method to ensure that the battery is in a good state of health is to confirm that it can perform as manufactured. If the

battery can perform as manufactured and it has been designed properly, the system should operate properly until the next maintenance interval.

How do I verify the battery string can perform as manufactured?

Optimally, actual battery performance should be verified against the manufacturer's rating curves. The best practice for evaluating battery performance is via a performance test. However, due to both logistical and system reliability concerns, some Protection System owners prefer other methods to determine if a battery can perform as manufactured. There are several battery parameters that can be evaluated to determine if a battery can perform as manufactured. Ohmic measurements and float current are two examples of parameters that have been reported to assist in determining if a battery string can perform as manufactured.

The evaluation of battery parameters in determining battery health is a complex issue, and is not an exact science. This standard gives the user an opportunity to utilize other measured parameters to determine if the battery can perform as manufactured. It is the responsibility of the Protection System owner, however, to maintain a documented process that demonstrates the chosen parameter(s) and associated methodology used to determine if the battery string can perform as manufactured.

Whatever~~Whichever~~ parameters are used to evaluate the battery ~~is evaluated~~ (ohmic measurements, float current, float voltages, temperature, specific gravity, performance test, or combination thereof~~etc.~~), the goal is to determine the value of the measurement (or the percentage change) at which the battery fails to perform as manufactured, or the point where the battery is deteriorating so rapidly that it will not perform as manufactured before the next maintenance interval.

This necessitates the need for establishing and documenting a baseline. A baseline may be required of every individual cell, a particular battery installation, or a specific make, model, or size of a cell. Given a consistent cell manufacturing process, it may be possible to establish a baseline number for the cell (make/model/type) and, therefore, a subsequent baseline for every installation would not be necessary. However, future installations of the same battery types should be spot-checked to ensure that your baseline remains applicable.

~~Consistency is the key when measuring and evaluating ohmic readings. Consistent testing methods by trained personnel are essential. Moreover, it is absolutely critical that personnel use the same make/model of test instrument every time readings are taken if the values are going to be compared. The type of probe, the location of the reading (post, connector, etc.) and the room temperature during the test needs to be carefully recorded when the readings are taken. For every subsequent time the readings are taken, the same make/model of the test instrument must be used, the same type of probes must be used, and the location of the reading must be the same.Care should be taken to consider factors that might lead a trending program astray.[[[SAM LEAVES THIS IN AS BEFORE]]]~~

Consistent testing methods by trained personnel are essential. Moreover, it is essential that these technicians utilize the same make/model of ohmic test equipment each time readings are taken in order to establish a meaningful and accurate trend line against the established baseline. The type of probe and its location (post, connector, etc) for the reading need to be the same for each subsequent test. The room temperature should be recorded with the readings

for each test as well. Care should be taken to consider any factors that might lead a trending program to become invalid.

~~**Float current along with other measureable parameters can be used in lieu of or in concert with ohmic measurement testing to measure the ability of a battery to perform as manufactured. The key to using any of these measurements is to establish a trending line against baseline so that a documented process establishes the validity of the judgment used to determine that the battery may perform or not perform as manufactured.**~~

~~A detailed understanding of the characteristic of a battery is also necessary if attempting to use float current as a measure of the ability of a battery to perform as manufactured. For example, trending of float current is a very effective way to determine the rate of antimony poisoning; and, thus, track the positive plate aging process in high antimony lead acid batteries (batteries with greater than 10 percent antimony in their grid lead alloys). The increased float current with age in these high lead antimony batteries can increase the positive plate aging process which gives an excellent indication of battery aging. Trending and evaluation of the measurements of float current on these high antimony lead acid batteries is an acceptable maintenance activity of Tables 1-4(a) and 1-4(b) for verifying the station battery can perform as manufactured. However, lead-calcium acid batteries do not have this property of being able to determine the aging of their grids by trending their float current, because their float current is constant over the life of the battery. Also the lower lead antimony (antimony two percent or lower) batteries do not exhibit this increase in float current as their plate structures age. When attempting to establish a trending program for lead-calcium or low lead antimony (such as lead-selenium) batteries, the Protection System owner should contact the manufacturer of the station battery to see if a trending process is recommended for determining aging of these products.~~

Float current along with other measureable parameters can be used in lieu of or in concert with ohmic measurement testing to measure the ability of a battery to perform as manufactured. The key to using any of these measurement parameters is to establish a baseline and the point where the reading indicates that the battery will not perform as manufactured.

The establishment of a baseline may be different for various types of cells and for different types of installations. In some cases, it may be possible to obtain a baseline number from the battery manufacturer, although it is much more likely that the baseline will have to be established after the installation is complete. To some degree, the battery may still be "forming" after installation; consequently, determining a stable baseline may not be possible until several months after the battery has been in service.

The most important part of this process is to determine the point where the ohmic reading (or other measured parameter(s)) indicates that the battery cannot perform as manufactured. That point could be an absolute number, an absolute change, or a percentage change of an established baseline.

Since there are no universally-accepted repositories of this information, the Protection System owner will have to determine the value/percentage where the battery cannot perform as manufactured (heretofore referred to as a failed cell). This is the most difficult and important part of the entire process.

To determine the point where the battery fails to perform as manufactured, it is helpful to have a history of a battery type, if the data includes the parameter(s) used to evaluate the battery's

ability to perform as manufactured against the actual demonstrated performance/capacity of a battery/cell.

For example, when an ohmic reading has been recorded that the user suspects is indicating a failed cell, a performance test of that cell (or string) should be conducted in order to prove/quantify that the cell has failed. Through this process, the user needs to determine the ohmic value at which the performance of the cell has dropped below 80% ~~percent~~ of the manufactured, rated performance. It is likely that there may be a variation in ohmic readings that indicates a failed cell (possibly significant). It is prudent to use the most conservative values to determine the point at which the cell should be marked for replacement. Periodically, the user should demonstrate that an "adequate" ohmic reading equates to an adequate battery performance (>80% of capacity).

Similarly, acceptance criteria for "good" and "failed" cells should be established for other parameters such as float current, specific gravity, etc., if used to determine the ability of a battery to function as designed.

What happens if I change the make/model of ohmic test equipment after the battery has been installed for a period of time?

If a user decides to switch testers, either voluntarily or because the equipment is not supported/sold any longer, the user may have to establish a new base line and new parameters that indicate when the battery no longer performs as manufactured. The user always has a choice to perform a capacity test in lieu of establishing new parameters.

What are some of the differences between lead-acid and nickel-cadmium batteries?

There is a marked difference in the aging process of lead acid and nickel-cadmium station batteries. The difference in the aging process of these two types of batteries is chiefly due to the electrochemical process of the battery type. Aging and eventual failure of lead acid batteries is due to expansion and corrosion of the positive grid structure, loss of positive plate active material, and loss of capacity caused by physical changes in the active material of the positive plates. In contrast, the primary failure of nickel-cadmium batteries is due to the gradual linear aging of the active materials in the plates. The electrolyte of a nickel-cadmium battery only facilitates the chemical reaction (it functions only to transfer ions between the positive and negative plates), but is not chemically altered during the process like the electrolyte of a lead acid battery. A lead acid battery experiences continued corrosion of the positive plate and grid structure throughout its operational life while a nickel-cadmium battery does not.

Changes to the properties of a lead acid battery when periodically measured and trended to a baseline, can indicate aging of the grid structure, positive plate deterioration, or changes in the active materials in the plate.

Because of the clear differences in the aging process of lead acid and nickel-cadmium batteries, there are no significantly measurable properties of the nickel-cadmium battery that can be measured at a periodic interval and trended to determine aging. For this reason, Table 1-4(c) (Protection System Station dc supply Using nickel-cadmium [NiCad] Batteries) only specifies one minimum maintenance activity and associated maximum maintenance interval necessary to verify that the station battery can perform as manufactured by evaluating cell/unit

measurements indicative of battery performance against the station battery baseline. This maintenance activity is to conduct a performance or modified performance capacity test of the entire battery bank.

Why in Table 1-4 of PRC-005-2 is there a maintenance activity to inspect the structural intergrity of the battery rack?

The purpose of this inspection is to verify that the battery rack is correctly installed and has no deterioration that could weaken its structural integrity.
Because the battery rack is specifically manufactured for the battery that is mounted on it, weakening of its structural members by rust or corrosion can physically jeopardize the battery.

What is required to comply with the "Unintentional dc Grounds" requirement?

In most cases, the first ground that appears on a battery is not a problem. It is the unintentional ground that appears on the opposite pole that becomes problematic. Even then many s~~S~~ystems are designed to operate favorably under some unintentional DC ground situations. It is up to the owner of the Protection System to determine if corrective actions are needed on detected unintentional DC grounds. The standard merely requires that a check be made for the existence of Unintentional DC Grounds. Obviously, a "check-off" of some sort will have to be devised by the inspecting entity to document that a check is routinely done for Unintentional DC Grounds because of the possible consequences to the Protection System.

Where the standard refers to "all cells," is it sufficient to have a documentation method that refers to "all cells," or do we need to have separate documentation for every cell? For example, do I need 60 individual documented check-offs for good electrolyte level, or would a single check-off per bank be sufficient?

A single check-off per battery bank is sufficient for documentation, as long as the single check-off attests to checking all cells/units.

Does this standard refer to Station batteries or all batteries; for example, Communications Site Batteries?

This standard refers to Station Batteries. The drafting team does not believe that the scope of this standard refers to communications sites. The batteries covered under PRC-005-2 are the batteries that supply the trip current to the trip coils of the interrupting devices that are a part of the Protection System. The SDT believes that a loss of power to the communications s~~S~~ystems at a remote site would cause the communications s~~S~~ystems associated with protective relays to alarm at the substation. At this point, the corrective actions can be initiated.

~~***My VRLA batteries have multiple-cells within an individual battery jar (or unit); how am I expected to comply with the cell-to-cell ohmic measurement requirements on these units that I cannot get to?***~~

~~Measurement of cell/unit (not all batteries allow access to "individual cells" some "units" or jars may have multiple cells within a jar) internal ohmic values of all types of lead-acid batteries where the cells of the battery are not visible is a station dc supply maintenance activity in Table 1-4.~~

What are cell/unit internal ohmic measurements?

With the introduction of Valve-Regulated Lead-Acid (VRLA) batteries to station dc supplies in the 1980's several of the standard maintenance tools that are used on Vented Lead-Acid (VLA) batteries were unable to be used on this new type of lead-acid battery to determine its state of

health. The only tools that were available to give indication of the health of these new VRLA batteries were voltage readings of the total battery voltage, the voltage of the individual cells and periodic discharge tests.

In the search for a tool for determining the health of a VRLA battery several manufacturers studied the electrical model of a lead acid battery's current path through its cell. The overall battery current path consists of resistance and inductive and capacitive reactance. The inductive reactance in the current path through the battery is so minuscule when compared to the huge capacitive reactance of the cells that it is often ignored in most circuit models of the battery cell. Taking the basic model of a battery cell manufacturers of battery test equipment have developed and marketed testing devices to take measurements of the current path to detect degradation in the internal path through the cell.

In the battery industry, these various types of measurements are referred to as ohmic measurements. Terms used by the industry to describe ohmic measurements are ac conductance, ac impedance, and dc resistance. They are defined by the test equipment providers and IEEE and refer to the method of taking ohmic measurements of a lead acid battery. For example, in one manufacturer's ac conductance equipment measurements are taken by applying a voltage of a known frequency and amplitude across a cell or battery unit and observing the ac current flow it produces in response to the voltage. A manufacturer of an ac impedance meter measures ac current of a known frequency and amplitude that is passed through the whole battery string and determines the impedances of each cell or unit by measuring the resultant ac voltage drop across them. On the other hand, dc resistance of a cell is measured by a third manufacturer's equipment by applying a dc ~~L~~load across the cell or unit and measuring the step change in both the voltage and current to calculate the internal dc resistance of the cell or unit.

It is important to note that because of the rapid development of the market for ohmic measurement devices, there were no standards developed or used to mandate the test signals used in making ohmic measurements. Manufacturers using proprietary methods and applying different frequencies and magnitudes for their signals have developed a diversity of measurement devices. This diversity in test signals coupled with the three different types of ohmic measurements techniques (impedance conductance and resistance) make it impossible to always get the same ohmic measurement for a cell with different ohmic measurement devices. However, IEEE has recognized the great value for choosing one device for ohmic measurement, no matter who makes it or the method to calculate the ohmic measurement. The only caution given by IEEE and the battery manufacturers is that when trending the cells of a lead acid station battery consistent ohmic measurement devices should be used to establish the baseline measurement and to trend the battery set for its entire life.

For VRLA batteries both IEEE Standard 1188 (Maintenance, Testing and Replacement of VRLA Batteries) and IEEE Standard 1187 (Installation Design and Installation of VRLA Batteries) recognize the importance of the maintenance activity of establishing a baseline for "cell/unit internal ohmic measurements (impedance, conductance and resistance)" and trending them at frequent intervals over the life of the battery. There are extensive discussions about the need for taking these measurements in these standards. IEEE Standard 1188 requires taking internal ohmic values as described in Annex C4 during regular inspections of the station battery. For VRLA batteries IEEE Standard 1188 in talking about the necessity of establishing a baseline and

trending it over time says, "…depending on the degree of change a performance test, cell replacement or other corrective action may be necessary…" (IEEE std 1188-2005, C.4 page 18).

For VLA batteries IEEE Standard 484 (Installation of VLA batteries) gives several guidelines about establishing baseline measurements on newly installed lead acid stationary batteries. The standard also discusses the need to look for significant changes in the ohmic measurements, the caution that measurement data will differ with each type of model of instrument used, and lists a number of factors that affect ohmic measurements.

At the beginning of the 21st century, EPRI conducted a series of extensive studies to determine the relationship of internal ohmic measurements to the capacity of a lead acid battery cell. The studies indicated that internal ohmic measurements were in fact a good indicator of a lead acid battery cell's capacity, but because users often were only interested in the total station battery capacity and the technology does not precisely predict overall battery capacity, if a user only needs "an accurate measure of the overall battery capacity," they should "perform a battery capacity test."

Prior to the EPRI studies some large and small companies which owned and maintained station dc supplies in NERC Protection Systems developed maintenance programs where trending of ohmic measurements of cells/units of the station's battery became the maintenance activity for determining if the station battery could perform as manufactured. By evaluation of the trending of the ohmic measurements over time, the owner could track the performance of the individual components of the station battery and determine if a total station battery or components of it required capacity testing, removal, replacement or in many instances replacement of the entire station battery. By taking this condition based approach these owners have eliminated having to perform capacity testing at prescribed intervals to determine if a battery needs to be replaced and are still able to effectively determine if a station battery can perform as manufactured.

My VRLA batteries have multiple-cells within an individual battery jar (or unit); how am I expected to comply with the cell-to-cell ohmic measurement requirements on these units that I cannot get to?

Measurement of cell/unit (not all batteries allow access to "individual cells" some "units" or jars may have multiple cells within a jar) internal ohmic values of all types of lead acid batteries where the cells of the battery are not visible is a station dc supply maintenance activity in Table 1-4. In cases where individual cells in a multi-cell unit are in accessible, an ohmic measurement of the entire unit may be made.

I have a concern about my batteries being used to support additional auxiliary loads beyond my protection control systems in a generation station. Is ohmic measurement testing sufficient for my needs?

While this standard is focused on addressing requirements for Protection Systems, if batteries are used to service other load requirements beyond that of Protection Systems (e.g. pumps, valves, inverter loads), the functional entity may consider additional testing to confirm that the capacity of the battery is sufficient to support all loads.

Why verify voltage?

There are two required maintenance activities associated with verification of dc voltages in Table 1-4. These two required activities are to verify station dc supply voltage and float voltage

of the battery charger, and have different maximum maintenance intervals. Both of these voltage verification requirements relate directly to the battery charger maintenance.

The verification of the dc supply voltage is simply an observation of battery voltage to prove that the charger has not been lost or is not malfunctioning; a reading taken from the battery charger panel meter or even SCADA values of the dc voltage could be some of the ways that one could satisfy the requirements. Low battery voltage below float voltage indicates that the battery may be on discharge and, if not corrected, the station battery could discharge down to some extremely low value that will not operate the Protection System. High voltage, close to or above the maximum allowable dc voltage for equipment connected to the station dc supply indicates the battery charger may be malfunctioning by producing high dc voltage levels on the Protection System. If corrective actions are not taken to bring the high voltage down, the dc power supplies and other electronic devices connected to the station dc supply may be damaged. The maintenance activity of verifying the float voltage of the battery charger is not to prove that a charger is lost or producing high voltages on the station dc supply, but rather to prove that the charger is properly floating the battery within the proper voltage limits. As above, there are many ways that this requirement can be met.

Why check for the electrolyte level?

In vented lead-acid (VLA) and nickel-cadmium (NiCad) batteries the visible electrolyte level must be checked as one of the required maintenance activities that must be performed at an interval that is equal to or less than the maximum maintenance interval of Table 1-4. Because the electrolyte level in valve-regulated lead-acid (VRLA) batteries cannot be observed, there is no maintenance activity listed in Table 1-4 of the standard for checking the electrolyte level. Low electrolyte level of any cell of a VLA or NiCad station battery is a condition requiring correction. Typically, the electrolyte level should be returned to an acceptable level for both types of batteries (VLA and NiCad) by adding distilled or other approved-quality water to the cell.

Often people confuse the interval for watering all cells required due to evaporation of the electrolyte in the station battery cells with the maximum maintenance interval required to check the electrolyte level. In many of the modern station batteries, the jar containing the electrolyte is so large with the band between the high and low electrolyte level so wide that normal evaporation which would require periodic watering of all cells takes several years to occur. However, because loss of electrolyte due to cracks in the jar, overcharging of the station battery, or other unforeseen events can cause rapid loss of electrolyte; the shorter maximum maintenance intervals for checking the electrolyte level are required. A low level of electrolyte in a VLA battery cell which exposes the tops of the plates can cause the exposed portion of the plates to accelerated sulfation resulting in loss of cell capacity. Also, in a VLA battery where the electrolyte level goes below the end of the cell withdrawal tube or filling funnel, gasses can exit the cell by the tube instead of the flame arrester and present an explosion hazard.

What are the parameters that can be evaluated in Tables 1-4(a) and 1-4(b)?

The most common parameter that is periodically trended and evaluated by industry today to verify that the station battery can perform as manufactured is internal ohmic cell/unit measurements.

In the mid 1990s, several large and small utilities began developing maintenance and testing programs for Protection System station batteries using a condition based maintenance

approach of trending internal ohmic measurements to each station battery cell's baseline value. Battery owners use the data collected from this maintenance activity to determine (1) when a station battery requires a capacity test (instead of performing a capacity test on a predetermined, prescribed interval), (2) when an individual cell or battery unit should be replaced, or (3) based on the analysis of the trended data, if the station battery should be replaced without performing a capacity test.

Other examples of measurable parameters that can be periodically trended and evaluated for lead acid batteries are cell voltage, float current, connection resistance. However, periodically trending and evaluating cell/unit Ohmic measurements are the most common battery/cell parameters that are evaluated by industry to verify a lead acid battery string can perform as manufactured.

Why does it appear that there are two maintenance activities in Table 1-4(b) (for VRLA batteries) that appear to be the same activity and have the same maximum maintenance interval?

There are two different and distinct reasons for doing almost the same maintenance activity at the same interval for valve-regulated lead-acid (VRLA) batteries. The first similar activity for VRLA batteries (Table 1-4(b)) that has the same maximum maintenance interval is to "measure battery cell/unit internal ohmic values." Part of the reason for this activity is because the visual inspection of the cell condition is unavailable for VRLA batteries. Besides the requirement to measure the internal ohmic measurements of VRLA batteries to determine the internal health of the cell, the maximum maintenance interval for this activity is significantly shorter than the interval for vented lead-acid (VLA) due to some unique failure modes for VRLA batteries. Some of the potential problems that VRLA batteries are susceptible to that do not affect VLA batteries are thermal runaway, cell dry-out, and cell reversal when one cell has a very low capacity.

The other similar activity listed in Table 1-4(b) is "…verify that the station battery can perform as manufactured by evaluating the measured cell/unit measurements indicative of battery performance (e.g. internal ohmic values) ~~to~~ against the station battery baseline." This activity allows an owner the option to choose between this activity with its much shorter maximum maintenance interval or the longer maximum maintenance interval for the maintenance activity to "Verify that the station battery can perform as manufactured by conducting a performance~~, service,~~ or modified performance capacity test of the entire battery bank."

For VRLA batteries, there are two drivers for internal ohmic readings. The first driver is for a means to trend battery life. Trending against the baseline of VRLA cells in a battery string is essential to determine the approximate state of health of the battery. ~~For example, using o~~Ohmic measurement testing ~~testing~~ may be used as the mechanism for measuring the battery cells. ~~, then, if~~ If all the cells in the string exhibit~~show to be in~~ a consistent trend line and that trend line has not risen above ~~and that trend line has not risen above say a 25-30%~~ a specific deviation (e.g. 30%) over baseline, then a judgment can be made that the battery is still in a reasonably good state of health and able to 'perform as manufactured.'~~.~~ ~~This judgment can assume that the battery is still able to 'perform as manufactured.'~~ It is essential that the specific deviation mentioned above is based on data (test or otherwise) that correlates the ohmic readings for a specific battery/tester combination to the health of the battery. ~~It would be wise to confirm the accepted deviation range with the manufacturer of the battery in question to assure good judgment in deciding on the state of health to perform as manufactured. A comparison and trending against the baseline new battery ohmic reading can~~ may be used in

~~lieu of capacity tests to determine remaining battery life. Remaining battery life is analogous to stating that the battery is still able to "perform as manufactured."~~ This is the intent of the "perform **as** manufactured six-month test" at Row 4 on Table 1-4b.

The second big driver is VRLA batteries tendency for thermal runaway. This is the intent of the "thermal runaway test" at Row 2 on Table 1-4b. In order to detect a cell in thermal runaway, you need not necessarily have a formal trending program. When a single cell/unit changes significantly or significantly varies from the other cells (e.g. a doubling of resistance/impedance or a 50% decrease in conductance), there is a high probability that the cell/unit/string needs to be replaced as soon as possible. ~~to track when a cell has reached a range of **25 to 30**25 percent increase over baseline (or some other value as determined by your experience with a particular type/model of battery). Rather, it will stick out like a sore thumb when compared to the other cells in a string at a given point in time, regardless of the age of all the cells in a string.~~ In other words, if the battery is 10 years old and all the cells have~~are~~ ~~gradually approaching a 25 **to 30** percent~~ approached a significant change in~~increase in~~ ohmic values over baseline, then you have a battery which is approaching end of life. You need to get ready to buy a new battery, but you do not have to worry about an impending catastrophic failure. On the other hand, if the battery is five years old and you have one cell that has a markedly different ohmic reading than all the other cells, then you need to be worried that this cell is in thermal runaway and catastrophic failure is imminent.

If an entity elects to use a capacity test rather than a cell ohmic value trending program, this does not eliminate the need to be concerned about thermal runaway – the entity still needs to do the six-month readings and look for cells which are outliers in the string but they need not trend results against the factory/as new baseline. Some entities will not mind the extra administrative burden of having the ongoing trending program against baseline - others would rather just do the capacity test and not have to trend the data against baseline. Nonetheless, all entities must look for ohmic outliers on a six-month basis.

It is possible to accomplish both tasks listed (trend testing for capability and testing for thermal runaway candidates) with the very same ohmic test. It becomes an analysis exercise of watching the trend from baselines and watching for the oblique cell measurement.

15.5 Associated communications equipment (Table 1-2)

The equipment used for tripping in a communications-assisted trip scheme is a vital piece of the trip circuit. Remote action causing a local trip can be thought of as another parallel trip path to the trip coil that must be tested. Besides the trip output and wiring to the trip coil(s), there is also a communications medium that must be maintained. Newer technologies now exist that achieve communications-assisted tripping without the conventional wiring practices of older technology. For example, older technologies may have included Frequency Shift Key methods. This technology requires that guard and trip levels be maintained. The actual tripping path(s) to the trip coil(s) may be tested as a parallel trip path within the dc control circuitry tests. Emerging technologies transfer digital information over a variety of carrier mediums that are then interpreted locally as trip signals. The requirements apply to the communicated signal needed for the proper operation of the protective relay trip logic or scheme. Therefore, this standard is applied to equipment used to convey both trip signals (permissive or direct) and block signals.

It was the intent of this standard to require that a test be performed on any communications-assisted trip scheme, regardless of the vintage of technology. The essential element is that the tripping (or blocking) occurs locally when the remote action has been asserted; or that the tripping (or blocking) occurs remotely when the local action is asserted. Note that the required testing can still be done within the concept of testing by overlapping segments. Associated communications equipment can be (but is not limited to) testing at other times and different frequencies as the protective relays, the individual trip paths and the affected circuit interrupting devices.

Some newer installations utilize digital signals over fiber-optics from the protective relays in the control house to the circuit interrupting device in the yard. This method of tripping the circuit breaker, even though it might be considered communications, must be maintained per the dc control circuitry maintenance requirements.

15.5.1 Frequently Asked Questions:

What are some examples of mechanisms to check communications equipment functioning?

For unmonitored Protection Systems, various types of communications s~~S~~ystems will have different facilities for on-site integrity checking to be performed at least every four months during a substation visit. Some examples are, but not limited to:

- On-off power-line carrier s~~S~~ystems can be checked by performing a manual carrier keying test between the line terminals, or carrier check-back test from one terminal.
- Systems which use frequency-shift communications with a continuous guard signal (over a telephone circuit, analog microwave system, etc.) can be checked by observing for a loss-of-guard indication or alarm. For frequency-shift power-line carrier s~~S~~ystems, the guard signal level meter can also be checked.
- Hard-wired pilot wire line Protection Systems typically have pilot-wire monitoring relays that give an alarm indication for a pilot wire ground or open pilot wire circuit loop.
- Digital communications s~~S~~ystems typically have a data reception indicator or data error indicator (based on loss of signal, bit error rate, or frame error checking).

For monitored Protection Systems, various types of communications s~~S~~ystems will have different facilities for monitoring the presence of the communications channel, and activating alarms that can be monitored remotely. Some examples are, but not limited to:

- On-off power-line carrier s~~S~~ystems can be shown to be operational by automated periodic power-line carrier check-back tests with remote alarming of failures.
- Systems which use a frequency-shift communications with a continuous guard signal (over a telephone circuit, analog microwave system, etc.) can be remotely monitored with a loss-of-guard alarm or low signal level alarm.
- Hard-wired pilot wire line Protection Systems can be monitored by remote alarming of pilot-wire monitoring relays.
- Digital communications s~~S~~ystems can activate remotely monitored alarms for data reception loss or data error indications.
- Systems can be queried for the data error rates.

For the highest degree of monitoring of Protection Systems, the communications system must monitor all aspects of the performance and quality of the channel that show it meets the design performance criteria, including monitoring of the channel interface to protective relays.

- In many communications s~~S~~ystems signal quality measurements, including signal-to-noise ratio, received signal level, reflected transmitter power or standing wave ratio, propagation delay, and data error rates are compared to alarm limits. These alarms are connected for remote monitoring.
- Alarms for inadequate performance are remotely monitored at all times, and the alarm communications system to the remote monitoring site must itself be continuously monitored to assure that the actual alarm status at the communications equipment location is continuously being reflected at the remote monitoring site.

What is needed for the four-month inspection of communications-assisted trip scheme equipment?

The four-month inspection applies to unmonitored equipment. An example of compliance with this requirement might be, but is not limited to:

With each site visit, check that the equipment is free from alarms; check any metered signal levels, and that power is still applied. While this might be explicit for a particular type of equipment (i.e., FSK equipment), the concept should be that the entity verify that the communications equipment that is used in a Protection System is operable through a cursory inspection and site visit. This site visit can be eliminated on this particular example if the FSK equipment had a monitored alarm on Loss of Guard. Blocking carrier s~~S~~ystems with auto checkbacks will present an alarm when the channel fails allowing a visual indication. With no auto checkback, the channel integrity will need to be verified by a manual checkback or a two ended signal check. This check could also be eliminated by bring the auto checkback failure alarm to the monitored central location.

Does a fiber optic I/O scheme used for breaker tripping or control within a station, for example - transmitting a trip signal or control logic between the control house and the breaker control cabinet, constitute a communications system?

This equipment is presently classified as being part of the Protection System Control Circuitry and tested per the portions of Table 1 applicable to Protection System Control Circuitry, rather than those portions of the table applicable to communications equipment.

What is meant by "Channel" and "Communications Systems" in Table 1-2?

The transmission of logic or data from a relay in one station to a relay in another station for use in a pilot relay scheme will require a communications system of some sort. Typical relay communications systems use fiber optics, leased audio channels, power line carrier, and microwave. The overall communications system includes the channel and the associated communications equipment.

This standard refers to the "channel" as the medium between the transmitters and receivers in the relay panels such as a leased audio or digital communications circuit, power line and power line carrier auxiliary equipment, and fiber. The dividing line between the channel and the associated communications equipment is different for each type of media.

Examples of the Channel:

- Power Line Carrier (PLC) - The PLC channel starts and ends at the PLC transmitter and receiver output unless there is an internal hybrid. The channel includes the external hybrids, tuners, wave traps and the power line itself.
- Microwave –The channel includes the microwave multiplexers, radios, antennae and associated auxiliary equipment. The audio tone and digital transmitters and receivers in the relay panel are the associated communications equipment.
- Digital/Audio Circuit – The channel includes the equipment within and between the substations. The auxiliary communications equipment includes the relay panel transmitters and receivers and the interface equipment in the relays.

- Fiber Optic – The channel starts at the fiber optic connectors on the fiber distribution panel at the local station and goes to the fiber optic distribution panel at the remote substation. The jumpers that connect the relaying equipment to the fiber distribution panel and any optical-electrical signal format converters are the associated communications equipment

Figure 1-2, A-1 and A-2 at the end of this document show good examples of the communications channel and the associated communications equipment.

In Table 1-2, the Maintenance Activities section of the Protective System Communications Equipment and Channels refers to the quality of the channel meeting "performance criteria." What is meant by performance criteria?

Protection System communications channels must have a means of determining if the channel and communications equipment is operating normally. If the channel is not operating normally, an alarm will be indicated. For unmonitored systems, this alarm will probably be on the panel. For monitored systems, the alarm will be transmitted to a remote location.

Each entity will have established a nominal performance level for each ~~protective system~~ Protection System communications channel that is consistent with proper functioning of the Protection System. If that level of nominal performance is not being met, the system will go into alarm. Following are some examples of ~~protective system~~Protection System communications channel performance measuring:

- For direct transfer trip using a frequency shift power line carrier channel, a guard level monitor is part of the equipment. A normal receive level is established when the system is calibrated and if the signal level drops below an established level, the system will indicate an alarm.
- An on-off blocking signal over power line carrier is used for directional comparison blocking schemes on transmission lines. During a Fault, block logic is sent to the remote relays by turning on a local transmitter and sending the signal over the power line to a receiver at the remote end. This signal is normally off so continuous levels cannot be checked. These schemes use check-back testing to determine channel performance. A predetermined signal sequence is sent to the remote end and the remote end decodes this signal and sends a signal sequence back. If the sending end receives the correct information from the remote terminal, the test passes and no alarm is indicated. Full power and reduced power tests are typically run. Power levels for these tests are determined at the time of calibration.
- Pilot wire relay systems use a hardwire communications circuit to communicate between the local and remote ends of the protective zone. This circuit is monitored by circulating a dc current between the relay s~~S~~ystems. A typical level may be 1 mA. If the level drops below the setting of the alarm monitor, the system will indicate an alarm.
- Modern digital relay systems use data communications to transmit relay information to the remote end relays. An example of this is a line current differential scheme commonly used on transmission lines. The protective relays communicate current magnitude and phase information over the communications path to determine if the Fault is located in the protective zone. Quantities such as digital packet loss, bit error rate and channel delay are monitored to determine the quality of the channel. These

limits are determined and set during relay commissioning. Once set, any channel quality problems that fall outside the set levels will indicate an alarm.

The previous examples show how some protective relay communications channels can be monitored and how the channel performance can be compared to performance criteria established by the entity. This standard does not state what the performance criteria will be; it just requires that the entity establish nominal criteria so ~~protective system~~Protection System channel monitoring can be performed.

How is the performance criteria of Protection System communications equipment involved in the maintenance program?

An entity determines the acceptable performance criteria, depending on the technology implemented. If the communications channel performance of a Protection System varies from the pre-determined performance criteria for that system, then these results should be investigated and resolved.

How do I verify the A/D converters of microprocessor-based relays?

There are a variety of ways to do this. Two examples would be: using values gathered via data communications and automatically comparing these values with values from other sources, or using groupings of other measurements (such as vector summation of bus feeder currents) for comparison. Many other methods are possible.

15.6 Alarms (Table 2)

In addition to the tables of maintenance for the ~~Component~~components of a Protection System, there is an additional table added for alarms. This additional table was added for clarity. This enabled the common alarm attributes to be consolidated into a single spot, and, thus, make it easier to read the Tables 1-1 through 1-5. The alarms need to arrive at a site wherein a corrective action can be initiated. This could be a control room, operations center, etc. The alarming mechanism can be a standard alarming system or an auto-polling system; the only requirement is that the alarm be brought to the action-site within 24 hours. This effectively makes manned-stations equivalent to monitored stations. The alarm of a monitored point (for example a monitored trip path with a lamp) in a manned-station now makes that monitored point eligible for monitored status. Obviously, these same rules apply to a non-manned-station, which is that if the monitored point has an alarm that is auto-reported to the operations center (for example) within 24 hours, then it too is considered monitored.

15.6.1 Frequently Asked Questions:

Why are there activities defined for varying degrees of monitoring a Protection System ~~Component~~component when that level of technology may not yet be available?

There may already be some equipment available that is capable of meeting the highest levels of monitoring criteria listed in the Tables. However, even if there is no equipment available today that can meet this level of monitoring the standard establishes the necessary requirements for when such equipment becomes available. By creating a roadmap for development, this provision makes the standard technology neutral. The Standard Drafting Team wants to avoid the need to revise the standard in a few years to accommodate technology advances that may be coming to the industry.

Does a fail-safe "form b" contact that is alarmed to a 24/7 operation center classify as an alarm path with monitoring?

If the fail-safe "form-b" contact that is alarmed to a 24/7 operation center causes the alarm to activate for failure of any portion of the alarming path from the alarm origin to the 24/7 operations center, then this can be classified as an alarm path with monitoring.

15.7 Distributed UFLS and Distributed UVLS Systems (Table 3)

Distributed UFLS and d~~D~~istributed UVLS s~~S~~ystems have their maintenance activities documented in Table 3 due to their distributed nature allowing reduced maintenance activities and extended maximum maintenance intervals. Relays have the same maintenance activities and intervals as Table 1-1. Voltage and current-sensing devices have the same maintenance activity and interval as Table 1-3. DC s~~S~~ystems need only have their voltage read at the relay every 12 years. Control circuits have the following maintenance activities every 12 years:

- Verify the trip path between the relay and lock-out and/or auxiliary tripping device(s).
- Verify operation of any lock-out and/or auxiliary tripping device(s) used in the trip circuit.
- No verification of trip path required between the lock-out (and/or auxiliary tripping device) and the non-BES interrupting device.
- No verification of trip path required between the relay and trip coil for circuits that have no lock-out and/or auxiliary tripping device(s).
- No verification of trip coil required.

No maintenance activity is required for associated communication s~~S~~ystems for distributed UFLS and distributed UVLS schemes.

Non-BES interrupting devices that participate in a distributed UFLS or distributed UVLS scheme are excluded from the tripping requirement, and part of the control circuit test requirement; however, the part of the trip path control circuitry between the Load-Shed relay and lock-out or auxiliary tripping relay must be tested at least once every 12 years. In the case where there is no lock-out or auxiliary tripping relay used in a distributed UFLS or UVLS scheme which is not part of the BES, there is no control circuit test requirement. There are many circuit interrupting devices in the distribution system that will be operating for any given under-frequency event that requires tripping for that event. A failure in the tripping action of a single distributed system circuit breaker (or non-BES equipment interruption device) will be far less significant than, for example, any single t~~T~~ransmission Protection System failure, such as a failure of a bus differential lock-out relay. While many failures of these distributed system circuit breakers (or non-BES equipment interruption device) could add up to be significant, it is also believed that many circuit breakers are operated often on just Fault clearing duty; and, therefore, these circuit breakers are operated at least as frequently as any requirements that appear in this standard.

There are times when a Protection System ~~Component~~component will be used on a BES device, as well as a non-BES device, such as a battery bank that serves both a BES circuit breaker and a non-BES interrupting device used for UFLS. In such a case, the battery bank (or other Protection System ~~Component~~component) will be subject to the Tables of the standard because it is used for the BES.

15.7.1 Frequently Asked Questions:

The standard reaches further into the distribution system than we would like for UFLS and UVLS

While UFLS and UVLS equipment are located on the distribution network, their job is to protect the Bulk Electric System. This is not beyond the scope of NERC's 215 authority.

FPA section 215(a) definitions section defines bulk power system as: "(A) facilities and control Systems necessary for operating an interconnected electric energy transmission network (or any portion thereof)." That definition, then, is limited by a later statement which adds the term bulk power system "…does not include facilities used in the local distribution of electric energy." Also, Section 215 also covers users, owners, and operators of bulk power Facilities.

UFLS and UVLS (when the UVLS is installed to prevent system voltage collapse or voltage instability for BES reliability) are not "used in the local distribution of electric energy," despite their location on local distribution networks. Further, if UFLS/UVLS ~~f~~Facilities were not covered by the reliability standards, then in order to protect the integrity of the BES during under-frequency or under-voltage events, that Load would have to be shed at the Transmission bus to ensure the Load-generation balance and voltage stability is maintained on the BES.

15.8 Examples of Evidence of Compliance

To comply with the requirements of this standard, an entity will have to document and save evidence. The evidence can be of many different forms. The Standard Drafting Team recognizes that there are concurrent evidence requirements of other NERC standards that could, at times, fulfill evidence requirements of this Standard.

15.8.1 Frequently Asked Questions:

What forms of evidence are acceptable?

Acceptable forms of evidence, as relevant for the requirement being documented include, but are not limited to:

- Process documents or plans
- Data (such as relay settings sheets, photos, SCADA, and test records)
- Database lists, records and/or screen shots that demonstrate compliance information
- Prints, diagrams and/or schematics
- Maintenance records
- Logs (operator, substation, and other types of log)
- Inspection forms
- Mail, memos, or email proving the required information was exchanged, coordinated, submitted or received
- Check-off forms (paper or electronic)
- Any record that demonstrates that the maintenance activity was known, accounted for, and/or performed.

If I replace a failed Protection System ~~Component~~component with another ~~Component~~component, what testing do I need to perform on the new ~~Component~~component?

In order to reset the Table 1 maintenance interval for the replacement ~~Component~~component, all relevant Table 1 activities for the ~~Component~~component should be performed.

I have evidence to show compliance for PRC-016 ("Special Protection System Misoperation"). Can I also use it to show compliance for this Standard, PRC-005-2?

Maintaining evidence for operation of Special Protection Systems could concurrently be utilized as proof of the operation of the associated trip coil (provided one can be certain of the trip coil involved). Thus, the reporting requirements that one may have to do for the Misoperation of a Special Protection Scheme under PRC-016 could work for the activity tracking requirements under this PRC-005-2.

I maintain Disturbance records which show Protection System operations. Can I use these records to show compliance?

These records can be concurrently utilized as dc trip path verifications, to the degree that they demonstrate the proper function of that dc trip path.

I maintain test reports on some of my Protection System ~~Component~~component~~s~~. Can I use these test reports to show that I have verified a maintenance activity?

Yes.

References

1. Protection System Maintenance: A Technical Reference. Prepared by the System Protection and Controls Task Force of the NERC Planning Committee. Dated September 13, 2007.

2. "Predicating The Optimum Routine test Interval For Protection Relays," by J. J. Kumm, M.S. Weber, D. Hou, and E. O. Schweitzer, III, IEEE Transactions on Power Delivery, Vol. 10, No. 2, April 1995.

3. "Transmission Relay System Performance Comparison For 2000, 2001, 2002, 2003, 2004 and 2005," Working Group I17 of Power System Relaying Committee of IEEE Power Engineering Society, May 2006.

4. "A Survey of Relaying Test Practices," Special Report by WG I11 of Power System Relaying Committee of IEEE Power Engineering Society, September 16, 1999.

5. "Transmission Protective Relay System Performance Measuring Methodology," Working Group I3 of Power System Relaying Committee of IEEE Power Engineering Society, January 2002.

6. "Processes, Issues, Trends and Quality Control of Relay Settings," Working Group C3 of Power System Relaying Committee of IEEE Power Engineering Society, December 2006.

7. "Proposed Statistical Performance Measures for Microprocessor-Based Transmission-Line Protective Relays, Part I - Explanation of the Statistics, and Part II - Collection and Uses of Data," Working Group D5 of Power System Relaying Committee of IEEE Power Engineering Society, May 1995; Papers 96WM 016-6 PWRD and 96WM 127-1 PWRD, 1996 IEEE Power Engineering Society Winter Meeting.

8. "Analysis And Guidelines For Testing Numerical Protection Schemes," Final Report of CIGRE WG 34.10, August 2000.

9. "Use of Preventative Maintenance and System Performance Data to Optimize Scheduled Maintenance Intervals," H. Anderson, R. Loughlin, and J. Zipp, Georgia Tech Protective Relay Conference, May 1996.

10. "Battery Performance Monitoring by Internal Ohmic Measurements" EPRI Application Guidelines for Stationary Batteries TR- 108826 Final Report, December 1997.

11. "IEEE Recommended Practice for Maintenance, Testing, and Replacement of Valve-Regulated Lead-Acid (VRLA) Batteries for Stationary Applications," IEEE Power Engineering Society Std 1188 – 2005.

12. "IEEE Recommended Practice for Maintenance, Testing, and Replacement of Vented Lead-Acid Batteries for Stationary Applications," IEEE Power & Engineering Society Std 45-2010.

13. "IEEE Recommended Practice for Installation design and Installation of Vented Lead-Acid Batteries for Stationary Applications," IEEE Std 484 – 2002.

14. "Stationary Battery Monitoring by Internal Ohmic Measurements," EPRI Technical Report, 1002925 Final Report, December 2002.

15. "Stationary Battery Guide: Design Application, and Maintenance" EPRI Revision 2 of TR-100248, 1006757, August 2002.

PSMT SDT References

16. “Essentials of Statistics for Business and Economics” Anderson, Sweeney, Williams, 2003

17. “Introduction to Statistics and Data Analysis” - Second Edition, Peck, Olson, Devore, 2005

18. “Statistical Analysis for Business Decisions” Peters, Summers, 1968

Figures

Figure 1: Typical Transmission System

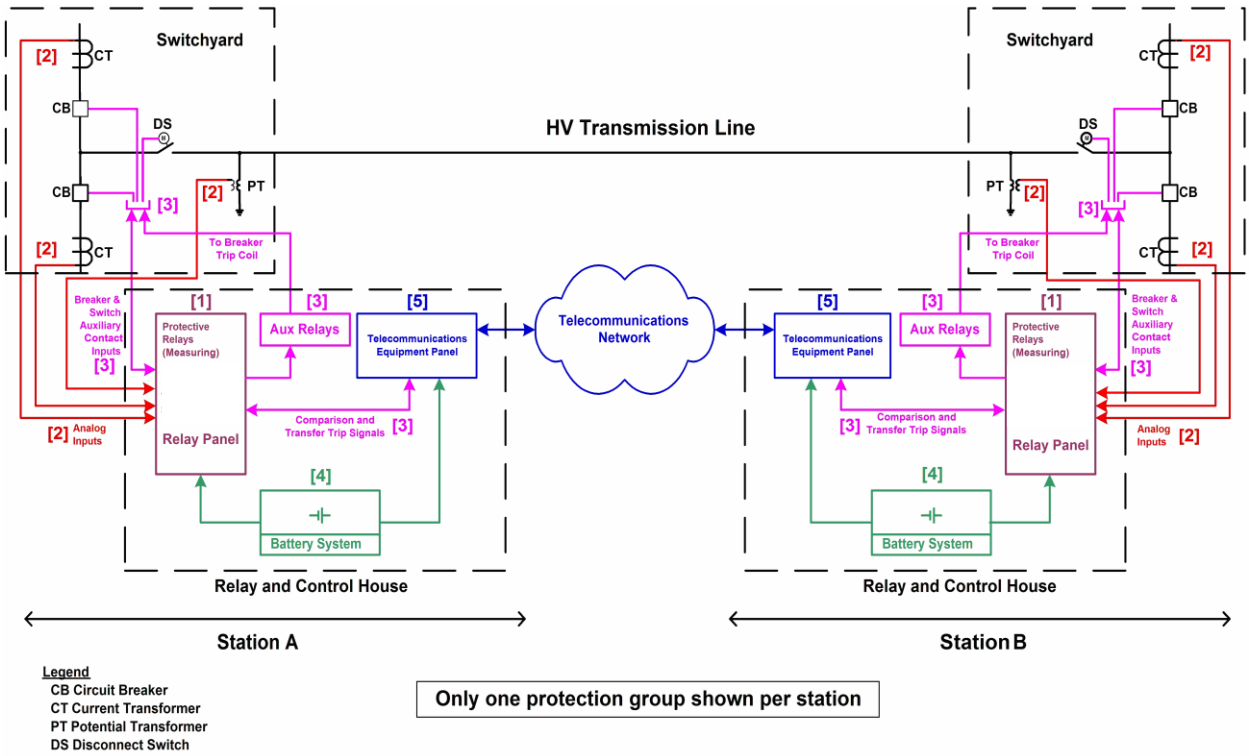

For information on ~~Component~~components, see ***Figure 1 & 2 Legend – ~~Component~~components of Protection Systems***

Figure 2: Typical Generation System

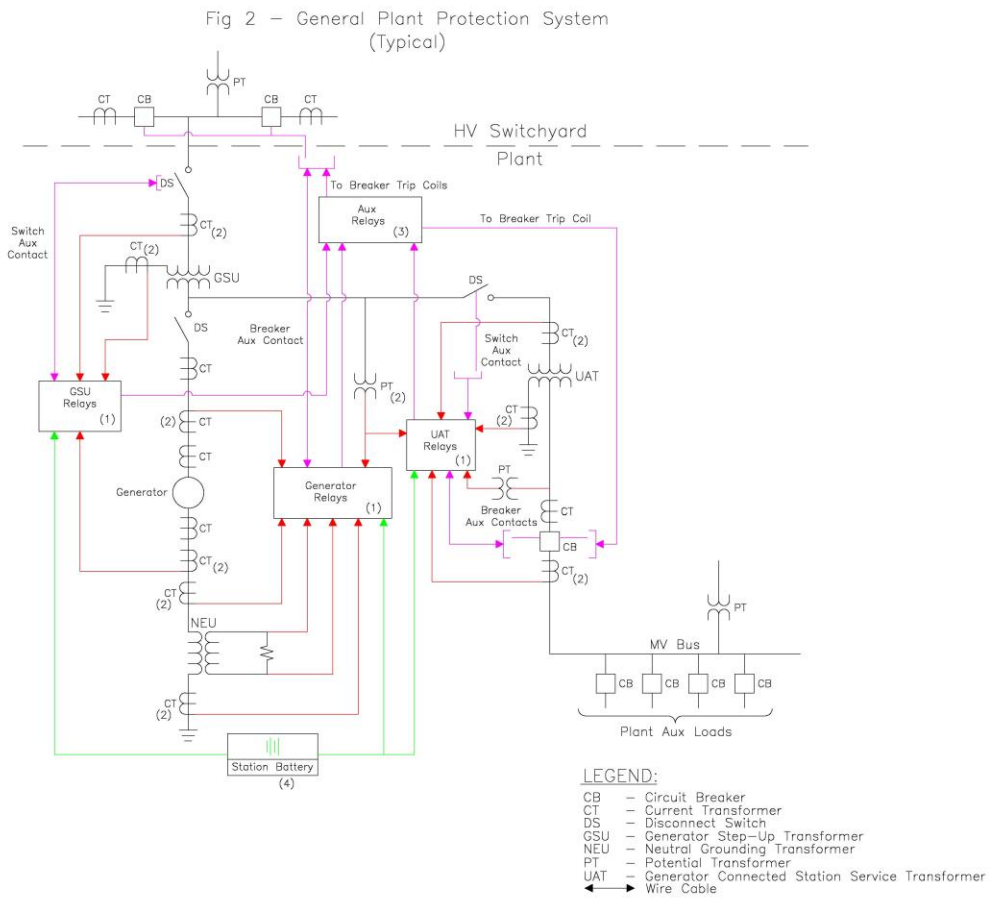

Note: Figure 2 may show elements that are not included within PRC-005-2, and also may not be all-inclusive; see the Applicability section of the standard for specifics.

For information on ~~Component~~components, see ***Figure 1 & 2 Legend – ~~Component~~components of Protection Systems***

Figure 1 & 2 Legend – ~~Component~~component~~s~~ of Protection Systems

Number in Figure	~~Component~~component of Protection System	Includes	Excludes
1	Protective relays which respond to electrical quantities	All protective relays that use current and/or voltage inputs from current & voltage sensors and that trip the 86, 94 or trip coil.	Devices that use non-electrical methods of operation including thermal, pressure, gas accumulation, and vibration. Any ancillary equipment not specified in the definition of Protection Systems. Control and/or monitoring equipment that is not a part of the automatic tripping action of the Protection System
2	Voltage and current sensing devices providing inputs to protective relays	The signals from the voltage & current sensing devices to the protective relay input.	Voltage & current sensing devices that are not a part of the Protection System, including sync-check s~~S~~ystems, metering s~~S~~ystems and data acquisition s~~S~~ystems.
3	Control circuitry associated with protective functions	All control wiring (or other medium for conveying trip signals) associated with the tripping action of 86 devices, 94 devices or trip coils (from all parallel trip paths). This would include fiber-optic s~~S~~ystems that carry a trip signal as well as hard-wired s~~S~~ystems that carry trip current.	Closing circuits, SCADA circuits, other devices in control scheme not passing trip current
4	Station dc supply	Batteries and battery chargers and any control power system which has the function of supplying power to the protective relays, associated trip circuits and trip coils.	Any power supplies that are not used to power protective relays or their associated trip circuits and trip coils.
5	Communications s~~S~~ystems necessary for correct operation of protective functions	Tele-protection equipment used to convey specific information, in the form of analog or digital signals, necessary for the correct operation of protective functions.	Any communications equipment that is not used to convey information necessary for the correct operation of protective functions.

Additional information can be found in References

Appendix A

Appendix A

The following illustrates the concept of overlapping verifications and tests as summarized in Section 10 of the paper. As an example, Figure A-1 shows protection for a critical transmission line by carrier blocking directional comparison pilot relaying. The goal is to verify the ability of the entire two-terminal pilot protection scheme to protect for line Faults, and to avoid over-tripping for Faults external to the transmission line zone of protection bounded by the current transformer locations.

Figure A-1

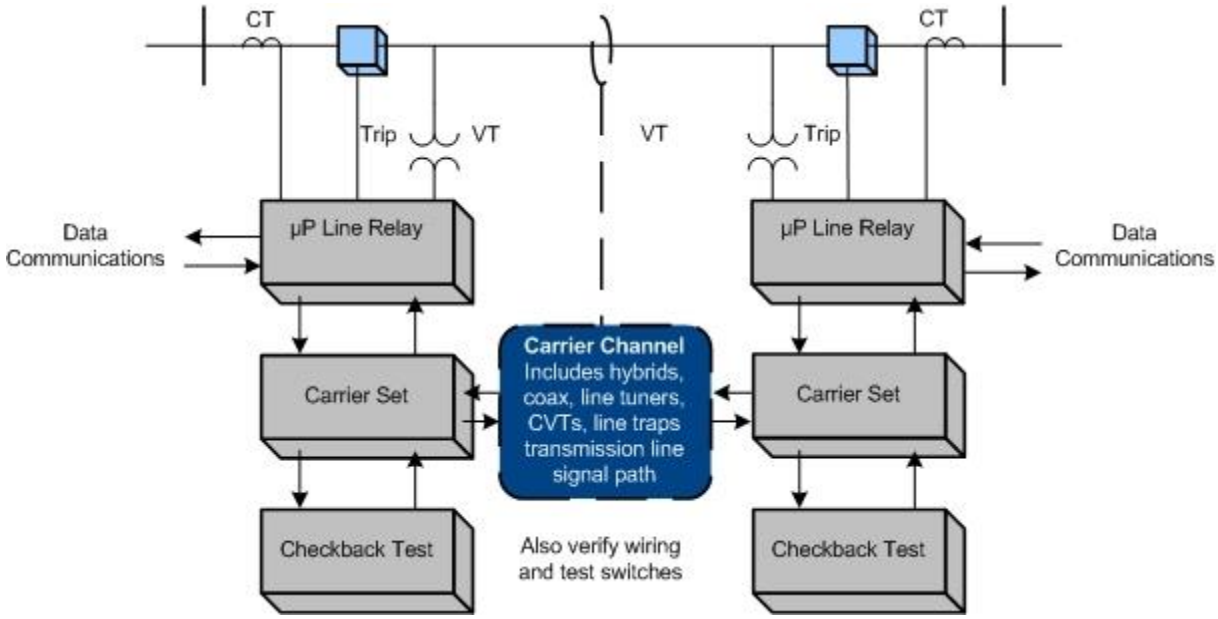

In this example (Figure A1), verification takes advantage of the self-monitoring features of microprocessor multifunction line relays at each end of the line. For each of the line relays themselves, the example assumes that the user has the following arrangements in place:

1. The relay has a data communications port that can be accessed from remote locations.
2. The relay has internal self-monitoring programs and functions that report failures of internal electronics, via communications messages or alarm contacts to SCADA.
3. The relays report loss of dc power, and the relays themselves or external monitors report the state of the dc battery supply.
4. The CT and PT inputs to the relays are used for continuous calculation of metered values of volts, amperes, plus Watts and VARs on the line. These metered values are reported by data communications. For maintenance, the user elects to compare these readings to those of other relays, meters, or DFRs. The other readings may be from redundant relaying or measurement s~~S~~ystems or they may be derived from values in other protection zones. Comparison with other such readings to within required relaying accuracy verifies Voltage & Current Sensing Devices, wiring, and analog signal input processing of the relays. One

effective way to do this is to utilize the relay metered values directly in SCADA, where they can be compared with other references or state estimator values.

5. Breaker status indication from auxiliary contacts is verified in the same way as in (2). Status indications must be consistent with the flow or absence of current.
6. Continuity of the breaker trip circuit from dc bus through the trip coil is monitored by the relay and reported via communications.
7. Correct operation of the on-off carrier channel is also critical to security of the Protection System, so each carrier set has a connected or integrated automatic checkback test unit. The automatic checkback test runs several times a day. Newer carrier sets with integrated checkback testing check for received signal level and report abnormal channel attenuation or noise, even if the problem is not severe enough to completely disable the channel.

These monitoring activities plus the check-back test comprise automatic verification of all the Protection System e~~E~~lements that experience tells us are the most prone to fail. But, does this comprise a complete verification?

Figure A-2

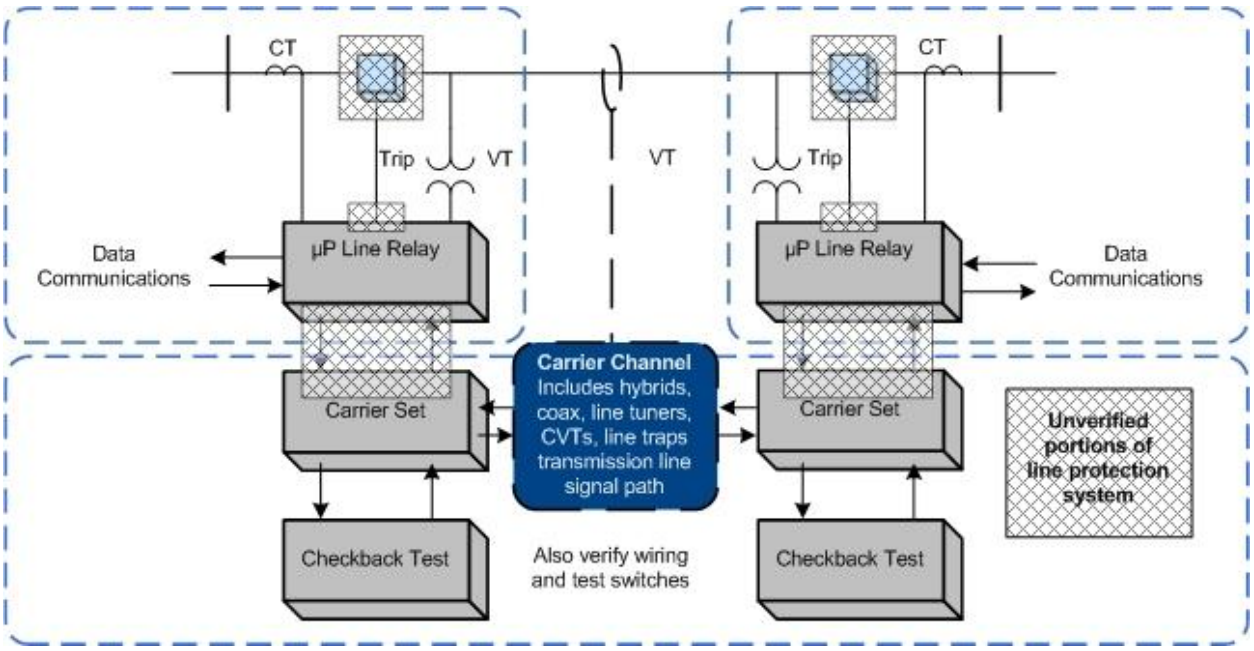

The dotted boxes of Figure A-2 show the sections of verification defined by the monitoring and verification practices just listed. These sections are not completely overlapping, and the shaded regions show e~~E~~lements that are not verified:

1. The continuity of trip coils is verified, but no means is provided for validating the ability of the circuit breaker to trip if the trip coil should be energized.

2. Within each line relay, all the microprocessors that participate in the trip decision have been verified by internal monitoring. However, the trip circuit is actually energized by the contacts of a small telephone-type "ice cube" relay within the line protective relay. The microprocessor energizes the coil of this ice cube relay through its output data port and a transistor driver circuit. There is no monitoring of the output port, driver circuit, ice cube relay, or contacts of that relay. These ~~Component~~components are critical for tripping the circuit breaker for a Fault.
3. The check-back test of the carrier channel does not verify the connections between the relaying microprocessor internal decision programs and the carrier transmitter keying circuit or the carrier receiver output state. These connections include microprocessor I/O ports, electronic driver circuits, wiring, and sometimes telephone-type auxiliary relays.
4. The correct states of breaker and disconnect switch auxiliary contacts are monitored, but this does not confirm that the state change indication is correct when the breaker or switch opens.

A practical solution for (1) and (2) is to observe actual breaker tripping, with a specified maximum time interval between trip tests. Clearing of naturally-occurring Faults are demonstrations of operation that reset the time interval clock for testing of each breaker tripped in this way. If Faults do not occur, manual tripping of the breaker through the relay trip output via data communications to the relay microprocessor meets the requirement for periodic testing.

PRC-005 does not address breaker maintenance, and its Protection System test requirements can be met by energizing the trip circuit in a test mode (breaker disconnected) through the relay microprocessor. This can be done via a front-panel button command to the relay logic, or application of a simulated Fault with a relay test set. However, utilities have found that breakers often show problems during Protection System tests. It is recommended that Protection System verification include periodic testing of the actual tripping of connected circuit breakers.

Testing of the relay-carrier set interface in (3) requires that each relay key its transmitter, and that the other relay demonstrate reception of that blocking carrier. This can be observed from relay or DFR records during naturally occurring Faults, or by a manual test. If the checkback test sequence were incorporated in the relay logic, the carrier sets and carrier channel are then included in the overlapping segments monitored by the two relays, and the monitoring gap is completely eliminated.

Appendix B

Appendix B — Protection System Maintenance Standard Drafting Team

Charles W. Rogers
Chairman
Consumers Energy Co.

John B. Anderson
Xcel Energy

Merle Ashton
Tri-State G&T

Bob Bentert
Florida Power & Light Company

Forrest Brock
Western Farmers Electric Cooperative

Aaron Feathers
Pacific Gas and Electric Company

Sam Francis
Oncor Electric Delivery

Carol Gerou
Midwest Reliability Organization

Russell C. Hardison
Tennessee Valley Authority

David Harper
NRG Texas Maintenance Services

James M. Kinney
FirstEnergy Corporation

Mark Lucas
ComEd

Kristina Marriott
ENOSERV

Al McMeekin
NERC

Michael Palusso
Southern California Edison

Mark Peterson
Great River Energy

John Schecter
American Electric Power

William D. Shultz
Southern Company Generation

Eric A. Udren
Quanta Technology

Scott Vaughan
City of Roseville Electric Department

Matthew Westrich
American Transmission Company

Philip B. Winston
Southern Company Transmission

David Youngblood
Luminant Power

John A. Zipp
ITC Holdings

Technical Justification

PRC-005-2 Protection System Maintenance

The purpose of the proposed PRC-005-2 Reliability Standard is to document and implement programs for the maintenance of all Protection Systems affecting the reliability of the Bulk Electric System (BES) so that these Protection Systems are kept in working order. The proposed Reliability Standard further combines the legacy Reliability Standards PRC-005-1b, PRC-008-0, PRC-011-0, and PRC-017-0, as these legacy Reliability Standards have similar reliability goals and requirements. This purpose is consistent with NERC's goal to create and implement reliability standards that enable or support at least one of the eight, defined Reliability Principles. The requirements of the proposed PRC-005-1 Reliability Standard directly support the following Reliability Principles:

> Reliability Principle 1 – Interconnected bulk power systems shall be planned and operated in a coordinated manner to perform reliably under normal and abnormal conditions as defined in the NERC Standards.
>
> Reliability Principle 7 – The reliability of the interconnected bulk power systems shall be assessed, monitored, and maintained on a wide-area basis.

The existing PRC-005-1b, PRC-008-0, PRC-011-0, and PRC-017-0 Reliability Standards, as assessed by the NERC System Protection and Control Task Force (SPCTF) in its report of March 8, 2007, contain several fundamental flaws within the requirements. Within this assessment, the SPCTF asserts, for all four standards, that:

> *"The listed requirements do not provide clear and sufficient guidance concerning the maintenance and testing of the Protection Systems to achieve the commonly stated purpose which is "To ensure all transmission and generation Protection Systems affecting the reliability of the Bulk Electric System (BES) are maintained and tested.""*

And further recommends that:

- *"The standards should clearly state which power system elements are being addressed."*
- *"The requirements should reflect the inherent differences between different technologies of protection systems."*
- *"The terms maintenance programs and testing programs should be clearly defined in the glossary. The terms "maintenance" and "testing" are not interchangeable, and the requirements must be clear in their application. Additional terms may also have to be added to the glossary for clarity."*
- *"The requirements of the existing standards, as stated, support time-based maintenance and testing, and should be expanded to include condition-based and performance-based maintenance and testing. The R1.2 summary of maintenance and testing procedures needs to*

have some minimum defined sub-requirements to insure that the stated intent of the standards is met to support review by the compliance monitor," and

- *The SPCTF recommends that standards PRC-005-1b, PRC-008-0, PRC-011-0, and PRC-017-0 … be included in a new Standard Authorization Request for a single Protection System maintenance and testing standard.*

Relative to PRC-005-1, the Federal Energy Regulatory Commission (FERC), in Order 693 further directed in paragraph 1476:

"… the Commission directs the ERO to develop a modification to PRC–005–1 through the Reliability Standards development process that includes a requirement that maintenance and testing of a protection system must be carried out within a maximum allowable interval that is appropriate to the type of the protection system and its impact on the reliability of the Bulk-Power System. We further direct the ERO to consider FirstEnergy's and ISO–NE's suggestion to combine PRC–005–1, PRC–008–0, PRC–011–0, and PRC–017–0 into a single Reliability Standard through the Reliability Standards development process."

FERC offered, in paragraphs 1492, 1517, and 1547, similar directives regarding PRC-008-0, PRC-011-0, and PRC-017-0, respectively.

With the development of the proposed PRC-005-2 Reliability Standard, the Standard Drafting Team (SDT) for Project 2007-17 – Protection System Maintenance, has followed the observations and recommendation of the NERC SPCTF assessment of PRC-005-1, PRC-008-0, PRC-011-0, and PRC-017-0. The SDT also addressed FERC's directives from Order 693. The SDT accomplishes this by:

1. Merging the reliability objectives of the four legacy standards.
2. Establishing minimum acceptable maintenance activities and accompanying maximum allowable maintenance intervals, reflecting various technologies of the Components being addressed.
3. Providing entities the flexibility to implement condition-based maintenance by adjusting the minimum acceptable maintenance activities and maximum allowable maintenance intervals to reflect condition monitoring of the various Protection System Components, and
4. Providing requirements for effective implementation of a performance-based maintenance program.

The proposed PRC-005-2 Reliability Standard includes five requirements that:

1. Combine the reliability goals of developing detailed tables of minimum maintenance activities and maximum maintenance intervals for all five Component Types addressed within the NERC definition of Protection System. These tables include adjustments to those activities and intervals to reflect the benefits of any condition monitoring that may be present.

2. Require, within Requirement R1, that entities using a time-based maintenance program (which includes condition-based maintenance) shall establish a Protection System Maintenance Program (PSMP) that conforms to the tables described above.
3. Establish, within Requirement R2, the opportunity and requirements for establishment of a performance-based maintenance program for those entities that have (or wish to develop) sufficient performance observations for their Protection System Components such that they may determine maintenance intervals other than those specified within the tables while maintaining the level of reliability prescribed within the Standard.
4. Require, within Requirements R3 and R4, that entities fully implement their PSMP as determined pursuant to Requirement R1 for time-based maintenance programs and Requirement R2 for performance-based maintenance programs, respectively.
5. Further require, within Requirement R5, that entities demonstrate efforts to correct any deficiency identified during a maintenance interval that causes the Component to not meet the intended performance and requires follow-up corrective action in order to return it to good working order. The SDT elected to not require that entities complete the resolution of these issues, as the time required to effectively resolve the problems may vary widely depending on the scope of that resolution.

The proposed PRC-005-2 Reliability Standard provides a comprehensive set of requirements and associated information (within the tables) that define a strong PSMP. Entities that monitor the actual condition of their Protection System Components are further empowered to utilize the monitoring to improve the efficiency and effectiveness of their PSMP, and those entities that have extensive performance data regarding their Protection System Components can utilize that performance data to further improve the efficiency and effectiveness of their PSMP.

Requirement R1:

R1. Each Transmission Owner, Generator Owner, and Distribution Provider shall establish a Protection System Maintenance Program (PSMP) for its Protection Systems identified in Section 4.2. *[Violation Risk Factor: Medium] [Time Horizon: Operations Planning]*

The PSMP shall:

1.1. *Identify which maintenance method (time-based, performance-based (per PRC-005 Attachment A), or a combination) is used to address each Protection System component type. All batteries associated with the station dc supply component type of a Protection System shall be included in a time-based program as described in Table 1-4 and Table 3.*

1.2. *Include the applicable monitoring attributes applied to each Protection System component type consistent with the maintenance intervals specified in Tables 1-1 through 1-5, Table 2, and Table 3 where monitoring is used to extend the maintenance intervals beyond those specified for unmonitored Protection System components.*

Background and Rationale

Establishment of a Protection System Maintenance Program as directed by Requirement R1 is needed to detect and correct plausible age- and service-related degradation of Protection System components. To ensure reliability of the Bulk Electric System, it is important that a Protection System continue to function as designed over its service life.

Requirement R1 establishes that entities develop a comprehensive maintenance program for Protection System components addressing the elements specified in the Protection System Maintenance Program definition:

Protection System Maintenance Program (PSMP) — An ongoing program by which Protection System components are kept in working order and proper operation of malfunctioning components is restored. A maintenance program for a specific component includes one or more of the following activities:

- Verify — Determine that the component is functioning correctly.
- Monitor — Observe the routine in-service operation of the component.
- Test — Apply signals to a component to observe functional performance or output behavior, or to diagnose problems.
- Inspect — Examine for signs of component failure, reduced performance and degradation.
- Calibrate — Adjust the operating threshold or measurement accuracy of a measuring element to meet the intended performance requirement.

Maintenance and testing programs often incorporate the following types of maintenance practices:

- TBM – time-based maintenance – externally prescribed maximum maintenance or testing intervals are applied for components or groups of components. The intervals may have been developed from prior experience or manufacturers' recommendations. The TBM verification interval is based on a variety of factors, including experience of the particular asset owner, collective experiences of several asset owners who are members of a country or regional council, etc. The maintenance intervals are fixed, and may range in number of months or in years.

  TBM can include review of recent power system events near the particular terminal. Operating records may verify that some portion of the Protection System has operated correctly since the last test occurred. If specific protection scheme components have demonstrated correct performance within specifications, the maintenance test time clock can be reset for those components.

- PBM – Performance-Based Maintenance - intervals are established based on analytical or historical results of TBM failure rates on a statistically significant population of similar components. Some level of TBM is generally followed. Statistical analyses accompanied by adjustments to maintenance intervals are used to justify continued use of PBM-developed extended intervals when test failures or in-service failures occur infrequently.

- CBM – condition-based maintenance – continuously or frequently reported results from non-disruptive self monitoring of components demonstrate operational status as those components remain in service. Whatever is verified by CBM does not require manual testing, but taking advantage of this requires precise technical focus on exactly what parts are included as part of the self diagnostics. While the term "Condition-Based-Maintenance" (CBM) is no longer used within the Standard itself, it is important to note that the concepts of CBM are a part of the Standard (in the form of extended time intervals through status-monitoring). These extended time intervals are only allowed (in the absence of PBM) if the condition of the device is monitored (CBM). As a consequence of the "monitored-basis-time-intervals" existing within the Standard the explanatory discussions within this Supplementary Reference concerned with CBM will remain in this reference and are discussed as CBM.

  A key feature of condition-based monitoring is that it effectively reduces the time delay between the moment of a protection failure and time the protection system owner knows about it, for the monitored segments of the protection system. In some cases, the verification is practically continuous - the time interval between verifications is minutes or seconds. Thus, technically sound, condition-based verification, meets the directives of FERC Order 693 even more effectively than the strictly time-based tests of the same system components.

  Microprocessor based Protection System components that perform continuous self-monitoring verify correct operation of most components within the device. Self-monitoring capabilities may include battery continuity, float voltages, unintentional grounds, the ac signal inputs to a relay, analog measuring circuits, processors and memory for measurement, protection, and

data communications, trip circuit monitoring, and protection or data communications signals (and many, many more measurements). For those conditions, failure of a self-monitoring routine generates an alarm and may inhibit operation to avoid false trips. When internal components, such as critical output relay contacts, are not equipped with self-monitoring, they can be manually tested. The method of testing may be local or remote, or through inherent performance of the scheme during a system event.

TBM, PBM, and CBM can be combined for individual components, or within a complete Protection System. The following diagram illustrates the relationship between various types of maintenance practices described in this section. In the Venn diagram the overlapping regions show the relationship of TBM with PBM historical information and the inherent continuous monitoring offered through CBM.

This figure shows:

- Region 1: The TBM intervals that are increased based on known reported operational condition of individual components that are monitoring themselves.
- Region 2: The TBM intervals that are adjusted up or down based on results of analysis of maintenance history of statistically significant population of similar products that have been subject to TBM.
- Region 3: Optimal TBM intervals based on regions 1 and 2.

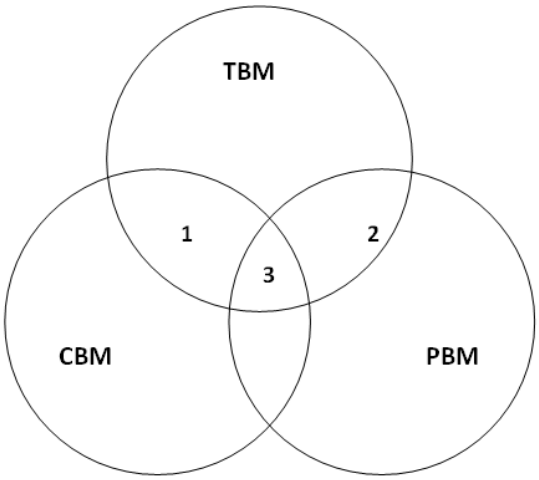

Relationship of time-based maintenance types

The PSMP shall:

R1, Part 1.1 Identify which maintenance method (time-based, performance-based per PRC-005 Attachment A, or a combination) is used to address each Protection System component type.

R1, Part 1.1 gives entities the flexibility to choose between the various methods listed above to maintain their Protection System equipment.

All batteries associated with the station dc supply Component Type of a Protection System shall be included in a time-based program as described in Table 1-4 and Table 3.

Batteries are the only element of a Protection System that is a perishable item with a shelf life. As a perishable item batteries require not only a constant float charge to maintain their freshness (charge), but periodic inspection to determine if there are problems associated with their aging process and testing to see if they are maintaining a charge or can still deliver their rated output as required.

Besides being perishable, a second unique feature of a battery that is unlike any other Protection System element is that a battery uses chemicals, metal alloys, plastics, welds, and bonds that must interact with each other to produce the constant dc source required for Protection Systems, undisturbed by ac system disturbances.

No type of battery manufactured today for Protection System application is free from problems that can only be detected over time by inspection and test. These problems can arise from variances in the manufacturing process, chemicals and alloys used in the construction of the individual cells, quality of welds and bonds to connect the components, the plastics used to make batteries and the cell forming process for the individual battery cells.

Other problems that require periodic inspection and testing can result from transportation from the factory to the job site, length of time before a charge is put on the battery, the method of installation, the voltage level and duration of equalize charges, the float voltage level used, and the environment that the battery is installed in.

All of the above mentioned factors and several more not discussed here are beyond the control of the Functional Entities that want to use a performance-based Protection System Maintenance (PBM) program. These inherent variances in the aging process of a battery cell make establishment of a designated segment based on manufacturer and type of battery impossible.

R1, Part 1.2 Include the applicable monitored Component attributes applied to each Protection System Component Type consistent with the maintenance intervals specified in Tables 1-1 through 1-5, Table 2, and Table 3 where monitoring is used to extend the maintenance intervals beyond those specified for unmonitored Protection System Components.

It is necessary for entities to specify the monitoring attributes utilized in their PSMP to demonstrate the existence of the monitoring elements which permit using the extended maintenance intervals established in Tables 1-1 through 1-5, Table 2, and Table 3 of the standard.

All maintenance is fundamentally time-based. Default time-based intervals are commonly established to assure proper functioning of each component of the Protection System, when data on the reliability of the components is not available other than observations from time-based maintenance. Excessive maintenance can actually decrease the reliability of the component or system. It is not unusual to cause failure of a component by removing it from service and restoring it. The improper application of test signals may cause failure of a component. Making use of the extended intervals by employing component monitoring minimizes human performance errors. The following factors may influence the established default intervals:

- If continuous indication of the functional condition of a component is available (from relays or chargers or any self monitoring device), then the intervals may be extended or manual testing may be eliminated. This is referred to as condition-based maintenance or CBM. CBM is valid only for precisely the components subject to monitoring. In the case of microprocessor-based relays, self-monitoring may not include automated diagnostics of every component within a microprocessor.
- Previous maintenance history for a group of components of a common type may indicate that the maintenance intervals can be extended while still achieving the desired level of performance. This is referred to as Performance-Based Maintenance or PBM. It is also sometimes referred to as reliability-centered maintenance or RCM, but PBM is used in this document.
- Observed proper operation of a component may be regarded as a maintenance verification of the respective component or element in a microprocessor-based device. For such an observation, the maintenance interval may be reset only to the degree that can be verified by data available on the operation. For example, the trip of an electromechanical relay for a fault verifies the trip contact and trip path, but only through the relays in series that actually operated; one operation of this relay cannot verify correct calibration.

Requirement R2:

Overview

Requirement 2, stated below, deals with Performance Based Maintenance. The requirement refers to Attachment A. Rather than simply list Attachment A, the requirements of Attachment A are listed below with a technical justification discussion for each. The criteria within Attachment A are largely based on application of statistical analysis theory.

Requirement R2

R2. Each Transmission Owner, Generator Owner, and Distribution Provider that uses performance-based maintenance intervals in its PSMP shall follow the procedure established in PRC-005 Attachment A to establish and maintain its performance-based intervals. *[Violation Risk Factor: Medium] [Time Horizon: Operations Planning]*

Background and Rationale

Performance Based Maintenance (PBM) is included in PRC-005-2 to allow utilities to adjust maintenance intervals based on their individual experience with equipment types and manufacture. The utility must create a segment of components with similar manufacture and model characteristics of statistically significant size.

> **Segment** – *Protection Systems or components of a consistent design standard, or a particular model or type from a single manufacturer that typically share other common elements. Consistent performance is expected across the entire population of a segment. A segment must contain at least sixty (60) individual components.*

Based on equipment failure(s) and out-of-tolerance(s), called Countable Events, in any given year, the utility then sets its maintenance interval to keep the Countable Events below 4%. Performance Based Maintenance is discussed at length in Section 9.1 of the Supplemental Reference for PRC-005-2. Many of the technical justifications shown below come from of the Supplemental Reference. Each requirement of Attachment A will now be listed and individually discussed.

> **Countable Event** – *A failure of a component requiring repair or replacement, any condition discovered during the maintenance activities in Tables 1-1 through 1-5 and Table 3 which requires corrective action, or a Misoperation attributed to hardware failure or calibration failure. Misoperations due to product design errors, software errors, relay settings different from specified settings, Protection System component configuration errors, or Protection System application errors are not included in Countable Events.*

1. Develop a list with a description of Components included in each designated Segment of the Protection System Component population, with a minimum **segment** population of 60 Components.

   A sample size requirement can be estimated using the bound on the Error of Distribution Formula when the expected result is of a “Pass/Fail” format and will be between 0 and 1.0.

The Error of Distribution Formula is:

$$B = z\sqrt{\frac{\pi(1-\pi)}{n}}$$

Where:

B = bound on the error of distribution (allowable error)

z = standard error

π = expected failure rate

n = sample size required

Solving for n provides:

$$n = \pi(1-\pi)\left(\frac{z}{B}\right)^2$$

One entity's population of components should be large enough to represent a sizeable sample of a vendor's overall population of manufactured devices. For this reason the following assumptions are made:
B = 5%
z = 1.96 (This equates to a 95% confidence level)
π = 4% (see number 5 below)
Using the equation above, n=59.0. The Standard Drafting Team chose to use the round number of 60 for the requirement.

2. Maintain the Components in each Segment according to the time-based maximum allowable intervals established in Tables 1-1 through 1-5 and Table 3 until results of maintenance activities for the Segment are available for a minimum of 30 individual Components of the Segment.

   An assumption that needs to be made when choosing a sample size is "the sampling distribution of the sample mean can be approximated by a normal probability distribution." The Central Limit Theorem states: "In selecting simple random samples of size *n* from a population, the sampling distribution of the sample mean *x* can be approximated by a normal probability distribution as the sample size becomes large." (Essentials of Statistics for Business and Economics, Anderson, Sweeney, Williams, 2003)

   To use the Central Limit Theorem in statistics, the population size should be large. The references below are supplied to help define what is large.

"… whenever we are using a large simple random sample (rule of thumb: n>=30), the central limit theorem enables us to conclude that the sampling distribution of the sample mean can be approximated by a normal distribution." (Essentials of Statistics for Business and Economics, Anderson, Sweeney, Williams, 2003)

"If samples of size n, when n>=30, are drawn from any population with a mean *u* and a standard deviation σ, the sampling distribution of sample means approximates a normal distribution. The greater the sample size, the better the approximation." (Elementary Statistics - Picturing the World, Larson, Farber, 2003)

"The sample size is large (generally n>=30)… (Introduction to Statistics and Data Analysis - Second Edition, Peck, Olson, Devore, 2005)

"… the normal is often used as an approximation to the *t* distribution in a test of a null hypothesis about the mean of a normally distributed population when the population variance is estimated from a relatively large sample. A sample size exceeding 30 is often given as a minimal size in this connection." (Statistical Analysis for Business Decisions, Peters, Summers, 1968)

3. Document the maintenance program activities and results for each Segment, including maintenance dates and Countable Events for each included Component.

   This requirement needs little justification. To analyze system performance, the activities and results must be documented.

4. Analyze the maintenance program activities and results for each Segment to determine the overall performance of the Segment and develop maintenance intervals.

   This requirement states the obvious for a program that is based on the performance results of the Segment.

5. Determine the maximum allowable maintenance interval for each Segment such that the Segment experiences **Countable Events** on no more than 4% of the Components within the segment, for the greater of either the last 30 Components maintained or all Components maintained in the previous year.

   The Performance Based Maintenance (PBM) program ensures no more than a 4% failure rate for each segment of a Component Type. The 4% number was developed using the following:

   - General experience of the Standard Drafting Team (SDT) based on open discussions of past performance.

- Test results provided by Consumers Energy for the years 1998-2008 showing a yearly average of 7.5% out-of-tolerance relay test results and a yearly average of 1.5% defective rate.
- Two failure analysis reports from Tennessee Valley Authority (TVA) where TVA identified problematic equipment based on a noticeably higher failure of a certain relay type (failure rate of 2.5%) and voltage transformer type (failure rate of 3.6%).

In addition to the number "30" discussion from number 2 above, the Error of Distribution formula discussed in number 1 above allows the number of Components that should be included in a sample size for evaluation of the appropriate testing interval to be smaller because a lower confidence level is acceptable since the sample testing is repeated or updated annually. For this reason, the following assumptions are made:
B = 5%
z = 1.44 (85% confidence level)
π = 4%
Using the equation above, n=31.8. The Standard Drafting Team chose to use the round number of 30.

6. At least annually, update the list of Protection System Components and Segments and/or description if any changes occur within the Segment.

   Annually was chosen as a reasonable time frame to update Component Segments due to Component installation, replacement, and retirement.

7. Perform maintenance on the greater of 5% of the components (addressed in the performance based PSMP) in each Segment or 3 individual Components within the Segment in each year.

   Note: this 5% threshold sets a practical limitation on total length of time between intervals at 20 years.

   This requirement ensures that a utility keeps a flow of recent data to use in its annual analysis. The Standard Drafting Team felt that 20 years was the maximum time that should be allowed before a Component should be checked or maintained. The minimum number of three allows for the same 20 years interval based on the minimum Segment population of 60 (60/3=20).
8. For the prior year, analyze the maintenance program activities and results for each segment to determine the overall performance of the segment.

   Annually was chosen as a reasonable time frame to allow for collection of new data to update the program's performance analysis.
9. Using the prior year's data, determine the maximum allowable maintenance interval for each Segment such that the segment experiences Countable Events on no more than 4% of the

Components within the Segment, for the greater of either the last 30 Components maintained or all components maintained in the previous year.

Refer to number 5 above.

10. If the components in a Protection System segment maintained through a performance-based PSMP experience 4% or more Countable Events, develop, document, and implement an action plan to reduce the countable events to less than 4% of the segment population within 3 years.

    The 4% number is discussed in number 5 above. Three years was chosen by the Standard Drafting Team because it allows time to modify the program and for the effects of a modified program to be observed.

Requirement R3:

R3. Each Transmission Owner, Generator Owner, and Distribution Provider that utilizes time-based maintenance programs shall maintain its Protection System Components that are included within the time-based maintenance program in accordance with the minimum maintenance activities and maximum maintenance intervals prescribed within Tables 1-1 through 1-5, Table 2, and Table 3. *[Violation Risk Factor: High] [Time Horizon: Operations Planning]*

Background and Rationale

NERC Reliability Principle 1 establishes that "Interconnected bulk power systems shall be planned and operated in a coordinated manner to perform reliably under normal and abnormal conditions as defined in the NERC Standards."

NERC Reliability Principle 7 establishes that "The reliability of the interconnected bulk power systems shall be assessed, monitored, and maintained on a wide-area basis."

The proper performance of Protection Systems is fundamental to the reliability of the Bulk Electric System (BES) as embodied in Reliability Principles 1 and 7, and proper performance of Protection Systems cannot be assured without periodic maintenance of those systems.

Therefore, Requirement R3 requires the implementation of the minimum maintenance activities and maximum allowable maintenance intervals as elucidated in Requirement R1 and the tables within the standard.

Requirement R4:

R4. Each Transmission Owner, Generator Owner, and Distribution Provider that utilizes performance-based maintenance programs in accordance with Requirement R2 shall implement and follow its PSMP for its Protection System Components that are included within the performance-based program. *[Violation Risk Factor: High] [Time Horizon: Operations Planning]*

Background and Rationale

NERC Reliability Principle 1 establishes that "Interconnected bulk power systems shall be planned and operated in a coordinated manner to perform reliably under normal and abnormal conditions as defined in the NERC Standards."

NERC Reliability Principle 7 establishes that "The reliability of the interconnected bulk power systems shall be assessed, monitored, and maintained on a wide-area basis."

The proper performance of Protection Systems is fundamental to the reliability of the Bulk Electric System (BES) as embodied in Reliability Principles 1 and 7, and proper performance of Protection Systems cannot be assured without periodic maintenance of those systems.

Therefore, Requirement R4 requires the implementation of an entity's Protection System Maintenance Program established pursuant to Requirement R2.

Requirement R5:

R5. Each Transmission Owner, Generator Owner, and Distribution Provider shall demonstrate efforts to correct identified Unresolved Maintenance Issues. *[Violation Risk Factor: Medium] [Time Horizon: Operations Planning]*

Unresolved Maintenance Issue *- A deficiency identified during a maintenance activity that causes the component to not meet the intended performance, cannot be corrected during the maintenance interval, and requires follow-up corrective action.*

Background and Rationale

The reliability objective of this requirement is to assure that Protection System Components are returned to working order following the discovery of failures or malfunctions during scheduled maintenance. The maintenance activities specified in the Tables 1-1 through 1-5, Table 2, and Table 3 do not present any requirements related to restoration; therefore Requirement R5 of the Standard was developed to require the entity to "demonstrate efforts to correct identified Unresolved Maintenance Issues".

The SDT does not believe entities should be found in violation of a maintenance program requirement because of the inability to complete a remediation program within the original maintenance interval. The SDT does believe corrective actions should be timely but concludes it would be impossible to postulate all possible remediation projects and therefore, impossible to specify bounding time frames for resolution of all possible unresolved maintenance issues or what documentation might be sufficient to provide proof that effective corrective action has been initiated. Therefore Requirement R5 requires only the entity demonstrate efforts to correct the Unresolved Maintenance Issues.

Management of completion of the identified unresolved maintenance issue is a complex topic that falls outside of the scope of this standard. There can be any number of supply, process and management problems that make setting repair deadlines impossible. The SDT specifically chose to require the entity to "demonstrate efforts to correct …" because of the concern that many more complex unresolved maintenance issues might require greater than the remaining maintenance interval to resolve. For example, a problem might be identified on a VRLA battery during a 6 month check. In instances such as one that requiring battery replacement as part of the long term resolution, it is highly unlikely that the battery could be replaced in time to meet the 6 calendar month requirement for this maintenance activity.

During the period of time that the Protection System is operating in a degraded mode, NERC Standard PRC-001-1 requires that operating entities be informed of any Protection System failures that reduce reliability, and several NERC IRO-series and TOP-series standards require that operating entities operate the system in a manner that assures reliability while recognizing any system degradation.

Technical Justification

PRC-005-2 Protection System Maintenance

The purpose of the proposed PRC-005-2 Reliability Standard is to document and implement programs for the maintenance of all Protection Systems affecting the reliability of the Bulk Electric System (BES) so that these Protection Systems are kept in working order. The proposed Reliability Standard further combines the legacy Reliability Standards PRC-005-1b, PRC-008-0, PRC-011-0, and PRC-017-0, as these legacy Reliability Standards have similar reliability goals and requirements. This purpose is consistent with NERC's goal to create and implement reliability standards that enable or support at least one of the eight, defined Reliability Principles. The requirements of the proposed PRC-005-1 Reliability Standard directly support the following Reliability Principles:

> Reliability Principle 1 – Interconnected bulk power systems shall be planned and operated in a coordinated manner to perform reliably under normal and abnormal conditions as defined in the NERC Standards.
>
> Reliability Principle 7 – The reliability of the interconnected bulk power systems shall be assessed, monitored, and maintained on a wide-area basis.

The existing PRC-005-1b, PRC-008-0, PRC-011-0, and PRC-017-0 Reliability Standards, as assessed by the NERC System Protection and Control Task Force (SPCTF) in its report of March 8, 2007, contain several fundamental flaws within the requirements. Within this assessment, the SPCTF asserts, for all four standards, that:

> *"The listed requirements do not provide clear and sufficient guidance concerning the maintenance and testing of the Protection Systems to achieve the commonly stated purpose which is "To ensure all transmission and generation Protection Systems affecting the reliability of the Bulk Electric System (BES) are maintained and tested.""*

And further recommends that:

- *"The standards should clearly state which power system elements are being addressed."*
- *"The requirements should reflect the inherent differences between different technologies of protection systems."*
- *"The terms maintenance programs and testing programs should be clearly defined in the glossary. The terms "maintenance" and "testing" are not interchangeable, and the requirements must be clear in their application. Additional terms may also have to be added to the glossary for clarity."*
- *"The requirements of the existing standards, as stated, support time-based maintenance and testing, and should be expanded to include condition-based and performance-based maintenance and testing. The R1.2 summary of maintenance and testing procedures needs to*

have some minimum defined sub-requirements to insure that the stated intent of the standards is met to support review by the compliance monitor," and

- *The SPCTF recommends that standards PRC-005-1b, PRC-008-0, PRC-011-0, and PRC-017-0 … be included in a new Standard Authorization Request for a single Protection System maintenance and testing standard.*

Relative to PRC-005-1, the Federal Energy Regulatory Commission (FERC), in Order 693 further directed in paragraph 1476:

"… the Commission directs the ERO to develop a modification to PRC–005–1 through the Reliability Standards development process that includes a requirement that maintenance and testing of a protection system must be carried out within a maximum allowable interval that is appropriate to the type of the protection system and its impact on the reliability of the Bulk-Power System. We further direct the ERO to consider FirstEnergy's and ISO–NE's suggestion to combine PRC–005–1, PRC–008–0, PRC–011–0, and PRC–017–0 into a single Reliability Standard through the Reliability Standards development process."

FERC offered, in paragraphs 1492, 1517, and 1547, similar directives regarding PRC-008-0, PRC-011-0, and PRC-017-0, respectively.

With the development of the proposed PRC-005-2 Reliability Standard, the Standard Drafting Team (SDT) for Project 2007-17 – Protection System Maintenance, has followed the observations and recommendation of the NERC SPCTF assessment of PRC-005-1, PRC-008-0, PRC-011-0, and PRC-017-0. The SDT also addressed FERC's directives from Order 693. The SDT accomplishes this by:

1. Merging the reliability objectives of the four legacy standards.
2. Establishing minimum acceptable maintenance activities and accompanying maximum allowable maintenance intervals, reflecting various technologies of the ~~components~~ Components being addressed.
3. Providing entities the flexibility to implement condition-based maintenance by adjusting the minimum acceptable maintenance activities and maximum allowable maintenance intervals to reflect condition monitoring of the various Protection System ~~components~~Components, and
4. Providing requirements for effective implementation of a performance-based maintenance program.

The proposed PRC-005-2 Reliability Standard includes five requirements that:

1. Combine~~s~~ the reliability goals of developing detailed tables of minimum maintenance activities and maximum maintenance intervals for all five ~~c~~Component ~~t~~Types addressed within the NERC definition of Protection System. These tables include adjustments to those activities and intervals to reflect the benefits of any condition monitoring that may be present.

2. Require~~s~~, within Requirement R1, that entities using a time-based maintenance program (which includes condition-based maintenance) shall establish a Protection System Maintenance Program (PSMP) that conforms to the tables described above.
3. Establish~~es~~, within Requirement R2, the opportunity and requirements for establishment of a performance-based maintenance program for those entities that have (or wish to develop) sufficient performance observations for their Protection System ~~c~~Components such that they may determine maintenance intervals other than those specified within the tables while maintaining the level of reliability prescribed within the Standard.
4. Require~~s~~, within Requirements R3 and R4, that entities fully implement their PSMP as determined pursuant to Requirement R1 for time-based maintenance programs and Requirement R2 for performance-based maintenance programs, respectively.
5. Further require~~s~~, within Requirement R5, that entities ~~initiate resolution~~demonstrate efforts to correct ~~of~~ any ~~issues~~ deficiency identified ~~discovered~~ during a maintenance interval that causes the ~~entities to be~~Component to not meet the intended performance and requires follow-up corrective action in order ~~unable~~ to return ~~the associated components~~ it to good working order. The SDT elected to not require that entities complete the resolution of these issues, as the time required to effectively resolve the problems may vary widely depending on the scope of that resolution.

The proposed PRC-005-2 Reliability Standard provides a comprehensive set of requirements and associated information (within the tables) that define a strong PSMP. Entities that monitor the actual condition of their Protection System ~~c~~Components are further empowered to utilize the monitoring to improve the efficiency and effectiveness of their PSMP, and those entities that have extensive performance data regarding their Protection System ~~c~~Components ~~to~~ can utilize that performance data to further improve the efficiency and effectiveness of their PSMP.

Requirement R1:

R1. Each Transmission Owner, Generator Owner, and Distribution Provider shall establish a Protection System Maintenance Program (PSMP) for its Protection Systems identified in Section 4.2. *[Violation Risk Factor: Medium] [Time Horizon: Operations Planning]*

The PSMP shall:

1.1. *Identify which maintenance method (time-based, performance-based (per PRC-005 Attachment A), or a combination) is used to address each Protection System component type. All batteries associated with the station dc supply component type of a Protection System shall be included in a time-based program as described in Table 1-4 and Table 3.*

1.2. *Include the applicable monitoring attributes applied to each Protection System component type consistent with the maintenance intervals specified in Tables 1-1 through 1-5, Table 2, and Table 3 where monitoring is used to extend the maintenance intervals beyond those specified for unmonitored Protection System components.*

Background and Rationale

Establishment of a Protection System Maintenance Program as directed by Requirement R1 is needed to detect and correct plausible age- and service-related degradation of Protection System components. To ensure reliability of the Bulk Electric System, it is important that a Protection System continue to function as designed over its service life.

Requirement R1 establishes that entities develop a comprehensive maintenance program for Protection System components addressing the elements specified in the Protection System Maintenance Program definition:

Protection System Maintenance Program (PSMP) — An ongoing program by which Protection System components are kept in working order and proper operation of malfunctioning components is restored. A maintenance program for a specific component includes one or more of the following activities:

- Verify — Determine that the component is functioning correctly.
- Monitor — Observe the routine in-service operation of the component.
- Test — Apply signals to a component to observe functional performance or output behavior, or to diagnose problems.
- Inspect — Examine for~~Detect visible~~ signs of component failure, reduced performance and degradation.
- Calibrate — Adjust the operating threshold or measurement accuracy of a measuring element to meet the intended performance requirement.

Maintenance and testing programs often incorporate the following types of maintenance practices:

- TBM – time-based maintenance – externally prescribed maximum maintenance or testing intervals are applied for components or groups of components. The intervals may have been developed from prior experience or manufacturers' recommendations. The TBM verification interval is based on a variety of factors, including experience of the particular asset owner, collective experiences of several asset owners who are members of a country or regional council, etc. The maintenance intervals are fixed, and may range in number of months or in years.

  TBM can include review of recent power system events near the particular terminal. Operating records may verify that some portion of the Protection System has operated correctly since the last test occurred. If specific protection scheme components have demonstrated correct performance within specifications, the maintenance test time clock can be reset for those components.

- PBM – Performance-Based Maintenance - intervals are established based on analytical or historical results of TBM failure rates on a statistically significant population of similar components. Some level of TBM is generally followed. Statistical analyses accompanied by adjustments to maintenance intervals are used to justify continued use of PBM-developed extended intervals when test failures or in-service failures occur infrequently.

- CBM – condition-based maintenance – continuously or frequently reported results from non-disruptive self monitoring of components demonstrate operational status as those components remain in service. Whatever is verified by CBM does not require manual testing, but taking advantage of this requires precise technical focus on exactly what parts are included as part of the self diagnostics. While the term "Condition-Based-Maintenance" (CBM) is no longer used within the Standard itself, it is important to note that the concepts of CBM are a part of the Standard (in the form of extended time intervals through status-monitoring). These extended time intervals are only allowed (in the absence of PBM) if the condition of the device is monitored (CBM). As a consequence of the "monitored-basis-time-intervals" existing within the Standard the explanatory discussions within this Supplementary Reference concerned with CBM will remain in this reference and are discussed as CBM.

  A key feature of condition-based monitoring is that it effectively reduces the time delay between the moment of a protection failure and time the protection system owner knows about it, for the monitored segments of the protection system. In some cases, the verification is practically continuous - the time interval between verifications is minutes or seconds. Thus, technically sound, condition-based verification, meets the directives of FERC Order 693 even more effectively than the strictly time-based tests of the same system components.

  Microprocessor based Protection System components that perform continuous self-monitoring verify correct operation of most components within the device. Self-monitoring capabilities may include battery continuity, float voltages, unintentional grounds, the ac signal inputs to a

relay, analog measuring circuits, processors and memory for measurement, protection, and data communications, trip circuit monitoring, and protection or data communications signals (and many, many more measurements). For those conditions, failure of a self-monitoring routine generates an alarm and may inhibit operation to avoid false trips. When internal components, such as critical output relay contacts, are not equipped with self-monitoring, they can be manually tested. The method of testing may be local or remote, or through inherent performance of the scheme during a system event.

TBM, PBM, and CBM can be combined for individual components, or within a complete Protection System. The following diagram illustrates the relationship between various types of maintenance practices described in this section. In the Venn diagram the overlapping regions show the relationship of TBM with PBM historical information and the inherent continuous monitoring offered through CBM.

This figure shows:

- Region 1: The TBM intervals that are increased based on known reported operational condition of individual components that are monitoring themselves.
- Region 2: The TBM intervals that are adjusted up or down based on results of analysis of maintenance history of statistically significant population of similar products that have been subject to TBM.
- Region 3: Optimal TBM intervals based on regions 1 and 2.

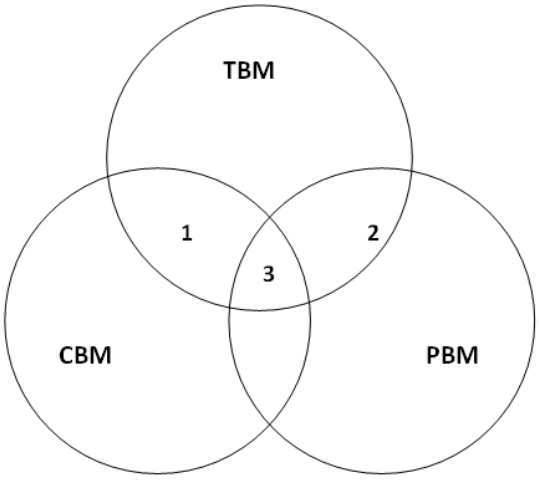

Relationship of time-based maintenance types

The PSMP shall:

R1, Part 1.1 Identify which maintenance method (time-based, performance-based ~~(~~per PRC-005 Attachment A~~)~~, or a combination) is used to address each Protection System component type.

R1, Part 1.1 gives entities the flexibility to choose between the various methods listed above to maintain their Protection System equipment.

All batteries associated with the station dc supply ~~component~~ Component ~~type~~ Type of a Protection System shall be included in a time-based program as described in Table 1-4 and Table 3.

Batteries are the only element of a Protection System that is a perishable item with a shelf life. As a perishable item batteries require not only a constant float charge to maintain their freshness (charge), but periodic inspection to determine if there are problems associated with their aging process and testing to see if they are maintaining a charge or can still deliver their rated output as required.

Besides being perishable, a second unique feature of a battery that is unlike any other Protection System element is that a battery uses chemicals, metal alloys, plastics, welds, and bonds that must interact with each other to produce the constant dc source required for Protection Systems, undisturbed by ac system disturbances.

No type of battery manufactured today for Protection System application is free from problems that can only be detected over time by inspection and test. These problems can arise from variances in the manufacturing process, chemicals and alloys used in the construction of the individual cells, quality of welds and bonds to connect the components, the plastics used to make batteries and the cell forming process for the individual battery cells.

Other problems that require periodic inspection and testing can result from transportation from the factory to the job site, length of time before a charge is put on the battery, the method of installation, the voltage level and duration of equalize charges, the float voltage level used, and the environment that the battery is installed in.

All of the above mentioned factors and several more not discussed here are beyond the control of the Functional Entities that want to use a performance-based Protection System Maintenance (PBM) program. These inherent variances in the aging process of a battery cell make establishment of a designated segment based on manufacturer and type of battery impossible.

R1, Part 1.2 **Include the applicable monitored~~ing~~ Component attributes applied to each Protection System ~~component~~ Component ~~type~~ Type consistent with the maintenance intervals specified in Tables 1-1 through 1-5, Table 2, and Table 3 where monitoring is used to extend the maintenance intervals beyond those specified for unmonitored Protection System ~~components~~Components.**

It is necessary for entities to specify the monitoring attributes utilized in their PSMP to demonstrate the existence of the monitoring elements which permit using the extended maintenance intervals established in Tables 1-1 through 1-5, Table 2, and Table 3 of the standard.

All maintenance is fundamentally time-based. Default time-based intervals are commonly established to assure proper functioning of each component of the Protection System, when data on the reliability of the components is not available other than observations from time-based maintenance. Excessive maintenance can actually decrease the reliability of the component or system. It is not unusual to cause failure of a component by removing it from service and restoring it. The improper application of test signals may cause failure of a component. Making use of the extended intervals by employing component monitoring minimizes human performance errors. The following factors may influence the established default intervals:

- If continuous indication of the functional condition of a component is available (from relays or chargers or any self monitoring device), then the intervals may be extended or manual testing may be eliminated. This is referred to as condition-based maintenance or CBM. CBM is valid only for precisely the components subject to monitoring. In the case of microprocessor-based relays, self-monitoring may not include automated diagnostics of every component within a microprocessor.
- Previous maintenance history for a group of components of a common type may indicate that the maintenance intervals can be extended while still achieving the desired level of performance. This is referred to as Performance-Based Maintenance or PBM. It is also sometimes referred to as reliability-centered maintenance or RCM, but PBM is used in this document.
- Observed proper operation of a component may be regarded as a maintenance verification of the respective component or element in a microprocessor-based device. For such an observation, the maintenance interval may be reset only to the degree that can be verified by data available on the operation. For example, the trip of an electromechanical relay for a fault verifies the trip contact and trip path, but only through the relays in series that actually operated; one operation of this relay cannot verify correct calibration.

Requirement R2:

Overview

Requirement 2, stated below, deals with Performance Based Maintenance. The requirement refers to Attachment A. Rather than simply list Attachment A, the requirements of Attachment A are listed below with a technical justification discussion for each. The criteria within Attachment A are largely based on application of statistical analysis theory.

Requirement R2

R2. Each Transmission Owner, Generator Owner, and Distribution Provider that uses performance-based maintenance intervals in its PSMP shall follow the procedure established in PRC-005 Attachment A to establish and maintain its performance-based intervals. *[Violation Risk Factor: Medium] [Time Horizon: Operations Planning]*

Background and Rationale

Performance Based Maintenance (PBM) is included in PRC-005-2 to allow utilities to adjust maintenance intervals based on their individual experience with equipment types and manufacture. The utility must create a segment of components with similar manufacture and model characteristics of statistically significant size.

> **Segment** – *Protection Systems or components of a consistent design standard, or a particular model or type from a single manufacturer that typically share other common elements. Consistent performance is expected across the entire population of a segment. A segment must contain at least sixty (60) individual components.*

Based on equipment failure(s) and out-of-tolerance(s), called ~~countable~~ Countable ~~events~~Events, in any given year, the utility then sets its maintenance interval to keep the ~~countable~~ Countable ~~events~~ Events below 4%. Performance Based Maintenance is discussed at length in Section 9.1 of the Supplemental Reference for PRC-005-2. Many of the technical justifications shown below come from of the Supplemental Reference. Each requirement of Attachment A will now be listed and individually discussed.

> **Countable Event** – *A failure of a component ~~which has failed and requires~~requiring repair or replacement, any condition discovered during the maintenance activities in Tables 1-1 through 1-5 and Table 3 which requires corrective action, or a Misoperation attributed to hardware failure or calibration failure. Misoperations due to product design errors, software errors, relay settings different from specified settings, Protection System component configuration errors, or Protection System application errors are not included in Countable Events.*

1. Develop a list with a description of ~~components~~ Components included in each designated ~~segment~~ Segment of the Protection System ~~component~~ Component population, with a minimum **segment** population of 60 ~~components~~Components.

   A sample size requirement can be

estimated using the bound on the Error of Distribution Formula when the expected result is of a "Pass/Fail" format and will be between 0 and 1.0.

The Error of Distribution Formula is:

$$B = z\sqrt{\frac{\pi(1-\pi)}{n}}$$

Where:

B = bound on the error of distribution (allowable error)

z = standard error

π = expected failure rate

n = sample size required

Solving for n provides:

$$n = \pi(1-\pi)\left(\frac{z}{B}\right)^2$$

One entity's population of components should be large enough to represent a sizeable sample of a vendor's overall population of manufactured devices. For this reason the following assumptions are made:
B = 5%
z = 1.96 (This equates to a 95% confidence level)
π = 4% (see number 5 below)
Using the equation above, n=59.0. The Standard Drafting Team chose to use the round number of 60 for the requirement.

2. Maintain the ~~components~~ Components in each ~~segment~~ Segment according to the time-based maximum allowable intervals established in Tables 1-1 through 1-5 and Table 3 until results of maintenance activities for the ~~segment~~ Segment are available for a minimum of 30 individual ~~components~~ Components of the ~~segment~~Segment.

   An assumption that needs to be made when choosing a sample size is "the sampling distribution of the sample mean can be approximated by a normal probability distribution." The Central Limit Theorem states: "In selecting simple random samples of size *n* from a population, the sampling distribution of the sample mean *x* can be approximated by a normal probability distribution as the sample size becomes large." (Essentials of Statistics for Business and Economics, Anderson, Sweeney, Williams, 2003)

To use the Central Limit Theorem in statistics, the population size should be large. The references below are supplied to help define what is large.

> "… whenever we are using a large simple random sample (rule of thumb: n>=30), the central limit theorem enables us to conclude that the sampling distribution of the sample mean can be approximated by a normal distribution." (Essentials of Statistics for Business and Economics, Anderson, Sweeney, Williams, 2003)
>
> "If samples of size n, when n>=30, are drawn from any population with a mean *u* and a standard deviation σ, the sampling distribution of sample means approximates a normal distribution. The greater the sample size, the better the approximation." (Elementary Statistics - Picturing the World, Larson, Farber, 2003)
>
> "The sample size is large (generally n>=30)… (Introduction to Statistics and Data Analysis - Second Edition, Peck, Olson, Devore, 2005)
>
> "… the normal is often used as an approximation to the *t* distribution in a test of a null hypothesis about the mean of a normally distributed population when the population variance is estimated from a relatively large sample. A sample size exceeding 30 is often given as a minimal size in this connection." (Statistical Analysis for Business Decisions, Peters, Summers, 1968)

3. Document the maintenance program activities and results for each ~~segment~~Segment, including maintenance dates and ~~countable~~ Countable ~~events~~ Events for each included ~~component~~Component.

   This requirement needs little justification. To analyze system performance, the activities and results must be documented.

4. Analyze the maintenance program activities and results for each ~~segment~~ Segment to determine the overall performance of the ~~segment~~ Segment and develop maintenance intervals.

   This requirement states the obvious for a program that is based on the performance results of the ~~segment~~Segment.

5. Determine the maximum allowable maintenance interval for each ~~segment~~ Segment such that the ~~segment~~ Segment experiences **~~countable~~ Countable ~~events~~ Events** on no more than 4% of the ~~components~~ Components within the segment, for the greater of either the last 30 ~~components~~ Components maintained or all ~~components~~ Components maintained in the previous year.

The Performance Based Maintenance (PBM) program ensures no more than a 4% failure rate for each segment of a ~~component~~ Component ~~type~~Type. The 4% number was developed using the following:

- General experience of the Standard Drafting Team (SDT) based on open discussions of past performance.
- Test results provided by Consumers Energy for the years 1998-2008 showing a yearly average of 7.5% out-of-tolerance relay test results and a yearly average of 1.5% defective rate.
- Two failure analysis reports from Tennessee Valley Authority (TVA) where TVA identified problematic equipment based on a noticeably higher failure of a certain relay type (failure rate of 2.5%) and voltage transformer type (failure rate of 3.6%).

In addition to the number "30" discussion from number 2 above, the Error of Distribution formula discussed in number 1 above allows the number of ~~c~~Components that should be included in a sample size for evaluation of the appropriate testing interval to be smaller because a lower confidence level is acceptable since the sample testing is repeated or updated annually. For this reason, the following assumptions are made:

B = 5%

z = 1.44 (85% confidence level)

π = 4%

Using the equation above, n=31.8. The Standard Drafting Team chose to use the round number of 30.

6. At least annually, update the list of Protection System ~~components~~ Components and ~~segments~~ Segments and/or description if any changes occur within the ~~segment~~Segment.

   Annually was chosen as a reasonable time frame to update ~~component~~ Component ~~segments~~ Segments due to ~~component~~ Component installation, replacement, and retirement.

7. Perform maintenance on the greater of 5% of the components (addressed in the performance based PSMP) in each ~~segment~~ Segment or 3 individual ~~components~~ Components within the ~~segment~~ Segment in each year.

   Note: this 5% threshold sets a practical limitation on total length of time between intervals at 20 years.

   This requirement ensures that a utility keeps a flow of recent data to use in its annual analysis. The Standard Drafting Team felt that 20 years was the maximum time that should be allowed before a ~~component~~ Component should be checked or maintained. The minimum number of three allows for the same 20 years interval based on the minimum ~~segment~~ Segment population of 60 (60/3=20).

8. For the prior year, analyze the maintenance program activities and results for each segment to determine the overall performance of the segment.

   Annually was chosen as a reasonable time frame to allow for collection of new data to update the program's performance analysis.
9. Using the prior year's data, determine the maximum allowable maintenance interval for each ~~segment~~ Segment such that the segment experiences ~~countable~~ Countable ~~events~~ Events on no more than 4% of the ~~components~~ Components within the ~~segment~~Segment, for the greater of either the last 30 ~~components~~ Components maintained or all components maintained in the previous year.

   Refer to number 5 above.

10. If the components in a Protection System segment maintained through a performance-based PSMP experience 4% or more ~~countable~~ Countable ~~events~~Events, develop, document, and implement an action plan to reduce the countable events to less than 4% of the segment population within 3 years.

    The 4% number is discussed in number 5 above. Three years was chosen by the Standard Drafting Team because it allows time to modify the program and for the effects of a modified program to be observed.

Requirement R3:

R3. Each Transmission Owner, Generator Owner, and Distribution Provider that utilizes time-based maintenance programs shall maintain its Protection System ~~components~~ Components that are included within the time-based maintenance program in accordance with the minimum maintenance activities and maximum maintenance intervals prescribed within Tables 1-1 through 1-5, Table 2, and Table 3. *[Violation Risk Factor: High] [Time Horizon: Operations Planning]*

Background and Rationale

NERC Reliability Principle 1 establishes that "Interconnected bulk power systems shall be planned and operated in a coordinated manner to perform reliably under normal and abnormal conditions as defined in the NERC Standards."

NERC Reliability Principle 7 establishes that "The reliability of the interconnected bulk power systems shall be assessed, monitored, and maintained on a wide-area basis."

The proper performance of Protection Systems is fundamental to the reliability of the Bulk Electric System (BES) as embodied in Reliability Principles 1 and 7, and proper performance of Protection Systems cannot be assured without periodic maintenance of those systems.

Therefore, Requirement R3 requires the implementation of the minimum maintenance activities and maximum allowable maintenance intervals as elucidated in Requirement R1 and the tables within the standard.

Requirement R4:

R4. Each Transmission Owner, Generator Owner, and Distribution Provider that utilizes performance-based maintenance programs in accordance with Requirement R2 shall implement and follow its PSMP for its Protection System ~~components~~ Components that are included within the performance-based program. *[Violation Risk Factor: High] [Time Horizon: Operations Planning]*

Background and Rationale

NERC Reliability Principle 1 establishes that "Interconnected bulk power systems shall be planned and operated in a coordinated manner to perform reliably under normal and abnormal conditions as defined in the NERC Standards."

NERC Reliability Principle 7 establishes that "The reliability of the interconnected bulk power systems shall be assessed, monitored, and maintained on a wide-area basis."

The proper performance of Protection Systems is fundamental to the reliability of the Bulk Electric System (BES) as embodied in Reliability Principles 1 and 7, and proper performance of Protection Systems cannot be assured without periodic maintenance of those systems.

Therefore, Requirement R4 requires the implementation of an entity's Protection System Maintenance Program established pursuant to Requirement R2.

Requirement R5:

R5. Each Transmission Owner, Generator Owner, and Distribution Provider shall demonstrate efforts to correct identified Unresolved Maintenance Issues. *[Violation Risk Factor: Medium] [Time Horizon: Operations Planning]*

Unresolved Maintenance Issue *- A deficiency identified during a maintenance activity that causes the component to not meet the intended performance, cannot be corrected during the maintenance interval, and requires follow-up corrective action.*

Background and Rationale

The reliability objective of this requirement is to assure that Protection System ~~c~~Components are returned to working order following the discovery of failures or malfunctions during scheduled maintenance. The maintenance activities specified in the Tables 1-1 through 1-5, Table 2, and Table 3 do not present any requirements related to restoration; therefore Requirement R5 of the Standard was developed to require the entity to "demonstrate efforts to correct identified ~~unresolved~~ Unresolved ~~maintenance~~ Maintenance ~~issues~~Issues".

The SDT does not believe entities should be found in violation of a maintenance program requirement because of the inability to complete a remediation program within the original maintenance interval. The SDT does believe corrective actions should be timely but concludes it would be impossible to postulate all possible remediation projects and therefore, impossible to specify bounding time frames for resolution of all possible unresolved maintenance issues or what documentation might be sufficient to provide proof that effective corrective action has been initiated. Therefore Requirement R5 requires only the entity demonstrate efforts to correct the ~~unresolved~~ Unresolved ~~maintenance~~ Maintenance ~~issues~~Issues.

Management of completion of the identified unresolved maintenance issue is a complex topic that falls outside of the scope of this standard. There can be any number of supply, process and management problems that make setting repair deadlines impossible. The SDT specifically chose to require the entity to "demonstrate efforts to correct …" because of the concern that many more complex unresolved maintenance issues might require greater than the remaining maintenance interval to resolve. For example, a problem might be identified on a VRLA battery during a 6 month check. In instances such as one that requiring battery replacement as part of the long term resolution, it is highly unlikely that the battery could be replaced in time to meet the 6 calendar month requirement for this maintenance activity.

During the period of time that the Protection System is operating in a degraded mode, NERC Standard PRC-001-1 requires that operating entities be informed of any Protection System failures that reduce reliability, and several NERC IRO-series and TOP-series standards require that operating entities operate the system in a manner that assures reliability while recognizing any system degradation.

NERC
NORTH AMERICAN ELECTRIC RELIABILITY CORPORATION

Project 2007-17 Protection System Maintenance and Testing Mapping Document

Mapping Document Showing Translation of PRC-005-1b – Transmission and Generation Protection System Maintenance and Testing, PRC-008-0- Implementation and Documentation of Underfrequency Load Shedding Equipment Maintenance Program, PRC-011-0 – Undervoltage Load Shedding System Maintenance and Testing, and PRC-017-0 - Special Protection System Maintenance and Testing into PRC-005-2 – Protection System Maintenance.

Standard: PRC-005-1b - Transmission and Generation Protection System Maintenance and Testing		
Requirement in Approved Standard	**Translation to New Standard or Other Action**	**Proposed Language in PRC-005-2 – Protection System Maintenance Or Comment**
R1. Each Transmission Owner and any Distribution Provider that owns a transmission Protection System and each Generator Owner that owns a generation Protection System shall have Protection System maintenance and testing program for Protection Systems that affect the reliability of the BES. The program shall include: R1.1. Maintenance and testing intervals and their basis. R1.2. Summary of maintenance and testing procedures.	PRC-005-2, R1 and PRC-005-2, R2 PRC-005-2, Tables 1-1 through 1-5, Table 2, and Table 3.	R1. Each Transmission Owner, Generator Owner, and Distribution Provider shall establish a Protection System Maintenance Program (PSMP) for its Protection Systems identified in Section 4.2. The PSMP shall: 1.1. Identify which maintenance method (time-based, performance-based per PRC-005 Attachment A, or a combination) is used to address each Protection System Component Type. All batteries associated with the station dc supply Component Type of a Protection System shall be included in a time-based program as described in Table 1-4 and Table 3. 1.2. Include the applicable monitored Component attributes applied to each Protection System Component Type consistent with the maintenance intervals specified in Tables 1-1 through 1-5, Table 2, and Table 3 where monitoring is used to extend the maintenance intervals beyond

Standard: PRC-005-1b - Transmission and Generation Protection System Maintenance and Testing		
Requirement in Approved Standard	**Translation to New Standard or Other Action**	**Proposed Language in PRC-005-2 – Protection System Maintenance Or Comment**
		those specified for unmonitored Protection System Components. R2. Each Transmission Owner, Generator Owner, and Distribution Provider that uses performance-based maintenance intervals in its PSMP shall follow the procedure established in PRC-005 Attachment A to establish and maintain its performance-based intervals. See PRC-005-2 Tables 1-1 through 1-5, Table 2, and Table 3. The Tables establish prescribed maximum intervals and minimum maintenance activities, and, as such, the entity no longer needs to establish the basis for their intervals.
R2. Each Transmission Owner and any Distribution Provider that owns a transmission Protection System and each Generator Owner that owns a generation Protection System shall provide documentation of its Protection System maintenance and testing program and the implementation of that program to its Regional Reliability Organization on request (within 30 calendar days). The documentation of the program implementation shall include: R2.1. Evidence Protection System devices were maintained and tested within	PRC-005-2, R3 PRC-005-2, R4, PRC-005-2, M3, PRC-005-2, M4 NERC Compliance Monitoring Enforcement Program Data Retention 1.3	R3. Each Transmission Owner, Generator Owner, and Distribution Provider that utilizes time-based maintenance programs shall maintain its Protection System Components that are included within the time-based maintenance program in accordance with the minimum maintenance activities and maximum maintenance intervals prescribed within Tables 1-1 through 1-5, Table 2, and Table 3. R4. Each Transmission Owner, Generator Owner, and Distribution Provider that utilizes performance-based maintenance programs in accordance with Requirement R2 shall implement and follow its PSMP for its Protection System Components that are included within the performance-based program. The legacy requirement that the entity provide the program results to the RRO and NERC on

Standard: PRC-005-1b - Transmission and Generation Protection System Maintenance and Testing		
Requirement in Approved Standard	**Translation to New Standard or Other Action**	**Proposed Language in PRC-005-2 – Protection System Maintenance Or Comment**
the defined intervals. R2.2. Date each Protection System device was last tested/maintained.		request is addressed in the NERC Compliance Monitoring Enforcement Program. M3. Each Transmission Owner, Generator Owner, and Distribution Provider that utilizes time-based maintenance programs shall have evidence that it has maintained its Protection System Components included within its time-based program in accordance with Requirement R3. The evidence may include but is not limited to dated maintenance records, dated maintenance summaries, dated check-off lists, dated inspection records, or dated work orders. M4. Each Transmission Owner, Generator Owner, and Distribution Provider that utilizes a performance-based maintenance program in accordance with Requirement R2 shall have evidence that it has implemented the Protection System Maintenance Program for the Protection System Components included in its performance-based program in accordance with Requirement R4. The evidence may include but is not limited to dated maintenance records, dated maintenance summaries, dated check-off lists, dated inspection records, or dated work orders. 1.3 Data Retention For Requirement R2, Requirement R3, Requirement R4, and Requirement R5, the Transmission Owner, Generator Owner, and Distribution Provider shall each keep documentation of the two most recent

Standard: PRC-005-1b - Transmission and Generation Protection System Maintenance and Testing		
Requirement in Approved Standard	**Translation to New Standard or Other Action**	**Proposed Language in PRC-005-2 – Protection System Maintenance Or Comment**
		performances of each distinct maintenance activity for the Protection System Components, or all performances of each distinct maintenance activity for the Protection System Component since the previous scheduled audit date, whichever is longer.

Standard: PRC-008-0 - Implementation and Documentation of Underfrequency Load Shedding Equipment Maintenance Program		
Requirement in Approved Standard	**Translation to New Standard or Other Action**	**Proposed Language in PRC-005-2 – Protection System Maintenance or Comments**
R1. The Transmission Owner and Distribution Provider with a UFLS program (as required by its Regional Reliability Organization) shall have a UFLS equipment maintenance and testing program in place. This UFLS equipment maintenance and testing program shall include UFLS equipment identification, the schedule for UFLS equipment testing, and the schedule for UFLS equipment maintenance.	PRC-005-2, R1, R2, R3, R4, and Applicability 4.2.2 Tables 1-1 – 1-5, Table 2, and Table 3	See mapping of Requirements R1 and R2 for PRC-005-1 above. 4.2 Facilities 4.2.2 Protection Systems used for Underfrequency load-shedding systems installed per ERO Underfrequency load-shedding requirements. See PRC-005-2 Tables 1-1 through 1-5, Table 2, and Table 3. The Tables establish prescribed maximum intervals and minimum maintenance activities, and, as such, the entity no longer needs to establish the basis for their intervals.
R2. The Transmission Owner and Distribution Provider with a UFLS program (as required by its Regional Reliability Organization) shall implement its UFLS equipment maintenance and testing program and shall provide UFLS maintenance and testing program results to its Regional Reliability Organization and NERC on request (within 30 calendar days).	PRC-005-2, R3, PRC-002, R4 PRC-005-2, M3, and PRC-005-2 M4 NERC Compliance Monitoring Enforcement Program	See mapping of Requirements R1 and R2 for PRC-005-1 above. The legacy requirement that the entity provide the program results to the RRO and NERC on request is addressed in the NERC Compliance Monitoring Enforcement Program.

Standard: PRC-011-0 - Undervoltage Load Shedding System Maintenance and Testing

Requirement in Approved Standard	Translation to New Standard or Other Action	Proposed Language in PRC-005-2 – Protection System Maintenance or Comments
R1. The Transmission Owner and Distribution Provider that owns a UVLS system shall have a UVLS equipment maintenance and testing program in place. This program shall include: **R1.1.** The UVLS system identification which shall include but is not limited to: **R1.1.1.** Relays. **R1.1.2.** Instrument transformers. **R1.1.3.** Communications systems, where appropriate. **R1.1.4.** Batteries. **R1.2.** Documentation of maintenance and testing intervals and their basis. **R1.3.** Summary of testing procedure. **R1.4.** Schedule for system testing. **R1.5.** Schedule for system maintenance. **R1.6.** Date last tested/maintained.	PRC-005-2, R1, PRC-005-2, R2, PRC-005-2, R3, PRC-005-2, R4, PRC-005-2 M3, PRC-005-2, M4, and PRC-005-2 Applicability 4.2.3 Tables 1-1 – 1-5, Table 2, and Table 3 Data Retention 1.3	See mapping of Requirements R1, and R2 for PRC-005-1 above. 4.2 Facilities 4.2.3 Protection Systems used for undervoltage load-shedding systems installed to prevent system voltage collapse or voltage instability for BES reliability. See PRC-005-2 Tables 1-1 through 1-5, Table 2, and Table 3. The Tables establish prescribed maximum intervals and minimum maintenance activities, and, as such, the entity no longer needs to establish the basis for their intervals. 1.3 Data Retention For Requirement R2, Requirement R3, Requirement R4, and Requirement R5, the Transmission Owner, Generator Owner, and Distribution Provider shall each keep documentation of the two most recent performances of each distinct maintenance activity for the Protection System Components, or all performances of each distinct maintenance activity for the Protection System Component since the previous scheduled audit date, whichever is longer.
R2. The Transmission Owner and Distribution Provider that owns a UVLS system shall provide documentation of its UVLS equipment maintenance	PRC-005-2, R3, PRC-002, R4 PRC-005-2, M3, and PRC-005-2	See mapping of Requirements R1 and R2 for PRC-005-1 above. The legacy requirement that the entity provide the program results to the RRO and NERC on

Standard: PRC-011-0 - Undervoltage Load Shedding System Maintenance and Testing		
Requirement in Approved Standard	**Translation to New Standard or Other Action**	**Proposed Language in PRC-005-2 – Protection System Maintenance or Comments**
and testing program and the implementation of that UVLS equipment maintenance and testing program to its Regional Reliability Organization and NERC on request (within 30 calendar days).	M4 NERC Compliance Monitoring Enforcement Program	request is addressed in the NERC Compliance Monitoring Enforcement Program

Standard: PRC-017-0 - Special Protection System Maintenance and Testing		
Requirement in Approved Standard	**Translation to New Standard or Other Action**	**Proposed Language in PRC-005-2 – Protection System Maintenance or Comments**
R1. The Transmission Owner, Generator Owner, and Distribution Provider that owns an SPS shall have a system maintenance and testing program(s) in place. The program(s) shall include: **R1.1.** SPS identification shall include but is not limited to: **R1.1.1.** Relays. **R1.1.2.** Instrument transformers. **R1.1.3.** Communications systems, where appropriate. **R1.1.4.** Batteries. **R1.2.** Documentation of maintenance and testing intervals and their basis. **R1.3.** Summary of testing procedure. **R1.4.** Schedule for system testing. **R1.5.** Schedule for system maintenance. **R1.6.** Date last tested/maintained.	PRC-005-2, R1, PRC-005-2, R2, PRC-005-2, R3, PRC-005-2, R4, PRC-005-2 M3, PRC-005-2, M4, and PRC-005-2 Applicability 4.2.4 Tables 1-1 – 1-5, and Table 2 Data Retention 1.3	See mapping of Requirements R1, and R2 for PRC-005-1 above. 4.2 Facilities 4.2.4 Protection Systems installed as a Special Protection System (SPS) for BES reliability. See PRC-005-2 Tables 1-1 through 1-5 and Table 2. The Tables establish prescribed maximum intervals and minimum maintenance activities, and, as such, the entity no longer needs to establish the basis for their intervals. 1.3 Data Retention For Requirement R2, Requirement R3, Requirement R4, and Requirement R5, the Transmission Owner, Generator Owner, and Distribution Provider shall each keep documentation of the two most recent performances of each distinct maintenance activity for the Protection System Components, or all performances of each distinct maintenance activity for the Protection System Component since the previous scheduled audit date, whichever is longer.

Standard: PRC-017-0 - Special Protection System Maintenance and Testing

Requirement in Approved Standard	Translation to New Standard or Other Action	Proposed Language in PRC-005-2 – Protection System Maintenance Or Comment
R2. The Transmission Owner, Generator Owner, and Distribution Provider that owns an SPS shall provide documentation of the program and its implementation to the appropriate Regional Reliability Organizations and NERC on request (within 30 calendar days).	PRC-005-2, R3, PRC-002, R4 PRC-005-2, M3, and PRC-005-2 M4 NERC Compliance Monitoring Enforcement Program	See mapping of Requirements R1 and R2 for PRC-005-1 above. The legacy requirement that the entity provide the program results to the RRO and NERC on request is addressed in the NERC Compliance Monitoring Enforcement Program

NERC
NORTH AMERICAN ELECTRIC RELIABILITY CORPORATION

Project 2007-17 Protection System Maintenance and Testing Mapping Document

Mapping Document Showing Translation of PRC-005-1b – Transmission and Generation Protection System Maintenance and Testing, PRC-008-0- Implementation and Documentation of Underfrequency Load Shedding Equipment Maintenance Program, PRC-011-0 – Undervoltage Load Shedding System Maintenance and Testing, and PRC-017-0 - Special Protection System Maintenance and Testing into PRC-005-2 – Protection System Maintenance.

Standard: PRC-005-1b - Transmission and Generation Protection System Maintenance and Testing		
Requirement in Approved Standard	**Translation to New Standard or Other Action**	**Proposed Language in PRC-005-2 – Protection System Maintenance Or Comment**
R1. Each Transmission Owner and any Distribution Provider that owns a transmission Protection System and each Generator Owner that owns a generation Protection System shall have Protection System maintenance and testing program for Protection Systems that affect the reliability of the BES. The program shall include: R1.1. Maintenance and testing intervals and their basis. R1.2. Summary of maintenance and testing procedures.	PRC-005-2, R1 and PRC-005-2, R2 PRC-005-2, Tables 1-1 through 1-5, Table 2, and Table 3.	R1. Each Transmission Owner, Generator Owner, and Distribution Provider shall establish a Protection System Maintenance Program (PSMP) for its Protection Systems identified in Section 4.2. The PSMP shall: 1.1. Identify which maintenance method (time-based, performance-based per PRC-005 Attachment A, or a combination) is used to address each Protection System Component Type. All batteries associated with the station dc supply Component Type of a Protection System shall be included in a time-based program as described in Table 1-4 and Table 3. 1.2. Include the applicable monitored Component attributes applied to each Protection System Component Type consistent with the maintenance intervals specified in Tables 1-1 through 1-5, Table 2, and Table 3 where monitoring is used to extend the maintenance intervals beyond

Standard: PRC-005-1b - Transmission and Generation Protection System Maintenance and Testing		
Requirement in Approved Standard	**Translation to New Standard or Other Action**	**Proposed Language in PRC-005-2 – Protection System Maintenance Or Comment**
		those specified for unmonitored Protection System Components. R2. Each Transmission Owner, Generator Owner, and Distribution Provider that uses performance-based maintenance intervals in its PSMP shall follow the procedure established in PRC-005 Attachment A to establish and maintain its performance-based intervals. See PRC-005-2 Tables 1-1 through 1-5, Table 2, and Table 3. The Tables establish prescribed maximum intervals and minimum maintenance activities, and, as such, the entity no longer needs to establish the basis for their intervals.
R2. Each Transmission Owner and any Distribution Provider that owns a transmission Protection System and each Generator Owner that owns a generation Protection System shall provide documentation of its Protection System maintenance and testing program and the implementation of that program to its Regional Reliability Organization on request (within 30 calendar days). The documentation of the program implementation shall include: R2.1. Evidence Protection System devices were maintained and tested within	PRC-005-2, R3 PRC-005-2, R4, PRC-005-2, M3, PRC-005-2, M4 NERC Compliance Monitoring Enforcement Program Data Retention 1.3	R3. Each Transmission Owner, Generator Owner, and Distribution Provider that utilizes time-based maintenance programs shall maintain its Protection System Components that are included within the time-based maintenance program in accordance with the minimum maintenance activities and maximum maintenance intervals prescribed within Tables 1-1 through 1-5, Table 2, and Table 3. R4. Each Transmission Owner, Generator Owner, and Distribution Provider that utilizes performance-based maintenance programs in accordance with Requirement R2 shall implement and follow its PSMP for its Protection System Components that are included within the performance-based program. The legacy requirement that the entity provide the program results to the RRO and NERC on

Standard: PRC-005-1b - Transmission and Generation Protection System Maintenance and Testing		
Requirement in Approved Standard	**Translation to New Standard or Other Action**	**Proposed Language in PRC-005-2 – Protection System Maintenance Or Comment**
the defined intervals. R2.2. Date each Protection System device was last tested/maintained.		request is addressed in the NERC Compliance Monitoring Enforcement Program. M3. Each Transmission Owner, Generator Owner, and Distribution Provider that utilizes time-based maintenance programs shall have evidence that it has maintained its Protection System Components included within its time-based program in accordance with Requirement R3. The evidence may include but is not limited to dated maintenance records, dated maintenance summaries, dated check-off lists, dated inspection records, or dated work orders. M4. Each Transmission Owner, Generator Owner, and Distribution Provider that utilizes a performance-based maintenance program in accordance with Requirement R2 shall have evidence that it has implemented the Protection System Maintenance Program for the Protection System Components included in its performance-based program in accordance with Requirement R4. The evidence may include but is not limited to dated maintenance records, dated maintenance summaries, dated check-off lists, dated inspection records, or dated work orders. 1.3 Data Retention For Requirement R2, Requirement R3, Requirement R4, and Requirement R5, the Transmission Owner, Generator Owner, and Distribution Provider shall each keep documentation of the two most recent

Standard: PRC-005-1b - Transmission and Generation Protection System Maintenance and Testing		
Requirement in Approved Standard	**Translation to New Standard or Other Action**	**Proposed Language in PRC-005-2 – Protection System Maintenance Or Comment**
		performances of each distinct maintenance activity for the Protection System Components, or all performances of each distinct maintenance activity for the Protection System Component since the previous scheduled audit date, whichever is longer.

Standard: PRC-008-0 - Implementation and Documentation of Underfrequency Load Shedding Equipment Maintenance Program		
Requirement in Approved Standard	**Translation to New Standard or Other Action**	**Proposed Language in PRC-005-2 – Protection System Maintenance or Comments**
R1. The Transmission Owner and Distribution Provider with a UFLS program (as required by its Regional Reliability Organization) shall have a UFLS equipment maintenance and testing program in place. This UFLS equipment maintenance and testing program shall include UFLS equipment identification, the schedule for UFLS equipment testing, and the schedule for UFLS equipment maintenance.	PRC-005-2, R1, R2, R3, R4, and Applicability 4.2.2 Tables 1-1 – 1-5, Table 2, and Table 3	See mapping of Requirements R1 and R2 for PRC-005-1 above. 4.2 Facilities 4.2.2 Protection Systems used for Underfrequency load-shedding systems installed per ERO Underfrequency load-shedding requirements. See PRC-005-2 Tables 1-1 through 1-5, Table 2, and Table 3. The Tables establish prescribed maximum intervals and minimum maintenance activities, and, as such, the entity no longer needs to establish the basis for their intervals.
R2. The Transmission Owner and Distribution Provider with a UFLS program (as required by its Regional Reliability Organization) shall implement its UFLS equipment maintenance and testing program and shall provide UFLS maintenance and testing program results to its Regional Reliability Organization and NERC on request (within 30 calendar days).	PRC-005-2, R3, PRC-002, R4 PRC-005-2, M3, and PRC-005-2 M4 NERC Compliance Monitoring Enforcement Program	See mapping of Requirements R1 and R2 for PRC-005-1 above. The legacy requirement that the entity provide the program results to the RRO and NERC on request is addressed in the NERC Compliance Monitoring Enforcement Program.

Standard: PRC-011-0 - Undervoltage Load Shedding System Maintenance and Testing		
Requirement in Approved Standard	**Translation to New Standard or Other Action**	**Proposed Language in PRC-005-2 – Protection System Maintenance or Comments**
R1. The Transmission Owner and Distribution Provider that owns a UVLS system shall have a UVLS equipment maintenance and testing program in place. This program shall include: **R1.1.** The UVLS system identification which shall include but is not limited to: **R1.1.1.** Relays. **R1.1.2.** Instrument transformers. **R1.1.3.** Communications systems, where appropriate. **R1.1.4.** Batteries. **R1.2.** Documentation of maintenance and testing intervals and their basis. **R1.3.** Summary of testing procedure. **R1.4.** Schedule for system testing. **R1.5.** Schedule for system maintenance. **R1.6.** Date last tested/maintained.	PRC-005-2, R1, PRC-005-2, R2, PRC-005-2, R3, PRC-005-2, R4, PRC-005-2 M3, PRC-005-2, M4, and PRC-005-2 Applicability 4.2.3 Tables 1-1 – 1-5, Table 2, and Table 3 Data Retention 1.3	See mapping of Requirements R1, and R2 for PRC-005-1 above. 4.2 Facilities 4.2.3 Protection Systems used for undervoltage load-shedding systems installed to prevent system voltage collapse or voltage instability for BES reliability. See PRC-005-2 Tables 1-1 through 1-5, Table 2, and Table 3. The Tables establish prescribed maximum intervals and minimum maintenance activities, and, as such, the entity no longer needs to establish the basis for their intervals. 1.3 Data Retention For Requirement R2, Requirement R3, Requirement R4, and Requirement R5, the Transmission Owner, Generator Owner, and Distribution Provider shall each keep documentation of the two most recent performances of each distinct maintenance activity for the Protection System Components, or all performances of each distinct maintenance activity for the Protection System Component since the previous scheduled audit date, whichever is longer.
R2. The Transmission Owner and Distribution Provider that owns a UVLS system shall provide documentation of its	PRC-005-2, R3, PRC-002, R4 PRC-005-2, M3,	See mapping of Requirements R1 and R2 for PRC-005-1 above. The legacy requirement that the entity provide

Standard: PRC-011-0 - Undervoltage Load Shedding System Maintenance and Testing		
Requirement in Approved Standard	**Translation to New Standard or Other Action**	**Proposed Language in PRC-005-2 – Protection System Maintenance or Comments**
UVLS equipment maintenance and testing program and the implementation of that UVLS equipment maintenance and testing program to its Regional Reliability Organization and NERC on request (within 30 calendar days).	and PRC-005-2 M4 NERC Compliance Monitoring Enforcement Program	the program results to the RRO and NERC on request is addressed in the NERC Compliance Monitoring Enforcement Program

Standard: PRC-017-0 - Special Protection System Maintenance and Testing		
Requirement in Approved Standard	**Translation to New Standard or Other Action**	**Proposed Language in PRC-005-2 – Protection System Maintenance or Comments**
R1. The Transmission Owner, Generator Owner, and Distribution Provider that owns an SPS shall have a system maintenance and testing program(s) in place. The program(s) shall include: **R1.1.** SPS identification shall include but is not limited to: **R1.1.1.** Relays. **R1.1.2.** Instrument transformers. **R1.1.3.** Communications systems, where appropriate. **R1.1.4.** Batteries. **R1.2.** Documentation of maintenance and testing intervals and their basis. **R1.3.** Summary of testing procedure. **R1.4.** Schedule for system testing. **R1.5.** Schedule for system maintenance. **R1.6.** Date last tested/maintained.	PRC-005-2, R1, PRC-005-2, R2, PRC-005-2, R3, PRC-005-2, R4, PRC-005-2 M3, PRC-005-2, M4, and PRC-005-2 Applicability 4.2.4 Tables 1-1 – 1-5, and Table 2 Data Retention 1.3	See mapping of Requirements R1, and R2 for PRC-005-1 above. 4.2 Facilities 4.2.4 Protection Systems installed as a Special Protection System (SPS) for BES reliability. See PRC-005-2 Tables 1-1 through 1-5 and Table 2. The Tables establish prescribed maximum intervals and minimum maintenance activities, and, as such, the entity no longer needs to establish the basis for their intervals. 1.3 Data Retention For Requirement R2, Requirement R3, Requirement R4, and Requirement R5, the Transmission Owner, Generator Owner, and Distribution Provider shall each keep documentation of the two most recent performances of each distinct maintenance activity for the Protection System Components, or all performances of each distinct maintenance activity for the Protection System Component since the previous scheduled audit date, whichever is longer.

Standard: PRC-017-0 - Special Protection System Maintenance and Testing		
Requirement in Approved Standard	**Translation to New Standard or Other Action**	**Proposed Language in PRC-005-2 – Protection System Maintenance Or Comment**
R2. The Transmission Owner, Generator Owner, and Distribution Provider that owns an SPS shall provide documentation of the program and its implementation to the appropriate Regional Reliability Organizations and NERC on request (within 30 calendar days).	PRC-005-2, R3, PRC-002, R4 PRC-005-2, M3, and PRC-005-2 M4 NERC Compliance Monitoring Enforcement Program	See mapping of Requirements R1 and R2 for PRC-005-1 above. The legacy requirement that the entity provide the program results to the RRO and NERC on request is addressed in the NERC Compliance Monitoring Enforcement Program

Internal Project Report

Project 2007-17
Protection System Maintenance and Testing

Issues -

Fill in the Blank Team

ISSUE: Okay if PRC-006 is fixed

"Okay if PRC-006 is fixed"

Assigned: Project 2007-17 - Protection System Maintenance and Testing

Addressed

Applicability section of PRC-005-2 (4.2.2) establishes applicability to UFLS established in accordance with ERO requirements.

Status: In Drafting Delivery: 11/7/2012

Solution Details: Applicability section of PRC-005-2 (4.2.2) establishes applicability to UFLS established in accordance with ERO requirements.

NERC Audit Observation Team

ISSUE: As applicable, each TO,DP and GOP shall have a protection system maintenance and testing program for protection systems that affect the reliability of the BES. Does this include major equipment like circuit breakers and transformers?

"As applicable, each TO,DP and GOP shall have a protection system maintenance and testing program for protection systems that affect the reliability of the BES. Does this include major equipment like circuit breakers and transformers?"

Assigned: Project 2007-17 - Protection System Maintenance and Testing

Addressed

Maintenance of Protection Systems on all BES equipment is included within this standard. See definition of Protection System.

Status: In Drafting Delivery: 11/7/2012

Solution Details: Maintenance of Protection Systems on all BES equipment is included within this standard. Circuit breakers and power transformers are not included in the definition of Protection System; instrument transformers are included within the definition. See definition of Protection System.

ISSUE: Determine what on schedule means. Is an entity who maintained/tested 95% of their relays at the same level of non-compliance as an entity who maintained/tested 10% of their relays?

"Determine what on schedule means. Is an entity who maintained/tested 95% of their relays at the same level of non-compliance as an entity who maintained/tested 10% of their relays?"

Assigned: Project 2007-17 - Protection System Maintenance and Testing

Addressed

The VSLs for maintenance program implementations (Requirements R3 and R4) establish different VSLs depending on the degree to which the program is implemented.

Status: In Drafting Delivery: 11/7/2012

Solution Details: The VSLs for maintenance program implementations (Requirements R3 and R4) have been phased such that an entity that misses only a few required activities will be at a lower VSL than entities that miss many such activities.

ISSUE: How do you verify compliance for for cts/pts? How do you audit these within a scheduled maintenance program. As part of the procedure, most have accepted visual inspection. Some entities state that testing of the relays verify functionality of the ct/pts

"How do you verify compliance for for cts/pts? How do you audit these within a scheduled maintenance program. As part of the procedure, most have accepted visual inspection. Some entities state that testing of the relays verify functionality of the ct/pts"

Assigned: Project 2007-17 - Protection System Maintenance and Testing

Addressed

Specific activities for current and voltage transformers have been defined within Table 1-3.

Status: In Drafting Delivery: 11/7/2012

Solution Details: Verification activities in Table 1-3 establish the activities required for the voltage and current sensing inputs to protective relays and associated circuitry from the voltage and current sensing devices.

ISSUE: How do you verify DC control power? All regions require functional testing of the breaker. This should include functional relay & station battery checks, including breaker tripping, not just a visual inspection.

"How do you verify DC control power? All regions require functional testing of the breaker. This should include functional relay & station battery checks, including breaker tripping, not just a visual inspection."

Assigned: Project 2007-17 - Protection System Maintenance and Testing

Addressed

Specific verification activities are established in Table 1-4.

Status: In Drafting Delivery: 11/7/2012

Solution Details: Specific activities for maintenance of dc control circuitry have been defined within Table 1-4. These activities include periodic verification of proper functioning of the dc control circuitry

Phase III/IV Team

ISSUE: All generation protection systems whose misoperations impact the bulk electric system

"All generation protection systems whose misoperations impact the bulk electric system"

Assigned: Project 2007-17 - Protection System Maintenance and Testing

Addressed

Specificity is provided in Applicability 4.2.5 addressing maintenance of Protection Systems for generator facilities.

Status: In Drafting Delivery: 11/7/2012

Solution Details: Specificity is provided in Applicability 4.2.5 addressing maintenance of Protection Systems for generator facilities.

ISSUE: All protection systems on the bulk electric system.

"All protection systems on the bulk electric system."

Assigned: Project 2007-17 - Protection System Maintenance and Testing

Addressed

The Applicabilty section of the standard defines the facilities to which the standard applies.

Status: In Drafting Delivery: 11/7/2012

Solution Details: The Applicabilty section of the standard defines the facilities to which the standard applies.

ISSUE: Modify applicability to clarfify that the requirements are applicable to the following:

"Modify applicability to clarfify that the requirements are applicable to the following:"

Assigned: Project 2007-17 - Protection System Maintenance and Testing

Addressed

The applicability section has been modified.

Status: In Drafting Delivery: 11/7/2012

Solution Details: The applicability section has been modified.

ISSUE: Need to add language to ensure the Regional Requirements focus on the most impactive scenarios

"Need to add language to ensure the Regional Requirements focus on the most impactive scenarios"

Assigned: Project 2007-17 - Protection System Maintenance and Testing

Addressed

The draft standard establishes minimim ERO-wide requirements; any Regional requirements would have to exceed the ERO requirements.

Status: In Drafting Delivery: 11/7/2012

Solution Details: The draft standard establishes minimim ERO-wide requirements; any Regional requirements would have to exceed the ERO requirements.

ISSUE: PRC 003 to 005 only address generator (and transmission) protective systems, without defining this term.

"PRC 003 to 005 only address generator (and transmission) protective systems, without defining this term."

Assigned: Project 2007-17 - Protection System Maintenance and Testing

Addressed

The applicability section addresses Protection Systems designed to provide protection for BES Element(s), and provides additional specificity regarding applicable generator Protection Systems.

Status: In Drafting Delivery: 11/7/2012

Solution Details: The applicability section addresses Protection Systems designed to provide protection for BES Element(s), and provides additional specificity regarding applicable generator Protection Systems.

ISSUE: There is no performance requirement or measure of effectiveness of a maintenance program required by the standard

"There is no performance requirement or measure of effectiveness of a maintenance program required by the standard"

Assigned: Project 2007-17 - Protection System Maintenance and Testing

Addressed

For Time-Based (or Condition-Based) maintenance, minimum activities and maximum intervals are specified; for performance-based maintenance, performance (or effectiveness) goals are established.

Status: In Drafting Delivery: 11/7/2012

Solution Details: For Time-Based (or Condition-Based) maintenance, minimum activities and maximum intervals are specified; for performance-based maintenance, performance (or effectiveness) goals are established.

Version 0 Team

ISSUE: Consistent wording from standard to standard required

"Consistent wording from standard to standard required"

Assigned: Project 2007-17 - Protection System Maintenance and Testing

Addressed

The SDT is combining the four legacy standards into one.

Status: In Drafting Delivery: 11/7/2012

Solution Details: The SDT is combining the four legacy standards into one.

ISSUE: Define evidence

"Define evidence"

Assigned: Project 2007-17 - Protection System Maintenance and Testing

Addressed

Requirements R3 and R4 state that the programs must be implemented. Evidence that the program is implemented is included in the Measures M3 and M4.

Status: In Drafting Delivery: 11/7/2012

Solution Details: Requirements R3 and R4 state that the programs must be implemented. Evidence that the program is implemented is included in the Measures M3 and M4.

ISSUE: Define evidence

"Define evidence"

Assigned: Project 2007-17 - Protection System Maintenance and Testing

Addressed

Requirements R3 and R4 state that the programs must be implemented. Evidence that the program is implemented is included in the Measures M3 and M4.

Status: In Drafting Delivery: 11/7/2012

Solution Details: Requirements R3 and R4 state that the programs must be implemented. Evidence that the program is implemented is included in the Measures M3 and M4.

ISSUE: Define evidence

"Define evidence"

Assigned: Project 2007-17 - Protection System Maintenance and Testing

Addressed

Requirements R3 and R4 state that the programs must be implemented. Evidence that the program is implemented is included in the Measures M3 and M4.

Status: In Drafting Delivery: 11/7/2012

Solution Details: Requirements R3 and R4 state that the programs must be implemented. Evidence that the program is implemented is included in the Measures M3 and M4.

ISSUE: Definition of evidence required

"Definition of evidence required"

Assigned: Project 2007-17 - Protection System Maintenance and Testing

Addressed

Requirements R3 and R4 state that the programs must be implemented. Evidence that the program is implemented is included in the Measures M3 and M4.

Status: In Drafting Delivery: 11/7/2012

Solution Details: Requirements R3 and R4 state that the programs must be implemented. Evidence that the program is implemented is included in the Measures M3 and M4.

ISSUE: Exemptions for those with shunt reactors

"Exemptions for those with shunt reactors"

Assigned: Project 2007-17 - Protection System Maintenance and Testing

Addressed

UV Relays on shunt reactors is not UVLS; these relays would be included as pertinent to relays ""applied on or to protect the BES"".

Status: In Drafting Delivery: 11/7/2012

Solution Details: UV Relays on shunt reactors is not UVLS; these relays would be included as pertinent to relays "applied on or to protect the BES".

ISSUE: Include breakers/switches in list

"Include breakers/switches in list"

Assigned: Project 2007-17 - Protection System Maintenance and Testing

Addressed

Breakers/switches are specifically NOT included in the Protection System definition, and therefore NOT addressed in the draft standard.

Status: In Drafting Delivery: 11/7/2012

Solution Details: Breakers/switches are specifically NOT included in the Protection System definition, and therefore NOT addressed in the draft standard.

ISSUE: Need to retain two dates

"Need to retain two dates"

Assigned: Project 2007-17 - Protection System Maintenance and Testing

Addressed

The Standard requires that data be retained for the last two maintenance intervals or to the last audit, whichever is longer.

Status: In Drafting Delivery: 11/7/2012

Solution Details: The Standard requires that data be retained for the last two maintenance intervals or to the last audit, whichever is longer.

FERC Staff

ISSUE: Definition of Protection System Maintenance Program (PSMP)

"Draft PRC-005-2 R3 does not address what maintenance means in the context of the standard itself. The standard only requires documentation of protection system maintenance and testing program with supporting documentation that devices were maintained and tested within the intervals defined in the process document and the date that each device was last tested and/or maintained. The ambiguity that arose was with a program that defines scheduled maintenance and testing, as opposed to just stating maintenance in general, but not unscheduled, leaving a gap in the plan"

Assigned: Project 2007-17 - Protection System Maintenance and Testing

Addressed

Definition of PSMP addresses key concerns

Status: In Drafting Delivery: 11/7/2012

Solution Details: Protection System Maintenance Program (PSMP) is defined within PRC-005-2 as "An ongoing program by which Protection System components are kept in working order and proper operation of malfunctioning components is restored." Further details are included, and this term is intended to be placed into the NERC Glossary of Terms when approved. <#CR><#LF>These concerns are otherwise beyond the scope of this standard, as reflected by the directives of FERC Order 693.<#CR><#LF>

Directives -

Mandatory Reliability Standards for the Bulk-Power System (Order 693)

DIRECTIVE: S- Ref 10351 - Maintenance and testing of a protection system must be carried out within a maximum allowable time interval that is appropriate for the type of protection system and its impact on the reliability of the bulk power system. 1

Due 4/10/2012

Para 1475

"1475. In addition, for the reasons discussed in the NOPR, the Commission directs the ERO to develop a modification to PRC-005-1 through the Reliability Standards
development process that includes a requirement that maintenance and testing of a protection system must be carried out within a maximum allowable interval that is
appropriate to the type of the protection system and its impact on the reliability of the Bulk-Power System."

Assigned: Project 2007-17 - Protection System Maintenance and Testing

Addressed

Specific maximum allowable intervals are included in the draft standard within Tables 1-1 through 1-5, and Table 2 for time-based programs.

Status: In Drafting Delivery: 2012

Solution Details: Specific maximum allowable intervals are included in the draft standard within Tables 1-1 through 1-5, and Table 2 for time-based programs. Also adding a requirement allowing performance-based maintenance intervals.

DIRECTIVE: S- Ref 10352 - Consider FirstEnergys and ISO-NEs suggestions to combine PRC-005, PRC-008, PRC-011, and PRC-017 into a single standard.

Para 1475

"Consider FirstEnergys and ISO-NEs suggestions to combine PRC-005, PRC-008, PRC-011, and PRC-017 into a single standard."

Assigned: Project 2007-17 - Protection System Maintenance and Testing

Addressed

These suggestions were adopted. The SDT is combining the four legacy standards into one.

Status: In Drafting Delivery: 2012

Solution Details: These suggestions were adopted. The SDT is combining the four legacy standards into one.

DIRECTIVE: S- Ref 10355 - Maintenance and testing of a protection system must be carried out within a maximum allowable time interval that is appropriate for the type of protection system and its impact on the reliability of the bulk power system.

Due 4/10/2012

Para 1492

"1492. In addition, the Commission directs the ERO to develop a modification to PRC-008-0 through the Reliability Standards development process that includes a requirement that maintenance and testing of a protection system must be carried out within a maximum allowable interval that is appropriate to the type of the protection system and its impact on the reliability of the Bulk-Power System."

Assigned: Project 2007-17 - Protection System Maintenance and Testing

Addressed

Specific maximum allowable intervals are included in the draft standard within Tables 1-1 through 1-5, and Table 3 for time-based programs.

Status: In Drafting Delivery: 2012

Solution Details: Specific maximum allowable intervals are included in the draft standard within Tables 1-1 through 1-5, and Table 3 for time-based programs. Also adding a requirement allowing performance-based maintenance intervals.

DIRECTIVE: S- Ref 10358 - Maintenance and testing of a protection system must be carried out within a maximum allowable time interval that is appropriate for the type of protection system and its impact on the reliability of the bulk power system.

Due 4/10/2012

Para 1516

"1516. The Commission believes that the proposal is presently part of the process. The Commission approves Reliability Standard PRC-011-0 as mandatory and enforceable. In addition, the Commission directs the ERO to submit a modification to PRC-011-0 through the Reliability Standards development process that includes a requirement that maintenance and testing of a protection system must be carried out within a maximum allowable interval that is appropriate to the type of the protection system and its impact on the reliability of the Bulk-Power System."

Assigned: Project 2007-17 - Protection System Maintenance and Testing

Addressed

Specific maximum allowable intervals are included in the draft standard within Tables 1-1 through 1-5, Table 2, and Table 3 for time-based programs.

Status: In Drafting Delivery: 2012

Solution Details: Specific maximum allowable intervals are included in the draft standard within Tables 1-1 through 1-5, Table 2, and Table 3 for time-based programs. Also adding a requirement allowing performance-based maintenance intervals.

DIRECTIVE: S- Ref 10362 - Maintenance and testing of a protection system must be carried out within a maximum allowable time interval that is appropriate for the type of protection system and its impact on the reliability of the bulk power system.

Para 1546

"Maintenance and testing of a protection system must be carried out within a maximum allowable time interval that is appropriate for the type of protection system and its impact on the reliability of the bulk power system."

Assigned: Project 2007-17 - Protection System Maintenance and Testing

Addressed

Specific maximum allowable intervals are included in the draft standard within Tables 1-1 through 1-5, and Table 2 for time-based programs. Also adding a requirement allowing performance-based maintenance intervals.

Status: In Drafting Delivery: 2012

Solution Details: Specific maximum allowable intervals are included in the draft standard within Tables 1-1 through 1-5, and Table 2 for time-based programs. Also adding a requirement allowing performance-based maintenance intervals.

NERC
NORTH AMERICAN ELECTRIC RELIABILITY CORPORATION

Project 2007-17 – PRC-005-2 Protection System Maintenance

This document provides the drafting team's justification for assignment of violation risk factors (VRFs) and violation severity levels (VSLs) for each requirement in PRC-005-2 — Protection System Maintenance.

Each primary requirement is assigned a VRF and a set of one or more VSLs. These elements support the determination of an initial value range for the Base Penalty Amount regarding violations of requirements in FERC-approved Reliability Standards, as defined in the ERO Sanction Guidelines.

The Protection System Maintenance and Testing Standard Drafting Team applied the following NERC criteria and FERC Guidelines when proposing VRFs and VSLs for the requirements under this project:

NERC Criteria - Violation Risk Factors

High Risk Requirement

A requirement that, if violated, could directly cause or contribute to bulk electric system instability, separation, or a cascading sequence of failures, or could place the bulk electric system at an unacceptable risk of instability, separation, or cascading failures; or, a requirement in a planning time frame that, if violated, could, under emergency, abnormal, or restorative conditions anticipated by the preparations, directly cause or contribute to bulk electric system instability, separation, or a cascading sequence of failures, or could place the bulk electric system at an unacceptable risk of instability, separation, or cascading failures, or could hinder restoration to a normal condition.

Medium Risk Requirement

A requirement that, if violated, could directly affect the electrical state or the capability of the bulk electric system, or the ability to effectively monitor and control the bulk electric system. However, violation of a medium risk requirement is unlikely to lead to bulk electric system instability, separation, or cascading failures; or, a requirement in a planning time frame that, if violated, could, under emergency, abnormal, or restorative conditions anticipated by the preparations, directly and adversely affect the electrical state or capability of the bulk electric system, or the ability to effectively monitor, control, or restore the bulk electric system. However, violation of a medium risk requirement is unlikely, under emergency, abnormal, or restoration conditions anticipated by the preparations, to lead to bulk electric system instability, separation, or cascading failures, nor to hinder restoration to a normal condition.

Lower Risk Requirement
A requirement that is administrative in nature and a requirement that, if violated, would not be expected to adversely affect the electrical state or capability of the bulk electric system, or the ability to effectively monitor and control the bulk electric system; or, a requirement that is administrative in nature and a requirement in a planning time frame that, if violated, would not, under the emergency, abnormal, or restorative conditions anticipated by the preparations, be expected to adversely affect the electrical state or capability of the bulk electric system, or the ability to effectively monitor, control, or restore the bulk electric system. A planning requirement that is administrative in nature.

FERC Violation Risk Factor Guidelines

Guideline (1) — Consistency with the Conclusions of the Final Blackout Report
The Commission seeks to ensure that Violation Risk Factors assigned to Requirements of Reliability Standards in these identified areas appropriately reflect their historical critical impact on the reliability of the Bulk-Power System.
In the VSL Order, FERC listed critical areas (from the Final Blackout Report) where violations could severely affect the reliability of the Bulk-Power System:

- Emergency operations
- Vegetation management
- Operator personnel training
- Protection systems and their coordination
- Operating tools and backup facilities
- Reactive power and voltage control
- System modeling and data exchange
- Communication protocol and facilities
- Requirements to determine equipment ratings
- Synchronized data recorders
- Clearer criteria for operationally critical facilities
- Appropriate use of transmission loading relief

Guideline (2) — Consistency within a Reliability Standard
The Commission expects a rational connection between the sub-Requirement Violation Risk Factor assignments and the main Requirement Violation Risk Factor assignment.

Guideline (3) — Consistency among Reliability Standards
The Commission expects the assignment of Violation Risk Factors corresponding to Requirements that address similar reliability goals in different Reliability Standards would be treated comparably.

Guideline (4) — Consistency with NERC's Definition of the Violation Risk Factor Level
Guideline (4) was developed to evaluate whether the assignment of a particular Violation Risk Factor level conforms to NERC's definition of that risk level.

Guideline (5) — Treatment of Requirements that Co-mingle More Than One Obligation
Where a single Requirement co-mingles a higher risk reliability objective and a lesser risk reliability objective, the VRF assignment for such Requirements must not be watered down to reflect the lower risk level associated with the less important objective of the Reliability Standard.

The following discussion addresses how the SDT considered FERC's VRF Guidelines 2 through 5. The team did not address Guideline 1 directly because of an apparent conflict between Guidelines 1 and 4. Whereas Guideline 1 identifies a list of topics that encompass nearly all topics within NERC's Reliability Standards and implies that these requirements should be assigned a "High" VRF, Guideline 4 directs assignment of VRFs based on the impact of a specific requirement to the reliability of the system. The SDT believes that Guideline 4 is reflective of the intent of VRFs in the first instance and therefore concentrated its approach on the reliability impact of the requirements.

PRC-005-2 Protection System Maintenance is a revision of PRC-005-1a Transmission and Generation Protection System Maintenance and Testing with the stated purpose: To document and implement programs for the maintenance of all Protection Systems affecting the reliability of the Bulk Electric System (BES) so that these Protection Systems are kept in working order. PRC-008-0 Implementation and Documentation of Underfrequency Load Shedding Equipment Maintenance Program, PRC-011-0 Undervoltage Load Shedding System Maintenance and Testing and PRC-017-0 Special Protection System Maintenance and Testing are also being replaced by merging them into PRC-005-2 in accordance with suggestions from FERC Order 693. PRC-005-2 also establishes maximum allowable maintenance intervals as directed by FERC in Order 693 in their discussion of the legacy standards PRC-005-1, PRC-008-0, PRC-011-0, and PRC-017-0.

PRC-005-2 has five (5) requirements that incorporate and enhance the intent of the requirements of PRC-005-1a, PRC-008-0, PRC-011-0, and PRC-017-0. Several Tables of minimum maintenance activities and maximum maintenance intervals are also included to addresses FERC's directives from Order 693. The revised standard requires that entities develop an appropriate Protection System Maintenance Program (PSMP), that they implement their PSMP, and that, in the event they are unable to restore Protection System Components to proper working order while performing maintenance, they initiate the follow-up activities necessary to resolve those maintenance issues.

The requirements of PRC-005-2 do not map, one-to-one, with the requirements of the legacy standards, each of which comingle various attributes addressed within the new standard; thus, a requirement-to-requirement comparison of VRFs is irrelevant. When developing VRFs for the

requirements of PRC-005-2, the Standard Drafting Team carefully considered the NERC criteria for developing VRFs, as well as the FERC VRF guidelines. Therefore, PRC-005-2 Requirements R3 and R4 are assigned a VRF of High, while Requirements R1, R2, and R5 are assigned VRFs of Medium.

PRC-005-2 Requirements R1 and R2 are related to developing and documenting a Protection System Maintenance Program. The Standard Drafting Team determined that the assignment of a VRF of Medium was consistent with the NERC criteria that violations of these requirements could directly affect the electrical state or the capability of the bulk electric system, or the ability to effectively monitor and control the bulk electric system but are unlikely to lead to bulk electric system instability, separation, or cascading failures. Additionally, a review of the body of existing NERC Standards with approved VRFs revealed that requirements with similar reliability objectives in other standards are largely assigned a VRF of Medium.

PRC-005-2 Requirements R3 and R4 are related to implementation of the Protection System Maintenance Program. The SDT determined that the assignment of a VRF of High was consistent with the NERC criteria that that violation of these requirements could directly cause or contribute to bulk electric system instability, separation, or a cascading sequence of failures, or could place the bulk electric system at an unacceptable risk of instability, separation, or cascading failures. Additionally, a review of the body of existing NERC Standards with approved VRFs revealed that requirements with similar reliability objectives in other standards are assigned a VRF of High.

PRC-005-2 Requirement R5 relates to the initiation of resolution of unresolved maintenance issues, which describe situations where an entity was unable to restore a Component to proper working order during the performance of the maintenance activity. The Standard Drafting Team determined that the assignment of a VRF of Medium was consistent with the NERC criteria that violation of this requirements could directly affect the electrical state or the capability of the bulk electric system, or the ability to effectively monitor and control the bulk electric system but are unlikely to lead to bulk electric system instability, separation, or cascading failures. Additionally, a review of the body of existing NERC Standards with approved VRFs revealed that requirements with similar reliability objectives in other standards are largely assigned a VRF of Medium.

NERC Criteria - Violation Severity Levels

Violation Severity Levels (VSLs) define the degree to which compliance with a requirement was not achieved. Each requirement must have at least one VSL. While it is preferable to have four VSLs for each requirement, some requirements do not have multiple "degrees" of noncompliant performance and may have only one, two, or three VSLs.

Violation severity levels should be based on the guidelines shown in the table below:

Lower	Moderate	High	Severe
Missing a minor element (or a small percentage) of the required performance The performance or product measured has significant value as it almost meets the full intent of the requirement.	Missing at least one significant element (or a moderate percentage) of the required performance. The performance or product measured still has significant value in meeting the intent of the requirement.	Missing more than one significant element (or is missing a high percentage) of the required performance or is missing a single vital Component. The performance or product has limited value in meeting the intent of the requirement.	Missing most or all of the significant elements (or a significant percentage) of the required performance. The performance measured does not meet the intent of the requirement or the product delivered cannot be used in meeting the intent of the requirement.

FERC Order on Violation Severity Levels

In its June 19, 2008 Order on Violation Severity Levels, FERC indicated it would use the following four guidelines for determining whether to approve VSLs:

Guideline 1: Violation Severity Level Assignments Should Not Have the Unintended Consequence of Lowering the Current Level of Compliance

- Compare the VSLs to any prior Levels of Non-compliance and avoid significant changes that may encourage a lower level of compliance than was required when Levels of Non-compliance were used.

Guideline 2: Violation Severity Level Assignments Should Ensure Uniformity and Consistency in the Determination of Penalties

- Guideline 2a: A violation of a "binary" type requirement must be a "Severe" VSL.
- Guideline 2b: Do not use ambiguous terms such as "minor" and "significant" to describe noncompliant performance.

Guideline 3: Violation Severity Level Assignment Should Be Consistent with the Corresponding Requirement

- VSLs should not expand on what is required in the requirement.

Guideline 4: Violation Severity Level Assignment Should Be Based on A Single Violation, Not on A Cumulative Number of Violations

- . . . unless otherwise stated in the requirement, each instance of non-compliance with a requirement is a separate violation. Section 4 of the Sanction Guidelines states that assessing penalties on a per violation per day basis is the "default" for penalty calculations.

VRF and VSL Justifications

VRF and VSL Justifications – PRC-005-2, R1	
Proposed VRF	**Medium**
NERC VRF Discussion	Failure to establish a Protection System Maintenance Program (PSMP) for Protection Systems designed to provide protection for BES Element(s) could directly affect the electrical state or the capability of the bulk power system. However, violation of this requirement is unlikely to lead to bulk power system instability, separation, or cascading failures. The applicable entities are always responsible for maintaining the reliability of the bulk power system regardless of the situation. This VRF emphasizes the risk to system performance that results from mal-performing Protection System Components. Failure to establish a Protection System Maintenance Program (PSMP) for Protection Systems will not, by itself, lead to instability, separation, or cascading failures. Thus, the requirement meets NERC's criteria for a Medium VRF.
FERC VRF G1 Discussion	Guideline 1- Consistency w/ Blackout Report: N/A
FERC VRF G2 Discussion	Guideline 2- Consistency within a Reliability Standard: The requirement has no sub-requirements so only one VRF was assigned. The requirement utilizes Parts to identify the items to be included within a Protection System Maintenance Program. The VRF for this requirement is consistent with others in the standard with regard to relative risk; therefore, there is no conflict.
FERC VRF G3 Discussion	Guideline 3- Consistency among Reliability Standards: The SDT has determined that there is no consistency among existing approved Standards relative to requirements of this nature. The SDT has assigned a MEDIUM VRF, which is consistent with recent FERC guidance on FAC-008-3 Requirement R2 and FAC-013-2 Requirement R1, which are similar in nature to PRC-005-2 Requirement R1.

VRF and VSL Justifications – PRC-005-2, R1	
Proposed VRF	**Medium**
FERC VRF G4 Discussion	Guideline 4- Consistency with NERC Definitions of VRFs: Failure to establish a Protection System Maintenance Program (PSMP) for Protection Systems designed to provide protection for BES Element(s) could directly affect the electrical state or the capability of the bulk power system. However, violation of this requirement is unlikely to lead to bulk power system instability, separation, or cascading failures. The applicable entities are always responsible for maintaining the reliability of the bulk power system regardless of the situation. This VRF emphasizes the risk to system performance that results from mal-performing Protection System Components. Failure to establish a Protection System Maintenance Program (PSMP) for Protection Systems will not, by itself, lead to instability, separation, or cascading failures. Thus, the requirement meets NERC's criteria for a Medium VRF..
FERC VRF G5 Discussion	Guideline 5- Treatment of Requirements that Co-mingle More than One Obligation: This requirement establishes a single risk-level, and the assigned VRF is consistent with that risk level.

Proposed VSL – PRC-005-2, R1			
Lower	**Moderate**	**High**	**Severe**
The responsible entity's PSMP failed to specify whether one Component Type is being addressed by time-based or performance-based maintenance, or a combination of both. (Part 1.1)	The responsible entity's PSMP failed to specify whether two Component Types are being addressed by time-based or performance-based maintenance, or a combination of both. (Part 1.1)	The responsible entity's PSMP failed to include the applicable monitoring attributes applied to each Protection System Component Type consistent with the maintenance intervals specified in Tables 1-1 through 1-	The responsible entity failed to establish a PSMP. OR The responsible entity failed to specify whether three or more Component Types are being

Proposed VSL – PRC-005-2, R1			
Lower	**Moderate**	**High**	**Severe**
OR The responsible entity's PSMP failed to include applicable station batteries in a time-based program (Part 1.1)		5, Table 2, and Table 3 where monitoring is used to extend the maintenance intervals beyond those specified for unmonitored Protection System Components (Part 1.2).	addressed by time-based or performance-based maintenance, or a combination of both. (Part 1.1).

VRF and VSL Justifications – PRC-005-2, R1	
NERC VSL Guidelines	Meets NERC's VSL Guidelines—There is an incremental aspect to the violation and the VSLs follow the guidelines for incremental violations.
FERC VSL G1 Violation Severity Level Assignments Should Not Have the Unintended Consequence of Lowering the Current Level of Compliance	This VSL is consistent with the current VSLs associated with the existing requirements of the standards being replaced by this proposed standard.
FERC VSL G2 Violation Severity Level Assignments Should Ensure Uniformity and Consistency in the Determination of Penalties Guideline 2a: The Single Violation Severity Level Assignment Category for "Binary" Requirements Is Not Consistent Guideline 2b: Violation Severity Level Assignments that Contain Ambiguous Language	Guideline 2a: N/A Guideline 2b: The proposed VSL does not use any ambiguous terminology, thereby supporting uniformity and consistency in the determination of similar penalties for similar violations.

VRF and VSL Justifications – PRC-005-2, R1	
FERC VSL G3 Violation Severity Level Assignment Should Be Consistent with the Corresponding Requirement	The proposed VSL uses similar terminology to that used in the associated requirement, and is therefore consistent with the requirement.
FERC VSL G4 Violation Severity Level Assignment Should Be Based on A Single Violation, Not on A Cumulative Number of Violations	The VSL is based on a single violation and not cumulative violations.

VRF and VSL Justifications – PRC-005-2, R2	
Proposed VRF	**Medium**
NERC VRF Discussion	Failure to properly establish a performance-based Protection System Maintenance Program (PSMP) for Protection Systems designed to provide protection for BES Element(s) could directly affect the electrical state or the capability of the bulk power system. However, violation of this requirement is unlikely to lead to bulk power system instability, separation, or cascading failures. The applicable entities are always responsible for maintaining the reliability of the bulk power system regardless of the situation. This VRF emphasizes the risk to system performance that results from mal-performing Protection System Components. Failure to properly establish a performance-based Protection System Maintenance Program (PSMP) for Protection Systems will not, by itself, lead to instability, separation, or cascading failures. Thus, the requirement meets NERC's criteria for a Medium VRF.
FERC VRF G1 Discussion	Guideline 1- Consistency w/ Blackout Report: N/A
FERC VRF G2 Discussion	Guideline 2- Consistency within a Reliability Standard: The requirement has no subpart(s); therefore, only one VRF was assigned and no conflict(s) exist.
FERC VRF G3 Discussion	Guideline 3- Consistency among Reliability Standards: The SDT has determined that there is no consistency among existing approved Standards relative to requirements of this nature. The SDT has assigned a MEDIUM VRF, which is consistent with recent FERC guidance on FAC-008-3 Requirement R2 and FAC-013-2 Requirement R1, which are similar in nature to PRC-005-2 Requirement R1.
FERC VRF G4 Discussion	Guideline 4- Consistency with NERC Definitions of VRFs: Failure to properly establish a performance-based Protection System Maintenance Program (PSMP) for .

VRF and VSL Justifications – PRC-005-2, R2	
Proposed VRF	**Medium**
	Protection Systems designed to provide protection for BES Element(s) could directly affect the electrical state or the capability of the bulk power system. However, violation of this requirement is unlikely to lead to bulk power system instability, separation, or cascading failures. The applicable entities are always responsible for maintaining the reliability of the bulk power system regardless of the situation. This VRF emphasizes the risk to system performance that results from mal-performing Protection System Components. Failure to properly establish a performance-based Protection System Maintenance Program (PSMP) for Protection Systems will not, by itself, lead to instability, separation, or cascading failures. Thus, the requirement meets NERC's criteria for a Medium VRF.
FERC VRF G5 Discussion	Guideline 5- Treatment of Requirements that Co-mingle More than One Obligation: This requirement establishes a single risk-level, and the assigned VRF is consistent with that risk level.

Proposed VSL – PRC-005-2, R2			
Lower	**Moderate**	**High**	**Severe**
The responsible entity uses performance-based maintenance intervals in its PSMP but failed to reduce Countable Events to no more than 4% within three years.	N/A	The responsible entity uses performance-based maintenance intervals in its PSMP but failed to reduce Countable Events to no more than 4% within four years.	The responsible entity uses performance-based maintenance intervals in its PSMP but: 1)Failed to establish the technical justification described within Requirement R2 for the initial use of the performance-based PSMP

Proposed VSL – PRC-005-2, R2			
Lower	**Moderate**	**High**	**Severe**
			OR 2) Failed to reduce countable events to no more than 4% within five years OR 3) Maintained a segment with less than 60 Components OR 4) Failed to: • Annually update the list of Components, OR • Annually perform maintenance on the greater of 5% of the segment population or 3 Components, OR • Annually analyze the program activities and results for each segment.

VRF and VSL Justifications – PRC-005-2, R2	
NERC VSL Guidelines	Meets NERC's VSL Guidelines—There is an incremental aspect to the violation and the VSLs follow the guidelines for incremental violations.
FERC VSL G1 Violation Severity Level Assignments Should Not Have the Unintended Consequence of Lowering the Current Level of Compliance	This VSL is consistent with the current VSLs associated with the existing requirements of the standards being replaced by this proposed standard.
FERC VSL G2 Violation Severity Level Assignments Should Ensure Uniformity and Consistency in the Determination of Penalties Guideline 2a: The Single Violation Severity Level Assignment Category for "Binary" Requirements Is Not Consistent	Guideline 2a: N/A Guideline 2b: The proposed VSL does not use any ambiguous terminology, thereby supporting uniformity and consistency in the determination of similar penalties for similar violations.

VRF and VSL Justifications – PRC-005-2, R2	
Guideline 2b: Violation Severity Level Assignments that Contain Ambiguous Language	
FERC VSL G3 Violation Severity Level Assignment Should Be Consistent with the Corresponding Requirement	The proposed VSL uses similar terminology to that used in the associated requirement, and is therefore consistent with the requirement.
FERC VSL G4 Violation Severity Level Assignment Should Be Based on A Single Violation, Not on A Cumulative Number of Violations	The VSL is based on a single violation and not cumulative violations.

VRF and VSL Justifications – PRC-005-2, R3	
Proposed VRF	**High**
NERC VRF Discussion	Failure to implement and follow its Protection System Maintenance Program (PSMP) could, under emergency, abnormal, or restorative conditions anticipated by the preparations, directly cause or contribute to bulk electric system instability, separation, or a cascading sequence of failures, or could place the bulk electric system at an unacceptable risk of instability, separation, or cascading failures, or could hinder restoration to a normal condition. Thus, this requirement meets the criteria for a High VRF.
FERC VRF G1 Discussion	Guideline 1- Consistency w/ Blackout Report: N/A
FERC VRF G2 Discussion	Guideline 2- Consistency within a Reliability Standard: The requirement has no subpart(s); therefore, only one VRF was assigned and no conflict(s) exist.
FERC VRF G3 Discussion	Guideline 3- Consistency among Reliability Standards: The only Reliability Standards with similar goals are those being replaced by this standard, and the High VRF assignment for this requirement is consistent with the assigned VRFs for companion requirements in those existing standards.
FERC VRF G4 Discussion	Guideline 4- Consistency with NERC Definitions of VRFs: Failure to implement and follow its Protection System Maintenance Program (PSMP) could, under emergency, abnormal, or restorative conditions anticipated by the preparations, directly cause or contribute to bulk electric system instability, separation, or a cascading sequence of failures, or could place the bulk electric system at an unacceptable risk of instability, separation, or cascading failures, or could hinder restoration to a normal condition. Thus, this requirement meets the criteria for a High VRF.
FERC VRF G5 Discussion	Guideline 5- Treatment of Requirements that Co-mingle More than One Obligation: This requirement establishes a single risk-level, and the assigned VRF is consistent with that risk level.

Proposed VSL – PRC-005-2, R3			
Lower	**Moderate**	**High**	**Severe**
For Protection System Components included within a time-based maintenance program, the responsible entity failed to maintain 5% or less of the total Components included within a specific Protection System Component Type, in accordance with the minimum maintenance activities and maximum maintenance intervals prescribed within Tables 1-1 through 1-5, Table 2, and Table 3.	For Protection System Components included within a time-based maintenance program, the responsible entity failed to maintain more than 5% but 10% or less of the total Components included within a specific Protection System Component Type, in accordance with the minimum maintenance activities and maximum maintenance intervals prescribed within Tables 1-1 through 1-5, Table 2, and Table 3.	For Protection System Components included within a time-based maintenance program, the responsible entity failed to maintain more than 10% but 15% or less of the total Components included within a specific Protection System Component Type, in accordance with the minimum maintenance activities and maximum maintenance intervals prescribed within Tables 1-1 through 1-5, Table 2, and Table 3.	For Protection System Components included within a time-based maintenance program, the responsible entity failed to maintain more than 15% of the total Components included within a specific Protection System Component Type, in accordance with the minimum maintenance activities and maximum maintenance intervals prescribed within Tables 1-1 through 1-5, Table 2, and Table 3.

VRF and VSL Justificati3ons – PRC-005-2, R3	
NERC VSL Guidelines	Meets NERC's VSL Guidelines—There is an incremental aspect to the violation and the VSLs follow the guidelines for incremental violations.
FERC VSL G1 Violation Severity Level Assignments Should Not Have the Unintended Consequence of Lowering the Current Level of Compliance	This VSL is consistent with the current VSLs associated with the existing requirements of the standards being replaced by this proposed standard.
FERC VSL G2 Violation Severity Level Assignments Should Ensure Uniformity and Consistency in the Determination of Penalties Guideline 2a: The Single Violation Severity Level Assignment Category for "Binary" Requirements Is Not Consistent Guideline 2b: Violation Severity Level Assignments that Contain Ambiguous Language	Guideline 2a: N/A Guideline 2b: The proposed VSL does not use any ambiguous terminology, thereby supporting uniformity and consistency in the determination of similar penalties for similar violations.

VRF and VSL Justifications – PRC-005-2, R3	
FERC VSL G3 Violation Severity Level Assignment Should Be Consistent with the Corresponding Requirement	The proposed VSL uses similar terminology to that used in the associated requirement, and is therefore consistent with the requirement.
FERC VSL G4 Violation Severity Level Assignment Should Be Based on A Single Violation, Not on A Cumulative Number of Violations	The VSL is based on a single violation and not cumulative violations.

VRF and VSL Justifications – PRC-005-2, R4	
Proposed VRF	**High**
NERC VRF Discussion	Failure to implement and follow its Protection System Maintenance Program (PSMP) could, under emergency, abnormal, or restorative conditions anticipated by the preparations, directly cause or contribute to bulk electric system instability, separation, or a cascading sequence of failures, or could place the bulk electric system at an unacceptable risk of instability, separation, or cascading failures, or could hinder restoration to a normal condition. Thus, this requirement meets the criteria for a High VRF.
FERC VRF G1 Discussion	Guideline 1- Consistency w/ Blackout Report: N/A
FERC VRF G2 Discussion	Guideline 2- Consistency within a Reliability Standard: The requirement has no subpart(s); therefore, only one VRF was assigned and no conflict(s) exist.
FERC VRF G3 Discussion	Guideline 3- Consistency among Reliability Standards: The only Reliability Standards with similar goals are those being replaced by this standard, and the High VRF assignment for this requirement is consistent with the assigned VRFs for companion requirements in those existing standards.
FERC VRF G4 Discussion	Guideline 4- Consistency with NERC Definitions of VRFs: Failure to implement and follow its Protection System Maintenance Program (PSMP) could, under emergency, abnormal, or restorative conditions anticipated by the preparations, directly cause or contribute to bulk electric system instability, separation, or a cascading sequence of failures, or could place the bulk electric system at an unacceptable risk of instability, separation, or cascading failures, or could hinder restoration to a normal condition. Thus, this requirement meets the criteria for a High VRF.
FERC VRF G5 Discussion	Guideline 5- Treatment of Requirements that Co-mingle More than One Obligation: This requirement establishes a single risk-level, and the assigned VRF is consistent with that risk level.

Proposed VSL – PRC-005-2, R4			
Lower	**Moderate**	**High**	**Severe**
For Protection System Components included within a performance-based maintenance program, the responsible entity failed to maintain 5% or less of the annual scheduled maintenance for a specific Protection System Component Type in accordance with their performance-based PSMP.	For Protection System Components included within a performance-based maintenance program, the responsible entity failed to maintain more than 5% but 10% or less of the annual scheduled maintenance for a specific Protection System Component Type in accordance with their performance-based PSMP.	For Protection System Components included within a performance-based maintenance program, the responsible entity failed to maintain more than 10% but 15% or less of the annual scheduled maintenance for a specific Protection System Component Type in accordance with their performance-based PSMP.	For Protection System Components included within a performance-based maintenance program, the responsible entity failed to maintain more than 15% of the annual scheduled maintenance for a specific Protection System Component Type in accordance with their performance-based PSMP.

VRF and VSL Justifications – PRC-005-2, R4	
NERC VSL Guidelines	Meets NERC's VSL Guidelines—There is an incremental aspect to the violation and the VSLs follow the guidelines for incremental violations.
FERC VSL G1 Violation Severity Level Assignments Should Not Have the Unintended Consequence of Lowering the Current Level of Compliance	This VSL is consistent with the current VSLs associated with the existing requirements of the standards being replaced by this proposed standard.
FERC VSL G2 Violation Severity Level Assignments Should Ensure Uniformity and Consistency in the Determination of Penalties Guideline 2a: The Single Violation Severity Level Assignment Category for "Binary" Requirements Is Not Consistent Guideline 2b: Violation Severity Level Assignments that Contain Ambiguous Language	Guideline 2a: N/A Guideline 2b: The proposed VSL does not use any ambiguous terminology, thereby supporting uniformity and consistency in the determination of similar penalties for similar violations.

VRF and VSL Justifications – PRC-005-2, R4	
FERC VSL G3 Violation Severity Level Assignment Should Be Consistent with the Corresponding Requirement	The proposed VSL uses similar terminology to that used in the associated requirement, and is therefore consistent with the requirement.
FERC VSL G4 Violation Severity Level Assignment Should Be Based on A Single Violation, Not on A Cumulative Number of Violations	The VSL is based on a single violation and not cumulative violations.

VRF and VSL Justifications – PRC-005-2, R5	
Proposed VRF	**Medium**
NERC VRF Discussion	Failure to initiate resolution of an unresolved maintenance issue for a Protection System Component could directly affect the electrical state or the capability of the bulk power system. However, violation of this requirement is unlikely to lead to bulk power system instability, separation, or cascading failures. The applicable entities are always responsible for maintaining the reliability of the bulk power system regardless of the situation. This VRF emphasizes the risk to system performance that results from mal-performing Protection System Components. Failure to initiate resolution of an unresolved maintenance issue for a Protection System Component will not, by itself, lead to instability, separation, or cascading failures. Thus, the requirement meets NERC's criteria for a Medium VRF.
FERC VRF G1 Discussion	Guideline 1- Consistency w/ Blackout Report: N/A
FERC VRF G2 Discussion	Guideline 2- Consistency within a Reliability Standard: The requirement has no subpart(s); therefore, only one VRF was assigned and no conflict(s) exist.
FERC VRF G3 Discussion	Guideline 3- Consistency among Reliability Standards: The only requirement within approved Standards, PRC-004-2a Requirements R1 and R2 contain a similar requirement and is assigned a HIGH VRF. However, these requirements contain several subparts, and the VRF must address the most egregious risk related to these subparts, and a comparison to these requirements may be irrelevant. PRC-022-1 Requirement R1.5 contains only a similar requirement, and is assigned a MEDIUM VRF. FAC-003-2 Requirement R5 contains only a similar requirement, and is assigned a MEDIUM VRF.
FERC VRF G4 Discussion	Guideline 4- Consistency with NERC Definitions of VRFs: Failure to initiate resolution of an unresolved maintenance issue for a Protection System Component could directly affect the electrical state or the capability of the bulk power system.

VRF and VSL Justifications – PRC-005-2, R5			
Proposed VRF	**Medium**		
	However, violation of this requirement is unlikely to lead to bulk power system instability, separation, or cascading failures. The applicable entities are always responsible for maintaining the reliability of the bulk power system regardless of the situation. This VRF emphasizes the risk to system performance that results from mal-performing Protection System Components. Failure to initiate resolution of an unresolved maintenance issue for a Protection System Component will not, by itself, lead to instability, separation, or cascading failures. Thus, the requirement meets NERC's criteria for a Medium VRF.		
FERC VRF G5 Discussion	Guideline 5- Treatment of Requirements that Co-mingle More than One Obligation: This requirement establishes a single risk-level, and the assigned VRF is consistent with that risk level.		
Proposed VSL – PRC-005-2, R5			
Lower	**Moderate**	**High**	**Severe**
The responsible entity failed to undertake efforts to correct 5 or fewer Unresolved Maintenance Issues.	The responsible entity failed to undertake efforts to correct greater than 5, but less than or equal to 10 Unresolved Maintenance Issues.	The responsible entity failed to undertake efforts to correct greater than 10, but less than or equal to 15 Unresolved Maintenance Issues.	The responsible entity failed to undertake efforts to correct greater than 15 Unresolved Maintenance Issues.

VRF and VSL Justifications – PRC-005-2, R5	
NERC VSL Guidelines	Meets NERC's VSL Guidelines—There is an incremental aspect to the violation and the VSLs follow the guidelines for incremental violations.
FERC VSL G1 Violation Severity Level Assignments Should Not Have the Unintended Consequence of Lowering the Current Level of Compliance	This is a new Requirement; consequently, there is no prior level of compliance.
FERC VSL G2 Violation Severity Level Assignments Should Ensure Uniformity and Consistency in the Determination of Penalties Guideline 2a: The Single Violation Severity Level Assignment Category for "Binary" Requirements Is Not Consistent Guideline 2b: Violation Severity Level Assignments that Contain Ambiguous Language	Guideline 2a: N/A Guideline 2b: The proposed VSL does not use any ambiguous terminology, thereby supporting uniformity and consistency in the determination of similar penalties for similar violations.

VRF and VSL Justifications – PRC-005-2, R5	
FERC VSL G3 Violation Severity Level Assignment Should Be Consistent with the Corresponding Requirement	The proposed VSL uses similar terminology to that used in the associated requirement, and is therefore consistent with the requirement.
FERC VSL G4 Violation Severity Level Assignment Should Be Based on A Single Violation, Not on A Cumulative Number of Violations	The VSL is based on a single violation and not cumulative violations.

NERC
NORTH AMERICAN ELECTRIC RELIABILITY CORPORATION

Project 2007-17 – PRC-005-2 Protection System Maintenance

This document provides the drafting team's justification for assignment of violation risk factors (VRFs) and violation severity levels (VSLs) for each requirement in PRC-005-2 — Protection System Maintenance.

Each primary requirement is assigned a VRF and a set of one or more VSLs. These elements support the determination of an initial value range for the Base Penalty Amount regarding violations of requirements in FERC-approved Reliability Standards, as defined in the ERO Sanction Guidelines.

The Protection System Maintenance and Testing Standard Drafting Team applied the following NERC criteria and FERC Guidelines when proposing VRFs and VSLs for the requirements under this project:

NERC Criteria - Violation Risk Factors

High Risk Requirement

A requirement that, if violated, could directly cause or contribute to bulk electric system instability, separation, or a cascading sequence of failures, or could place the bulk electric system at an unacceptable risk of instability, separation, or cascading failures; or, a requirement in a planning time frame that, if violated, could, under emergency, abnormal, or restorative conditions anticipated by the preparations, directly cause or contribute to bulk electric system instability, separation, or a cascading sequence of failures, or could place the bulk electric system at an unacceptable risk of instability, separation, or cascading failures, or could hinder restoration to a normal condition.

Medium Risk Requirement

A requirement that, if violated, could directly affect the electrical state or the capability of the bulk electric system, or the ability to effectively monitor and control the bulk electric system. However, violation of a medium risk requirement is unlikely to lead to bulk electric system instability, separation, or cascading failures; or, a requirement in a planning time frame that, if violated, could, under emergency, abnormal, or restorative conditions anticipated by the preparations, directly and adversely affect the electrical state or capability of the bulk electric system, or the ability to effectively monitor, control, or restore the bulk electric system. However, violation of a medium risk requirement is unlikely, under emergency, abnormal, or restoration conditions anticipated by the preparations, to lead to bulk electric system instability, separation, or cascading failures, nor to hinder restoration to a normal condition.

Lower Risk Requirement
A requirement that is administrative in nature and a requirement that, if violated, would not be expected to adversely affect the electrical state or capability of the bulk electric system, or the ability to effectively monitor and control the bulk electric system; or, a requirement that is administrative in nature and a requirement in a planning time frame that, if violated, would not, under the emergency, abnormal, or restorative conditions anticipated by the preparations, be expected to adversely affect the electrical state or capability of the bulk electric system, or the ability to effectively monitor, control, or restore the bulk electric system. A planning requirement that is administrative in nature.

FERC Violation Risk Factor Guidelines

Guideline (1) — Consistency with the Conclusions of the Final Blackout Report
The Commission seeks to ensure that Violation Risk Factors assigned to Requirements of Reliability Standards in these identified areas appropriately reflect their historical critical impact on the reliability of the Bulk-Power System.
In the VSL Order, FERC listed critical areas (from the Final Blackout Report) where violations could severely affect the reliability of the Bulk-Power System:

- Emergency operations
- Vegetation management
- Operator personnel training
- Protection systems and their coordination
- Operating tools and backup facilities
- Reactive power and voltage control
- System modeling and data exchange
- Communication protocol and facilities
- Requirements to determine equipment ratings
- Synchronized data recorders
- Clearer criteria for operationally critical facilities
- Appropriate use of transmission loading relief

Guideline (2) — Consistency within a Reliability Standard
The Commission expects a rational connection between the sub-Requirement Violation Risk Factor assignments and the main Requirement Violation Risk Factor assignment.

Guideline (3) — Consistency among Reliability Standards

The Commission expects the assignment of Violation Risk Factors corresponding to Requirements that address similar reliability goals in different Reliability Standards would be treated comparably.

Guideline (4) — Consistency with NERC's Definition of the Violation Risk Factor Level

Guideline (4) was developed to evaluate whether the assignment of a particular Violation Risk Factor level conforms to NERC's definition of that risk level.

Guideline (5) — Treatment of Requirements that Co-mingle More Than One Obligation

Where a single Requirement co-mingles a higher risk reliability objective and a lesser risk reliability objective, the VRF assignment for such Requirements must not be watered down to reflect the lower risk level associated with the less important objective of the Reliability Standard.

The following discussion addresses how the SDT considered FERC's VRF Guidelines 2 through 5. The team did not address Guideline 1 directly because of an apparent conflict between Guidelines 1 and 4. Whereas Guideline 1 identifies a list of topics that encompass nearly all topics within NERC's Reliability Standards and implies that these requirements should be assigned a "High" VRF, Guideline 4 directs assignment of VRFs based on the impact of a specific requirement to the reliability of the system. The SDT believes that Guideline 4 is reflective of the intent of VRFs in the first instance and therefore concentrated its approach on the reliability impact of the requirements.

PRC-005-2 Protection System Maintenance is a revision of PRC-005-1a Transmission and Generation Protection System Maintenance and Testing with the stated purpose: To document and implement programs for the maintenance of all Protection Systems affecting the reliability of the Bulk Electric System (BES) so that these Protection Systems are kept in working order. PRC-008-0 Implementation and Documentation of Underfrequency Load Shedding Equipment Maintenance Program, PRC-011-0 Undervoltage Load Shedding System Maintenance and Testing and PRC-017-0 Special Protection System Maintenance and Testing are also being replaced by merging them into PRC-005-2 in accordance with suggestions from FERC Order 693. PRC-005-2 also establishes maximum allowable maintenance intervals as directed by FERC in Order 693 in their discussion of the legacy standards PRC-005-1, PRC-008-0, PRC-011-0, and PRC-017-0.

PRC-005-2 has five (5) requirements that incorporate and enhance the intent of the requirements of PRC-005-1a, PRC-008-0, PRC-011-0, and PRC-017-0. Several Tables of minimum maintenance activities and maximum maintenance intervals are also included to addresses FERC's directives from Order 693. The revised standard requires that entities develop an appropriate Protection System Maintenance Program (PSMP), that they implement their PSMP, and that, in the event they are unable to restore Protection System ~~components~~Components to proper working order while performing maintenance, they initiate the follow-up activities necessary to resolve those maintenance issues.

The requirements of PRC-005-2 do not map, one-to-one, with the requirements of the legacy standards, each of which comingle various attributes addressed within the new standard; thus, a

requirement-to-requirement comparison of VRFs is irrelevant. When developing VRFs for the requirements of PRC-005-2, the Standard Drafting Team carefully considered the NERC criteria for developing VRFs, as well as the FERC VRF guidelines. Therefore, PRC-005-2 Requirements R3 and R4 are assigned a VRF of High, while Requirements R1, R2, and R5 are assigned VRFs of Medium.

PRC-005-2 Requirements R1 and R2 are related to developing and documenting a Protection System Maintenance Program. The Standard Drafting Team determined that the assignment of a VRF of Medium was consistent with the NERC criteria that violations of these requirements could directly affect the electrical state or the capability of the bulk electric system, or the ability to effectively monitor and control the bulk electric system but are unlikely to lead to bulk electric system instability, separation, or cascading failures. Additionally, a review of the body of existing NERC Standards with approved VRFs revealed that requirements with similar reliability objectives in other standards are largely assigned a VRF of Medium.

PRC-005-2 Requirements R3 and R4 are related to implementation of the Protection System Maintenance Program. The SDT determined that the assignment of a VRF of High was consistent with the NERC criteria that that violation of these requirements could directly cause or contribute to bulk electric system instability, separation, or a cascading sequence of failures, or could place the bulk electric system at an unacceptable risk of instability, separation, or cascading failures. Additionally, a review of the body of existing NERC Standards with approved VRFs revealed that requirements with similar reliability objectives in other standards are assigned a VRF of High.

PRC-005-2 Requirement R5 relates to the initiation of resolution of unresolved maintenance issues, which describe situations where an entity was unable to restore a ~~component~~Component to proper working order during the performance of the maintenance activity. The Standard Drafting Team determined that the assignment of a VRF of Medium was consistent with the NERC criteria that violation of this requirements could directly affect the electrical state or the capability of the bulk electric system, or the ability to effectively monitor and control the bulk electric system but are unlikely to lead to bulk electric system instability, separation, or cascading failures. Additionally, a review of the body of existing NERC Standards with approved VRFs revealed that requirements with similar reliability objectives in other standards are largely assigned a VRF of Medium.

NERC Criteria - Violation Severity Levels

Violation Severity Levels (VSLs) define the degree to which compliance with a requirement was not achieved. Each requirement must have at least one VSL. While it is preferable to have four VSLs for each requirement, some requirements do not have multiple "degrees" of noncompliant performance and may have only one, two, or three VSLs.

Violation severity levels should be based on the guidelines shown in the table below:

Lower	Moderate	High	Severe
Missing a minor element (or a small percentage) of the required performance The performance or product measured has significant value as it almost meets the full intent of the requirement.	Missing at least one significant element (or a moderate percentage) of the required performance. The performance or product measured still has significant value in meeting the intent of the requirement.	Missing more than one significant element (or is missing a high percentage) of the required performance or is missing a single vital ~~component~~Component. The performance or product has limited value in meeting the intent of the requirement.	Missing most or all of the significant elements (or a significant percentage) of the required performance. The performance measured does not meet the intent of the requirement or the product delivered cannot be used in meeting the intent of the requirement.

FERC Order on Violation Severity Levels

In its June 19, 2008 Order on Violation Severity Levels, FERC indicated it would use the following four guidelines for determining whether to approve VSLs:

Guideline 1: Violation Severity Level Assignments Should Not Have the Unintended Consequence of Lowering the Current Level of Compliance

- Compare the VSLs to any prior Levels of Non-compliance and avoid significant changes that may encourage a lower level of compliance than was required when Levels of Non-compliance were used.

Guideline 2: Violation Severity Level Assignments Should Ensure Uniformity and Consistency in the Determination of Penalties

- Guideline 2a: A violation of a "binary" type requirement must be a "Severe" VSL.
- Guideline 2b: Do not use ambiguous terms such as "minor" and "significant" to describe noncompliant performance.

Guideline 3: Violation Severity Level Assignment Should Be Consistent with the Corresponding Requirement

- VSLs should not expand on what is required in the requirement.

Guideline 4: Violation Severity Level Assignment Should Be Based on A Single Violation, Not on A Cumulative Number of Violations

- . . . unless otherwise stated in the requirement, each instance of non-compliance with a requirement is a separate violation. Section 4 of the Sanction Guidelines states that assessing penalties on a per violation per day basis is the "default" for penalty calculations.

VRF and VSL Justifications

VRF and VSL Justifications – PRC-005-2, R1	
Proposed VRF	**Medium**
NERC VRF Discussion	Failure to establish a Protection System Maintenance Program (PSMP) for Protection Systems designed to provide protection for BES Element(s) could directly affect the electrical state or the capability of the bulk power system. However, violation of this requirement is unlikely to lead to bulk power system instability, separation, or cascading failures. The applicable entities are always responsible for maintaining the reliability of the bulk power system regardless of the situation. This VRF emphasizes the risk to system performance that results from mal-performing Protection System Components. Failure to establish a Protection System Maintenance Program (PSMP) for Protection Systems will not, by itself, lead to instability, separation, or cascading failures. Thus, the requirement meets NERC's criteria for a Medium VRF.
FERC VRF G1 Discussion	Guideline 1- Consistency w/ Blackout Report: N/A
FERC VRF G2 Discussion	Guideline 2- Consistency within a Reliability Standard: The requirement has no sub-requirements so only one VRF was assigned. The requirement utilizes Parts to identify the items to be included within a Protection System Maintenance Program. The VRF for this requirement is consistent with others in the standard with regard to relative risk; therefore, there is no conflict.
FERC VRF G3 Discussion	Guideline 3- Consistency among Reliability Standards: The SDT has determined that there is no consistency among existing approved Standards relative to requirements of this nature. The SDT has assigned a MEDIUM VRF, which is consistent with recent FERC guidance on FAC-008-3 Requirement R2 and FAC-013-2 Requirement R1, which are similar in nature to PRC-005-2 Requirement R1.

VRF and VSL Justifications – PRC-005-2, R1	
Proposed VRF	**Medium**
FERC VRF G4 Discussion	Guideline 4- Consistency with NERC Definitions of VRFs: Failure to establish a Protection System Maintenance Program (PSMP) for Protection Systems designed to provide protection for BES Element(s) could directly affect the electrical state or the capability of the bulk power system. However, violation of this requirement is unlikely to lead to bulk power system instability, separation, or cascading failures. The applicable entities are always responsible for maintaining the reliability of the bulk power system regardless of the situation. This VRF emphasizes the risk to system performance that results from mal-performing Protection System Components. Failure to establish a Protection System Maintenance Program (PSMP) for Protection Systems will not, by itself, lead to instability, separation, or cascading failures. Thus, the requirement meets NERC's criteria for a Medium VRF..
FERC VRF G5 Discussion	Guideline 5- Treatment of Requirements that Co-mingle More than One Obligation: This requirement establishes a single risk-level, and the assigned VRF is consistent with that risk level.

Proposed VSL – PRC-005-2, R1			
Lower	**Moderate**	**High**	**Severe**
The responsible entity's PSMP failed to specify whether one ~~component type~~Component Type is being addressed by time-based or performance-based maintenance, or a combination of both. (Part 1.1)	The responsible entity's PSMP failed to specify whether two ~~component types~~Component Types are being addressed by time-based or performance-based maintenance, or a combination of both. (Part 1.1)	The responsible ~~entities'~~entity's PSMP failed to include the applicable monitoring attributes applied to each Protection System ~~component type~~Component Type consistent with the maintenance intervals specified in Tables 1-1 through 1-	The responsible entity failed to establish a PSMP. OR The responsible entity failed to specify whether three or more ~~component types~~Component Types are being

Proposed VSL – PRC-005-2, R1			
Lower	**Moderate**	**High**	**Severe**
OR The responsible entity's PSMP failed to include applicable station batteries in a time-based program (Part 1.1)		5, Table 2, and Table 3 where monitoring is used to extend the maintenance intervals beyond those specified for unmonitored Protection System ~~components~~Components (Part 1.2).	addressed by time-based or performance-based maintenance, or a combination of both. (Part 1.1).

VRF and VSL Justifications – PRC-005-2, R1	
NERC VSL Guidelines	Meets NERC's VSL Guidelines—There is an incremental aspect to the violation and the VSLs follow the guidelines for incremental violations.
FERC VSL G1 Violation Severity Level Assignments Should Not Have the Unintended Consequence of Lowering the Current Level of Compliance	This VSL is consistent with the current VSLs associated with the existing requirements of the standards being replaced by this proposed standard.
FERC VSL G2 Violation Severity Level Assignments Should Ensure Uniformity and Consistency in the Determination of Penalties Guideline 2a: The Single Violation Severity Level Assignment Category for "Binary" Requirements Is Not Consistent Guideline 2b: Violation Severity Level Assignments that Contain Ambiguous Language	Guideline 2a: N/A Guideline 2b: The proposed VSL does not use any ambiguous terminology, thereby supporting uniformity and consistency in the determination of similar penalties for similar violations.

VRF and VSL Justifications – PRC-005-2, R1	
FERC VSL G3 Violation Severity Level Assignment Should Be Consistent with the Corresponding Requirement	The proposed VSL uses similar terminology to that used in the associated requirement, and is therefore consistent with the requirement.
FERC VSL G4 Violation Severity Level Assignment Should Be Based on A Single Violation, Not on A Cumulative Number of Violations	The VSL is based on a single violation and not cumulative violations.

VRF and VSL Justifications – PRC-005-2, R2	
Proposed VRF	**Medium**
NERC VRF Discussion	Failure to properly establish a performance-based Protection System Maintenance Program (PSMP) for Protection Systems designed to provide protection for BES Element(s) could directly affect the electrical state or the capability of the bulk power system. However, violation of this requirement is unlikely to lead to bulk power system instability, separation, or cascading failures. The applicable entities are always responsible for maintaining the reliability of the bulk power system regardless of the situation. This VRF emphasizes the risk to system performance that results from mal-performing Protection System Components. Failure to properly establish a performance-based Protection System Maintenance Program (PSMP) for Protection Systems will not, by itself, lead to instability, separation, or cascading failures. Thus, the requirement meets NERC's criteria for a Medium VRF.
FERC VRF G1 Discussion	Guideline 1- Consistency w/ Blackout Report: N/A
FERC VRF G2 Discussion	Guideline 2- Consistency within a Reliability Standard: The requirement has no subpart(s); therefore, only one VRF was assigned and no conflict(s) exist.
FERC VRF G3 Discussion	Guideline 3- Consistency among Reliability Standards: The SDT has determined that there is no consistency among existing approved Standards relative to requirements of this nature. The SDT has assigned a MEDIUM VRF, which is consistent with recent FERC guidance on FAC-008-3 Requirement R2 and FAC-013-2 Requirement R1, which are similar in nature to PRC-005-2 Requirement R1.
FERC VRF G4 Discussion	Guideline 4- Consistency with NERC Definitions of VRFs: Failure to properly establish a performance-based Protection System Maintenance Program (PSMP) for .

VRF and VSL Justifications – PRC-005-2, R2	
Proposed VRF	**Medium**
	Protection Systems designed to provide protection for BES Element(s) could directly affect the electrical state or the capability of the bulk power system. However, violation of this requirement is unlikely to lead to bulk power system instability, separation, or cascading failures. The applicable entities are always responsible for maintaining the reliability of the bulk power system regardless of the situation. This VRF emphasizes the risk to system performance that results from mal-performing Protection System Components. Failure to properly establish a performance-based Protection System Maintenance Program (PSMP) for Protection Systems will not, by itself, lead to instability, separation, or cascading failures. Thus, the requirement meets NERC's criteria for a Medium VRF.
FERC VRF G5 Discussion	Guideline 5- Treatment of Requirements that Co-mingle More than One Obligation: This requirement establishes a single risk-level, and the assigned VRF is consistent with that risk level.

Proposed VSL – PRC-005-2, R2			
Lower	**Moderate**	**High**	**Severe**
The responsible entity uses performance-based maintenance intervals in its PSMP but failed to reduce ~~countable events~~Countable Events to ~~less~~no more than 4% within three years.	N/A	The responsible entity uses performance-based maintenance intervals in its PSMP but failed to reduce ~~countable events~~Countable Events to ~~less~~no more than 4% within four years.	The responsible entity uses performance-based maintenance intervals in its PSMP but: 1)Failed to establish the technical justification described within Requirement R2 for the initial use of the performance-based PSMP

Proposed VSL – PRC-005-2, R2			
Lower	**Moderate**	**High**	**Severe**
			OR 2) Failed to reduce countable events to ~~less~~no more than 4% within five years OR 3) Maintained a segment with less than 60 ~~components~~Components OR 4) Failed to: • Annually update the list of ~~components~~Components, OR • Annually perform maintenance on the greater of 5% of the segment population or 3 ~~components~~Components, OR • Annually analyze the program activities and results for each

			segment.
VRF and VSL Justifications – PRC-005-2, R2			
NERC VSL Guidelines	Meets NERC's VSL Guidelines—There is an incremental aspect to the violation and the VSLs follow the guidelines for incremental violations.		
FERC VSL G1 Violation Severity Level Assignments Should Not Have the Unintended Consequence of Lowering the Current Level of Compliance	This VSL is consistent with the current VSLs associated with the existing requirements of the standards being replaced by this proposed standard.		
FERC VSL G2 Violation Severity Level Assignments Should Ensure Uniformity and Consistency in the Determination of Penalties Guideline 2a: The Single Violation Severity Level Assignment Category for "Binary" Requirements Is Not Consistent	Guideline 2a: N/A Guideline 2b: The proposed VSL does not use any ambiguous terminology, thereby supporting uniformity and consistency in the determination of similar penalties for similar violations.		

VRF and VSL Justifications – PRC-005-2, R2	
Guideline 2b: Violation Severity Level Assignments that Contain Ambiguous Language	
FERC VSL G3 Violation Severity Level Assignment Should Be Consistent with the Corresponding Requirement	The proposed VSL uses similar terminology to that used in the associated requirement, and is therefore consistent with the requirement.
FERC VSL G4 Violation Severity Level Assignment Should Be Based on A Single Violation, Not on A Cumulative Number of Violations	The VSL is based on a single violation and not cumulative violations.

VRF and VSL Justifications – PRC-005-2, R3	
Proposed VRF	**High**
NERC VRF Discussion	Failure to implement and follow its Protection System Maintenance Program (PSMP) could, under emergency, abnormal, or restorative conditions anticipated by the preparations, directly cause or contribute to bulk electric system instability, separation, or a cascading sequence of failures, or could place the bulk electric system at an unacceptable risk of instability, separation, or cascading failures, or could hinder restoration to a normal condition. Thus, this requirement meets the criteria for a High VRF.
FERC VRF G1 Discussion	Guideline 1- Consistency w/ Blackout Report: N/A
FERC VRF G2 Discussion	Guideline 2- Consistency within a Reliability Standard: The requirement has no subpart(s); therefore, only one VRF was assigned and no conflict(s) exist.
FERC VRF G3 Discussion	Guideline 3- Consistency among Reliability Standards: The only Reliability Standards with similar goals are those being replaced by this standard, and the High VRF assignment for this requirement is consistent with the assigned VRFs for companion requirements in those existing standards.
FERC VRF G4 Discussion	Guideline 4- Consistency with NERC Definitions of VRFs: Failure to implement and follow its Protection System Maintenance Program (PSMP) could, under emergency, abnormal, or restorative conditions anticipated by the preparations, directly cause or contribute to bulk electric system instability, separation, or a cascading sequence of failures, or could place the bulk electric system at an unacceptable risk of instability, separation, or cascading failures, or could hinder restoration to a normal condition. Thus, this requirement meets the criteria for a High VRF.
FERC VRF G5 Discussion	Guideline 5- Treatment of Requirements that Co-mingle More than One Obligation: This requirement establishes a single risk-level, and the assigned VRF is consistent with that risk level.

Proposed VSL – PRC-005-2, R3			
Lower	**Moderate**	**High**	**Severe**
For Protection System ~~components~~Components included within a time-based maintenance program, the responsible entity failed to maintain 5% or less of the total ~~components~~Components included within a specific Protection System ~~component type~~Component Type, in accordance with the minimum maintenance activities and maximum maintenance intervals prescribed within Tables 1-1 through 1-5, Table 2, and Table 3.	For Protection System ~~components~~Components included within a time-based maintenance program, the responsible entity failed to maintain more than 5% but 10% or less of the total ~~components~~Components included within a specific Protection System ~~component type~~Component Type, in accordance with the minimum maintenance activities and maximum maintenance intervals prescribed within Tables 1-1 through 1-5, Table 2, and Table 3.	For Protection System ~~components~~Components included within a time-based maintenance program, the responsible entity failed to maintain more than 10% but 15% or less of the total ~~components~~Components included within a specific Protection System ~~component type~~Component Type, in accordance with the minimum maintenance activities and maximum maintenance intervals prescribed within Tables 1-1 through 1-5, Table 2, and Table 3.	For Protection System ~~components~~Components included within a time-based maintenance program, the responsible entity failed to maintain more than 15% of the total ~~components~~Components included within a specific Protection System ~~component type~~Component Type, in accordance with the minimum maintenance activities and maximum maintenance intervals prescribed within Tables 1-1 through 1-5, Table 2, and Table 3.

VRF and VSL Justificati3ons – PRC-005-2, R3	
NERC VSL Guidelines	Meets NERC's VSL Guidelines—There is an incremental aspect to the violation and the VSLs follow the guidelines for incremental violations.
FERC VSL G1 Violation Severity Level Assignments Should Not Have the Unintended Consequence of Lowering the Current Level of Compliance	This VSL is consistent with the current VSLs associated with the existing requirements of the standards being replaced by this proposed standard.
FERC VSL G2 Violation Severity Level Assignments Should Ensure Uniformity and Consistency in the Determination of Penalties Guideline 2a: The Single Violation Severity Level Assignment Category for "Binary" Requirements Is Not Consistent Guideline 2b: Violation Severity Level Assignments that Contain Ambiguous Language	Guideline 2a: N/A Guideline 2b: The proposed VSL does not use any ambiguous terminology, thereby supporting uniformity and consistency in the determination of similar penalties for similar violations.

VRF and VSL Justifications – PRC-005-2, R3	
FERC VSL G3 Violation Severity Level Assignment Should Be Consistent with the Corresponding Requirement	The proposed VSL uses similar terminology to that used in the associated requirement, and is therefore consistent with the requirement.
FERC VSL G4 Violation Severity Level Assignment Should Be Based on A Single Violation, Not on A Cumulative Number of Violations	The VSL is based on a single violation and not cumulative violations.

VRF and VSL Justifications – PRC-005-2, R4	
Proposed VRF	**High**
NERC VRF Discussion	Failure to implement and follow its Protection System Maintenance Program (PSMP) could, under emergency, abnormal, or restorative conditions anticipated by the preparations, directly cause or contribute to bulk electric system instability, separation, or a cascading sequence of failures, or could place the bulk electric system at an unacceptable risk of instability, separation, or cascading failures, or could hinder restoration to a normal condition. Thus, this requirement meets the criteria for a High VRF.
FERC VRF G1 Discussion	Guideline 1- Consistency w/ Blackout Report: N/A
FERC VRF G2 Discussion	Guideline 2- Consistency within a Reliability Standard: The requirement has no subpart(s); therefore, only one VRF was assigned and no conflict(s) exist.
FERC VRF G3 Discussion	Guideline 3- Consistency among Reliability Standards: The only Reliability Standards with similar goals are those being replaced by this standard, and the High VRF assignment for this requirement is consistent with the assigned VRFs for companion requirements in those existing standards.
FERC VRF G4 Discussion	Guideline 4- Consistency with NERC Definitions of VRFs: Failure to implement and follow its Protection System Maintenance Program (PSMP) could, under emergency, abnormal, or restorative conditions anticipated by the preparations, directly cause or contribute to bulk electric system instability, separation, or a cascading sequence of failures, or could place the bulk electric system at an unacceptable risk of instability, separation, or cascading failures, or could hinder restoration to a normal condition. Thus, this requirement meets the criteria for a High VRF.
FERC VRF G5 Discussion	Guideline 5- Treatment of Requirements that Co-mingle More than One Obligation: This requirement establishes a single risk-level, and the assigned VRF is consistent with that risk level.

Proposed VSL – PRC-005-2, R4			
Lower	**Moderate**	**High**	**Severe**
For Protection System ~~components~~Components included within a performance-based maintenance program, the responsible entity failed to maintain 5% or less of the annual scheduled maintenance for a specific Protection System ~~component type~~Component Type in accordance with their performance-based PSMP.	For Protection System ~~components~~Components included within a performance-based maintenance program, the responsible entity failed to maintain more than 5% but 10% or less of the annual scheduled maintenance for a specific Protection System ~~component type~~Component Type in accordance with their performance-based PSMP.	For Protection System ~~components~~Components included within a performance-based maintenance program, the responsible entity failed to maintain more than 10% but 15% or less of the annual scheduled maintenance for a specific Protection System ~~component type~~Component Type in accordance with their performance-based PSMP.	For Protection System ~~components~~Components included within a performance-based maintenance program, the responsible entity failed to maintain more than 15% of the annual scheduled maintenance for a specific Protection System ~~component type~~Component Type in accordance with their performance-based PSMP.

VRF and VSL Justifications – PRC-005-2, R4	
NERC VSL Guidelines	Meets NERC's VSL Guidelines—There is an incremental aspect to the violation and the VSLs follow the guidelines for incremental violations.
FERC VSL G1 Violation Severity Level Assignments Should Not Have the Unintended Consequence of Lowering the Current Level of Compliance	This VSL is consistent with the current VSLs associated with the existing requirements of the standards being replaced by this proposed standard.
FERC VSL G2 Violation Severity Level Assignments Should Ensure Uniformity and Consistency in the Determination of Penalties Guideline 2a: The Single Violation Severity Level Assignment Category for "Binary" Requirements Is Not Consistent Guideline 2b: Violation Severity Level Assignments that Contain Ambiguous Language	Guideline 2a: N/A Guideline 2b: The proposed VSL does not use any ambiguous terminology, thereby supporting uniformity and consistency in the determination of similar penalties for similar violations.

VRF and VSL Justifications – PRC-005-2, R4	
FERC VSL G3 Violation Severity Level Assignment Should Be Consistent with the Corresponding Requirement	The proposed VSL uses similar terminology to that used in the associated requirement, and is therefore consistent with the requirement.
FERC VSL G4 Violation Severity Level Assignment Should Be Based on A Single Violation, Not on A Cumulative Number of Violations	The VSL is based on a single violation and not cumulative violations.

VRF and VSL Justifications – PRC-005-2, R5	
Proposed VRF	**Medium**
NERC VRF Discussion	Failure to initiate resolution of an unresolved maintenance issue for a Protection System ~~component~~Component could directly affect the electrical state or the capability of the bulk power system. However, violation of this requirement is unlikely to lead to bulk power system instability, separation, or cascading failures. The applicable entities are always responsible for maintaining the reliability of the bulk power system regardless of the situation. This VRF emphasizes the risk to system performance that results from mal-performing Protection System Components. Failure to initiate resolution of an unresolved maintenance issue for a Protection System ~~component~~Component will not, by itself, lead to instability, separation, or cascading failures. Thus, the requirement meets NERC's criteria for a Medium VRF.
FERC VRF G1 Discussion	Guideline 1- Consistency w/ Blackout Report: N/A
FERC VRF G2 Discussion	Guideline 2- Consistency within a Reliability Standard: The requirement has no subpart(s); therefore, only one VRF was assigned and no conflict(s) exist.
FERC VRF G3 Discussion	Guideline 3- Consistency among Reliability Standards: The only requirement within approved Standards, PRC-004-2a Requirements R1 and R2 contain a similar requirement and is assigned a HIGH VRF. However, these requirements contain several subparts, and the VRF must address the most egregious risk related to these subparts, and a comparison to these requirements may be irrelevant. PRC-022-1 Requirement R1.5 contains only a similar requirement, and is assigned a MEDIUM VRF. FAC-003-2 Requirement R5 contains only a similar requirement, and is assigned a MEDIUM VRF.
FERC VRF G4 Discussion	Guideline 4- Consistency with NERC Definitions of VRFs: Failure to initiate resolution of an unresolved maintenance issue for a Protection System ~~component~~Component could directly affect the electrical state or the capability of the bulk power system.

VRF and VSL Justifications – PRC-005-2, R5			
Proposed VRF	**Medium**		
	However, violation of this requirement is unlikely to lead to bulk power system instability, separation, or cascading failures. The applicable entities are always responsible for maintaining the reliability of the bulk power system regardless of the situation. This VRF emphasizes the risk to system performance that results from mal-performing Protection System Components. Failure to initiate resolution of an unresolved maintenance issue for a Protection System ~~component~~Component will not, by itself, lead to instability, separation, or cascading failures. Thus, the requirement meets NERC's criteria for a Medium VRF.		
FERC VRF G5 Discussion	Guideline 5- Treatment of Requirements that Co-mingle More than One Obligation: This requirement establishes a single risk-level, and the assigned VRF is consistent with that risk level.		
Proposed VSL – PRC-005-2, R5			
Lower	**Moderate**	**High**	**Severe**
The responsible entity failed to undertake efforts to correct 5 or ~~less~~ fewer ~~unresolved maintenance issues~~Unresolved Maintenance Issues.	The responsible entity failed to undertake efforts to correct greater than 5, but less than or equal to 10 ~~unresolved maintenance issues.~~Unresolved Maintenance Issues.	The responsible entity failed to undertake efforts to correct greater than 10, but less than or equal to 15 ~~unresolved maintenance issues.~~Unresolved Maintenance Issues.	The responsible entity failed to undertake efforts to correct greater than 15 ~~unresolved maintenance issues~~Unresolved Maintenance Issues.

VRF and VSL Justifications – PRC-005-2, R5	
NERC VSL Guidelines	Meets NERC's VSL Guidelines—There is an incremental aspect to the violation and the VSLs follow the guidelines for incremental violations.
FERC VSL G1 Violation Severity Level Assignments Should Not Have the Unintended Consequence of Lowering the Current Level of Compliance	This is a new Requirement; consequently, there is no prior level of compliance.
FERC VSL G2 Violation Severity Level Assignments Should Ensure Uniformity and Consistency in the Determination of Penalties Guideline 2a: The Single Violation Severity Level Assignment Category for "Binary" Requirements Is Not Consistent Guideline 2b: Violation Severity Level Assignments that Contain Ambiguous Language	Guideline 2a: N/A Guideline 2b: The proposed VSL does not use any ambiguous terminology, thereby supporting uniformity and consistency in the determination of similar penalties for similar violations.

VRF and VSL Justifications – PRC-005-2, R5	
FERC VSL G3 Violation Severity Level Assignment Should Be Consistent with the Corresponding Requirement	The proposed VSL uses similar terminology to that used in the associated requirement, and is therefore consistent with the requirement.
FERC VSL G4 Violation Severity Level Assignment Should Be Based on A Single Violation, Not on A Cumulative Number of Violations	The VSL is based on a single violation and not cumulative violations.

A. Introduction

1. Title: **Transmission and Generation Protection System Maintenance and Testing**

2. Number: PRC-005-1.1b

3. Purpose: To ensure all transmission and generation Protection Systems affecting the reliability of the Bulk Electric System (BES) are maintained and tested.

4. Applicability

4.1. Transmission Owner.

4.2. Generator Owner.

4.3. Distribution Provider that owns a transmission Protection System.

5. Effective Date: In those jurisdictions where regulatory approval is required, all requirements become effective upon approval. In those jurisdictions where no regulatory approval is required, all requirements become effective upon Board of Trustee's adoption or as otherwise made effective pursuant to the laws applicable to such ERO governmental authorities.

B. Requirements

R1. Each Transmission Owner and any Distribution Provider that owns a transmission Protection System and each Generator Owner that owns a generation or generator interconnection Facility Protection System shall have a Protection System maintenance and testing program for Protection Systems that affect the reliability of the BES. The program shall include:

R1.1. Maintenance and testing intervals and their basis.

R1.2. Summary of maintenance and testing procedures.

R2. Each Transmission Owner and any Distribution Provider that owns a transmission Protection System and each Generator Owner that owns a generation or generator interconnection Facility Protection System shall provide documentation of its Protection System maintenance and testing program and the implementation of that program to its Regional Entity on request (within 30 calendar days). The documentation of the program implementation shall include:

R2.1. Evidence Protection System devices were maintained and tested within the defined intervals.

R2.2. Date each Protection System device was last tested/maintained.

C. Measures

M1. Each Transmission Owner and any Distribution Provider that owns a transmission Protection System and each Generator Owner that owns a generation or generator interconnection Facility Protection System that affects the reliability of the BES, shall have an associated Protection System maintenance and testing program as defined in Requirement 1.

M2. Each Transmission Owner and any Distribution Provider that owns a transmission Protection System and each Generator Owner that owns a generation or generator interconnection Facility Protection System that affects the reliability of the BES, shall have evidence it provided documentation of its associated Protection System maintenance and testing program and the implementation of its program as defined in Requirement 2.

D. Compliance

1. Compliance Monitoring Process

1.1. Compliance Monitoring Responsibility

Regional Entity.

1.2. Compliance Monitoring Period and Reset Time Frame

One calendar year.

1.3. Data Retention

The following evidence retention periods identify the period of time an entity is required to retain specific evidence to demonstrate compliance. For instances where the evidence retention period specified below is shorter than the time since the last audit, the Compliance Enforcement Authority may ask an entity to provide other evidence to show that it was compliant for the full time period since the last audit.

The Transmission Owner and any Distribution Provider that owns a transmission Protection System and each Generator Owner that owns a generation or generator interconnection Facility Protection System, shall retain evidence of the implementation of its Protection System maintenance and testing program for three years.

The Compliance Monitor shall retain any audit data for three years.

1.4. Additional Compliance Information

The Transmission Owner and any Distribution Provider that owns a transmission Protection System and the Generator Owner that owns a generation or generator interconnection Facility Protection System, shall each demonstrate compliance through self-certification or audit (periodic, as part of targeted monitoring or initiated by complaint or event), as determined by the Compliance Monitor.

2. Violation Severity Levels (no changes)

E. Regional Differences

None identified.

Version History

Version	Date	Action	Change Tracking
0	April 1, 2005	Effective Date	New
1	December 1, 2005	1. Changed incorrect use of certain hyphens (-) to “en dash” (–) and “em dash (—).” 2. Added “periods” to items where appropriate. 3. Changed “Timeframe” to “Time Frame” in item D, 1.2.	01/20/05
1a	February 17, 2011	Added Appendix 1 - Interpretation regarding applicability of standard to protection of radially connected	Project 2009-17 interpretation

		transformers	
1a	February 17, 2011	Adopted by Board of Trustees	
1a	September 26, 2011	FERC Order issued approving interpretation of R1 and R2 (FERC's Order is effective as of September 26, 2011)	
1.1a	February 1, 2012	Errata change: Clarified inclusion of generator interconnection Facility in Generator Owner's responsibility	Revision under Project 2010-07
1b	February 3, 2012	FERC Order issued approving interpretation of R1, R1.1, and R1.2 (FERC's Order dated March 14, 2012). Updated version from 1a to 1b.	Project 2009-10 Interpretation
1.1b	April 23, 2012	Updated standard version to 1.1b to reflect FERC approval of PRC-005-1b.	Revision under Project 2010-07
1.1b	May 9, 2012	Adopted by Board of Trustees	

Appendix 1

Requirement Number and Text of Requirement
R1. Each Transmission Owner and any Distribution Provider that owns a transmission Protection System and each Generator Owner that owns a generation Protection System shall have a Protection System maintenance and testing program for Protection Systems that affect the reliability of the BES. The program shall include: **R1.1.** Maintenance and testing intervals and their basis. **R1.2.** Summary of maintenance and testing procedures. **R2.** Each Transmission Owner and any Distribution Provider that owns a transmission Protection System and each Generator Owner that owns a generation Protection System shall provide documentation of its Protection System maintenance and testing program and the implementation of that program to its Regional Reliability Organization on request (within 30 calendar days). The documentation of the program implementation shall include: **R2.1** Evidence Protection System devices were maintained and tested within the defined intervals. **R2.2** Date each Protection System device was last tested/maintained.
Question:
Is protection for a radially-connected transformer protection system energized from the BES considered a transmission Protection System subject to this standard?
Response:
The request for interpretation of PRC-005-1 Requirements R1 and R2 focuses on the applicability of the term "transmission Protection System." The NERC Glossary of Terms Used in Reliability Standards contains a definition of "Protection System" but does not contain a definition of transmission Protection System. In these two standards, use of the phrase transmission Protection System indicates that the requirements using this phrase are applicable to any Protection System that is installed for the purpose of detecting faults on transmission elements (lines, buses, transformers, etc.) identified as being included in the Bulk Electric System (BES) and trips an interrupting device that interrupts current supplied directly from the BES. A Protection System for a radially connected transformer energized from the BES would be considered a transmission Protection System and subject to these standards only if the protection trips an interrupting device that interrupts current supplied directly from the BES and the transformer is a BES element.

Appendix 2

Requirement Number and Text of Requirement
R1. Each Transmission Owner and any Distribution Provider that owns a transmission Protection System and each Generator Owner that owns a generation Protection System shall have a Protection System maintenance and testing program for Protection Systems that affect the reliability of the BES. The program shall include: **R1.1.** Maintenance and testing intervals and their basis. **R1.2.** Summary of maintenance and testing procedures.
Question:
1. Does R1 require a maintenance and testing program for the battery chargers for the “station batteries” that are considered part of the Protection System? 2. Does R1 require a maintenance and testing program for auxiliary relays and sensing devices? If so, what types of auxiliary relays and sensing devices? (i.e transformer sudden pressure relays) 3. Does R1 require maintenance and testing of transmission line re-closing relays? 4. Does R1 require a maintenance and testing program for the DC circuitry that is just the circuitry with relays and devices that control actions on breakers, etc., or does R1 require a program for the entire circuit from the battery charger to the relays to circuit breakers and all associated wiring? 5. For R1, what are examples of "associated communications systems" that are part of “Protection Systems” that require a maintenance and testing program?
Response:
1. While battery chargers are vital for ensuring “station batteries” are available to support Protection System functions, they are not identified within the definition of “Protection Systems.” Therefore, PRC-005-1 does not require maintenance and testing of battery chargers. 2. The existing definition of “Protection System” does not include auxiliary relays; therefore, maintenance and testing of such devices is not explicitly required. Maintenance and testing of such devices is addressed to the degree that an entity’s maintenance and testing program for 3 DC control circuits involves maintenance and testing of imbedded auxiliary relays. Maintenance and testing of devices that respond to quantities other than electrical quantities (for example, sudden pressure relays) are not included within Requirement R1. 3. No. “Protective Relays” refer to devices that detect and take action for abnormal conditions. Automatic restoration of transmission lines is not a “protective” function. 4. PRC-005-1 requires that entities 1) address DC control circuitry within their program, 2) have a basis for the way they address this item, and 3) execute the program. PRC-005-1 does not establish specific additional requirements relative to the scope and/or methods included within the program. 5. “Associated communication systems” refer to communication systems used to convey essential Protection System tripping logic, sometimes referred to as pilot relaying or teleprotection. Examples include the following: • communications equipment involved in power-line-carrier relaying • communications equipment involved in various types of permissive protection system

applications

- direct transfer-trip systems
- digital communication systems (which would include the protection system communications functions of standard IEC 618501 as well as various proprietary systems)

A. Introduction

1. Title: **Implementation and Documentation of Underfrequency Load Shedding Equipment Maintenance Program**

2. Number: PRC-008-0

3. Purpose: Provide last resort system preservation measures by implementing an Under Frequency Load Shedding (UFLS) program.

4. Applicability:

4.1. Transmission Owner required by its Regional Reliability Organization to have a UFLS program

4.2. Distribution Provider required by its Regional Reliability Organization to have a UFLS program

5. Effective Date: April 1, 2005

B. Requirements

R1. The Transmission Owner and Distribution Provider with a UFLS program (as required by its Regional Reliability Organization) shall have a UFLS equipment maintenance and testing program in place. This UFLS equipment maintenance and testing program shall include UFLS equipment identification, the schedule for UFLS equipment testing, and the schedule for UFLS equipment maintenance.

R2. The Transmission Owner and Distribution Provider with a UFLS program (as required by its Regional Reliability Organization) shall implement its UFLS equipment maintenance and testing program and shall provide UFLS maintenance and testing program results to its Regional Reliability Organization and NERC on request (within 30 calendar days).

C. Measures

M1. Each Transmission Owner's and Distribution Provider's UFLS equipment maintenance and testing program contains the elements specified in Reliability Standard PRC-007-0_R1.

M2. Each Transmission Owner and Distribution Provider shall have evidence that it provided the results of its UFLS equipment maintenance and testing program's implementation to its Regional Reliability Organization and NERC on request (within 30 calendar days).

D. Compliance

1. Compliance Monitoring Process

1.1. Compliance Monitoring Responsibility

Compliance Monitor: Regional Reliability Organization.

1.2. Compliance Monitoring Period and Reset Timeframe

On request (within 30 calendar days).

1.3. Data Retention

None specified.

1.4. Additional Compliance Information

None.

2. Levels of Non-Compliance

2.1. Level 1: Documentation of the maintenance and testing program was incomplete, but records indicate implementation was on schedule.

2.2. Level 2: Complete documentation of the maintenance and testing program was provided, but records indicate that implementation was not on schedule.

2.3. Level 3: Documentation of the maintenance and testing program was incomplete, and records indicate implementation was not on schedule.

2.4. Level 4: Documentation of the maintenance and testing program, or its implementation was not provided.

E. Regional Differences

1. None identified.

Version History

Version	Date	Action	Change Tracking
0	April 1, 2005	Effective Date	New

A. Introduction

1. Title: **Undervoltage Load Shedding System Maintenance and Testing**

2. Number: PRC-011-0

3. Purpose: Provide system preservation measures in an attempt to prevent system voltage collapse or voltage instability by implementing an Undervoltage Load Shedding (UVLS) program.

4. Applicability:

4.1. Transmission Owner that owns a UVLS system

4.2. Distribution Provider that owns a UVLS system

5. Effective Date: April 1, 2005

B. Requirements

R1. The Transmission Owner and Distribution Provider that owns a UVLS system shall have a UVLS equipment maintenance and testing program in place. This program shall include:

R1.1. The UVLS system identification which shall include but is not limited to:

R1.1.1. Relays.

R1.1.2. Instrument transformers.

R1.1.3. Communications systems, where appropriate.

R1.1.4. Batteries.

R1.2. Documentation of maintenance and testing intervals and their basis.

R1.3. Summary of testing procedure.

R1.4. Schedule for system testing.

R1.5. Schedule for system maintenance.

R1.6. Date last tested/maintained.

R2. The Transmission Owner and Distribution Provider that owns a UVLS system shall provide documentation of its UVLS equipment maintenance and testing program and the implementation of that UVLS equipment maintenance and testing program to its Regional Reliability Organization and NERC on request (within 30 calendar days).

C. Measures

M1. Each Transmission Owner and Distribution Provider that owns a UVLS system shall have documentation that its UVLS equipment maintenance and testing program conforms with Reliability Standard PRC-011-0_R1.

M2. Each Transmission Owner and Distribution Provider that owns a UVLS system shall have evidence it provided documentation of its UVLS equipment maintenance and testing program and the implementation of that UVLS equipment maintenance and testing program as specified in Reliability Standard PRC-011-0_R2.

D. Compliance

1. Compliance Monitoring Process

1.1. Compliance Monitoring Responsibility

Compliance Monitor: Regional Reliability Organization.

1.2. Compliance Monitoring Period and Reset Timeframe

On request (30 calendar days).

1.3. Data Retention

None specified.

1.4. Additional Compliance Information

None.

2. Levels of Non-Compliance

2.1. Level 1: Documentation of the maintenance and testing program was incomplete, but records indicate implementation was on schedule.

2.2. Level 2: Documentation of the maintenance and testing program was incomplete, but records indicate implementation was on schedule.

2.3. Level 3: Documentation of the maintenance and testing program was incomplete, and records indicate implementation was not on schedule.

2.4. Level 4: Documentation of the maintenance and testing program, or its implementation, was not provided.

E. Regional Differences

1. None identified.

Version History

Version	Date	Action	Change Tracking
0	April 1, 2005	Effective Date	New

A. Introduction

1. Title: **Special Protection System Maintenance and Testing**

2. Number: PRC-017-0

3. Purpose: To ensure that all Special Protection Systems (SPS) are properly designed, meet performance requirements, and are coordinated with other protection systems. To ensure that maintenance and testing programs are developed and misoperations are analyzed and corrected.

4. Applicability:

4.1. Transmission Owner that owns an SPS

4.2. Generator Owner that owns an SPS

4.3. Distribution Provider that owns an SPS

5. Effective Date: April 1, 2005

B. Requirements

R1. The Transmission Owner, Generator Owner, and Distribution Provider that owns an SPS shall have a system maintenance and testing program(s) in place. The program(s) shall include:

R1.1. SPS identification shall include but is not limited to:

R1.1.1. Relays.

R1.1.2. Instrument transformers.

R1.1.3. Communications systems, where appropriate.

R1.1.4. Batteries.

R1.2. Documentation of maintenance and testing intervals and their basis.

R1.3. Summary of testing procedure.

R1.4. Schedule for system testing.

R1.5. Schedule for system maintenance.

R1.6. Date last tested/maintained.

R2. The Transmission Owner, Generator Owner, and Distribution Provider that owns an SPS shall provide documentation of the program and its implementation to the appropriate Regional Reliability Organizations and NERC on request (within 30 calendar days).

C. Measures

M1. The Transmission Owner, Generator Owner, and Distribution Provider that owns an SPS shall have a system maintenance and testing program(s) in place that includes all items in Reliability Standard PRC-017-0_R1.

M2. The Transmission Owner, Generator Owner, and Distribution Provider that owns an SPS shall have evidence it provided documentation of the program and its implementation to the appropriate Regional Reliability Organizations and NERC on request (within 30 calendar days).

D. Compliance

1. Compliance Monitoring Process

1.1. Compliance Monitoring Responsibility

Compliance Monitor: Regional Reliability Organization. Each Region shall report compliance and violations to NERC via the NERC Compliance Reporting process.

Timeframe:
On request (30 calendar days.)

1.2. Compliance Monitoring Period and Reset Timeframe

Compliance Monitor: Regional Reliability Organization.

1.3. Data Retention

None specified.

1.4. Additional Compliance Information

None.

2. Levels of Non-Compliance

2.1. Level 1: Documentation of the maintenance and testing program was incomplete, but records indicate implementation was on schedule.

2.2. Level 2: Complete documentation of the maintenance and testing program was provided, but records indicate that implementation was not on schedule.

2.3. Level 3: Documentation of the maintenance and testing program was incomplete, and records indicate implementation was not on schedule.

2.4. Level 4: Documentation of the maintenance and testing program, or its implementation, was not provided.

E. Regional Differences

1. None identified.

Version History

Version	Date	Action	Change Tracking
0	April 1, 2005	Effective Date	New

NERC
NORTH AMERICAN ELECTRIC RELIABILITY CORPORATION

Standards Announcement

Project 2007-17 – Protection System Maintenance & Testing

Successive Ballot Window Open through 8 p.m. Monday, August 27, 2012

Now Available

A successive ballot for PRC-005-2 – Protection System Maintenance is open through **8 p.m. Eastern on Monday, August 27, 2012**.

Instructions

Members of the ballot pool associated with this project may log in and submit their vote for the Standard by clicking here.

Please read carefully: All stakeholders with comments (both members of the ballot pool as well as other stakeholders, including groups such as trade associations and committees) must submit comments through the electronic comment form. During the ballot window, balloters who wish to submit comments with their ballot *may no longer enter comments on the balloting screen*, but may still enter the comments through the electronic comment form. Balloters who wish to express support for comments submitted by another entity or group will have an opportunity to enter that information and are not required to answer any other questions.

Next Steps

The drafting team will consider all comments received during the formal comment period and successive ballot and, if needed, make revisions to the standard. If the comments do not show the need for significant revisions, the standard will proceed to a recirculation ballot.

Background

The proposed PRC-005-2 – Protection System Maintenance standard addresses FERC directives from FERC Order 693, as well as issues identified by stakeholders. In accordance with the FERC directives, this draft standard establishes requirements for a time-based maintenance program, where all relevant devices are maintained according to prescribed maximum intervals. It further establishes requirements for a condition-based maintenance program, where the hands-on maintenance intervals are adjusted to reflect the known and reported condition of the relevant devices. For a performance-based maintenance program, it ascertains where the hands-on maintenance intervals are adjusted to reflect the historical performance of the relevant devices.

Documents for this project are posted on the project page.

Standards Development Process

The Standards Processes Manual contains all the procedures governing the standards development process. The success of the NERC standards development process depends on stakeholder participation. We extend our thanks to all those who participate.

For more information or assistance, please contact Monica Benson, Standards Process Administrator, at monica.benson@nerc.net or at 404-446-2560.

North American Electric Reliability Corporation
3353 Peachtree Rd, NE
Suite 600, North Tower
Atlanta, GA 30326
404-446-2560 | www.nerc.com

NERC
NORTH AMERICAN ELECTRIC RELIABILITY CORPORATION

Standards Announcement

Project 2007-17 - Protection System Maintenance and Testing

Formal Comment Period Open: July 27 – August 27, 2012

Upcoming Successive Ballot: August 17 – August 27, 2012

Now Available

A formal comment period for **PRC-005-2 – Protection System Maintenance** is open through **8 p.m. Eastern on Monday, August 27, 2012.**

The drafting team has made minor changes to the tables in the Standard along with changes to the Implementation Plan, Mapping Document and Supplemental Reference and FAQ documents. No changes have made to the Technical Justification, Table of Issues and Directives or the VRF and VSL Justification.

Note that PRC-005-2 reflects the merging of the following standards into a single standard, making it impractical to post a redline of proposed PRC-005-2 that shows the changes to the last approved version of the standard.

- PRC-005-1.1b — Transmission and Generation Protection System Maintenance and Testing
- PRC-008-0 — Underfrequency Load Shedding Equipment Maintenance Program
- PRC-011-0 — UVLS System Maintenance and Testing
- PRC-017-0 — Special Protection System Maintenance and Testing

The last approved versions of PRC-005-1.1b, PRC-008-0, PRC-011-0, and PRC-017-0 have been posted on the project page for easy reference.

Additional information is available on the project page.

Instructions for Commenting

A formal comment period is open through **8 p.m. Eastern on Monday, August 27, 2012**. Please use this electronic form to submit comments. If you experience any difficulties in using the electronic form, please contact Monica Benson at monica.benson@nerc.net. An off-line, unofficial copy of the comment form is posted on the project page.

Please read carefully: All stakeholders with comments (both members of the ballot pool as well as other stakeholders, including groups such as trade associations and committees) must submit comments through the electronic comment form. During the ballot window, balloters who wish to submit comments with their ballot *may no longer enter comments on the balloting screen*, but may still enter the comments through the electronic comment form. Balloters who wish to express support for comments submitted by another entity or group will have an opportunity to enter that information and are not required to answer any other questions.

Next Steps

A successive ballot of the standard will be conducted beginning on Friday, August 17, 2012 through 8 p.m. Eastern on Monday, August 27, 2012.

Project Background

The proposed PRC-005-2 – Protection System Maintenance standard addresses FERC directives from FERC Order 693, as well as issues identified by stakeholders. In accordance with the FERC directives, this draft standard establishes requirements for a time-based maintenance program, where all relevant devices are maintained according to prescribed maximum intervals. It further establishes requirements for a condition-based maintenance program, where the hands-on maintenance intervals are adjusted to reflect the known and reported condition of the relevant devices. For a performance-based maintenance program, it ascertains where the hands-on maintenance intervals are adjusted to reflect the historical performance of the relevant devices.

Standards Development Process

The Standards Processes Manual contains all the procedures governing the standards development process. The success of the NERC standards development process depends on stakeholder participation. We extend our thanks to all those who participate.

For more information or assistance, please contact Monica Benson, Standards Process Administrator, at monica.benson@nerc.net or at 404-446-2560.

North American Electric Reliability Corporation
3353 Peachtree Rd, NE
Suite 600, North Tower
Atlanta, GA 30326
404-446-2560 | www.nerc.com

NERC
NORTH AMERICAN ELECTRIC RELIABILITY CORPORATION

Standards Announcement

Project 2007-17 - Protection System Maintenance and Testing

Formal Comment Period Open: July 27 – August 27, 2012

Upcoming Successive Ballot: August 17 – August 27, 2012

Now Available

A formal comment period for **PRC-005-2 – Protection System Maintenance** is open through **8 p.m. Eastern on Monday, August 27, 2012.**

The drafting team has made minor changes to the tables in the Standard along with changes to the Implementation Plan, Mapping Document and Supplemental Reference and FAQ documents. No changes have made to the Technical Justification, Table of Issues and Directives or the VRF and VSL Justification.

Note that PRC-005-2 reflects the merging of the following standards into a single standard, making it impractical to post a redline of proposed PRC-005-2 that shows the changes to the last approved version of the standard.

- PRC-005-1.1b — Transmission and Generation Protection System Maintenance and Testing
- PRC-008-0 — Underfrequency Load Shedding Equipment Maintenance Program
- PRC-011-0 — UVLS System Maintenance and Testing
- PRC-017-0 — Special Protection System Maintenance and Testing

The last approved versions of PRC-005-1.1b, PRC-008-0, PRC-011-0, and PRC-017-0 have been posted on the project page for easy reference.

Additional information is available on the project page.

Instructions for Commenting

A formal comment period is open through **8 p.m. Eastern on Monday, August 27, 2012**. Please use this electronic form to submit comments. If you experience any difficulties in using the electronic form, please contact Monica Benson at monica.benson@nerc.net. An off-line, unofficial copy of the comment form is posted on the project page.

Please read carefully: All stakeholders with comments (both members of the ballot pool as well as other stakeholders, including groups such as trade associations and committees) must submit comments through the electronic comment form. During the ballot window, balloters who wish to submit comments with their ballot *may no longer enter comments on the balloting screen*, but may still enter the comments through the electronic comment form. Balloters who wish to express support for comments submitted by another entity or group will have an opportunity to enter that information and are not required to answer any other questions.

Next Steps

A successive ballot of the standard will be conducted beginning on Friday, August 17, 2012 through 8 p.m. Eastern on Monday, August 27, 2012.

Project Background

The proposed PRC-005-2 – Protection System Maintenance standard addresses FERC directives from FERC Order 693, as well as issues identified by stakeholders. In accordance with the FERC directives, this draft standard establishes requirements for a time-based maintenance program, where all relevant devices are maintained according to prescribed maximum intervals. It further establishes requirements for a condition-based maintenance program, where the hands-on maintenance intervals are adjusted to reflect the known and reported condition of the relevant devices. For a performance-based maintenance program, it ascertains where the hands-on maintenance intervals are adjusted to reflect the historical performance of the relevant devices.

Standards Development Process

The Standards Processes Manual contains all the procedures governing the standards development process. The success of the NERC standards development process depends on stakeholder participation. We extend our thanks to all those who participate.

For more information or assistance, please contact Monica Benson, Standards Process Administrator, at monica.benson@nerc.net or at 404-446-2560.

North American Electric Reliability Corporation
3353 Peachtree Rd, NE
Suite 600, North Tower
Atlanta, GA 30326
404-446-2560 | www.nerc.com

NERC
NORTH AMERICAN ELECTRIC RELIABILITY CORPORATION

Standards Announcement

Project 2007-17 – Protection System Maintenance & Testing

Successive Ballot Results

Now Available

A successive ballot for PRC-005-2 – Protection System Maintenance concluded on Monday, August 27, 2012.

Voting statistics are listed below, and the Ballot Results page provides a link to the detailed results.

Ballot Results
Quorum: 78.11%
Approval: 80.31%

Next Steps

The drafting team will consider all comments received during the formal comment period and successive ballot and, if needed, make revisions to the standard. If the comments do not show the need for significant revisions, the standard will proceed to a recirculation ballot.

Background

The proposed PRC-005-2 – Protection System Maintenance standard addresses FERC directives from FERC Order 693, as well as issues identified by stakeholders. In accordance with the FERC directives, this draft standard establishes requirements for a time-based maintenance program, where all relevant devices are maintained according to prescribed maximum intervals. It further establishes requirements for a condition-based maintenance program, where the hands-on maintenance intervals are adjusted to reflect the known and reported condition of the relevant devices. For a performance-based maintenance program, it ascertains where the hands-on maintenance intervals are adjusted to reflect the historical performance of the relevant devices.

Documents for this project are posted on the project page.

Standards Development Process

The Standards Processes Manual contains all the procedures governing the standards development process. The success of the NERC standards development process depends on stakeholder participation. We extend our thanks to all those who participate.

For more information or assistance, please contact Monica Benson, Standards Process Administrator, at monica.benson@nerc.net or at 404-446-2560.

North American Electric Reliability Corporation
3353 Peachtree Rd, NE
Suite 600, North Tower
Atlanta, GA 30326
404-446-2560 | www.nerc.com

User Name

Password

Log in

Register

-Ballot Pools
-Current Ballots
-Ballot Results
-Registered Ballot Body
-Proxy Voters

Home Page

Ballot Results

Ballot Name:	Project 2007-17 Successive Ballot PSMT July 2012_in
Ballot Period:	8/17/2012 - 8/27/2012
Ballot Type:	Initial
Total # Votes:	289
Total Ballot Pool:	370
Quorum:	**78.11 % The Quorum has been reached**
Weighted Segment Vote:	80.31 %
Ballot Results:	**The drafting team will review comments submitted.**

Summary of Ballot Results

Segment	Ballot Pool	Segment Weight	Affirmative # Votes	Affirmative Fraction	Negative # Votes	Negative Fraction	Abstain # Votes	No Vote
1 - Segment 1.	90	1	56	0.824	12	0.176	3	19
2 - Segment 2.	6	0.4	4	0.4	0	0	0	2
3 - Segment 3.	98	1	46	0.697	20	0.303	9	23
4 - Segment 4.	30	1	17	0.739	6	0.261	1	6
5 - Segment 5.	80	1	43	0.754	14	0.246	5	18
6 - Segment 6.	47	1	24	0.706	10	0.294	3	10
7 - Segment 7.	0	0	0	0	0	0	0	0
8 - Segment 8.	11	0.4	4	0.4	0	0	4	3
9 - Segment 9.	2	0.2	2	0.2	0	0	0	0
10 - Segment 10.	6	0.5	5	0.5	0	0	1	0
Totals	**370**	**6.5**	**201**	**5.22**	**62**	**1.28**	**26**	**81**

Individual Ballot Pool Results

Segment	Organization	Member	Ballot	Comments
1	Ameren Services	Kirit Shah	Affirmative	
1	American Electric Power	Paul B. Johnson	Affirmative	
1	American Transmission Company, LLC	Andrew Z Pusztai	Negative	
1	Arizona Public Service Co.	Robert Smith	Negative	
1	Associated Electric Cooperative, Inc.	John Bussman	Affirmative	
1	Austin Energy	James Armke	Affirmative	
1	Balancing Authority of Northern California	Kevin Smith	Affirmative	
1	Baltimore Gas & Electric Company	Gregory S Miller	Abstain	

1	BC Hydro and Power Authority	Patricia Robertson	Affirmative	
1	Beaches Energy Services	Joseph S Stonecipher	Negative	
1	Black Hills Corp	Eric Egge		
1	Bonneville Power Administration	Donald S. Watkins	Negative	
1	Brazos Electric Power Cooperative, Inc.	Tony Kroskey		
1	CenterPoint Energy Houston Electric	Dale Bodden	Affirmative	
1	Central Maine Power Company	Kevin L Howes		
1	City of Tacoma, Department of Public Utilities, Light Division, dba Tacoma Power	Chang G Choi	Affirmative	
1	City Utilities of Springfield, Missouri	Jeff Knottek	Affirmative	
1	Cleco Power LLC	Danny McDaniel		
1	Colorado Springs Utilities	Paul Morland		
1	Consolidated Edison Co. of New York	Christopher L de Graffenried	Affirmative	
1	Consumers Power Inc.	Stuart Sloan	Negative	
1	CPS Energy	Richard Castrejana	Affirmative	
1	Dairyland Power Coop.	Robert W. Roddy	Affirmative	
1	Dayton Power & Light Co.	Hertzel Shamash		
1	Dominion Virginia Power	Michael S Crowley	Affirmative	
1	Entergy Services, Inc.	Edward J Davis		
1	FirstEnergy Corp.	William J Smith	Affirmative	
1	Florida Keys Electric Cooperative Assoc.	Dennis Minton	Affirmative	
1	Gainesville Regional Utilities	Luther E. Fair		
1	Georgia Transmission Corporation	Harold Taylor		
1	Great River Energy	Gordon Pietsch	Affirmative	
1	Hoosier Energy Rural Electric Cooperative, Inc.	Bob Solomon		
1	Hydro One Networks, Inc.	Ajay Garg	Affirmative	
1	Hydro-Quebec TransEnergie	Bernard Pelletier	Affirmative	
1	Idaho Power Company	Ronald D Schellberg		
1	Imperial Irrigation District	Tino Zaragoza	Affirmative	
1	International Transmission Company Holdings Corp	Michael Moltane	Affirmative	
1	Kansas City Power & Light Co.	Michael Gammon		
1	Lee County Electric Cooperative	John W Delucca	Affirmative	
1	Lincoln Electric System	Doug Bantam		
1	Long Island Power Authority	Robert Ganley	Affirmative	
1	Los Angeles Department of Water & Power	Ly M Le		
1	Lower Colorado River Authority	Martyn Turner	Affirmative	
1	Manitoba Hydro	Joe D Petaski	Negative	
1	MEAG Power	Danny Dees	Affirmative	
1	MidAmerican Energy Co.	Terry Harbour	Affirmative	
1	Minnkota Power Coop. Inc.	Richard Burt	Affirmative	
1	Muscatine Power & Water	Tim Reed		
1	N.W. Electric Power Cooperative, Inc.	Mark Ramsey	Affirmative	
1	Nebraska Public Power District	Cole C Brodine	Negative	
1	New Brunswick Power Transmission Corporation	Randy MacDonald	Abstain	
1	Northeast Missouri Electric Power Cooperative	Kevin White	Affirmative	
1	Northeast Utilities	David Boguslawski	Affirmative	
1	Northern Indiana Public Service Co.	Kevin M Largura	Negative	
1	NorthWestern Energy	John Canavan	Negative	
1	Ohio Valley Electric Corp.	Robert Mattey	Affirmative	
1	Omaha Public Power District	Doug Peterchuck	Affirmative	
1	Oncor Electric Delivery	Brenda Pulis	Affirmative	
1	Orlando Utilities Commission	Brad Chase		
1	Otter Tail Power Company	Daryl Hanson		
1	PacifiCorp	Colt Norrish		
1	PECO Energy	Ronald Schloendorn	Affirmative	
1	Platte River Power Authority	John C. Collins	Affirmative	
1	Portland General Electric Co.	John T Walker	Affirmative	
1	Potomac Electric Power Co.	David Thorne	Affirmative	
1	PPL Electric Utilities Corp.	Brenda L Truhe	Affirmative	
1	Progress Energy Carolinas	Brett A. Koelsch	Abstain	
1	Public Service Company of New Mexico	Laurie Williams		
1	Public Service Electric and Gas Co.	Kenneth D. Brown	Affirmative	
1	Public Utility District No. 1 of Okanogan County	Dale Dunckel	Affirmative	
1	Puget Sound Energy, Inc.	Denise M Lietz	Affirmative	

1	Rochester Gas and Electric Corp.	John C. Allen	Affirmative	
1	Sacramento Municipal Utility District	Tim Kelley	Affirmative	
1	Salt River Project	Robert Kondziolka	Affirmative	
1	Santee Cooper	Terry L Blackwell	Affirmative	
1	Seattle City Light	Pawel Krupa	Negative	
1	Sho-Me Power Electric Cooperative	Denise Stevens	Affirmative	
1	Sierra Pacific Power Co.	Rich Salgo	Affirmative	
1	Snohomish County PUD No. 1	Long T Duong	Affirmative	
1	South California Edison Company	Steven Mavis	Affirmative	
1	Southern Company Services, Inc.	Robert A. Schaffeld	Affirmative	
1	Southwest Transmission Cooperative, Inc.	James Jones	Affirmative	
1	Sunflower Electric Power Corporation	Noman Lee Williams	Affirmative	
1	Tennessee Valley Authority	Larry G Akens	Negative	
1	Tri-State G & T Association, Inc.	Tracy Sliman	Affirmative	
1	United Illuminating Co.	Jonathan Appelbaum	Affirmative	
1	Westar Energy	Allen Klassen	Affirmative	
1	Western Area Power Administration	Brandy A Dunn	Negative	
1	Western Farmers Electric Coop.	Forrest Brock	Affirmative	
1	Xcel Energy, Inc.	Gregory L Pieper	Affirmative	
2	Alberta Electric System Operator	Mark B Thompson		
2	BC Hydro	Venkataramakrishnan Vinnakota	Affirmative	
2	Independent Electricity System Operator	Barbara Constantinescu	Affirmative	
2	Midwest ISO, Inc.	Marie Knox		
2	New Brunswick System Operator	Alden Briggs	Affirmative	
2	PJM Interconnection, L.L.C.	Tom Bowe	Affirmative	
3	AEP	Michael E Deloach	Affirmative	
3	Alabama Power Company	Richard J. Mandes	Affirmative	
3	Ameren Services	Mark Peters	Affirmative	
3	APS	Steven Norris	Negative	
3	Arkansas Electric Cooperative Corporation	Philip Huff	Abstain	
3	Atlantic City Electric Company	NICOLE BUCKMAN	Affirmative	
3	BC Hydro and Power Authority	Pat G. Harrington	Affirmative	
3	Blachly-Lane Electric Co-op	Bud Tracy	Abstain	
3	Bonneville Power Administration	Rebecca Berdahl	Negative	
3	Central Electric Cooperative, Inc. (Redmond, Oregon)	Dave Markham	Abstain	
3	Central Electric Power Cooperative	Ralph J Schulte		
3	Central Lincoln PUD	Steve Alexanderson	Affirmative	
3	City of Austin dba Austin Energy	Andrew Gallo	Affirmative	
3	City of Clewiston	Lynne Mila	Negative	
3	City of Farmington	Linda R Jacobson	Affirmative	
3	City of Garland	Ronnie C Hoeinghaus		
3	City of Green Cove Springs	Gregg R Griffin	Abstain	
3	City of Redding	Bill Hughes	Affirmative	
3	Clearwater Power Co.	Dave Hagen	Negative	
3	Cleco Corporation	Michelle A Corley	Affirmative	
3	Colorado Springs Utilities	Lisa Cleary		
3	ComEd	Bruce Krawczyk	Affirmative	
3	Consolidated Edison Co. of New York	Peter T Yost	Affirmative	
3	Constellation Energy	CJ Ingersoll		
3	Consumers Energy	Richard Blumenstock	Negative	
3	Consumers Power Inc.	Roman Gillen	Negative	
3	Coos-Curry Electric Cooperative, Inc	Roger Meader	Negative	
3	Cowlitz County PUD	Russell A Noble	Affirmative	
3	CPS Energy	Jose Escamilla	Affirmative	
3	Delmarva Power & Light Co.	Michael R. Mayer	Affirmative	
3	Dominion Resources Services	Michael F. Gildea	Affirmative	
3	Douglas Electric Cooperative	Dave Sabala		
3	Duke Energy Carolina	Henry Ernst-Jr	Abstain	
3	Fall River Rural Electric Cooperative	Bryan Case	Abstain	
3	FirstEnergy Energy Delivery	Stephan Kern	Affirmative	
3	Flathead Electric Cooperative	John M Goroski		
3	Florida Municipal Power Agency	Joe McKinney	Negative	
3	Florida Power Corporation	Lee Schuster	Negative	
3	Gainesville Regional Utilities	Kenneth Simmons	Negative	
3	Georgia Power Company	Anthony L Wilson	Affirmative	

3	Georgia Systems Operations Corporation	William N. Phinney	Affirmative	
3	Great River Energy	Sam Kokkinen	Affirmative	
3	Gulf Power Company	Paul C Caldwell	Affirmative	
3	Hydro One Networks, Inc.	David Kiguel	Affirmative	
3	Imperial Irrigation District	Jesus S. Alcaraz	Affirmative	
3	JEA	Garry Baker		
3	Kansas City Power & Light Co.	Charles Locke		
3	Kissimmee Utility Authority	Gregory D Woessner		
3	Lakeland Electric	Mace D Hunter	Negative	
3	Lane Electric Cooperative, Inc.	Rick Crinklaw	Abstain	
3	Lincoln Electric Cooperative, Inc.	Michael Henry		
3	Lincoln Electric System	Jason Fortik	Affirmative	
3	Lost River Electric Cooperative	Richard Reynolds		
3	Louisville Gas and Electric Co.	Charles A. Freibert	Affirmative	
3	M & A Electric Power Cooperative	Stephen D Pogue	Affirmative	
3	Manitoba Hydro	Greg C. Parent	Negative	
3	Manitowoc Public Utilities	Thomas E Reed	Affirmative	
3	MidAmerican Energy Co.	Thomas C. Mielnik	Affirmative	
3	Mississippi Power	Jeff Franklin	Affirmative	
3	Modesto Irrigation District	Jack W Savage		
3	Municipal Electric Authority of Georgia	Steven M. Jackson		
3	Muscatine Power & Water	John S Bos	Affirmative	
3	Nebraska Public Power District	Tony Eddleman	Negative	
3	New York Power Authority	Marilyn Brown	Affirmative	
3	Niagara Mohawk (National Grid Company)	Michael Schiavone	Affirmative	
3	Northeast Missouri Electric Power Cooperative	Skyler Wiegmann	Affirmative	
3	Northern Indiana Public Service Co.	William SeDoris	Negative	
3	Northern Lights Inc.	Jon Shelby	Negative	
3	Okanogan County Electric Cooperative, Inc.	Ray Ellis		
3	Orange and Rockland Utilities, Inc.	David Burke	Affirmative	
3	Orlando Utilities Commission	Ballard K Mutters		
3	Owensboro Municipal Utilities	Thomas T Lyons	Negative	
3	Pacific Gas and Electric Company	John H Hagen	Affirmative	
3	Platte River Power Authority	Terry L Baker	Affirmative	
3	Potomac Electric Power Co.	Robert Reuter		
3	Progress Energy Carolinas	Sam Waters		
3	Public Service Electric and Gas Co.	Jeffrey Mueller	Affirmative	
3	Public Utility District No. 1 of Clallam County	David Proebstel		
3	Public Utility District No. 2 of Grant County	Greg Lange		
3	Puget Sound Energy, Inc.	Erin Apperson		
3	Raft River Rural Electric Cooperative	Heber Carpenter	Abstain	
3	Rayburn Country Electric Coop., Inc.	Eddy Reece		
3	Rutherford EMC	Thomas M Haire	Affirmative	
3	Sacramento Municipal Utility District	James Leigh-Kendall	Affirmative	
3	Salmon River Electric Cooperative	Ken Dizes	Affirmative	
3	Salt River Project	John T. Underhill	Affirmative	
3	Santee Cooper	James M Poston	Affirmative	
3	Seattle City Light	Dana Wheelock	Negative	
3	Seminole Electric Cooperative, Inc.	James R Frauen	Negative	
3	South Carolina Electric & Gas Co.	Hubert C Young		
3	South Mississippi Electric Power Association	Gary Hutson		
3	Tacoma Public Utilities	Travis Metcalfe	Affirmative	
3	Tampa Electric Co.	Ronald L. Donahey	Affirmative	
3	Tennessee Valley Authority	Ian S Grant	Negative	
3	Umatilla Electric Cooperative	Steve Eldrige	Negative	
3	West Oregon Electric Cooperative, Inc.	Marc M Farmer	Abstain	
3	Wisconsin Electric Power Marketing	James R Keller	Affirmative	
3	Xcel Energy, Inc.	Michael Ibold	Affirmative	
4	Alliant Energy Corp. Services, Inc.	Kenneth Goldsmith	Affirmative	
4	American Public Power Association	Allen Mosher	Affirmative	
4	Central Lincoln PUD	Shamus J Gamache	Affirmative	
4	City of Austin dba Austin Energy	Reza Ebrahimian	Affirmative	
4	City of Clewiston	Kevin McCarthy	Negative	
4	City of New Smyrna Beach Utilities Commission	Tim Beyrle		
4	City of Redding	Nicholas Zettel	Affirmative	
4	City Utilities of Springfield, Missouri	John Allen	Affirmative	

4	Consumers Energy	David Frank Ronk	Negative	
4	Cowlitz County PUD	Rick Syring	Affirmative	
4	Flathead Electric Cooperative	Russ Schneider		
4	Florida Municipal Power Agency	Frank Gaffney	Negative	
4	Fort Pierce Utilities Authority	Thomas Richards		
4	Georgia System Operations Corporation	Guy Andrews	Affirmative	
4	Illinois Municipal Electric Agency	Bob C. Thomas	Negative	
4	Imperial Irrigation District	Diana U Torres	Affirmative	
4	Indiana Municipal Power Agency	Jack Alvey		
4	Madison Gas and Electric Co.	Joseph DePoorter	Affirmative	
4	Modesto Irrigation District	Spencer Tacke	Affirmative	
4	Northern California Power Agency	Tracy R Bibb		
4	Ohio Edison Company	Douglas Hohlbaugh	Affirmative	
4	Pacific Northwest Generating Cooperative	Aleka K Scott	Abstain	
4	Public Utility District No. 1 of Douglas County	Henry E. LuBean	Affirmative	
4	Public Utility District No. 1 of Snohomish County	John D Martinsen	Affirmative	
4	Sacramento Municipal Utility District	Mike Ramirez	Affirmative	
4	Seattle City Light	Hao Li	Negative	
4	Seminole Electric Cooperative, Inc.	Steven R Wallace	Negative	
4	South Mississippi Electric Power Association	Steven McElhaney		
4	Tacoma Public Utilities	Keith Morisette	Affirmative	
4	Wisconsin Energy Corp.	Anthony Jankowski	Affirmative	
5	AEP Service Corp.	Brock Ondayko	Affirmative	
5	AES Corporation	Leo Bernier	Affirmative	
5	Amerenue	Sam Dwyer	Affirmative	
5	Arizona Public Service Co.	Edward Cambridge	Negative	
5	BC Hydro and Power Authority	Clement Ma	Affirmative	
5	Boise-Kuna Irrigation District/dba Lucky peak power plant project	Mike D Kukla	Negative	
5	Bonneville Power Administration	Francis J. Halpin	Negative	
5	City and County of San Francisco	Daniel Mason	Affirmative	
5	City of Austin dba Austin Energy	Jeanie Doty	Affirmative	
5	City of Grand Island	Jeff Mead	Abstain	
5	City of Redding	Paul A. Cummings	Affirmative	
5	City of Tacoma, Department of Public Utilities, Light Division, dba Tacoma Power	Max Emrick		
5	Cleco Power	Stephanie Huffman	Affirmative	
5	Cogentrix Energy, Inc.	Mike D Hirst	Affirmative	
5	Colorado Springs Utilities	Jennifer Eckels	Affirmative	
5	Consolidated Edison Co. of New York	Wilket (Jack) Ng	Affirmative	
5	Constellation Power Source Generation, Inc.	Amir Y Hammad		
5	Cowlitz County PUD	Bob Essex	Affirmative	
5	CPS Energy	Robert Stevens		
5	Detroit Edison Company	Christy Wicke	Negative	
5	Dominion Resources, Inc.	Mike Garton	Affirmative	
5	Duke Energy	Dale Q Goodwine	Negative	
5	Dynegy Inc.	Dan Roethemeyer	Affirmative	
5	East Kentucky Power Coop.	Stephen Ricker	Affirmative	
5	Exelon Nuclear	Michael Korchynsky	Affirmative	
5	ExxonMobil Research and Engineering	Martin Kaufman		
5	FirstEnergy Solutions	Kenneth Dresner	Affirmative	
5	Florida Municipal Power Agency	David Schumann	Negative	
5	Great River Energy	Preston L Walsh	Affirmative	
5	Green Country Energy	Greg Froehling		
5	Imperial Irrigation District	Marcela Y Caballero	Affirmative	
5	Invenergy LLC	Alan Beckham	Affirmative	
5	JEA	John J Babik		
5	Kissimmee Utility Authority	Mike Blough	Abstain	
5	Lakeland Electric	James M Howard	Negative	
5	Liberty Electric Power LLC	Daniel Duff	Affirmative	
5	Lincoln Electric System	Dennis Florom	Affirmative	
5	Los Angeles Department of Water & Power	Kenneth Silver	Affirmative	
5	Lower Colorado River Authority	Tom Foreman	Affirmative	
5	Luminant Generation Company LLC	Mike Laney	Affirmative	
5	Manitoba Hydro	S N Fernando	Negative	
5	Massachusetts Municipal Wholesale Electric Company	David Gordon	Abstain	

5	MEAG Power	Steven Grego		
5	MidAmerican Energy Co.	Christopher Schneider		
5	Muscatine Power & Water	Mike Avesing	Affirmative	
5	Nebraska Public Power District	Don Schmit	Negative	
5	New Harquahala Generating Co. LLC	Nathaniel Larson		
5	New York Power Authority	Gerald Mannarino	Affirmative	
5	North Carolina Electric Membership Corp.	Jeffrey S Brame	Affirmative	
5	Northern Indiana Public Service Co.	William O. Thompson	Negative	
5	Occidental Chemical	Michelle R DAntuono	Affirmative	
5	Oklahoma Gas and Electric Co.	Kim Morphis	Affirmative	
5	Omaha Public Power District	Mahmood Z. Safi	Affirmative	
5	Orlando Utilities Commission	Richard Kinas		
5	Pacific Gas and Electric Company	Richard J. Padilla	Affirmative	
5	PacifiCorp	Sandra L. Shaffer	Affirmative	
5	Platte River Power Authority	Roland Thiel		
5	Portland General Electric Co.	Gary L Tingley	Affirmative	
5	PPL Generation LLC	Annette M Bannon	Affirmative	
5	Progress Energy Carolinas	Wayne Lewis		
5	Proven Compliance Solutions	Mitchell E Needham	Abstain	
5	PSEG Fossil LLC	Mikhail Falkovich	Affirmative	
5	Puget Sound Energy, Inc.	Tom Flynn	Affirmative	
5	Sacramento Municipal Utility District	Bethany Hunter	Affirmative	
5	Salt River Project	Glen Reeves		
5	Santee Cooper	Lewis P Pierce	Affirmative	
5	Seattle City Light	Michael J. Haynes	Negative	
5	Seminole Electric Cooperative, Inc.	Brenda K. Atkins	Negative	
5	Snohomish County PUD No. 1	Sam Nietfeld		
5	South Mississippi Electric Power Association	Jerry W Johnson		
5	Southern Company Generation	William D Shultz	Affirmative	
5	Tampa Electric Co.	RJames Rocha	Negative	
5	Tenaska, Inc.	Scott M. Helyer	Abstain	
5	Tennessee Valley Authority	David Thompson	Negative	
5	Tri-State G & T Association, Inc.	Barry Ingold	Affirmative	
5	U.S. Army Corps of Engineers	Melissa Kurtz	Affirmative	
5	U.S. Bureau of Reclamation	Martin Bauer		
5	Westar Energy	Bo Jones		
5	Western Farmers Electric Coop.	Caleb J Muckala		
5	Wisconsin Electric Power Co.	Linda Horn	Affirmative	
6	AEP Marketing	Edward P. Cox	Affirmative	
6	APS	Randy A. Young	Negative	
6	Associated Electric Cooperative, Inc.	Brian Ackermann	Affirmative	
6	Bonneville Power Administration	Brenda S. Anderson	Negative	
6	City of Austin dba Austin Energy	Lisa L Martin	Affirmative	
6	City of Redding	Marvin Briggs	Affirmative	
6	Cleco Power LLC	Robert Hirchak	Affirmative	
6	Colorado Springs Utilities	Lisa C Rosintoski	Affirmative	
6	Consolidated Edison Co. of New York	Nickesha P Carrol	Affirmative	
6	Constellation Energy Commodities Group	Brenda L Powell	Affirmative	
6	Dominion Resources, Inc.	Louis S. Slade	Affirmative	
6	Duke Energy Carolina	Walter Yeager	Negative	
6	Exelon Power Team	Pulin Shah		
6	FirstEnergy Solutions	Kevin Querry	Affirmative	
6	Florida Municipal Power Agency	Richard L. Montgomery	Negative	
6	Florida Municipal Power Pool	Thomas Washburn		
6	Florida Power & Light Co.	Silvia P. Mitchell	Negative	
6	Great River Energy	Donna Stephenson		
6	Imperial Irrigation District	Cathy Bretz	Affirmative	
6	Kansas City Power & Light Co.	Jessica L Klinghoffer		
6	Lakeland Electric	Paul Shipps	Negative	
6	Lincoln Electric System	Eric Ruskamp	Affirmative	
6	Manitoba Hydro	Daniel Prowse	Negative	
6	MidAmerican Energy Co.	Dennis Kimm	Abstain	
6	Muscatine Power & Water	John Stolley	Affirmative	
6	New York Power Authority	William Palazzo	Affirmative	
6	Northern Indiana Public Service Co.	Joseph O'Brien	Negative	
6	NRG Energy, Inc.	Alan Johnson	Abstain	
6	Omaha Public Power District	David Ried	Affirmative	

6	PacifiCorp	Scott L Smith		
6	Platte River Power Authority	Carol Ballantine	Affirmative	
6	PPL EnergyPlus LLC	Mark A Heimbach	Affirmative	
6	Progress Energy	John T Sturgeon	Abstain	
6	PSEG Energy Resources & Trade LLC	Peter Dolan	Affirmative	
6	Public Utility District No. 1 of Chelan County	Hugh A. Owen		
6	Sacramento Municipal Utility District	Claire Warshaw	Affirmative	
6	Salt River Project	Steven J Hulet	Affirmative	
6	Santee Cooper	Michael Brown	Affirmative	
6	Seattle City Light	Dennis Sismaet	Negative	
6	Seminole Electric Cooperative, Inc.	Trudy S. Novak		
6	Snohomish County PUD No. 1	William T Moojen		
6	South California Edison Company	Lujuanna Medina	Affirmative	
6	Southern Company Generation and Energy Marketing	John J. Ciza	Affirmative	
6	Tacoma Public Utilities	Michael C Hill	Affirmative	
6	Tampa Electric Co.	Benjamin F Smith II		
6	Tennessee Valley Authority	Marjorie S. Parsons	Negative	
6	Xcel Energy, Inc.	David F. Lemmons		
8		James A Maenner		
8		Merle Ashton	Affirmative	
8		Kristina M. Loudermilk		
8		Roger C Zaklukiewicz	Abstain	
8		Edward C Stein		
8	INTELLIBIND	Kevin Conway	Abstain	
8	JDRJC Associates	Jim Cyrulewski	Affirmative	
8	Pacific Northwest Generating Cooperative	Margaret Ryan	Abstain	
8	Transmission Strategies, LLC	Bernie M Pasternack	Abstain	
8	Utility Services, Inc.	Brian Evans-Mongeon	Affirmative	
8	Volkmann Consulting, Inc.	Terry Volkmann	Affirmative	
9	Commonwealth of Massachusetts Department of Public Utilities	Donald Nelson	Affirmative	
9	National Association of Regulatory Utility Commissioners	Diane J. Barney	Affirmative	
10	New York State Reliability Council	Alan Adamson	Affirmative	
10	Northeast Power Coordinating Council	Guy V. Zito	Affirmative	
10	ReliabilityFirst Corporation	Anthony E Jablonski	Abstain	
10	SERC Reliability Corporation	Carter B. Edge	Affirmative	
10	Texas Reliability Entity, Inc.	Donald G Jones	Affirmative	
10	Western Electricity Coordinating Council	Steven L. Rueckert	Affirmative	

Legal and Privacy
404.446.2560 voice : 404.446.2595 fax
Atlanta Office: 3353 Peachtree Road, N.E. : Suite 600, North Tower : Atlanta, GA 30326
Washington Office: 1325 G Street, N.W. : Suite 600 : Washington, DC 20005-3801

Account Log-In/Register

Copyright © 2012 by the North American Electric Reliability Corporation. : All rights reserved.
A New Jersey Nonprofit Corporation

Name (23 Responses)
Organization (23 Responses)
Group Name (14 Responses)
Lead Contact (14 Responses)
Contact Organization (14 Responses)
IF YOU WISH TO EXPRESS SUPPORT FOR ANOTHER ENTITY'S COMMENTS WITHOUT ENTERING ANY ADDITIONAL COMMENTS, YOU MAY DO SO HERE. (0 Responses)
Comments (37 Responses)
Question 1 (28 Responses)
Question 1 Comments (33 Responses)
Question 2 (28 Responses)
Question 2 Comments (33 Responses)
Question 3 (27 Responses)
Question 3 Comments (33 Responses)
Question 4 (0 Responses)
Question 4 Comments (33 Responses)

Individual
Tom Finch
CYPL
City of Palo Alto Utilities
Individual
Eric Scott
City of Palo Alto
Yes
Yes
No
These comments supercede the comments submitted earlier by Tom Finch by mistake. Attachment A "Criteria for a Performance-Based Protection System Maintenance Program" requires a minimum segment population of 60 Components in order to justify a PSMP. We feel the 60 component requirement is arbitrary and discriminates against small entities such as Palo Alto which do not have 60 components and may wish to implement a performance-based PSMP. We feel the decision on whether to use a time-based or performance-based PSMP should be made by the Entity and not NERC.
Individual
Cleyton Tewksbury
Bridgeport Energy
Yes
Yes
No
Individual
Joe O'Brien

NIPSCO
Comment: Test and maintenance data requirements need to be specific and not open to interpretation. Examples: 1. The number of data points required on an impedance circle graph for a relay calibration versus maximum torque angle only. 2. Verification of inputs into microprocessor relay records to include magnitude or is a check box sufficient.
Individual
Thad Ness
American Electric Power
Yes
Yes
We believe the text “Once an entity has designated PRC-005-2 as its maintenance program for specific Protection System components, they cannot revert to the original program for those components” does improve the clarity of the standard.
Yes
On page 82, the text “in accessible” should be correct as “inaccessible”.
Group
Northeast Power Coordinating Council
Guy Zito
Northeast Power Coordinating Council
Yes
Yes
No
Individual
J. S. Stonecipher, PE
Beaches Energy Services
Yes
Yes
Applicability does not align with previously approved interpretation of “Transmission Protection System”, Appendix 1 of the current V1 standard, that basically says that protection systems applicable to the standard are those that both “detect faults” and “trip” BES equipment. Applicability 4.2.1 says: “Protection Systems that are installed for the purpose of detecting Faults on BES Elements”, which does not match “and” relationship of the interpretation. Eliminating this “and” relationship will cause distribution protection to be swept into the standards, such as reverse power relays designed to “detect” faults on the transmission system but “trip” distribution breakers.

Distribution is expressly excluded in Section 215 and these types of relays have no impact on BES reliability. Zero defect approach, should move to what CIP v5 is moving towards of internal controls rather than strict 100% compliance, or even better, a Total Quality Management approach. UFLS and UVLS testing – broaches on distribution which is expressly excluded from Section 215 jurisdiction – when discussing control circuit testing, instrument transformer testing, etc.. We believe the requirement should be relay-only testing. We also believe that the incremental benefit is not worth the increased costs, e.g., one UFLS relay not operating has insignificant impact on a UFLS event; whereas one relay not operating to clear a fault has significant impact.
Group
Southwest Power Pool Reliability Standards Development Team
Jonathan Hayes
Southwest Power Pool
Yes
Yes
Yes
On page 70 of the document we noticed that the word “reakers” was used and would suggest this was intended to be “breakers”. Also on page 81 of the document under the section of “My VRLA batteries have multiple-cells within an individual battery jar (or unit); how am I expected to comply with the cell-to-cell ohmic measurement requirements on these units that I cannot get to?” We would suggest that the wording be changed on “in accessible” to remove the space to give you “Inaccessible”.
We have a concern that the RE would have difficulty in implementation of the phased in approach. We would suggest extensive training for the auditors for this standard and others which have these multi phased approaches to implementation. With this training it would also be beneficial if NERC would hold a webinar to fill in the industry on the training provided to keep everyone on the same page. We would like to also suggest that NERC compliance staff work with the Drafting Team to develop the RSAWs for this standard.
Individual
Chris McVicker
Puget Sound Energy
Yes
Yes
No
Sealed Battery Maintenance: The requirement of impedance testing the batteries every 6 months seems excessive based on our experience. We have been successfully maintaining our sealed cells with impedance testing at 36 months. CT testing on Neutrals The requirement to verify operation is not possible on the Neutral CT as they don’t normally carry current. There should be a clarification that verification of readings can only occur (and is only required) on phase CT’s and the neutral CT is excluded. Dual Trip Coil Check In our experience the requirement to verify operation of both trip coils through a trip is overly burdensome and does not improve the reliability of the system. Testing to verify operation of the output relays, proper tripping of the breaker, and verification of trip coil continuity is sufficient to verify the protective system will operate appropriately. Breaker Failure Relay Testing In our experience testing of the breaker failure relay up to the relay outputs is sufficient to ensure proper operation. The tripping of the breakers through the coils is maintained through the individual relay maintenance. Requiring clearing of the main bus during maintenance is not practical and may negatively impact the reliability of the Bulk Electric System.
Individual

Nazra Gladu
Manitoba Hydro
Yes
Yes
Table of Contents - The drawing should be removed from the Table of Contents. Introduction and Summary: [Page 1] - Should include “Canada”. The sentence should read “The standards are mandatory and enforceable in the United States and Canada”. Protection Systems Product Generations: [page 8] - We suggest changing "control Systems" to "control systems". [Page 28]: “Voltage & Current Sensing Device …” should be “Voltage and current sensing device …” [Page 29] "Control Circuit" should not be capitalized. [Page 44] A space is missing: “performance formal-performing segments” should be “performance for mal-performing segments”. [Page 45] "Other problems ..." ascribed to batteries may also apply to other Protection System Components, and therefore does not require special mention for batteries. This paragraph should be removed. [Page 67]: Normally-open contacts of relays 94 & 86 should be treated the same as the current-carrying contacts if they are in use.
Manitoba Hydro is maintaining our negative vote based on our previously submitted comments (see comments submitted in the comment period ending on March 28th, 2012. Additionally, Standard PRC-005-2: R3: "minimum maintenance activities" is not specified in the Tables. We suggest removing the word "minimum". R5: It is not clearly stated that the Unresolved Maintenance issues must be identified. As written, only "identified Unresolved Maintenance Issues" are applicable in R5. Measure M1: “responsible entity(s)” is not defined in the standard. The format of examples is inconsistent with the other measures. We suggest replacing "... (such as ... drawings) ..." with "The evidence may include, but is not limited to, manufacturer's specifications or engineering drawings. ...". Evidence Retention: There is no statement in either the requirements or the measures regarding a "dated" PSMP. VSL: R3 - "minimum maintenance activities" is not specified in the Tables. We suggest removing the word "minimum". R5 - We suggest "identified Unresolved Maintenance Issues" to agree with the wording in R5. Table 1.1: The Maintenance Activities statement "For all unmonitored relays:" is redundant since it is specified in the Component Attributes. Table 3: Voltage and current sensing devices for UFLS or UVLS should be excluded from periodic maintenance if they are connected to microprocessors relays with AC measurements continuously verified with alarming, as provided for voltage and current sensing devices in Table 1-3. The wording "Protection System dc supply for tripping non-BES interrupting devices used only for a UFLS or UVLS system" is unclear. It is unclear if "used only for a UFLS or UVLS system" applies to the "Protection System dc supply" or to the "non-BES interrupting devices". Exclusions in Table 1-4(f) which pertain to verifying dc supply voltage should also apply to the dc supply in Table 3. Attachment A - To maintain the technical justification Item 5: for consistency with Item 4 and the VSL, we suggest changing the wording to "If the Components in a Protection System Segment maintained through a performance-based PSMP experience more than 4% Countable Events, develop, document, and implement an action plan to reduce the Countable Events to no more than 4% of the Segment population within 3 years." Technical Justification: "Other problems ..." [page 7] ascribed to batteries may also apply to other Components, and therefore does not require special mention for batteries. This paragraph should be removed. Pages 12 to 13 – The numbering should agree with the standard. Item 10 [page 13] - For consistency with the previous item and the VSL, we suggest changing the wording to "If the Components in a Protection System Segment maintained through a performance-based PSMP experience more than 4% Countable Events, develop, document, and implement an action plan to reduce the Countable Events to no more than 4% of the Segment population within 3 years." The bullet “All of the relevant communication system tests still apply” was added in examples 1 and 2 on pages 68 and 69 of the Supplementary Reference and FAQ – Draft PRC0005-2 Protection System Maintenance (JULY 2012) document (SRFAQ). This makes reference to Table 3 (page 26) of the Standard, but Table 3 does not identify communication systems as a Component Attribute. Table 1-2 (Communications Systems) on page 14 of the standard also excludes the UFLS and UVLS equipment on Table 3. Section 15.7, page 91, of the SRFAQ document also states “No maintenance activity is required for associated communication systems for distributed UFLS and distributed UVLS schemes”. I

believe that since no communications systems has been identified in Table 3, this bullet cannot be added to the examples identified above in the SRFAQ document. Implementation Plan: Should entities be given a single compliance date for each of the maintenance intervals, and be allowed the flexibility to schedule and complete their maintenance as required while transitioning to the defined time intervals in PRC-002-2. For example, if a maximum maintenance interval is 6 calendar years, should the implementation plan only require that "The entity shall be 100% compliant on the first day of the first calendar quarter 84 months following applicable regulatory approval, or in those jurisdictions where no regulatory approval is required, on the first day of the first calendar quarter 96 months following Board of Trustees adoption."? The existing standard PRC-005-1 already requires protection systems to be maintained as part of a program. Prescribing how an entity must reach full compliance may provide a negligible improvement in reliability, while significantly increasing the compliance burden. PRC-005-2 affects a large number of assets, and proving compliance for prescribed percentages of assets during the transition period may create unnecessary overhead with little added value.
Individual
Keith Morisette
Tacoma Power
Yes
In Table 1-2, for unmonitored communications systems, under Maintenance Activities, 'communication system' is used, but in the next row, 'communications system' is used. These terms should be consistent.
Yes
Yes
On page 88, third bullet, change "auxiliary communications equipment" to "associated communications equipment" for consistency. In Figure A-1, what is meant by "Also verify wiring and test switches"? The emphasis of this question is on 'test switches'.
Individual
Steven Wallace
Seminole Electric Cooperative, Inc.
Florida Municipal Power Agency and the Illinois Municipal Power Agency, Duke Energy and WAPA
Group
Duke Energy
Greg Rowland
Duke Energy
Yes
Yes
No
Duke Energy votes "Negative" because we strongly object to the wording in the Applicability section 4.2.1 which expands the reach of the standard to relaying schemes that detect faults on the BES but which are not intended to provide protection for the BES. Duke Energy's standard protection scheme for dispersed generation at retail stations would become subject to the standard due to the changes in section 4.2.1. These protection schemes are designed to detect faults on the BES, but do not operate BES elements nor do they interrupt network current flow from the BES. The new wording in section 4.2.1 would add significant O&M costs and resource constraints due to the inclusion of protection system devices at retail stations without increasing the reliability of the BES. FERC's

September 26, 2011 Order in Docket No. RD11-5 approved NERC's interpretation of PRC-005-1 R1 and R2, stating: "The interpretation clarifies that the Requirements are "applicable to any Protection System that is installed for the purpose of detecting faults on transmission elements (lines, buses, transformers, etc.) identified as being included in the [BES] and trips an interrupting device that interrupts current supplied directly from the BES." This interpretation is consistent with the Commission's understanding that a "transmission Protection System" is installed for the purpose of detecting and isolating faults affecting the reliability of the bulk electric system through the use of current interrupting devices." Duke Energy proposes the following wording for Section 4.2.1: "Protection Systems that are installed for the purpose of protecting BES Elements (lines, buses, transformers, etc.)".
Individual
Kirit Shah
Ameren
Yes
Ameren supports these changes in the interest of BES reliability.
Yes
Ameren supports this practical reality.
No
Ameren supports PRC-005-2 in the interest of BES reliability. We also appreciates the SDT's overall high quality product and looks forward to its implementation; however, we still assert that 1) the zero tolerance approach, in this case involving significantly large number (thousands) of devices, is an impractical requirement, 2) the VRF for R3 should be Medium, and 3) maintenance records for replaced equipment should not be retained. We' have raised these concerns and justified our position repeatedly but yet not convinced the SDT to change their position.
Group
O&M Group
Joe Uchiyama
US Burau of Reclamation
Yes
Yes
Yes
(1) We do not agree with no maintenance on the battery monitoring systm (2) Also, we do not agree with replacing a battery capacity test by evaluating cell/unit meaurements indicative of battery performance against station battery bseline.
None
Individual
Scott Bos
Muscatine Power and Water
MIdwest Reliability Organization NERC Standards Review Forum (MRO NSRF)
Individual
test
test
Group
Dominion
Connie Lowe

Dominion
Yes
Yes
No
Page 11 of the PRC-005-2 redline standard, Version History; Previous versions (i.e. 0, 1, 1a, 1b) need to be included here.
Individual
Michelle R D'Antuono
Ingelside Cogeneration LP
Yes
Ingleside Cogeneration LP was prepared to support a six year maintenance interval – which was specified in all other drafts of PRC-005-2. We agree that the project team's modification is necessary to correct a mistake that crept into the last version.
Yes
Ingleside Cogeneration LP sees the modifications to the implementation plan as a clarification-only. We had anticipated that auditors will look for evidence that a legacy program remains in place until a specifically-identified transition date. In fact, the project team should consider adding an allowance for entities to adopt PRC-005-2 immediately upon FERC's approval. This may mean in rare cases that maintenance activities and intervals managed in accordance with PRC-005-1b will drop out of the program; but if the industry and regulatory bodies agree that the new program is superior, there is no reliability purpose served by waiting. Furthermore, the maintenance activities will continue anyways – they will just not be subject to auditor review. Unfortunately, NERC Compliance has taken the opposite position for the implementation of the CIP version 4 "bright-line criteria" – which we believe is counter-productive to our shared commitment to reliability. Just as with PRC-005-2, a thorough evaluation showed that the elimination of ambiguity reduces risk to the greater system. It is disingenuous to require outdated standards to remain in place simply to avoid a possibility that a borderline facility remain on the regulatory books.
No
Group
Southern Company
Antonio Grayson
Operations Compliance
No
Suggestion – Change the interval back to 12 years instead of 6 years. The 12 year interval is reasonable considering that un-monitored communications systems will be functionally tested every 4 months
No
The "General Consideration" sentence in question above is superflouous and therefore unnecessary. The instruction provided in the sentence is (repeated and) more clearly stated in the first sentence of the "Retirement of Existing Standards:" section.
Yes
We strongly suggest that the SDT modify the Applicability section to clarify that Sections 4.2.1 thru 4.2.4 apply to transmission and distribution facilities, and that Section 4.2.5 defines the generator

owner applicability by making changes similar to these proposed below. Without this distinctive change, there exists an ability to mis-interpret Section 4.2.1 such that auditors may apply this standard to a generation scope wider than is specified in the NERC Statement of Registry Criteria (Rev 5). We propose the following changes to 4.2.1 thru 4.2.4: 1) Replace the existing 4.2.1 with “Protection Systems for transmission and distribution Facilities, including:” 2) Move the existing 4.2.1 thru 4.2.4 to subparts of the new 4.2.1 as 4.2.1.1, 4.2.1.2, 4.2.1.3, 4.2.1.4.
Group
IEEE Stationary Battery Committee Task Force
Chris Searles
IEEE Stationary Battery Committee
Chris Searles
Yes
Yes
Yes
In Section 7.1-Frequently Asked Questions, pg 24 - add "or" before "other measurements" inadvertently left out. In Section 8.1.2.4 - 4th & 5th sentences. Consider changing the verbiage: "....The Protection System owner may want to follow the guidelines in the applicable IEEE recommended practices for battery maintenance and testing, especially if the battery in question is used for application requirements in addition to the strict protection and control demands covered under this standard." In section 15.4.1 - (pg 74) "What is the State of Charge...." In the first paragraph on page 74, the first complete sentence, I think the intent is to say "For these two types of batteries, and also for VRLA batteries," . . .
Group
Florida Municipal Power Agency
Frank Gaffney
Florida Municipal Power Agency
Yes
Yes
Applicability does not align with previously approved interpretation of “transmission Protection System”, Appendix 1 of the current V1 standard, that basically says that protection systems applicable to the standard are those that both “detect faults” and “trip” BES equipment. Applicability 4.2.1 says: “Protection Systems that are installed for the purpose of detecting Faults on BES Elements”, which does not match “and” relationship of the interpretation. Eliminating this “and” relationship will cause distribution protection to be swept into the standards, such as reverse power relays designed to “detect” faults on the transmission system but “trip” distribution breakers. Distribution is expressly excluded in Section 215 and these types of relays have no impact on BES reliability. Zero defect approach, should move to what CIP v5 is moving towards of internal controls rather than strict 100% compliance, or even better, a Total Quality Management approach. UFLS and UVLS testing – broaches on distribution which is expressly excluded from Section 215 jurisdiction – when discussing control circuit testing, instrument transformer testing, etc.. We believe the requirement should be relay-only testing. We also believe that the incremental benefit is not worth the increased costs, e.g., one UFLS relay not operating has insignificant impact on a UFLS event; whereas one relay not operating to clear a fault has significant impact.
Individual
Andrew Z. Pusztai
American Transmission Company

Yes
Yes
No
ATC recommends that the SDT change the text of “Standard PRC-005-2 – Protection System Maintenance” Table 1-5 on page 24, Row 1, Column 3 to: “Verify that a trip coil is able to operate the circuit breaker, interrupting device, or mitigating device.” Or alternately, “Electrically operate each interrupting device every 6 years” Basis for the change: Trip coils are designed to be energized no longer than the breaker opening time (3-5 cycles). They are robust devices that will successfully operate the breaker for 5,000-10,000 electrical operations. In addition, many utilities purchase breakers with dual redundant trip coils to mitigate the possibility of a failure. Interrupting devices with multiple trip coils operate the same mechanism. Therefore, by requiring testing of each trip coil in a redundant system you double the amount of times the system is out of its desired state without increasing the performance of the device. It is well recognized that the most likely source of trip coil failure is the breaker operating mechanism binding, thereby preventing the breaker auxiliary stack from opening and keeping the trip coil energized for too long of a time period. Therefore, trip coil failure is a function of the breaker mechanism failure. Exercising the breakers and circuit switchers is an excellent practice to mitigate the most prevalent cause of breaker failure. ATC would encourage language that would suggest this task be done every 2 years, not to exceed 3 years. Exercising the interrupting devices would help eliminate mechanism binding, reducing the chance that the trip coils are energized too long. The language, as currently written in Table 1-5 row 1, will also have the unintentional effect of changing an entities existing interrupting device maintenance interval (essentially driving interrupting device testing to a less than 6 year cycle). ATC continues to recommend a negative ballot since we believe that the testing of “each” trip coil will result in the increased amount of time the BES is in a less intact system configuration. ATC hopes that the SDT will consider these changes.
Individual
Anthony Jablonski
ReliabitliyFirst
Yes
ReliabilityFirst thanks the SDT for changing the maximum time for unmonitored systems within Table 1-2 back to six years. However, RFC continues to believe the language in Requirement R5 (“...shall demonstrate efforts to correct...”) is subjective and will be hard to measure. RFC believes at a minimum, the applicable entity should be required to develop a Corrective Action Plan to address the Unresolved Maintenance Issue. Without the formality and burden of a full-fledged Corrective Action Plan, ReliabilityFirst is concerned the identified Unresolved Maintenance Issues may not get resolved or resolved in a timely manner. ReliabilityFirst offers the following modification for consideration: “Each Transmission Owner, Generator Owner, and Distribution Provider shall put in place a Corrective Action Plan to remedy all identified Unresolved Maintenance Issues.”
Individual
Yves Lavoie
Primax Technologies Inc.
In 15.4.1 Frequently Asked Questions, to the question: What did the PSMT SDT mean by “continuity”

of the dc supply? One of the proposed methods for ensuring continuity is the following: Specific gravity tests can infer continuity because, without continuity, there could be no charging occurring; and if there is no charging, then specific gravity will go down below acceptable levels. Comment: I agree that the the uncharghed cell's specific gravity would drop but it would take weeks or months to show. Should power be needed from the battery during this period of time the battery would not be able to perform as it should. To me this an unacceptable risk
Individual
Bob Thomas
Illinois Municipal Electric Agency
Yes
Yes
Please see response to Question 4.
As indicated in previous comments, Illinois Municipal Electric Agency (IMEA) appreciates SDT efforts, and supports the overall refinements in PRC-005-2. However, IMEA respectfully disagrees with the SDT's decision to not resolve the inconsistency between 4.2.1 and the FERC-approved interpretation in PRC-005-1b. Whether the term "transmission Protection System" is used in PRC-005-2, as indicated in the SDT response to our comments, is not the point. The interpretation in PRC-005-1b provides clarity to smaller entities in particular regarding which protective devices need to be factored into compliance with PRC-005 (and other PRC standards). This inconsistency should have been more clearly vetted within the industry given the fact that this was a recently NERC- and FERC-approved Protection System interpretation which was being compromised by the proposed language in 4.2.1. Once again, we find ourselves aiming at a constantly moving compliance target. This issue has the potential to require more DPs to comply with PRC-005, and draw more small entities into registration, which of course would require increased resource expenditures associated with compliance. This issue does not appear to be consistent with NERC and FERC efforts to minimize the impact on smaller entities that have minimal or no potential to impact the BES. If the 4.2.1 language was carefully considered so as not to unnecessarily impact small entities, it would be appreciated that these provisions be more clearly addressed in the "Supplementary Reference and FAQ". Thank you for this opportunity to comment. This issue is significant enough that IMEA felt a Negative vote was unfortunately necessary on an otherwise significant improvement to PRC-005.
Group
Luminant
Brenda Hampton
Luminant Energy Company LLC
Yes
Yes
Yes
Group
Western Area Power Administration
Brandy A. Dunn
Western Area Power Administration (Corp. Services Office)
Yes

No
The logistics of these statements are confusing and need further clarification as to intent and implementation.
Yes
Yes. The standard itself should be more clearly written so that a 100+ page Supplementary Reference and FAQ Document is not needed. This document is also not enforceable, nor is it a standard, so verbiage which interprets the standard and forces requirements should be removed.
Western feels that our comments and concerns as provided on the previous comment form were not adequately addressed. Those comments are repeated below: Western Area Power Administration is appreciative of the hard work done by the SDT and NERC. We respectfully submit our professional opinion that the increased relay testing required by the PRC-005-2 will result in a net degradation to the reliability of the BES due to human hands disturbing working systems. We propose that auxiliary relays be tested at commissioning and anytime the circuits are rewired or redesigned. If there is evidence that the relay has functioned properly in its current configuration then the best practice for ensuring reliability is to leave it alone. The maintenance interval of 6 years for lock-out relay testing is not consistent with 12 year interval of auxiliary relay testing or control circuit testing. No justification is provided for this increased testing interval of lock-out relays versus other electro-mechanical devices. These inconsistent testing intervals, within the same protection control schemes and protective devices, will complicate the industry's Protection System Maintenance Program and cause an increase in maintenance costs. Condition Based Monitoring or Performance Based Monitoring are not allowed on trip coil circuits or lock-out relays. This is inconsistent with current or future technology. Deviation from the 6 year testing interval should be allowed, using CBM or PBM. The Standard should not present a barrier to technology advancements or industry initiatives. The continuous, frequent testing of these devices is detrimental to system reliability. Disagree with testing of the dc control portion of the sudden pressure device as defined by the FAQ. We feel that this device and its wiring were deemed out of scope previously. Do not use the FAQ to modify the standard. The FAQ should strictly be used for clarification only. A standard that relies on a lengthy FAQ and multiple CAN's needs to be re-written concisely and clearly.
Individual
Eric Salsbury
Consumers Energy
1. We agree with the purpose in section 3 of the Standard. However, section 4.2.1 expands the scope from "affecting the reliability of the Bulk Electric System" to "detecting Faults on BES Elements". In our opinion, the Applicability should be limited to the stated Purpose. Expanding the scope as is done in 4.2.1 greatly increases the number of Protection Systems covered without an increase in reliability of the BES. We prefer the applicability as expressed in Appendix 1 of PRC-005-1b. 2. We suggest changing "Component Type" in R1.2 to something similar to "Segment" as defined within the Standard. A "Component Type" limits to one of five categories, whereas a "Segment" must share similar attributes.
Individual
Jonathan Meyer
Idaho Power Company
Yes
Yes
No

None
Group
Nebraska Public Power District
Cole Brodine
Nebraska Public Power District
Yes
Yes
No
Keeping records after the end of the audit period does not increase the current reliability of the electric grid. Requiring records to be kept for longer time periods will increase the risk to utilities of making a mistake in their record keeping and receiving a fine due to the zero tolerance policy drafted in the standard. Records beyond the audit period, up to 24 years old, don't have any effect on the reliability of the current bulk electric system. A key concern is will the reliability of the bulk electric system be affected negatively due to increased risk from human element initiated events as a result of the more frequent functional trip checks that will be required. I suggest there be consideration that the interval for functional tests be moved to the minimum frequency of 12 years to minimize this unknown but present risk. We recommend removing requirement 5. This is adding the requirement for a corrective action program to the standard. Performance metrics should be utilized to measure if a registered entity is correcting maintenance deficiencies in a timely manner. Examples of performance metrics include: -A Countable event has already been defined in the definition of terms, which would cover the need to replace equipment. -The quantity and causes of Misoperations are a direct correlation to good or poor maintenance practices and corrective actions by a utility. -TADS records events which are initiated by failed protection system equipment and would identify utilities with poor corrective action processes.
Group
ACES Standards Collaborators
Jason Marshall
ACES Power
Yes
Yes
We thank the drafting team for this consideration that will allow early compliance with the new version of the standard. This plan should avoid many of the transitional issues that have occurred with other new versions of standards.
Yes
We suggest that the document should clarify Table 1-4(f). We understand from conversations with drafting team members that not all component attributes have to be met for the exclusion to apply. Rather each component attribute only has to be met individually for the exclusion to apply. We appreciate the drafting team including the localized definitions in the supplementary reference document. However, we believe there is still confusion with the use of component. Component is capitalized within the definition but it is not capitalized throughout the document. We believe the term should be capitalized throughout the document to be clear the localized definition applies. Capitalization of most instances of "system" has been correctly removed since the NERC definition was not consistent with the use. However, there are a few instances where it was removed and should not have been. One example occurs in the second paragraph on page 5 in the red-line document where "system collapse" should be "System Collapse". In the third paragraph on page 5 in the red-line document, "transmission" should be capitalized since the NERC definition would be

applicable.
The drafting team has done an outstanding job refining the standard. Because no standard will ever be perfect, we believe industry and reliability would be best served to move the standard to recirculation ballot at this point. Regarding Requirement R1 VSLs, we continue to believe that missing three component types should not jump to a Severe VSL when missing two is a Moderate VSL. Missing three should be a High VSL.
Group
Tennessee Valley Authority
Dennis Chastain
Tennessee Valley Authority
Yes
The intent of this modification is not clear. It could be interpreted as allowing an entity, for any given Protection System component identified in Table 1-1 through Table 1-5, to choose to maintain those components under an existing maintenance program that is compliant with the legacy standards until PRC-005-2 completely retires PRC-005-1b, PRC-008-0, PRC-011-0 and PRC-017-0 (first calendar quarter one hundred fifty-six (156) months following regulatory approval of PRC-005-2). For example, if an entity elects to maintain unmonitored communications system components described in Table 1-2 using its program that is compliant with the legacy standards, when would it have to meet the intervals defined in Table 1-2? The use of “or” under “General Considerations” indicates that compliance with the legacy standards is acceptable until such time that all of the legacy standards are retired.
No
TVA appreciates the work that the standard drafting team has done on PRC-005-2. As stated in our comments on Draft 3, TVA is concerned with the maximum maintenance interval of 4 calendar months specified for unmonitored communications systems in Table 1-2, and for that reason has voted negative. A longer implementation timeframe is needed for replacement of the unmonitored units.
Individual
Brad Harris
CenterPoint Energy
Yes
Yes
No
CenterPoint Energy recommends that PRC-005-2 include a built-in tolerance and move away from a zero-defect enforcement model. Achieving one-hundred percent schedule and documentation compliance is negatively impacting resources on an industry-wide basis for the sake of the “last one percent” and is not needed to provide an adequate level of BES reliability. Entities should be allowed the opportunity to correct minor deficiencies discovered in the program via customary mitigation activities as part of an internal controls policy and good utility practice instead of via the enforcement channel. One possible avenue for incorporating such a tolerance into the Standard is to establish a threshold for the Lower VSL. For example, the Lower VSL for requirement R3 could state: “For Protection System Components included within a time-based maintenance program, the responsible entity failed to maintain more than 1% but 5% or less of the total Components included within a specific Protection System Component type in accordance with the minimum maintenance activities and maximum maintenance intervals prescribed within Tables 1-1 through 1-5, Table 2, and Table 3.”.

Group
Bonneville Power Administration
Chris Higgins
Transmission Reliability Program
No
BPA believes that changing the language from "channels" to "communications systems" does not clarify the intent since "communications systems" is not defined in the standard. The term “communications systems” which is referenced in the Supplementary Reference and FAQ document remains ambiguous. BPA recommends one of these two definitions be included in the standard: 1) If the intent is to cover only the Communications Equipment and “channel” as defined above: “Communications System” – The Communications System as defined for the purposes of PRC-005-02 consists of a Component’s signaling inputs and outputs and the communications channel that these signals traverse. The intervening carrier communications devices that transport this channel are explicitly excluded from the definition of Communications System. 2) If the intent is to cover the Communications Equipment, “channel” and the cloud functionally: “Communications System” – The Communications System as defined for the purposes of PRC-005-02 consists of a Component’s signaling inputs and outputs and the communications channel that these signals traverse. The Communications System includes the simple end-to-end functionality of the intervening carrier communications devices that transport this channel but explicitly excludes intermediate switching, redundant paths, packet routing, digital cross-connections and other “cloud” carrier elements from the definition of Communications System.
Yes
No
BPA appreciates that the Standards Development Team does not believe that communications batteries are included in PRC-005-2 standard. While BPA believes the SDT did not intend to include communications batteries in the standard, this intention is neither captured by the language of the standard nor explicit in the Supplementary Reference and FAQ document. Ambiguity on regulation of communications batteries provides no benefit and comprises a concrete regulatory risk to BPA during an audit. BPA strongly believes that the standard should articulate exactly what types and applications of batteries it means to regulate and which batteries it does not.
Individual
Brett Holland
KCP&L/ KCPL-GMO
Yes
Yes
No
Individual
Edward Amato
Midtronics Inc
Yes
Yes

Yes
The paragraphs below are from page 83 of the document (page 89 of the pdf). The first paragraph below contains the words, “risen above” and “over” a baseline. For conductance trending would be going below a baseline. Since this is a technical standard I think there should be a comment noting the difference in trending of conductance as compared to resistance and impedance like it is in the next paragraph. For VRLA batteries, there are two drivers for internal ohmic readings. The first driver is for a means to trend battery life. Trending against the baseline of VRLA cells in a battery string is essential to determine the approximate state of health of the battery. Ohmic measurement testing may be used as the mechanism for measuring the battery cells. If all the cells in the string exhibit a consistent trend line and that trend line has not risen above a specific deviation (e.g. 30%) over baseline, then a judgment can be made that the battery is still in a reasonably good state of health and able to ‘perform as manufactured.’ It is essential that the specific deviation mentioned above is based on data (test or otherwise) that correlates the ohmic readings for a specific battery/tester combination to the health of the battery. This is the intent of the “perform as manufactured six-month test” at Row 4 on Table 1-4b. The second big driver is VRLA batteries tendency for thermal runaway. This is the intent of the “thermal runaway test” at Row 2 on Table 1-4b. In order to detect a cell in thermal runaway, you need not necessarily have a formal trending program. When a single cell/unit changes significantly or significantly varies from the other cells (e.g. a doubling of resistance/impedance or a 50% decrease in conductance), there is a high probability that the cell/unit/string needs to be replaced as soon as possible. In other words, if the battery is 10 years old and all the cells have approached a significant change in ohmic values over baseline, then you have a battery which is approaching end of life. You need to get ready to buy a new battery, but you do not have to worry about an impending catastrophic failure. On the other hand, if the battery is five years old and you have one cell that has a markedly different ohmic reading than all the other cells, then you need to be worried that this cell is in thermal runaway and catastrophic failure is imminent.

Consideration of Comments

Project 2007-17 Protection System Maintenance and Testing

The Protection System Maintenance and Testing Drafting Team would like to thank all commenters who submitted comments on the 4th draft of the standard for Protection System Maintenance. These standards were posted for a 30-day public comment period from July 27, 2012 through August 27, 2012. Stakeholders were asked to provide feedback on the standards and associated documents through a special electronic comment form. There were 36 sets of comments, including comments from approximately 102 different people and from approximately 65 companies representing 9 of the 10 Industry Segments as shown in the table on the following pages.

All comments submitted may be reviewed in their original format on the standard's project page.

If you feel that your comment has been overlooked, please let us know immediately. Our goal is to give every comment serious consideration in this process! If you feel there has been an error or omission, you can contact the Vice President and Director of Standards, Mark Lauby, at 404-446-2560 or at mark.lauby@nerc.net. In addition, there is a NERC Reliability Standards Appeals Process.[1]

Summary Consideration of all Comments Received:

The only edit to the standard was to add an "s" to "communication" in several locations within Table 1-2 for consistency. The term is now "communications system" throughout the table.

Definitions: No changes made.

Applicability: No changes made.

Requirements: No changes made.

Tables: In Table 1-2, added an "s" to "communication" in several locations for consistency. The term is now "communications system" throughout the table.

Measures: No changes made.

VSLs: In the VSLs for Requirement R5, the word "identify" was added to each VSL to be consistent with the requirement.

Supplementary Reference and FAQ Document: Various spelling and punctuation errors were corrected, and additional content was added to improve the reference document.

Implementation Plan: No changes made.

[1] The appeals process is in the Standard Processes Manual: http://www.nerc.com/files/Appendix_3A_StandardsProcessesManual_20120131.pdf

Unresolved Minority Views:

- A few commenters questioned the inclusion of breaker trip coil verification, auxiliary relay verification, and/or lockout relay verification. The drafting team responded that each of these devices needs to be maintained at the prescribed intervals to assure reliability.
- Several commenters were concerned that an entity has to be "perfect" in order to be compliant; the SDT responded that NERC Standards currently allow no provision for any degree of non-performance relative to the requirements.
- Several commenters continued to object to inclusion of UFLS and UVLS relays, in that they may not be installed on BES equipment. The drafting team responded that these devices, while not on BES equipment, are installed for the reliability of the BES, and are therefore included. The drafting team further noted that these devices are currently addressed in PRC-008-0 and PRC-011-0.
- A few commenters questioned the inclusion of the dc control circuitry for sudden pressure relays even though the relays themselves are excluded from the definition of "Protection System"; the SDT reiterated its position that this dc control circuitry is included because the dc control circuitry is associated with protective functions.
- Several commenters expressed concerns regarding Requirement R5 and Unresolved Maintenance Issues. The SDT explained its rationale for the requirement as drafted.

Index to Questions, Comments, and Responses

1. In response to stakeholder input, the SDT made several changes to Table 1-2 of the standard, as detailed below: 12
2. The SDT modified the Implementation Plan as follows: 16
3. The SDT made complementary changes in the "Supplementary Reference and FAQ Document" to provide supporting discussion for the Requirements within the standard. Do you have any specific suggestions for further improvements? 21
4. If you have any other comments that you have NOT provided in response to the above questions, please provide them here. (Please do not repeat comments that you provided elsewhere.) 28

The Industry Segments are:

1 — Transmission Owners
2 — RTOs, ISOs
3 — Load-serving Entities
4 — Transmission-dependent Utilities
5 — Electric Generators
6 — Electricity Brokers, Aggregators, and Marketers
7 — Large Electricity End Users
8 — Small Electricity End Users
9 — Federal, State, Provincial Regulatory or other Government Entities
10 — Regional Reliability Organizations, Regional Entities

Group/Individual		Commenter	Organization	Registered Ballot Body Segment									
				1	2	3	4	5	6	7	8	9	10
1.	Group	Guy Zito	Northeast Power Coordinating Council										X

	Additional Member	Additional Organization	Region	Segment Selection
1.	Alan Adamson	New York State Reliability Council, LLC	NPCC	10
2.	Carmen Agavriloai	Independent Electricity System Operator	NPCC	2
3.	Greg Campoli	New York Independent System Operator	NPCC	2
4.	Sylvain Clermont	Hydro-Quebec TransEnergie	NPCC	1
5.	Chris de Graffenried	Consolidated Edison Co. of New York, Inc.	NPCC	1
6.	Gerry Dunbar	Northeast Power Coordinating Council	NPCC	10
7.	Mike Garton	Dominion Resources Services, Inc.	NPCC	5
8.	Kathleen Goodman	ISO - New England	NPCC	2
9.	Michael Jones	National Grid	NPCC	1
10.	David Kiguel	Hydro One Networks Inc.	NPCC	1

Group/Individual	Commenter	Organization	Registered Ballot Body Segment									
			1	2	3	4	5	6	7	8	9	10
11. Michael R. Lombardi	Northeast Utilities	NPCC 1										
12. Randy MacDonald	New Brunswick Power Transmission	NPCC 9										
13. Bruce Metruck	New York Power Authority	NPCC 6										
14. Silvia Parada Mitchell	NextEra Energy, LLC	NPCC 5										
15. Lee Pedowicz	Northeast Power Coordinating Council	NPCC 10										
16. Robert Pellegrini	The United Illuminating Company	NPCC 1										
17. Si-Truc Phan	Hydro-Quebec TransEnergie	NPCC 1										
18. David Ramkalawan	Ontario Power Generation, Inc.	NPCC 5										
19. Brian Robinson	Utility Services	NPCC 8										
20. Michael Schiavone	National Grid	NPCC 1										
21. Wayne Sipperly	New York Power Authority	NPCC 5										
22. Donald Weaver	New Brunswick System Operator	NPCC 2										
23. Ben Wu	Orange and Rockland Utilities	NPCC 1										
24. Peter Yost	Consolidated Edison Co. of New York, Inc.	NPCC 3										
2. Group	Jonathan Hayes	Southwest Power Pool Reliability Standards Development Team		X								

	Additional Member	Additional Organization	Region	Segment Selection
1.	Jonathan Hayes	Southwest Power Pool	SPP	NA
2.	Robert Rhodes	Southwest Power Pool	SPP	NA
3.	John Allen	City Utilities of Springfield	SPP	1, 4
4.	Clem Cassmeyer	Western Farmers Electric Cooperative	SPP	1, 3, 5
5.	Terri Pyle	Oklahoma Gas and Electric	SPP	1, 3, 5
6.	Sandra Sanscrainte	ITC holdings	SPP	NA
7.	Katie Shea	Westar Energy	SPP	1, 3, 5, 6
8.	Tim Bobb	Westar Energy	SPP	1, 3, 5, 6

3. Group	Greg Rowland	Duke Energy	X		X		X	X				

	Additional Member	Additional Organization	Region	Segment Selection
1.	Doug Hils	Duke Energy	RFC	1
2.	Lee Schuster	Duke Energy	FRCC	3
3.	Dale Goodwine	Duke Energy	SERC	5
4.	Greg Cecil	Duke Energy	SERC	6

Group/Individual		Commenter	Organization	Registered Ballot Body Segment									
				1	2	3	4	5	6	7	8	9	10
4.	Group	Connie Lowe	Dominion	X		X		X	X				

	Additional Member	Additional Organization	Region	Segment Selection
1.	Mike Garton		NPCC	5, 6
2.	Louis Slade		RFC	5, 6
3.	Randi Heise		SERC	5, 6
4.	Mike Crowley		SERC	1, 3

5.	Group	Frank Gaffney	Florida Municipal Power Agency	X		X	X	X	X				

	Additional Member	Additional Organization	Region	Segment Selection
1.	Timothy Beyrle	City of New Smyrna Beach	FRCC	4
2.	Greg Woessner	Kissimmee Utility Authority	FRCC	3
3.	Jim Howard	Lakeland Electric	FRCC	3
4.	Lynne Mila	City of Clewiston	FRCC	3
5.	Joe Stonecipher	Beaches Energy Services	FRCC	1
6.	Cairo Vanegas	Fort Pierce Utility Authority	FRCC	4
7.	Randy Hahn	Ocala Utility Services	FRCC	3

6.	Group	Brenda Hampton	Luminant						X				

	Additional Member	Additional Organization	Region	Segment Selection
1.	Mike Laney	Luminant Generation Company LLC	ERCOT	5

7.	Group	Jason Marshall	ACES Standards Collaborators						X				

	Additional Member	Additional Organization	Region	Segment Selection
1.	Shari Heino	Brazos Electric Power Cooperative	ERCOT	1, 5
2.	Scott Brame	North Carolina Electric Membership Corporation	RFC	1, 3, 4, 5
3.	Clem Cassmeyer	Western Farmers Electric Cooperative	SPP	1, 5
4.	Megan Wagner	Sunflower Electric Power Corporation	SPP	1
5.	Ashley Gonyer	East Kentucky Power Cooperative	SERC	1, 3, 5

8.	Group	Dennis Chastain	Tennessee Valley Authority	X		X		X	X				

	Additional Member	Additional Organization	Region	Segment Selection
1.	Rusty Hardison		SERC	1
2.	Pat Caldwell		SERC	1
3.	David Thompson		SERC	5

Group/Individual		Commenter	Organization	Registered Ballot Body Segment									
				1	2	3	4	5	6	7	8	9	10
4. Jerry Finley			SERC 1										
5. Robert Brown			SERC 5										
6. Tom Vandervort			SERC 5										
7. Annette Dudley			SERC 5										
9.	Group	Chris Higgins	Bonneville Power Administration	X		X		X	X				
	Additional Member	Additional Organization	Region Segment Selection										
1. Jason		Burt	WECC 1										
2. Heather		Laslo	WECC 1										
3. Fred		Bryant	WECC 1										
4. Rita		Coppernoll	WECC 1										
5. Mason		Bibles	WECC 1										
6. Brenda		Vasbinder	WECC 1										
10.	Individual	Joe Uchiyama	O&M Group						X			X	
11.	Individual	Antonio Grayson	Southern Company	X		X		X	X				
12.	Individual	Brandy A. Dunn	Western Area Power Administration	X					X				
13.	Individual	Cole Brodine	Nebraska Public Power District	X		X		X					
14.	Individual	Tom Finch	CYPL			X							
15.	Individual	Eric Scott	City of Palo Alto			X							
16.	Individual	Cleyton Tewksbury	Bridgeport Energy					X					
17.	Individual	Joe O'Brien	NIPSCO	X		X		X	X				
18.	Individual	Thad Ness	American Electric Power	X		X		X	X				
19.	Individual	J. S. Stonecipher, PE	Beaches Energy Services	X								X	
20.	Individual	Chris McVicker	Puget Sound Energy	X				X					
21.	Individual	Nazra Gladu	Manitoba Hydro	X		X		X	X				
22.	Individual	Keith Morisette	Tacoma Power	X		X	X	X	X				
23.	Individual	Steven Wallace	Seminole Electric Cooperative, Inc.			X	X	X	X				
24.	Individual	Kirit Shah	Ameren	X		X		X	X				
25.	Individual	Scott Bos	Muscatine Power and Water	X		X		X	X				

Group/Individual		Commenter	Organization	Registered Ballot Body Segment									
				1	2	3	4	5	6	7	8	9	10
26.	Individual	Michelle R D'Antuono	Ingelside Cogeneration LP										
27.	Individual	Andrew Z. Pusztai	American Transmission Company	X									
28.	Individual	Anthony Jablonski	ReliabitliyFirst										X
29.	Individual	Yves Lavoie	Primax Technologies Inc.										
30.	Individual	Bob Thomas	Illinois Municipal Electric Agency				X						
31.	Individual	Eric Salsbury	Consumers Energy			X	X	X					
32.	Individual	Jonathan Meyer	Idaho Power Company	X		X							
33.	Individual	Brad Harris	CenterPoint Energy	X									
34.	Individual	Brett Holland	KCP&L/ KCPL-GMO	X		X		X	X				
35.	Individual	Edward Amato	Midtronics Inc										
36.	Individual	Chris Searles	IEEE Stationary Battery Committee Task Force										

If you support the comments submitted by another entity and would like to indicate you agree with their comments, please select "agree" below and enter the entity's name in the comment section (please provide the name of the organization, trade association, group, or committee, rather than the name of the individual submitter).

It is not necessary to answer the remainder of the questions unless you have additional comments that have not already been provided by the entity whose comments you are supporting. Each entity that indicates support for another entity's comments will be counted as having provided comments, regardless of whether they provide any additional comments.

Summary Consideration:

Organization	Agree	Support Comments Submitted by Another Entity
Northeast Power Coordinating Council		
Southwest Power Pool Reliability Standards Development Team		
Duke Energy		
Dominion		
Florida Municipal Power Agency		
Luminant		
ACES Standards Collaborators		
Tennessee Valley Authority		

Organization	Agree	Support Comments Submitted by Another Entity
Bonneville Power Administration		
O&M Group		
Southern Company		
Western Area Power Administration		
Nebraska Public Power District		
CYPL		City of Palo Alto Utilities
City of Palo Alto		
Bridgeport Energy		
NIPSCO		
American Electric Power		
Beaches Energy Services		
Puget Sound Energy		
Manitoba Hydro		
Tacoma Power		
Seminole Electric Cooperative, Inc.		Florida Municipal Power Agency and the Illinois Municipal Power Agency, Duke Energy and WAPA

Organization	Agree	Support Comments Submitted by Another Entity
Ameren		
Muscatine Power and Water		MIdwest Reliability Organization NERC Standards Review Forum (MRO NSRF)
Ingelside Cogeneration LP		
American Transmission Company		
ReliabitliyFirst		
Primax Technologies Inc.		
Illinois Municipal Electric Agency		
Consumers Energy		
Idaho Power Company		
CenterPoint Energy		
KCP&L/ KCPL-GMO		
Midtronics Inc		

1. **In response to stakeholder input, the SDT made several changes to Table 1-2 of the standard, as detailed below:**
   - **The interval for the second portion of the first row of the table was changed from 12 years to 6 years.**
   - **The term "channels" was modified to "communications system" in two locations.**
   - **The Component Attributes in the last row were modified to clarify that all attributes must be present to use the associated intervals and activities.**

Do you agree with these changes? If not, please provide specific suggestions for changes to Table 1-2 in the comment area.

Summary Consideration: In general, the industry was supportive of the changes to the table. More clarification on the scope of the "communications systems" was provided in Section 15.5.1 of the Supplementary Reference and FAQ document, and the term, "communication system" was corrected to "communications system."

Organization	Yes or No	Question 1 Comment
Bonneville Power Administration	No	BPA believes that changing the language from "channels" to "communications systems" does not clarify the intent since "communications systems" is not defined in the standard. The term "communications systems" which is referenced in the Supplementary Reference and FAQ document remains ambiguous. BPA recommends one of these two definitions be included in the standard:1) If the intent is to cover only the Communications Equipment and "channel" as defined above:"Communications System" - The Communications System as defined for the purposes of PRC-005-02 consists of a Component's signaling inputs and outputs and the communications channel that these signals traverse. The intervening carrier communications devices that transport this channel are explicitly excluded from the definition of Communications System.2) If the intent is to cover the Communications Equipment, "channel" and the cloud functionally:"Communications System" - The Communications System as defined for the purposes of PRC-005-02 consists of a Component's

Organization	Yes or No	Question 1 Comment
		signaling inputs and outputs and the communications channel that these signals traverse. The Communications System includes the simple end-to-end functionality of the intervening carrier communications devices that transport this channel but explicitly excludes intermediate switching, redundant paths, packet routing, digital cross-connections and other "cloud" carrier elements from the definition of Communications System.
Response: Thank you for your comments. It is the drafting team's intent to require the entity to perform maintenance on the protective system communications part of the scheme to verify that it is performing as required. Both the communications equipment and the channel are part of that. If that channel is a third-party leased circuit, then the entity can only verify performance of the channel and not maintain any of its equipment. If the channel is a power line carrier and owned by the entity, the performance can be verified and the equipment can be maintained, if necessary. This standard is proscribed from describing "how" to perform an overall functional test of a communications system; it is left to the entity to determine what methods best address their program. **Also, Section 15.5.1 of the Supplementary Reference and FAQ document was revised to further discuss communications systems.**		
Southern Company	No	Suggestion - Change the interval back to 12 years instead of 6 years. The 12 year interval is reasonable considering that un-monitored communications systems will be functionally tested every 4 months
Response: Thank you for your comments. The drafting team respectfully disagrees. Although an entity functionally tests an unmonitored communications system every four months, there is no requirement to have the pertinent performance criteria verified as part of this functional test. Testing the communications system's performance criteria involves additional tests, such as those described in Section 15.5.1 of the Supplementary Reference and FAQ document. Of course, an entity can always perform both types of tests on a four-month interval, but at this time we see no reason to have the performance criteria verification at a four-month interval. An entity has the latitude to perform maintenance more frequently than specified, if it feels that such maintenance is needed.		
Tacoma Power	Yes	In Table 1-2, for unmonitored communications systems, under Maintenance Activities, 'communication system' is used, but in the next row,

Organization	Yes or No	Question 1 Comment
		'communications system' is used. These terms should be consistent.
Response: Thank you for your comment. The drafting team has revised the Table 1-2 to consistently use "communications systems."		
Ameren	Yes	Ameren supports these changes in the interest of BES reliability.
Response: Thank you for your support.		
Ingelside Cogeneration LP	Yes	Ingleside Cogeneration LP was prepared to support a six year maintenance interval - which was specified in all other drafts of PRC-005-2. We agree that the project team's modification is necessary to correct a mistake that crept into the last version.
Response: Thank you for your support.		
Northeast Power Coordinating Council	Yes	
Southwest Power Pool Reliability Standards Development Team	Yes	
Duke Energy	Yes	
Dominion	Yes	
Chris Searles	Yes	
Florida Municipal Power Agency	Yes	
Luminant	Yes	

Organization	Yes or No	Question 1 Comment
ACES Standards Collaborators	Yes	
Tennessee Valley Authority	Yes	
O&M Group	Yes	
Western Area Power Administration	Yes	
Nebraska Public Power District	Yes	
City of Palo Alto	Yes	
Bridgeport Energy	Yes	
American Electric Power	Yes	
Beaches Energy Services	Yes	
Puget Sound Energy	Yes	
American Transmission Company	Yes	
ReliabitliyFirst	Yes	
Idaho Power Company	Yes	
CenterPoint Energy	Yes	
KCP&L/ KCPL-GMO	Yes	
Midtronics Inc	Yes	

2. The SDT modified the Implementation Plan as follows:

- **Within "Retirement of Existing Standards," the legacy standards will be retired upon full implementation of PRC-005-2, rather than upon PRC-005-2 becoming effective.**
- **Within "General Considerations," each entity shall be responsible for maintaining each of their Protection System components according to their maintenance program already in place for the legacy standards (PRC-005-1b, PRC-008-0, PRC-011-0, and PRC-017-0) or according to their maintenance program for PRC-005-2, but not both.**

Do you agree with these changes? If not, please provide specific suggestions for changes to the Implementation Plan in the comment area.

Summary Consideration: The commenters largely supported the Implementation Plan, including the changes made at this revision. Several commenters questioned whether the added text within "General Considerations" is necessary, in that it essentially duplicates statements made elsewhere in the Implementation Plan; the drafting team believes that the additional emphasis is useful. No changes were made to the Implementation Plan in response to comments.

Organization	Yes or No	Question 2 Comment
Southern Company	No	The "General Consideration" sentence in question above is superfluous and therefore unnecessary. The instruction provided in the sentence is (repeated and) more clearly stated in the first sentence of the "Retirement of Existing Standards:" section.
Response: Thank you for your comment. The drafting team believes that the modification to the "General Considerations" section of the Implementation Plan adds clarity.		
Western Area Power Administration	No	The logistics of these statements are confusing and need further clarification as to intent and implementation.
Response: Thank you for your comment. The drafting team believes that the implementation plan is clear. The entity should follow the previous maintenance intervals for any specific components until that component is addressed by PRC-005-2. As the		

Organization	Yes or No	Question 2 Comment
transition is occurring, the entity should adjust its maintenance and testing schedule so that they are able to demonstrate that the required percentage of components meet the maintenance intervals given in the PRC-005-2 tables at each of the percent compliant milestones given in this Implementation Plan.		
Tennessee Valley Authority		The intent of this modification is not clear. It could be interpreted as allowing an entity, for any given Protection System component identified in Table 1-1 through Table 1-5, to choose to maintain those components under an existing maintenance program that is compliant with the legacy standards until PRC-005-2 completely retires PRC-005-1b, PRC-008-0, PRC-011-0 and PRC-017-0 (first calendar quarter one hundred fifty-six (156) months following regulatory approval of PRC-005-2). For example, if an entity elects to maintain unmonitored communications system components described in Table 1-2 using its program that is compliant with the legacy standards, when would it have to meet the intervals defined in Table 1-2? The use of "or" under "General Considerations" indicates that compliance with the legacy standards is acceptable until such time that all of the legacy standards are retired.
Response: Thank you for your comment. The drafting team believes that the Implementation Plan is clear. **The entity should follow the previous maintenance intervals for any specific components until that component is addressed by PRC-005-2. As the transition is occurring, the entity should adjust its maintenance and testing schedule so that they are able to demonstrate that the required percentage of components meet the maintenance intervals given in the PRC-005-2 tables at each of the percent compliant milestones given in this Implementation Plan.** **If an entity elects to maintain unmonitored communications system components described in Table 1-2 using its program that is compliant with the legacy standards, it would have to meet the intervals defined in Table 1-2 according to the Implementation Plan for Requirements R3 and R4.**		
ACES Standards Collaborators	Yes	We thank the drafting team for this consideration that will allow early compliance with the new version of the standard. This plan should avoid many of the transitional issues that have occurred with other new versions of standards.
Response: Thank you for your comment.		

Organization	Yes or No	Question 2 Comment
American Electric Power	Yes	We believe the text "Once an entity has designated PRC-005-2 as its maintenance program for specific Protection System components, they cannot revert to the original program for those components" does improve the clarity of the standard.
Response: Thank you for your comment.		
Ameren	Yes	Ameren supports this practical reality.
Response: Thank you for your comment.		
Ingleside Cogeneration LP	Yes	Ingleside Cogeneration LP sees the modifications to the implementation plan as a clarification-only. We had anticipated that auditors will look for evidence that a legacy program remains in place until a specifically-identified transition date. In fact, the project team should consider adding an allowance for entities to adopt PRC-005-2 immediately upon FERC's approval. This may mean in rare cases that maintenance activities and intervals managed in accordance with PRC-005-1b will drop out of the program; but if the industry and regulatory bodies agree that the new program is superior, there is no reliability purpose served by waiting. Furthermore, the maintenance activities will continue anyways - they will just not be subject to auditor review. Unfortunately, NERC Compliance has taken the opposite position for the implementation of the CIP version 4 "bright-line criteria" - which we believe is counter-productive to our shared commitment to reliability. Just as with PRC-005-2, a thorough evaluation showed that the elimination of ambiguity reduces risk to the greater system. It is disingenuous to require outdated standards to remain in place simply to avoid a possibility that a borderline facility remain on the regulatory books.
Response: Thank you for your comments. The drafting team suggests that, in the event that an entity fully implements PRC-005-2 for all components (i.e., has maintained everything according to PRC-005-2) upon regulatory approvals, the entity will have retired PRC-005-1b, PRC-008-0, PRC-011-0, and PRC-17-0 from their program at that time. However, the drafting team believes that the		

Organization	Yes or No	Question 2 Comment
phased Implementation Plan is necessary to avoid any gaps in applicability throughout the maintenance intervals currently in use. Further, to demonstrate continuing compliance, an entity will need evidence that they have been in full compliance with whichever version of the standard was in effect.		
Northeast Power Coordinating Council	Yes	
Southwest Power Pool Reliability Standards Development Team	Yes	
Duke Energy	Yes	
Dominion	Yes	
Chris Searles	Yes	
Florida Municipal Power Agency	Yes	
Luminant	Yes	
Bonneville Power Administration	Yes	
O&M Group	Yes	
Nebraska Public Power District	Yes	
City of Palo Alto	Yes	

Organization	Yes or No	Question 2 Comment
Bridgeport Energy	Yes	
Beaches Energy Services	Yes	
Puget Sound Energy	Yes	
Manitoba Hydro	Yes	
Tacoma Power	Yes	
American Transmission Company	Yes	
Illinois Municipal Electric Agency	Yes	
Idaho Power Company	Yes	
CenterPoint Energy	Yes	
KCP&L/ KCPL-GMO	Yes	
Midtronics Inc	Yes	

3. The SDT made complementary changes in the "Supplementary Reference and FAQ Document" to provide supporting discussion for the Requirements within the standard. Do you have any specific suggestions for further improvements?

Summary Consideration: Commenters offered several suggestions for improvements to the Supplementary Reference and FAQ Document. Punctuation, spelling and content changes have been made to the Supplementary Reference and FAQ Document in response to these suggestions.

Organization	Yes or No	Question 3 Comment
Northeast Power Coordinating Council	No	
Duke Energy	No	
Dominion	No	
Tennessee Valley Authority	No	
Bonneville Power Administration	No	
Nebraska Public Power District	No	
City of Palo Alto	No	
Bridgeport Energy	No	
Puget Sound Energy	No	
Ameren	No	
Ingelside Cogeneration LP	No	

Organization	Yes or No	Question 3 Comment
American Transmission Company	No	
Idaho Power Company	No	
CenterPoint Energy	No	
KCP&L/ KCPL-GMO	No	
Primax Technologies Inc.		In 15.4.1 Frequently Asked Questions, to the question: What did the PSMT SDT mean by "continuity" of the dc supply? One of the proposed methods for ensuring continuity is the following: Specific gravity tests can infer continuity because, without continuity, there could be no charging occurring; and if there is no charging, then specific gravity will go down below acceptable levels. Comment: I agree that the uncharged cell's specific gravity would drop but it would take weeks or months to show. Should power be needed from the battery during this period of time the battery would not be able to perform as it should. To me this an unacceptable risk
Response: Thank you for your comments. The drafting team agrees with you that some methods of detecting continuity are better than others, but the Supplementary Reference and FAQ Document is intended as a general aid to understanding the standard, and not as a strict recommendation of particular maintenance methods. An entity can always do more, or more frequent maintenance if they wish.		
Southwest Power Pool Reliability Standards Development Team	Yes	1. On page 70 of the document we noticed that the word "reakers" was used and would suggest this was intended to be "breakers". 2. Also on page 81 of the document under the section of "My VRLA batteries have multiple-cells within an individual battery jar (or unit); how am I expected to comply with the cell-to-cell ohmic measurement requirements on these units that I cannot get to?" We would suggest that the wording be changed on "in

Organization	Yes or No	Question 3 Comment
		accessible" to remove the space to give you "Inaccessible".
Response: Thank you for your comments. Punctuation, spelling and content changes have been made to the Supplementary Reference and FAQ Document.		
Chris Searles	Yes	1. In Section 7.1-Frequently Asked Questions, pg 24 - add "or" before "other measurements" inadvertently left out. 2. In Section 8.1.2.4 - 4th & 5th sentences. Consider changing the verbiage: "....The Protection System owner may want to follow the guidelines in the applicable IEEE recommended practices for battery maintenance and testing, especially if the battery in question is used for application requirements in addition to the strict protection and control demands covered under this standard." 3. In section 15.4.1 - (pg 74) "What is the State of Charge...." In the first paragraph on page 74, the first complete sentence, I think the intent is to say "For these two types of batteries, and also for VRLA batteries," . . .
Response: Thank you for your comments. Punctuation, spelling and content changes have been made to the Supplementary Reference and FAQ Document.		
ACES Standards Collaborators	Yes	We suggest that the document should clarify Table 1-4(f). We understand from conversations with drafting team members that not all component attributes have to be met for the exclusion to apply. Rather each component attribute only has to be met individually for the exclusion to apply. We appreciate the drafting team including the localized definitions in the supplementary reference document. However, we believe there is still confusion with the use of component. Component is capitalized within the definition but it is not capitalized throughout the document. We believe the term should be capitalized throughout the document to be clear the localized definition applies. Capitalization of most instances of "system" has been correctly removed since the NERC definition was not consistent with the use. However, there are a few instances where it was removed and should not have been. One example occurs in the second paragraph on page 5 in the red-line document

Organization	Yes or No	Question 3 Comment
		where "system collapse" should be "System Collapse". In the third paragraph on page 5 in the red-line document, "transmission" should be capitalized since the NERC definition would be applicable.
Response: Thank you for your comments. Punctuation, spelling and content changes including your suggestions for capitalization have been made to the Supplementary Reference and FAQ Document. Based on your comment regarding Table 1-4(f), an additional FAQ has been added to Section 15.4.1 of the Supplementary Reference and FAQ Document.		
O&M Group	Yes	(1) We do not agree with no maintenance on the battery monitoring system (2) Also, we do not agree with replacing a battery capacity test by evaluating cell/unit measurements indicative of battery performance against station battery baseline.
Response: Thank you for your comments. **1. Thank you for your comment concerning maintenance on the battery monitoring system. Based on comments concerning the battery Component Attributes in table 1-4(f) a new Frequently Asked Question was added to the Supplementary Reference and FAQ Document. As a part of that FAQ the drafting team gave rational why no maintenance on the battery monitoring system is required by stating "the basis of the exclusions granted in the table is that the monitoring devices must incorporate the monitoring capability of microprocessor based components which perform continuous self-monitoring. For failure of the microprocessor device used in dc supply monitoring, the self-checking routine in the microprocessor must generate an alarm which will be reported within 24 hours of device failure to a location where corrective action can be initiated."** **2. Thank you for your comment concerning battery capacity testing. The drafting team agrees that a performance or modified performance capacity test is the only industry recognized method for determining the actual capacity of a battery. However, the maintenance activity required in the tables of PRC-005-2 is to "Verify that the station battery can perform as manufactured" not to determine the capacity of the battery. For many of the lead acid batteries used in BES Protection Systems, the drafting team believes that evaluating cell/unit measurements indicative of battery performance against a station battery baseline is as a valid method of verifying "that the station battery can perform as manufactured." That is why in Tables 1-4(a) and Tables 1-4(b) owners are allowed to do either of the two listed maintenance activities in their appropriate maximum maintenance intervals to "Verify that the station battery can perform as manufactured."**		

Organization	Yes or No	Question 3 Comment
Western Area Power Administration	Yes	Yes. The standard itself should be more clearly written so that a 100+ page Supplementary Reference and FAQ Document is not needed. This document is also not enforceable, nor is it a standard, so verbiage which interprets the standard and forces requirements should be removed.
Response: Thank you for your comments. This document provides supporting discussion, but is not part of the standard. The drafting team intends that it be posted as a reference document, as expressed in Section F of the standard. The standard is to be a terse statement of requirements, etc., and is not to include explanatory information like that included in the Supplementary Reference and FAQ Document.		
American Electric Power	Yes	On page 82, the text “in accessible” should be correct as “inaccessible”.
Response: Thank you for your comments. Punctuation, spelling and content changes have been made to the Supplementary Reference and FAQ Document.		
Manitoba Hydro	Yes	1. Table of Contents - The drawing should be removed from the Table of Contents. 2. Introduction and Summary: [Page 1] - Should include “Canada”. The sentence should read “The standards are mandatory and enforceable in the United States and Canada”. 3. Protection Systems Product Generations: [page 8] - We suggest changing "control Systems" to "control systems".[Page 28]: “Voltage & Current Sensing Device ...” should be “Voltage and current sensing device ...”[Page 29] "Control Circuit" should not be capitalized.[Page 44] A space is missing: “performance formal-performing segments” should be “performance for mal-performing segments”.[Page 45] "Other problems ..." ascribed to batteries may also apply to other Protection System Components, and therefore does not require special mention for batteries. This paragraph should be removed. 4. [Page 67]: Normally-open contacts of relays 94 & 86 should be treated the same as the current-carrying contacts if they are in use.
Response: Thank you for your comments. Punctuation, spelling and content changes have been made to the Supplementary		

Organization	Yes or No	Question 3 Comment
Reference and FAQ Document. Based on your comment, "Canada" was added to the introductory sentence on page 1 of the Supplementary Reference and FAQ Document. In the case of the normally-open contacts of the 94 and 86, entities may perform more maintenance than is listed within the standard.		
Tacoma Power	Yes	1. On page 88, third bullet, change "auxiliary communications equipment" to "associated communications equipment" for consistency. 2. In Figure A-1, what is meant by "Also verify wiring and test switches"? The emphasis of this question is on 'test switches'.
Response: Thank you for your comments. **1. Punctuation, spelling and content changes have been made to the Supplementary Reference and FAQ Document.** **2. The object of any test in any circuit that has test switches is the same as those tests in similar circuits without test switches. There is no specific mandated test in the standard for "Test Switches," but a test switch might well be a point of failure that one needs to be aware of when performing the mandated routine tests.**		
Illinois Municipal Electric Agency	Yes	Please see response to Question 4.
Response: Thank you for your comments.		
Midtronics Inc	Yes	The paragraphs below are from page 83 of the document (page 89 of the pdf). The first paragraph below contains the words, "risen above" and "over" a baseline. For conductance trending would be going below a baseline. Since this is a technical standard I think there should be a comment noting the difference in trending of conductance as compared to resistance and impedance like it is in the next paragraph. For VRLA batteries, there are two drivers for internal ohmic readings. The first driver is for a means to trend battery life. Trending against the baseline of VRLA cells in a battery string is essential to determine the approximate state of health of the battery. Ohmic measurement testing may be used as the mechanism for measuring

Organization	Yes or No	Question 3 Comment
		the battery cells. If all the cells in the string exhibit a consistent trend line and that trend line has not risen above a specific deviation (e.g. 30%) over baseline, then a judgment can be made that the battery is still in a reasonably good state of health and able to 'perform as manufactured.' It is essential that the specific deviation mentioned above is based on data (test or otherwise) that correlates the ohmic readings for a specific battery/tester combination to the health of the battery. This is the intent of the "perform as manufactured six-month test" at Row 4 on Table 1-4b. The second big driver is VRLA batteries tendency for thermal runaway. This is the intent of the "thermal runaway test" at Row 2 on Table 1-4b. In order to detect a cell in thermal runaway, you need not necessarily have a formal trending program. When a single cell/unit changes significantly or significantly varies from the other cells (e.g. a doubling of resistance/impedance or a 50% decrease in conductance), there is a high probability that the cell/unit/string needs to be replaced as soon as possible. In other words, if the battery is 10 years old and all the cells have approached a significant change in ohmic values over baseline, then you have a battery which is approaching end of life. You need to get ready to buy a new battery, but you do not have to worry about an impending catastrophic failure. On the other hand, if the battery is five years old and you have one cell that has a markedly different ohmic reading than all the other cells, then you need to be worried that this cell is in thermal runaway and catastrophic failure is imminent.
Response: Thank you for your comments. Punctuation, spelling and content changes have been made to the Supplementary Reference and FAQ Document. Based on your comment, the sentence was rewritten as follow: "If all the cells in the string exhibit a consistent trend line and that trend line has not risen above a specific deviation (e.g. 30%) over baseline for impedance tests or below baseline for conductance tests, then a judgment can be made that the battery is still in a reasonably good state of health and able to 'perform as manufactured.'"		
Luminant	Yes	
Southern Company	Yes	

4. If you have any other comments that you have NOT provided in response to the above questions, please provide them here. (Please do not repeat comments that you provided elsewhere.)

Summary Consideration: Other than as noted below, no changes were made to the standard in response to comments in Question 4.

Commenters continued to object to Applicability 4.2.1 in contrast to the interpretation in PRC-005-1b. The drafting team explained their position relative to this objection, and added discussion in Section 2.3.1 of the Supplementary Reference and FAQ Document to further explain their position.

Several commenters objected to various VSLs, particularly as it relates to the Lower VSL for Requirement R3. The drafting team explained that the VSLs are established in accordance with the VSL Guidelines. However, a minor editorial change was made to all levels of VSL for Requirement R5.

Several commenters continued to object to inclusion of UFLS and UVLS relays, in that they may not be installed on BES equipment. The drafting team responded that these devices, while not on BES equipment, are installed for the reliability of the BES, and are therefore included. The drafting team further noted that these devices are currently addressed in PRC-008-0 and PRC-011-0.

Several commenters questioned the inclusion of breaker trip coil verification, auxiliary relay verification, and/or lockout relay verification. The drafting team responded that each of these devices needs to be maintained at the prescribed intervals to assure reliability.

A few comments were offered on unresolved maintenance issues, various aspects of battery maintenance, communications system batteries, performance-based maintenance program criteria, and sudden pressure relay dc circuit testing. The drafting team provided responses to each of these comments, explaining the importance of the requirements within the standard.

Organization	Yes or No	Question 4 Comment
Consumers Energy		1. We agree with the purpose in section 3 of the Standard. However, section 4.2.1 expands the scope from "affecting the reliability of the Bulk Electric System" to "detecting Faults on BES Elements". In our opinion, the Applicability should be limited to the stated Purpose. Expanding the scope as is done in 4.2.1 greatly

Organization	Yes or No	Question 4 Comment
		increases the number of Protection Systems covered without an increase in reliability of the BES. We prefer the applicability as expressed in Appendix 1 of PRC-005-1b. 2. We suggest changing "Component Type" in R1.2 to something similar to "Segment" as defined within the Standard. A "Component Type" limits to one of five categories, whereas a "Segment" must share similar attributes.
Response: Thank you for your comments. **1. The drafting team believes the Applicability as stated in PRC-005-2 is correct and supports the reliability of the BES. The SDT observes that the approved interpretation addresses the term, "transmission Protection System," and notes that this term is not used within PRC-005-2; thus, the interpretation does not apply to PRC-005-2. PRC-005-2 specifically addresses: "Protection Systems that are installed for the purpose of detecting faults on BES Elements." The drafting team has added a discussion to Section 2.3.1 of the Supplementary Reference and FAQ Document explaining their intent regarding the Applicability.** **2. In the documentation to support Requirement R1.2, an entity can list different technologies within a Component Type along with their respective monitoring attributes. The drafting team sees no appreciable improvement in the standard with your proposed change, and respectfully declines to modify the standard.**		
Ameren		Ameren supports PRC-005-2 in the interest of BES reliability. We also appreciates the SDT's overall high quality product and looks forward to its implementation; however, we still assert that 1) the zero tolerance approach, in this case involving significantly large number (thousands) of devices, is an impractical requirement, 2) the VRF for R3 should be Medium, and 3) maintenance records for replaced equipment should not be retained. We' have raised these concerns and justified our position repeatedly but yet not convinced the SDT to change their position.
Response: Thank you for your comments. **1. The NERC VSL Guidelines do not allow some level of non-performance without being in violation.**		

Organization	Yes or No	Question 4 Comment
2. The drafting team believes that the assigned VRF is correct, in that that failure to implement and follow its PSMP could cause or contribute to Bulk Electric System instability, separation, or a Cascading sequence of failures. **3. The drafting team believes the Compliance Monitor will need the data for the most recent performance of the maintenance, as well as the data for the preceding maintenance period, to determine compliance. This seems to be consistent with what auditors are expecting (per the drafting team's experience), and is also consistent with Compliance Process Bulletins 2011-001 and 2009-05.**		
Florida Municipal Power Agency		1. Applicability does not align with previously approved interpretation of "transmission Protection System", Appendix 1 of the current V1 standard, that basically says that protection systems applicable to the standard are those that both "detect faults" and "trip" BES equipment. Applicability 4.2.1 says: "Protection Systems that are installed for the purpose of detecting Faults on BES Elements", which does not match "and" relationship of the interpretation. Eliminating this "and" relationship will cause distribution protection to be swept into the standards, such as reverse power relays designed to "detect" faults on the transmission system but "trip" distribution breakers. Distribution is expressly excluded in Section 215 and these types of relays have no impact on BES reliability. 2. Zero defect approach, should move to what CIP v5 is moving towards of internal controls rather than strict 100% compliance, or even better, a Total Quality Management approach. 3. UFLS and UVLS testing - broaches on distribution which is expressly excluded from Section 215 jurisdiction - when discussing control circuit testing, instrument transformer testing, etc.. We believe the requirement should be relay-only testing. We also believe that the incremental benefit is not worth the increased costs, e.g., one UFLS relay not operating has insignificant impact on a UFLS event; whereas one relay not operating to clear a fault has significant impact.
Response: Thank you for your comments. **1. The drafting team believes the Applicability as stated in PRC-005-2 is correct and supports the reliability of the BES. The**		

Organization	Yes or No	Question 4 Comment
		drafting team observes that the approved interpretation addresses the term, "transmission Protection System," and notes that this term is not used within PRC-005-2; thus, the interpretation does not apply to PRC-005-2. PRC-005-2 specifically addresses: "Protection Systems that are installed for the purpose of detecting faults on BES Elements." The drafting team has added a discussion to Section 2.3.1 of the Supplementary Reference and FAQ Document explaining their intent regarding the Applicability. **2. The NERC VSL guidelines do not allow some level of non-performance without being in violation.** **3. FPA Section 215(a) definitions section defines bulk-power system as: "(A) facilities and control systems necessary for operating an interconnected electric energy transmission network (or any portion thereof)." That definition then is limited by a later statement which adds the term bulk-power System: "… does not include facilities used in the local distribution of electric energy." Also, Section 215 also covers users, owners, and operators of bulk-power facilities.** **UFLS and UVLS (when the UVLS is installed to prevent system voltage collapse or voltage instability for BES reliability) are not "used in the local distribution of electric energy," despite their location on local distribution networks. Further, if UFLS/UVLS facilities were not covered by the Reliability Standards, then in order to protect the integrity of the BES during under-frequency or under-voltage events, that load would have to be shed at the transmission bus to ensure the load-generation balance and voltage stability is maintained on the BES.**
Beaches Energy Services		1. Applicability does not align with previously approved interpretation of "Transmission Protection System", Appendix 1 of the current V1 standard, that basically says that protection systems applicable to the standard are those that both "detect faults" and "trip" BES equipment. Applicability 4.2.1 says: "Protection Systems that are installed for the purpose of detecting Faults on BES Elements", which does not match "and" relationship of the interpretation. Eliminating this "and" relationship will cause distribution protection to be swept into the standards, such as reverse power relays designed to "detect" faults on the transmission system but "trip" distribution breakers. Distribution is expressly excluded in Section 215 and these types of relays have no impact on BES reliability. 2. Zero defect approach, should move to what CIP v5 is moving towards of internal controls rather than strict 100% compliance, or even better, a Total Quality

Organization	Yes or No	Question 4 Comment
		Management approach. 3. UFLS and UVLS testing - broaches on distribution which is expressly excluded from Section 215 jurisdiction - when discussing control circuit testing, instrument transformer testing, etc.. We believe the requirement should be relay-only testing. We also believe that the incremental benefit is not worth the increased costs, e.g., one UFLS relay not operating has insignificant impact on a UFLS event; whereas one relay not operating to clear a fault has significant impact.
Response: Thank you for your comments. **1. The drafting team believes the Applicability as stated in PRC-005-2 is correct and supports the reliability of the BES. The drafting team observes that the approved interpretation addresses the term, "transmission Protection System," and notes that this term is not used within PRC-005-2; thus, the interpretation does not apply to PRC-005-2. PRC-005-2 specifically addresses: "Protection Systems that are installed for the purpose of detecting faults on BES Elements." The drafting team has added a discussion to Section 2.3.1 of the Supplementary Reference and FAQ Document explaining their intent regarding the Applicability.** **2. The NERC VSL guidelines do not allow some level of non-performance without being in violation.** **3. FPA Section 215(a) definitions section defines bulk-power system as: "(A) facilities and control systems necessary for operating an interconnected electric energy transmission network (or any portion thereof)." That definition then is limited by a later statement which adds the term bulk-power system: "… does not include facilities used in the local distribution of electric energy." Also, Section 215 also covers users, owners, and operators of bulk-power facilities.** **UFLS and UVLS (when the UVLS is installed to prevent system voltage collapse or voltage instability for BES reliability) are not "used in the local distribution of electric energy," despite their location on local distribution networks. Further, if UFLS/UVLS facilities were not covered by the Reliability Standards, then in order to protect the integrity of the BES during under-frequency or under-voltage events, that load would have to be shed at the transmission bus to ensure the load-generation balance and voltage stability is maintained on the BES.**		
Illinois Municipal Electric Agency		As indicated in previous comments, Illinois Municipal Electric Agency (IMEA) appreciates SDT efforts, and supports the overall refinements in PRC-005-2. However, IMEA respectfully disagrees with the SDT's decision to not resolve the

Organization	Yes or No	Question 4 Comment
		inconsistency between 4.2.1 and the FERC-approved interpretation in PRC-005-1b. Whether the term "transmission Protection System" is used in PRC-005-2, as indicated in the SDT response to our comments, is not the point. The interpretation in PRC-005-1b provides clarity to smaller entities in particular regarding which protective devices need to be factored into compliance with PRC-005 (and other PRC standards). This inconsistency should have been more clearly vetted within the industry given the fact that this was a recently NERC- and FERC-approved Protection System interpretation which was being compromised by the proposed language in 4.2.1. Once again, we find ourselves aiming at a constantly moving compliance target. This issue has the potential to require more DPs to comply with PRC-005, and draw more small entities into registration, which of course would require increased resource expenditures associated with compliance. This issue does not appear to be consistent with NERC and FERC efforts to minimize the impact on smaller entities that have minimal or no potential to impact the BES. If the 4.2.1 language was carefully considered so as not to unnecessarily impact small entities, it would be appreciated that these provisions be more clearly addressed in the "Supplementary Reference and FAQ". Thank you for this opportunity to comment. This issue is significant enough that IMEA felt a Negative vote was unfortunately necessary on an otherwise significant improvement to PRC-005.
Response: Thank you for your comments. **The drafting team believes that the Applicability 4.2.1 as stated in PRC-005-2 is correct and supports the reliability of the BES. The drafting team believes all Protection Systems installed for the purpose of detecting faults on the BES need to be maintained per the requirements of PRC-005-2. The drafting team observes that the approved Interpretation addresses the term, "transmission Protection System," and notes that this term is not used within PRC-005-2; thus, the Interpretation does not apply to PRC-005-2. The drafting team has added a discussion to Section 2.3.1 of the Supplementary Reference and FAQ Document explaining their intent regarding the Applicability.**		
American Transmission Company		ATC recommends that the SDT change the text of "Standard PRC-005-2 - Protection System Maintenance" Table 1-5 on page 24, Row 1, Column 3 to:"Verify that a trip

Organization	Yes or No	Question 4 Comment
		coil is able to operate the circuit breaker, interrupting device, or mitigating device." Or alternately, "Electrically operate each interrupting device every 6 years". Basis for the change: Trip coils are designed to be energized no longer than the breaker opening time (3-5 cycles). They are robust devices that will successfully operate the breaker for 5,000-10,000 electrical operations. In addition, many utilities purchase breakers with dual redundant trip coils to mitigate the possibility of a failure. Interrupting devices with multiple trip coils operate the same mechanism. Therefore, by requiring testing of each trip coil in a redundant system you double the amount of times the system is out of its desired state without increasing the performance of the device. It is well recognized that the most likely source of trip coil failure is the breaker operating mechanism binding, thereby preventing the breaker auxiliary stack from opening and keeping the trip coil energized for too long of a time period. Therefore, trip coil failure is a function of the breaker mechanism failure. Exercising the breakers and circuit switchers is an excellent practice to mitigate the most prevalent cause of breaker failure. ATC would encourage language that would suggest this task be done every 2 years, not to exceed 3 years. Exercising the interrupting devices would help eliminate mechanism binding, reducing the chance that the trip coils are energized too long. The language, as currently written in Table 1-5 row 1, will also have the unintentional effect of changing an entities existing interrupting device maintenance interval (essentially driving interrupting device testing to a less than 6 year cycle).ATC continues to recommend a negative ballot since we believe that the testing of "each" trip coil will result in the increased amount of time the BES is in a less intact system configuration. ATC hopes that the SDT will consider these changes.
Response: Thank you for your comments. The definition of Protection System includes trip coils within the dc control circuitry component, and it is necessary to perform maintenance on all of these devices to assure proper performance. Performance-based maintenance is an option to increase the intervals if the performance of these devices supports those intervals.		
Bonneville Power		BPA appreciates that the Standards Development Team does not believe that communications batteries are included in PRC-005-2 standard. While BPA believes

Organization	Yes or No	Question 4 Comment
Administration		the SDT did not intend to include communications batteries in the standard, this intention is neither captured by the language of the standard nor explicit in the Supplementary Reference and FAQ document. Ambiguity on regulation of communications batteries provides no benefit and comprises a concrete regulatory risk to BPA during an audit. BPA strongly believes that the standard should articulate exactly what types and applications of batteries it means to regulate and which batteries it does not.
Response: Thank you for your comments. The drafting team believes this issue is addressed in the response to FAQ: "Does this standard refer to Station batteries or all batteries; for example, Communications Site Batteries?" in the Supplementary Reference and FAQ Document.		
CenterPoint Energy		CenterPoint Energy recommends that PRC-005-2 include a built-in tolerance and move away from a zero-defect enforcement model. Achieving one-hundred percent schedule and documentation compliance is negatively impacting resources on an industry-wide basis for the sake of the "last one percent" and is not needed to provide an adequate level of BES reliability. Entities should be allowed the opportunity to correct minor deficiencies discovered in the program via customary mitigation activities as part of an internal controls policy and good utility practice instead of via the enforcement channel. One possible avenue for incorporating such a tolerance into the Standard is to establish a threshold for the Lower VSL. For example, the Lower VSL for requirement R3 could state: "For Protection System Components included within a time-based maintenance program, the responsible entity failed to maintain more than 1% but 5% or less of the total Components included within a specific Protection System Component type in accordance with the minimum maintenance activities and maximum maintenance intervals prescribed within Tables 1-1 through 1-5, Table 2, and Table 3.".
Response: Thank you for your comments. The drafting team believes that the assigned VSLs are correct. The SDT believes that failure to implement and follow a PSMP could cause or contribute to Bulk Electric System instability, separation, or a Cascading		

Organization	Yes or No	Question 4 Comment
sequence of failures. Anything less than 100% should be a violation.		
NIPSCO		Comment: Test and maintenance data requirements need to be specific and not open to interpretation. Examples: 1. The number of data points required on an impedance circle graph for a relay calibration versus maximum torque angle only.2. Verification of inputs into microprocessor relay records to include magnitude or is a check box sufficient.
Response: Thank you for your comments. The drafting team believes it has struck the appropriate balance in affording some freedom in applying the standard by Transmission Owners, while minimizing the possibility of adverse auditing interpretations.		
Duke Energy		Duke Energy votes "Negative" because we strongly object to the wording in the Applicability section 4.2.1 which expands the reach of the standard to relaying schemes that detect faults on the BES but which are not intended to provide protection for the BES. Duke Energy's standard protection scheme for dispersed generation at retail stations would become subject to the standard due to the changes in section 4.2.1. These protection schemes are designed to detect faults on the BES, but do not operate BES elements nor do they interrupt network current flow from the BES. The new wording in section 4.2.1 would add significant O&M costs and resource constraints due to the inclusion of protection system devices at retail stations without increasing the reliability of the BES. FERC's September 26, 2011 Order in Docket No. RD11-5 approved NERC's interpretation of PRC-005-1 R1 and R2, stating: "The interpretation clarifies that the Requirements are "applicable to any Protection System that is installed for the purpose of detecting faults on transmission elements (lines, buses, transformers, etc.) identified as being included in the [BES] and trips an interrupting device that interrupts current supplied directly from the BES." This interpretation is consistent with the Commission's understanding that a "transmission Protection System" is installed for the purpose of detecting and isolating faults affecting the reliability of the bulk electric system through the use of current interrupting devices." Duke Energy proposes the following wording for Section 4.2.1: "Protection Systems that are installed for the purpose of protecting BES

Organization	Yes or No	Question 4 Comment
		Elements (lines, buses, transformers, etc.)”.
Response: Thank you for your comments. The drafting team still believes that the Applicability as stated in PRC-005-2 is correct, that it supports the reliability of the BES, and that all Protection Systems installed for the purpose of detecting faults on the BES need to be maintained per the requirements of PRC-005-2. The drafting team observes that the approved Interpretation addresses the term, “transmission Protection System,” and notes that this term is not used within PRC-005-2; thus, the Interpretation does not apply to PRC-005-2. Please see Section 2.3 of the Supplementary Reference and FAQ Document for additional discussion.		
Nebraska Public Power District		1. Keeping records after the end of the audit period does not increase the current reliability of the electric grid. Requiring records to be kept for longer time periods will increase the risk to utilities of making a mistake in their record keeping and receiving a fine due to the zero tolerance policy drafted in the standard. Records beyond the audit period, up to 24 years old, don’t have any effect on the reliability of the current bulk electric system. 2. A key concern is will the reliability of the bulk electric system be affected negatively due to increased risk from human element initiated events as a result of the more frequent functional trip checks that will be required. I suggest there be consideration that the interval for functional tests be moved to the minimum frequency of 12 years to minimize this unknown but present risk. 3. We recommend removing requirement 5. This is adding the requirement for a corrective action program to the standard. Performance metrics should be utilized to measure if a registered entity is correcting maintenance deficiencies in a timely manner. Examples of performance metrics include:-A Countable event has already been defined in the definition of terms, which would cover the need to replace equipment. -The quantity and causes of Misoperations are a direct correlation to good or poor maintenance practices and corrective actions by a utility. -TADS records events which are initiated by failed protection system equipment and would identify utilities with poor corrective action processes.

Organization	Yes or No	Question 4 Comment

Response: Thank you for your comments.

1. **In order that a Compliance Monitor can be assured of compliance, the drafting team believes that the Compliance Monitor will need the data of the most recent performance of the maintenance, as well as the data of the preceding one to validate that entities have been in compliance since the last audit (or currently, since the beginning of mandatory compliance). The drafting team has specified the data retention in the posted standard to establish this level of documentation. This seems to be consistent with what auditors are expecting (per the drafting team's experience), and is also consistent with Compliance Process Bulletins 2011-001 and 2009-05. The entity is urged to assure that data is retained as specified within the standard.**
2. **The drafting team believes that performing these maintenance activities at the specified intervals will benefit the reliability of the BES. The standard does not specify "functional trip tests," but instead requires that various elements of the dc control circuit be verified at various intervals.**
3. **The drafting team respectfully disagrees:**

   it's the drafting team believes that returning Protection System devices to good working order exists currently as a required element of a sound maintenance program subject to the existing Protection System maintenance and testing standard, PRC-005-1. For reference, NERC Compliance Application Notice CAN-0043 (Posted Final 12/30/2011) directs Compliance Enforcement Authorities (CEAs) to "…look for relay test results or field records with annotations such as "as-found" readings or pass/fail results; <u>if failed, then adjustments made. The maintenance record for adjustments may be requested"</u>.

   Management of completion of the identified unresolved maintenance issue is a complex topic that falls outside of the scope of this standard. There can be any number of supply, process and management problems that make setting repair deadlines impossible. The drafting team specifically chose the phrase: "… demonstrate efforts to correct" (with guidance from NERC Staff) because of the concern that many more complex unresolved maintenance issues might require greater than the remaining maintenance interval to resolve (and yet still be a "closed-end process"). For example, a problem might be identified on a VRLA battery during a six-month check. In instances such as one that requires battery replacement as part of the long term resolution, it is highly unlikely that the battery could be replaced in time to meet the six-calendar-month requirement for this maintenance activity. The drafting team does believe corrective actions should be timely, but concludes it would be impossible to postulate all possible remediation projects; and, therefore, impossible to specify bounding time frames for resolution of all possible unresolved maintenance issues or what documentation might be sufficient to provide proof that effective corrective action is being undertaken.

Organization	Yes or No	Question 4 Comment
Manitoba Hydro		1. Manitoba Hydro is maintaining our negative vote based on our previously submitted comments (see comments submitted in the comment period ending on March 28th, 2012. 2. Additionally, Standard PRC-005-2:R3: "minimum maintenance activities" is not specified in the Tables. We suggest removing the word "minimum". 3. R5: It is not clearly stated that the Unresolved Maintenance issues must be identified. As written, only "identified Unresolved Maintenance Issues" are applicable in R5. 4. Measure M1: “responsible entity(s)” is not defined in the standard. The format of examples is inconsistent with the other measures. We suggest replacing "... (such as ... drawings) ..." with "The evidence may include, but is not limited to, manufacturer's specifications or engineering drawings. ...". 5. Evidence Retention: There is no statement in either the requirements or the measures regarding a "dated" PSMP. 6. VSL: a. R3 - "minimum maintenance activities" is not specified in the Tables. We suggest removing the word "minimum". b. R5 - We suggest "identified Unresolved Maintenance Issues" to agree with the wording in R5. 7. Table 1.1: The Maintenance Activities statement "For all unmonitored relays:" is redundant since it is specified in the Component Attributes. 8. Table 3: Voltage and current sensing devices for UFLS or UVLS should be excluded from periodic maintenance if they are connected to microprocessors relays with AC measurements continuously verified with alarming, as provided for voltage and current sensing devices in Table 1-3. 9. The wording "Protection System dc supply for tripping non-BES interrupting devices used only for a UFLS or UVLS system" is unclear. It is unclear if "used only for a UFLS or UVLS system" applies to the "Protection System dc supply" or to the "non-BES interrupting devices". Exclusions in Table 1-4(f) which pertain to verifying dc supply voltage should also apply to the dc supply in Table 3.

Organization	Yes or No	Question 4 Comment
		10. Attachment A a. To maintain the technical justification Item 5: for consistency with Item 4 and the VSL, we suggest changing the wording to “If the Components in a Protection System Segment maintained through a performance-based PSMP experience more than 4% Countable Events, develop, document, and implement an action plan to reduce the Countable Events to no more than 4% of the Segment population within 3 years. b. "Technical Justification: "Other problems ..." [page 7] ascribed to batteries may also apply to other Components, and therefore does not require special mention for batteries. This paragraph should be removed. c. Pages 12 to 13 - The numbering should agree with the standard. d. Item 10 [page 13] - For consistency with the previous item and the VSL, we suggest changing the wording to "If the Components in a Protection System Segment maintained through a performance-based PSMP experience more than 4% Countable Events, develop, document, and implement an action plan to reduce the Countable Events to no more than 4% of the Segment population within 3 years." 11. The bullet “All of the relevant communication system tests still apply” was added in examples 1 and 2 on pages 68 and 69 of the Supplementary Reference and FAQ - Draft PRC0005-2 Protection System Maintenance (JULY 2012) document (SRFAQ). This makes reference to Table 3 (page 26) of the Standard, but Table 3 does not identify communication systems as a Component Attribute. Table 1-2 (Communications Systems) on page 14 of the standard also excludes the UFLS and UVLS equipment on Table 3. Section 15.7, page 91, of the SRFAQ document also states “No maintenance activity is required for associated communication systems for distributed UFLS and distributed UVLS schemes”. I believe that since no communications systems has been identified in Table 3, this bullet cannot be added to the examples identified above in the SRFAQ document. 12. Implementation Plan: Should entities be given a single compliance date for each of the maintenance intervals, and be allowed the flexibility to schedule and

Organization	Yes or No	Question 4 Comment
		complete their maintenance as required while transitioning to the defined time intervals in PRC-002-2. For example, if a maximum maintenance interval is 6 calendar years, should the implementation plan only require that "The entity shall be 100% compliant on the first day of the first calendar quarter 84 months following applicable regulatory approval, or in those jurisdictions where no regulatory approval is required, on the first day of the first calendar quarter 96 months following Board of Trustees adoption."? The existing standard PRC-005-1 already requires protection systems to be maintained as part of a program. Prescribing how an entity must reach full compliance may provide a negligible improvement in reliability, while significantly increasing the compliance burden. PRC-005-2 affects a large number of assets, and proving compliance for prescribed percentages of assets during the transition period may create unnecessary overhead with little added value.

Response: Thank you for your comments.

1. **The drafting team has not changed its position from that expressed in response to the earlier comments.**
2. **Requirement R3 establishes that the maintenance activities specified in the Table are minimum maintenance activities.**
3. **The drafting team believes it is implicit that Unresolved Maintenance issues must be identified.**
4. **The term, "responsible entities" is used throughout NERC standards, and pertains to the applicable entities specified in a particular requirement. The drafting team suggests that the evidence for Measure M1 is sufficiently variable that the term "may include but is not limited to" would not be appropriate.**
5. **The drafting team believes it is self-evident that compliance documents must be dated in order that the time period to which they apply is clear.**
6. **Requirement R3 establishes that the maintenance activities specified in the Table are minimum maintenance activities, and therefore apply to the related VSL. The drafting team has added "identified" to the Requirement R5 VSL table.**
7. **The drafting team believes that the word "unmonitored" is still required for clarity in Table 1-1.**
8. **The drafting team observes that the third row of Table 3 (protective relays) addresses your suggestion.**

Organization	Yes or No	Question 4 Comment
9. The drafting team believes that the wording in Table 3, third row of component attributes is clear and is applicable only to dc supplies used for distributed UFLS and distributed UVLS systems. **10. The drafting team does not believe that your suggested changes improve the standard and declines to make the changes.** **11. The drafting team has modified the Supplementary Reference and FAQ Document to remove the reference to the communication system in these two locations.** **12. The drafting team believes that implementation of the standard according to the milestones established within the Implementation Plan is necessary to establish an effective ongoing Protection System Maintenance Program and to demonstrate a commitment to implementing the new standard.**		
Dominion		Page 11 of the PRC-005-2 redline standard, Version History; Previous versions (i.e. 0, 1, 1a, 1b) need to be included here.
Response: Thank you for your comments. The Version History is intended to capture changes between the last-approved version of the standard and the new standard being proposed.		
ReliabilityFirst		ReliabilityFirst thanks the SDT for changing the maximum time for unmonitored systems within Table 1-2 back to six years. However, RFC continues to believe the language in Requirement R5 ("...shall demonstrate efforts to correct...") is subjective and will be hard to measure. RFC believes at a minimum, the applicable entity should be required to develop a Corrective Action Plan to address the Unresolved Maintenance Issue. Without the formality and burden of a full-fledged Corrective Action Plan, ReliabilityFirst is concerned the identified Unresolved Maintenance Issues may not get resolved or resolved in a timely manner. ReliabilityFirst offers the following modification for consideration: "Each Transmission Owner, Generator Owner, and Distribution Provider shall put in place a Corrective Action Plan to remedy all identified Unresolved Maintenance Issues."
Response: Thank you for your comments. As to demonstrating efforts to address Unresolved Maintenance Issues, the drafting team's intent is to furnish a way for an entity to address Unresolved Maintenance Issues without the formality and burden of a		

Organization	Yes or No	Question 4 Comment
full-fledged Corrective Action Plan.		
Puget Sound Energy		1. Sealed Battery Maintenance: The requirement of impedance testing the batteries every 6 months seems excessive based on our experience. We have been successfully maintaining our sealed cells with impedance testing at 36 months. 2. CT testing on Neutrals: The requirement to verify operation is not possible on the Neutral CT as they don't normally carry current. There should be a clarification that verification of readings can only occur (and is only required) on phase CT's and the neutral CT is excluded. 3. Dual Trip Coil Check: In our experience the requirement to verify operation of both trip coils through a trip is overly burdensome and does not improve the reliability of the system. Testing to verify operation of the output relays, proper tripping of the breaker, and verification of trip coil continuity is sufficient to verify the protective system will operate appropriately. 4. Breaker Failure Relay Testing: In our experience testing of the breaker failure relay up to the relay outputs is sufficient to ensure proper operation. The tripping of the breakers through the coils is maintained through the individual relay maintenance. Requiring clearing of the main bus during maintenance is not practical and may negatively impact the reliability of the Bulk Electric System.
Response: Thank you for your comments. **1. The drafting team believes that the six-month interval is proper for VRLA batteries.** **2. See discussion in Section 8.1.3 of the Supplementary Reference and FAQ Document.** **3. The definition of Protection System includes trip coils within the dc control circuitry component, and it is necessary to perform maintenance on all of these devices to assure proper performance. Performance-based maintenance is an option to increase the intervals if the performance of these devices supports those intervals.** **4. The standard does not require that the bus be cleared for breaker failure relay testing, but does require that the circuitry from the output of breaker failure relays be verified to the intended target (trip coil, lockout relay coil, input to another relay, etc). The use of test switches or trip cutout switches may be used to break the control circuit into manageable portions so the circuitry can be verified using overlapping zones without necessitating that all associated breakers be tripped for each**		

Organization	Yes or No	Question 4 Comment
maintenance activity.		
ACES Standards Collaborators		The drafting team has done an outstanding job refining the standard. Because no standard will ever be perfect, we believe industry and reliability would be best served to move the standard to recirculation ballot at this point. Regarding Requirement R1 VSLs, we continue to believe that missing three component types should not jump to a Severe VSL when missing two is a Moderate VSL. Missing three should be a High VSL.
Response: Thank you for your response. **The drafting team believes that missing three Protection System component types (out of five) meets the definition of a Severe VLS in the VSL Guidelines.**		
City of Palo Alto		These comments supercede the comments submitted earlier by Tom Finch by mistake. Attachment A "Criteria for a Performance-Based Protection System Maintenance Program" requires a minimum segment population of 60 Components in order to justify a PSMP. We feel the 60 component requirement is arbitrary and discriminates against small entities such as Palo Alto which do not have 60 components and may wish to implement a performance-based PSMP. We feel the decision on whether to use a time-based or performance-based PSMP should be made by the Entity and not NERC.
Response: Thank you for your comment. The minimum population of 60 components, as described in Section 9.1 of the Supplemental Reference and FAQ Document, is a statistically-significant sample size to meet the performance goals of the performance-based maintenance program. Section 9.2 of the Supplemental Reference and FAQ Document suggests that small entities may be able to pool their component populations with other small entities to establish a common performance-based maintenance program.		
Tennessee Valley Authority		TVA appreciates the work that the standard drafting team has done on PRC-005-2.

Organization	Yes or No	Question 4 Comment
		As stated in our comments on Draft 3, TVA is concerned with the maximum maintenance interval of 4 calendar months specified for unmonitored communications systems in Table 1-2, and for that reason has voted negative. A longer implementation timeframe is needed for replacement of the unmonitored units.
Response: Thank you for your comments. The drafting team suggests that performance-based maintenance is an option to increase the intervals if the performance of these devices supports those intervals. If an entity's experience is that these components require less-frequent maintenance, a performance-based program in accordance with Requirement R2 and Attachment A is an option.		
Southwest Power Pool Reliability Standards Development Team		We have a concern that the RE would have difficulty in implementation of the phased in approach. We would suggest extensive training for the auditors for this standard and others which have these multi phased approaches to implementation. With this training it would also be beneficial if NERC would hold a webinar to fill in the industry on the training provided to keep everyone on the same page. We would like to also suggest that NERC compliance staff work with the Drafting Team to develop the RSAWs for this standard.
Response: Thank you for your comments. The drafting team believes that implementation of the standard according to the milestones established within the Implementation Plan is necessary to establish an effective ongoing Protection System Maintenance Program and to demonstrate a commitment to implementing the new standard. The drafting team will pass your suggestion for auditor training and webinar on to NERC Compliance staff. The current NERC RSAW development process encourages that NERC staff involve drafting team representatives when developing RSAWs.		
Southern Company		We strongly suggest that the SDT modify the Applicability section to clarify that Sections 4.2.1 thru 4.2.4 apply to transmission and distribution facilities, and that Section 4.2.5 defines the generator owner applicability by making changes similar to these proposed below. Without this distinctive change, there exists an ability to mis-interpret Section 4.2.1 such that auditors may apply this standard to a generation scope wider than is specified in the NERC Statement of Registry Criteria (Rev 5). We

Organization	Yes or No	Question 4 Comment
		propose the following changes to 4.2.1 thru 4.2.4:1) Replace the existing 4.2.1 with "Protection Systems for transmission and distribution Facilities, including:"2) Move the existing 4.2.1 thru 4.2.4 to subparts of the new 4.2.1 as 4.2.1.1, 4.2.1.2, 4.2.1.3, 4.2.1.4.
Response: Thank you for your comments. **Protection Systems that are installed in non-BES facilities for the purpose of detecting faults on the BES are included in this standard. The drafting team intends that Applicability 4.2.1 address non- generator BES elements. The drafting team has added a discussion to Section 2.3.1 of the Supplementary Reference and FAQ Document explaining their intent regarding the Applicability.**		
Western Area Power Administration		Western feels that our comments and concerns as provided on the previous comment form were not adequately addressed. Those comments are repeated below: 1. Western Area Power Administration is appreciative of the hard work done by the SDT and NERC. We respectfully submit our professional opinion that the increased relay testing required by the PRC-005-2 will result in a net degradation to the reliability of the BES due to human hands disturbing working systems. We propose that auxiliary relays be tested at commissioning and anytime the circuits are rewired or redesigned. If there is evidence that the relay has functioned properly in its current configuration then the best practice for ensuring reliability is to leave it alone. 2. The maintenance interval of 6 years for lock-out relay testing is not consistent with 12 year interval of auxiliary relay testing or control circuit testing. No justification is provided for this increased testing interval of lock-out relays versus other electro-mechanical devices. These inconsistent testing intervals, within the same protection control schemes and protective devices, will complicate the industry's Protection System Maintenance Program and cause an increase in maintenance costs. Condition Based Monitoring or Performance Based Monitoring are not allowed on trip coil circuits or lock-out relays. This is inconsistent with current or future technology. Deviation from the 6 year testing

Organization	Yes or No	Question 4 Comment
		interval should be allowed, using CBM or PBM. The Standard should not present a barrier to technology advancements or industry initiatives. The continuous, frequent testing of these devices is detrimental to system reliability. 3. Disagree with testing of the dc control portion of the sudden pressure device as defined by the FAQ. We feel that this device and its wiring were deemed out of scope previously. Do not use the FAQ to modify the standard. The FAQ should strictly be used for clarification only. A standard that relies on a lengthy FAQ and multiple CAN's needs to be re-written concisely and clearly.
Response: Thank you for your comments **1. The drafting team recognizes the risk of human error trips when performing maintenance but believes these risks can be managed. Auxiliary relays must be maintained every 12 years, and may be included within the 12-year unmonitored control circuitry verification. Performance-based maintenance is an option if you want to extend your intervals beyond 12 years.** **2. The drafting team believes that electromechanical lockout relays need periodic operation and that they need to be exercised at the same six-year interval required for electromechanical relays. Performance-based maintenance is an option if you want to extend your intervals beyond six years.** **3. The need to verify the path from the sudden pressure relay trip contact through the auxiliary seal in and through to the lockout relay coil is clearly within the scope of PRC-005-2 as part of the Protection System control circuitry. The sensing element is omitted from PRC-005-2 testing requirements because the drafting team is unaware of industry-recognized activities or intervals for the sensing elements. The drafting team believes that Protection Systems that trip (or can trip) the BES should be included. This position is consistent with the currently-approved PRC-005-1b and consistent with the SAR for Project 2007-17. However, a future revision of PRC-005 will likely add sudden pressure relays in response to directives from FERC Order 758. The Supplementary Reference and FAQ Document provides supporting discussion and clarification but does not modify the standard in any way. The standard is drafted such that the requirements are fully stated; however, the entire field of maintenance of Protection Systems is sufficiently complex that that the drafting team has provided the Supplementary Reference and FAQ Document to share effective methods of meeting the requirements (as anticipated by the drafting team) and to share the drafting team's rationale in establishing the required maximum intervals and minimum activities.**		
O&M Group		None

Organization	Yes or No	Question 4 Comment
Idaho Power Company		None

END OF REPORT

Standard Development Roadmap

This section is maintained by the drafting team during the development of the standard and will be removed when the standard becomes effective.

Development Steps Completed:

1. Standards Committee approved posting SAR and draft standard on August 11, 2011.
2. SAR and draft standard were posted for a 45-day concurrent posting and initial ballot from August 15, 2011 through September 29, 2011.
3. Standard passed the initial ballot with the following results: Quorum - 84.32% and Affirmative - 73.93%.
4. Draft standard was posted for a 30-day concurrent posting and successive ballot from February 28, 2012 through March 28, 2012.
5. Standard passed the successive ballot with the following results: Quorum – 84.32% and Affirmative – 73.93%.
6. Draft standard was posted for a 30-day concurrent posting and successive ballot from May 29, 2012 through June 27, 2012.
7. Standard passed the successive ballot with the following results: Quorum – 79.46% and Affirmative – 79.00%.

Description of Current Draft:
This is the second draft of the Standard. This standard merges previous standards PRC-005-1b, PRC-008-0, PRC-011-0, and PRC-017-0. It also addresses FERC comments from Order 693, and addresses observations from the NERC System Protection and Control Task Force, as presented in *NERC SPCTF Assessment of Standards: PRC-005-1 — Transmission and Generation Protection System Maintenance and Testing, PRC-008-0 — Underfrequency Load Shedding Equipment Maintenance Programs, PRC-011-0 — UVLS System Maintenance and Testing, PRC-017-0 — Special Protection System Maintenance and Testing.*

Future Development Plan:

Anticipated Actions	Anticipated Date
1. Post for combined 30-day comment and successive ballot.	July 2012
2. Drafting Team Responds to Comments	September 2012
3. Conduct recirculation ballot	October 2012
4. BOT Adoption	November 2012

Definitions of Terms Used in Standard

This section includes all newly defined or revised terms used in the proposed standard. Terms already defined in the Reliability Standards Glossary of Terms are not repeated here. New or revised definitions listed below become approved when the proposed standard is approved. When the standard becomes effective, these defined terms will be removed from the individual standard and added to the Glossary.

Protection System Maintenance Program (PSMP) — An ongoing program by which Protection System components are kept in working order and proper operation of malfunctioning components is restored. A maintenance program for a specific component includes one or more of the following activities:

- Verify — Determine that the component is functioning correctly.
- Monitor — Observe the routine in-service operation of the component.
- Test — Apply signals to a component to observe functional performance or output behavior, or to diagnose problems.
- Inspect — Examine for signs of component failure, reduced performance or degradation.
- Calibrate — Adjust the operating threshold or measurement accuracy of a measuring element to meet the intended performance requirement.

Protection System (NERC Board of Trustees Approved Definition)

- Protective relays which respond to electrical quantities,
- Communications systems necessary for correct operation of protective functions,
- Voltage and current sensing devices providing inputs to protective relays,
- Station dc supply associated with protective functions (including station batteries, battery chargers, and non-battery-based dc supply), and
- Control circuitry associated with protective functions through the trip coil(s) of the circuit breakers or other interrupting devices.

The following terms are defined for use only within PRC-005-2, and should remain with the standard upon approval rather than being moved to the Glossary of Terms.

Unresolved Maintenance Issue – A deficiency identified during a maintenance activity that causes the component to not meet the intended performance, cannot be corrected during the maintenance interval, and requires follow-up corrective action.

Segment – Protection Systems or components of a consistent design standard, or a particular model or type from a single manufacturer that typically share other common elements. Consistent performance is expected across the entire population of a Segment. A Segment must contain at least sixty (60) individual components.

Component Type - Any one of the five specific elements of the Protection System definition.

Component – A Component is any individual discrete piece of equipment included in a Protection System, including but not limited to a protective relay or current sensing device. The designation of what constitutes a control circuit Component is dependent upon how an entity performs and tracks the testing of the control circuitry. Some entities test their control circuits on a breaker basis whereas others test their circuitry on a local zone of protection basis. Thus, entities are allowed the latitude to designate their own definitions of control circuit Components. Another example of where the entity has some discretion

on determining what constitutes a single Component is the voltage and current sensing devices, where the entity may choose either to designate a full three-phase set of such devices or a single device as a single Component.

Countable Event – A failure of a Component requiring repair or replacement, any condition discovered during the maintenance activities in Tables 1-1 through 1-5 and Table 3 which requires corrective action or a Misoperation attributed to hardware failure or calibration failure. Misoperations due to product design errors, software errors, relay settings different from specified settings, Protection System Component configuration errors, or Protection System application errors are not included in Countable Events.

A. Introduction

1. Title: **Protection System Maintenance**

2. Number: PRC-005-2

3. Purpose: To document and implement programs for the maintenance of all Protection Systems affecting the reliability of the Bulk Electric System (BES) so that these Protection Systems are kept in working order.

4. Applicability:

4.1. Functional Entities:

4.1.1 Transmission Owner

4.1.2 Generator Owner

4.1.3 Distribution Provider

4.2. Facilities:

4.2.1 Protection Systems that are installed for the purpose of detecting Faults on BES Elements (lines, buses, transformers, etc.)

4.2.2 Protection Systems used for underfrequency load-shedding systems installed per ERO underfrequency load-shedding requirements.

4.2.3 Protection Systems used for undervoltage load-shedding systems installed to prevent system voltage collapse or voltage instability for BES reliability.

4.2.4 Protection Systems installed as a Special Protection System (SPS) for BES reliability.

4.2.5 Protection Systems for generator Facilities that are part of the BES, including:

4.2.5.1 Protection Systems that act to trip the generator either directly or via lockout or auxiliary tripping relays.

4.2.5.2 Protection Systems for generator step-up transformers for generators that are part of the BES.

4.2.5.3 Protection Systems for transformers connecting aggregated generation, where the aggregated generation is part of the BES (e.g., transformers connecting facilities such as wind-farms to the BES).

4.2.5.4 Protection Systems for station service or excitation transformers connected to the generator bus of generators which are part of the BES, that act to trip the generator either directly or via lockout or tripping auxiliary relays.

5. Effective Date: See Implementation Plan

B. Requirements

R1. Each Transmission Owner, Generator Owner, and Distribution Provider shall establish a Protection System Maintenance Program (PSMP) for its Protection Systems identified in Section 4.2. *[Violation Risk Factor: Medium] [Time Horizon: Operations Planning]*

The PSMP shall:

1.1. Identify which maintenance method (time-based, performance-based per PRC-005 Attachment A, or a combination) is used to address each Protection System Component Type. All batteries associated with the station dc supply Component Type of a Protection System shall be included in a time-based program as described in Table 1-4 and Table 3.

> ***Component Type*** *- Any one of the five specific elements of the Protection System definition.*

1.2. Include the applicable monitored Component attributes applied to each Protection System Component Type consistent with the maintenance intervals specified in Tables 1-1 through 1-5, Table 2, and Table 3 where monitoring is used to extend the maintenance intervals beyond those specified for unmonitored Protection System Components.

> **Component** – *A component is any individual discrete piece of equipment included in a Protection System, including but not limited to a protective relay or current sensing device. The designation of what constitutes a control circuit component is very dependent upon how an entity performs and tracks the testing of the control circuitry. Some entities test their control circuits on a breaker basis whereas others test their circuitry on a local zone of protection basis. Thus, entities are allowed the latitude to designate their own definitions of control circuit components. Another example of where the entity has some discretion on determining what constitutes a single component is the voltage and current sensing devices, where the entity may choose either to designate a full three-phase set of such devices or a single device as a single component.*

R2. Each Transmission Owner, Generator Owner, and Distribution Provider that uses performance-based maintenance intervals in its PSMP shall follow the procedure established in PRC-005 Attachment A to establish and maintain its performance-based intervals. *[Violation Risk Factor: Medium] [Time Horizon: Operations Planning]*

R3. Each Transmission Owner, Generator Owner, and Distribution Provider that utilizes time-based maintenance program(s) shall maintain its Protection System Components that are included within the time-based maintenance program in accordance with the minimum maintenance activities and maximum maintenance intervals prescribed within Tables 1-1 through 1-5, Table 2, and Table 3. *[Violation Risk Factor: High] [Time Horizon: Operations Planning]*

R4. Each Transmission Owner, Generator Owner, and Distribution Provider that utilizes performance-based maintenance program(s) in accordance with Requirement R2 shall implement and follow its PSMP for its Protection System Components that are included within the performance-based program(s). *[Violation Risk Factor: High] [Time Horizon: Operations Planning]*

R5. Each Transmission Owner, Generator Owner, and Distribution Provider shall demonstrate efforts to correct identified Unresolved Maintenance Issues. *[Violation Risk Factor: Medium] [Time Horizon: Operations Planning]*

> ***Unresolved Maintenance Issue*** *- A deficiency identified during a maintenance activity that causes the component to not meet the intended performance, cannot be corrected during the maintenance interval, and requires follow-up corrective action.*

C. Measures

M1. Each Transmission Owner, Generator Owner and Distribution Provider shall have a documented Protection System Maintenance Program in accordance with Requirement R1.

For each Protection System Component Type, the documentation shall include the type of maintenance method applied (time-based, performance-based, or a combination of these maintenance methods), and shall include all batteries associated with the station dc supply Component Types in a time-based program as described in Table 1-4 and Table 3. (Part 1.1)

For Component Types that use monitoring to extend the maintenance intervals, the responsible entity(s) shall have evidence for each protection Component Type (such as manufacturer's specifications or engineering drawings) of the appropriate monitored Component attributes as specified in Tables 1-1 through 1-5, Table 2, and Table 3. (Part 1.2)

M2. Each Transmission Owner, Generator Owner, and Distribution Provider that uses performance-based maintenance intervals shall have evidence that its current performance-based maintenance program(s) is in accordance with Requirement R2, which may include but is not limited to Component lists, dated maintenance records, and dated analysis records and results.

M3. Each Transmission Owner, Generator Owner, and Distribution Provider that utilizes time-based maintenance program(s) shall have evidence that it has maintained its Protection System Components included within its time-based program in accordance with Requirement R3. The evidence may include but is not limited to dated maintenance records, dated maintenance summaries, dated check-off lists, dated inspection records, or dated work orders.

M4. Each Transmission Owner, Generator Owner, and Distribution Provider that utilizes performance-based maintenance intervals in accordance with Requirement R2 shall have evidence that it has implemented the Protection System Maintenance Program for the Protection System Components included in its performance-based program in accordance with Requirement R4. The evidence may include but is not limited to dated maintenance records, dated maintenance summaries, dated check-off lists, dated inspection records, or dated work orders.

M5. Each Transmission Owner, Generator Owner, and Distribution Provider shall have evidence that it has undertaken efforts to correct identified Unresolved Maintenance Issues in accordance with Requirement R5. The evidence may include but is not limited to work orders, replacement Component orders, invoices, project schedules with completed milestones, return material authorizations (RMAs) or purchase orders.

D. Compliance

1. Compliance Monitoring Process

1.1. Compliance Enforcement Authority

Regional Entity

1.2. Compliance Monitoring and Enforcement Processes:

Compliance Audit

Self-Certification

Spot Checking

Compliance Investigation

Self-Reporting

Complaint

1.3. Evidence Retention

The following evidence retention periods identify the period of time an entity is required to retain specific evidence to demonstrate compliance. For instances where the evidence retention period specified below is shorter than the time since the last audit, the Compliance Enforcement Authority may ask an entity to provide other evidence to show that it was compliant for the full time period since the last audit.

The Transmission Owner, Generator Owner, and Distribution Provider shall each keep data or evidence to show compliance as identified below unless directed by its Compliance Enforcement Authority to retain specific evidence for a longer period of time as part of an investigation.

For Requirement R1, the Transmission Owner, Generator Owner, and Distribution Provider shall each keep its current dated Protection System Maintenance Program, as well as any superseded versions since the preceding compliance audit, including the documentation that specifies the type of maintenance program applied for each Protection System Component Type.

For Requirement R2, Requirement R3, Requirement R4, and Requirement R5, the Transmission Owner, Generator Owner, and Distribution Provider shall each keep documentation of the two most recent performances of each distinct maintenance activity for the Protection System Component, or all performances of each distinct maintenance activity for the Protection System Component since the previous scheduled audit date, whichever is longer.

The Compliance Enforcement Authority shall keep the last audit records and all requested and submitted subsequent audit records.

1.4. Additional Compliance Information

None.

2. Violation Severity Levels

Requirement Number	Lower VSL	Moderate VSL	High VSL	Severe VSL
R1	The responsible entity's PSMP failed to specify whether one Component Type is being addressed by time-based or performance-based maintenance, or a combination of both. (Part 1.1) OR The responsible entity's PSMP failed to include applicable station batteries in a time-based program. (Part 1.1)	The responsible entity's PSMP failed to specify whether two Component Types are being addressed by time-based or performance-based maintenance, or a combination of both. (Part 1.1)	The responsible entity's PSMP failed to include the applicable monitoring attributes applied to each Protection System Component Type consistent with the maintenance intervals specified in Tables 1-1 through 1-5, Table 2, and Table 3 where monitoring is used to extend the maintenance intervals beyond those specified for unmonitored Protection System Components. (Part 1.2).	The responsible entity failed to establish a PSMP. OR The responsible entity failed to specify whether three or more Component Types are being addressed by time-based or performance-based maintenance, or a combination of both. (Part 1.1).
R2	The responsible entity uses performance-based maintenance intervals in its PSMP but failed to reduce Countable Events to no more than 4% within three years.	NA	The responsible entity uses performance-based maintenance intervals in its PSMP but failed to reduce Countable Events to no more than 4% within four years.	The responsible entity uses performance-based maintenance intervals in its PSMP but: 1) Failed to establish the technical justification described within Requirement R2 for the initial use of the performance-based PSMP OR 2) Failed to reduce Countable Events to no more than 4% within five years OR 3) Maintained a Segment with less than 60 Components OR 4) Failed to: • Annually update the list of Components, OR

Requirement Number	Lower VSL	Moderate VSL	High VSL	Severe VSL
				• Annually perform maintenance on the greater of 5% of the segment population or 3 Components, OR • Annually analyze the program activities and results for each Segment.
R3	For Protection System Components included within a time-based maintenance program, the responsible entity failed to maintain 5% or less of the total Components included within a specific Protection System Component Type, in accordance with the minimum maintenance activities and maximum maintenance intervals prescribed within Tables 1-1 through 1-5, Table 2, and Table 3.	For Protection System Components included within a time-based maintenance program, the responsible entity failed to maintain more than 5% but 10% or less of the total Components included within a specific Protection System Component Type, in accordance with the minimum maintenance activities and maximum maintenance intervals prescribed within Tables 1-1 through 1-5, Table 2, and Table 3.	For Protection System Components included within a time-based maintenance program, the responsible entity failed to maintain more than 10% but 15% or less of the total Components included within a specific Protection System Component Type, in accordance with the minimum maintenance activities and maximum maintenance intervals prescribed within Tables 1-1 through 1-5, Table 2, and Table 3.	For Protection System Components included within a time-based maintenance program, the responsible entity failed to maintain more than 15% of the total Components included within a specific Protection System Component Type, in accordance with the minimum maintenance activities and maximum maintenance intervals prescribed within Tables 1-1 through 1-5, Table 2, and Table 3.
R4	For Protection System Components included within a performance-based maintenance program, the responsible entity failed to maintain 5% or less of the annual scheduled maintenance for a specific Protection System Component Type in accordance with their performance-based PSMP.	For Protection System Components included within a performance-based maintenance program, the responsible entity failed to maintain more than 5% but 10% or less of the annual scheduled maintenance for a specific Protection System Component Type in accordance with their performance-based PSMP.	For Protection System Components included within a performance-based maintenance program, the responsible entity failed to maintain more than 10% but 15% or less of the annual scheduled maintenance for a specific Protection System Component Type in accordance with their performance-based PSMP.	For Protection System Components included within a performance-based maintenance program, the responsible entity failed to maintain more than 15% of the annual scheduled maintenance for a specific Protection System Component Type in accordance with their performance-based PSMP.
R5	The responsible entity failed to undertake efforts to correct 5 or fewer identified Unresolved	The responsible entity failed to undertake efforts to correct greater than 5, but less than or equal to 10	The responsible entity failed to undertake efforts to correct greater than 10, but less than or equal to 15	The responsible entity failed to undertake efforts to correct greater than 15 identified Unresolved

Requirement Number	Lower VSL	Moderate VSL	High VSL	Severe VSL
	Maintenance Issues.	identified Unresolved Maintenance Issues.	identified Unresolved Maintenance Issues.	Maintenance Issues.

E. Regional Variances

None

F. Supplemental Reference Document

The following documents present a detailed discussion about determination of maintenance intervals and other useful information regarding establishment of a maintenance program.

1. PRC-005-2 Protection System Maintenance Supplementary Reference and FAQ — July 2012.

Version History

Version	Date	Action	Change Tracking
2	TBD	Complete revision, absorbing maintenance requirements from PRC-005-1b, PRC-008-0, PRC-011-0, PRC-017-0	Complete revision

Table 1-1 Component Type - Protective Relay Excluding distributed UFLS and distributed UVLS (see Table 3)		
Component Attributes	**Maximum Maintenance Interval**[1]	**Maintenance Activities**
Any unmonitored protective relay not having all the monitoring attributes of a category below.	6 calendar years	For all unmonitored relays: • Verify that settings are as specified For non-microprocessor relays: • Test and, if necessary calibrate For microprocessor relays: • Verify operation of the relay inputs and outputs that are essential to proper functioning of the Protection System. • Verify acceptable measurement of power system input values.
Monitored microprocessor protective relay with the following: • Internal self-diagnosis and alarming (see Table 2). • Voltage and/or current waveform sampling three or more times per power cycle, and conversion of samples to numeric values for measurement calculations by microprocessor electronics. • Alarming for power supply failure (see Table 2).	12 calendar years	Verify: • Settings are as specified. • Operation of the relay inputs and outputs that are essential to proper functioning of the Protection System. • Acceptable measurement of power system input values.

[1] For the tables in this standard, a calendar year starts on the first day of a new year (January 1) after a maintenance activity has been completed. For the tables in this standard, a calendar month starts on the first day of the first month after a maintenance activity has been completed.

Table 1-1 Component Type - Protective Relay Excluding distributed UFLS and distributed UVLS (see Table 3)		
Component Attributes	**Maximum Maintenance Interval[1]**	**Maintenance Activities**
Monitored microprocessor protective relay with preceding row attributes and the following: • Ac measurements are continuously verified by comparison to an independent ac measurement source, with alarming for excessive error (See Table 2). • Some or all binary or status inputs and control outputs are monitored by a process that continuously demonstrates ability to perform as designed, with alarming for failure (See Table 2). • Alarming for change of settings (See Table 2).	12 calendar years	Verify only the unmonitored relay inputs and outputs that are essential to proper functioning of the Protection System.

Table 1-2 Component Type - Communications Systems Excluding distributed UFLS and distributed UVLS (see Table 3)		
Component Attributes	**Maximum Maintenance Interval**	**Maintenance Activities**
Any unmonitored communications system necessary for correct operation of protective functions, and not having all the monitoring attributes of a category below.	4 calendar months	Verify that the communications system is functional.
	6 calendar years	Verify that the communications system meets performance criteria pertinent to the communications technology applied (e.g. signal level, reflected power, or data error rate). Verify operation of communications system inputs and outputs that are essential to proper functioning of the Protection System.
Any communications system with continuous monitoring or periodic automated testing for the presence of the channel function, and alarming for loss of function (See Table 2).	12 calendar years	Verify that the communications system meets performance criteria pertinent to the communications technology applied (e.g. signal level, reflected power, or data error rate). Verify operation of communications system inputs and outputs that are essential to proper functioning of the Protection System.
Any communications system with all of the following: • Continuous monitoring or periodic automated testing for the performance of the channel using criteria pertinent to the communications technology applied (e.g. signal level, reflected power, or data error rate, and alarming for excessive performance degradation). (See Table 2) • Some or all binary or status inputs and control outputs are monitored by a process that continuously demonstrates ability to perform as designed, with alarming for failure (See Table 2).	12 calendar years	Verify only the unmonitored communications system inputs and outputs that are essential to proper functioning of the Protection System

Table 1-3 Component Type - Voltage and Current Sensing Devices Providing Inputs to Protective Relays Excluding distributed UFLS and distributed UVLS (see Table 3)		
Component Attributes	**Maximum Maintenance Interval**	**Maintenance Activities**
Any voltage and current sensing devices not having monitoring attributes of the category below.	12 calendar years	Verify that current and voltage signal values are provided to the protective relays.
Voltage and Current Sensing devices connected to microprocessor relays with AC measurements are continuously verified by comparison of sensing input value, as measured by the microprocessor relay, to an independent ac measurement source, with alarming for unacceptable error or failure (see Table 2).	No periodic maintenance specified	None.

Table 1-4(a) Component Type – Protection System Station dc Supply Using Vented Lead-Acid (VLA) Batteries Excluding distributed UFLS and distributed UVLS (see Table 3) Protection System Station dc supply used only for non-BES interrupting devices for SPS, non-distributed UFLS systems, or non-distributed UVLS systems is excluded (see Table 1-4(e)).		
Component Attributes	**Maximum Maintenance Interval**	**Maintenance Activities**
Protection System Station dc supply using **Vented Lead-Acid (VLA) batteries** not having monitoring attributes of Table 1-4(f).	4 Calendar Months	Verify: • Station dc supply voltage Inspect: • Electrolyte level • For unintentional grounds
	18 Calendar Months	Verify: • Float voltage of battery charger • Battery continuity • Battery terminal connection resistance • Battery intercell or unit-to-unit connection resistance Inspect: • Cell condition of all individual battery cells where cells are visible – or measure battery cell/unit internal ohmic values where the cells are not visible • Physical condition of battery rack

Table 1-4(a) Component Type – Protection System Station dc Supply Using Vented Lead-Acid (VLA) Batteries Excluding distributed UFLS and distributed UVLS (see Table 3) Protection System Station dc supply used only for non-BES interrupting devices for SPS, non-distributed UFLS systems, or non-distributed UVLS systems is excluded (see Table 1-4(e)).		
Component Attributes	**Maximum Maintenance Interval**	**Maintenance Activities**
	18 Calendar Months -or- 6 Calendar Years	Verify that the station battery can perform as manufactured by evaluating cell/unit measurements indicative of battery performance (e.g. internal ohmic values or float current) against the station battery baseline. -or- Verify that the station battery can perform as manufactured by conducting a performance or modified performance capacity test of the entire battery bank.

Table 1-4(b) Component Type – Protection System Station dc Supply Using Valve-Regulated Lead-Acid (VRLA) Batteries Excluding distributed UFLS and distributed UVLS (see Table 3) Protection System Station dc supply used only for non-BES interrupting devices for SPS, non-distributed UFLS systems, or non-distributed UVLS systems is excluded (see Table 1-4(e)).		
Component Attributes	**Maximum Maintenance Interval**	**Maintenance Activities**
Protection System Station dc supply **with Valve Regulated Lead-Acid (VRLA) batteries** not having monitoring attributes of Table 1-4(f).	4 Calendar Months	Verify: • Station dc supply voltage Inspect: • For unintentional grounds
	6 Calendar Months	Inspect: • Condition of all individual units by measuring battery cell/unit internal ohmic values.
	18 Calendar Months	Verify: • Float voltage of battery charger • Battery continuity • Battery terminal connection resistance • Battery intercell or unit-to-unit connection resistance Inspect: • Physical condition of battery rack

Table 1-4(b) Component Type – Protection System Station dc Supply Using Valve-Regulated Lead-Acid (VRLA) Batteries Excluding distributed UFLS and distributed UVLS (see Table 3) Protection System Station dc supply used only for non-BES interrupting devices for SPS, non-distributed UFLS systems, or non-distributed UVLS systems is excluded (see Table 1-4(e)).		
Component Attributes	**Maximum Maintenance Interval**	**Maintenance Activities**
	6 Calendar Months -or- 3 Calendar Years	Verify that the station battery can perform as manufactured by evaluating cell/unit measurements indicative of battery performance (e.g. internal ohmic values or float current) against the station battery baseline. -or- Verify that the station battery can perform as manufactured by conducting a performance or modified performance capacity test of the entire battery bank.

Table 1-4(c) Component Type – Protection System Station dc Supply Using Nickel-Cadmium (NiCad) Batteries Excluding distributed UFLS and distributed UVLS (see Table 3) Protection System Station dc supply used only for non-BES interrupting devices for SPS, non-distributed UFLS system, or non-distributed UVLS systems is excluded (see Table 1-4(e)).		
Component Attributes	**Maximum Maintenance Interval**	**Maintenance Activities**
Protection System Station dc supply **Nickel-Cadmium (NiCad) batteries** not having monitoring attributes of Table 1-4(f).	4 Calendar Months	Verify: • Station dc supply voltage Inspect: • Electrolyte level • For unintentional grounds
	18 Calendar Months	Verify: • Float voltage of battery charger • Battery continuity • Battery terminal connection resistance • Battery intercell or unit-to-unit connection resistance Inspect: • Cell condition of all individual battery cells. • Physical condition of battery rack
	6 Calendar Years	Verify that the station battery can perform as manufactured by conducting a performance or modified performance capacity test of the entire battery bank.

Table 1-4(d) Component Type – Protection System Station dc Supply Using Non Battery Based Energy Storage Excluding distributed UFLS and distributed UVLS (see Table 3) Protection System Station dc supply used only for non-BES interrupting devices for SPS, non-distributed UFLS system, or non-distributed UVLS systems is excluded (see Table 1-4(e)).		
Component Attributes	**Maximum Maintenance Interval**	**Maintenance Activities**
Any Protection System station dc supply not using a battery and not having monitoring attributes of Table 1-4(f).	4 Calendar Months	Verify: • Station dc supply voltage Inspect: • For unintentional grounds
	18 Calendar Months	Inspect: Condition of non-battery based dc supply
	6 Calendar Years	Verify that the dc supply can perform as manufactured when ac power is not present.

Table 1-4(e) Component Type – Protection System Station dc Supply for non-BES Interrupting Devices for SPS, non-distributed UFLS, and non-distributed UVLS systems		
Component Attributes	**Maximum Maintenance Interval**	**Maintenance Activities**
Any Protection System dc supply used for tripping only non-BES interrupting devices as part of a SPS, non-distributed UFLS, or non-distributed UVLS system and not having monitoring attributes of Table 1-4(f).	When control circuits are verified (See Table 1-5)	Verify Station dc supply voltage.

Table 1-4(f) Exclusions for Protection System Station dc Supply Monitoring Devices and Systems		
Component Attributes	**Maximum Maintenance Interval**	**Maintenance Activities**
Any station dc supply with high and low voltage monitoring and alarming of the battery charger voltage to detect charger overvoltage and charger failure (See Table 2).	No periodic maintenance specified	No periodic verification of station dc supply voltage is required.
Any battery based station dc supply with electrolyte level monitoring and alarming in every cell (See Table 2).		No periodic inspection of the electrolyte level for each cell is required.
Any station dc supply with unintentional dc ground monitoring and alarming (See Table 2).		No periodic inspection of unintentional dc grounds is required.
Any station dc supply with charger float voltage monitoring and alarming to ensure correct float voltage is being applied on the station dc supply (See Table 2).		No periodic verification of float voltage of battery charger is required.
Any battery based station dc supply with monitoring and alarming of battery string continuity (See Table 2).		No periodic verification of the battery continuity is required.
Any battery based station dc supply with monitoring and alarming of the intercell and/or terminal connection detail resistance of the entire battery (See Table 2).		No periodic verification of the intercell and terminal connection resistance is required.
Any Valve Regulated Lead-Acid (VRLA) or Vented Lead-Acid (VLA) station battery with internal ohmic value or float current monitoring and alarming, and evaluating present values relative to baseline internal ohmic values for every cell/unit (See Table 2).		No periodic evaluation relative to baseline of battery cell/unit measurements indicative of battery performance is required to verify the station battery can perform as manufactured.
Any Valve Regulated Lead-Acid (VRLA) or Vented Lead-Acid (VLA) station battery with monitoring and alarming of each cell/unit internal ohmic value (See Table 2).		No periodic inspection of the condition of all individual units by measuring battery cell/unit internal ohmic values of a station VRLA or Vented Lead-Acid (VLA) battery is required.

Table 1-5 Component Type - Control Circuitry Associated With Protective Functions Excluding distributed UFLS and distributed UVLS (see Table 3) **Note:** Table requirements apply to all Control Circuitry Components of Protection Systems, and SPSs except as noted.		
Component Attributes	**Maximum Maintenance Interval**	**Maintenance Activities**
Trip coils or actuators of circuit breakers, interrupting devices, or mitigating devices (regardless of any monitoring of the control circuitry).	6 calendar years	Verify that each trip coil is able to operate the circuit breaker, interrupting device, or mitigating device.
Electromechanical lockout devices which are directly in a trip path from the protective relay to the interrupting device trip coil (regardless of any monitoring of the control circuitry).	6 calendar years	Verify electrical operation of electromechanical lockout devices.
Unmonitored control circuitry associated with SPS.	12 calendar years	Verify all paths of the control circuits essential for proper operation of the SPS.
Unmonitored control circuitry associated with protective functions inclusive of all auxiliary relays.	12 calendar years	Verify all paths of the trip circuits inclusive of all auxiliary relays through the trip coil(s) of the circuit breakers or other interrupting devices.
Control circuitry associated with protective functions and/or SPS whose integrity is monitored and alarmed (See Table 2).	No periodic maintenance specified	None.

Table 2 – Alarming Paths and Monitoring In Tables 1-1 through 1-5 and Table 3, alarm attributes used to justify extended maximum maintenance intervals and/or reduced maintenance activities are subject to the following maintenance requirements		
Component Attributes	**Maximum Maintenance Interval**	**Maintenance Activities**
Any alarm path through which alarms in Tables 1-1 through 1-5 and Table 3 are conveyed from the alarm origin to the location where corrective action can be initiated, and not having all the attributes of the "Alarm Path with monitoring" category below. Alarms are reported within 24 hours of detection to a location where corrective action can be initiated.	12 Calendar Years	Verify that the alarm path conveys alarm signals to a location where corrective action can be initiated.
Alarm Path with monitoring: The location where corrective action is taken receives an alarm within 24 hours for failure of any portion of the alarming path from the alarm origin to the location where corrective action can be initiated.	No periodic maintenance specified	None.

Table 3 Maintenance Activities and Intervals for distributed UFLS and distributed UVLS Systems		
Component Attributes	**Maximum Maintenance Interval**	**Maintenance Activities**
Any unmonitored protective relay not having all the monitoring attributes of a category below.	6 calendar years	Verify that settings are as specified For non-microprocessor relays: • Test and, if necessary calibrate For microprocessor relays: • Verify operation of the relay inputs and outputs that are essential to proper functioning of the Protection System. • Verify acceptable measurement of power system input values.
Monitored microprocessor protective relay with the following: • Internal self diagnosis and alarming (See Table 2). • Voltage and/or current waveform sampling three or more times per power cycle, and conversion of samples to numeric values for measurement calculations by microprocessor electronics. Alarming for power supply failure (See Table 2).	12 calendar years	Verify: • Settings are as specified. • Operation of the relay inputs and outputs that are essential to proper functioning of the Protection System. • Acceptable measurement of power system input values
Monitored microprocessor protective relay with preceding row attributes and the following: • Ac measurements are continuously verified by comparison to an independent ac measurement source, with alarming for excessive error (See Table 2). • Some or all binary or status inputs and control outputs are monitored by a process that continuously demonstrates ability to perform as designed, with alarming for failure (See Table 2).	12 calendar years	Verify only the unmonitored relay inputs and outputs that are essential to proper functioning of the Protection System.

Table 3 Maintenance Activities and Intervals for distributed UFLS and distributed UVLS Systems		
Component Attributes	**Maximum Maintenance Interval**	**Maintenance Activities**
Alarming for change of settings (See Table 2).		
Voltage and/or current sensing devices associated with UFLS or UVLS systems.	12 calendar years	Verify that current and/or voltage signal values are provided to the protective relays.
Protection System dc supply for tripping non-BES interrupting devices used only for a UFLS or UVLS system.	12 calendar years	Verify Protection System dc supply voltage.
Control circuitry between the UFLS or UVLS relays and electromechanical lockout and/or tripping auxiliary devices (excludes non-BES interrupting device trip coils).	12 calendar years	Verify the path from the relay to the lockout and/or tripping auxiliary relay (including essential supervisory logic).
Electromechanical lockout and/or tripping auxiliary devices associated only with UFLS or UVLS systems (excludes non-BES interrupting device trip coils).	12 calendar years	Verify electrical operation of electromechanical lockout and/or tripping auxiliary devices.
Control circuitry between the electromechanical lockout and/or tripping auxiliary devices and the non-BES interrupting devices in UFLS or UVLS systems, or between UFLS or UVLS relays (with no interposing electromechanical lockout or auxiliary device) and the non-BES interrupting devices (excludes non-BES interrupting device trip coils).	No periodic maintenance specified	None.
Trip coils of non-BES interrupting devices in UFLS or UVLS systems.	No periodic maintenance specified	None.

PRC-005 — Attachment A

Criteria for a Performance-Based Protection System Maintenance Program

Purpose: To establish a technical basis for initial and continued use of a performance-based Protection System Maintenance Program (PSMP).

To establish the technical justification for the initial use of a performance-based PSMP:

1. Develop a list with a description of Components included in each designated Segment of the Protection System Component population, with a minimum **Segment** population of 60 Components.
2. Maintain the Components in each Segment according to the time-based maximum allowable intervals established in Tables 1-1 through 1-5 and Table 3 until results of maintenance activities for the Segment are available for a minimum of 30 individual Components of the Segment.

> **Segment** – *Protection Systems or components of a consistent design standard, or a particular model or type from a single manufacturer that typically share other common elements. Consistent performance is expected across the entire population of a Segment. A Segment must contain at least sixty (60) individual components.*

3. Document the maintenance program activities and results for each Segment, including maintenance dates and Countable Events for each included Component.
4. Analyze the maintenance program activities and results for each Segment to determine the overall performance of the Segment and develop maintenance intervals.
5. Determine the maximum allowable maintenance interval for each Segment such that the Segment experiences **Countable Events** on no more than 4% of the Components within the Segment, for the greater of either the last 30 Components maintained or all Components maintained in the previous year.

> **Countable Event** – *A failure of a component requiring repair or replacement, any condition discovered during the maintenance activities in Tables 1-1 through 1-5 and Table 3 which requires corrective action, or a Misoperation attributed to hardware failure or calibration failure. Misoperations due to product design errors, software errors, relay settings different from specified settings, Protection System component configuration errors, or Protection System application errors are not included in Countable Events.*

To maintain the technical justification for the ongoing use of a performance-based PSMP:

1. At least annually, update the list of Protection System Components and Segments and/or description if any changes occur within the Segment.
2. Perform maintenance on the greater of 5% of the Components (addressed in the performance based PSMP) in each Segment or 3 individual Components within the Segment in each year.
3. For the prior year, analyze the maintenance program activities and results for each Segment to determine the overall performance of the Segment.

4. Using the prior year's data, determine the maximum allowable maintenance interval for each Segment such that the Segment experiences Countable Events on no more than 4% of the Components within the Segment, for the greater of either the last 30 Components maintained or all Components maintained in the previous year.
5. If the Components in a Protection System Segment maintained through a performance-based PSMP experience 4% or more Countable Events, develop, document, and implement an action plan to reduce the Countable Events to less than 4% of the Segment population within 3 years.

Standard Development Roadmap

This section is maintained by the drafting team during the development of the standard and will be removed when the standard becomes effective.

Development Steps Completed:

1. Standards Committee approved posting SAR and draft standard on August 11, 2011.
2. SAR and draft standard were posted for a 45-day concurrent posting and initial ballot from August 15, 2011 through September 29, 2011.
3. Standard passed the initial ballot with the following results: Quorum - 84.32% and Affirmative - 73.93%.
4. Draft standard was posted for a 30-day concurrent posting and successive ballot from February 28, 2012 through March 28, 2012.
5. Standard passed the successive ballot with the following results: Quorum – 84.32% and Affirmative – 73.93%.
6. Draft standard was posted for a 30-day concurrent posting and successive ballot from May 29, 2012 through June 27, 2012.
7. Standard passed the successive ballot with the following results: Quorum – 79.46% and Affirmative – 79.00%.

Description of Current Draft:
This is the second draft of the Standard. This standard merges previous standards PRC-005-1b, PRC-008-0, PRC-011-0, and PRC-017-0. It also addresses FERC comments from Order 693, and addresses observations from the NERC System Protection and Control Task Force, as presented in *NERC SPCTF Assessment of Standards: PRC-005-1 — Transmission and Generation Protection System Maintenance and Testing, PRC-008-0 — Underfrequency Load Shedding Equipment Maintenance Programs, PRC-011-0 — UVLS System Maintenance and Testing, PRC-017-0 — Special Protection System Maintenance and Testing.*

Future Development Plan:

Anticipated Actions	Anticipated Date
1. Post for combined 30-day comment and successive ballot.	July 2012
2. Drafting Team Responds to Comments	September 2012
3. Conduct recirculation ballot	October 2012
4. BOT Adoption	~~December~~ November 2012

Definitions of Terms Used in Standard

This section includes all newly defined or revised terms used in the proposed standard. Terms already defined in the Reliability Standards Glossary of Terms are not repeated here. New or revised definitions listed below become approved when the proposed standard is approved. When the standard becomes effective, these defined terms will be removed from the individual standard and added to the Glossary.

Protection System Maintenance Program (PSMP) — An ongoing program by which Protection System components are kept in working order and proper operation of malfunctioning components is restored. A maintenance program for a specific component includes one or more of the following activities:

- Verify — Determine that the component is functioning correctly.
- Monitor — Observe the routine in-service operation of the component.
- Test — Apply signals to a component to observe functional performance or output behavior, or to diagnose problems.
- Inspect — Examine for signs of component failure, reduced performance or degradation.
- Calibrate — Adjust the operating threshold or measurement accuracy of a measuring element to meet the intended performance requirement.

Protection System (NERC Board of Trustees Approved Definition)

- Protective relays which respond to electrical quantities,
- Communications systems necessary for correct operation of protective functions,
- Voltage and current sensing devices providing inputs to protective relays,
- Station dc supply associated with protective functions (including station batteries, battery chargers, and non-battery-based dc supply), and
- Control circuitry associated with protective functions through the trip coil(s) of the circuit breakers or other interrupting devices.

The following terms are defined for use only within PRC-005-2, and should remain with the standard upon approval rather than being moved to the Glossary of Terms.

Unresolved Maintenance Issue – A deficiency identified during a maintenance activity that causes the component to not meet the intended performance, cannot be corrected during the maintenance interval, and requires follow-up corrective action.

Segment – Protection Systems or components of a consistent design standard, or a particular model or type from a single manufacturer that typically share other common elements. Consistent performance is expected across the entire population of a Segment. A Segment must contain at least sixty (60) individual components.

Component Type - Any one of the five specific elements of the Protection System definition.

Component – A Component is any individual discrete piece of equipment included in a Protection System, including but not limited to a protective relay or current sensing device. The designation of what constitutes a control circuit Component is dependent upon how an entity performs and tracks the testing of the control circuitry. Some entities test their control circuits on a breaker basis whereas others test their circuitry on a local zone of protection basis. Thus, entities are allowed the latitude to designate their own definitions of control circuit Components. Another example of where the entity has some discretion

on determining what constitutes a single Component is the voltage and current sensing devices, where the entity may choose either to designate a full three-phase set of such devices or a single device as a single Component.

Countable Event – A failure of a Component requiring repair or replacement, any condition discovered during the maintenance activities in Tables 1-1 through 1-5 and Table 3 which requires corrective action or a Misoperation attributed to hardware failure or calibration failure. Misoperations due to product design errors, software errors, relay settings different from specified settings, Protection System Component configuration errors, or Protection System application errors are not included in Countable Events.

A. Introduction

1. Title: **Protection System Maintenance**

2. Number: PRC-005-2

3. Purpose: To document and implement programs for the maintenance of all Protection Systems affecting the reliability of the Bulk Electric System (BES) so that these Protection Systems are kept in working order.

4. Applicability:

4.1. Functional Entities:

4.1.1 Transmission Owner

4.1.2 Generator Owner

4.1.3 Distribution Provider

4.2. Facilities:

4.2.1 Protection Systems that are installed for the purpose of detecting Faults on BES Elements (lines, buses, transformers, etc.)

4.2.2 Protection Systems used for underfrequency load-shedding systems installed per ERO underfrequency load-shedding requirements.

4.2.3 Protection Systems used for undervoltage load-shedding systems installed to prevent system voltage collapse or voltage instability for BES reliability.

4.2.4 Protection Systems installed as a Special Protection System (SPS) for BES reliability.

4.2.5 Protection Systems for generator Facilities that are part of the BES, including:

4.2.5.1 Protection Systems that act to trip the generator either directly or via lockout or auxiliary tripping relays.

4.2.5.2 Protection Systems for generator step-up transformers for generators that are part of the BES.

4.2.5.3 Protection Systems for transformers connecting aggregated generation, where the aggregated generation is part of the BES (e.g., transformers connecting facilities such as wind-farms to the BES).

4.2.5.4 Protection Systems for station service or excitation transformers connected to the generator bus of generators which are part of the BES, that act to trip the generator either directly or via lockout or tripping auxiliary relays.

5. Effective Date: See Implementation Plan

B. Requirements

R1. Each Transmission Owner, Generator Owner, and Distribution Provider shall establish a Protection System Maintenance Program (PSMP) for its Protection Systems identified in Section 4.2. *[Violation Risk Factor: Medium] [Time Horizon: Operations Planning]*

The PSMP shall:

1.1. Identify which maintenance method (time-based, performance-based per PRC-005 Attachment A, or a combination) is used to address each Protection System Component Type. All batteries associated with the station dc supply Component Type of a Protection System shall be included in a time-based program as described in Table 1-4 and Table 3.

> ***Component Type*** *- Any one of the five specific elements of the Protection System definition.*

1.2. Include the applicable monitored Component attributes applied to each Protection System Component Type consistent with the maintenance intervals specified in Tables 1-1 through 1-5, Table 2, and Table 3 where monitoring is used to extend the maintenance intervals beyond those specified for unmonitored Protection System Components.

> **Component** – *A component is any individual discrete piece of equipment included in a Protection System, including but not limited to a protective relay or current sensing device. The designation of what constitutes a control circuit component is very dependent upon how an entity performs and tracks the testing of the control circuitry. Some entities test their control circuits on a breaker basis whereas others test their circuitry on a local zone of protection basis. Thus, entities are allowed the latitude to designate their own definitions of control circuit components. Another example of where the entity has some discretion on determining what constitutes a single component is the voltage and current sensing devices, where the entity may choose either to designate a full three-phase set of such devices or a single device as a single component.*

R2. Each Transmission Owner, Generator Owner, and Distribution Provider that uses performance-based maintenance intervals in its PSMP shall follow the procedure established in PRC-005 Attachment A to establish and maintain its performance-based intervals. *[Violation Risk Factor: Medium] [Time Horizon: Operations Planning]*

R3. Each Transmission Owner, Generator Owner, and Distribution Provider that utilizes time-based maintenance program(s) shall maintain its Protection System Components that are included within the time-based maintenance program in accordance with the minimum maintenance activities and maximum maintenance intervals prescribed within Tables 1-1 through 1-5, Table 2, and Table 3. *[Violation Risk Factor: High] [Time Horizon: Operations Planning]*

R4. Each Transmission Owner, Generator Owner, and Distribution Provider that utilizes performance-based maintenance program(s) in accordance with Requirement R2 shall implement and follow its PSMP for its Protection System Components that are included within the performance-based program(s). *[Violation Risk Factor: High] [Time Horizon: Operations Planning]*

R5. Each Transmission Owner, Generator Owner, and Distribution Provider shall demonstrate efforts to correct identified Unresolved Maintenance Issues. *[Violation Risk Factor: Medium] [Time Horizon: Operations Planning]*

> ***Unresolved Maintenance Issue*** *- A deficiency identified during a maintenance activity that causes the component to not meet the intended performance, cannot be corrected during the maintenance interval, and requires follow-up corrective action.*

C. Measures

M1. Each Transmission Owner, Generator Owner and Distribution Provider shall have a documented Protection System Maintenance Program in accordance with Requirement R1.

For each Protection System Component Type, the documentation shall include the type of maintenance method applied (time-based, performance-based, or a combination of these maintenance methods), and shall include all batteries associated with the station dc supply Component Types in a time-based program as described in Table 1-4 and Table 3. (Part 1.1)

For Component Types that use monitoring to extend the maintenance intervals, the responsible entity(s) shall have evidence for each protection Component Type (such as manufacturer's specifications or engineering drawings) of the appropriate monitored Component attributes as specified in Tables 1-1 through 1-5, Table 2, and Table 3. (Part 1.2)

M2. Each Transmission Owner, Generator Owner, and Distribution Provider that uses performance-based maintenance intervals shall have evidence that its current performance-based maintenance program(s) is in accordance with Requirement R2, which may include but is not limited to Component lists, dated maintenance records, and dated analysis records and results.

M3. Each Transmission Owner, Generator Owner, and Distribution Provider that utilizes time-based maintenance program(s) shall have evidence that it has maintained its Protection System Components included within its time-based program in accordance with Requirement R3. The evidence may include but is not limited to dated maintenance records, dated maintenance summaries, dated check-off lists, dated inspection records, or dated work orders.

M4. Each Transmission Owner, Generator Owner, and Distribution Provider that utilizes performance-based maintenance intervals in accordance with Requirement R2 shall have evidence that it has implemented the Protection System Maintenance Program for the Protection System Components included in its performance-based program in accordance with Requirement R4. The evidence may include but is not limited to dated maintenance records, dated maintenance summaries, dated check-off lists, dated inspection records, or dated work orders.

M5. Each Transmission Owner, Generator Owner, and Distribution Provider shall have evidence that it has undertaken efforts to correct identified Unresolved Maintenance Issues in accordance with Requirement R5. The evidence may include but is not limited to work orders, replacement Component orders, invoices, project schedules with completed milestones, return material authorizations (RMAs) or purchase orders.

D. Compliance

1. Compliance Monitoring Process

1.1. Compliance Enforcement Authority

Regional Entity

1.2. Compliance Monitoring and Enforcement Processes:

Compliance Audit

Self-Certification

Spot Checking

Compliance Investigation

Self-Reporting

Complaint

1.3. Evidence Retention

The following evidence retention periods identify the period of time an entity is required to retain specific evidence to demonstrate compliance. For instances where the evidence retention period specified below is shorter than the time since the last audit, the Compliance Enforcement Authority may ask an entity to provide other evidence to show that it was compliant for the full time period since the last audit.

The Transmission Owner, Generator Owner, and Distribution Provider shall each keep data or evidence to show compliance as identified below unless directed by its Compliance Enforcement Authority to retain specific evidence for a longer period of time as part of an investigation.

For Requirement R1, the Transmission Owner, Generator Owner, and Distribution Provider shall each keep its current dated Protection System Maintenance Program, as well as any superseded versions since the preceding compliance audit, including the documentation that specifies the type of maintenance program applied for each Protection System Component Type.

For Requirement R2, Requirement R3, Requirement R4, and Requirement R5, the Transmission Owner, Generator Owner, and Distribution Provider shall each keep documentation of the two most recent performances of each distinct maintenance activity for the Protection System Component, or all performances of each distinct maintenance activity for the Protection System Component since the previous scheduled audit date, whichever is longer.

The Compliance Enforcement Authority shall keep the last audit records and all requested and submitted subsequent audit records.

1.4. Additional Compliance Information

None.

2. Violation Severity Levels

Requirement Number	Lower VSL	Moderate VSL	High VSL	Severe VSL
R1	The responsible entity's PSMP failed to specify whether one Component Type is being addressed by time-based or performance-based maintenance, or a combination of both. (Part 1.1) OR The responsible entity's PSMP failed to include applicable station batteries in a time-based program. (Part 1.1)	The responsible entity's PSMP failed to specify whether two Component Types are being addressed by time-based or performance-based maintenance, or a combination of both. (Part 1.1)	The responsible entity's PSMP failed to include the applicable monitoring attributes applied to each Protection System Component Type consistent with the maintenance intervals specified in Tables 1-1 through 1-5, Table 2, and Table 3 where monitoring is used to extend the maintenance intervals beyond those specified for unmonitored Protection System Components. (Part 1.2).	The responsible entity failed to establish a PSMP. OR The responsible entity failed to specify whether three or more Component Types are being addressed by time-based or performance-based maintenance, or a combination of both. (Part 1.1).
R2	The responsible entity uses performance-based maintenance intervals in its PSMP but failed to reduce Countable Events to no more than 4% within three years.	NA	The responsible entity uses performance-based maintenance intervals in its PSMP but failed to reduce Countable Events to no more than 4% within four years.	The responsible entity uses performance-based maintenance intervals in its PSMP but: 1) Failed to establish the technical justification described within Requirement R2 for the initial use of the performance-based PSMP OR 2) Failed to reduce Countable Events to no more than 4% within five years OR 3) Maintained a Segment with less than 60 Components OR 4) Failed to: • Annually update the list of Components, OR

Requirement Number	Lower VSL	Moderate VSL	High VSL	Severe VSL
				• Annually perform maintenance on the greater of 5% of the segment population or 3 Components, OR • Annually analyze the program activities and results for each Segment.
R3	For Protection System Components included within a time-based maintenance program, the responsible entity failed to maintain 5% or less of the total Components included within a specific Protection System Component Type, in accordance with the minimum maintenance activities and maximum maintenance intervals prescribed within Tables 1-1 through 1-5, Table 2, and Table 3.	For Protection System Components included within a time-based maintenance program, the responsible entity failed to maintain more than 5% but 10% or less of the total Components included within a specific Protection System Component Type, in accordance with the minimum maintenance activities and maximum maintenance intervals prescribed within Tables 1-1 through 1-5, Table 2, and Table 3.	For Protection System Components included within a time-based maintenance program, the responsible entity failed to maintain more than 10% but 15% or less of the total Components included within a specific Protection System Component Type, in accordance with the minimum maintenance activities and maximum maintenance intervals prescribed within Tables 1-1 through 1-5, Table 2, and Table 3.	For Protection System Components included within a time-based maintenance program, the responsible entity failed to maintain more than 15% of the total Components included within a specific Protection System Component Type, in accordance with the minimum maintenance activities and maximum maintenance intervals prescribed within Tables 1-1 through 1-5, Table 2, and Table 3.
R4	For Protection System Components included within a performance-based maintenance program, the responsible entity failed to maintain 5% or less of the annual scheduled maintenance for a specific Protection System Component Type in accordance with their performance-based PSMP.	For Protection System Components included within a performance-based maintenance program, the responsible entity failed to maintain more than 5% but 10% or less of the annual scheduled maintenance for a specific Protection System Component Type in accordance with their performance-based PSMP.	For Protection System Components included within a performance-based maintenance program, the responsible entity failed to maintain more than 10% but 15% or less of the annual scheduled maintenance for a specific Protection System Component Type in accordance with their performance-based PSMP.	For Protection System Components included within a performance-based maintenance program, the responsible entity failed to maintain more than 15% of the annual scheduled maintenance for a specific Protection System Component Type in accordance with their performance-based PSMP.
R5	The responsible entity failed to undertake efforts to correct 5 or fewer identified Unresolved	The responsible entity failed to undertake efforts to correct greater than 5, but less than or equal to 10	The responsible entity failed to undertake efforts to correct greater than 10, but less than or equal to 15	The responsible entity failed to undertake efforts to correct greater than 15 identified Unresolved

Requirement Number	Lower VSL	Moderate VSL	High VSL	Severe VSL
	Maintenance Issues.	identified Unresolved Maintenance Issues.	identified Unresolved Maintenance Issues.	Maintenance Issues.

E. Regional Variances

None

F. Supplemental Reference Document

The following documents present a detailed discussion about determination of maintenance intervals and other useful information regarding establishment of a maintenance program.

1. PRC-005-2 Protection System Maintenance Supplementary Reference and FAQ — July 2012.

Version History

Version	Date	Action	Change Tracking
2	TBD	Complete revision, absorbing maintenance requirements from PRC-005-1b, PRC-008-0, PRC-011-0, PRC-017-0	Complete revision

Table 1-1 Component Type - Protective Relay Excluding distributed UFLS and distributed UVLS (see Table 3)		
Component Attributes	**Maximum Maintenance Interval**[1]	**Maintenance Activities**
Any unmonitored protective relay not having all the monitoring attributes of a category below.	6 calendar years	For all unmonitored relays: • Verify that settings are as specified For non-microprocessor relays: • Test and, if necessary calibrate For microprocessor relays: • Verify operation of the relay inputs and outputs that are essential to proper functioning of the Protection System. • Verify acceptable measurement of power system input values.
Monitored microprocessor protective relay with the following: • Internal self-diagnosis and alarming (see Table 2). • Voltage and/or current waveform sampling three or more times per power cycle, and conversion of samples to numeric values for measurement calculations by microprocessor electronics. • Alarming for power supply failure (see Table 2).	12 calendar years	Verify: • Settings are as specified. • Operation of the relay inputs and outputs that are essential to proper functioning of the Protection System. • Acceptable measurement of power system input values.

[1] For the tables in this standard, a calendar year starts on the first day of a new year (January 1) after a maintenance activity has been completed. For the tables in this standard, a calendar month starts on the first day of the first month after a maintenance activity has been completed.

Table 1-1 Component Type - Protective Relay Excluding distributed UFLS and distributed UVLS (see Table 3)		
Component Attributes	**Maximum Maintenance Interval**[1]	**Maintenance Activities**
Monitored microprocessor protective relay with preceding row attributes and the following: • Ac measurements are continuously verified by comparison to an independent ac measurement source, with alarming for excessive error (See Table 2). • Some or all binary or status inputs and control outputs are monitored by a process that continuously demonstrates ability to perform as designed, with alarming for failure (See Table 2). • Alarming for change of settings (See Table 2).	12 calendar years	Verify only the unmonitored relay inputs and outputs that are essential to proper functioning of the Protection System.

Table 1-2 Component Type - Communications Systems Excluding distributed UFLS and distributed UVLS (see Table 3)		
Component Attributes	**Maximum Maintenance Interval**	**Maintenance Activities**
Any unmonitored communications system necessary for correct operation of protective functions, and not having all the monitoring attributes of a category below.	4 calendar months	Verify that the communications system is functional.
	6 calendar years	Verify that the communications system meets performance criteria pertinent to the communications technology applied (e.g. signal level, reflected power, or data error rate). Verify operation of communications system inputs and outputs that are essential to proper functioning of the Protection System.
Any communications system with continuous monitoring or periodic automated testing for the presence of the channel function, and alarming for loss of function (See Table 2).	12 calendar years	Verify that the communications system meets performance criteria pertinent to the communications technology applied (e.g. signal level, reflected power, or data error rate). Verify operation of communications system inputs and outputs that are essential to proper functioning of the Protection System.
Any communications system with all of the following: • Continuous monitoring or periodic automated testing for the performance of the channel using criteria pertinent to the communications technology applied (e.g. signal level, reflected power, or data error rate, and alarming for excessive performance degradation). (See Table 2) • Some or all binary or status inputs and control outputs are monitored by a process that continuously demonstrates ability to perform as designed, with alarming for failure (See Table 2).	12 calendar years	Verify only the unmonitored communications system inputs and outputs that are essential to proper functioning of the Protection System

Table 1-3 Component Type - Voltage and Current Sensing Devices Providing Inputs to Protective Relays Excluding distributed UFLS and distributed UVLS (see Table 3)		
Component Attributes	**Maximum Maintenance Interval**	**Maintenance Activities**
Any voltage and current sensing devices not having monitoring attributes of the category below.	12 calendar years	Verify that current and voltage signal values are provided to the protective relays.
Voltage and Current Sensing devices connected to microprocessor relays with AC measurements are continuously verified by comparison of sensing input value, as measured by the microprocessor relay, to an independent ac measurement source, with alarming for unacceptable error or failure (see Table 2).	No periodic maintenance specified	None.

Table 1-4(a) Component Type – Protection System Station dc Supply Using Vented Lead-Acid (VLA) Batteries Excluding distributed UFLS and distributed UVLS (see Table 3) Protection System Station dc supply used only for non-BES interrupting devices for SPS, non-distributed UFLS systems, or non-distributed UVLS systems is excluded (see Table 1-4(e)).		
Component Attributes	**Maximum Maintenance Interval**	**Maintenance Activities**
Protection System Station dc supply using **Vented Lead-Acid (VLA) batteries** not having monitoring attributes of Table 1-4(f).	4 Calendar Months	Verify: • Station dc supply voltage Inspect: • Electrolyte level • For unintentional grounds
	18 Calendar Months	Verify: • Float voltage of battery charger • Battery continuity • Battery terminal connection resistance • Battery intercell or unit-to-unit connection resistance Inspect: • Cell condition of all individual battery cells where cells are visible – or measure battery cell/unit internal ohmic values where the cells are not visible • Physical condition of battery rack

Table 1-4(a) Component Type – Protection System Station dc Supply Using Vented Lead-Acid (VLA) Batteries Excluding distributed UFLS and distributed UVLS (see Table 3) Protection System Station dc supply used only for non-BES interrupting devices for SPS, non-distributed UFLS systems, or non-distributed UVLS systems is excluded (see Table 1-4(e)).		
Component Attributes	**Maximum Maintenance Interval**	**Maintenance Activities**
	18 Calendar Months -or- 6 Calendar Years	Verify that the station battery can perform as manufactured by evaluating cell/unit measurements indicative of battery performance (e.g. internal ohmic values or float current) against the station battery baseline. -or- Verify that the station battery can perform as manufactured by conducting a performance or modified performance capacity test of the entire battery bank.

Table 1-4(b) Component Type – Protection System Station dc Supply Using Valve-Regulated Lead-Acid (VRLA) Batteries Excluding distributed UFLS and distributed UVLS (see Table 3) Protection System Station dc supply used only for non-BES interrupting devices for SPS, non-distributed UFLS systems, or non-distributed UVLS systems is excluded (see Table 1-4(e)).		
Component Attributes	**Maximum Maintenance Interval**	**Maintenance Activities**
Protection System Station dc supply **with Valve Regulated Lead-Acid (VRLA) batteries** not having monitoring attributes of Table 1-4(f).	4 Calendar Months	Verify: • Station dc supply voltage Inspect: • For unintentional grounds
	6 Calendar Months	Inspect: • Condition of all individual units by measuring battery cell/unit internal ohmic values.
	18 Calendar Months	Verify: • Float voltage of battery charger • Battery continuity • Battery terminal connection resistance • Battery intercell or unit-to-unit connection resistance Inspect: • Physical condition of battery rack

Table 1-4(b) Component Type – Protection System Station dc Supply Using Valve-Regulated Lead-Acid (VRLA) Batteries Excluding distributed UFLS and distributed UVLS (see Table 3) Protection System Station dc supply used only for non-BES interrupting devices for SPS, non-distributed UFLS systems, or non-distributed UVLS systems is excluded (see Table 1-4(e)).		
Component Attributes	**Maximum Maintenance Interval**	**Maintenance Activities**
	6 Calendar Months -or- 3 Calendar Years	Verify that the station battery can perform as manufactured by evaluating cell/unit measurements indicative of battery performance (e.g. internal ohmic values or float current) against the station battery baseline. -or- Verify that the station battery can perform as manufactured by conducting a performance or modified performance capacity test of the entire battery bank.

Table 1-4(c) Component Type – Protection System Station dc Supply Using Nickel-Cadmium (NiCad) Batteries Excluding distributed UFLS and distributed UVLS (see Table 3) Protection System Station dc supply used only for non-BES interrupting devices for SPS, non-distributed UFLS system, or non-distributed UVLS systems is excluded (see Table 1-4(e)).		
Component Attributes	**Maximum Maintenance Interval**	**Maintenance Activities**
Protection System Station dc supply **Nickel-Cadmium (NiCad) batteries** not having monitoring attributes of Table 1-4(f).	4 Calendar Months	Verify: • Station dc supply voltage Inspect: • Electrolyte level • For unintentional grounds
	18 Calendar Months	Verify: • Float voltage of battery charger • Battery continuity • Battery terminal connection resistance • Battery intercell or unit-to-unit connection resistance Inspect: • Cell condition of all individual battery cells. • Physical condition of battery rack
	6 Calendar Years	Verify that the station battery can perform as manufactured by conducting a performance or modified performance capacity test of the entire battery bank.

Table 1-4(d) Component Type – Protection System Station dc Supply Using Non Battery Based Energy Storage Excluding distributed UFLS and distributed UVLS (see Table 3) Protection System Station dc supply used only for non-BES interrupting devices for SPS, non-distributed UFLS system, or non-distributed UVLS systems is excluded (see Table 1-4(e)).		
Component Attributes	**Maximum Maintenance Interval**	**Maintenance Activities**
Any Protection System station dc supply not using a battery and not having monitoring attributes of Table 1-4(f).	4 Calendar Months	Verify: • Station dc supply voltage Inspect: • For unintentional grounds
	18 Calendar Months	Inspect: Condition of non-battery based dc supply
	6 Calendar Years	Verify that the dc supply can perform as manufactured when ac power is not present.

Table 1-4(e) Component Type – Protection System Station dc Supply for non-BES Interrupting Devices for SPS, non-distributed UFLS, and non-distributed UVLS systems		
Component Attributes	**Maximum Maintenance Interval**	**Maintenance Activities**
Any Protection System dc supply used for tripping only non-BES interrupting devices as part of a SPS, non-distributed UFLS, or non-distributed UVLS system and not having monitoring attributes of Table 1-4(f).	When control circuits are verified (See Table 1-5)	Verify Station dc supply voltage.

Table 1-4(f) Exclusions for Protection System Station dc Supply Monitoring Devices and Systems		
Component Attributes	**Maximum Maintenance Interval**	**Maintenance Activities**
Any station dc supply with high and low voltage monitoring and alarming of the battery charger voltage to detect charger overvoltage and charger failure (See Table 2).	No periodic maintenance specified	No periodic verification of station dc supply voltage is required.
Any battery based station dc supply with electrolyte level monitoring and alarming in every cell (See Table 2).		No periodic inspection of the electrolyte level for each cell is required.
Any station dc supply with unintentional dc ground monitoring and alarming (See Table 2).		No periodic inspection of unintentional dc grounds is required.
Any station dc supply with charger float voltage monitoring and alarming to ensure correct float voltage is being applied on the station dc supply (See Table 2).		No periodic verification of float voltage of battery charger is required.
Any battery based station dc supply with monitoring and alarming of battery string continuity (See Table 2).		No periodic verification of the battery continuity is required.
Any battery based station dc supply with monitoring and alarming of the intercell and/or terminal connection detail resistance of the entire battery (See Table 2).		No periodic verification of the intercell and terminal connection resistance is required.
Any Valve Regulated Lead-Acid (VRLA) or Vented Lead-Acid (VLA) station battery with internal ohmic value or float current monitoring and alarming, and evaluating present values relative to baseline internal ohmic values for every cell/unit (See Table 2).		No periodic evaluation relative to baseline of battery cell/unit measurements indicative of battery performance is required to verify the station battery can perform as manufactured.
Any Valve Regulated Lead-Acid (VRLA) or Vented Lead-Acid (VLA) station battery with monitoring and alarming of each cell/unit internal ohmic value (See Table 2).		No periodic inspection of the condition of all individual units by measuring battery cell/unit internal ohmic values of a station VRLA or Vented Lead-Acid (VLA) battery is required.

Table 1-5 Component Type - Control Circuitry Associated With Protective Functions Excluding distributed UFLS and distributed UVLS (see Table 3) **Note:** Table requirements apply to all Control Circuitry Components of Protection Systems, and SPSs except as noted.		
Component Attributes	**Maximum Maintenance Interval**	**Maintenance Activities**
Trip coils or actuators of circuit breakers, interrupting devices, or mitigating devices (regardless of any monitoring of the control circuitry).	6 calendar years	Verify that each trip coil is able to operate the circuit breaker, interrupting device, or mitigating device.
Electromechanical lockout devices which are directly in a trip path from the protective relay to the interrupting device trip coil (regardless of any monitoring of the control circuitry).	6 calendar years	Verify electrical operation of electromechanical lockout devices.
Unmonitored control circuitry associated with SPS.	12 calendar years	Verify all paths of the control circuits essential for proper operation of the SPS.
Unmonitored control circuitry associated with protective functions inclusive of all auxiliary relays.	12 calendar years	Verify all paths of the trip circuits inclusive of all auxiliary relays through the trip coil(s) of the circuit breakers or other interrupting devices.
Control circuitry associated with protective functions and/or SPS whose integrity is monitored and alarmed (See Table 2).	No periodic maintenance specified	None.

Table 2 – Alarming Paths and Monitoring In Tables 1-1 through 1-5 and Table 3, alarm attributes used to justify extended maximum maintenance intervals and/or reduced maintenance activities are subject to the following maintenance requirements		
Component Attributes	**Maximum Maintenance Interval**	**Maintenance Activities**
Any alarm path through which alarms in Tables 1-1 through 1-5 and Table 3 are conveyed from the alarm origin to the location where corrective action can be initiated, and not having all the attributes of the "Alarm Path with monitoring" category below. Alarms are reported within 24 hours of detection to a location where corrective action can be initiated.	12 Calendar Years	Verify that the alarm path conveys alarm signals to a location where corrective action can be initiated.
Alarm Path with monitoring: The location where corrective action is taken receives an alarm within 24 hours for failure of any portion of the alarming path from the alarm origin to the location where corrective action can be initiated.	No periodic maintenance specified	None.

Table 3 Maintenance Activities and Intervals for distributed UFLS and distributed UVLS Systems		
Component Attributes	**Maximum Maintenance Interval**	**Maintenance Activities**
Any unmonitored protective relay not having all the monitoring attributes of a category below.	6 calendar years	Verify that settings are as specified For non-microprocessor relays: • Test and, if necessary calibrate For microprocessor relays: • Verify operation of the relay inputs and outputs that are essential to proper functioning of the Protection System. • Verify acceptable measurement of power system input values.
Monitored microprocessor protective relay with the following: • Internal self diagnosis and alarming (See Table 2). • Voltage and/or current waveform sampling three or more times per power cycle, and conversion of samples to numeric values for measurement calculations by microprocessor electronics. Alarming for power supply failure (See Table 2).	12 calendar years	Verify: • Settings are as specified. • Operation of the relay inputs and outputs that are essential to proper functioning of the Protection System. • Acceptable measurement of power system input values
Monitored microprocessor protective relay with preceding row attributes and the following: • Ac measurements are continuously verified by comparison to an independent ac measurement source, with alarming for excessive error (See Table 2). • Some or all binary or status inputs and control outputs are monitored by a process that continuously demonstrates ability to perform as designed, with alarming for failure (See Table 2).	12 calendar years	Verify only the unmonitored relay inputs and outputs that are essential to proper functioning of the Protection System.

Table 3 Maintenance Activities and Intervals for distributed UFLS and distributed UVLS Systems		
Component Attributes	**Maximum Maintenance Interval**	**Maintenance Activities**
Alarming for change of settings (See Table 2).		
Voltage and/or current sensing devices associated with UFLS or UVLS systems.	12 calendar years	Verify that current and/or voltage signal values are provided to the protective relays.
Protection System dc supply for tripping non-BES interrupting devices used only for a UFLS or UVLS system.	12 calendar years	Verify Protection System dc supply voltage.
Control circuitry between the UFLS or UVLS relays and electromechanical lockout and/or tripping auxiliary devices (excludes non-BES interrupting device trip coils).	12 calendar years	Verify the path from the relay to the lockout and/or tripping auxiliary relay (including essential supervisory logic).
Electromechanical lockout and/or tripping auxiliary devices associated only with UFLS or UVLS systems (excludes non-BES interrupting device trip coils).	12 calendar years	Verify electrical operation of electromechanical lockout and/or tripping auxiliary devices.
Control circuitry between the electromechanical lockout and/or tripping auxiliary devices and the non-BES interrupting devices in UFLS or UVLS systems, or between UFLS or UVLS relays (with no interposing electromechanical lockout or auxiliary device) and the non-BES interrupting devices (excludes non-BES interrupting device trip coils).	No periodic maintenance specified	None.
Trip coils of non-BES interrupting devices in UFLS or UVLS systems.	No periodic maintenance specified	None.

PRC-005 — Attachment A

Criteria for a Performance-Based Protection System Maintenance Program

Purpose: To establish a technical basis for initial and continued use of a performance-based Protection System Maintenance Program (PSMP).

To establish the technical justification for the initial use of a performance-based PSMP:

1. Develop a list with a description of Components included in each designated Segment of the Protection System Component population, with a minimum **Segment** population of 60 Components.
2. Maintain the Components in each Segment according to the time-based maximum allowable intervals established in Tables 1-1 through 1-5 and Table 3 until results of maintenance activities for the Segment are available for a minimum of 30 individual Components of the Segment.

> **Segment** – *Protection Systems or components of a consistent design standard, or a particular model or type from a single manufacturer that typically share other common elements. Consistent performance is expected across the entire population of a Segment. A Segment must contain at least sixty (60) individual components.*

3. Document the maintenance program activities and results for each Segment, including maintenance dates and Countable Events for each included Component.
4. Analyze the maintenance program activities and results for each Segment to determine the overall performance of the Segment and develop maintenance intervals.
5. Determine the maximum allowable maintenance interval for each Segment such that the Segment experiences **Countable Events** on no more than 4% of the Components within the Segment, for the greater of either the last 30 Components maintained or all Components maintained in the previous year.

> **Countable Event** – *A failure of a component requiring repair or replacement, any condition discovered during the maintenance activities in Tables 1-1 through 1-5 and Table 3 which requires corrective action, or a Misoperation attributed to hardware failure or calibration failure. Misoperations due to product design errors, software errors, relay settings different from specified settings, Protection System component configuration errors, or Protection System application errors are not included in Countable Events.*

To maintain the technical justification for the ongoing use of a performance-based PSMP:

1. At least annually, update the list of Protection System Components and Segments and/or description if any changes occur within the Segment.
2. Perform maintenance on the greater of 5% of the Components (addressed in the performance based PSMP) in each Segment or 3 individual Components within the Segment in each year.
3. For the prior year, analyze the maintenance program activities and results for each Segment to determine the overall performance of the Segment.

4. Using the prior year's data, determine the maximum allowable maintenance interval for each Segment such that the Segment experiences Countable Events on no more than 4% of the Components within the Segment, for the greater of either the last 30 Components maintained or all Components maintained in the previous year.
5. If the Components in a Protection System Segment maintained through a performance-based PSMP experience 4% or more Countable Events, develop, document, and implement an action plan to reduce the Countable Events to less than 4% of the Segment population within 3 years.

NERC
NORTH AMERICAN ELECTRIC
RELIABILITY CORPORATION

Implementation Plan

Project 2007-17 Protection Systems Maintenance and Testing
PRC-005-02

Standards Involved
Approval:

- PRC-005-2 – Protection System Maintenance (PRC-005-2)

Retirements:

- PRC-005-1b – Transmission and Generation Protection System Maintenance and Testing (PRC-005-1b)
- PRC-008-0 – Implementation and Documentation of Underfrequency Load Shedding Equipment Maintenance Program (PRC-008-0)
- PRC-011-0 – Undervoltage Load Shedding System Maintenance and Testing (PRC-011-0)
- PRC-017-0 – Special Protection System Maintenance and Testing (PRC-017-0)

Prerequisite Approvals:
Revised definition of "Protection System."

Background:
The Implementation Plan reflects consideration of the following:

1. The requirements set forth in the proposed standard establish minimum maintenance activities for Protection System component types and the maximum allowable maintenance intervals for these maintenance activities. The maintenance activities established may not be presently performed by some entities and the established maximum allowable intervals may be shorter than those currently in use by some entities.
2. For entities not presently performing a maintenance activity or using longer intervals than the maximum allowable intervals established in the proposed standard, it is unrealistic for those entities to be immediately compliant with the new activities or intervals. Further, entities should be allowed to become compliant in such a way as to facilitate a continuing maintenance program.
3. Entities that have previously been performing maintenance within the newly specified intervals may not have all the documentation needed to demonstrate compliance with all of the maintenance activities specified.

4. The Implementation Schedule set forth in this document requires that entities develop their revised Protection System Maintenance Program within twelve (12) months following applicable regulatory approvals, or in those jurisdictions where no regulatory approval is required, on the first day of the first calendar quarter twenty-four (24) months following NERC Board of Trustees adoption. This anticipates that it will take approximately twelve (12) months to achieve regulatory approvals following adoption by the NERC Board of Trustees.
5. The Implementation Schedule set forth in this document facilitates implementation of the more lengthy maintenance intervals within the revised Protection System Maintenance Program in approximately equally-distributed steps over those intervals prescribed for each respective maintenance activity in order that entities may implement this standard in a systematic method that facilitates an effective ongoing Protection System Maintenance Program.

General Considerations:

Each Transmission Owner, Generator Owner, and Distribution Provider shall maintain documentation to demonstrate compliance with PRC-005-1b, PRC-008-0, PRC-011-0, and PRC-017-0 until that entity meets the requirements of PRC-005-2 in accordance with this implementation plan. Each entity shall be responsible for maintaining each of their Protection System components according to their maintenance program already in place for the legacy standards (PRC-005-1b, PRC-008-0, PRC-011-0, and PRC-017-0) or according to their maintenance program for PRC-005-2, but not both. Once an entity has designated PRC-005-2 as its maintenance program for specific Protection System components, they cannot revert to the original program for those components.

While entities are transitioning to the requirements of PRC-005-2, each entity must be prepared to identify:

- All of its applicable Protection System components.
- Whether each component has last been maintained according to PRC-005-2 or under PRC-005-1b, PRC-008-0, PRC-011-0, or PRC-017-0.

For activities being added to an entity's program as part of PRC-005-2 implementation, evidence may be available to show only a single performance of the activity until two maintenance intervals have transpired following initial implementation of PRC-005-2.

Retirement of Existing Standards:

Standards PRC-005-1b, PRC-008-0, PRC-011-0, and PRC-017-0, which are being replaced by PRC-005-2, shall remain active throughout the phased implementation period of PRC-005-2 and shall be applicable to an entity's Protection System component maintenance activities not yet transitioned to PRC-005-2. Standards PRC-005-1b, PRC-008-0, PRC-011-0, and PRC-017-0 shall be retired at midnight of the day immediately prior to the first day of the first calendar quarter one hundred fifty-six (156) months following applicable regulatory approval, or in those jurisdictions where no regulatory approval is

required, at midnight of the day immediately prior to the first day of the first calendar quarter one hundred sixty-eight (168) months following NERC Board of Trustees adoption.

Implementation Plan for Definition:

Protection System Maintenance Program – Entities shall use this definition when implementing any portions of R1, R2 R3, R4 and R5 which use this defined term.

Implementation Plan for Requirements R1, R2 and R5:

Entities shall be 100% compliant on the first day of the first calendar quarter twelve (12) months following applicable regulatory approvals, or in those jurisdictions where no regulatory approval is required, on the first day of the first calendar quarter twenty-four (24) months following NERC Board of Trustees adoption or as otherwise made effective pursuant to the laws applicable to such ERO governmental authorities.

Implementation Plan for Requirements R3 and R4:

1. For Protection System component maintenance activities with maximum allowable intervals of less than one (1) calendar year, as established in Tables 1-1 through 1-5:
   - The entity shall be 100% compliant with PRC-005-2 on the first day of the first calendar quarter eighteen (18) months following applicable regulatory approval, or in those jurisdictions where no regulatory approval is required, on the first day of the first calendar quarter thirty (30) months following NERC Board of Trustees adoption or as otherwise made effective pursuant to the laws applicable to such ERO governmental authorities.
2. For Protection System component maintenance activities with maximum allowable intervals one (1) calendar year or more, but two (2) calendar years or less, as established in Tables 1-1 through 1-5:
   - The entity shall be 100% compliant with PRC-005-2 on the first day of the first calendar quarter thirty-six (36) months following applicable regulatory approval, or in those jurisdictions where no regulatory approval is required, on the first day of the first calendar quarter forty-eight (48) months following NERC Board of Trustees adoption or as otherwise made effective pursuant to the laws applicable to such ERO governmental authorities.
3. For Protection System component maintenance activities with maximum allowable intervals of three (3) calendar years, as established in Tables 1-1 through 1-5:
   - The entity shall be at least 30% compliant with PRC-005-2 on the first day of the first calendar quarter twenty-four (24) months following applicable regulatory approval (or, for generating plants with scheduled outage intervals exceeding two years, at the conclusion of the first succeeding maintenance outage), or in those jurisdictions where no regulatory approval is required, on the first day of the first calendar quarter thirty-six (36) months following NERC Board of Trustees adoption or as otherwise made effective pursuant to the laws applicable to such ERO governmental authorities.
   - The entity shall be at least 60% compliant with PRC-005-2 on the first day of the first calendar quarter thirty-six (36) months following applicable regulatory approval, or in those jurisdictions where no regulatory approval is required, on the first day of the first calendar quarter forty-eight (48) months following NERC Board of Trustees adoption or as otherwise made effective pursuant to the laws applicable to such ERO governmental authorities.

- The entity shall be 100% compliant with PRC-005-2 on the first day of the first calendar quarter forty-eight (48) months following applicable regulatory approval, or in those jurisdictions where no regulatory approval is required, on the first day of the first calendar quarter sixty (60) months following NERC Board of Trustees adoption or as otherwise made effective pursuant to the laws applicable to such ERO governmental authorities.

4. For Protection System component maintenance activities with maximum allowable intervals of six (6) calendar years, as established in Tables 1-1 through 1-5 and Table 3:

   - The entity shall be at least 30% compliant with PRC-005-2 on the first day of the first calendar quarter thirty-six (36) months following applicable regulatory approval (or, for generating plants with scheduled outage intervals exceeding three years, at the conclusion of the first succeeding maintenance outage), or in those jurisdictions where no regulatory approval is required, on the first day of the first calendar quarter forty-eight (48) months following NERC Board of Trustees adoption or as otherwise made effective pursuant to the laws applicable to such ERO governmental authorities.
   - The entity shall be at least 60% compliant with PRC-005-2 on the first day of the first calendar quarter sixty (60) months following applicable regulatory approval, or in those jurisdictions where no regulatory approval is required, on the first day of the first calendar quarter seventy-two (72) months following NERC Board of Trustees adoption or as otherwise made effective pursuant to the laws applicable to such ERO governmental authorities.
   - The entity shall be 100% compliant with PRC-005-2 on the first day of the first calendar quarter eighty-four (84) months following applicable regulatory approval, or in those jurisdictions where no regulatory approval is required, on the first day of the first calendar quarter ninety-six (96) months following NERC Board of Trustees adoption or as otherwise made effective pursuant to the laws applicable to such ERO governmental authorities.

5. For Protection System component maintenance activities with maximum allowable intervals of twelve (12) calendar years, as established in Tables 1-1 through 1-5, Table 2, and Table 3:

   - The entity shall be at least 30% compliant with PRC-005-2 on the first day of the first calendar quarter sixty (60) months following applicable regulatory approval, or in those jurisdictions where no regulatory approval is required, on the first day of the first calendar quarter seventy-two (72) months following NERC Board of Trustees adoption or as otherwise made effective pursuant to the laws applicable to such ERO governmental authorities.
   - The entity shall be at least 60% compliant with PRC-005-2 on the first day of the first calendar quarter following one hundred eight (108) months following applicable regulatory approval, or in those jurisdictions where no regulatory approval is required, on the first day of the first calendar quarter one hundred twenty (120) months following NERC Board of Trustees adoption or as otherwise made effective pursuant to the laws applicable to such ERO governmental authorities.

- The entity shall be 100% compliant with PRC-005-2 on the first day of the first calendar quarter one hundred fifty-six (156) months following applicable regulatory approval, or in those jurisdictions where no regulatory approval is required, on the first day of the first calendar quarter one hundred sixty-eight (168) months following NERC Board of Trustees adoption or as otherwise made effective pursuant to the laws applicable to such ERO governmental authorities.

Applicability:
This standard applies to the following functional entities:

- Transmission Owner
- Generator Owner
- Distribution Provider

Protection System (NERC Board of Trustees Approved Definition)

- Protective relays which respond to electrical quantities,
- Communications systems necessary for correct operation of protective functions,
- Voltage and current sensing devices providing inputs to protective relays,
- Station dc supply associated with protective functions (including station batteries, battery chargers, and non-battery-based dc supply), and
- Control circuitry associated with protective functions through the trip coil(s) of the circuit breakers or other interrupting devices.

NERC
NORTH AMERICAN ELECTRIC
RELIABILITY CORPORATION

Supplementary Reference and FAQ - Draft

PRC-005-2 Protection System Maintenance

October 2012

RELIABILITY | ACCOUNTABILITY

3353 Peachtree Road NE
Suite 600, North Tower
Atlanta, GA 30326
404-446-2560 | www.nerc.com

Table of Contents

Table of Contents ii

1. Introduction and Summary 1

2. Need for Verifying Protection System Performance 2

2.1 Existing NERC Standards for Protection System Maintenance and Testing 2

2.2 Protection System Definition 3

2.3 Applicability of New Protection System Maintenance Standards 3

2.3.1 Frequently Asked Questions: 4

2.4.1 Frequently Asked Questions: 6

3. Protection Systems Product Generations 8

4. Definitions 10

4.1 Frequently Asked Questions: 11

5. Time-Based Maintenance (TBM) Programs 13

5.1 Maintenance Practices 13

5.1.1 Frequently Asked Questions: 15

5.2 Extending Time-Based Maintenance 16

5.2.1 Frequently Asked Questions: 16

6. Condition-Based Maintenance (CBM) Programs 18

6.1 Frequently Asked Questions: 18

7. Time-Based Versus Condition-Based Maintenance 20

7.1 Frequently Asked Questions: 20

8. Maximum Allowable Verification Intervals 26

8.1 Maintenance Tests 26

8.1.1 Table of Maximum Allowable Verification Intervals 26

8.1.2 Additional Notes for Tables 1-1 through 1-5 and Table 3 28

8.1.3 Frequently Asked Questions: 29

8.2 Retention of Records 34

8.2.1 Frequently Asked Questions: 34

8.3 Basis for Table 1 Intervals 36

8.4 Basis for Extended Maintenance Intervals for Microprocessor Relays 37

9. Performance-Based Maintenance Process 40

9.1 Minimum Sample Size 41

9.2 Frequently Asked Questions: 43

10. Overlapping the Verification of Sections of the Protection System 54

10.1 Frequently Asked Questions: 54

11. Monitoring by Analysis of Fault Records 55

11.1 Frequently Asked Questions: 56

12. Importance of Relay Settings in Maintenance Programs 57

12.1 Frequently Asked Questions: 57

13. Self-Monitoring Capabilities and Limitations 60

13.1 Frequently Asked Questions: 61

14. Notification of Protection System Failures 62

15. Maintenance Activities 63

15.1 Protective Relays (Table 1-1) 63

15.1.1 Frequently Asked Questions: 63

15.2 Voltage & Current Sensing Devices (Table 1-3) 63

15.2.1 Frequently Asked Questions: 65

15.3 Control circuitry associated with protective functions (Table 1-5) 66

15.3.1 Frequently Asked Questions: 68

15.4 Batteries and DC Supplies (Table 1-4) 70

15.4.1 Frequently Asked Questions: 70

15.5 Associated communications equipment (Table 1-2) 85

15.5.1 Frequently Asked Questions: 86

15.6 Alarms (Table 2) 89

15.6.1 Frequently Asked Questions: 89

15.7 Distributed UFLS and Distributed UVLS Systems (Table 3) 90

15.7.1 Frequently Asked Questions: 90

15.8 Examples of Evidence of Compliance 91

15.8.1 Frequently Asked Questions: 91

References 93

Figures 95

Figure 1: Typical Transmission System 95

Figure 2: Typical Generation System 96

Figure 1 & 2 Legend – components of Protection Systems 97

Appendix A 98

Appendix B 101

Protection System Maintenance Standard Drafting Team 101

1. Introduction and Summary

Note: This supplementary reference for PRC-005-2 is neither mandatory nor enforceable.

NERC currently has four Reliability Standards that are mandatory and enforceable in the United States and Canada and address various aspects of maintenance and testing of Protection and Control Systems.

These standards are:

PRC-005-1 — Transmission and Generation Protection System Maintenance and Testing

PRC-008-0 — Underfrequency Load Shedding Equipment Maintenance Programs

PRC-011-0 — UVLS System Maintenance and Testing

PRC-017-0 — Special Protection System Maintenance and Testing

While these standards require that applicable entities have a maintenance program for Protection Systems, and that these entities must be able to demonstrate they are carrying out such a program, there are no specifics regarding the technical requirements for Protection System maintenance programs. Furthermore, FERC Order 693 directed additional modifications respective to Protection System maintenance programs. PRC-005-2 combines and replaces PRC-005, PRC-008, PRC-011 and PRC-017.

2. Need for Verifying Protection System Performance

Protective relays have been described as silent sentinels, and do not generally demonstrate their performance until a Fault or other power system problem requires that they operate to protect power system Elements, or even the entire Bulk Electric System (BES). Lacking Faults, switching operations or system problems, the Protection Systems may not operate, beyond static operation, for extended periods. A Misoperation - a false operation of a Protection System or a failure of the Protection System to operate, as designed, when needed - can result in equipment damage, personnel hazards, and wide-area Disturbances or unnecessary customer outages. Maintenance or testing programs are used to determine the performance and availability of Protection Systems.

Typically, utilities have tested Protection Systems at fixed time intervals, unless they had some incidental evidence that a particular Protection System was not behaving as expected. Testing practices vary widely across the industry. Testing has included system functionality, calibration of measuring devices, and correctness of settings. Typically, a Protection System must be visited at its installation site and, in many cases, removed from service for this testing.

Fundamentally, a Reliability Standard for Protection System Maintenance and Testing requires the performance of the maintenance activities that are necessary to detect and correct plausible age and service related degradation of the Protection System components, such that a properly built and commissioned Protection System will continue to function as designed over its service life.

Similarly station batteries, which are an important part of the station dc supply, are not called upon to provide instantaneous dc power to the Protection System until power is required by the Protection System to operate circuit breakers or interrupting devices to clear Faults or to isolate equipment.

2.1 Existing NERC Standards for Protection System Maintenance and Testing

For critical BES protection functions, NERC standards have required that each utility or asset owner define a testing program. The starting point is the existing Standard PRC-005, briefly restated as follows:

Purpose: To document and implement programs for the maintenance of all Protection Systems affecting the reliability of the Bulk Electric System (BES) so that these Protection Systems are kept in working order.

PRC-005-1 is not specific on where the boundaries of the Protection Systems lie. However, the definition of Protection System in the NERC Glossary of Terms used in Reliability Standards indicates what must be included as a minimum.

At the beginning of the project to develop PRC-005-2, the definition of Protection System was:

Protective relays, associated communications Systems, voltage and current sensing devices, station batteries and dc control circuitry.

Applicability: Owners of generation and transmission Protection Systems.

Requirements: The owner shall have a documented maintenance program with test intervals. The owner must keep records showing that the maintenance was performed at the specified intervals.

2.2 Protection System Definition

The most recently approved definition of Protection Systems is:

- Protective relays which respond to electrical quantities,
- Communications systems necessary for correct operation of protective functions,
- Voltage and current sensing devices providing inputs to protective relays,
- Station dc supply associated with protective functions (including station batteries, battery chargers, and non-battery-based dc supply), and
- Control circuitry associated with protective functions through the trip coil(s) of the circuit breakers or other interrupting devices.

2.3 Applicability of New Protection System Maintenance Standards

The BES purpose is to transfer bulk power. The applicability language has been changed from the original PRC-005:

"...affecting the reliability of the Bulk Electric System (BES)…"

To the present language:

"…that are installed for the purpose of detecting Faults on BES Elements (lines, buses, transformers, etc.)."

The drafting team intends that this standard will follow with any definition of the Bulk Electric System. There should be no ambiguity; if the Element is a BES Element, then the Protection System protecting that Element should then be included within this standard. If there is regional variation to the definition, then there will be a corresponding regional variation to the Protection Systems that fall under this standard.

There is no way for the Standard Drafting Team to know whether a specific 230KV line, 115KV line (even 69KV line), for example, should be included or excluded. Therefore, the team set the clear intent that the standard language should simply be applicable to Protection Systems for BES Elements.

The BES is a NERC defined term that, from time to time, may undergo revisions. Additionally, there may even be regional variations that are allowed in the present and future definitions. See the NERC Glossary of Terms for the present, in-force definition. See the applicable Regional Reliability Organization for any applicable allowed variations.

While this standard will undergo revisions in the future, this standard will not attempt to keep up with revisions to the NERC definition of BES, but, rather, simply make BES Protection Systems applicable.

The Standard is applied to Generator Owners (GO) and Transmission Owners (TO) because GOs and TOs have equipment that is BES equipment. The standard brings in Distribution Providers (DP) because, depending on the station configuration of a particular substation, there may be Protection System equipment installed at a non-transmission voltage level (Distribution

Provider equipment) that is wholly or partially installed to protect the BES. PRC-005-2 would apply to this equipment. An example is underfrequency load-shedding, which is frequently applied well down into the distribution system to meet PRC-007-0.

As this standard is intended to replace the existing PRC-005, PRC-008, PRC-011 and PRC-017, those standards are used in the construction of this revision of PRC-005-1. Much of the original intent of those standards was carried forward whenever it was possible to continue the intent without a disagreement with FERC Order 693. For example, the original PRC-008 was constructed quite differently than the original PRC-005. The drafting team agrees with the intent of this and notes that distributed tripping schemes would have to exhibit multiple failures to trip before they would prove to be significant, as opposed to a single failure to trip of, for example, a transmission Protection System Bus Differential lock-out relay. While many failures of these distribution breakers could add up to be significant, it is also believed that distribution breakers are operated often on just Fault clearing duty; and, therefore, the distribution circuit breakers are operated at least as frequently as stipulated in any requirement in this standard.

Additionally, since this standard will now replace PRC-011, it will be important to make the distinction between under-voltage Protection Systems that protect individual Loads and Protection Systems that are UVLS schemes that protect the BES. Any UVLS scheme that had been applicable under PRC-011 will now be applicable under this revision of PRC-005-1. An example of an under-voltage load-shedding scheme that is not applicable to this standard is one in which the tripping action was intended to prevent low distribution voltage to a specific Load from a Transmission system that was intact except for the line that was out of service, as opposed to preventing a Cascading outage or Transmission system collapse.

It had been correctly noted that the devices needed for PRC-011 are the very same types of devices needed in PRC-005.

Thus, a standard written for Protection Systems of the BES can easily make the needed requirements for Protection Systems, and replace some other standards at the same time.

2.3.1 Frequently Asked Questions:

What exactly is the BES, or Bulk Electric System?

BES is the abbreviation for Bulk Electric System. BES is a term in the Glossary of Terms used in Reliability Standards, and is not being modified within this draft standard.
NERC's approved definition of Bulk Electric System is:

As defined by the Regional Reliability Organization, the electrical generation resources, transmission lines, Interconnections with neighboring Systems, and associated equipment, generally operated at voltages of 100 kV or higher. Radial transmission Facilities serving only Load with one transmission source are generally not included in this definition.

The BES definition is presently undergoing the process of revision.

Each regional entity implements a definition of the Bulk Electric System that is based on this NERC definition; in some cases, supplemented by additional criteria. These regional definitions have been documented and provided to FERC as part of a *June 14, 2007 Informational Filing*.

Why is Distribution Provider included within the Applicable Entities and as a responsible entity within several of the requirements? Wouldn't anyone having relevant Facilities be a Transmission Owner?

Depending on the station configuration of a particular substation, there may be Protection System equipment installed at a non-transmission voltage level (Distribution Provider equipment) that is wholly or partially installed to protect the BES. PRC-005-2 would apply to this equipment. An example is underfrequency load-shedding, which is frequently applied well down into the distribution system to meet PRC-007-0.

We have an under voltage load-shedding (UVLS) system in place that prevents one of our distribution substations from supplying extremely low voltage in the case of a specific transmission line outage. The transmission line is part of the BES. Does this mean that our UVLS system falls within this standard?

The situation, as stated, indicates that the tripping action was intended to prevent low distribution voltage to a specific Load from a Transmission System that was intact, except for the line that was out of service, as opposed to preventing Cascading outage or Transmission System Collapse.

This standard is not applicable to this UVLS.

We have a UFLS or UVLS scheme that sheds the necessary Load through distribution-side circuit breakers and circuit reclosers. Do the trip-test requirements for circuit breakers apply to our situation?

No. Distributed tripping schemes would have to exhibit multiple failures to trip before they would prove to be significant, as opposed to a single failure to trip of, for example, a transmission Protection System bus differential lock-out relay. While many failures of these distribution breakers could add up to be significant, it is also believed that distribution breakers are operated often on just Fault clearing duty; and, therefore, the distribution circuit breakers are operated at least as frequently as any requirements that might have appeared in this standard.

We have a UFLS scheme that, in some locales, sheds the necessary Load through non-BES circuit breakers and, occasionally, even circuit switchers. Do the trip-test requirements for circuit breakers apply to our situation?

If your "non-BES circuit breaker" has been brought into this standard by the inclusion of UFLS requirements, and otherwise would not have been brought into this standard, then the answer is that there are no trip-test requirements. For these devices that are otherwise non-BES assets, these tripping schemes would have to exhibit multiple failures to trip before they would prove to be as significant as, for example, a single failure to trip of a transmission Protection System bus differential lock-out relay.

How does the "Facilities" section of "Applicability" track with the standards that will be retired once PRC-005-2 becomes effective?

In establishing PRC-005-2, the drafting team has combined legacy standards PRC-005-1, PRC-008-0, PRC-011-0, and PRC-017-0. The merger of the subject matter of these standards is reflected in Applicability 4.2.

The intent of the drafting team is that the legacy standards be reflected in PRC-005-2 as follows:

- Applicability of PRC-005-1 for Protection Systems relating to non-generator elements of the BES is addressed in 4.2.1;
- Applicability of PRC-008-0 for underfrequency load shedding systems is addressed in 4.2.2;
- Applicability of PRC-011-0 for undervoltage load shedding relays is addressed in 4.2.3;
- Applicability of PRC-017-0 for Special Protection Systems is addressed in 4.2.4;
- Applicability of PRC-005-1 for Protection Systems for BES generators is addressed in 4.2.5.

2.4 Applicable Relays

The NERC Glossary definition has a Protection System including relays, dc supply, current and voltage sensing devices, dc control circuitry and associated communications circuits. The relays to which this standard applies are those protective relays that respond to electrical quantities and provide a trip output to trip coils, dc control circuitry or associated communications equipment. This definition extends to IEEE Device No. 86 (lockout relay) and IEEE Device No. 94 (tripping or trip-free relay), as these devices are tripping relays that respond to the trip signal of the protective relay that processed the signals from the current and voltage-sensing devices.

Relays that respond to non-electrical inputs or impulses (such as, but not limited to, vibration, pressure, seismic, thermal or gas accumulation) are not included.

2.4.1 Frequently Asked Questions:

Are power circuit reclosers, reclosing relays, closing circuits and auto-restoration schemes covered in this Standard?

No. This standard covers protective relays that use electrical quantity measurements to determine anomalies and to trip a portion of the BES. Reclosers, reclosing relays, closing circuits and auto-restoration schemes are used to cause devices to close, as opposed to electrical-measurement relays and their associated circuits that cause circuit interruption from the BES; such closing devices and schemes are more appropriately covered under other NERC standards. There is one notable exception: Since PRC-017 will be superseded by PRC-005-2, then if a Special Protection System (previously covered by PRC-017) incorporates automatic closing of breakers, then the SPS-related closing devices must be tested accordingly.

I use my protective relays only as sources of metered quantities and breaker status for SCADA and EMS through a substation distributed RTU or data concentrator to the control center. What are the maintenance requirements for the relays?

This standard addresses Protection Systems that are installed for the purpose of detecting Faults on BES Elements (lines, buses, transformers, etc.). Protective relays, providing only the functions mentioned in the question, are not included.

Are Reverse Power Relays installed on the low-voltage side of distribution banks considered to be components of "Protection Systems that are installed for the purpose of detecting Faults on BES Elements (lines, buses, transformers, etc.)"?

Reverse power relays are often installed to detect situations where the transmission source becomes deenergized and the distribution bank remains energized from a source on the low-voltage side of the transformer and the settings are calculated based on the charging current of the transformer from the low-voltage side. Although these relays may operate as a result of a fault on a BES element, they are not 'installed for the purpose of detecting' these faults.

Is a Sudden Pressure Relay an auxiliary tripping relay?

No. IEEE C37.2-2008 assigns the Device No.# 94 to auxiliary tripping relays. Sudden pressure relays are assigned Device No.# 63. Sudden pressure relays are presently excluded from the standard because it does not utilize voltage and/or current measurements to determine anomalies. Devices that use anything other than electrical detection means are excluded. The trip path from a sudden pressure device is a part of the Protection System control circuitry. The sensing element is omitted from PRC-005-2 testing requirements because the SDT is unaware of industry-recognized testing protocol for the sensing elements. The SDT believes that Protection Systems that trip (or can trip) the BES should be included. This position is consistent with the currently-approved PRC-005-1a, consistent with the SAR for Project 2007-17, and understands this to be consistent with the position of FERC staff.

My mechanical device does not operate electrically and does not have calibration settings; what maintenance activities apply?

You must conduct a test(s) to verify the integrity of any trip circuit that is a part of a Protection System. This standard does not cover circuit breaker maintenance or transformer maintenance. The standard also does not presently cover testing of devices, such as sudden pressure relays (63), temperature relays (49), and other relays which respond to mechanical parameters, rather than electrical parameters. There is an expectation that Fault pressure relays and other non-electrically initiated devices may become part of some maintenance standard. This standard presently covers trip paths. It might seem incongruous to test a trip path without a present requirement to test the device; and, thus, be arguably more work for nothing. But one simple test to verify the integrity of such a trip path could be (but is not limited to) a voltage presence test, as a dc voltage monitor might do if it were installed monitoring that same circuit.

The standard specifically mentions auxiliary and lock-out relays. What is an auxiliary tripping relay?

An auxiliary relay, IEEE Device No.# 94, is described in IEEE Standard C37.2-2008 as: "A device that functions to trip a circuit breaker, contactor, or equipment; to permit immediate tripping by other devices; or to prevent immediate reclosing of a circuit interrupter if it should open automatically, even though its closing circuit is maintained closed."

What is a lock-out relay?

A lock-out relay, IEEE Device No.# 86, is described in IEEE Standard C37.2 as: "A device that trips and maintains the associated equipment or devices inoperative until it is reset by an operator, either locally or remotely."

3. Protection Systems Product Generations

The likelihood of failure and the ability to observe the operational state of a critical Protection System both depends on the technological generation of the relays, as well as how long they have been in service. Unlike many other transmission asset groups, protection and control systems have seen dramatic technological changes spanning several generations. During the past 20 years, major functional advances are primarily due to the introduction of microprocessor technology for power system devices, such as primary measuring relays, monitoring devices, control Systems, and telecommunications equipment.

Modern microprocessor-based relays have six significant traits that impact a maintenance strategy:

- Self monitoring capability - the processors can check themselves, peripheral circuits, and some connected substation inputs and outputs, such as trip coil continuity. Most relay users are aware that these relays have self monitoring, but are not focusing on exactly what internal functions are actually being monitored. As explained further below, every element critical to the Protection System must be monitored, or else verified periodically.
- Ability to capture Fault records showing how the Protection System responded to a Fault in its zone of protection, or to a nearby Fault for which it is required not to operate.
- Ability to meter currents and voltages, as well as status of connected circuit breakers, continuously during non-Fault times. The relays can compute values, such as MW and MVAR line flows, that are sometimes used for operational purposes, such as SCADA.
- Data communications via ports that provide remote access to all of the results of Protection System monitoring, recording and measurement.
- Ability to trip or close circuit breakers and switches through the Protection System outputs, on command from remote data communications messages, or from relay front panel button requests.
- Construction from electronic components, some of which have shorter technical life or service life than electromechanical components of prior Protection System generations.

There have been significant advances in the technology behind the other components of Protection Systems. Microprocessors are now a part of battery chargers, associated communications equipment, voltage and current-measuring devices, and even the control circuitry (in the form of software-latches replacing lock-out relays, etc.).

Any Protection System component can have self-monitoring and alarming capability, not just relays. Because of this technology, extended time intervals can find their way into all components of the Protection System.

This standard also recognizes the distinct advantage of using advanced technology to justifiably defer or even eliminate traditional maintenance. Just as a hand-held calculator does not require routine testing and calibration, neither does a calculation buried in a microprocessor-based device that results in a “lock-out.” Thus, the software-latch 86 that replaces an electro-

mechanical 86 does not require routine trip testing. Any trip circuitry associated with the "soft 86" would still need applicable verification activities performed, but the actual "86" does not have to be "electrically operated" or even toggled.

4. Definitions

Protection System Maintenance Program (PSMP) — An ongoing program by which Protection System components are kept in working order and proper operation of malfunctioning components is restored. A maintenance program for a specific component includes one or more of the following activities:

- Verify — Determine that the component is functioning correctly.
- Monitor — Observe the routine in-service operation of the component.
- Test — Apply signals to a component to observe functional performance or output behavior, or to diagnose problems.
- Inspect — Detect visible signs of component failure, reduced performance and degradation.
- Calibrate — Adjust the operating threshold or measurement accuracy of a measuring element to meet the intended performance requirement.
- Unresolved Maintenance Issue – A deficiency identified during a maintenance activity that causes the component to not meet the intended performance, cannot be corrected during the maintenance interval,and requires follow-up corrective action.
- Segment – Protection Systems or components of a consistent design standard, or a particular model or type from a single manufacturer that typically share other common elements. Consistent performance is expected across the entire population of a Segment. A Segment must contain at least sixty (60) individual components.
- Component Type - Any one of the five specific elements of the Protection System definition.
- Component – A Component is any individual discrete piece of equipment included in a Protection System, including but not limited to a protective relay or current sensing device. The designation of what constitutes a control circuit Component is dependent upon how an entity performs and tracks the testing of the control circuitry. Some entities test their control circuits on a breaker basis whereas others test their circuitry on a local zone of protection basis. Thus, entities are allowed the latitude to designate their own definitions of control circuit Components. Another example of where the entity has some discretion on determining what constitutes a single Component is the voltage and current sensing devices, where the entity may choose either to designate a full three-phase set of such devices or a single device as a single Component.*
- Countable Event – A failure of a Component requiring repair or replacement, any condition discovered during the maintenance activities in Tables 1-1 through 1-5 and Table 3 which requires corrective action or a Misoperation attributed to hardware failure or calibration failure. Misoperations due to productdesign errors, software errors, relay settings different from specified settings, Protection SystemComponent configuration errors, or Protection System application errors are not included in Countable Events.

4.1 Frequently Asked Questions:

Why does PRC-005-2 not specifically require maintenance and testing procedures, as reflected in the previous standard, PRC-005-1?

PRC-005-1 does not require detailed maintenance and testing procedures, but instead requires summaries of such procedures, and is not clear on what is actually required. PRC-005-2 requires a documented maintenance program, and is focused on establishing requirements rather than prescribing methodology to meet those requirements. Between the activities identified in the Tables 1-1 through 1-5, Table 2 and Table 3 (collectively the "Tables"), and the various components of the definition established for a "Protection System Maintenance Program," PRC-005-2 establishes the activities and time basis for a Protection System Maintenance Program to a level of detail not previously required.

Please clarify what is meant by "restore" in the definition of maintenance.

The description of "restore" in the definition of a Protection System Maintenance Program addresses corrective activities necessary to assure that the component is returned to working order following the discovery of its failure or malfunction. The Maintenance Activities specified in the Tables do not present any requirements related to Restoration; R5 of the standard does require that the entity "shall demonstrate efforts to correct any identified Unresolved Maintenance Issues." Some examples of restoration (or correction of Unresolved Maintenance Issues) include, but are not limited to, replacement of capacitors in distance relays to bring them to working order; replacement of relays, or other Protection System components, to bring the Protection System to working order; upgrade of electromechanical or solid-state protective relays to microprocessor-based relays following the discovery of failed components. Restoration, as used in this context, is not to be confused with restoration rules as used in system operations. Maintenance activity necessarily includes both the detection of problems and the repairs needed to eliminate those problems. This standard does not identify all of the Protection System problems that must be detected and eliminated, rather it is the intent of this standard that an entity determines the necessary working order for their various devices, and keeps them in working order. If an equipment item is repaired or replaced, then the entity can restart the maintenance-time-interval-clock, if desired; however, the replacement of equipment does not remove any documentation requirements that would have been required to verify compliance with time-interval requirements. In other words, do not discard maintenance data that goes to verify your work.

The retention of documentation for new and/or replaced equipment is all about proving that the maintenance intervals had been in compliance. For example, a long-range plan of upgrades might lead an entity to ignore required maintenance; retaining the evidence of prior maintenance that existed before any retirements and upgrades proves compliance with the standard.

Please clarify what is meant by "…demonstrate efforts to correct an Unresolved Maintenance Issue…"; why not measure the completion of the corrective action?

Management of completion of the identified Unresolved Maintenance Issue is a complex topic that falls outside of the scope of this standard. There can be any number of supply, process and management problems that make setting repair deadlines impossible. The SDT specifically chose the phrase "demonstrate efforts to correct" (with guidance from NERC Staff) because of the concern that many more complex Unresolved Maintenance Issues might require greater

than the remaining maintenance interval to resolve (and yet still be a "closed-end process"). For example, a problem might be identified on a VRLA battery during a six-month check. In instances such as one that requiring battery replacement as part of the long-term resolution, it is highly unlikely that the battery could be replaced in time to meet the six-calendar-month requirement for this maintenance activity. The SDT does not believe entities should be found in violation of a maintenance program requirement because of the inability to complete a remediation program within the original maintenance interval. The SDT does believe corrective actions should be timely, but concludes it would be impossible to postulate all possible remediation projects; and, therefore, impossible to specify bounding time frames for resolution of all possible Unresolved Maintenance Issues, or what documentation might be sufficient to provide proof that effective corrective action is being undertaken.

5. Time-Based Maintenance (TBM) Programs

Time-based maintenance is the process in which Protection Systems are maintained or verified according to a time schedule. The scheduled program often calls for technicians to travel to the physical site and perform a functional test on Protection System components. However, some components of a TBM program may be conducted from a remote location - for example, tripping a circuit breaker by communicating a trip command to a microprocessor relay to determine if the entire Protection System tripping chain is able to operate the breaker. Similarly, all Protection System components can have the ability to remotely conduct tests, either on-command or routinely; the running of these tests can extend the time interval between hands-on maintenance activities.

5.1 Maintenance Practices

Maintenance and testing programs often incorporate the following types of maintenance practices:

- TBM – time-based maintenance – externally prescribed maximum maintenance or testing intervals are applied for components or groups of components. The intervals may have been developed from prior experience or manufacturers' recommendations. The TBM verification interval is based on a variety of factors, including experience of the particular asset owner, collective experiences of several asset owners who are members of a country or regional council, etc. The maintenance intervals are fixed and may range in number of months or in years.

  TBM can include review of recent power system events near the particular terminal. Operating records may verify that some portion of the Protection System has operated correctly since the last test occurred. If specific protection scheme components have demonstrated correct performance within specifications, the maintenance test time clock can be reset for those components.

- PBM – Performance-Based Maintenance - intervals are established based on analytical or historical results of TBM failure rates on a statistically significant population of similar components. Some level of TBM is generally followed. Statistical analyses accompanied by adjustments to maintenance intervals are used to justify continued use of PBM-developed extended intervals when test failures or in-service failures occur infrequently.

- CBM – condition-based maintenance – continuously or frequently reported results from non-disruptive self-monitoring of components demonstrate operational status as those components remain in service. Whatever is verified by CBM does not require manual testing, but taking advantage of this requires precise technical focus on exactly what parts are included as part of the self-diagnostics. While the term "Condition-Based-Maintenance" (CBM) is no longer used within the standard itself, it is important to note that the concepts of CBM are a part of the standard (in the form of extended time intervals through status-monitoring). These extended time intervals are only allowed (in the absence of PBM) if the condition of the device is monitored (CBM). As a consequence of the "monitored-basis-time-intervals" existing within the standard, the explanatory discussions within this Supplementary Reference concerned with CBM will remain in this reference and are discussed as CBM.

Microprocessor-based Protection System components that perform continuous self-monitoring verify correct operation of most components within the device. Self-monitoring capabilities may include battery continuity, float voltages, unintentional grounds, the ac signal inputs to a relay, analog measuring circuits, processors and memory for measurement, protection, and data communications, trip circuit monitoring, and protection or data communications signals (and many, many more measurements). For those conditions, failure of a self-monitoring routine generates an alarm and may inhibit operation to avoid false trips. When internal components, such as critical output relay contacts, are not equipped with self-monitoring, they can be manually tested. The method of testing may be local or remote, or through inherent performance of the scheme during a system event.

The TBM is the overarching maintenance process of which the other types are subsets. Unlike TBM, PBM intervals are adjusted based on good or bad experiences. The CBM verification intervals can be hours, or even milliseconds between non-disruptive self-monitoring checks within or around components as they remain in service.

TBM, PBM, and CBM can be combined for individual components, or within a complete Protection System. The following diagram illustrates the relationship between various types of maintenance practices described in this section. In the Venn diagram, the overlapping regions show the relationship of TBM with PBM historical information and the inherent continuous monitoring offered through CBM.

This figure shows:

- Region 1: The TBM intervals that are increased based on known reported operational condition of individual components that are monitoring themselves.
- Region 2: The TBM intervals that are adjusted up or down based on results of analysis of maintenance history of statistically significant population of similar products that have been subject to TBM.
- Region 3: Optimal TBM intervals based on regions 1 and 2.

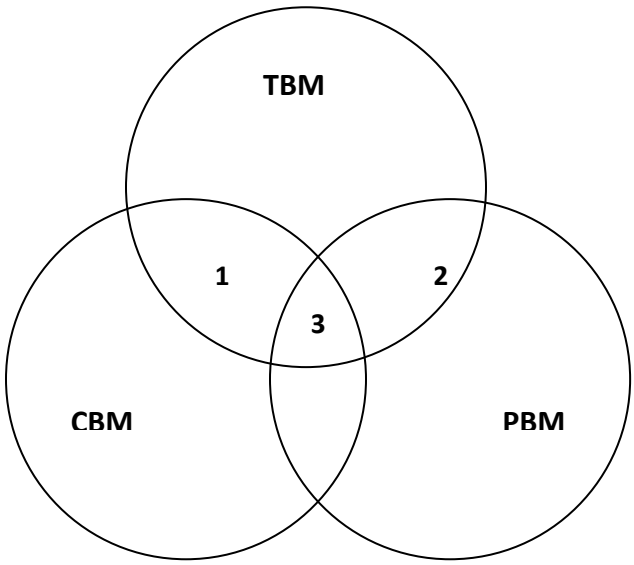

Relationship of time-based maintenance types

5.1.1 Frequently Asked Questions:

The standard seems very complicated, and is difficult to understand. Can it be simplified?

Because the standard is establishing parameters for condition-based Maintenance (R1) and Performance-Based Maintenance (R2), in addition to simple time-based Maintenance, it does appear to be complicated. At its simplest, an entity needs to ONLY perform time-based maintenance according to the unmonitored rows of the Tables. If an entity then wishes to take advantage of monitoring on its Protection System components and its available lengthened time intervals, then it may, as long as the component has the listed monitoring attributes. If an entity wishes to use historical performance of its Protection System components to perform Performance-Based Maintenance, then R2 applies.

Please see the following diagram, which provides a "flow chart" of the standard.

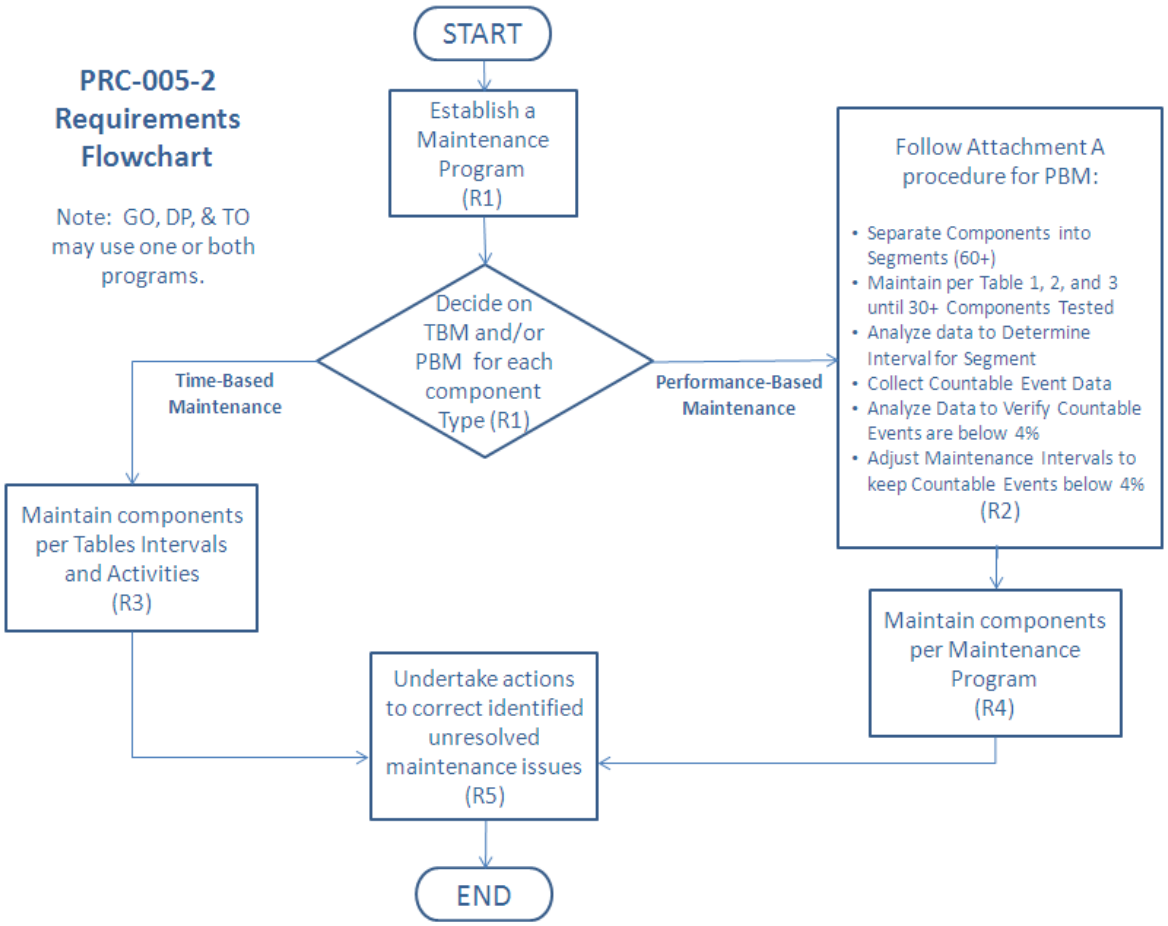

We have an electromechanical (unmonitored) relay that has a trip output to a lockout relay (unmonitored) which trips our transformer off-line by tripping the transformer's high-side and low-side circuit breakers. What testing must be done for this system?

This system is made up of components that are all unmonitored. Assuming a time-based Protection System maintenance program schedule (as opposed to a Performance-Based

maintenance program), each component must be maintained per the most frequent hands-on activities listed in the Tables.

5.2 Extending Time-Based Maintenance

All maintenance is fundamentally time-based. Default time-based intervals are commonly established to assure proper functioning of each component of the Protection System, when data on the reliability of the components is not available other than observations from time-based maintenance. The following factors may influence the established default intervals:

- If continuous indication of the functional condition of a component is available (from relays or chargers or any self-monitoring device), then the intervals may be extended, or manual testing may be eliminated. This is referred to as condition-based maintenance or CBM. CBM is valid only for precisely the components subject to monitoring. In the case of microprocessor-based relays, self-monitoring may not include automated diagnostics of every component within a microprocessor.
- Previous maintenance history for a group of components of a common type may indicate that the maintenance intervals can be extended, while still achieving the desired level of performance. This is referred to as Performance-Based Maintenance, or PBM. It is also sometimes referred to as reliability-centered maintenance, or RCM; but PBM is used in this document.
- Observed proper operation of a component may be regarded as a maintenance verification of the respective component or element in a microprocessor-based device. For such an observation, the maintenance interval may be reset only to the degree that can be verified by data available on the operation. For example, the trip of an electromechanical relay for a Fault verifies the trip contact and trip path, but only through the relays in series that actually operated; one operation of this relay cannot verify correct calibration.

Excessive maintenance can actually decrease the reliability of the component or system. It is not unusual to cause failure of a component by removing it from service and restoring it. The improper application of test signals may cause failure of a component. For example, in electromechanical overcurrent relays, test currents have been known to destroy convolution springs.

In addition, maintenance usually takes the component out of service, during which time it is not able to perform its function. Cutout switch failures, or failure to restore switch position, commonly lead to protection failures.

5.2.1 Frequently Asked Questions:

If I show the protective device out of service while it is being repaired, then can I add it back as a new protective device when it returns? If not, my relay testing history would show that I was out of compliance for the last maintenance cycle.

The maintenance and testing requirements (R5) (in essence) state "…shall demonstrate efforts to correct any identified Unresolved Maintenance Issues." The type of corrective activity is not stated; however it could include repairs or replacements.

Your documentation requirements will increase, of course, to demonstrate that your device tested bad and had corrective actions initiated. Your regional entity could very well ask for documentation showing status of your corrective actions.

6. Condition-Based Maintenance (CBM) Programs

Condition-based maintenance is the process of gathering and monitoring the information available from modern microprocessor-based relays and other intelligent electronic devices (IEDs) that monitor Protection System elements. These devices generate monitoring information during normal operation, and the information can be assessed at a convenient location remote from the substation. The information from these relays and IEDs is divided into two basic types:

1. Information can come from background self-monitoring processes, programmed by the manufacturer, or by the user in device logic settings. The results are presented by alarm contacts or points, front panel indications, and by data communications messages.
2. Information can come from event logs, captured files, and/or oscillographic records for Faults and Disturbances, metered values, and binary input status reports. Some of these are available on the device front panel display, but may be available via data communications ports. Large files of Fault information can only be retrieved via data communications. These results comprise a mass of data that must be further analyzed for evidence of the operational condition of the Protection System.

Using these two types of information, the user can develop an effective maintenance program carried out mostly from a central location remote from the substation. This approach offers the following advantages:

Non-invasive Maintenance: The system is kept in its normal operating state, without human intervention for checking. This reduces risk of damage, or risk of leaving the system in an inoperable state after a manual test. Experience has shown that keeping human hands away from equipment known to be working correctly enhances reliability.

Virtually Continuous Monitoring: CBM will report many hardware failure problems for repair within seconds or minutes of when they happen. This reduces the percentage of problems that are discovered through incorrect relaying performance. By contrast, a hardware failure discovered by TBM may have been there for much of the time interval between tests, and there is a good chance that some devices will show health problems by incorrect operation before being caught in the next test round. The frequent or continuous nature of CBM makes the effective verification interval far shorter than any required TBM maximum interval. To use the extended time intervals available through Condition Based Maintenance, simply look for the rows in the Tables that refer to monitored items.

6.1 Frequently Asked Questions:

My microprocessor relays and dc circuit alarms are contained on relay panels in a 24-hour attended control room. Does this qualify as an extended time interval condition-based (monitored) system?

Yes, provided the station attendant (plant operator, etc.) monitors the alarms and other indications (comparable to the monitoring attributes) and reports them within the given time limits that are stated in the criteria of the Tables.

When documenting the basis for inclusion of components into the appropriate levels of monitoring, as per Requirement R1 (Part 1.4) of the standard, is it necessary to provide this documentation about the device by listing of every component and the specific monitoring attributes of each device?

No. While maintaining this documentation on the device level would certainly be permissible, it is not necessary. Global statements can be made to document appropriate levels of monitoring for the entire population of a component type or portion thereof.

For example, it would be permissible to document the conclusion that all BES substation dc supply battery chargers are monitored by stating the following within the program description:

> "All substation dc supply battery chargers are considered monitored and subject to the rows for monitored equipment of Table 1-4 requirements, as all substation dc supply battery chargers are equipped with dc voltage alarms and ground detection alarms that are sent to the manned control center."

Similarly, it would be acceptable to use a combination of a global statement and a device-level list of exclusions. Example:

> "Except as noted below, all substation dc supply battery chargers are considered monitored and subject to the rows for monitored equipment of Table 1-4 requirements, as all substation dc supply battery chargers are equipped with dc voltage alarms and ground detection alarms that are sent to the manned control center. The dc supply battery chargers of Substation X, Substation Y, and Substation Z are considered unmonitored and subject to the rows for unmonitored equipment in Table 1-4 requirements, as they are not equipped with ground detection capability."

Regardless whether this documentation is provided by device listing of monitoring attributes, by global statements of the monitoring attributes of an entire population of component types, or by some combination of these methods, it should be noted that auditors may request supporting drawings or other documentation necessary to validate the inclusion of the device(s) within the appropriate level of monitoring. This supporting background information need not be maintained within the program document structure, but should be retrievable if requested by an auditor.

7. Time-Based Versus Condition-Based Maintenance

Time-based and condition-based (or monitored) maintenance programs are both acceptable, if implemented according to technically sound requirements. Practical programs can employ a *combination of time-based and condition-based maintenance.* The standard requirements introduce the concept of optionally using condition monitoring as a documented element of a maintenance program.

The Federal Energy Regulatory Commission (FERC), in its Order Number 693 Final Rule, dated March 16, 2007 (18 CFR Part 40, Docket No. RM06-16-000) on Mandatory Reliability Standards for the Bulk-Power System, directed NERC to submit a modification to PRC-005-1 that includes a requirement that maintenance and testing of a Protection System must be carried out within a maximum allowable interval that is appropriate to the type of the Protection System and its impact on the reliability of the Bulk Power System. Accordingly, this Supplementary Reference Paper refers to the specific maximum allowable intervals in PRC-005-2. The defined time limits allow for longer time intervals if the maintained component is monitored.

A key feature of condition-based monitoring is that it effectively reduces the time delay between the moment of a protection failure and time the Protection System owner knows about it, for the monitored segments of the Protection System. In some cases, the verification is practically continuous - the time interval between verifications is minutes or seconds. Thus, technically sound, condition-based verification, meets the verification requirements of the FERC order even more effectively than the strictly time-based tests of the same system components.

The result is that:

This NERC standard permits utilities to use a technically sound approach and to take advantage of remote monitoring, data analysis, and control capabilities of modern Protection Systems to reduce the need for periodic site visits and invasive testing of components by on-site technicians. This periodic testing must be conducted within the maximum time intervals specified in Tables 1-1 through 1-5 and Table 2 of PRC-005-2.

7.1 Frequently Asked Questions:

What is a Calendar Year?

Calendar Year - January 1 through December 31 of any year. As an example, if an event occurred on June 17, 2009 and is on a “One Calendar Year Interval,” the next event would have to occur on or before December 31, 2010.

Please provide an example of “4 Calendar Months”.

If a maintenance activity is described as being needed every four Calendar Months then it is performed in a (given) month and due again four months later. For example a battery bank is inspected in month number 1 then it is due again before the end of the month number5. And specifically consider that you perform your battery inspection on January 3, 2010 then it must be inspected again before the end of May. Another example could be that a four-month inspection was performed in January is due in May, but if performed in March (instead of May)

would still be due four months later therefore the activity is due again July. Basically every "four Calendar Months" means to add four months from the last time the activity was performed.

Please provide an example of the unmonitored versus other levels of monitoring available?

An unmonitored Protection System has no monitoring and alarm circuits on the Protection System components. A Protection System component that has monitoring attributes but no alarm output connected is considered to be unmonitored.

A monitored Protection System or an individual monitored component of a Protection System has monitoring and alarm circuits on the Protection System components. The alarm circuits must alert, within 24 hours, a location wherein corrective action can be initiated. This location might be, but is not limited to, an Operations Center, Dispatch Office, Maintenance Center or even a portable SCADA system.

There can be a combination of monitored and unmonitored Protection Systems within any given scheme, substation or plant; there can also be a combination of monitored and unmonitored components within any given Protection System.

Example #1: A combination of monitored and unmonitored components within a given Protection System might be:

- A microprocessor relay with an internal alarm connected to SCADA to alert 24-hr staffed operations center; it has internal self diagnosis and alarming. (monitored)
- Instrumentation transformers, with no monitoring, connected as inputs to that relay. (unmonitored)
- A vented Lead-Acid battery with a low voltage alarm for the station dc supply voltage and an unintentional grounds detection alarm connected to SCADA. (monitoring varies)
- A circuit breaker with a trip coil, and the trip circuit is not monitored. (unmonitored)

Given the particular components and conditions, and using Table 1 and Table 2, the particular components have maximum activity intervals of:

Every four calendar months, inspect:

- Electrolyte level (station dc supply voltage and unintentional ground detection is being maintained more frequently by the monitoring system).

Every 18 calendar months, verify/inspect the following:

- Battery bank ohmic values to station battery baseline (if performance tests are not opted)
- Battery charger float voltage
- Battery rack integrity
- Cell condition of all individual battery cells (where visible)
- Battery continuity
- Battery terminal connection resistance
- Battery cell-to-cell resistance (where available to measure)

Every six calendar years, perform/verify the following:

- Battery performance test (if internal ohmic tests or other measurements indicative of battery performance are not opted)
- Verify that each trip coil is able to operate the circuit breaker, interrupting device, or mitigating device
- For electromechanical lock-out relays, electrical operation of electromechanical trip

Every 12 calendar years, verify the following:

- Microprocessor relay settings are as specified
- Operation of the microprocessor's relay inputs and outputs that are essential to proper functioning of the Protection System
- Acceptable measurement of power System input values seen by the microprocessor protective relay
- Verify that current and voltage signal values are provided to the protective relays
- Protection System component monitoring for the battery system signals are conveyed to a location where corrective action can be initiated
- The microprocessor relay alarm signals are conveyed to a location where corrective action can be initiated
- Verify all trip paths in the control circuitry associated with protective functions through the trip coil(s) of the circuit breakers or other interrupting devices
- Auxiliary outputs that are in the trip path shall be maintained as detailed in Table 1-5 of the standard under the 'Unmonitored Control Circuitry Associated with Protective Functions" section'
- Auxiliary outputs not in a trip path (i.e., annunciation or DME input) are not required, by this standard, to be checked

Example #2: A combination of monitored and unmonitored components within a given Protection System might be:

- A microprocessor relay with integral alarm that is not connected to SCADA. (unmonitored)
- Current and voltage signal values, with no monitoring, connected as inputs to that relay. (unmonitored)
- A vented lead-acid battery with a low voltage alarm for the station dc supply voltage and an unintentional grounds detection alarm connected to SCADA. (monitoring varies)
- A circuit breaker with a trip coil, with no circuits monitored. (unmonitored)

Given the particular components and conditions, and using the Table 1 (Maximum Allowable Testing Intervals and Maintenance Activities) and Table 2 (Alarming Paths and Monitoring), the particular components have maximum activity intervals of:

Every four calendar months, inspect:

- Electrolyte level (station dc supply voltage and unintentional ground detection is being maintained more frequently by the monitoring system)

Every 18 calendar months, verify/inspect the following:

- Battery bank trending of ohmic values or other measurements indicative of battery performance to station battery baseline (if performance tests are not opted)
- Battery charger float voltage
- Battery rack integrity
- Cell condition of all individual battery cells (where visible)
- Battery continuity
- Battery terminal connection resistance
- Battery cell-to-cell resistance (where available to measure)

Every six calendar years, verify/perform the following:

- Verify operation of the relay inputs and outputs that are essential to proper functioning of the Protection System
- Verify acceptable measurement of power system input values as seen by the relays
- Verify that each trip coil is able to operate the circuit breaker, interrupting device, or mitigating device
- For electromechanical lock-out relays, electrical operation of electromechanical trip
- Battery performance test (if internal ohmic tests are not opted)

Every 12 calendar years, verify the following:

- Current and voltage signal values are provided to the protective relays
- Protection System component monitoring for the battery system signals are conveyed to a location where corrective action can be initiated
- All trip paths in the control circuitry associated with protective functions through the trip coil(s) of the circuit breakers or other interrupting devices
- Auxiliary outputs that are in the trip path shall be maintained, as detailed in Table 1-5 of the standard under the Unmonitored Control Circuitry Associated with Protective Functions" section
- Auxiliary outputs not in a trip path (i.e., annunciation or DME input) are not required, by this standard, to be checked

Example #3: A combination of monitored and unmonitored components within a given Protection System might be:

- A microprocessor relay with alarm connected to SCADA to alert 24-hr staffed operations center; it has internal self diagnosis and alarms. (monitored)
- Current and voltage signal values, with monitoring, connected as inputs to that relay (monitored)

- Vented Lead-Acid battery without any alarms connected to SCADA (unmonitored)
- Circuit breaker with a trip coil, with no circuits monitored (unmonitored)

Given the particular components, conditions, and using the Table 1 (Maximum Allowable Testing Intervals and Maintenance Activities) and Table 2 (Alarming Paths and Monitoring), the particular components shall have maximum activity intervals of:

Every four calendar months, verify/inspect the following:

- Station dc supply voltage
- For unintentional grounds
- Electrolyte level

Every 18 calendar months, verify/inspect the following:

- Battery bank trending of ohmic values or other measurements indicative of battery performance to station battery baseline (if performance tests are not opted)
- Battery charger float voltage
- Battery rack integrity
- Battery continuity
- Battery terminal connection resistance
- Battery cell-to-cell resistance (where available to measure)
- Condition of all individual battery cells (where visible)

Every six calendar years, perform/verify the following:

- Battery performance test (if internal ohmic tests or other measurements indicative of battery performance are not opted)
- Verify that each trip coil is able to operate the circuit breaker, interrupting device, or mitigating device
- For electromechanical lock-out relays, electrical operation of electromechanical trip

Every 12 calendar years, verify the following:

- The microprocessor relay alarm signals are conveyed to a location where corrective action can be taken
- Microprocessor relay settings are as specified
- Operation of the microprocessor's relay inputs and outputs that are essential to proper functioning of the Protection System
- Acceptable measurement of power system input values seen by the microprocessor protective relay
- Verify all trip paths in the control circuitry associated with protective functions through the trip coil(s) of the circuit breakers or other interrupting devices

- Auxiliary outputs that are in the trip path shall be maintained, as detailed in Table 1-5 of the standard under the Unmonitored Control Circuitry Associated with Protective Functions section
- Auxiliary outputs not in a trip path (i.e. annunciation or DME input) are not required, by this standard, to be checked

Why do components have different maintenance activities and intervals if they are monitored?

The intent behind different activities and intervals for monitored equipment is to allow less frequent manual intervention when more information is known about the condition of Protection System components. Condition-Based Maintenance is a valuable asset to improve reliability.

Can all components in a Protection System be monitored?

No. For some components in a Protection System, monitoring will not be relevant. For example, a battery will always need some kind of inspection.

We have a 30-year-old oil circuit breaker with a red indicating lamp on the substation relay panel that is illuminated only if there is continuity through the breaker trip coil. There is no SCADA monitor or relay monitor of this trip coil. The line protection relay package that trips this circuit breaker is a microprocessor relay that has an integral alarm relay that will assert on a number of conditions that includes a loss of power to the relay. This alarm contact connects to our SCADA system and alerts our 24-hour operations center of relay trouble when the alarm contact closes. This microprocessor relay trips the circuit breaker only and does not monitor trip coil continuity or other things such as trip current. Are the components monitored or not? How often must I perform maintenance?

The protective relay is monitored and can be maintained every 12 years, or when an Unresolved Maintenance Issue arises. The control circuitry can be maintained every 12 years. The circuit breaker trip coil(s) has to be electrically operated at least once every six years.

What is a mitigating device?

A mitigating device is the device that acts to respond as directed by a Special Protection System. It may be a breaker, valve, distributed control system, or any variety of other devices.

8. Maximum Allowable Verification Intervals

The maximum allowable testing intervals and maintenance activities show how CBM with newer device types can reduce the need for many of the tests and site visits that older Protection System components require. As explained below, there are some sections of the Protection System that monitoring or data analysis may not verify. Verifying these sections of the Protection Systems requires some persistent TBM activity in the maintenance program. However, some of this TBM can be carried out remotely - for example, exercising a circuit breaker through the relay tripping circuits using the relay remote control capabilities can be used to verify function of one tripping path and proper trip coil operation, if there has been no Fault or routine operation to demonstrate performance of relay tripping circuits.

8.1 Maintenance Tests

Periodic maintenance testing is performed to ensure that the protection and control system is operating correctly after a time period of field installation. These tests may be used to ensure that individual components are still operating within acceptable performance parameters - this type of test is needed for components susceptible to degraded or changing characteristics due to aging and wear. Full system performance tests may be used to confirm that the total Protection System functions from measurement of power system values, to properly identifying Fault characteristics, to the operation of the interrupting devices.

8.1.1 Table of Maximum Allowable Verification Intervals

Table 1 (collectively known as Table 1, individually called out as Tables 1-1 through 1-5), Table 2 and Table 3 in the standard specify maximum allowable verification intervals for various generations of Protection Systems and categories of equipment that comprise Protection Systems. The right column indicates maintenance activities required for each category.

The types of components are illustrated in Figures 1 and 2 at the end of this paper. Figure 1 shows an example of telecommunications-assisted transmission Protection System comprising substation equipment at each terminal and a telecommunications channel for relaying between the two substations. Figure 2 shows an example of a generation Protection System. The various sub-systems of a Protection System that need to be verified are shown.

Non-distributed UFLS, UVLS, and SPS are additional categories of Table 1 that are not illustrated in these figures. Non-distributed UFLS, UVLS and SPS all use identical equipment as Protection Systems in the performance of their functions; and, therefore, have the same maintenance needs.

Distributed UFLS and UVLS Systems, which use local sensing on the distribution System and trip co-located non-BES interrupting devices, are addressed in Table 3 with reduced maintenance activities.

While it is easy to associate protective relays to multiple levels of monitoring, it is also true that most of the components that can make up a Protection System can also have technological advancements that place them into higher levels of monitoring.

To use the Maintenance Activities and Intervals Tables from PRC-005-2:

- First find the Table associated with your component. The tables are arranged in the order of mention in the definition of Protection System;

- Table 1-1 is for protective relays,
- Table 1-2 is for the associated communications systems,
- Table 1-3 is for current and voltage sensing devices,
- Table 1-4 is for station dc supply and
- Table 1-5 is for control circuits.
- Table 2, is for alarms; this was broken out to simplify the other tables.
- Table 3 is for components which make-up distributed UFLS and UVLS Systems.

- Next look within that table for your device and its degree of monitoring. The Tables have different hands-on maintenance activities prescribed depending upon the degree to which you monitor your equipment. Find the maintenance activity that applies to the monitoring level that you have on your piece of equipment.
- This Maintenance activity is the minimum maintenance activity that must be documented.
- If your Performance-Based Maintenance (PBM) plan requires more activities, then you must perform and document to this higher standard. (Note that this does not apply unless you utilize PBM.)
- After the maintenance activity is known, check the maximum maintenance interval; this time is the maximum time allowed between hands-on maintenance activity cycles of this component.
- If your Performance-Based Maintenance plan requires activities more often than the Tables maximum, then you must perform and document those activities to your more stringent standard. (Note that this does not apply unless you utilize PBM.)
- Any given component of a Protection System can be determined to have a degree of monitoring that may be different from another component within that same Protection System. For example, in a given Protection System it is possible for an entity to have a monitored protective relay and an unmonitored associated communications system; this combination would require hands-on maintenance activity on the relay at least once every 12 years and attention paid to the communications system as often as every four months.
- An entity does not have to utilize the extended time intervals made available by this use of condition-based monitoring. An easy choice to make is to simply utilize the unmonitored level of maintenance made available on each of the five Tables. While the maintenance activities resulting from this choice would require more maintenance man-hours, the maintenance requirements may be simpler to document and the resulting maintenance plans may be easier to create.

For each Protection System component, Table 1 shows maximum allowable testing intervals for the various degrees of monitoring. These degrees of monitoring, or levels, range from the legacy unmonitored through a system that is more comprehensively monitored.

It has been noted here that an entity may have a PSMP that is more stringent than PRC-005-2. There may be any number of reasons that an entity chooses a more stringent plan than the

minimums prescribed within PRC-005-2, most notable of which is an entity using performance based maintenance methodology. If an entity has a Performance-Based Maintenance program, then that plan must be followed, even if the plan proves to be more stringent than the minimums laid out in the Tables.

8.1.2 Additional Notes for Tables 1-1 through 1-5 and Table 3

1. For electromechanical relays, adjustment is required to bring measurement accuracy within the tolerance needed by the asset owner. Microprocessor relays with no remote monitoring of alarm contacts, etc, are unmonitored relays and need to be verified within the Table interval as other unmonitored relays but may be verified as functional by means other than testing by simulated inputs.

2. Microprocessor relays typically are specified by manufacturers as not requiring calibration, but acceptable measurement of power system input values must be verified (verification of the Analog to Digital [A/D] converters) within the Table intervals. The integrity of the digital inputs and outputs that are used as protective functions must be verified within the Table intervals.

3. Any Phasor Measurement Unit (PMU) function whose output is used in a Protection System or SPS (as opposed to a monitoring task) must be verified as a component in a Protection System.

4. In addition to verifying the circuitry that supplies dc to the Protection System, the owner must maintain the station dc supply. The most widespread station dc supply is the station battery and charger. Unlike most Protection System components, physical inspection of station batteries for signs of component failure, reduced performance, and degradation are required to ensure that the station battery is reliable enough to deliver dc power when required. IEEE Standards 450, 1188, and 1106 for vented lead-acid, valve-regulated lead-acid, and nickel-cadmium batteries, respectively (which are the most commonly used substation batteries on the NERC BES) have been developed as an important reference source of maintenance recommendations. The Protection System owner might want to follow the guidelines in the applicable IEEE recommended practices for battery maintenance and testing, especially if the battery in question is used for application requirements in addition to the protection and control demands covered under this standard. However, the Standard Drafting Team has tailored the battery maintenance and testing guidelines in PRC-005-2 for the Protection System owner which are application specific for the BES Facilities. While the IEEE recommendations are all encompassing, PRC-005-2 is a more economical approach while addressing the reliability requirements of the BES.

5. Aggregated small entities might distribute the testing of the population of UFLS/UVLS systems, and large entities will usually maintain a portion of these systems in any given year. Additionally, if relatively small quantities of such systems do not perform properly, it will not affect the integrity of the overall program. Thus, these distributed systems have decreased requirements as compared to other Protection Systems.

6. Voltage & current sensing device circuit input connections to the Protection System relays can be verified by (but not limited to) comparison of measured values on live circuits or by using test currents and voltages on equipment out of service for maintenance. The verification process can be automated or manual. The values should

be verified to be as expected (phase value and phase relationships are both equally important to verify).

7. "End-to-end test," as used in this Supplementary Reference, is any testing procedure that creates a remote input to the local communications-assisted trip scheme. While this can be interpreted as a GPS-type functional test, it is not limited to testing via GPS. Any remote scheme manipulation that can cause action at the local trip path can be used to functionally-test the dc control circuitry. A documented Real-time trip of any given trip path is acceptable in lieu of a functional trip test. It is possible, with sufficient monitoring, to be able to verify each and every parallel trip path that participated in any given dc control circuit trip. Or another possible solution is that a single trip path from a single monitored relay can be verified to be the trip path that successfully tripped during a Real-time operation. The variations are only limited by the degree of engineering and monitoring that an entity desires to pursue.
8. A/D verification may use relay front panel value displays, or values gathered via data communications. Groupings of other measurements (such as vector summation of bus feeder currents) can be used for comparison if calibration requirements assure acceptable measurement of power system input values.
9. Notes 1-8 attempt to describe some testing activities; they do not represent the only methods to achieve these activities, but rather some possible methods. Technological advances, ingenuity and/or industry accepted techniques can all be used to satisfy maintenance activity requirements; the standard is technology- and method-neutral in most cases.

8.1.3 Frequently Asked Questions:

What is meant by "Verify that settings are as specified" maintenance activity in Table 1-1?

Verification of settings is an activity directed mostly towards microprocessor- based relays. For relay maintenance departments that choose to test microprocessor-based relays in the same manner as electromechanical relays are tested, the testing process sometimes requires that some specific functions be disabled. Later tests might enable the functions previously disabled, but perhaps still other functions or logic statements were then masked out. It is imperative that, when the relay is placed into service, the settings in the relay be the settings that were intended to be in that relay or as the standard states "…settings are as specified."

Many of the microprocessor- based relays available today have software tools which provide this functionality and generate reports for this purpose.

For evidence or documentation of this requirement, a simple recorded acknowledgement that the settings were checked to be as specified is sufficient.

The drafting team was careful not to require "…that the relay settings be correct…" because it was believed that this might then place a burden of proof that the specified settings would result in the correct intended operation of the interrupting device. While that is a noble intention, the measurable proof of such a requirement is immense. The intent is that settings of the component be as specified at the conclusion of maintenance activities, whether those settings may have "drifted" since the prior maintenance or whether changes were made as part of the testing process.

Are electromechanical relays included in the "Verify that settings are as specified" maintenance activity in Table 1-1?

Verification of settings is an activity directed towards the application of protection related functions of microprocessor based relays. Electromechanical relays require calibration verification by voltage and/or current injection; and, thus, the settings are verified during calibration activity. In the example of a time-overcurrent relay, a minor deviation in time dial, versus the settings, may be acceptable, as long as the relay calibration is within accepted tolerances at the injected current amplitudes. A major deviation may require further investigation, as it could indicate a problem with the relay or an incorrect relay style for the application.

The verification of phase current and voltage measurements by comparison to other quantities seems reasonable. How, though, can I verify residual or neutral currents, or 3V0 voltages, by comparison, when my system is closely balanced?

Since these inputs are verified at commissioning, maintenance verification requires ensuring that phase quantities are as expected and that 3IO and 3VO quantities appear equal to or close to 0.

These quantities also may be verified by use of oscillographic records for connected microprocessor relays as recorded during system Disturbances. Such records may compare to similar values recorded at other locations by other microprocessor relays for the same event, or compared to expected values (from short circuit studies) for known Fault locations.

What does this Standard require for testing an auxiliary tripping relay?

Table 1 and Table 3 requires that a trip test must verify that the auxiliary tripping relay(s) and/or lockout relay(s) which are directly in a trip path from the protective relay to the interrupting device trip coil operate(s) electrically. Auxiliary outputs not in a trip path (i.e. annunciation or DME input) are not required, by this standard, to be checked.

Do I have to perform a full end-to-end test of a Special Protection System?

No. All portions of the SPS need to be maintained, and the portions must overlap, but the overall SPS does not need to have a single end-to-end test. In other words it may be tested in piecemeal fashion provided all of the pieces are verified.

What about SPS interfaces between different entities or owners?

As in all of the Protection System requirements, SPS segments can be tested individually, thus minimizing the need to accommodate complex maintenance schedules.

What do I have to do if I am using a phasor measurement unit (PMU) as part of a Protection System or Special Protection System?

Any Phasor Measurement Unit (PMU) function whose output is used in a Protection System or Special Protection System (as opposed to a monitoring task) must be verified as a component in a Protection System.

How do I maintain a Special Protection System or relay sensing for non-distributed UFLS or UVLS Systems?

Since components of the SPS, UFLS and UVLS are the same types of components as those in Protection Systems, then these components should be maintained like similar components used for other Protection System functions. In many cases the devices for SPS, UFLS and UVLS

are also used for other protective functions. The same maintenance activities apply with the exception that distributed systems (UFLS and UVLS) have fewer dc supply and control circuitry maintenance activity requirements.

For the testing of the output action, verification may be by breaker tripping, but may be verified in overlapping segments. For example, an SPS that trips a remote circuit breaker might be tested by testing the various parts of the scheme in overlapping segments. Another method is to document the Real-time tripping of an SPS scheme should that occur. Forced trip tests of circuit breakers (etc) that are a part of distributed UFLS or UVLS schemes are not required.

The established maximum allowable intervals do not align well with the scheduled outages for my power plant. Can I extend the maintenance to the next scheduled outage following the established maximum interval?

No. You must complete your maintenance within the established maximum allowable intervals in order to be compliant. You will need to schedule your maintenance during available outages to complete your maintenance as required, even if it means that you may do protective relay maintenance more frequently than the maximum allowable intervals. The maintenance intervals were selected with typical plant outages, among other things, in mind.

If I am unable to complete the maintenance, as required, due to a major natural disaster (hurricane, earthquake, etc.), how will this affect my compliance with this standard?

The Sanction Guidelines of the North American Electric Reliability Corporation, effective January 15, 2008, provides that the Compliance Monitor will consider extenuating circumstances when considering any sanctions.

What if my observed testing results show a high incidence of out-of-tolerance relays; or, even worse, I am experiencing numerous relay Misoperations due to the relays being out-of-tolerance?

The established maximum time intervals are mandatory only as a not-to-exceed limitation. The establishment of a maximum is measurable. But any entity can choose to test some or all of their Protection System components more frequently (or to express it differently, exceed the minimum requirements of the standard). Particularly if you find that the maximum intervals in the standard do not achieve your expected level of performance, it is understandable that you would maintain the related equipment more frequently. A high incidence of relay Misoperations is in no one's best interest.

We believe that the four-month interval between inspections is unneccessary. Why can we not perform these inspections twice per year?

The Standard Drafting Team, through the comment process, has discovered that routine monthly inspections are not the norm. To align routine station inspections with other important inspections, the four-month interval was chosen. In lieu of station visits, many activities can be accomplished with automated monitoring and alarming.

Our maintenance plan calls for us to perform routine protective relay tests every 3 years. If we are unable to achieve this schedule, but we are able to complete the procedures in less than the maximum time interval ,then are we in or out of compliance?

According to R3, if you have a time-based maintenance program, then you will be in violation of the standard only if you exceed the maximum maintenance intervals prescribed in the Tables. According to R4, if your device in question is part of a Performance-Based Maintenance program, then you will be in violation of the standard if you fail to meet your PSMP, even if you do not exceed the maximum maintenance intervals prescribed in the Tables. The intervals in the Tables are associated with TBM and CBM; Attachment A is associated with PBM.

Please provide a sample list of devices or systems that must be verified in a generator, generator step-up transformer, generator connected station service or generator connected excitation transformer to meet the requirements of this maintenance standard.

Examples of typical devices and systems that may directly trip the generator, or trip through a lockout relay, may include, but are not necessarily limited to:

- Fault protective functions, including distance functions, voltage-restrained overcurrent functions, or voltage-controlled overcurrent functions
- Loss-of-field relays
- Volts-per-hertz relays
- Negative sequence overcurrent relays
- Over voltage and under voltage protection relays
- Stator-ground relays
- Communications-based Protection Systems such as transfer-trip systems
- Generator differential relays
- Reverse power relays
- Frequency relays
- Out-of-step relays
- Inadvertent energization protection
- Breaker failure protection

For generator step-up, generator-connected station service transformers, or generator connected excitation transformers, operation of any of the following associated protective relays frequently would result in a trip of the generating unit; and, as such, would be included in the program:

- Transformer differential relays
- Neutral overcurrent relay
- Phase overcurrent relays

Relays which trip breakers serving station auxiliary Loads such as pumps, fans, or fuel handling equipment, etc., need not be included in the program, even if the loss of the those Loads could result in a trip of the generating unit. Furthermore, relays which provide protection to secondary unit substation (SUS) or low switchgear transformers and relays protecting other downstream plant electrical distribution system components are not included in the scope of

this program, even if a trip of these devices might eventually result in a trip of the generating unit. For example, a thermal overcurrent trip on the motor of a coal-conveyor belt could eventually lead to the tripping of the generator, but it does not cause the trip.

In the case where a plant does not have a generator connected station service transformer such that it is normally fed from a system connected station service transformer, is it still the drafting team's intent to exclude the Protection Systems for these system connected auxiliary transformers from scope even when the loss of the normal (system connected) station service transformer will result in a trip of a BES generating Facility?

The SDT does not intend that the system-connected station service transformers be included in the Applicability. The generator-connected station service transformers and generator connected excitation transformers are often connected to the generator bus directly without an interposing breaker; thus, the Protection Systems on these transformers will trip the generator as discussed in 4.2.5.1.

What is meant by "verify operation of the relay inputs and outputs that are essential to proper functioning of the Protection System?"

Any input or output (of the relay) that "affects the tripping" of the breaker is included in the scope of I/O of the relay to be verified. By "affects the tripping," one needs to realize that sometimes there are more inputs and outputs than simply the output to the trip coil. Many important protective functions include things like breaker fail initiation, zone timer initiation and sometimes even 52a/b contact inputs are needed for a protective relay to correctly operate.

Each input should be "picked up" or "turned on and off" and verified as changing state by the microprocessor of the relay. Each output should be "operated" or "closed and opened" from the microprocessor of the relay and the output should be verified to change state on the output terminals of the relay. One possible method of testing inputs of these relays is to "jumper" the needed dc voltage to the input and verify that the relay registered the change of state.

Electromechanical lock-out relays (86) (used to convey the tripping current to the trip coils) need to be electrically operated to prove the capability of the device to change state. These tests need to be accomplished at least every six years, unless PBM methodology is applied.

The contacts on the 86 or auxiliary tripping relays (94) that change state to pass on the trip current to a breaker trip coil need only be checked every 12 years with the control circuitry.

What is the difference between a distributed UFLS/UVLS and a non-distributed UFLS/UVLS scheme?

A distributed UFLS or UVLS scheme contains individual relays which make independent Load shed decisions based on applied settings and localized voltage and/or current inputs. A distributed scheme may involve an enable/disable contact in the scheme and still be considered a distributed scheme. A non-distributed UFLS or UVLS scheme involves a system where there is some type of centralized measurement and Load shed decision being made. A non-distributed UFLS/UVLS scheme is considered similar to an SPS scheme and falls under Table 1 for maintenance activities and intervals.

8.2 Retention of Records

PRC-005-1 describes a reporting or auditing cycle of one year and retention of records for three years. However, with a three-year retention cycle, the records of verification for a Protection System might be discarded before the next verification, leaving no record of what was done if a Misoperation or failure is to be analyzed.

PRC-005-2 corrects this by requiring:

The Transmission Owner, Generator Owner, and Distribution Provider shall each retain documentation of the two most recent performances of each distinct maintenance activity for the Protection System components, or to the previous scheduled (on-site) audit date, whichever is longer.

This requirement assures that the documentation shows that the interval between maintenance cycles correctly meets the maintenance interval limits. The requirement is actually alerting the industry to documentation requirements already implemented by audit teams. Evidence of compliance bookending the interval shows interval accomplished instead of proving only your planned interval.

The SDT is aware that, in some cases, the retention period could be relatively long. But, the retention of documents simply helps to demonstrate compliance.

8.2.1 Frequently Asked Questions:

Please use a specific example to demonstrate the data retention requirements.

The data retention requirements are intended to allow the availability of maintenance records to demonstrate that the time intervals in your maintenance plan were upheld. For example: "Company A" has a maintenance plan that requires its electromechanical protective relays be tested every three calendar years, with a maximum allowed grace period of an additional 18 months. This entity would be required to maintain its records of maintenance of its last two routine scheduled tests. Thus, its test records would have a latest routine test, as well as its previous routine test. The interval between tests is, therefore, provable to an auditor as being within "Company A's" stated maximum time interval of 4.5 years.

The intent is not to require three test results proving two time intervals, but rather have two test results proving the last interval. The drafting team contends that this minimizes storage requirements, while still having minimum data available to demonstrate compliance with time intervals.

If an entity prefers to utilize Performance-Based Maintenance, then statistical data may well be retained for extended periods to assist with future adjustments in time intervals.

If an equipment item is replaced, then the entity can restart the maintenance-time-interval-clock if desired; however, the replacement of equipment does not remove any documentation requirements that would have been required to verify compliance with time-interval requirements. In other words, do not discard maintenance data that goes to verify your work.

The retention of documentation for new and/or replaced equipment is all about proving that the maintenance intervals had been in compliance. For example, a long-range plan of upgrades might lead an entity to ignore required maintenance; retaining the evidence of prior maintenance that existed before any retirements and upgrades proves compliance with the standard.

What does this Maintenance Standard say about commissioning? Is it necessary to have documentation in your maintenance history of the completion of commission testing?

This standard does not establish requirements for commission testing. Commission testing includes all testing activities necessary to conclude that a Facility has been built in accordance with design. While a thorough commission testing program would include, either directly or indirectly, the verification of all those Protection System attributes addressed by the maintenance activities specified in the Tables of PRC-005-2, verification of the adequacy of initial installation necessitates the performance of testing and inspections that go well beyond these routine maintenance activities. For example, commission testing might set baselines for future tests; perform acceptance tests and/or warranty tests; utilize testing methods that are not generally done routinely like staged-Fault-tests.

However, many of the Protection System attributes which are verified during commission testing are not subject to age related or service related degradation, and need not be re-verified within an ongoing maintenance program. Example – it is not necessary to re-verify correct terminal strip wiring on an ongoing basis.

PRC-005-2 assumes that thorough commission testing was performed prior to a Protection System being placed in service. PRC-005-2 requires performance of maintenance activities that are deemed necessary to detect and correct plausible age and service related degradation of components, such that a properly built and commission tested Protection System will continue to function as designed over its service life.

It should be noted that commission testing frequently is performed by a different organization than that which is responsible for the ongoing maintenance of the Protection System. Furthermore, the commission testing activities will not necessarily correlate directly with the maintenance activities required by the standard. As such, it is very likely that commission testing records will deviate significantly from maintenance records in both form and content; and, therefore, it is not necessary to maintain commission testing records within the maintenance program documentation.

Notwithstanding the differences in records, an entity would be wise to retain commissioning records to show a maintenance start date. (See below). An entity that requires that their commissioning tests have, at a minimum, the requirements of PRC-005-2 would help that entity prove time interval maximums by setting the initial time clock.

How do you determine the initial due date for maintenance?

The initial due date for maintenance should be based upon when a Protection System was tested. Alternatively, an entity may choose to use the date of completion of the commission testing of the Protection System component and the system was placed into service as the starting point in determining its first maintenance due dates. Whichever method is chosen, for newly installed Protection Systems the components should not be placed into service until minimum maintenance activities have taken place.

It is conceivable that there can be a (substantial) difference in time between the date of testing, as compared to the date placed into service. The use of the “Calendar Year” language can help determine the next due date without too much concern about being non-compliant for missing test dates by a small amount (provided your dates are not already at the end of a year). However, if there is a substantial amount of time difference between testing and in-service

dates, then the testing date should be followed because it is the degradation of components that is the concern. While accuracy fluctuations may decrease when components are not energized, there are cases when degradation can take place, even though the device is not energized. Minimizing the time between commissioning tests and in-service dates will help.

If I miss two battery inspections four times out of 100 Protection System components on my transmission system, does that count as 2% or 8% when counting Violation Severity Level (VSL) for R3?

The entity failed to complete its scheduled program on two of its 100 Protection System components, which would equate to 2% for application to the VSL Table for Requirement R3. This VSL is written to compare missed components to total components. In this case two components out of 100 were missed, or 2%.

How do I achieve a "grace period" without being out of compliance?

The objective here is to create a time extension within your own PSMP that still does not violate the maximum time intervals stated in the standard. Remember that the maximum time intervals listed in the Tables cannot be extended.

For the purposes of this example, concentrating on just unmonitored protective relays – Table 1-1 specifies a maximum time interval (between the mandated maintenance activities) of six calendar years. Your plan must ensure that your unmonitored relays are tested at least once every six calendar years. You could, within your PSMP, require that your unmonitored relays be tested every four calendar years, with a maximum allowable time extension of 18 calendar months. This allows an entity to have deadlines set for the auto-generation of work orders, but still has the flexibility in scheduling complex work schedules. This also allows for that 18 calendar months to act as a buffer, in effect a grace period within your PSMP, in the event of unforeseen events. You will note that this example of a maintenance plan interval has a planned time of four years; it also has a built-in time extension allowed within the PSMP, and yet does not exceed the maximum time interval allowed by the standard. So while there are no time extensions allowed beyond the standard, an entity can still have substantial flexibility to maintain their Protection System components.

8.3 Basis for Table 1 Intervals

When developing the original *Protection System Maintenance – A Technical Reference* in 2007, the SPCTF collected all available data from Regional Entities (REs) on time intervals recommended for maintenance and test programs. The recommendations vary widely in categorization of relays, defined maintenance actions, and time intervals, precluding development of intervals by averaging. The SPCTF also reviewed the 2005 Report [2] of the IEEE Power System Relaying Committee Working Group I-17 (Transmission Relay System Performance Comparison). Review of the I-17 report shows data from a small number of utilities, with no company identification or means of investigating the significance of particular results.

To develop a solid current base of practice, the SPCTF surveyed its members regarding their maintenance intervals for electromechanical and microprocessor relays, and asked the members to also provide definitively-known data for other entities. The survey represented 470 GW of peak Load, or 4% of the NERC peak Load. Maintenance interval averages were compiled by weighting reported intervals according to the size (based on peak Load) of the reporting

utility. Thus, the averages more accurately represent practices for the large populations of Protection Systems used across the NERC regions.

The results of this survey with weighted averaging indicate maintenance intervals of five years for electromechanical or solid state relays, and seven years for unmonitored microprocessor relays.

A number of utilities have extended maintenance intervals for microprocessor relays beyond seven years, based on favorable experience with the particular products they have installed. To provide a technical basis for such extension, the SPCTF authors developed a recommendation of 10 years using the Markov modeling approach from [1], as summarized in Section 8.4. The results of this modeling depend on the completeness of self-testing or monitoring. Accordingly, this extended interval is allowed by Table 1, only when such relays are monitored as specified in the attributes of monitoring contained in Tables 1-1 through 1-5 and Table 2. Monitoring is capable of reporting Protection System health issues that are likely to affect performance within the 10 year time interval between verifications.

It is important to note that, according to modeling results, Protection System availability barely changes as the maintenance interval is varied below the 10-year mark. Thus, reducing the maintenance interval does not improve Protection System availability. With the assumptions of the model regarding how maintenance is carried out, reducing the maintenance interval actually degrades Protection System availability.

8.4 Basis for Extended Maintenance Intervals for Microprocessor Relays

Table 1 allows maximum verification intervals that are extended based on monitoring level. The industry has experience with self-monitoring microprocessor relays that leads to the Table 1 value for a monitored relay, as explained in Section 8.3. To develop a basis for the maximum interval for monitored relays in their *Protection System Maintenance – A Technical Reference*, the SPCTF used the methodology of Reference [1], which specifically addresses optimum routine maintenance intervals. The Markov modeling approach of [1] is judged to be valid for the design and typical failure modes of microprocessor relays.

The SPCTF authors ran test cases of the Markov model to calculate two key probability measures:

- Relay Unavailability - the probability that the relay is out of service due to failure or maintenance activity while the power system Element to be protected is in service.
- Abnormal Unavailability - the probability that the relay is out of service due to failure or maintenance activity when a Fault occurs, leading to failure to operate for the Fault.

The parameter in the Markov model that defines self-monitoring capability is ST (for self test). ST = 0 if there is no self-monitoring; ST = 1 for full monitoring. Practical ST values are estimated to range from .75 to .95. The SPCTF simulation runs used constants in the Markov model that were the same as those used in [1] with the following exceptions:

Sn, Normal tripping operations per hour = 21600 (reciprocal of normal Fault clearing time of 10 cycles)

Sb, Backup tripping operations per hour = 4320 (reciprocal of backup Fault clearing time of 50 cycles)

Rc, Protected component repairs per hour = 0.125 (8 hours to restore the power system)

Rt, Relay routine tests per hour = 0.125 (8 hours to test a Protection System)

Rr, Relay repairs per hour = 0.08333 (12 hours to complete a Protection System repair after failure)

Experimental runs of the model showed low sensitivity of optimum maintenance interval to these parameter adjustments.

The resulting curves for relay unavailability and abnormal unavailability versus maintenance interval showed a broad minimum (optimum maintenance interval) in the vicinity of 10 years – the curve is flat, with no significant change in either unavailability value over the range of 9, 10, or 11 years. This was true even for a relay mean time between Failures (MTBF) of 50 years, much lower than MTBF values typically published for these relays. Also, the Markov modeling indicates that both the relay unavailability and abnormal unavailability actually become higher with more frequent testing. This shows that the time spent on these more frequent tests yields no failure discoveries that approach the negative impact of removing the relays from service and running the tests.

The PSMT SDT discussed the practical need for "time-interval extensions" or "grace periods" to allow for scheduling problems that resulted from any number of business contingencies. The time interval discussions also focused on the need to reflect industry norms surrounding Generator outage frequencies. Finally, it was again noted that FERC Order 693 demanded maximum time intervals. "Maximum time intervals" by their very term negates any "time-interval extension" or "grace periods." To recognize the need to follow industry norms on Generator outage frequencies and accommodate a form of time-interval extension, while still following FERC Order 693, the Standard Drafting Team arrived at a six-year interval for the electromechanical relay, instead of the five-year interval arrived at by the SPCTF. The PSMT SDT has followed the FERC directive for a *maximum* time interval and has determined that no extensions will be allowed. Six years has been set for the maximum time interval between manual maintenance activities. This maximum time interval also works well for maintenance cycles that have been in use in generator plants for decades.

For monitored relays, the PSMT SDT notes that the SPCTF called for 10 years as the interval between maintenance activities. This 10-year interval was chosen, even though there was "…no significant change in unavailability value over the range of 9, 10, or 11 years. This was true even for a relay Mean Time between Failures (MTBF) of 50 years…" The Standard Drafting Team again sought to align maintenance activities with known successful practices and outage schedules. The Standard does not allow extensions on any component of the Protection System; thus, the maximum allowed interval for these components has been set to 12 years. Twelve years also fits well into the traditional maintenance cycles of both substations and generator plants.

Also of note is the Table's use of the term "Calendar" in the column for "Maximum Maintenance Interval." The PSMT SDT deemed it necessary to include the term "Calendar" to facilitate annual maintenance planning, scheduling and implementation. This need is the result of known occurrences of system requirements that could cause maintenance schedules to be missed by a few days or weeks. The PSMT SDT chose the term "Calendar" to preclude the need to have schedules be met to the day. An electromechanical protective relay that is maintained in year number one need not be revisited until six years later (year number seven). For

example, a relay was maintained April 10, 2008; maintenance would need to be completed no later than December 31, 2014.

Though not a requirement of this standard, to stay in line with many Compliance Enforcement Agencies audit processes an entity should define, within their own PSMP, the entity's use of terms like annual, calendar year, etc. Then, once this is within the PSMP, the entity should abide by their chosen language.

9. Performance-Based Maintenance Process

In lieu of using the Table 1 intervals, a Performance-Based Maintenance process may be used to establish maintenance intervals (*PRC-005 Attachment A Criteria for a Performance-Based Protection System Maintenance Program*). A Performance-Based Maintenance process may justify longer maintenance intervals, or require shorter intervals relative to Table 1. In order to use a Performance-Based Maintenance process, the documented maintenance program must include records of repairs, adjustments, and corrections to covered Protection Systems in order to provide historical justification for intervals, other than those established in Table 1. Furthermore, the asset owner must regularly analyze these records of corrective actions to develop a ranking of causes. Recurrent problems are to be highlighted, and remedial action plans are to be documented to mitigate or eliminate recurrent problems.

Entities with Performance-Based Maintenance track performance of Protection Systems, demonstrate how they analyze findings of performance failures and aberrations, and implement continuous improvement actions. Since no maintenance program can ever guarantee that no malfunction can possibly occur, documentation of a Performance-Based Maintenance program would serve the utility well in explaining to regulators and the public a Misoperation leading to a major System outage event.

A Performance-Based Maintenance program requires auditing processes like those included in widely used industrial quality systems (such as ***ISO 9001-2000, Quality Management Systems — Requirements;*** or applicable parts of the NIST Baldridge National Quality Program). The audits periodically evaluate:

- The completeness of the documented maintenance process
- Organizational knowledge of and adherence to the process
- Performance metrics and documentation of results
- Remediation of issues
- Demonstration of continuous improvement.

In order to opt into a Performance-Based Maintenance (PBM) program, the asset owner must first sort the various Protection System components into population segments. Any population segment must be comprised of at least 60 individual units; if any asset owner opts for PBM, but does not own 60 units to comprise a population, then that asset owner may combine data from other asset owners until the needed 60 units is aggregated. Each population segment must be composed of a grouping of Protection Systems or components of a consistent design standard or particular model or type from a single manufacturer and subjected to similar environmental factors. For example: One segment cannot be comprised of both GE & Westinghouse electro-mechanical lock-out relays; likewise, one segment cannot be comprised of 60 GE lock-out relays, 30 of which are in a dirty environment, and the remaining 30 from a clean environment. This PBM process cannot be applied to batteries, but can be applied to all other components of a Protection System, including (but not limited to) specific battery chargers, instrument transformers, trip coils and/or control circuitry (etc.).

9.1 Minimum Sample Size

Large Sample Size

An assumption that needs to be made when choosing a sample size is "the sampling distribution of the sample mean can be approximated by a normal probability distribution." The Central Limit Theorem states: "In selecting simple random samples of size *n* from a population, the sampling distribution of the sample mean *x* can be approximated by a normal probability distribution as the sample size becomes large." (Essentials of Statistics for Business and Economics, Anderson, Sweeney, Williams, 2003.)

To use the Central Limit Theorem in statistics, the population size should be large. The references below are supplied to help define what is large.

> "… whenever we are using a large simple random sample (rule of thumb: n>=30), the central limit theorem enables us to conclude that the sampling distribution of the sample mean can be approximated by a normal distribution." (Essentials of Statistics for Business and Economics, Anderson, Sweeney, Williams, 2003.)
>
> "If samples of size n, when n>=30, are drawn from any population with a mean *u* and a standard deviation σ, the sampling distribution of sample means approximates a normal distribution. The greater the sample size, the better the approximation." (Elementary Statistics - Picturing the World, Larson, Farber, 2003.)
>
> "The sample size is large (generally n>=30)… (Introduction to Statistics and Data Analysis - Second Edition, Peck, Olson, Devore, 2005.)
>
> "… the normal is often used as an approximation to the *t* distribution in a test of a null hypothesis about the mean of a normally distributed population when the population variance is estimated from a relatively large sample. A sample size exceeding 30 is often given as a minimal size in this connection." (Statistical Analysis for Business Decisions, Peters, Summers, 1968.)

Error of Distribution Formula

Beyond the large sample size discussion above, a sample size requirement can be estimated using the bound on the Error of Distribution Formula when the expected result is of a "Pass/Fail" format and will be between 0 and 1.0.

The Error of Distribution Formula is:

$$B = z\sqrt{\frac{\pi(1-\pi)}{n}}$$

Where:

B = bound on the error of distribution (allowable error)

z = standard error

π = expected failure rate

n = sample size required

Solving for n provides:

$$n = \pi(1-\pi)\left(\frac{z}{B}\right)^2$$

Minimum Population Size to use Performance-Based Program

One entity's population of components should be large enough to represent a sizeable sample of a vendor's overall population of manufactured devices. For this reason, the following assumptions are made:

B = 5%

z = 1.96 (This equates to a 95% confidence level)

π = 4%

Using the equation above, n=59.0.

Minimum Sample Size to evaluate Performance-Based Program

The number of components that should be included in a sample size for evaluation of the appropriate testing interval can be smaller because a lower confidence level is acceptable since the sample testing is repeated or updated annually. For this reason, the following assumptions are made:

B = 5%

z = 1.44 (85% confidence level)

π = 4%

Using the equation above, n=31.8.

Recommendation

Based on the above discussion, a sample size should be at least 30 to allow use of the equation mentioned. Using this and the results of the equation, the following numbers are recommended (and required within the standard):

Minimum Population Size to use Performance-Based Maintenance Program = 60

Minimum Sample Size to evaluate Performance-Based Program = 30.

Once the population segment is defined, then maintenance must begin within the intervals as outlined for the device described in the Tables 1-1 through 1-5. Time intervals can be lengthened provided the last year's worth of components tested (or the last 30 units maintained, whichever is more) had fewer than 4%Countable Events. It is notable that 4% is specifically chosen because an entity with a small population (30 units) would have to adjust its time intervals between maintenance if more than one Countable Event was found to have occurred during the last analysis period. A smaller percentage would require that entity to adjust the time interval between maintenance activities if even one unit is found out of tolerance or causes a Misoperation.

The minimum number of units that can be tested in any given year is 5% of the population. Note that this 5% threshold sets a practical limitation on total length of time between intervals at 20 years.

If at any time the number of Countable Events equals or exceeds 4% of the last year's tested components (or the last 30 units maintained, whichever is more), then the time period between manual maintenance activities must be decreased. There is a time limit on reaching the decreased time at which the Countable Events is less than 4%; this must be attained within three years.

9.2 Frequently Asked Questions:

I'm a small entity and cannot aggregate a population of Protection System components to establish a segment required for a Performance-Based Protection System Maintenance Program. How can I utilize that opportunity?

Multiple asset owning entities may aggregate their individually owned populations of individual Protection System components to create a segment that crosses ownership boundaries. All entities participating in a joint program should have a single documented joint management process, with consistent Protection System Maintenance Programs (practices, maintenance intervals and criteria), for which the multiple owners are individually responsible with respect to the requirements of the Standard. The requirements established for Performance-Based Maintenance must be met for the overall aggregated program on an ongoing basis.

The aggregated population should reflect all factors that affect consistent performance across the population, including any relevant environmental factors such as geography, power-plant vs. substation, and weather conditions.

Can an owner go straight to a Performance-Based Maintenance program schedule, if they have previously gathered records?

Yes. An owner can go to a Performance-Based Maintenance program immediately. The owner will need to comply with the requirements of a Performance-Based Maintenance program as listed in the Standard. Gaps in the data collected will not be allowed; therefore, if an owner finds that a gap exists such that they cannot prove that they have collected the data as required for a Performance-Based Maintenance program then they will need to wait until they can prove compliance.

When establishing a Performance-Based Maintenance program, can I use test data from the device manufacturer, or industry survey results, as results to help establish a basis for my Performance-Based intervals?

No, you must use actual in-service test data for the components in the segment.

What types of Misoperations or events are not considered Countable Events in the Performance-Based Protection System Maintenance (PBM) Program?

Countable Events are intended to address conditions that are attributed to hardware failure or calibration failure; that is, conditions that reflect deteriorating performance of the component. These conditions include any condition where the device previously worked properly, then, due to changes within the device, malfunctioned or degraded to the point that re-calibration (to within the entity's tolerance) was required.

For this purpose of tracking hardware issues, human errors resulting in Protection System Misoperations during system installation or maintenance activities are not considered Countable Events. Examples of excluded human errors include relay setting errors, design

errors, wiring errors, inadvertent tripping of devices during testing or installation, and misapplication of Protection System components. Examples of misapplication of Protection System components include wrong CT or PT tap position, protective relay function misapplication, and components not specified correctly for their installation. Obviously, if one is setting up relevant data about hardware failures then human failures should be eliminated from the hardware performance analysis.

One example of human-error is not pertinent data might be in the area of testing "86" lock-out relays (LOR). "Entity A" has two types of LOR's type "X" and type "Y"; they want to move into a performance based maintenance interval. They have 1000 of each type, so the population variables are met. During electrical trip testing of all of their various schemes over the initial six-year interval they find zero type "X" failures, but human error led to tripping a BES Element 100 times; they find 100 type "Y" failures and had an additional 100 human-error caused tripping incidents. In this example the human-error caused Misoperations should not be used to judge the performance of either type of LOR. Analysis of the data might lead "Entity A" to change time intervals. Type "X" LOR can be placed into extended time interval testing because of its low failure rate (zero failures) while Type "Y" would have to be tested more often than every 6 calendar years (100 failures divided by 1000 units exceeds the 4% tolerance level).

Certain types of Protection System component errors that cause Misoperations are not considered Countable Events. Examples of excluded component errors include device malfunctions that are correctable by firmware upgrades and design errors that do not impact protection function.

What are some examples of methods of correcting segment perfomance for Performance-Based Maintenance?

There are a number of methods that may be useful for correcting segment performance for mal-performing segments in a Performance-Based Maintenance system. Some examples are listed below.

- The maximum allowable interval, as established by the Performance-Based Maintenance system, can be decreased. This may, however, be slow to correct the performance of the segment.
- Identifiable sub-groups of components within the established segment, which have been identified to be the mal-performing portion of the segment, can be broken out as an independent segment for target action. Each resulting segment must satisfy the minimum population requirements for a Performance-Based Maintenance program in order to remain within the program.
- Targeted corrective actions can be taken to correct frequently occurring problems. An example would be replacement of capacitors within electromechanical distance relays if bad capacitors were determined to be the cause of the mal-performance.
- components within the mal-performing segment can be replaced with other components (electromechanical distance relays with microprocessor relays, for example) to remove the mal-performing segment.

If I find (and correct) a Unresolved Maintenance Issue as a result of a Misoperation investigation (Re: PRC-004), how does this affect my Performance-Based Maintenance program?

If you perform maintenance on a Protection System component for any reason (including as part of a PRC-004 required Misoperation investigation/corrective action), the actions performed can count as a maintenance activity provided the activities in the relevant Tables have been done, and, if you desire, "reset the clock" on everything you've done. In a Performance-Based Maintenance program, you also need to record the Unresolved Maintenance Issue as a Countable Event within the relevant component group segment and use it in the analysis to determine your correct Performance-Based Maintenance interval for that component group. Note that "resetting the clock" should not be construed as interfering with an entity's routine testing schedule because the "clock-reset" would actually make for a decreased time interval by the time the next routine test schedule comes around.

For example a relay scheme, consisting of four relays, is tested on 1-1-11 and the PSMP has a time interval of 3 calendar years with an allowable extension of 1 calendar year. The relay would be due again for routine testing before the end of the year 2015. This mythical relay scheme has a Misoperation on 6-1-12 that points to one of the four relays as bad. Investigation proves a bad relay and a new one is tested and installed in place of the original. This replacement relay actually could be retested before the end of the year 2016 (clock-reset) and not be out of compliance. This requires tracking maintenance by individual relays and is allowed. However, many companies schedule maintenance in other ways like by substation or by circuit breaker or by relay scheme. By these methods of tracking maintenance that "replaced relay" will be retested before the end of the year 2015. This is also acceptable. In no case was a particular relay tested beyond the PSMP of four years max, nor was the 6 year max of the Standard exceeded. The entity can reset the clock if they desire or the entity can continue with original schedules and, in effect, test even more frequently.

Why are batteries excluded from PBM? What about exclusion of batteries from condition based maintenance?

Batteries are the only element of a Protection System that is a perishable item with a shelf life. As a perishable item batteries require not only a constant float charge to maintain their freshness (charge), but periodic inspection to determine if there are problems associated with their aging process and testing to see if they are maintaining a charge or can still deliver their rated output as required.

Besides being perishable, a second unique feature of a battery that is unlike any other Protection System element is that a battery uses chemicals, metal alloys, plastics, welds, and bonds that must interact with each other to produce the constant dc source required for Protection Systems, undisturbed by ac system Disturbances.

No type of battery manufactured today for Protection System application is free from problems that can only be detected over time by inspection and test. These problems can arise from variances in the manufacturing process, chemicals and alloys used in the construction of the individual cells, quality of welds and bonds to connect the components, the plastics used to make batteries and the cell forming process for the individual battery cells.

Other problems that require periodic inspection and testing can result from transportation from the factory to the job site, length of time before a charge is put on the battery, the method of installation, the voltage level and duration of equalize charges, the float voltage level used, and the environment that the battery is installed in.

All of the above mentioned factors and several more not discussed here are beyond the control of the Functional Entities that want to use a Performance-Based Protection System Maintenance (PBM) program. These inherent variances in the aging process of a battery cell make establishment of a designated segment based on manufacturer and type of battery impossible.

The whole point of PBM is that if all variables are isolated then common aging and performance criteria would be the same. However, there are too many variables in the electrochemical process to completely isolate all of the performance-changing criteria.

Similarly, Functional Entities that want to establish a condition-based maintenance program using the highest levels of monitoring, resulting in the least amount of hands-on maintenance activity, cannot completely eliminate some periodic maintenance of the battery used in a station dc supply. Inspection of the battery is required on a Maximum Maintenance Interval listed in the tables due to the aging processes of station batteries. However, higher degrees of monitoring of a battery can eliminate the requirement for some periodic testing and some inspections (see Table 1-4).

Please provide an example of the calculations involved in extending maintenance time intervals using PBM.

Entity has 1000 GE-HEA lock-out relays; this is greater than the minimum sample requirement of 60. They start out testing all of the relays within the prescribed Table requirements (6 year max) by testing the relays every 5 years. The entity's plan is to test 200 units per year; this is greater than the minimum sample size requirement of 30. For the sake of example only the following will show 6 failures per year, reality may well have different numbers of failures every year. PBM requires annual assessment of failures found per units tested. After the first year of tests the entity finds 6 failures in the 200 units tested. 6/200= 3% failure rate. This entity is now allowed to extend the maintenance interval if they choose. The entity chooses to extend the maintenance interval of this population segment out to 10 years. This represents a rate of 100 units tested per year; entity selects 100 units to be tested in the following year. After that year of testing these 100 units the entity again finds 6 failed units. 6/100= 6% failures. This entity has now exceeded the acceptable failure rate for these devices and must accelerate testing of all of the units at a higher rate such that the failure rate is found to be less than 4% per year; the entity has three years to get this failure rate down to 4% or less (per year). In response to the 6% failure rate, the entity decreases the testing interval to 8 years. This means that they will now test 125 units per year (1000/8). The entity has just two years left to get the test rate corrected.

After a year, they again find six failures out of the 125 units tested. 6/125= 5% failures. In response to the 5% failure rate, the entity decreases the testing interval to seven years. This means that they will now test 143 units per year (1000/7). The entity has just one year left to get the test rate corrected. After a year, they again find six failures out of the 143 units tested. 6/143= 4.2% failures.

(Note that the entity has tried five years and they were under the 4% limit and they tried seven years and they were over the 4% limit. They must be back at 4% failures or less in the next year so they might simply elect to go back to five years.)

Instead, in response to the 5% failure rate, the entity decreases the testing interval to six years. This means that they will now test 167 units per year (1000/6). After a year, they again find six

failures out of the 167 units tested. 6/167= 3.6% failures. Entity found that they could maintain the failure rate at no more than 4% failures by maintaining the testing interval at six years or less. Entity chose six-year interval and effectively extended their TBM (five years) program by 20%.

A note of practicality is that an entity will probably be in better shape to lengthen the intervals between tests if the failure rate is less than 2%. But the requirements allow for annual adjustments, if the entity desires. As a matter of maintenance management, an ever-changing test rate (units tested/year) may be un-workable.

Note that the "5% of components" requirement effectively sets a practical limit of 20 year maximum PBM interval. Also of note is the "3 years" requirement; an entity might arbitrarily extend time intervals from six years to 20 years. In the event that an entity finds a failure rate greater than 4%, then the test rate must be accelerated such that within three years the failure rate must be brought back down to 4% or less.

Here is a table that demonstrates the values discussed:

Year #	Total Population (P)	Test Interval (I)	Units to be Tested (U= P/I)	# of Failures Found (F)	Failure Rate (=F/U)	Decision to Change Interval Yes or No	Interval Chosen
1	1000	5 yrs	200	6	3%	Yes	10 yrs
2	1000	10 yrs	100	6	6%	Yes	8 yrs
3	1000	8 yrs	125	6	5%	Yes	7 yrs
4	1000	7 yrs	143	6	4.2%	Yes	6 yrs
5	1000	6 yrs	167	6	3.6%	No	6 yrs

Please provide an example of the calculations involved in extending maintenance time intervals using PBM for control circuitry.

Note that the following example captures "Control Circuitry" as all of the trip paths associated with a particular trip coil of a circuit breaker. An entity is not restricted to this method of counting control circuits. Perhaps another method an entity would prefer would be to simply track every individual (parallel) trip path. Or perhaps another method would be to track all of the trip outputs from a specific (set) of relays protecting a specific element. Under the included definition of "component":

The designation of what constitutes a control circuit component is very dependent upon how an entity performs and tracks the testing of the control circuitry. Some entities test their control circuits on a breaker basis whereas others test their circuitry on a local zone of protection basis. Thus, entities are allowed the latitude to designate their own definitions of control circuit components. Another example of where the entity has some discretion on determining what constitutes a single component is the voltage and current sensing devices, where the entity may choose either to designate a full three-phase set of such devices or a single device as a single component.

And in Attachment A (PBM) the definition of Segment:

Segment – *Protection Systems or components of a consistent design standard, or a particular model or type from a single manufacturer that typically share other common elements. Consistent performance is expected across the entire population of a segment. A segment must contain at least sixty (60) individual components.*

Example:

Entity has 1,000 circuit breakers, all of which have two trip coils, for a total of 2,000 trip coils; if all circuitry was designed and built with a consistent (internal entity) standard, then this is greater than the minimum sample requirement of 60.

For the sake of further example, the following facts are given:

Half of all relay panels (500) were built 40 years ago by an outside contractor, consisted of asbestos wrapped 600V-insulation panel wiring, and the cables exiting the control house are THHN pulled in conduit direct to exactly half of all of the various circuit breakers. All of the relay panels and cable pulls were built with consistent standards and consistent performance standard expectations within the segment (which is greater than 60). Each relay panel has redundant microprocessor (MPC) relays (retrofitted); each MPC relay supplies an individual trip output to each of the two trip coils of the assigned circuit breaker.

Approximately 35 years ago, the entity developed their own internal construction crew and now builds all of their own relay panels from parts supplied from vendors that meet the entity's specifications, including SIS 600V insulation wiring and copper-sheathed cabling within the direct conduits to circuit breakers. The construction crew uses consistent standards in the construction. This newer segment of their control circuitry population is different than the original segment, consistent (standards, construction and performance expectations) within the new segment and constitutes the remainder of the entity's population (another 500 panels and the cabling to the remaining 500 circuit breakers). Each relay panel has redundant microprocessor (MPC) relays; each MPC relay supplies an individual trip output to each of the two trip coils of the assigned circuit breaker. Every trip path in this newer segment has a device

that monitors the voltage directly across the trip contacts of the MPC relays and alarms via RTU and SCADA to the operations control room. This monitoring device, when not in alarm, demonstrates continuity all the way through the trip coil, cabling and wiring back to the trip contacts of the MPC relay.

The entity is tracking 2,000 trip coils (each consisting of multiple trip paths) in each of these two segments. But half of all of the trip paths are monitored; therefore, the trip paths are continuously tested and the circuit will alarm when there is a failure. These alarms have to be verified every 12 years for correct operation.

The entity now has 1,000 trip coils (and associated trip paths) remaining that they have elected to count as control circuits. The entity has instituted a process that requires the verification of every trip path to each trip coil (one unit), including the electrical activation of the trip coil. (The entity notes that the trip coils will have to be tripped electrically more often than the trip path verification, and is taking care of this activity through other documentation of Real-time Fault operations.)

They start out testing all of the trip coil circuits within the prescribed Table requirements (12-year max) by testing the trip circuits every 10 years. The entity's plan is to test 100 units per year; this is greater than the minimum sample size requirement of 30. For the sake of example only, the following will show three failures per year; reality may well have different numbers of failures every year. PBM requires annual assessment of failures found per units tested. After the first year of tests, the entity finds three failures in the 100 units tested. 3/100= 3% failure rate.

This entity is now allowed to extend the maintenance interval, if they choose. The entity chooses to extend the maintenance interval of this population segment out to 20 years. This represents a rate of 50 units tested per year; entity selects 50 units to be tested in the following year. After that year of testing these 50 units, the entity again finds three failed units. 3/50= 6% failures.

This entity has now exceeded the acceptable failure rate for these devices and must accelerate testing of all of the units at a higher rate, such that the failure rate is found to be less than 4% per year; the entity has three years to get this failure rate down to 4% or less (per year).

In response to the 6% failure rate, the entity decreases the testing interval to 16 years. This means that they will now test 63 units per year (1000/16). The entity has just two years left to get the test rate corrected. After a year, they again find three failures out of the 63 units tested. 3/63= 4.76% failures.

In response to the >4% failure rate, the entity decreases the testing interval to 14 years. This means that they will now test 72 units per year (1000/14). The entity has just one year left to get the test rate corrected. After a year, they again find three failures out of the 72 units tested. 3/72= 4.2% failures.

(Note that the entity has tried 10 years, and they were under the 4% limit; and they tried 14 years, and they were over the 4% limit. They must be back at 4% failures or less in the next year, so they might simply elect to go back to 10 years.)

Instead, in response to the 4.2% failure rate, the entity decreases the testing interval to 12 years. This means that they will now test 84 units per year (1000/12). After a year, they again find three failures out of the 84 units tested. 3/84= 3.6% failures.

Entity found that they could maintain the failure rate at no more than 4% failures by maintaining the testing interval at 12 years or less. Entity chose 12-year interval, and effectively extended their TBM (10 years) program by 20%.

A note of practicality is that an entity will probably be in better shape to lengthen the intervals between tests if the failure rate is less than 2%. But the requirements allow for annual adjustments if the entity desires. As a matter of maintenance management, an ever-changing test rate (units tested / year) may be un-workable.

Note that the "5% of components" requirement effectively sets a practical limit of 20-year maximum PBM interval. Also of note is the "3 years" requirement; an entity might arbitrarily extend time intervals from six years to 20 years. In the event that an entity finds a failure rate greater than 4%, then the test rate must be accelerated such that within three years the failure rate must be brought back down to 4% or less.

Here is a table that demonstrates the values discussed:

Year #	Total Population (P)	Test Interval (I)	Units to be Tested (U= P/I)	# of Failures Found (F)	Failure Rate (=F/U)	Decision to Change Interval Yes or No	Interval Chosen
1	1000	10 yrs	100	3	3%	Yes	20 yrs
2	1000	20 yrs	50	3	6%	Yes	16yrs
3	1000	16 yrs	63	3	4.8%	Yes	14 yrs
4	1000	14 yrs	72	3	4.2%	Yes	12 yrs
5	1000	12 yrs	84	3	3.6%	No	12 yrs

Please provide an example of the calculations involved in extending maintenance time intervals using PBM for voltage and current sensing devices.

Note that the following example captures "voltage and current inputs to the protective relays" as all of the various current transformer and potential transformer signals associated with a particular set of relays used for protection of a specific Element. This entity calls this set of protective relays a "Relay Scheme." Thus, this entity chooses to count PT and CT signals as a group instead of individually tracking maintenance activities to specific bushing CT's or specific PT's. An entity is not restricted to this method of counting voltage and current devices, signals and paths. Perhaps another method an entity would prefer would be to simply track every individual PT and CT. Note that a generation maintenance group may well select the latter because they may elect to perform routine off-line tests during generator outages, whereas a transmission maintenance group might create a process that utilizes Real-time system values measured at the relays. Under the included definition of "component":

The designation of what constitutes a control circuit component is very dependent upon how an entity performs and tracks the testing of the control circuitry. Some entities test their control circuits on a breaker basis whereas others test their circuitry on a local zone of protection basis. Thus, entities are allowed the latitude to designate their own definitions of control circuit components. Another example of where the entity has some discretion on determining what constitutes a single component is the voltage and current sensing devices, where the entity may choose either to designate a full three-phase set of such devices or a single device as a single component.

And in Attachment A (PBM) the definition of Segment:

Segment – *Protection Systems or components of a consistent design standard, or a particular model or type from a single manufacturer that typically share other common elements. Consistent performance is expected across the entire population of a segment. A segment must contain at least sixty (60) individual components.*

Example:

Entity has 2000 "Relay Schemes," all of which have three current signals supplied from bushing CTs, and three voltage signals supplied from substation bus PT's. All cabling and circuitry was designed and built with a consistent (internal entity) standard, and this population is greater than the minimum sample requirement of 60.

For the sake of further example the following facts are given:

Half of all relay schemes (1,000) are supplied with current signals from ANSI STD C800 bushing CTs and voltage signals from PTs built by ACME Electric MFR CO. All of the relay panels and cable pulls were built with consistent standards, and consistent performance standard expectations exist for the consistent wiring, cabling and instrument transformers within the segment (which is greater than 60).

The other half of the entity's relay schemes have MPC relays with additional monitoring built-in that compare DNP values of voltages and currents (or Watts and VARs), as interpreted by the MPC relays and alarm for an entity-accepted tolerance level of accuracy. This newer segment of their "Voltage and Current Sensing" population is different than the original segment, consistent (standards, construction and performance expectations) within the new segment and constitutes the remainder of the entity's population.

The entity is tracking many thousands of voltage and current signals within 2,000 relay schemes (each consisting of multiple voltage and current signals) in each of these two segments. But half of all of the relay schemes voltage and current signals are monitored; therefore, the voltage and current signals are continuously tested and the circuit will alarm when there is a failure; these alarms have to be verified every 12 years for correct operation.

The entity now has 1,000 relay schemes worth of voltage and current signals remaining that they have elected to count within their relay schemes designation. The entity has instituted a process that requires the verification of these voltage and current signals within each relay scheme (one unit).

(Please note - a problem discovered with a current or voltage signal found at the relay could be caused by anything from the relay, all the way to the signal source itself. Having many sources of problems can easily increase failure rates beyond the rate of failures of just one item (for example just PTs). It is the intent of the SDT to minimize failure rates of all of the equipment to an acceptable level; thus, any failure of any item that gets the signal from source to relay is counted. It is for this reason that the SDT chose to set the boundary at the ability of the signal to be delivered all the way to the relay.

The entity will start out measuring all of the relay scheme voltage and currents at the individual relays within the prescribed Table requirements (12 year max) by measuring the voltage and current values every 10 years. The entity's plan is to test 100 units per year; this is greater than the minimum sample size requirement of 30. For the sake of example only, the following will show three failures per year; reality may well have different numbers of failures every year. PBM requires annual assessment of failures found per units tested. After the first year of tests, the entity finds three failures in the 100 units tested. 3/100= 3% failure rate.

This entity is now allowed to extend the maintenance interval, if they choose. The entity chooses to extend the maintenance interval of this population segment out to 20 years. This represents a rate of 50 units tested per year; entity selects 50 units to be tested in the following year. After that year of testing these 50 units, the entity again finds three failed units. 3/50= 6% failures.

This entity has now exceeded the acceptable failure rate for these devices and must accelerate testing of all of the units at a higher rate, such that the failure rate is found to be less than 4% per year; the entity has three years to get this failure rate down to 4% or less (per year).

In response to the 6% failure rate, the entity decreases the testing interval to 16 years. This means that they will now test 63 units per year (1000/16). The entity has just two years left to get the test rate corrected. After a year, they again find three failures out of the 63 units tested. 3/63= 4.76% failures.

In response to the >4%failure rate, the entity decreases the testing interval to 14 years. This means that they will now test 72 units per year (1000/14). The entity has just one year left to get the test rate corrected. After a year, they again find three failures out of the 72 units tested. 3/72= 4.2% failures.

(Note that the entity has tried 10 years, and they were under the 4% limit; and they tried 14 years, and they were over the 4% limit. They must be back at 4% failures or less in the next year, so they might simply elect to go back to 10 years.)

Instead, in response to the 4.2% failure rate, the entity decreases the testing interval to 12 years. This means that they will now test 84 units per year (1,000/12). After a year, they again find three failures out of the 84 units tested. 3/84= 3.6% failures.

Entity found that they could maintain the failure rate at no more than 4% failures by maintaining the testing interval at 12 years or less. Entity chose 12-year interval and effectively extended their TBM (10 years) program by 20%.

A note of practicality is that an entity will probably be in better shape to lengthen the intervals between tests if the failure rate is less than 2%. But the requirements allow for annual adjustments, if the entity desires. As a matter of maintenance management, an ever-changing test rate (units tested/year) may be un-workable.

Note that the "5% of components" requirement effectively sets a practical limit of 20-year maximum PBM interval. Also of note is the "3 years" requirement; an entity might arbitrarily extend time intervals from six years to 20 years. In the event that an entity finds a failure rate greater than 4%, then the test rate must be accelerated such that within three years the failure rate must be brought back down to 4% or less.

Here is a table that demonstrates the values discussed:

Year #	Total Population (P)	Test Interval (I)	Units to be Tested (U= P/I)	# of Failures Found (F)	Failure Rate (=F/U)	Decision to Change Interval Yes or No	Interval Chose
1	1000	10 yrs	100	3	3%	Yes	20 yrs
2	1000	20 yrs	50	3	6%	Yes	16yrs
3	1000	16 yrs	63	3	4.8%	Yes	14 yrs
4	1000	14 yrs	72	3	4.2%	Yes	12 yrs
5	1000	12 yrs	84	3	3.6%	No	12 yrs

10. Overlapping the Verification of Sections of the Protection System

Tables 1-1 through 1-5 require that every Protection System component be periodically verified. One approach, but not the only method, is to test the entire protection scheme as a unit, from the secondary windings of voltage and current sources to breaker tripping. For practical ongoing verification, sections of the Protection System may be tested or monitored individually. The boundaries of the verified sections must overlap to ensure that there are no gaps in the verification. See Appendix A of this Supplementary Reference for additional discussion on this topic.

All of the methodologies expressed within this report may be combined by an entity, as appropriate, to establish and operate a maintenance program. For example, a Protection System may be divided into multiple overlapping sections with a different maintenance methodology for each section:

- Time-based maintenance with appropriate maximum verification intervals for categories of equipment, as given in the Tables 1-1 through 1-5;
- Monitoring as described in Tables 1-1 through 1-5;
- A Performance-Based Maintenance program as described in Section 9 above, or Attachment A of the standard;
- Opportunistic verification using analysis of Fault records, as described in Section 11

10.1 Frequently Asked Questions:

My system has alarms that are gathered once daily through an auto-polling system; this is not really a conventional SCADA system but does it meet the Table 1 requirements for inclusion as a monitored system?

Yes, provided the auto-polling that gathers the alarms reports those alarms to a location where the action can be initiated to correct the Unresolved Maintenance Issue. This location does not have to be the location of the engineer or the technician that will eventually repair the problem, but rather a location where the action can be initiated.

11. Monitoring by Analysis of Fault Records

Many users of microprocessor relays retrieve Fault event records and oscillographic records by data communications after a Fault. They analyze the data closely if there has been an apparent Misoperation, as NERC standards require. Some advanced users have commissioned automatic Fault record processing systems that gather and archive the data. They search for evidence of component failures or setting problems hidden behind an operation whose overall outcome seems to be correct. The relay data may be augmented with independently captured Digital Fault Recorder (DFR) data retrieved for the same event.

Fault data analysis comprises a legitimate CBM program that is capable of reducing the need for a manual time-interval based check on Protection Systems whose operations are analyzed. Even electromechanical Protection Systems instrumented with DFR channels may achieve some CBM benefit. The completeness of the verification then depends on the number and variety of Faults in the vicinity of the relay that produce relay response records and the specific data captured.

A typical Fault record will verify particular parts of certain Protection Systems in the vicinity of the Fault. For a given Protection System installation, it may or may not be possible to gather within a reasonable amount of time an ensemble of internal and external Fault records that completely verify the Protection System.

For example, Fault records may verify that the particular relays that tripped are able to trip via the control circuit path that was specifically used to clear that Fault. A relay or DFR record may indicate correct operation of the protection communications channel. Furthermore, other nearby Protection Systems may verify that they restrain from tripping for a Fault just outside their respective zones of protection. The ensemble of internal Fault and nearby external Fault event data can verify major portions of the Protection System, and reset the time clock for the Table 1 testing intervals for the verified components only.

What can be shown from the records of one operation is very specific and limited. In a panel with multiple relays, only the specific relay(s) whose operation can be observed without ambiguity should be used. Be careful about using Fault response data to verify that settings or calibration are correct. Unless records have been captured for multiple Faults close to either side of a setting boundary, setting or calibration could still be incorrect.

PMU data, much like DME data, can be utilized to prove various components of the Protection System. Obviously, care must be taken to attribute proof only to the parts of a Protection System that can actually be proven using the PMU or DME data.

If Fault record data is used to show that portions or all of a Protection System have been verified to meet Table 1 requirements, the owner must retain the Fault records used, and the maintenance-related conclusions drawn from this data and used to defer Table 1 tests, for at least the retention time interval given in Section 8.2.

11.1 Frequently Asked Questions:

I use my protective relays for Fault and Disturbance recording, collecting oscillographic records and event records via communications for Fault analysis to meet NERC and DME requirements. What are the maintenance requirements for the relays?

For relays used only as Disturbance Monitoring Equipment, NERC Standard PRC-018-1 R3 & R6 states the maintenance requirements and is being addressed by a standards activity that is revising PRC-002-1 and PRC-018-1. For protective relays "that are designed to provide protection for the BES," this standard applies, even if they also perform DME functions.

12. Importance of Relay Settings in Maintenance Programs

In manual testing programs, many utilities depend on pickup value or zone boundary tests to show that the relays have correct settings and calibration. Microprocessor relays, by contrast, provide the means for continuously monitoring measurement accuracy. Furthermore, the relay digitizes inputs from one set of signals to perform all measurement functions in a single self-monitoring microprocessor system. These relays do not require testing or calibration of each setting.

However, incorrect settings may be a bigger risk with microprocessor relays than with older relays. Some microprocessor relays have hundreds or thousands of settings, many of which are critical to Protection System performance.

Monitoring does not check measuring element settings. Analysis of Fault records may or may not reveal setting problems. To minimize risk of setting errors after commissioning, the user should enforce strict settings data base management, with reconfirmation (manual or automatic) that the installed settings are correct whenever maintenance activity might have changed them; for background and guidance, see [5] in References.

Table 1 requires that settings must be verified to be as specified. The reason for this requirement is simple: With legacy relays (non-microprocessor protective relays), it is necessary to know the value of the intended setting in order to test, adjust and calibrate the relay. Proving that the relay works per specified setting was the de facto procedure. However, with the advanced microprocessor relays, it is possible to change relay settings for the purpose of verifying specific functions and then neglect to return the settings to the specified values. While there is no specific requirement to maintain a settings management process, there remains a need to verify that the settings left in the relay are the intended, specified settings. This need may manifest itself after any of the following:

- One or more settings are changed for any reason.
- A relay fails and is repaired or replaced with another unit.
- A relay is upgraded with a new firmware version.

12.1 Frequently Asked Questions:

How do I approach testing when I have to upgrade firmware of a microprocessor relay?

The entity should ensure that the relay continues to function properly after implementation of firmware changes. Some entities may have a R&D department that might routinely run acceptance tests on devices with firmware upgrades before allowing the upgrade to be installed. Other entities may rely upon the vigorous testing of the firmware OEM. An entity has the latitude to install devices and/or programming that they believe will perform to their satisfaction. If an entity should choose to perform the maintenance activities specified in the Tables following a firmware upgrade, then they may, if they choose, reset the time clock on that set of maintenance activities so that they would not have to repeat the maintenance on its

regularly scheduled cycle. (However, for simplicity in maintenance schedules, some entities may choose to not reset this time clock; it is merely a suggested option.)

If I upgrade my old relays, then do I have to maintain my previous equipment maintenance documentation?

If an equipment item is repaired or replaced, then the entity can restart the maintenance-activity-time-interval-clock, if desired; however, the replacement of equipment does not remove any documentation requirements. The requirements in the standard are intended to ensure that an entity has a maintenance plan, and that the entity adheres to minimum activities and maximum time intervals. The documentation requirements are intended to help an entity demonstrate compliance. For example, saving the dates and records of the last two maintenance activities is intended to demonstrate compliance with the interval. Therefore, if you upgrade or replace equipment, then you still must maintain the documentation for the previous equipment, thus demonstrating compliance with the time interval requirement prior to the replacement action.

We have a number of installations where we have changed our Protection System components. Some of the changes were upgrades, but others were simply system rating changes that merely required taking relays "out-of-service". What are our responsibilities when it comes to "out-of-service" devices?

Assuming that your system up-rates, upgrades and overall changes meet any and all other requirements and standards, then the requirements of PRC-005-2 are simple – if the Protection System component performs a Protection System function, then it must be maintained. If the component no longer performs Protection System functions, then it does not require maintenance activities under the Tables of PRC-005-2. While many entities might physically remove a component that is no longer needed, there is no requirement in PRC-005-2 to remove such component(s). Obviously, prudence would dictate that an "out-of-service" device is truly made inactive. There are no record requirements listed in PRC-005-2 for Protection System components not used.

While performing relay testing of a protective device on our Bulk Electric System, it was discovered that the protective device being tested was either broken or out of calibration. Does this satisfy the relay testing requirement, even though the protective device tested bad, and may be unable to be placed back into service?

Yes, PRC-005-2 requires entities to perform relay testing on protective devices on a given maintenance cycle interval. By performing this testing, the entity has satisfied PRC-005-2 requirement, although the protective device may be unable to be returned to service under normal calibration adjustments. R5 states:

"R5. Each Transmission Owner, Generator Owner, and Distribution Provider shall demonstrate efforts to correct any identified Unresolved Maintenance Issues."

Also, when a failure occurs in a Protection System, power system security may be comprised, and notification of the failure must be conducted in accordance with relevant NERC standards.

If I show the protective device out of service while it is being repaired, then can I add it back as a new protective device when it returns? If not, my relay testing history would show that I was out of compliance for the last maintenance cycle.

The maintenance and testing requirements (R5) state "…shall demonstrate efforts to correct any identified Unresolved Maintenance Issues..." The type of corrective activity is not stated; however, it could include repairs or replacements.

Your documentation requirements will increase, of course, to demonstrate that your device tested bad and had corrective actions initiated. Your regional entity might ask about the status of your corrective actions.

13. Self-Monitoring Capabilities and Limitations

Microprocessor relay proponents have cited the self-monitoring capabilities of these products for nearly 20 years. Theoretically, any element that is monitored does not need a periodic manual test. A problem today is that the community of manufacturers and users has not created clear documentation of exactly what is and is not monitored. Some unmonitored but critical elements are buried in installed systems that are described as self-monitoring.

To utilize the extended time intervals allowed by monitoring, the user must document that the monitoring attributes of the device match the minimum requirements listed in the Table 1.

Until users are able to document how all parts of a system which are required for the protective functions are monitored or verified (with help from manufacturers), they must continue with the unmonitored intervals established in Table 1 and Table 3.

Going forward, manufacturers and users can develop mappings of the monitoring within relays, and monitoring coverage by the relay of user circuits connected to the relay terminals.

To enable the use of the most extensive monitoring (and never again have a hands-on maintenance requirement), the manufacturers of the microprocessor-based self-monitoring components in the Protection System should publish for the user a document or map that shows:

- How all internal elements of the product are monitored for any failure that could impact Protection System performance.
- Which connected circuits are monitored by checks implemented within the product; how to connect and set the product to assure monitoring of these connected circuits; and what circuits or potential problems are not monitored.

This manufacturer's information can be used by the registered entity to document compliance of the monitoring attributes requirements by:

- Presenting or referencing the product manufacturer's documents.
- Explaining in a system design document the mapping of how every component and circuit that is critical to protection is monitored by the microprocessor product(s) or by other design features.
- Extending the monitoring to include the alarm transmission Facilities through which failures are reported within a given time frame to allocate where action can be taken to initiate resolution of the alarm attributed to an Unresolved Maintenance Issue, so that failures of monitoring or alarming systems also lead to alarms and action.
- Documenting the plans for verification of any unmonitored components according to the requirements of Table 1 and Table 3.

13.1 Frequently Asked Questions:

I can't figure out how to demonstrate compliance with the requirements for the highest level of monitoring of Protection Systems. Why does this Maintenance Standard describe a maintenance program approach I cannot achieve?

Demonstrating compliance with the requirements for the highest level of monitoring any particular component of Protection Systems is likely to be very involved, and may include detailed manufacturer documentation of complete internal monitoring within a device, comprehensive design drawing reviews, and other detailed documentation. This standard does not presume to specify what documentation must be developed; only that it must be documented.

There may actually be some equipment available that is capable of meeting these highest levels of monitoring criteria, in which case it may be maintained according to the highest level of monitoring shown on the Tables. However, even if there is no equipment available today that can meet this level of monitoring, the standard establishes the necessary requirements for when such equipment becomes available.

By creating a roadmap for development, this provision makes the standard technology-neutral. The Standard Drafting Team wants to avoid the need to revise the standard in a few years to accommodate technology advances that may be coming to the industry.

14. Notification of Protection System Failures

When a failure occurs in a Protection System, power system security may be compromised, and notification of the failure must be conducted in accordance with relevant NERC standard(s). Knowledge of the failure may impact the system operator's decisions on acceptable Loading conditions.

This formal reporting of the failure and repair status to the system operator by the Protection System owner also encourages the system owner to execute repairs as rapidly as possible. In some cases, a microprocessor relay or carrier set can be replaced in hours; wiring termination failures may be repaired in a similar time frame. On the other hand, a component in an electromechanical or early-generation electronic relay may be difficult to find and may hold up repair for weeks. In some situations, the owner may have to resort to a temporary protection panel, or complete panel replacement.

15. Maintenance Activities

Some specific maintenance activities are a requirement to ensure reliability. An example would be that a BES entity could be prudent in its protective relay maintenance, but if its battery maintenance program is lacking, then reliability could still suffer. The NERC glossary outlines a Protection System as containing specific components. PRC-005-2 requires specific maintenance activities be accomplished within a specific time interval. As noted previously, higher technology equipment can contain integral monitoring capability that actually performs maintenance verification activities routinely and often; therefore, *manual intervention* to perform certain activities on these type components may not be needed.

15.1 Protective Relays (Table 1-1)

These relays are defined as the devices that receive the input signal from the current and voltage sensing devices and are used to isolate a Faulted Element of the BES. Devices that sense thermal, vibration, seismic, pressure, gas, or any other non-electrical inputs are excluded.

Non-microprocessor based equipment is treated differently than microprocessor-based equipment in the following ways; the relays should meet the asset owners' tolerances:

- Non-microprocessor devices must be tested with voltage and/or current applied to the device.
- Microprocessor devices may be tested through the integral testing of the device.
    - There is no specific protective relay commissioning test or relay routine test mandated.
    - There is no specific documentation mandated.

15.1.1 Frequently Asked Questions:

What calibration tolerance should be applied on electromechanical relays?

Each entity establishes their own acceptable tolerances when applying protective relaying on their system. For some Protection System components, adjustment is required to bring measurement accuracy within the parameters established by the asset owner based on the specific application of the component. A calibration failure is the result if testing finds the specified parameters to be out of tolerance.

15.2 Voltage & Current Sensing Devices (Table 1-3)

These are the current and voltage sensing devices, usually known as instrument transformers. There is presently a technology available (fiber-optic Hall-effect) that does not utilize conventional transformer technology; these devices and other technologies that produce quantities that represent the primary values of voltage and current are considered to be a type of voltage and current sensing devices included in this standard.

The intent of the maintenance activity is to verify the input to the protective relay from the device that produces the current or voltage signal sample.

There is no specific test mandated for these components. The important thing about these signals is to know that the expected output from these components actually reaches the

protective relay. Therefore, the proof of the proper operation of these components also demonstrates the integrity of the wiring (or other medium used to convey the signal) from the current and voltage sensing device, all the way to the protective relay. The following observations apply:

- There is no specific ratio test, routine test or commissioning test mandated.
- There is no specific documentation mandated.
- It is required that the signal be present at the relay.
- This expectation can be arrived at from any of a number of means; including, but not limited to, the following: By calculation, by comparison to other circuits, by commissioning tests, by thorough inspection, or by any means needed to verify the circuit meets the asset owner's Protection System maintenance program.
- An example of testing might be a saturation test of a CT with the test values applied at the relay panel; this, therefore, tests the CT, as well as the wiring from the relay all the back to the CT.
- Another possible test is to measure the signal from the voltage and/or current sensing devices, during Load conditions, at the input to the relay.
- Another example of testing the various voltage and/or current sensing devices is to query the microprocessor relay for the Real-time Loading; this can then be compared to other devices to verify the quantities applied to this relay. Since the input devices have supplied the proper values to the protective relay, then the verification activity has been satisfied. Thus, event reports (and oscillographs) can be used to verify that the voltage and current sensing devices are performing satisfactorily.
- Still another method is to measure total watts and vars around the entire bus; this should add up to zero watts and zero vars, thus proving the voltage and/or current sensing devices system throughout the bus.
- Another method for proving the voltage and/or current-sensing devices is to complete commissioning tests on all of the transformers, cabling, fuses and wiring.
- Any other method that verifies the input to the protective relay from the device that produces the current or voltage signal sample.

15.2.1 Frequently Asked Questions:

What is meant by "…verify the current and voltage circuit inputs from the voltage and current sensing devices to the protective relays …" Do we need to perform ratio, polarity and saturation tests every few years?

No. You must verify that the protective relay is receiving the expected values from the voltage and current-sensing devices (typically voltage and current transformers). This can be as difficult as is proposed by the question (with additional testing on the cabling and substation wiring to ensure that the values arrive at the relays); or simplicity can be achieved by other verification methods. While some examples follow, these are not intended to represent an all-inclusive list; technology advances and ingenuity should not be excluded from making comparisons and verifications:

- Compare the secondary values, at the relay, to a metering circuit, fed by different current transformers, monitoring the same line as the questioned relay circuit.
- Compare the individual phase secondary values at the relay panel (with additional testing on the panel wiring to ensure that the values arrive at those relays) with the other phases, and verify that residual currents are within expected bounds.
- Observe all three phase currents and the residual current at the relay panel with an oscilloscope, observing comparable magnitudes and proper phase relationship, with additional testing on the panel wiring to ensure that the values arrive at the relays.
- Compare the values, as determined by the questioned relay (such as, but not limited to, a query to the microprocessor relay) to another protective relay monitoring the same line, with currents supplied by different CTs.
- Compare the secondary values, at the relay with values measured by test instruments (such as, but not limited to multi-meters, voltmeter, clamp-on ammeters, etc.) and verified by calculations and known ratios to be the values expected. For example, a single PT on a 100KV bus will have a specific secondary value that, when multiplied by the PT ratio, arrives at the expected bus value of 100KV.
- Query SCADA for the power flows at the far end of the line protected by the questioned relay, compare those SCADA values to the values as determined by the questioned relay.
- Totalize the Watts and VARs on the bus and compare the totals to the values as seen by the questioned relay.

The point of the verification procedure is to ensure that all of the individual components are functioning properly; and that an ongoing proactive procedure is in place to re-check the various components of the protective relay measuring Systems.

Is wiring insulation or hi-pot testing required by this Maintenance Standard?

No, wiring insulation and equipment hi-pot testing are not specifically required by the Maintenance Standard. However, if the method of verifying CT and PT inputs to the relay involves some other method than actual observation of current and voltage transformer secondary inputs to the relay, it might be necessary to perform some sort of cable integrity test to verify that the instrument transformer secondary signals are actually making it to the relay

and not being shunted off to ground. For instance, you could use CT excitation tests and PT turns ratio tests and compare to baseline values to verify that the instrument transformer outputs are acceptable. However, to conclude that these acceptable transformer instrument output signals are actually making it to the relay inputs, it also would be necessary to verify the insulation of the wiring between the instrument transformer and the relay.

My plant generator and transformer relays are electromechanical and do not have metering functions, as do microprocessor- based relays. In order for me to compare the instrument transformer inputs to these relays to the secondary values of other metered instrument transformers monitoring the same primary voltage and current signals, it would be necessary to temporarily connect test equipment, like voltmeters and clamp on ammeters, to measure the input signals to the relays. This practice seems very risky, and a plant trip could result if the technician were to make an error while measuring these current and voltage signals. How can I avoid this risk? Also, what if no other instrument transformers are available which monitor the same primary voltage or current signal?

Comparing the input signals to the relays to the outputs of other independent instrument transformers monitoring the same primary current or voltage is just one method of verifying the instrument transformer inputs to the relays, but is not required by the standard. Plants can choose how to best manage their risk. If online testing is deemed too risky, offline tests, such as, but not limited to, CT excitation test and PT turns ratio tests can be compared to baseline data and be used in conjunction with CT and PT secondary wiring insulation verification tests to adequately "verify the current and voltage circuit inputs from the voltage and current sensing devices to the protective relays …" while eliminating the risk of tripping an in service generator or transformer. Similarly, this same offline test methodology can be used to verify the relay input voltage and current signals to relays when there are no other instrument transformers monitoring available for purposes of signal comparison.

15.3 Control circuitry associated with protective functions (Table 1-5)

This component of Protection Systems includes the trip coil(s) of the circuit breaker, circuit switcher or any other interrupting device. It includes the wiring from the batteries to the relays. It includes the wiring (or other signal conveyance) from every trip output to every trip coil. It includes any device needed for the correct processing of the needed trip signal to the trip coil of the interrupting device; this requirement is meant to capture inputs and outputs to and from a protective relay that are necessary for the correct operation of the protective functions. In short, every trip path must be verified; the method of verification is optional to the asset owner. An example of testing methods to accomplish this might be to verify, with a volt-meter, the existence of the proper voltage at the open contacts, the open circuited input circuit and at the trip coil(s). As every parallel trip path has similar failure modes, each trip path from relay to trip coil must be verified. Each trip coil must be tested to trip the circuit breaker (or other interrupting device) at least once. There is a requirement to operate the circuit breaker (or other interrupting device) at least once every six years as part of the complete functional test. If a suitable monitoring system is installed that verifies every parallel trip path, then the manual-intervention testing of those parallel trip paths can be eliminated; however, the actual operation of the circuit breaker must still occur at least once every six years. This six-year tripping requirement can be completed as easily as tracking the Real-time Fault-clearing operations on the circuit breaker, or tracking the trip coil(s) operation(s) during circuit breaker routine maintenance actions.

The circuit-interrupting device should not be confused with a motor-operated disconnect. The intent of this standard is to require maintenance intervals and activities on Protection Systems equipment, and not just all system isolating equipment.

It is necessary, however, to classify a device that actuates a high-speed auto-closing ground switch as an interrupting device, if this ground switch is utilized in a Protection System and forces a ground Fault to occur that then results in an expected Protection System operation to clear the forced ground Fault. The SDT believes that this is essentially a transferred-tripping device without the use of communications equipment. If this high-speed ground switch is "…designed to provide protection for the BES…" then this device needs to be treated as any other Protection System component. The control circuitry would have to be tested within 12 years, and any electromechanically operated device will have to be tested every six years. If the spring-operated ground switch can be disconnected from the solenoid triggering unit, then the solenoid triggering unit can easily be tested without the actual closing of the ground blade.

The dc control circuitry also includes each auxiliary tripping relay (94) and each lock-out relay (86) that may exist in any particular trip scheme. If the lock-out relays (86) are electromechanical type components, then they must be trip tested. The PSMT SDT considers these components to share some similarities in failure modes as electromechanical protective relays; as such, there is a six-year maximum interval between mandated maintenance tasks unless PBM is applied.

Contacts of the 86 and/or 94 that pass the trip current on to the circuit interrupting device trip coils will have to be checked as part of the 12 year requirement. Contacts of the 86 and/or 94 lock relay that operate non-BES interrupting devices are not required. Normally-open contacts that are not used to pass a trip signal and normally-closed contacts do not have to be verified. Verification of the tripping paths is the requirement.

While relays that do not respond to electrical quantities are presently excluded from this standard, their control circuits are included if the relay is installed to detect Faults on BES Elements. Thus, the control circuit of a BES transformer sudden pressure relay should be verified every 12 years, assuming its integrity is not monitored. While a sudden pressure relay control circuit is included within the scope of PRC-005-2, other alarming relay control circuits, (i.e., SF-6 low gas) are not included, even though they may trip the breaker being monitored.

New technology is also accommodated here; there are some tripping systems that have replaced the traditional hard-wired trip circuitry with other methods of trip-signal conveyance such as fiber-optics. It is the intent of the PSMT SDT to include this, and any other, technology that is used to convey a trip signal from a protective relay to a circuit breaker (or other interrupting device) within this category of equipment. The requirement for these systems is verification of the tripping path.

Monitoring of the control circuit integrity allows for no maintenance activity on the control circuit (excluding the requirement to operate trip coils and electromechanical lockout and/or tripping auxiliary relays). Monitoring of integrity means to monitor for continuity and/or presence of voltage on each trip path. For Ethernet or fiber-optic control systems, monitoring of integrity means to monitor communication ability between the relay and the circuit breaker.

The trip path from a sudden pressure device is a part of the Protection System control circuitry. The sensing element is omitted from PRC-005-2 testing requirements because the SDT is unaware of industry-recognized testing protocol for the sensing elements. The SDT believes

that Protection Systems that trip (or can trip) the BES should be included. This position is consistent with the currently-approved PRC-005-1, consistent with the SAR for Project 2007-17, and understands this to be consistent with the position of FERC staff.

15.3.1 Frequently Asked Questions:

Is it permissible to verify circuit breaker tripping at a different time (and interval) than when we verify the protective relays and the instrument transformers?

Yes, provided the entire Protective System is tested within the individual component's maximum allowable testing intervals.

The Protection System Maintenance Standard describes requirements for verifying the tripping of circuit breakers. What is this telling me about maintenance of circuit breakers?

Requirements in PRC-005-2 are intended to verify the integrity of tripping circuits, including the breaker trip coil, as well as the presence of auxiliary supply (usually a battery) for energizing the trip coil if a protection function operates. Beyond this, PRC-005-2 sets no requirements for verifying circuit breaker performance, or for maintenance of the circuit breaker.

How do I test each dc Control Circuit trip path, as established in Table 1-5 "Protection System Control Circuitry (Trip coils and auxiliary relays)"?

Table 1-5 specifies that each breaker trip coil and lockout relays that carry trip current to a trip coil must be operated within the specified time period. The required operations may be via targeted maintenance activities, or by documented operation of these devices for other purposes such as Fault clearing.

Are high-speed ground switch trip coils included in the dc control circuitry?

Yes. PRC-005-2 includes high-speed grounding switch trip coils within the dc control circuitry to the degree that the initiating Protection Systems are characterized as "transmission Protection Systems."

Does the control circuitry and trip coil of a non-BES breaker, tripped via a BES protection component, have to be tested per Table 1.5? (Refer to Table 3 for examples 1 and 2)Example 1: A non-BES circuit breaker that is tripped via a Protection System to which PRC-005-2 applies might be (but is not limited to) a 12.5KV circuit breaker feeding (non-black-start) radial Loads but has a trip that originates from an under-frequency (81) relay.

- The relay must be verified.
- The voltage signal to the relay must be verified.
- All of the relevant dc supply tests still apply.
- .
- The unmonitored trip circuit between the relay and any lock-out or auxiliary relay must be verified every 12 years.
- The unmonitored trip circuit between the lock-out (or auxiliary relay) and the non-BES breaker does not have to be proven with an electrical trip.
- In the case where there is no lock-out or auxiliary tripping relay used, the trip circuit to the non-BES breaker does not have to be proven with an electrical trip.

- The trip coil of the non-BES circuit breaker does not have to be individually proven with an electrical trip.

Example 2: A Transmission Owner may have a non-BES breaker that is tripped via a Protection System to which PRC-005-2 applies, which may be (but is not limted to) a 13.8 KV circuit breaker feeding (non-black-start) radial Loads but has a trip that originates from a BES 115KV line relay.

- The relay must be verified
- The voltage signal to the relay must be verified
- All of the relevant dc supply tests still apply
-
- The unmonitored trip circuit between the relay and any lock-out (86) or auxiliary (94) relay must be verified every 12 years
- The unmonitored trip circuit between the lock-out (86) (or auxiliary (94)) relay and the non-BES breaker does not have to be proven with an electrical trip
- In the case where there is no lockout (86) or auxiliary (94) tripping relay used, the trip circuit to the non-BES breaker does not have to be proven with an electrical trip.
- The trip coil of the non-BES circuit breaker does not have to be individually proven with an electrical trip

Example 3: A Generator Owner may have an non-BES circuit breaker that is tripped via a Protection System to which PRC-005-2 applies, such as the generator field breaker and low-side breakers on station service/excitation transformers connected to the generator bus.

Trip testing of the generator field breaker and low side station service/excitation transformer breaker(s) via lockout or auxiliairy tripping relays are not required since these breakers may be associated with radially fed loads and are not considered to be BES breakers. An example of an otherwise non-BES circuit breaker that is tripped via a BES protection component might be (but is not limited to) a 6.9kV station service transformer source circuit breaker but has a trip that originates from a generator differential (87) relay.

- The differential relay must be verified.
- The current signals to the relay must be verified.
- All of the relevant dc supply tests still apply.
- The unmonitored trip circuit between the relay and any lock-out or auxiliary relay must be verified every 12 years.
- The unmonitored trip circuit between the lock-out (or auxiliary relay) and the non-BES breaker does not have to be proven with an electrical trip.
- In the case where there is no lock-out or auxiliary tripping relay used, the trip circuit to the non-BES breaker does not have to be proven with an electrical trip.
- The trip coil of the non-BES circuit breaker does not have to be individually proven with an electrical trip.

However, it is very prudent to verify the tripping of such breakers for the integrity of the overall generation plant.

Do I have to verify operation of breaker "a" contacts or any other normally closed auxiliary contacts in the trip path of each breaker as part of my control circuit test?

Operation of normally-closed contacts does not have to be verified. Verification of the tripping paths is the requirement. The continuity of the normally closed contacts will be verified when the tripping path is verified.

15.4 Batteries and DC Supplies (Table 1-4)

The NERC definition of a Protection System is:

- Protective relays which respond to electrical quantities,
- Communications Systems necessary for correct operation of protective functions,
- Voltage and current sensing devices providing inputs to protective relays,
- Station dc supply associated with protective functions (including station batteries, battery chargers, and non-battery-based dc supply), and
- Control circuitry associated with protective functions through the trip coil(s) of the circuit breakers or other interrupting devices.

The station battery is not the only component that provides dc power to a Protection System. In the new definition for Protection System, "station batteries" are replaced with "station dc supply" to make the battery charger and dc producing stored energy devices (that are not a battery) part of the Protection System that must be maintained.

The PSMT SDT recognizes that there are several technological advances in equipment and testing procedures that allow the owner to choose how to verify that a battery string is free of open circuits. The term "continuity" was introduced into the standard to allow the owner to choose how to verify continuity of a battery set by various methods, and not to limit the owner to other conventional methods of showing continuity. Continuity, as used in Table 1-4 of the standard, refers to verifying that there is a continuous current path from the positive terminal of the station battery set to the negative terminal. Without verifying continuity of a station battery, there is no way to determine that the station battery is available to supply dc power to the station. An open battery string will be an unavailable power source in the event of loss of the battery charger.

Batteries cannot be a unique population segment of a Performance-Based Maintenance Program (PBM) because there are too many variables in the electrochemical process to completely isolate all of the performance-changing criteria necessary for using PBM on battery Systems. However, nothing precludes the use of a PBM process for any other part of a dc supply besides the batteries themselves.

15.4.1 Frequently Asked Questions:

What constitutes the station dc supply, as mentioned in the definition of Protective System?

The previous definition of Protection System includes batteries, but leaves out chargers. The latest definition includes chargers, as well as dc systems that do not utilize batteries. This revision of PRC-005-2 is intended to capture these devices that were not included under the previous definition. The station direct current (dc) supply normally consists of two components: the battery charger and the station battery itself. There are also emerging

technologies that provide a source of dc supply that does not include either a battery or charger.

Battery Charger - The battery charger is supplied by an available ac source. At a minimum, the battery charger must be sized to charge the battery (after discharge) and supply the constant dc load. In many cases, it may be sized also to provide sufficient dc current to handle the higher energy requirements of tripping breakers and switches when actuated by the protective relays in the Protection System.

Station Battery - Station batteries provide the dc power required for tripping and for supplying normal dc power to the station in the event of loss of the battery charger. There are several technologies of battery that require unique forms of maintenance as established in Table 1-4.

Emerging Technologies - Station dc supplies are currently being developed that use other energy storage technologies besides the station battery to prevent loss of the station dc supply when ac power is lost. Maintenance of these station dc supplies will require different kinds of tests and inspections. Table 1-4 presents maintenance activities and maximum allowable testing intervals for these new station dc supply technologies. However, because these technologies are relatively new, the maintenance activities for these station dc supplies may change over time.

What did the PSMT SDT mean by "continuity" of the dc supply?

The PSMT SDT recognizes that there are several technological advances in equipment and testing procedures that allow the owner to choose how to verify that a battery string is free of open circuits. The term "continuity" was introduced into the standard to allow the owner to choose how to verify continuity (no open circuits) of a battery set by various methods, and not to limit the owner to other conventional methods of showing continuity – lack of an open circuit. Continuity, as used in Table 1-4 of the standard, refers to verifying that there is a continuous current path from the positive terminal of the station battery set to the negative terminal (no open circuit). Without verifying continuity of a station battery, there is no way to determine that the station battery is available to supply dc power to the station. Whether it is caused from an open cell or a bad external connection, an open battery string will be an unavailable power source in the event of loss of the battery charger.

The current path through a station battery from its positive to its negative connection to the dc control circuits is composed of two types of elements. These path elements are the electrochemical path through each of its cells and all of the internal and external metallic connections and terminations of the batteries in the battery set. If there is loss of continuity (an open circuit) in any part of the electrochemical or metallic path, the battery set will not be available for service. In the event of the loss of the ac source or battery charger, the battery must be capable of supplying dc current, both for continuous dc loads and for tripping breakers and switches. Without continuity, the battery cannot perform this function.
At generating stations and large transmission stations where battery chargers are capable of handling the maximum current required by the Protection System, there are still problems that could potentially occur when the continuity through the connected battery is interrupted.

- Many battery chargers produce harmonics which can cause failure of dc power supplies in microprocessor-based protective relays and other electronic devices connected to station dc supply. In these cases, the substation battery serves as a filter for these

harmonics. With the loss of continuity in the battery, the filter provided by the battery is no longer present.

- Loss of electrical continuity of the station battery will cause, in most battery chargers, regardless of the battery charger's output current capability, a delayed response in full output current from the charger. Almost all chargers have an intentional one- to two-second delay to switch from a low substation dc load current to the maximum output of the charger. This delay would cause the opening of circuit breakers to be delayed, which could violate system performance standards.

Monitoring of the station dc supply voltage will not indicate that there is a problem with the dc current path through the battery, unless the battery charger is taken out of service. At that time, a break in the continuity of the station battery current path will be revealed because there will be no voltage on the station dc circuitry. This particular test method, while proving battery continuity, may not be acceptable to all installations.

Although the standard prescribes what must be accomplished during the maintenance activity, it does not prescribe how the maintenance activity should be accomplished. There are several methods that can be used to verify the electrical continuity of the battery. These are not the only possible methods, simply a sampling of some methods:

- One method is to measure that there is current flowing through the battery itself by a simple clamp on milliamp-range ammeter. A battery is always either charging or discharging. Even when a battery is charged, there is still a measurable float charge current that can be detected to verify that there is continuity in the electrical path through the battery.
- A simple test for continuity is to remove the battery charger from service and verify that the battery provides voltage and current to the dc system. However, the behavior of the various dc-supplied equipment in the station should be considered before using this approach.
- Manufacturers of microprocessor-controlled battery chargers have developed methods for their equipment to periodically (or continuously) test for battery continuity. For example, one manufacturer periodically reduces the float voltage on the battery until current from the battery to the dc load can be measured to confirm continuity.
- Applying test current (as in some ohmic testing devices, or devices for locating dc grounds) will provide a current that when measured elsewhere in the string, will prove that the circuit is continuous.
- Internal ohmic measurements of the cells and units of lead-acid batteries (VRLA & VLA) can detect lack of continuity within the cells of a battery string; and when used in conjunction with resistance measurements of the battery's external connections, can prove continuity. Also some methods of taking internal ohmic measurements, by their very nature, can prove the continuity of a battery string without having to use the results of resistance measurements of the external connections.
- Specific gravity tests could infer continuity because without continuity there could be no charging occurring; and if there is no charging, then specific gravity will go down below acceptable levels over time.

No matter how the electrical continuity of a battery set is verified, it is a necessary maintenance activity that must be performed at the intervals prescribed by Table 1-4 to insure that the station dc supply has a path that can provide the required current to the Protection System at all times.

When should I check the station batteries to see if they have sufficient energy to perform as manufactured?

The answer to this question depends on the type of battery (valve-regulated lead-acid, vented lead-acid, or nickel-cadmium) and the maintenance activity chosen.

For example, if you have a valve-regulated lead-acid (VRLA) station battery, and you have chosen to evaluate the measured cell/unit internal ohmic values to the battery cell's baseline, you will have to perform verification at a maximum maintenance interval of no greater than every six months. While this interval might seem to be quite short, keep in mind that the six-month interval is important for VRLA batteries; this interval provides an accumulation of data that better shows when a VRLA battery is incapable of performing as manufactured.

If, for a VRLA station battery, you choose to conduct a performance capacity test on the entire station battery as the maintenance activity, then you will have to perform verification at a maximum maintenance interval of no greater than every three calendar years.

How is a baseline established for cell/unit internal ohmic measurements?

Establishment of cell/unit internal ohmic baseline measurements should be completed when lead-acid batteries are newly installed. To ensure that the baseline ohmic cell/unit values are most indicative of the station battery's ability to perform as manufactured, they should be made at some point in time after the installation to allow the cell chemistry to stabilize after the initial freshening charge. An accepted industry practice for establishing baseline values is after six-months of installation, with the battery fully charged and in service. However, it is recommended that each owner, when establishing a baseline, should consult the battery manufacturer for specific instructions on establishing an ohmic baseline for their product, if available.

When internal ohmic measurements are taken, the same make/model test equipment should be used to establish the baseline and used for the future trending of the cells internal ohmic measurements because of variances in test equipment and the type of ohmic measurement used by different manufacturer's equipment. Keep in mind that one manufacturer's "Conductance" test equipment does not produce similar results as another manufacturer's "Conductance" test equipment, even though both manufacturers have produced "Ohmic" test equipment. Therefore, for meaningful results to an established baseline, the same make/modelof instrument should be used.

For all new installations of valve-regulated lead-acid (VRLA) batteries and vented lead-acid (VLA) batteries, where trending of the cells internal ohmic measurements to a baseline are to be used to determine the ability of the station battery to perform as manufactured, the establishment of the baseline, as described above, should be followed at the time of installation to insure the most accurate trending of the cell/unit. However, often for older VRLA batteries, the owners of the station batteries have not established a baseline at installation. Also for owners of VLA batteries who want to establish a maintenance activity which requires trending of measured ohmic values to a baseline, there was typically no baseline established at installation of the station battery to trend to.

To resolve the problem of the unavailability of baseline internal ohmic measurements for the individual cell/unit of a station battery, many manufacturers of internal ohmic measurement devices have established libraries of baseline values for VRLA and VLA batteries using their testing device. Also, several of the battery manufacturers have libraries of baselines for their products that can be used to trend to. However, it is important that when using battery manufacturer-supplied data that it is verified that the baseline readings to be used were taken with the same ohmic testing device that will be used for future measurements (for example "Conductance Readings" from one manufacturer's test equipment do not correlate to "Impedance Readings" from a different manufacturer's test equipment). Although many manufacturers may have provided baseline values, which will allow trending of the internal ohmic measurements over the remaining life of a station battery, these baselines are not the actual cell/unit measurements for the battery being trended. It is important to have a baseline tailored to the station battery to more accurately use the tool of ohmic measurement trending. That more customized baseline can only be created by following the establishment of a baseline for each cell/unit at the time of installation of the station battery.

Why determine the State of Charge?

Even though there is no present requirement to check the state of charge of a battery, it can be a very useful tool in determining the overall condition of a battery system. The following discussions are offered as a general reference.

When a battery is fully charged, the battery is available to deliver its existing capacity. As a battery is discharged, its ability to deliver its maximum available capacity is diminished. It is necessary to determine if the state of charge has dropped to an unacceptable level.

What is State of Charge and how can it be determined in a station battery?

The state of charge of a battery refers to the ratio of residual capacity at a given instant to the maximum capacity available from the battery. When a battery is fully charged, the battery is available to deliver its existing capacity. As a battery is discharged, its ability to deliver its maximum available capacity is diminished. Knowing the amount of energy left in a battery compared with the energy it had when it was fully charged gives the user an indication of how much longer a battery will continue to perform before it needs recharging.

For vented lead-acid (VLA) batteries which use accessible liquid electrolyte, a hydrometer can be used to test the specific gravity of each cell as a measure of its state of charge. The hydrometer depends on measuring changes in the weight of the active chemicals. As the battery discharges, the active electrolyte, sulfuric acid, is consumed and the concentration of the sulfuric acid in water is reduced. This, in turn, reduces the specific gravity of the solution in direct proportion to the state of charge. The actual specific gravity of the electrolyte can, therefore, be used as an indication of the state of charge of the battery. Hydrometer readings may not tell the whole story, as it takes a while for the acid to get mixed up in the cells of a VLA battery. If measured right after charging, you might see high specific gravity readings at the top of the cell, even though it is much less at the bottom. Conversely, if taken shortly after adding water to the cell, the specific gravity readings near the top of the cell will be lower than those at the bottom.

Nickel-cadmium batteries, where the specific gravity of the electrolyte does not change during battery charge and discharge, and valve-regulated lead-acid (VRLA) batteries, where the electrolyte is not accessible, cannot have their state of charge determined by specific gravity

readings. For these two types of batteries, and for VLA batteries also, where another method besides taking hydrometer readings is desired, the state of charge may be determined by taking voltage and current readings at the battery terminals. The methods employed to obtain accurate readings vary for the different battery types. Manufacturers' information and IEEE guidelines can be consulted for specifics; (see IEEE 1106 Annex B for Nickel Cadmium batteries, IEEE 1188 Annex A for VRLA batteries and IEEE 450 for VLA batteries.

Why determine the Connection Resistance?

High connection resistance can cause abnormal voltage drop or excessive heating during discharge of a station battery. During periods of a high rate of discharge of the station battery, a very high resistance can cause severe damage. The maintenance requirement to verify battery terminal connection resistance in Table 1-4 is established to verify that the integrity of all battery electrical connections is acceptable. This verification includes cell-to-cell (intercell) and external circuit terminations. Your method of checking for acceptable values of intercell and terminal connection resistance could be by individual readings, or a combination of the two. There are test methods presently that can read post termination resistances and resistance values between external posts. There are also test methods presently available that take a combination reading of the post termination connection resistance plus the intercell resistance value plus the post termination connection resistance value. Either of the two methods, or any other method, that can show if the adequacy of connections at the battery posts is acceptable.

Adequacy of the electrical terminations can be determined by comparing resistance measurements for all connections taken at the time of station battery's installation to the same resistance measurements taken at the maintenance interval chosen, not to exceed the maximum maintenance interval of Table 1-4. Trending of the interval measurements to the baseline measurements will identify any degradation in the battery connections. When the connection resistance values exceed the acceptance criteria for the connection, the connection is typically disassembled, cleaned, reassembled and measurements taken to verify that the measurements are adequate when compared to the baseline readings.

What conditions should be inspected for visible battery cells?

The maintenance requirement to inspect the cell condition of all station battery cells where the cells are visible is a maintenance requirement of Table 1-4. Station batteries are different from any other component in the Protection Station because they are a perishable product due to the electrochemical process which is used to produce dc electrical current and voltage. This inspection is a detailed visual inspection of the cells for abnormalities that occur in the aging process of the cell. In VLA battery visual inspections, some of the things that the inspector is typically looking for on the plates are signs of sulfation of the plates, abnormal colors (which are an indicator of sulfation or possible copper contamination) and abnormal conditions such as cracked grids. The visual inspection could look for symptoms of hydration that would indicate that the battery has been left in a completely discharged state for a prolonged period. Besides looking at the plates for signs of aging, all internal connections, such as the bus bar connection to each plate, and the connections to all posts of the battery need to be visually inspected for abnormalities. In a complete visual inspection for the condition of the cell the cell plates, separators and sediment space of each cell must be looked at for signs of deterioration. An inspection of the station battery's cell condition also includes looking at all terminal posts and cell-to-cell electric connections to ensure they are corrosion free. The case of the battery

containing the cell, or cells, must be inspected for cracks and electrolyte leaks through cracks and the post seals.

This maintenance activity cannot be extended beyond the maximum maintenance interval of Table 1-4 by a Performance-Based Maintenance Program (PBM) because of the electrochemical aging process of the station battery, nor can there be any monitoring associated with it because there must be a visual inspection involved in the activity. A remote visual inspection could possibly be done, but its interval must be no greater than the maximum maintenance interval of Table 1-4.

Why is it necessary to verify the battery string can perform as manufactured? I only care that the battery can trip the breaker, which means that the battery can perform as designed. I oversize my batteries so that even if the battery cannot perform as manufactured, it can still trip my breakers.

The fundamental answer to this question revolves around the concept of battery performance "as designed" vs. battery performance "as manufactured." The purpose of the various sections of Table 1-4 of this standard is to establish requirements for the Protection System owner to maintain the batteries, to ensure they will operate the equipment when there is an incident that requires dc power, and ensure the batteries will continue to provide adequate service until at least the next maintenance interval. To meet these goals, the correct battery has to be properly selected to meet the design parameters, and the battery has to deliver the power it was manufactured to provide.

When testing batteries, it may be difficult to determine the original design (i.e., load profile) of the dc system. This standard is not intended as a design document, and requirements relating to design are, therefore, not included.

Where the dc load profile is known, the best way to determine if the system will operate as designed is to conduct a service test on the battery. However, a service test alone might not fully determine if the battery is healthy. A battery with 50% capacity may be able to pass a service test, but the battery would be in a serious state of deterioration and could fail at some point in the near future.

To ensure that the battery will meet the required load profile and continue to meet the load profile until the next maintenance interval, the installed battery must be sized correctly (i.e., a correct design), and it must be in a good state of health. Since the design of the dc system is not within the scope of the standard, the only consistent and reliable method to ensure that the battery is in a good state of health is to confirm that it can perform as manufactured. If the battery can perform as manufactured and it has been designed properly, the system should operate properly until the next maintenance interval.

How do I verify the battery string can perform as manufactured?

Optimally, actual battery performance should be verified against the manufacturer's rating curves. The best practice for evaluating battery performance is via a performance test. However, due to both logistical and system reliability concerns, some Protection System owners prefer other methods to determine if a battery can perform as manufactured. There are several battery parameters that can be evaluated to determine if a battery can perform as manufactured. Ohmic measurements and float current are two examples of parameters that have been reported to assist in determining if a battery string can perform as manufactured.

The evaluation of battery parameters in determining battery health is a complex issue, and is not an exact science. This standard gives the user an opportunity to utilize other measured parameters to determine if the battery can perform as manufactured. It is the responsibility of the Protection System owner, however, to maintain a documented process that demonstrates the chosen parameter(s) and associated methodology used to determine if the battery string can perform as manufactured.

Whatever parameters are used to evaluate the battery (ohmic measurements, float current, float voltages, temperature, specific gravity, performance test, or combination thereof), the goal is to determine the value of the measurement (or the percentage change) at which the battery fails to perform as manufactured, or the point where the battery is deteriorating so rapidly that it will not perform as manufactured before the next maintenance interval.

This necessitates the need for establishing and documenting a baseline. A baseline may be required of every individual cell, a particular battery installation, or a specific make, model, or size of a cell. Given a consistent cell manufacturing process, it may be possible to establish a baseline number for the cell (make/model/type) and, therefore, a subsequent baseline for every installation would not be necessary. However, future installations of the same battery types should be spot-checked to ensure that your baseline remains applicable.

Consistent testing methods by trained personnel are essential. Moreover, it is essential that these technicians utilize the same make/model of ohmic test equipment each time readings are taken in order to establish a meaningful and accurate trendline against the established baseline. The type of probe and its location (post, connector, etc) for the reading need to be the same for each subsequent test. The room temperature should be recorded with the readings for each test as well. Care should be taken to consider any factors that might lead a trending program to become invalid.

Float current along with other measureable parameters can be used in lieu of or in concert with ohmic measurement testing to measure the ability of a battery to perform as manufactured. The key to using any of these measurement parameters is to establish a baseline and the point where the reading indicates that the battery will not perform as manufactured.

The establishment of a baseline may be different for various types of cells and for different types of installations. In some cases, it may be possible to obtain a baseline number from the battery manufacturer, although it is much more likely that the baseline will have to be established after the installation is complete. To some degree, the battery may still be "forming" after installation; consequently, determining a stable baseline may not be possible until several months after the battery has been in service.

The most important part of this process is to determine the point where the ohmic reading (or other measured parameter(s)) indicates that the battery cannot perform as manufactured. That point could be an absolute number, an absolute change, or a percentage change of an established baseline.

Since there are no universally-accepted repositories of this information, the Protection System owner will have to determine the value/percentage where the battery cannot perform as manufactured (heretofore referred to as a failed cell). This is the most difficult and important part of the entire process.

To determine the point where the battery fails to perform as manufactured, it is helpful to have a history of a battery type, if the data includes the parameter(s) used to evaluate the battery's ability to perform as manufactured against the actual demonstrated performance/capacity of a battery/cell.

For example, when an ohmic reading has been recorded that the user suspects is indicating a failed cell, a performance test of that cell (or string) should be conducted in order to prove/quantify that the cell has failed. Through this process, the user needs to determine the ohmic value at which the performance of the cell has dropped below 80% of the manufactured, rated performance. It is likely that there may be a variation in ohmic readings that indicates a failed cell (possibly significant). It is prudent to use the most conservative values to determine the point at which the cell should be marked for replacement. Periodically, the user should demonstrate that an “adequate” ohmic reading equates to an adequate battery performance (>80% of capacity).

Similarly, acceptance criteria for "good" and "failed" cells should be established for other parameters such as float current, specific gravity, etc., if used to determine the ability of a battery to function as designed.

What happens if I change the make/model of ohmic test equipment after the battery has been installed for a period of time?

If a user decides to switch testers, either voluntarily or because the equipment is not supported/sold any longer, the user may have to establish a new base line and new parameters that indicate when the battery no longer performs as manufactured. The user always has a choice to perform a capacity test in lieu of establishing new parameters.

What are some of the differences between lead-acid and nickel-cadmium batteries?

There is a marked difference in the aging process of lead acid and nickel-cadmium station batteries. The difference in the aging process of these two types of batteries is chiefly due to the electrochemical process of the battery type. Aging and eventual failure of lead acid batteries is due to expansion and corrosion of the positive grid structure, loss of positive plate active material, and loss of capacity caused by physical changes in the active material of the positive plates. In contrast, the primary failure of nickel-cadmium batteries is due to the gradual linear aging of the active materials in the plates. The electrolyte of a nickel-cadmium battery only facilitates the chemical reaction (it functions only to transfer ions between the positive and negative plates), but is not chemically altered during the process like the electrolyte of a lead acid battery. A lead acid battery experiences continued corrosion of the positive plate and grid structure throughout its operational life while a nickel-cadmium battery does not.

Changes to the properties of a lead acid battery when periodically measured and trended to a baseline, can indicate aging of the grid structure, positive plate deterioration, or changes in the active materials in the plate.

Because of the clear differences in the aging process of lead acid and nickel-cadmium batteries, there are no significantly measurable properties of the nickel-cadmium battery that can be measured at a periodic interval and trended to determine aging. For this reason, Table 1-4(c) (Protection System Station dc supply Using nickel-cadmium [NiCad] Batteries) only specifies one

minimum maintenance activity and associated maximum maintenance interval necessary to verify that the station battery can perform as manufactured by evaluating cell/unit measurements indicative of battery performance against the station battery baseline. This maintenance activity is to conduct a performance or modified performance capacity test of the entire battery bank.

Why in Table 1-4 of PRC-005-2 is there a maintenance activity to inspect the structural intergrity of the battery rack?

The purpose of this inspection is to verify that the battery rack is correctly installed and has no deterioration that could weaken its structural integrity.
Because the battery rack is specifically manufactured for the battery that is mounted on it, weakening of its structural members by rust or corrosion can physically jeopardize the battery.

What is required to comply with the "Unintentional dc Grounds" requirement?

In most cases, the first ground that appears on a battery is not a problem. It is the unintentional ground that appears on the opposite pole that becomes problematic. Even then many systems are designed to operate favorably under some unintentional DC ground situations. It is up to the owner of the Protection System to determine if corrective actions are needed on detected unintentional DC grounds. The standard merely requires that a check be made for the existence of Unintentional DC Grounds. Obviously, a "check-off" of some sort will have to be devised by the inspecting entity to document that a check is routinely done for Unintentional DC Grounds because of the possible consequences to the Protection System.

Where the standard refers to "all cells," is it sufficient to have a documentation method that refers to "all cells," or do we need to have separate documentation for every cell? For example, do I need 60 individual documented check-offs for good electrolyte level, or would a single check-off per bank be sufficient?

A single check-off per battery bank is sufficient for documentation, as long as the single check-off attests to checking all cells/units.

Does this standard refer to Station batteries or all batteries; for example, Communications Site Batteries?

This standard refers to Station Batteries. The drafting team does not believe that the scope of this standard refers to communications sites. The batteries covered under PRC-005-2 are the batteries that supply the trip current to the trip coils of the interrupting devices that are a part of the Protection System. The SDT believes that a loss of power to the communications systems at a remote site would cause the communications systems associated with protective relays to alarm at the substation. At this point, the corrective actions can be initiated.

What are cell/unit internal ohmic measurements?

With the introduction of Valve-Regulated Lead-Acid (VRLA) batteries to station dc supplies in the 1980's several of the standard maintenance tools that are used on Vented Lead-Acid (VLA) batteries were unable to be used on this new type of lead-acid battery to determine its state of health. The only tools that were available to give indication of the health of these new VRLA batteries were voltage readings of the total battery voltage, the voltage of the individual cells and periodic discharge tests.

In the search for a tool for determining the health of a VRLA battery several manufacturers studied the electrical model of a lead acid battery's current path through its cell. The overall battery current path consists of resistance and inductive and capacitive reactance. The

inductive reactance in the current path through the battery is so minuscule when compared to the huge capacitive reactance of the cells that it is often ignored in most circuit models of the battery cell. Taking the basic model of a battery cell manufacturers of battery test equipment have developed and marketed testing devices to take measurements of the current path to detect degradation in the internal path through the cell.

In the battery industry, these various types of measurements are referred to as ohmic measurements. Terms used by the industry to describe ohmic measurements are ac conductance, ac impedance, and dc resistance. They are defined by the test equipment providers and IEEE and refer to the method of taking ohmic measurements of a lead acid battery. For example, in one manufacturer's ac conductance equipment measurements are taken by applying a voltage of a known frequency and amplitude across a cell or battery unit and observing the ac current flow it produces in response to the voltage. A manufacturer of an ac impedance meter measures ac current of a known frequency and amplitude that is passed through the whole battery string and determines the impedances of each cell or unit by measuring the resultant ac voltage drop across them. On the other hand, dc resistance of a cell is measured by a third manufacturer's equipment by applying a dc load across the cell or unit and measuring the step change in both the voltage and current to calculate the internal dc resistance of the cell or unit.

It is important to note that because of the rapid development of the market for ohmic measurement devices, there were no standards developed or used to mandate the test signals used in making ohmic measurements. Manufacturers using proprietary methods and applying different frequencies and magnitudes for their signals have developed a diversity of measurement devices. This diversity in test signals coupled with the three different types of ohmic measurements techniques (impedance conductance and resistance) make it impossible to always get the same ohmic measurement for a cell with different ohmic measurement devices. However, IEEE has recognized the great value for choosing one device for ohmic measurement, no matter who makes it or the method to calculate the ohmic measurement. The only caution given by IEEE and the battery manufacturers is that when trending the cells of a lead acid station battery consistent ohmic measurement devices should be used to establish the baseline measurement and to trend the battery set for its entire life.

For VRLA batteries both IEEE Standard 1188 (Maintenance, Testing and Replacement of VRLA Batteries) and IEEE Standard 1187 (Installation Design and Installation of VRLA Batteries) recognize the importance of the maintenance activity of establishing a baseline for "cell/unit internal ohmic measurements (impedance, conductance and resistance)" and trending them at frequent intervals over the life of the battery. There are extensive discussions about the need for taking these measurements in these standards. IEEE Standard 1188 requires taking internal ohmic values as described in Annex C4 during regular inspections of the station battery. For VRLA batteries IEEE Standard 1188 in talking about the necessity of establishing a baseline and trending it over time says, "…depending on the degree of change a performance test, cell replacement or other corrective action may be necessary…" (IEEE std 1188-2005, C.4 page 18).

For VLA batteries IEEE Standard 484 (Installation of VLA batteries) gives several guidelines about establishing baseline measurements on newly installed lead acid stationary batteries. The standard also discusses the need to look for significant changes in the ohmic measurements, the caution that measurement data will differ with each type of model of instrument used, and lists a number of factors that affect ohmic measurements.

At the beginning of the 21st century, EPRI conducted a series of extensive studies to determine the relationship of internal ohmic measurements to the capacity of a lead acid battery cell. The studies indicated that internal ohmic measurements were in fact a good indicator of a lead acid battery cell's capacity, but because users often were only interested in the total station battery capacity and the technology does not precisely predict overall battery capacity, if a user only needs "an accurate measure of the overall battery capacity," they should "perform a battery capacity test."

Prior to the EPRI studies some large and small companies which owned and maintained station dc supplies in NERC Protection Systems developed maintenance programs where trending of ohmic measurements of cells/units of the station's battery became the maintenance activity for determining if the station battery could perform as manufactured. By evaluation of the trending of the ohmic measurements over time, the owner could track the performance of the individual components of the station battery and determine if a total station battery or components of it required capacity testing, removal, replacement or in many instances replacement of the entire station battery. By taking this condition based approach these owners have eliminated having to perform capacity testing at prescribed intervals to determine if a battery needs to be replaced and are still able to effectively determine if a station battery can perform as manufactured.

My VRLA batteries have multiple-cells within an individual battery jar (or unit); how am I expected to comply with the cell-to-cell ohmic measurement requirements on these units that I cannot get to?

Measurement of cell/unit (not all batteries allow access to "individual cells" some "units" or jars may have multiple cells within a jar) internal ohmic values of all types of lead acid batteries where the cells of the battery are not visible is a station dc supply maintenance activity in Table 1-4. In cases where individual cells in a multi-cell unit are inaccessible, an ohmic measurement of the entire unit may be made.

I have a concern about my batteries being used to support additional auxiliary loads beyond my protection control systems in a generation station. Is ohmic measurement testing sufficient for my needs?

While this standard is focused on addressing requirements for Protection Systems, if batteries are used to service other load requirements beyond that of Protection Systems (e.g. pumps, valves, inverter loads), the functional entity may consider additional testing to confirm that the capacity of the battery is sufficient to support all loads.

Why verify voltage?

There are two required maintenance activities associated with verification of dc voltages in Table 1-4. These two required activities are to verify station dc supply voltage and float voltage of the battery charger, and have different maximum maintenance intervals. Both of these voltage verification requirements relate directly to the battery charger maintenance.

The verification of the dc supply voltage is simply an observation of battery voltage to prove that the charger has not been lost or is not malfunctioning; a reading taken from the battery charger panel meter or even SCADA values of the dc voltage could be some of the ways that one could satisfy the requirements. Low battery voltage below float voltage indicates that the battery may be on discharge and, if not corrected, the station battery could discharge down to some extremely low value that will not operate the Protection System. High voltage, close to or

above the maximum allowable dc voltage for equipment connected to the station dc supply indicates the battery charger may be malfunctioning by producing high dc voltage levels on the Protection System. If corrective actions are not taken to bring the high voltage down, the dc power supplies and other electronic devices connected to the station dc supply may be damaged. The maintenance activity of verifying the float voltage of the battery charger is not to prove that a charger is lost or producing high voltages on the station dc supply, but rather to prove that the charger is properly floating the battery within the proper voltage limits. As above, there are many ways that this requirement can be met.

Why check for the electrolyte level?

In vented lead-acid (VLA) and nickel-cadmium (NiCad) batteries the visible electrolyte level must be checked as one of the required maintenance activities that must be performed at an interval that is equal to or less than the maximum maintenance interval of Table 1-4. Because the electrolyte level in valve-regulated lead-acid (VRLA) batteries cannot be observed, there is no maintenance activity listed in Table 1-4 of the standard for checking the electrolyte level. Low electrolyte level of any cell of a VLA or NiCad station battery is a condition requiring correction. Typically, the electrolyte level should be returned to an acceptable level for both types of batteries (VLA and NiCad) by adding distilled or other approved-quality water to the cell.

Often people confuse the interval for watering all cells required due to evaporation of the electrolyte in the station battery cells with the maximum maintenance interval required to check the electrolyte level. In many of the modern station batteries, the jar containing the electrolyte is so large with the band between the high and low electrolyte level so wide that normal evaporation which would require periodic watering of all cells takes several years to occur. However, because loss of electrolyte due to cracks in the jar, overcharging of the station battery, or other unforeseen events can cause rapid loss of electrolyte; the shorter maximum maintenance intervals for checking the electrolyte level are required. A low level of electrolyte in a VLA battery cell which exposes the tops of the plates can cause the exposed portion of the plates to accelerated sulfation resulting in loss of cell capacity. Also, in a VLA battery where the electrolyte level goes below the end of the cell withdrawal tube or filling funnel, gasses can exit the cell by the tube instead of the flame arrester and present an explosion hazard.

What are the parameters that can be evaluated in Tables 1-4(a) and 1-4(b)?

The most common parameter that is periodically trended and evaluated by industry today to verify that the station battery can perform as manufactured is internal ohmic cell/unit measurements.

In the mid 1990s, several large and small utilities began developing maintenance and testing programs for Protection System station batteries using a condition based maintenance approach of trending internal ohmic measurements to each station battery cell's baseline value. Battery owners use the data collected from this maintenance activity to determine (1) when a station battery requires a capacity test (instead of performing a capacity test on a predetermined, prescribed interval), (2) when an individual cell or battery unit should be replaced, or (3) based on the analysis of the trended data, if the station battery should be replaced without performing a capacity test.

Other examples of measurable parameters that can be periodically trended and evaluated for lead acid batteries are cell voltage, float current, connection resistance. However, periodically

trending and evaluating cell/unit Ohmic measurements are the most common battery/cell parameters that are evaluated by industry to verify a lead acid battery string can perform as manufactured.

Why does it appear that there are two maintenance activities in Table 1-4(b) (for VRLA batteries) that appear to be the same activity and have the same maximum maintenance interval?

There are two different and distinct reasons for doing almost the same maintenance activity at the same interval for valve-regulated lead-acid (VRLA) batteries. The first similar activity for VRLA batteries (Table 1-4(b)) that has the same maximum maintenance interval is to "measure battery cell/unit internal ohmic values." Part of the reason for this activity is because the visual inspection of the cell condition is unavailable for VRLA batteries. Besides the requirement to measure the internal ohmic measurements of VRLA batteries to determine the internal health of the cell, the maximum maintenance interval for this activity is significantly shorter than the interval for vented lead-acid (VLA) due to some unique failure modes for VRLA batteries. Some of the potential problems that VRLA batteries are susceptible to that do not affect VLA batteries are thermal runaway, cell dry-out, and cell reversal when one cell has a very low capacity.

The other similar activity listed in Table 1-4(b) is "…verify that the station battery can perform as manufactured by evaluating the measured cell/unit measurements indicative of battery performance (e.g internal ohmic values) against the station battery baseline." This activity allows an owner the option to choose between this activity with its much shorter maximum maintenance interval or the longer maximum maintenance interval for the maintenance activity to "Verify that the station battery can perform as manufactured by conducting a performance or modified performance capacity test of the entire battery bank."

For VRLA batteries, there are two drivers for internal ohmic readings. The first driver is for a means to trend battery life. Trending against the baseline of VRLA cells in a battery string is essential to determine the approximate state of health of the battery. Ohmic measurement testing may be used as the mechanism for measuring the battery cells. If all the cells in the string exhibit a consistent trend line and that trend line has not risen above a specific deviation (e.g. 30%) over baseline for impedance tests or below baseline for conductance tests, then a judgment can be made that the battery is still in a reasonably good state of health and able to 'perform as manufactured.' It is essential that the specific deviation mentioned above is based on data (test or otherwise) that correlates the ohmic readings for a specific battery/tester combination to the health of the battery. This is the intent of the "perform **as** manufactured six-month test" at Row 4 on Table 1-4b.

The second big driver is VRLA batteries tendency for thermal runaway. This is the intent of the "thermal runaway test" at Row 2 on Table 1-4b. In order to detect a cell in thermal runaway, you need not necessarily have a formal trending program. When a single cell/unit changes significantly or significantly varies from the other cells (e.g. a doubling of resistance/impedance or a 50% decrease in conductance), there is a high probability that the cell/unit/string needs to be replaced as soon as possible. In other words, if the battery is 10 years old and all the cells have approached a significant change in ohmic values over baseline, then you have a battery which is approaching end of life. You need to get ready to buy a new battery, but you do not have to worry about an impending catastrophic failure. On the other hand, if the battery is five years old and you have one cell that has a markedly different ohmic reading than all the other cells, then you need to be worried that this cell is susceptible to thermal runaway. If the float

(charging) current has risen significantly and the ohmic measurement has increased/decreased as described above then concern of catastrophic failure should trigger attention for corrective action.

If an entity elects to use a capacity test rather than a cell ohmic value trending program, this does not eliminate the need to be concerned about thermal runaway – the entity still needs to do the six-month readings and look for cells which are outliers in the string but they need not trend results against the factory/as new baseline. Some entities will not mind the extra administrative burden of having the ongoing trending program against baseline - others would rather just do the capacity test and not have to trend the data against baseline. Nonetheless, all entities must look for ohmic outliers on a six-month basis.

It is possible to accomplish both tasks listed (trend testing for capability and testing for thermal runaway candidates) with the very same ohmic test. It becomes an analysis exercise of watching the trend from baselines and watching for the oblique cell measurement.

In table 1-4(f) (Exclusions for Protection System Station dc Supply Monitoring Devices and Systems), must all component attributes listed in the table be met before an exclusion can be granted for a maintenance activity?

Table 1-4(f) was created by the drafting team to allow Protection System dc supply owners to obtain exclusions from periodic maintenance activities by using monitoring devices. The basis of the exclusions granted in the table is that the monitoring devices must incorporate the monitoring capability of microprocessor based components which perform continuous self-monitoring. For failure of the microprocessor device used in dc supply monitoring, the self checking routine in the microprocessor must generate an alarm which will be reported within 24 hours of device failure to a location where corrective action can be initiated.

Table 1-4(f) lists 8 component attributes along with a specific periodic maintenance activity associated with each of the 8 attributes listed. If an owner of a station dc supply wants to be excluded from periodically performing one of the 8 maintenance activities listed in table 1-4(f), the owner must have evidence that the monitoring and alarming component attributes associated with the excluded maintenance activity are met by the self checking microprocessor based device with the specific component attribute listed in the table 1-4(f).

For example if an owner of a VLA station battery does not want to “verify station dc supply voltage” every “4 calendar months” (see table 1-4(a)), the owner can install a monitoring and alarming device “with high and low voltage monitoring and alarming of the battery charger voltage to detect charger overvoltage and charger failure” and “no periodic verification of station dc supply voltage is required” (see table 1-4(f) first row). However, if for the same Protection System discussed above, the owner does not install “electrolyte level monitoring and alarming in every cell” and “unintentional dc ground monitoring and alarming” (see second and third rows of table 1-4(f)), the owner will have to “inspect electrolyte level and for unintentional grounds” every “4 calendar months” (see table 1-4(a)).

15.5 Associated communications equipment (Table 1-2)

The equipment used for tripping in a communications-assisted trip scheme is a vital piece of the trip circuit. Remote action causing a local trip can be thought of as another parallel trip path to the trip coil that must be tested. Besides the trip output and wiring to the trip coil(s), there is also a communications medium that must be maintained. Newer technologies now exist that achieve communications-assisted tripping without the conventional wiring practices of older technology. For example, older technologies may have included Frequency Shift Key methods. This technology requires that guard and trip levels be maintained. The actual tripping path(s) to the trip coil(s) may be tested as a parallel trip path within the dc control circuitry tests. Emerging technologies transfer digital information over a variety of carrier mediums that are then interpreted locally as trip signals. The requirements apply to the communicated signal needed for the proper operation of the protective relay trip logic or scheme. Therefore, this standard is applied to equipment used to convey both trip signals (permissive or direct) and block signals.

It was the intent of this standard to require that a test be performed on any communications-assisted trip scheme, regardless of the vintage of technology. The essential element is that the tripping (or blocking) occurs locally when the remote action has been asserted; or that the tripping (or blocking) occurs remotely when the local action is asserted. Note that the required testing can still be done within the concept of testing by overlapping segments. Associated communications equipment can be (but is not limited to) testing at other times and different frequencies as the protective relays, the individual trip paths and the affected circuit interrupting devices.

Some newer installations utilize digital signals over fiber-optics from the protective relays in the control house to the circuit interrupting device in the yard. This method of tripping the circuit breaker, even though it might be considered communications, must be maintained per the dc control circuitry maintenance requirements.

15.5.1 Frequently Asked Questions:

What are some examples of mechanisms to check communications equipment functioning?

For unmonitored Protection Systems, various types of communications systems will have different facilities for on-site integrity checking to be performed at least every four months during a substation visit. Some examples are, but not limited to:

- On-off power-line carrier systems can be checked by performing a manual carrier keying test between the line terminals, or carrier check-back test from one terminal.
- Systems which use frequency-shift communications with a continuous guard signal (over a telephone circuit, analog microwave system, etc.) can be checked by observing for a loss-of-guard indication or alarm. For frequency-shift power-line carrier systems, the guard signal level meter can also be checked.
- Hard-wired pilot wire line Protection Systems typically have pilot-wire monitoring relays that give an alarm indication for a pilot wire ground or open pilot wire circuit loop.
- Digital communications systems typically have a data reception indicator or data error indicator (based on loss of signal, bit error rate, or frame error checking).

For monitored Protection Systems, various types of communications systems will have different facilities for monitoring the presence of the communications channel, and activating alarms that can be monitored remotely. Some examples are, but not limited to:

- On-off power-line carrier systems can be shown to be operational by automated periodic power-line carrier check-back tests with remote alarming of failures.
- Systems which use a frequency-shift communications with a continuous guard signal (over a telephone circuit, analog microwave system, etc.) can be remotely monitored with a loss-of-guard alarm or low signal level alarm.
- Hard-wired pilot wire line Protection Systems can be monitored by remote alarming of pilot-wire monitoring relays.
- Digital communications systems can activate remotely monitored alarms for data reception loss or data error indications.
- Systems can be queried for the data error rates.

For the highest degree of monitoring of Protection Systems, the communications system must monitor all aspects of the performance and quality of the channel that show it meets the design performance criteria, including monitoring of the channel interface to protective relays.

- In many communications systems signal quality measurements, including signal-to-noise ratio, received signal level, reflected transmitter power or standing wave ratio, propagation delay, and data error rates are compared to alarm limits. These alarms are connected for remote monitoring.
- Alarms for inadequate performance are remotely monitored at all times, and the alarm communications system to the remote monitoring site must itself be continuously monitored to assure that the actual alarm status at the communications equipment location is continuously being reflected at the remote monitoring site.

What is needed for the four-month inspection of communications-assisted trip scheme equipment?

The four-month inspection applies to unmonitored equipment. An example of compliance with this requirement might be, but is not limited to:

With each site visit, check that the equipment is free from alarms; check any metered signal levels, and that power is still applied. While this might be explicit for a particular type of equipment (i.e., FSK equipment), the concept should be that the entity verify that the communications equipment that is used in a Protection System is operable through a cursory inspection and site visit. This site visit can be eliminated on this particular example if the FSK equipment had a monitored alarm on Loss of Guard. Blocking carrier systems with auto checkbacks will present an alarm when the channel fails allowing a visual indication. With no auto checkback, the channel integrity will need to be verified by a manual checkback or a two ended signal check. This check could also be eliminated by bring the auto checkback failure alarm to the monitored central location.

Does a fiber optic I/O scheme used for breaker tripping or control within a station, for example - transmitting a trip signal or control logic between the control house and the breaker control cabinet, constitute a communications system?

This equipment is presently classified as being part of the Protection System control circuitry and tested per the portions of Table 1 applicable to "Protection System Control Circuitry", rather than those portions of the table applicable to communications equipment.

What is meant by "Channel" and "Communications Systems" in Table 1-2?

The transmission of logic or data from a relay in one station to a relay in another station for use in a pilot relay scheme will require a communications system of some sort. Typical relay communications systems use fiber optics, leased audio channels, power line carrier, and microwave. The overall communications system includes the channel and the associated communications equipment.

This standard refers to the "channel" as the medium between the transmitters and receivers in the relay panels such as a leased audio or digital communications circuit, power line and power line carrier auxiliary equipment, and fiber. The dividing line between the channel and the associated communications equipment is different for each type of media.

Examples of the Channel:

- Power Line Carrier (PLC) - The PLC channel starts and ends at the PLC transmitter and receiver output unless there is an internal hybrid. The channel includes the external hybrids, tuners, wave traps and the power line itself.
- Microwave –The channel includes the microwave multiplexers, radios, antennae and associated auxiliary equipment. The audio tone and digital transmitters and receivers in the relay panel are the associated communications equipment.
- Digital/Audio Circuit – The channel includes the equipment within and between the substations. The associated communications equipment includes the relay panel transmitters and receivers and the interface equipment in the relays.

- Fiber Optic – The channel starts at the fiber optic connectors on the fiber distribution panel at the local station and goes to the fiber optic distribution panel at the remote substation. The jumpers that connect the relaying equipment to the fiber distribution panel and any optical-electrical signal format converters are the associated communications equipment

Figure 1-2, A-1 and A-2 at the end of this document show good examples of the communications channel and the associated communications equipment.

In Table 1-2, the Maintenance Activities section of the Protective System Communications Equipment and Channels refers to the quality of the channel meeting "performance criteria." What is meant by performance criteria?

Protection System communications channels must have a means of determining if the channel and communications equipment is operating normally. If the channel is not operating normally, an alarm will be indicated. For unmonitored systems, this alarm will probably be on the panel. For monitored systems, the alarm will be transmitted to a remote location.

Each entity will have established a nominal performance level for each Protection System communications channel that is consistent with proper functioning of the Protection System. If that level of nominal performance is not being met, the system will go into alarm. Following are some examples of Protection System communications channel performance measuring:

- For direct transfer trip using a frequency shift power line carrier channel, a guard level monitor is part of the equipment. A normal receive level is established when the system is calibrated and if the signal level drops below an established level, the system will indicate an alarm.
- An on-off blocking signal over power line carrier is used for directional comparison blocking schemes on transmission lines. During a Fault, block logic is sent to the remote relays by turning on a local transmitter and sending the signal over the power line to a receiver at the remote end. This signal is normally off so continuous levels cannot be checked. These schemes use check-back testing to determine channel performance. A predetermined signal sequence is sent to the remote end and the remote end decodes this signal and sends a signal sequence back. If the sending end receives the correct information from the remote terminal, the test passes and no alarm is indicated. Full power and reduced power tests are typically run. Power levels for these tests are determined at the time of calibration.
- Pilot wire relay systems use a hardwire communications circuit to communicate between the local and remote ends of the protective zone. This circuit is monitored by circulating a dc current between the relay systems. A typical level may be 1 mA. If the level drops below the setting of the alarm monitor, the system will indicate an alarm.
- Modern digital relay systems use data communications to transmit relay information to the remote end relays. An example of this is a line current differential scheme commonly used on transmission lines. The protective relays communicate current magnitude and phase information over the communications path to determine if the Fault is located in the protective zone. Quantities such as digital packet loss, bit error rate and channel delay are monitored to determine the quality of the channel. These

limits are determined and set during relay commissioning. Once set, any channel quality problems that fall outside the set levels will indicate an alarm.

The previous examples show how some protective relay communications channels can be monitored and how the channel performance can be compared to performance criteria established by the entity. This standard does not state what the performance criteria will be; it just requires that the entity establish nominal criteria so Protection System channel monitoring can be performed.

How is the performance criteria of Protection System communications equipment involved in the maintenance program?

An entity determines the acceptable performance criteria, depending on the technology implemented. If the communications channel performance of a Protection System varies from the pre-determined performance criteria for that system, then these results should be investigated and resolved.

How do I verify the A/D converters of microprocessor-based relays?

There are a variety of ways to do this. Two examples would be: using values gathered via data communications and automatically comparing these values with values from other sources, or using groupings of other measurements (such as vector summation of bus feeder currents) for comparison. Many other methods are possible.

15.6 Alarms (Table 2)

In addition to the tables of maintenance for the components of a Protection System, there is an additional table added for alarms. This additional table was added for clarity. This enabled the common alarm attributes to be consolidated into a single spot, and, thus, make it easier to read the Tables 1-1 through 1-5. The alarms need to arrive at a site wherein a corrective action can be initiated. This could be a control room, operations center, etc. The alarming mechanism can be a standard alarming system or an auto-polling system; the only requirement is that the alarm be brought to the action-site within 24 hours. This effectively makes manned-stations equivalent to monitored stations. The alarm of a monitored point (for example a monitored trip path with a lamp) in a manned-station now makes that monitored point eligible for monitored status. Obviously, these same rules apply to a non-manned-station, which is that if the monitored point has an alarm that is auto-reported to the operations center (for example) within 24 hours, then it too is considered monitored.

15.6.1 Frequently Asked Questions:

Why are there activities defined for varying degrees of monitoring a Protection System component when that level of technology may not yet be available?

There may already be some equipment available that is capable of meeting the highest levels of monitoring criteria listed in the Tables. However, even if there is no equipment available today that can meet this level of monitoring the standard establishes the necessary requirements for when such equipment becomes available. By creating a roadmap for development, this provision makes the standard technology neutral. The Standard Drafting Team wants to avoid the need to revise the standard in a few years to accommodate technology advances that may be coming to the industry.

Does a fail-safe "form b" contact that is alarmed to a 24/7 operation center classify as an alarm path with monitoring?

If the fail-safe "form-b" contact that is alarmed to a 24/7 operation center causes the alarm to activate for failure of any portion of the alarming path from the alarm origin to the 24/7 operations center, then this can be classified as an alarm path with monitoring.

15.7 Distributed UFLS and Distributed UVLS Systems (Table 3)

Distributed UFLS and distributed UVLS systems have their maintenance activities documented in Table 3 due to their distributed nature allowing reduced maintenance activities and extended maximum maintenance intervals. Relays have the same maintenance activities and intervals as Table 1-1. Voltage and current-sensing devices have the same maintenance activity and interval as Table 1-3. DC systems need only have their voltage read at the relay every 12 years. Control circuits have the following maintenance activities every 12 years:

- Verify the trip path between the relay and lock-out and/or auxiliary tripping device(s).
- Verify operation of any lock-out and/or auxiliary tripping device(s) used in the trip circuit.
- No verification of trip path required between the lock-out (and/or auxiliary tripping device) and the non-BES interrupting device.
- No verification of trip path required between the relay and trip coil for circuits that have no lock-out and/or auxiliary tripping device(s).
- No verification of trip coil required.

No maintenance activity is required for associated communication systems for distributed UFLS and distributed UVLS schemes.

Non-BES interrupting devices that participate in a distributed UFLS or distributed UVLS scheme are excluded from the tripping requirement, and part of the control circuit test requirement; however, the part of the trip path control circuitry between the Load-Shed relay and lock-out or auxiliary tripping relay must be tested at least once every 12 years. In the case where there is no lock-out or auxiliary tripping relay used in a distributed UFLS or UVLS scheme which is not part of the BES, there is no control circuit test requirement. There are many circuit interrupting devices in the distribution system that will be operating for any given under-frequency event that requires tripping for that event. A failure in the tripping action of a single distributed system circuit breaker (or non-BES equipment interruption device) will be far less significant than, for example, any single transmission Protection System failure, such as a failure of a bus differential lock-out relay. While many failures of these distributed system circuit breakers (or non-BES equipment interruption device) could add up to be significant, it is also believed that many circuit breakers are operated often on just Fault clearing duty; and, therefore, these circuit breakers are operated at least as frequently as any requirements that appear in this standard.

There are times when a Protection System component will be used on a BES device, as well as a non-BES device, such as a battery bank that serves both a BES circuit breaker and a non-BES interrupting device used for UFLS. In such a case, the battery bank (or other Protection System component) will be subject to the Tables of the standard because it is used for the BES.

15.7.1 Frequently Asked Questions:

The standard reaches further into the distribution system than we would like for UFLS and UVLS

While UFLS and UVLS equipment are located on the distribution network, their job is to protect the Bulk Electric System. This is not beyond the scope of NERC's 215 authority.

FPA section 215(a) definitions section defines bulk power system as: "(A) facilities and control Systems necessary for operating an interconnected electric energy transmission network (or any portion thereof)." That definition, then, is limited by a later statement which adds the term bulk power system "…does not include facilities used in the local distribution of electric energy." Also, Section 215 also covers users, owners, and operators of bulk power Facilities.

UFLS and UVLS (when the UVLS is installed to prevent system voltage collapse or voltage instability for BES reliability) are not "used in the local distribution of electric energy," despite their location on local distribution networks. Further, if UFLS/UVLS Facilities were not covered by the reliability standards, then in order to protect the integrity of the BES during under-frequency or under-voltage events, that Load would have to be shed at the Transmission bus to ensure the Load-generation balance and voltage stability is maintained on the BES.

15.8 Examples of Evidence of Compliance

To comply with the requirements of this standard, an entity will have to document and save evidence. The evidence can be of many different forms. The Standard Drafting Team recognizes that there are concurrent evidence requirements of other NERC standards that could, at times, fulfill evidence requirements of this Standard.

15.8.1 Frequently Asked Questions:

What forms of evidence are acceptable?

Acceptable forms of evidence, as relevant for the requirement being documented include, but are not limited to:

- Process documents or plans
- Data (such as relay settings sheets, photos, SCADA, and test records)
- Database lists, records and/or screen shots that demonstrate compliance information
- Prints, diagrams and/or schematics
- Maintenance records
- Logs (operator, substation, and other types of log)
- Inspection forms
- Mail, memos, or email proving the required information was exchanged, coordinated, submitted or received
- Check-off forms (paper or electronic)
- Any record that demonstrates that the maintenance activity was known, accounted for, and/or performed.

If I replace a failed Protection System component with another component, what testing do I need to perform on the new component?

In order to reset the Table 1 maintenance interval for the replacement component, all relevant Table 1 activities for the component should be performed.

I have evidence to show compliance for PRC-016 ("Special Protection System Misoperation"). Can I also use it to show compliance for this Standard, PRC-005-2?

Maintaining evidence for operation of Special Protection Systems could concurrently be utilized as proof of the operation of the associated trip coil (provided one can be certain of the trip coil involved). Thus, the reporting requirements that one may have to do for the Misoperation of a Special Protection Scheme under PRC-016 could work for the activity tracking requirements under this PRC-005-2.

I maintain Disturbance records which show Protection System operations. Can I use these records to show compliance?

These records can be concurrently utilized as dc trip path verifications, to the degree that they demonstrate the proper function of that dc trip path.

I maintain test reports on some of my Protection System components. Can I use these test reports to show that I have verified a maintenance activity?

Yes.

References

1. Protection System Maintenance: A Technical Reference. Prepared by the System Protection and Controls Task Force of the NERC Planning Committee. Dated September 13, 2007.

2. "Predicating The Optimum Routine test Interval For Protection Relays," by J. J. Kumm, M.S. Weber, D. Hou, and E. O. Schweitzer, III, IEEE Transactions on Power Delivery, Vol. 10, No. 2, April 1995.

3. "Transmission Relay System Performance Comparison For 2000, 2001, 2002, 2003, 2004 and 2005," Working Group I17 of Power System Relaying Committee of IEEE Power Engineering Society, May 2006.

4. "A Survey of Relaying Test Practices," Special Report by WG I11 of Power System Relaying Committee of IEEE Power Engineering Society, September 16, 1999.

5. "Transmission Protective Relay System Performance Measuring Methodology," Working Group I3 of Power System Relaying Committee of IEEE Power Engineering Society, January 2002.

6. "Processes, Issues, Trends and Quality Control of Relay Settings," Working Group C3 of Power System Relaying Committee of IEEE Power Engineering Society, December 2006.

7. "Proposed Statistical Performance Measures for Microprocessor-Based Transmission-Line Protective Relays, Part I - Explanation of the Statistics, and Part II - Collection and Uses of Data," Working Group D5 of Power System Relaying Committee of IEEE Power Engineering Society, May 1995; Papers 96WM 016-6 PWRD and 96WM 127-1 PWRD, 1996 IEEE Power Engineering Society Winter Meeting.

8. "Analysis And Guidelines For Testing Numerical Protection Schemes," Final Report of CIGRE WG 34.10, August 2000.

9. "Use of Preventative Maintenance and System Performance Data to Optimize Scheduled Maintenance Intervals," H. Anderson, R. Loughlin, and J. Zipp, Georgia Tech Protective Relay Conference, May 1996.

10. "Battery Performance Monitoring by Internal Ohmic Measurements" EPRI Application Guidelines for Stationary Batteries TR- 108826 Final Report, December 1997.

11. "IEEE Recommended Practice for Maintenance, Testing, and Replacement of Valve-Regulated Lead-Acid (VRLA) Batteries for Stationary Applications," IEEE Power Engineering Society Std 1188 – 2005.

12. "IEEE Recommended Practice for Maintenance, Testing, and Replacement of Vented Lead-Acid Batteries for Stationary Applications," IEEE Power & Engineering Society Std 45-2010.

13. "IEEE Recommended Practice for Installation design and Installation of Vented Lead-Acid Batteries for Stationary Applications," IEEE Std 484 – 2002.

14. "Stationary Battery Monitoring by Internal Ohmic Measurements," EPRI Technical Report, 1002925 Final Report, December 2002.

15. "Stationary Battery Guide: Design Application, and Maintenance" EPRI Revision 2 of TR-100248, 1006757, August 2002.

PSMT SDT References

16. “Essentials of Statistics for Business and Economics” Anderson, Sweeney, Williams, 2003

17. “Introduction to Statistics and Data Analysis” - Second Edition, Peck, Olson, Devore, 2005

18. “Statistical Analysis for Business Decisions” Peters, Summers, 1968

Figures

Figure 1: Typical Transmission System

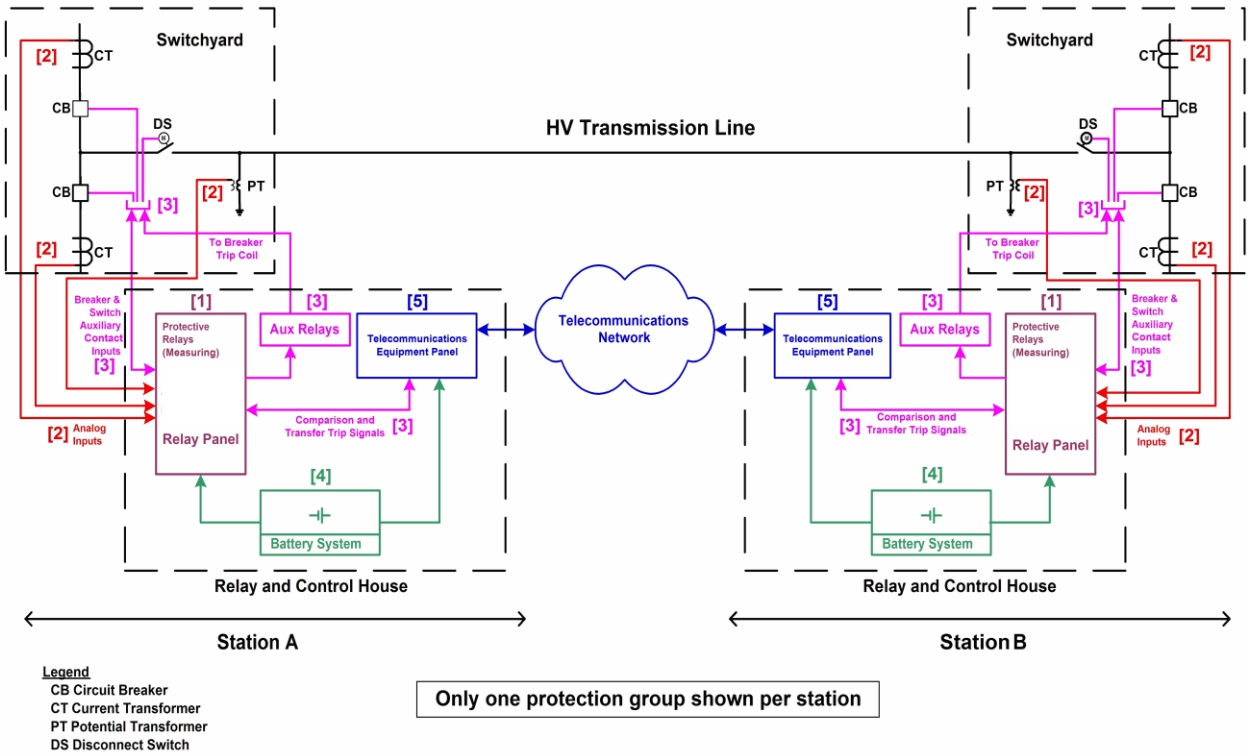

For information on components, see ***Figure 1 & 2 Legend – components of Protection Systems***

Figure 2: Typical Generation System

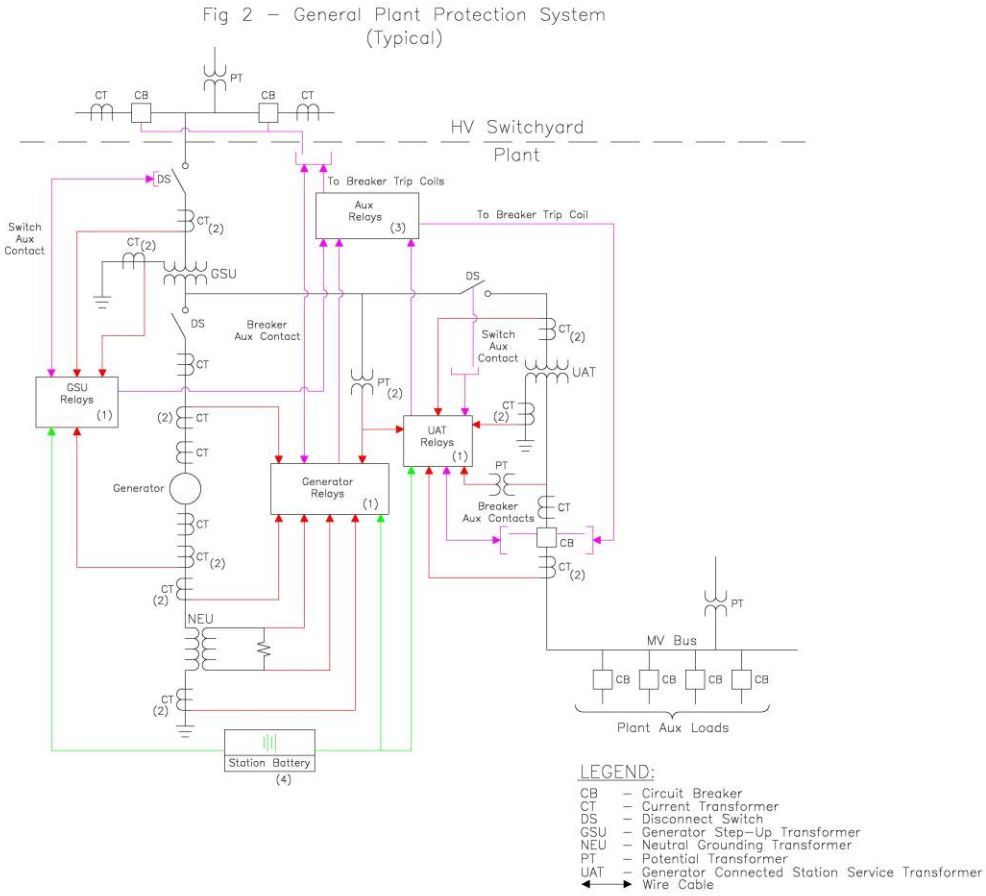

Note: Figure 2 may show elements that are not included within PRC-005-2, and also may not be all-inclusive; see the Applicability section of the standard for specifics.

For information on components, see ***Figure 1 & 2 Legend – components of Protection Systems***

Figure 1 & 2 Legend – components of Protection Systems

Number in Figure	component of Protection System	Includes	Excludes
1	Protective relays which respond to electrical quantities	All protective relays that use current and/or voltage inputs from current & voltage sensors and that trip the 86, 94 or trip coil.	Devices that use non-electrical methods of operation including thermal, pressure, gas accumulation, and vibration. Any ancillary equipment not specified in the definition of Protection Systems. Control and/or monitoring equipment that is not a part of the automatic tripping action of the Protection System
2	Voltage and current sensing devices providing inputs to protective relays	The signals from the voltage & current sensing devices to the protective relay input.	Voltage & current sensing devices that are not a part of the Protection System, including sync-check systems, metering systems and data acquisition systems.
3	Control circuitry associated with protective functions	All control wiring (or other medium for conveying trip signals) associated with the tripping action of 86 devices, 94 devices or trip coils (from all parallel trip paths). This would include fiber-optic systems that carry a trip signal as well as hard-wired systems that carry trip current.	Closing circuits, SCADA circuits, other devices in control scheme not passing trip current
4	Station dc supply	Batteries and battery chargers and any control power system which has the function of supplying power to the protective relays, associated trip circuits and trip coils.	Any power supplies that are not used to power protective relays or their associated trip circuits and trip coils.
5	Communications systems necessary for correct operation of protective functions	Tele-protection equipment used to convey specific information, in the form of analog or digital signals, necessary for the correct operation of protective functions.	Any communications equipment that is not used to convey information necessary for the correct operation of protective functions.

Additional information can be found in References

Appendix A

The following illustrates the concept of overlapping verifications and tests as summarized in Section 10 of the paper. As an example, Figure A-1 shows protection for a critical transmission line by carrier blocking directional comparison pilot relaying. The goal is to verify the ability of the entire two-terminal pilot protection scheme to protect for line Faults, and to avoid over-tripping for Faults external to the transmission line zone of protection bounded by the current transformer locations.

Figure A-1

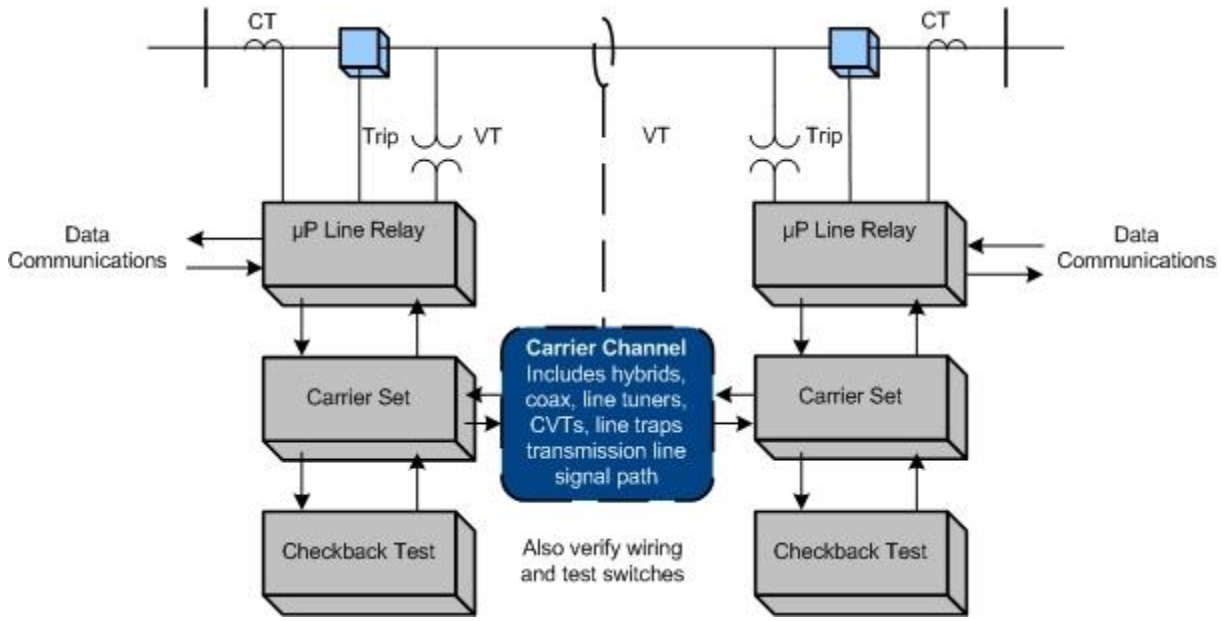

In this example (Figure A1), verification takes advantage of the self-monitoring features of microprocessor multifunction line relays at each end of the line. For each of the line relays themselves, the example assumes that the user has the following arrangements in place:

1. The relay has a data communications port that can be accessed from remote locations.
2. The relay has internal self-monitoring programs and functions that report failures of internal electronics, via communications messages or alarm contacts to SCADA.
3. The relays report loss of dc power, and the relays themselves or external monitors report the state of the dc battery supply.
4. The CT and PT inputs to the relays are used for continuous calculation of metered values of volts, amperes, plus Watts and VARs on the line. These metered values are reported by data communications. For maintenance, the user elects to compare these readings to those of other relays, meters, or DFRs. The other readings may be from redundant relaying or measurement systems or they may be derived from values in other protection zones. Comparison with other such readings to within required relaying accuracy verifies voltage & current sensing devices, wiring, and analog signal input processing of the relays. One effective way to do this is to utilize the relay metered values directly in SCADA, where they can be compared with other references or state estimator values.

5. Breaker status indication from auxiliary contacts is verified in the same way as in (2). Status indications must be consistent with the flow or absence of current.
6. Continuity of the breaker trip circuit from dc bus through the trip coil is monitored by the relay and reported via communications.
7. Correct operation of the on-off carrier channel is also critical to security of the Protection System, so each carrier set has a connected or integrated automatic checkback test unit. The automatic checkback test runs several times a day. Newer carrier sets with integrated checkback testing check for received signal level and report abnormal channel attenuation or noise, even if the problem is not severe enough to completely disable the channel.

These monitoring activities plus the check-back test comprise automatic verification of all the Protection System elements that experience tells us are the most prone to fail. But, does this comprise a complete verification?

Figure A-2

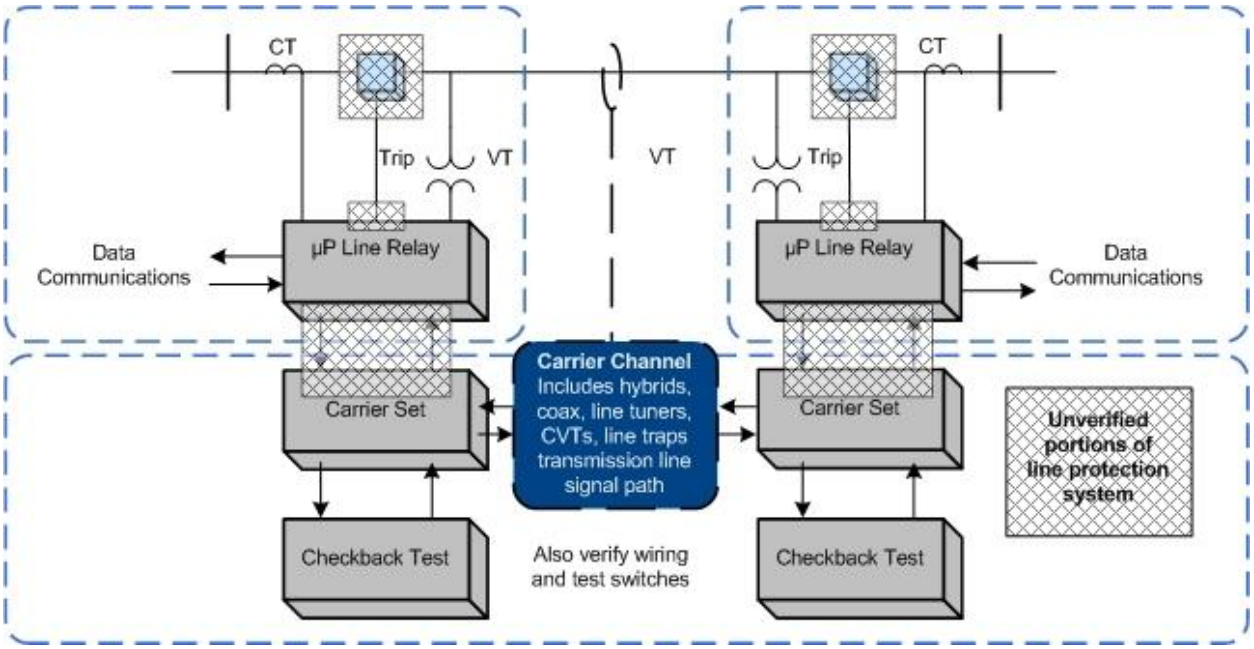

The dotted boxes of Figure A-2 show the sections of verification defined by the monitoring and verification practices just listed. These sections are not completely overlapping, and the shaded regions show elements that are not verified:

1. The continuity of trip coils is verified, but no means is provided for validating the ability of the circuit breaker to trip if the trip coil should be energized.
2. Within each line relay, all the microprocessors that participate in the trip decision have been verified by internal monitoring. However, the trip circuit is actually energized by the

contacts of a small telephone-type "ice cube" relay within the line protective relay. The microprocessor energizes the coil of this ice cube relay through its output data port and a transistor driver circuit. There is no monitoring of the output port, driver circuit, ice cube relay, or contacts of that relay. These components are critical for tripping the circuit breaker for a Fault.

3. The check-back test of the carrier channel does not verify the connections between the relaying microprocessor internal decision programs and the carrier transmitter keying circuit or the carrier receiver output state. These connections include microprocessor I/O ports, electronic driver circuits, wiring, and sometimes telephone-type auxiliary relays.
4. The correct states of breaker and disconnect switch auxiliary contacts are monitored, but this does not confirm that the state change indication is correct when the breaker or switch opens.

A practical solution for (1) and (2) is to observe actual breaker tripping, with a specified maximum time interval between trip tests. Clearing of naturally-occurring Faults are demonstrations of operation that reset the time interval clock for testing of each breaker tripped in this way. If Faults do not occur, manual tripping of the breaker through the relay trip output via data communications to the relay microprocessor meets the requirement for periodic testing.

PRC-005 does not address breaker maintenance, and its Protection System test requirements can be met by energizing the trip circuit in a test mode (breaker disconnected) through the relay microprocessor. This can be done via a front-panel button command to the relay logic, or application of a simulated Fault with a relay test set. However, utilities have found that breakers often show problems during Protection System tests. It is recommended that Protection System verification include periodic testing of the actual tripping of connected circuit breakers.

Testing of the relay-carrier set interface in (3) requires that each relay key its transmitter, and that the other relay demonstrate reception of that blocking carrier. This can be observed from relay or DFR records during naturally occurring Faults, or by a manual test. If the checkback test sequence were incorporated in the relay logic, the carrier sets and carrier channel are then included in the overlapping segments monitored by the two relays, and the monitoring gap is completely eliminated.

Appendix B

Protection System Maintenance Standard Drafting Team

Charles W. Rogers
Chairman
Consumers Energy Co.

John B. Anderson
Xcel Energy

Merle Ashton
Tri-State G&T

Bob Bentert
Florida Power & Light Company

Forrest Brock
Western Farmers Electric Cooperative

Aaron Feathers
Pacific Gas and Electric Company

Sam Francis
Oncor Electric Delivery

Carol Gerou
Midwest Reliability Organization

Russell C. Hardison
Tennessee Valley Authority

David Harper
NRG Texas Maintenance Services

James M. Kinney
FirstEnergy Corporation

Mark Lucas
ComEd

Kristina Marriott
ENOSERV

Al McMeekin
NERC

Michael Palusso
Southern California Edison

Mark Peterson
Great River Energy

John Schecter
American Electric Power

William D. Shultz
Southern Company Generation

Eric A. Udren
Quanta Technology

Scott Vaughan
City of Roseville Electric Department

Matthew Westrich
American Transmission Company

Philip B. Winston
Southern Company Transmission

David Youngblood
Luminant Power

John A. Zipp
ITC Holdings

NERC
NORTH AMERICAN ELECTRIC
RELIABILITY CORPORATION

Supplementary Reference and FAQ - Draft

PRC-005-2 Protection System Maintenance

~~October~~~~September~~~~July~~ 2012

RELIABILITY | ACCOUNTABILITY

3353 Peachtree Road NE
Suite 600, North Tower
Atlanta, GA 30326
404-446-2560 | www.nerc.com

Table of Contents

Table of Contents ..... iii~~ii~~

1. Introduction and Summary ..... 1~~1~~

2. Need for Verifying Protection System Performance ..... 2~~2~~

2.1 Existing NERC Standards for Protection System Maintenance and Testing ..... 2~~2~~

2.2 Protection System Definition ..... 3~~3~~

2.3 Applicability of New Protection System Maintenance Standards ..... 3~~3~~

2.3.1 Frequently Asked Questions: ..... 4~~4~~

2.4.1 Frequently Asked Questions: ..... 7~~6~~

3. Protection Systems Product Generations ..... 9~~8~~

4. Definitions ..... 11~~10~~

4.1 Frequently Asked Questions: ..... 12~~11~~

5. Time-Based Maintenance (TBM) Programs ..... 14~~13~~

5.1 Maintenance Practices ..... 14~~13~~

5.1.1 Frequently Asked Questions: ..... 16~~15~~

5.2 Extending Time-Based Maintenance ..... 17~~16~~

5.2.1 Frequently Asked Questions: ..... 17~~16~~

6. Condition-Based Maintenance (CBM) Programs ..... 19~~18~~

6.1 Frequently Asked Questions: ..... 19~~18~~

7. Time-Based Versus Condition-Based Maintenance ..... 21~~20~~

7.1 Frequently Asked Questions: ..... 21~~20~~

8. Maximum Allowable Verification Intervals ..... 27~~26~~

8.1 Maintenance Tests ..... 27~~26~~

8.1.1 Table of Maximum Allowable Verification Intervals ..... 27~~26~~

8.1.2 Additional Notes for Tables 1-1 through 1-5 and Table 3 ..... 29~~28~~

8.1.3 Frequently Asked Questions: ..... 30~~29~~

8.2 Retention of Records ..... 35~~34~~

8.2.1 Frequently Asked Questions: ..... 35~~34~~

8.3 Basis for Table 1 Intervals ..... 37~~36~~

8.4 Basis for Extended Maintenance Intervals for Microprocessor Relays ..... 38~~37~~

9. Performance-Based Maintenance Process ..... 41~~40~~

9.1 Minimum Sample Size ..... 42~~41~~

9.2 Frequently Asked Questions: ..... 44~~43~~

10. Overlapping the Verification of Sections of the Protection System ..... 55~~54~~

10.1 Frequently Asked Questions: ..... 55~~54~~

11. Monitoring by Analysis of Fault Records ..... 56~~55~~

11.1 Frequently Asked Questions: ..... 57~~56~~

12. Importance of Relay Settings in Maintenance Programs ..... 58~~57~~

12.1 Frequently Asked Questions: ..... 58~~57~~

13. Self-Monitoring Capabilities and Limitations ..... 61~~60~~

13.1 Frequently Asked Questions: ..... 62~~61~~

14. Notification of Protection System Failures ..... 63~~62~~

15. Maintenance Activities ..... 64~~63~~

15.1 Protective Relays (Table 1-1) ..... 64~~63~~

15.1.1 Frequently Asked Questions: ..... 64~~63~~

15.2 Voltage & Current Sensing Devices (Table 1-3) ..... 64~~63~~

15.2.1 Frequently Asked Questions: ..... 66~~65~~

15.3 Control circuitry associated with protective functions (Table 1-5) ..... 67~~66~~

15.3.1 Frequently Asked Questions: ..... 69~~68~~

15.4 Batteries and DC Supplies (Table 1-4) ..... 71~~70~~

15.4.1 Frequently Asked Questions: ..... 71~~70~~

15.5 Associated communications equipment (Table 1-2) ..... 86~~84~~

15.5.1 Frequently Asked Questions: ..... 87~~86~~

15.6 Alarms (Table 2) ..... 90~~89~~

15.6.1 Frequently Asked Questions: ..... 90~~89~~

15.7 Distributed UFLS and Distributed UVLS Systems (Table 3) ..... 91~~90~~

15.7.1 Frequently Asked Questions: ..... 91~~90~~

15.8 Examples of Evidence of Compliance ..... 92~~91~~

15.8.1 Frequently Asked Questions: ..... 92~~91~~

References ..... 94~~93~~

Figures ..... 96~~95~~

Figure 1: Typical Transmission System ..... 96~~95~~

Figure 2: Typical Generation System ..... 97~~96~~

Figure 1 & 2 Legend – components of Protection Systems ..... 98~~97~~

Appendix A ..... 99~~98~~

Appendix B ..... 102~~101~~

Protection System Maintenance Standard Drafting Team ..... 102~~101~~

~~Table of Contents ..... ii~~

~~1. Introduction and Summary ..... 1~~

~~2. Need for Verifying Protection System Performance ..... 2~~

~~2.1 Existing NERC Standards for Protection System Maintenance and Testing ..... 2~~

~~2.2 Protection System Definition ..... 3~~

~~2.3 Applicability of New Protection System Maintenance Standards ..... 3~~

~~2.3.1 Frequently Asked Questions: ..... 4~~

~~6~~

~~6~~

~~8~~

~~10~~

~~11~~

~~5. Maintenance ..... 13~~

~~13~~

~~15~~

~~16~~

~~16~~

~~18~~

~~18~~

~~20~~

~~20~~

~~26~~

~~26~~

~~8.1.1 Table ..... 26~~

~~28~~

~~29~~

~~33~~

~~8.1 ..... 34~~

~~8. Basis for Intervals ..... 36~~

~~Maintenance ..... 37~~

~~40~~

~~41~~

~~43~~

~~54~~

~~54~~

~~55~~

~~56~~

~~57~~

~~57~~

~~60~~

~~61~~

~~62~~

~~63~~

~~15.11 ..... 63~~

~~63~~

~~63~~

~~65~~

~~66~~

~~68~~

~~15.41 ..... 70~~

~~70~~

~~84~~

~~85~~

~~15.6..... 88~~

~~88~~

~~89~~

~~89~~

~~90~~

~~90~~

~~..... 92~~

~~94~~

~~Figure : Typical System..... 94~~

~~Figure 2 ..... 95~~

~~96~~

~~Appendix ..... 97~~

~~100~~

1. Introduction and Summary

Note: This supplementary reference for PRC-005-2 is neither mandatory nor enforceable.

NERC currently has four Reliability Standards that are mandatory and enforceable in the United States and Canada and address various aspects of maintenance and testing of Protection and Control Systems.

These standards are:

PRC-005-1 — Transmission and Generation Protection System Maintenance and Testing

PRC-008-0 — Underfrequency Load Shedding Equipment Maintenance Programs

PRC-011-0 — UVLS System Maintenance and Testing

PRC-017-0 — Special Protection System Maintenance and Testing

While these standards require that applicable entities have a maintenance program for Protection Systems, and that these entities must be able to demonstrate they are carrying out such a program, there are no specifics regarding the technical requirements for Protection System maintenance programs. Furthermore, FERC Order 693 directed additional modifications respective to Protection System maintenance programs. PRC-005-2 combines and replaces PRC-005, PRC-008, PRC-011 and PRC-017.

2. Need for Verifying Protection System Performance

Protective relays have been described as silent sentinels, and do not generally demonstrate their performance until a Fault or other power system problem requires that they operate to protect power system Elements, or even the entire Bulk Electric System (BES). Lacking Faults, switching operations or system problems, the Protection Systems may not operate, beyond static operation, for extended periods. A Misoperation - a false operation of a Protection System or a failure of the Protection System to operate, as designed, when needed - can result in equipment damage, personnel hazards, and wide-area Disturbances or unnecessary customer outages. Maintenance or testing programs are used to determine the performance and availability of Protection Systems.

Typically, utilities have tested Protection Systems at fixed time intervals, unless they had some incidental evidence that a particular Protection System was not behaving as expected. Testing practices vary widely across the industry. Testing has included system functionality, calibration of measuring devices, and correctness of settings. Typically, a Protection System must be visited at its installation site and, in many cases, removed from service for this testing.

Fundamentally, a Reliability Standard for Protection System Maintenance and Testing requires the performance of the maintenance activities that are necessary to detect and correct plausible age and service related degradation of the Protection System components, such that a properly built and commissioned Protection System will continue to function as designed over its service life.

Similarly station batteries, which are an important part of the station dc supply, are not called upon to provide instantaneous dc power to the Protection System until power is required by the Protection System to operate circuit breakers or interrupting devices to clear Faults or to isolate equipment.

2.1 Existing NERC Standards for Protection System Maintenance and Testing

For critical BES protection functions, NERC standards have required that each utility or asset owner define a testing program. The starting point is the existing Standard PRC-005, briefly restated as follows:

Purpose: To document and implement programs for the maintenance of all Protection Systems affecting the reliability of the Bulk Electric System (BES) so that these Protection Systems are kept in working order.

PRC-005-1 is not specific on where the boundaries of the Protection Systems lie. However, the definition of Protection System in the NERC Glossary of Terms used in Reliability Standards indicates what must be included as a minimum.

At the beginning of the project to develop PRC-005-2, the definition of Protection System was:

Protective relays, associated communications Systems, voltage and current sensing devices, station batteries and dc control circuitry.

Applicability: Owners of generation and transmission Protection Systems.

Requirements: The owner shall have a documented maintenance program with test intervals. The owner must keep records showing that the maintenance was performed at the specified intervals.

2.2 Protection System Definition

The most recently approved definition of Protection Systems is:

- Protective relays which respond to electrical quantities,
- Communications systems necessary for correct operation of protective functions,
- Voltage and current sensing devices providing inputs to protective relays,
- Station dc supply associated with protective functions (including station batteries, battery chargers, and non-battery-based dc supply), and
- Control circuitry associated with protective functions through the trip coil(s) of the circuit breakers or other interrupting devices.

2.3 Applicability of New Protection System Maintenance Standards

The BES purpose is to transfer bulk power. The applicability language has been changed from the original PRC-005:

"...affecting the reliability of the Bulk Electric System (BES)…"

To the present language:

"…that are installed for the purpose of detecting Faults on BES Elements (lines, buses, transformers, etc.)."

The drafting team intends that this standard will follow with any definition of the Bulk Electric System. There should be no ambiguity; if the Element is a BES Element, then the Protection System protecting that Element should then be included within this standard. If there is regional variation to the definition, then there will be a corresponding regional variation to the Protection Systems that fall under this standard.

There is no way for the Standard Drafting Team to know whether a specific 230KV line, 115KV line (even 69KV line), for example, should be included or excluded. Therefore, the team set the clear intent that the standard language should simply be applicable to Protection Systems for BES Elements.

The BES is a NERC defined term that, from time to time, may undergo revisions. Additionally, there may even be regional variations that are allowed in the present and future definitions. See the NERC Glossary of Terms for the present, in-force definition. See the applicable Regional Reliability Organization for any applicable allowed variations.

While this standard will undergo revisions in the future, this standard will not attempt to keep up with revisions to the NERC definition of BES, but, rather, simply make BES Protection Systems applicable.

The Standard is applied to Generator Owners (GO) and Transmission Owners (TO) because GOs and TOs have equipment that is BES equipment. The standard brings in Distribution Providers (DP) because, depending on the station configuration of a particular substation, there may be Protection System equipment installed at a non-transmission voltage level (Distribution

Provider equipment) that is wholly or partially installed to protect the BES. PRC-005-2 would apply to this equipment. An example is underfrequency load-shedding, which is frequently applied well down into the distribution system to meet PRC-007-0.

As this standard is intended to replace the existing PRC-005, PRC-008, PRC-011 and PRC-017, those standards are used in the construction of this revision of PRC-005-1. Much of the original intent of those standards was carried forward whenever it was possible to continue the intent without a disagreement with FERC Order 693. For example, the original PRC-008 was constructed quite differently than the original PRC-005. The drafting team agrees with the intent of this and notes that distributed tripping schemes would have to exhibit multiple failures to trip before they would prove to be significant, as opposed to a single failure to trip of, for example, a transmission Protection System Bus Differential lock-out relay. While many failures of these distribution breakers could add up to be significant, it is also believed that distribution breakers are operated often on just Fault clearing duty; and, therefore, the distribution circuit breakers are operated at least as frequently as stipulated in any requirement in this standard.

Additionally, since this standard will now replace PRC-011, it will be important to make the distinction between under-voltage Protection Systems that protect individual Loads and Protection Systems that are UVLS schemes that protect the BES. Any UVLS scheme that had been applicable under PRC-011 will now be applicable under this revision of PRC-005-1. An example of an under-voltage load-shedding scheme that is not applicable to this standard is one in which the tripping action was intended to prevent low distribution voltage to a specific Load from a Transmission system that was intact except for the line that was out of service, as opposed to preventing a Cascading outage or Transmission system collapse.

It had been correctly noted that the devices needed for PRC-011 are the very same types of devices needed in PRC-005.

Thus, a standard written for Protection Systems of the BES can easily make the needed requirements for Protection Systems, and replace some other standards at the same time.

2.3.1 Frequently Asked Questions:

What exactly is the BES, or Bulk Electric System?

BES is the abbreviation for Bulk Electric System. BES is a term in the Glossary of Terms used in Reliability Standards, and is not being modified within this draft standard.
NERC's approved definition of Bulk Electric System is:

As defined by the Regional Reliability Organization, the electrical generation resources, transmission lines, Interconnections with neighboring Systems, and associated equipment, generally operated at voltages of 100 kV or higher. Radial transmission Facilities serving only Load with one transmission source are generally not included in this definition.

The BES definition is presently undergoing the process of revision.

Each regional entity implements a definition of the Bulk Electric System that is based on this NERC definition; in some cases, supplemented by additional criteria. These regional definitions have been documented and provided to FERC as part of a *June 14, 2007 Informational Filing*.

Why is Distribution Provider included within the Applicable Entities and as a responsible entity within several of the requirements? Wouldn't anyone having relevant Facilities be a Transmission Owner?

Depending on the station configuration of a particular substation, there may be Protection System equipment installed at a non-transmission voltage level (Distribution Provider equipment) that is wholly or partially installed to protect the BES. PRC-005-2 would apply to this equipment. An example is underfrequency load-shedding, which is frequently applied well down into the distribution system to meet PRC-007-0.

We have an under voltage load-shedding (UVLS) system in place that prevents one of our distribution substations from supplying extremely low voltage in the case of a specific transmission line outage. The transmission line is part of the BES. Does this mean that our UVLS system falls within this standard?

The situation, as stated, indicates that the tripping action was intended to prevent low distribution voltage to a specific Load from a Transmission System that was intact, except for the line that was out of service, as opposed to preventing Cascading outage or Transmission System Collapse~~system collapse~~.

This standard is not applicable to this UVLS.

We have a UFLS or UVLS scheme that sheds the necessary Load through distribution-side circuit breakers and circuit reclosers. Do the trip-test requirements for circuit breakers apply to our situation?

No. Distributed tripping schemes would have to exhibit multiple failures to trip before they would prove to be significant, as opposed to a single failure to trip of, for example, a transmission Protection System bus differential~~Bus Differential~~ lock-out relay. While many failures of these distribution breakers could add up to be significant, it is also believed that distribution breakers are operated often on just Fault clearing duty; and, therefore, the distribution circuit breakers are operated at least as frequently as any requirements that might have appeared in this standard.

We have a UFLS scheme that, in some locales, sheds the necessary Load through non-BES circuit breakers and, occasionally, even circuit switchers. Do the trip-test requirements for circuit breakers apply to our situation?

If your "non-BES circuit breaker" has been brought into this standard by the inclusion of UFLS requirements, and otherwise would not have been brought into this standard, then the answer is that there are no trip-test requirements. For these devices that are otherwise non-BES assets, these tripping schemes would have to exhibit multiple failures to trip before they would prove to be as significant as, for example, a single failure to trip of a transmission~~Transmission~~ Protection System bus differential~~Bus Differential~~ lock-out relay.

How does the "Facilities" section of "Applicability" track with the standards that will be retired once PRC-005-2 becomes effective?

In establishing PRC-005-2, the drafting team has combined legacy standards PRC-005-1, PRC-008-0, PRC-011-0, and PRC-017-0. The merger of the subject matter of these standards is reflected in Applicability 4.2.

The intent of the drafting team is that the legacy standards be reflected in PRC-005-2 as follows:

- Applicability of PRC-005-1 for Protection Systems relating to non-generator elements of the BES is addressed in 4.2.1;
- Applicability of PRC-008-0 for underfrequency load shedding systems is addressed in 4.2.2;
- Applicability of PRC-011-0 for undervoltage load shedding relays is addressed in 4.2.3;
- Applicability of PRC-017-0 for Special Protection Systems is addressed in 4.2.4;
- Applicability of PRC-005-1 for Protection Systems for BES generators is addressed in 4.2.5.

2.4 Applicable Relays

The NERC Glossary definition has a Protection System including relays, dc supply, current and voltage sensing devices, dc control circuitry and associated communications circuits. The relays to which this standard applies are those protective relays that respond to electrical quantities and provide a trip output to trip coils, dc control circuitry or associated communications equipment. This definition extends to IEEE Device No. 86 (lockout relay) and IEEE Device No. 94 (tripping or trip-free relay), as these devices are tripping relays that respond to the trip signal of the protective relay that processed the signals from the current and voltage-sensing devices.

Relays that respond to non-electrical inputs or impulses (such as, but not limited to, vibration, pressure, seismic, thermal or gas accumulation) are not included.

2.4.1 Frequently Asked Questions:

Are power circuit reclosers, reclosing relays, closing circuits and auto-restoration schemes covered in this Standard?

No. This standard covers protective relays that use electrical quantity measurements to determine anomalies and to trip a portion of the BES. Reclosers, reclosing relays, closing circuits and auto-restoration schemes are used to cause devices to close, as opposed to electrical-measurement relays and their associated circuits that cause circuit interruption from the BES; such closing devices and schemes are more appropriately covered under other NERC standards. There is one notable exception: Since PRC-017 will be superseded by PRC-005-2, then if a Special Protection System (previously covered by PRC-017) incorporates automatic closing of breakers, then the SPS-related closing devices must be tested accordingly.

I use my protective relays only as sources of metered quantities and breaker status for SCADA and EMS through a substation distributed RTU or data concentrator to the control center. What are the maintenance requirements for the relays?

This standard addresses Protection Systems that are installed for the purpose of detecting Faults on BES Elements (lines, buses, transformers, etc.). Protective relays, providing only the functions mentioned in the question, are not included.

Are Reverse Power Relays installed on the low-voltage side of distribution banks considered to be components of "Protection Systems that are installed for the purpose of detecting Faults on BES Elements (lines, buses, transformers, etc.)"?

Reverse power relays are often installed to detect situations where the transmission source becomes deenergized and the distribution bank remains energized from a source on the low-voltage side of the transformer and the settings are calculated based on the charging current of the transformer from the low-voltage side. Although these relays may operate as a result of a fault on a BES element, they are not 'installed for the purpose of detecting' these faults.

Is a Sudden Pressure Relay an auxiliary tripping relay?

No. IEEE C37.2-2008 assigns the Device No.# 94 to auxiliary tripping relays. Sudden pressure relays are assigned Device No.# 63. Sudden pressure relays are presently excluded from the standard because it does not utilize voltage and/or current measurements to determine anomalies. Devices that use anything other than electrical detection means are excluded. The trip path from a sudden pressure device is a part of the Protection System control circuitry. The sensing element is omitted from PRC-005-2 testing requirements because the SDT is unaware of industry-recognized testing protocol for the sensing elements. The SDT believes that

Protection Systems that trip (or can trip) the BES should be included. This position is consistent with the currently-approved PRC-005-1a, consistent with the SAR for Project 2007-17, and understands this to be consistent with the position of FERC staff.

My mechanical device does not operate electrically and does not have calibration settings; what maintenance activities apply?

You must conduct a test(s) to verify the integrity of any trip circuit that is a part of a Protection System. This standard does not cover circuit breaker maintenance or transformer maintenance. The standard also does not presently cover testing of devices, such as sudden pressure relays (63), temperature relays (49), and other relays which respond to mechanical parameters, rather than electrical parameters. There is an expectation that Fault pressure relays and other non-electrically initiated devices may become part of some maintenance standard. This standard presently covers trip paths. It might seem incongruous to test a trip path without a present requirement to test the device; and, thus, be arguably more work for nothing. But one simple test to verify the integrity of such a trip path could be (but is not limited to) a voltage presence test, as a dc voltage monitor might do if it were installed monitoring that same circuit.

The standard specifically mentions auxiliary and lock-out relays. What is an auxiliary tripping relay?

An auxiliary relay, IEEE Device No.# 94, is described in IEEE Standard C37.2-2008 as: "A device that functions to trip a circuit breaker, contactor, or equipment; to permit immediate tripping by other devices; or to prevent immediate reclosing of a circuit interrupter if it should open automatically, even though its closing circuit is maintained closed."

What is a lock-out relay?

A lock-out relay, IEEE Device No.# 86, is described in IEEE Standard C37.2 as: "A device that trips and maintains the associated equipment or devices inoperative until it is reset by an operator, either locally or remotely."

3. Protection Systems Product Generations

The likelihood of failure and the ability to observe the operational state of a critical Protection System both depends on the technological generation of the relays, as well as how long they have been in service. Unlike many other transmission asset groups, protection and control systems~~Systems~~ have seen dramatic technological changes spanning several generations. During the past 20 years, major functional advances are primarily due to the introduction of microprocessor technology for power system devices, such as primary measuring relays, monitoring devices, control Systems, and telecommunications equipment.

Modern microprocessor-based relays have six significant traits that impact a maintenance strategy:

- Self monitoring capability - the processors can check themselves, peripheral circuits, and some connected substation inputs and outputs, such as trip coil continuity. Most relay users are aware that these relays have self monitoring, but are not focusing on exactly what internal functions are actually being monitored. As explained further below, every element critical to the Protection System must be monitored, or else verified periodically.
- Ability to capture Fault records showing how the Protection System responded to a Fault in its zone of protection, or to a nearby Fault for which it is required not to operate.
- Ability to meter currents and voltages, as well as status of connected circuit breakers, continuously during non-Fault times. The relays can compute values, such as MW and MVAR line flows, that are sometimes used for operational purposes, such as SCADA.
- Data communications via ports that provide remote access to all of the results of Protection System monitoring, recording and measurement.
- Ability to trip or close circuit breakers and switches through the Protection System outputs, on command from remote data communications messages, or from relay front panel button requests.
- Construction from electronic components, some of which have shorter technical life or service life than electromechanical components of prior Protection System generations.

There have been significant advances in the technology behind the other components of Protection Systems. Microprocessors are now a part of battery chargers, associated communications equipment, voltage and current-measuring devices, and even the control circuitry (in the form of software-latches replacing lock-out relays, etc.).

Any Protection System component can have self-monitoring and alarming capability, not just relays. Because of this technology, extended time intervals can find their way into all components of the Protection System.

This standard also recognizes the distinct advantage of using advanced technology to justifiably defer or even eliminate traditional maintenance. Just as a hand-held calculator does not require routine testing and calibration, neither does a calculation buried in a microprocessor-based device that results in a “lock-out.” Thus, the software-latch 86 that replaces an electro-

mechanical 86 does not require routine trip testing. Any trip circuitry associated with the "soft 86" would still need applicable verification activities performed, but the actual "86" does not have to be "electrically operated" or even toggled.

4. Definitions

Protection System Maintenance Program (PSMP) — An ongoing program by which Protection System components are kept in working order and proper operation of malfunctioning components is restored. A maintenance program for a specific component includes one or more of the following activities:

- Verify — Determine that the component is functioning correctly.
- Monitor — Observe the routine in-service operation of the component.
- Test — Apply signals to a component to observe functional performance or output behavior, or to diagnose problems.
- Inspect — Detect visible signs of component failure, reduced performance and degradation.
- Calibrate — Adjust the operating threshold or measurement accuracy of a measuring element to meet the intended performance requirement.
- Unresolved Maintenance Issue – A deficiency identified during a maintenance activity that causes the component to not meet the intended performance, cannot be corrected during the maintenance interval,and requires follow-up corrective action.
- Segment – Protection Systems or components of a consistent design standard, or a particular model or type from a single manufacturer that typically share other common elements. Consistent performance is expected across the entire population of a Segment. A Segment must contain at least sixty (60) individual components.
- Component Type - Any one of the five specific elements of the Protection System definition.
- Component – A Component is any individual discrete piece of equipment included in a Protection System, including but not limited to a protective relay or current sensing device. The designation of what constitutes a control circuit Component is dependent upon how an entity performs and tracks the testing of the control circuitry. Some entities test their control circuits on a breaker basis whereas others test their circuitry on a local zone of protection basis. Thus, entities are allowed the latitude to designate their own definitions of control circuit Components. Another example of where the entity has some discretion on determining what constitutes a single Component is the voltage and current sensing devices, where the entity may choose either to designate a full three-phase set of such devices or a single device as a single Component.*
- Countable Event – A failure of a Component requiring repair or replacement, any condition discovered during the maintenance activities in Tables 1-1 through 1-5 and Table 3 which requires corrective action or a Misoperation attributed to hardware failure or calibration failure. Misoperations due to productdesign errors, software errors, relay settings different from specified settings, Protection SystemComponent configuration errors, or Protection System application errors are not included in Countable Events.

4.1 Frequently Asked Questions:

Why does PRC-005-2 not specifically require maintenance and testing procedures, as reflected in the previous standard, PRC-005-1?

PRC-005-1 does not require detailed maintenance and testing procedures, but instead requires summaries of such procedures, and is not clear on what is actually required. PRC-005-2 requires a documented maintenance program, and is focused on establishing requirements rather than prescribing methodology to meet those requirements. Between the activities identified in the Tables 1-1 through 1-5, Table 2 and Table 3 (collectively the "Tables"), and the various components of the definition established for a "Protection System Maintenance Program," PRC-005-2 establishes the activities and time basis for a Protection System Maintenance Program to a level of detail not previously required.

Please clarify what is meant by "restore" in the definition of maintenance.

The description of "restore" in the definition of a Protection System Maintenance Program addresses corrective activities necessary to assure that the component is returned to working order following the discovery of its failure or malfunction. The Maintenance Activities specified in the Tables do not present any requirements related to Restoration; R5 of the standard does require that the entity "shall demonstrate efforts to correct any identified Unresolved Maintenance Issues." Some examples of restoration (or correction of Unresolved Maintenance Issues) include, but are not limited to, replacement of capacitors in distance relays to bring them to working order; replacement of relays, or other Protection System components, to bring the Protection System to working order; upgrade of electromechanical or solid-state protective relays to microprocessor-based relays following the discovery of failed components. Restoration, as used in this context, is not to be confused with restoration rules as used in system operations. Maintenance activity necessarily includes both the detection of problems and the repairs needed to eliminate those problems. This standard does not identify all of the Protection System problems that must be detected and eliminated, rather it is the intent of this standard that an entity determines the necessary working order for their various devices, and keeps them in working order. If an equipment item is repaired or replaced, then the entity can restart the maintenance-time-interval-clock, if desired; however, the replacement of equipment does not remove any documentation requirements that would have been required to verify compliance with time-interval requirements. In other words, do not discard maintenance data that goes to verify your work.

The retention of documentation for new and/or replaced equipment is all about proving that the maintenance intervals had been in compliance. For example, a long-range plan of upgrades might lead an entity to ignore required maintenance; retaining the evidence of prior maintenance that existed before any retirements and upgrades proves compliance with the standard.

Please clarify what is meant by "…demonstrate efforts to correct an Unresolved Maintenance Issue…"; why not measure the completion of the corrective action?

Management of completion of the identified Unresolved Maintenance Issue is a complex topic that falls outside of the scope of this standard. There can be any number of supply, process and management problems that make setting repair deadlines impossible. The SDT specifically chose the phrase "demonstrate efforts to correct" (with guidance from NERC Staff) because of the concern that many more complex Unresolved Maintenance Issues might require greater

than the remaining maintenance interval to resolve (and yet still be a "closed-end process"). For example, a problem might be identified on a VRLA battery during a six-month check. In instances such as one that requiring battery replacement as part of the long-term resolution, it is highly unlikely that the battery could be replaced in time to meet the six-calendar-month requirement for this maintenance activity. The SDT does not believe entities should be found in violation of a maintenance program requirement because of the inability to complete a remediation program within the original maintenance interval. The SDT does believe corrective actions should be timely, but concludes it would be impossible to postulate all possible remediation projects; and, therefore, impossible to specify bounding time frames for resolution of all possible Unresolved Maintenance Issues, or what documentation might be sufficient to provide proof that effective corrective action is being undertaken.

5. Time-Based Maintenance (TBM) Programs

Time-based maintenance is the process in which Protection Systems are maintained or verified according to a time schedule. The scheduled program often calls for technicians to travel to the physical site and perform a functional test on Protection System components. However, some components of a TBM program may be conducted from a remote location - for example, tripping a circuit breaker by communicating a trip command to a microprocessor relay to determine if the entire Protection System tripping chain is able to operate the breaker. Similarly, all Protection System components can have the ability to remotely conduct tests, either on-command or routinely; the running of these tests can extend the time interval between hands-on maintenance activities.

5.1 Maintenance Practices

Maintenance and testing programs often incorporate the following types of maintenance practices:

- TBM – time-based maintenance – externally prescribed maximum maintenance or testing intervals are applied for components or groups of components. The intervals may have been developed from prior experience or manufacturers' recommendations. The TBM verification interval is based on a variety of factors, including experience of the particular asset owner, collective experiences of several asset owners who are members of a country or regional council, etc. The maintenance intervals are fixed and may range in number of months or in years.

  TBM can include review of recent power system events near the particular terminal. Operating records may verify that some portion of the Protection System has operated correctly since the last test occurred. If specific protection scheme components have demonstrated correct performance within specifications, the maintenance test time clock can be reset for those components.

- PBM – Performance-Based Maintenance - intervals are established based on analytical or historical results of TBM failure rates on a statistically significant population of similar components. Some level of TBM is generally followed. Statistical analyses accompanied by adjustments to maintenance intervals are used to justify continued use of PBM-developed extended intervals when test failures or in-service failures occur infrequently.

- CBM – condition-based maintenance – continuously or frequently reported results from non-disruptive self-monitoring of components demonstrate operational status as those components remain in service. Whatever is verified by CBM does not require manual testing, but taking advantage of this requires precise technical focus on exactly what parts are included as part of the self-diagnostics. While the term "Condition-Based-Maintenance" (CBM) is no longer used within the standard itself, it is important to note that the concepts of CBM are a part of the standard (in the form of extended time intervals through status-monitoring). These extended time intervals are only allowed (in the absence of PBM) if the condition of the device is monitored (CBM). As a consequence of the "monitored-basis-time-intervals" existing within the standard, the explanatory discussions within this Supplementary Reference concerned with CBM will remain in this reference and are discussed as CBM.

Microprocessor-based Protection System components that perform continuous self-monitoring verify correct operation of most components within the device. Self-monitoring capabilities may include battery continuity, float voltages, unintentional grounds, the ac signal inputs to a relay, analog measuring circuits, processors and memory for measurement, protection, and data communications, trip circuit monitoring, and protection or data communications signals (and many, many more measurements). For those conditions, failure of a self-monitoring routine generates an alarm and may inhibit operation to avoid false trips. When internal components, such as critical output relay contacts, are not equipped with self-monitoring, they can be manually tested. The method of testing may be local or remote, or through inherent performance of the scheme during a system event.

The TBM is the overarching maintenance process of which the other types are subsets. Unlike TBM, PBM intervals are adjusted based on good or bad experiences. The CBM verification intervals can be hours, or even milliseconds between non-disruptive self-monitoring checks within or around components as they remain in service.

TBM, PBM, and CBM can be combined for individual components, or within a complete Protection System. The following diagram illustrates the relationship between various types of maintenance practices described in this section. In the Venn diagram, the overlapping regions show the relationship of TBM with PBM historical information and the inherent continuous monitoring offered through CBM.

This figure shows:

- Region 1: The TBM intervals that are increased based on known reported operational condition of individual components that are monitoring themselves.
- Region 2: The TBM intervals that are adjusted up or down based on results of analysis of maintenance history of statistically significant population of similar products that have been subject to TBM.
- Region 3: Optimal TBM intervals based on regions 1 and 2.

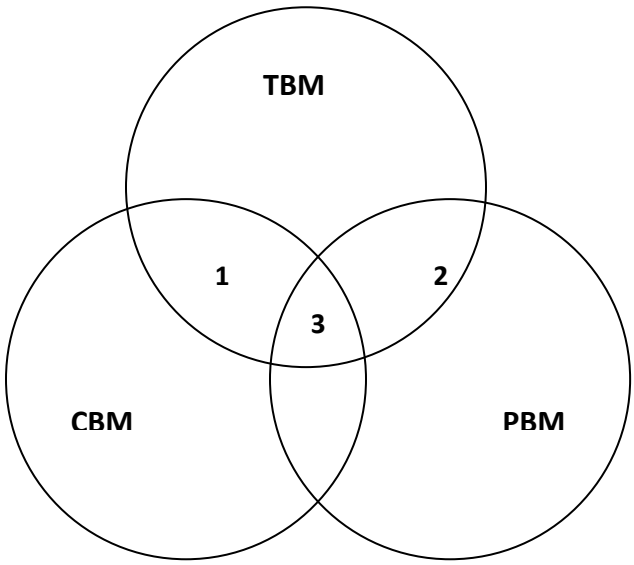

Relationship of time-based maintenance types

5.1.1 Frequently Asked Questions:

The standard seems very complicated, and is difficult to understand. Can it be simplified?

Because the standard is establishing parameters for condition-based Maintenance (R1) and Performance-Based Maintenance (R2), in addition to simple time-based Maintenance, it does appear to be complicated. At its simplest, an entity needs to ONLY perform time-based maintenance according to the unmonitored rows of the Tables. If an entity then wishes to take advantage of monitoring on its Protection System components and its available lengthened time intervals, then it may, as long as the component has the listed monitoring attributes. If an entity wishes to use historical performance of its Protection System components to perform Performance-Based Maintenance, then R2 applies.

Please see the following diagram, which provides a "flow chart" of the standard.

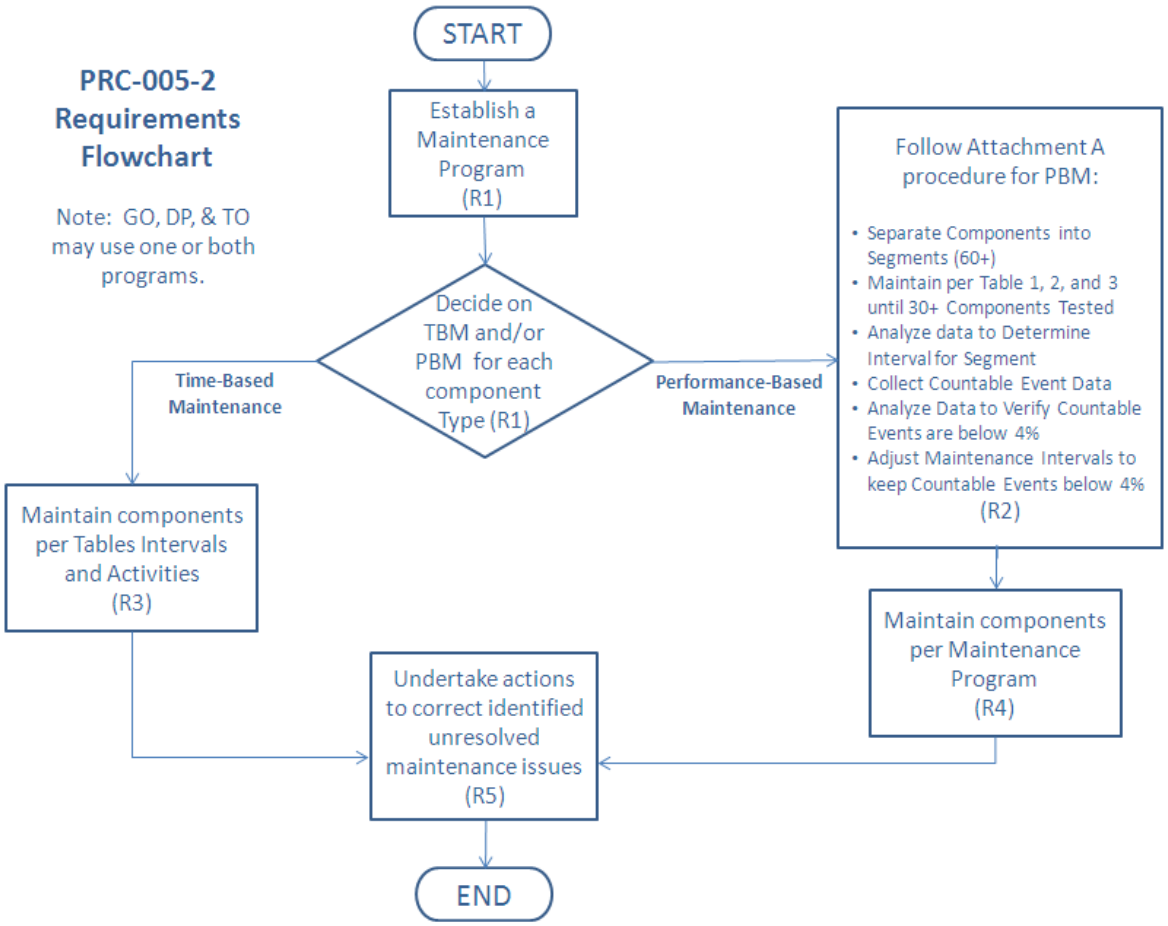

We have an electromechanical (unmonitored) relay that has a trip output to a lockout relay (unmonitored) which trips our transformer off-line by tripping the transformer's high-side and low-side circuit breakers. What testing must be done for this system?

This system is made up of components that are all unmonitored. Assuming a time-based Protection System maintenance program schedule (as opposed to a Performance-Based

maintenance program), each component must be maintained per the most frequent hands-on activities listed in the Tables.

5.2 Extending Time-Based Maintenance

All maintenance is fundamentally time-based. Default time-based intervals are commonly established to assure proper functioning of each component of the Protection System, when data on the reliability of the components is not available other than observations from time-based maintenance. The following factors may influence the established default intervals:

- If continuous indication of the functional condition of a component is available (from relays or chargers or any self-monitoring device), then the intervals may be extended, or manual testing may be eliminated. This is referred to as condition-based maintenance or CBM. CBM is valid only for precisely the components subject to monitoring. In the case of microprocessor-based relays, self-monitoring may not include automated diagnostics of every component within a microprocessor.
- Previous maintenance history for a group of components of a common type may indicate that the maintenance intervals can be extended, while still achieving the desired level of performance. This is referred to as Performance-Based Maintenance, or PBM. It is also sometimes referred to as reliability-centered maintenance, or RCM; but PBM is used in this document.
- Observed proper operation of a component may be regarded as a maintenance verification of the respective component or element in a microprocessor-based device. For such an observation, the maintenance interval may be reset only to the degree that can be verified by data available on the operation. For example, the trip of an electromechanical relay for a Fault verifies the trip contact and trip path, but only through the relays in series that actually operated; one operation of this relay cannot verify correct calibration.

Excessive maintenance can actually decrease the reliability of the component or system. It is not unusual to cause failure of a component by removing it from service and restoring it. The improper application of test signals may cause failure of a component. For example, in electromechanical overcurrent relays, test currents have been known to destroy convolution springs.

In addition, maintenance usually takes the component out of service, during which time it is not able to perform its function. Cutout switch failures, or failure to restore switch position, commonly lead to protection failures.

5.2.1 Frequently Asked Questions:

If I show the protective device out of service while it is being repaired, then can I add it back as a new protective device when it returns? If not, my relay testing history would show that I was out of compliance for the last maintenance cycle.

The maintenance and testing requirements (R5) (in essence) state "…shall demonstrate efforts to correct any identified Unresolved Maintenance Issues." The type of corrective activity is not stated; however it could include repairs or replacements.

Your documentation requirements will increase, of course, to demonstrate that your device tested bad and had corrective actions initiated. Your regional entity could very well ask for documentation showing status of your corrective actions.

6. Condition-Based Maintenance (CBM) Programs

Condition-based maintenance is the process of gathering and monitoring the information available from modern microprocessor-based relays and other intelligent electronic devices (IEDs) that monitor Protection System elements. These devices generate monitoring information during normal operation, and the information can be assessed at a convenient location remote from the substation. The information from these relays and IEDs is divided into two basic types:

1. Information can come from background self-monitoring processes, programmed by the manufacturer, or by the user in device logic settings. The results are presented by alarm contacts or points, front panel indications, and by data communications messages.
2. Information can come from event logs, captured files, and/or oscillographic records for Faults and Disturbances, metered values, and binary input status reports. Some of these are available on the device front panel display, but may be available via data communications ports. Large files of Fault information can only be retrieved via data communications. These results comprise a mass of data that must be further analyzed for evidence of the operational condition of the Protection System.

Using these two types of information, the user can develop an effective maintenance program carried out mostly from a central location remote from the substation. This approach offers the following advantages:

Non-invasive Maintenance: The system is kept in its normal operating state, without human intervention for checking. This reduces risk of damage, or risk of leaving the system in an inoperable state after a manual test. Experience has shown that keeping human hands away from equipment known to be working correctly enhances reliability.

Virtually Continuous Monitoring: CBM will report many hardware failure problems for repair within seconds or minutes of when they happen. This reduces the percentage of problems that are discovered through incorrect relaying performance. By contrast, a hardware failure discovered by TBM may have been there for much of the time interval between tests, and there is a good chance that some devices will show health problems by incorrect operation before being caught in the next test round. The frequent or continuous nature of CBM makes the effective verification interval far shorter than any required TBM maximum interval. To use the extended time intervals available through Condition Based Maintenance, simply look for the rows in the Tables that refer to monitored items.

6.1 Frequently Asked Questions:

My microprocessor relays and dc circuit alarms are contained on relay panels in a 24-hour attended control room. Does this qualify as an extended time interval condition-based (monitored) system?

Yes, provided the station attendant (plant operator, etc.) monitors the alarms and other indications (comparable to the monitoring attributes) and reports them within the given time limits that are stated in the criteria of the Tables.

When documenting the basis for inclusion of components into the appropriate levels of monitoring, as per Requirement R1 (Part 1.4) of the standard, is it necessary to provide this documentation about the device by listing of every component and the specific monitoring attributes of each device?

No. While maintaining this documentation on the device level would certainly be permissible, it is not necessary. Global statements can be made to document appropriate levels of monitoring for the entire population of a component type or portion thereof.

For example, it would be permissible to document the conclusion that all BES substation dc supply battery chargers are monitored by stating the following within the program description:

> "All substation dc supply battery chargers are considered monitored and subject to the rows for monitored equipment of Table 1-4 requirements, as all substation dc supply battery chargers are equipped with dc voltage alarms and ground detection alarms that are sent to the manned control center."

Similarly, it would be acceptable to use a combination of a global statement and a device-level list of exclusions. Example:

> "Except as noted below, all substation dc supply battery chargers are considered monitored and subject to the rows for monitored equipment of Table 1-4 requirements, as all substation dc supply battery chargers are equipped with dc voltage alarms and ground detection alarms that are sent to the manned control center. The dc supply battery chargers of Substation X, Substation Y, and Substation Z are considered unmonitored and subject to the rows for unmonitored equipment in Table 1-4 requirements, as they are not equipped with ground detection capability."

Regardless whether this documentation is provided by device listing of monitoring attributes, by global statements of the monitoring attributes of an entire population of component types, or by some combination of these methods, it should be noted that auditors may request supporting drawings or other documentation necessary to validate the inclusion of the device(s) within the appropriate level of monitoring. This supporting background information need not be maintained within the program document structure, but should be retrievable if requested by an auditor.

7. Time-Based Versus Condition-Based Maintenance

Time-based and condition-based (or monitored) maintenance programs are both acceptable, if implemented according to technically sound requirements. Practical programs can employ a *combination of time-based and condition-based maintenance.* The standard requirements introduce the concept of optionally using condition monitoring as a documented element of a maintenance program.

The Federal Energy Regulatory Commission (FERC), in its Order Number 693 Final Rule, dated March 16, 2007 (18 CFR Part 40, Docket No. RM06-16-000) on Mandatory Reliability Standards for the Bulk-Power System, directed NERC to submit a modification to PRC-005-1 that includes a requirement that maintenance and testing of a Protection System must be carried out within a maximum allowable interval that is appropriate to the type of the Protection System and its impact on the reliability of the Bulk Power System. Accordingly, this Supplementary Reference Paper refers to the specific maximum allowable intervals in PRC-005-2. The defined time limits allow for longer time intervals if the maintained component is monitored.

A key feature of condition-based monitoring is that it effectively reduces the time delay between the moment of a protection failure and time the Protection System owner knows about it, for the monitored segments of the Protection System. In some cases, the verification is practically continuous - the time interval between verifications is minutes or seconds. Thus, technically sound, condition-based verification, meets the verification requirements of the FERC order even more effectively than the strictly time-based tests of the same system components.

The result is that:

This NERC standard permits utilities to use a technically sound approach and to take advantage of remote monitoring, data analysis, and control capabilities of modern Protection Systems to reduce the need for periodic site visits and invasive testing of components by on-site technicians. This periodic testing must be conducted within the maximum time intervals specified in Tables 1-1 through 1-5 and Table 2 of PRC-005-2.

7.1 Frequently Asked Questions:

What is a Calendar Year?

Calendar Year - January 1 through December 31 of any year. As an example, if an event occurred on June 17, 2009 and is on a “One Calendar Year Interval,” the next event would have to occur on or before December 31, 2010.

Please provide an example of “4 Calendar Months”.

If a maintenance activity is described as being needed every four Calendar Months then it is performed in a (given) month and due again four months later. For example a battery bank is inspected in month number 1 then it is due again before the end of the month number5. And specifically consider that you perform your battery inspection on January 3, 2010 then it must be inspected again before the end of May. Another example could be that a four-month inspection was performed in January is due in May, but if performed in March (instead of May)

would still be due four months later therefore the activity is due again July. Basically every "four Calendar Months" means to add four months from the last time the activity was performed.

Please provide an example of the unmonitored versus other levels of monitoring available?

An unmonitored Protection System has no monitoring and alarm circuits on the Protection System components. A Protection System component that has monitoring attributes but no alarm output connected is considered to be unmonitored.

A monitored Protection System or an individual monitored component of a Protection System has monitoring and alarm circuits on the Protection System components. The alarm circuits must alert, within 24 hours, a location wherein corrective action can be initiated. This location might be, but is not limited to, an Operations Center, Dispatch Office, Maintenance Center or even a portable SCADA system.

There can be a combination of monitored and unmonitored Protection Systems within any given scheme, substation or plant; there can also be a combination of monitored and unmonitored components within any given Protection System.

Example #1: A combination of monitored and unmonitored components within a given Protection System might be:

- A microprocessor relay with an internal alarm connected to SCADA to alert 24-hr staffed operations center; it has internal self diagnosis and alarming. (monitored)
- Instrumentation transformers, with no monitoring, connected as inputs to that relay. (unmonitored)
- A vented Lead-Acid battery with a low voltage alarm for the station dc supply voltage and an unintentional grounds detection alarm connected to SCADA. (monitoring varies)
- A circuit breaker with a trip coil, and the trip circuit is not monitored. (unmonitored)

Given the particular components and conditions, and using Table 1 and Table 2, the particular components have maximum activity intervals of:

Every four calendar months, inspect:

- Electrolyte level (station dc supply voltage and unintentional ground detection is being maintained more frequently by the monitoring system).

Every 18 calendar months, verify/inspect the following:

- Battery bank ohmic values to station battery baseline (if performance tests are not opted)
- Battery charger float voltage
- Battery rack integrity
- Cell condition of all individual battery cells (where visible)
- Battery continuity
- Battery terminal connection resistance
- Battery cell-to-cell resistance (where available to measure)

Every six calendar years, perform/verify the following:

- Battery performance test (if internal ohmic tests or other measurements indicative of battery performance are not opted)
- Verify that each trip coil is able to operate the circuit breaker, interrupting device, or mitigating device
- For electromechanical lock-out relays, electrical operation of electromechanical trip

Every 12 calendar years, verify the following:

- Microprocessor relay settings are as specified
- Operation of the microprocessor's relay inputs and outputs that are essential to proper functioning of the Protection System
- Acceptable measurement of power System input values seen by the microprocessor protective relay
- Verify that current and voltage signal values are provided to the protective relays
- Protection System component monitoring for the battery system signals are conveyed to a location where corrective action can be initiated
- The microprocessor relay alarm signals are conveyed to a location where corrective action can be initiated
- Verify all trip paths in the control circuitry associated with protective functions through the trip coil(s) of the circuit breakers or other interrupting devices
- Auxiliary outputs that are in the trip path shall be maintained as detailed in Table 1-5 of the standard under the 'Unmonitored Control Circuitry Associated with Protective Functions" section'
- Auxiliary outputs not in a trip path (i.e., annunciation or DME input) are not required, by this standard, to be checked

Example #2: A combination of monitored and unmonitored components within a given Protection System might be:

- A microprocessor relay with integral alarm that is not connected to SCADA. (unmonitored)
- Current and voltage signal values, with no monitoring, connected as inputs to that relay. (unmonitored)
- A vented lead-acid battery with a low voltage alarm for the station dc supply voltage and an unintentional grounds detection alarm connected to SCADA. (monitoring varies)
- A circuit breaker with a trip coil, with no circuits monitored. (unmonitored)

Given the particular components and conditions, and using the Table 1 (Maximum Allowable Testing Intervals and Maintenance Activities) and Table 2 (Alarming Paths and Monitoring), the particular components have maximum activity intervals of:

Every four calendar months, inspect:

- Electrolyte level (station dc supply voltage and unintentional ground detection is being maintained more frequently by the monitoring system)

Every 18 calendar months, verify/inspect the following:

- Battery bank trending of ohmic values or other measurements indicative of battery performance to station battery baseline (if performance tests are not opted)
- Battery charger float voltage
- Battery rack integrity
- Cell condition of all individual battery cells (where visible)
- Battery continuity
- Battery terminal connection resistance
- Battery cell-to-cell resistance (where available to measure)

Every six calendar years, verify/perform the following:

- Verify operation of the relay inputs and outputs that are essential to proper functioning of the Protection System
- Verify acceptable measurement of power system input values as seen by the relays
- Verify that each trip coil is able to operate the circuit breaker, interrupting device, or mitigating device
- For electromechanical lock-out relays, electrical operation of electromechanical trip
- Battery performance test (if internal ohmic tests are not opted)

Every 12 calendar years, verify the following:

- Current and voltage signal values are provided to the protective relays
- Protection System component monitoring for the battery system signals are conveyed to a location where corrective action can be initiated
- All trip paths in the control circuitry associated with protective functions through the trip coil(s) of the circuit breakers or other interrupting devices
- Auxiliary outputs that are in the trip path shall be maintained, as detailed in Table 1-5 of the standard under the Unmonitored Control Circuitry Associated with Protective Functions" section
- Auxiliary outputs not in a trip path (i.e., annunciation or DME input) are not required, by this standard, to be checked

Example #3: A combination of monitored and unmonitored components within a given Protection System might be:

- A microprocessor relay with alarm connected to SCADA to alert 24-hr staffed operations center; it has internal self diagnosis and alarms. (monitored)
- Current and voltage signal values, with monitoring, connected as inputs to that relay (monitored)

- Vented Lead-Acid battery without any alarms connected to SCADA (unmonitored)
- Circuit breaker with a trip coil, with no circuits monitored (unmonitored)

Given the particular components, conditions, and using the Table 1 (Maximum Allowable Testing Intervals and Maintenance Activities) and Table 2 (Alarming Paths and Monitoring), the particular components shall have maximum activity intervals of:

Every four calendar months, verify/inspect the following:

- Station dc supply voltage
- For unintentional grounds
- Electrolyte level

Every 18 calendar months, verify/inspect the following:

- Battery bank trending of ohmic values or other measurements indicative of battery performance to station battery baseline (if performance tests are not opted)
- Battery charger float voltage
- Battery rack integrity
- Battery continuity
- Battery terminal connection resistance
- Battery cell-to-cell resistance (where available to measure)
- Condition of all individual battery cells (where visible)

Every six calendar years, perform/verify the following:

- Battery performance test (if internal ohmic tests or other measurements indicative of battery performance are not opted)
- Verify that each trip coil is able to operate the circuit breaker, interrupting device, or mitigating device
- For electromechanical lock-out relays, electrical operation of electromechanical trip

Every 12 calendar years, verify the following:

- The microprocessor relay alarm signals are conveyed to a location where corrective action can be taken
- Microprocessor relay settings are as specified
- Operation of the microprocessor's relay inputs and outputs that are essential to proper functioning of the Protection System
- Acceptable measurement of power system input values seen by the microprocessor protective relay
- Verify all trip paths in the control circuitry associated with protective functions through the trip coil(s) of the circuit breakers or other interrupting devices

- Auxiliary outputs that are in the trip path shall be maintained, as detailed in Table 1-5 of the standard under the Unmonitored Control Circuitry Associated with Protective Functions section
- Auxiliary outputs not in a trip path (i.e. annunciation or DME input) are not required, by this standard, to be checked

Why do components have different maintenance activities and intervals if they are monitored?

The intent behind different activities and intervals for monitored equipment is to allow less frequent manual intervention when more information is known about the condition of Protection System components. Condition-Based Maintenance is a valuable asset to improve reliability.

Can all components in a Protection System be monitored?

No. For some components in a Protection System, monitoring will not be relevant. For example, a battery will always need some kind of inspection.

We have a 30-year-old oil circuit breaker with a red indicating lamp on the substation relay panel that is illuminated only if there is continuity through the breaker trip coil. There is no SCADA monitor or relay monitor of this trip coil. The line protection relay package that trips this circuit breaker is a microprocessor relay that has an integral alarm relay that will assert on a number of conditions that includes a loss of power to the relay. This alarm contact connects to our SCADA system and alerts our 24-hour operations center of relay trouble when the alarm contact closes. This microprocessor relay trips the circuit breaker only and does not monitor trip coil continuity or other things such as trip current. Are the components monitored or not? How often must I perform maintenance?

The protective relay is monitored and can be maintained every 12 years, or when an Unresolved Maintenance Issue arises. The control circuitry can be maintained every 12 years. The circuit breaker trip coil(s) has to be electrically operated at least once every six years.

What is a mitigating device?

A mitigating device is the device that acts to respond as directed by a Special Protection System. It may be a breaker, valve, distributed control system, or any variety of other devices.

8. Maximum Allowable Verification Intervals

The maximum allowable testing intervals and maintenance activities show how CBM with newer device types can reduce the need for many of the tests and site visits that older Protection System components require. As explained below, there are some sections of the Protection System that monitoring or data analysis may not verify. Verifying these sections of the Protection Systems requires some persistent TBM activity in the maintenance program. However, some of this TBM can be carried out remotely - for example, exercising a circuit breaker through the relay tripping circuits using the relay remote control capabilities can be used to verify function of one tripping path and proper trip coil operation, if there has been no Fault or routine operation to demonstrate performance of relay tripping circuits.

8.1 Maintenance Tests

Periodic maintenance testing is performed to ensure that the protection and control system is operating correctly after a time period of field installation. These tests may be used to ensure that individual components are still operating within acceptable performance parameters - this type of test is needed for components susceptible to degraded or changing characteristics due to aging and wear. Full system performance tests may be used to confirm that the total Protection System functions from measurement of power system values, to properly identifying Fault characteristics, to the operation of the interrupting devices.

8.1.1 Table of Maximum Allowable Verification Intervals

Table 1 (collectively known as Table 1, individually called out as Tables 1-1 through 1-5), Table 2 and Table 3 in the standard specify maximum allowable verification intervals for various generations of Protection Systems and categories of equipment that comprise Protection Systems. The right column indicates maintenance activities required for each category.

The types of components are illustrated in Figures 1 and 2 at the end of this paper. Figure 1 shows an example of telecommunications-assisted transmission Protection System comprising substation equipment at each terminal and a telecommunications channel for relaying between the two substations. Figure 2 shows an example of a generation Protection System. The various sub-systems of a Protection System that need to be verified are shown.

Non-distributed UFLS, UVLS, and SPS are additional categories of Table 1 that are not illustrated in these figures. Non-distributed UFLS, UVLS and SPS all use identical equipment as Protection Systems in the performance of their functions; and, therefore, have the same maintenance needs.

Distributed UFLS and UVLS Systems, which use local sensing on the distribution System and trip co-located non-BES interrupting devices, are addressed in Table 3 with reduced maintenance activities.

While it is easy to associate protective relays to multiple levels of monitoring, it is also true that most of the components that can make up a Protection System can also have technological advancements that place them into higher levels of monitoring.

To use the Maintenance Activities and Intervals Tables from PRC-005-2:

- First find the Table associated with your component. The tables are arranged in the order of mention in the definition of Protection System;

- Table 1-1 is for protective relays,
- Table 1-2 is for the associated communications systems,
- Table 1-3 is for current and voltage sensing devices,
- Table 1-4 is for station dc supply and
- Table 1-5 is for control circuits.
- Table 2, is for alarms; this was broken out to simplify the other tables.
- Table 3 is for components which make-up distributed UFLS and UVLS Systems.

- Next look within that table for your device and its degree of monitoring. The Tables have different hands-on maintenance activities prescribed depending upon the degree to which you monitor your equipment. Find the maintenance activity that applies to the monitoring level that you have on your piece of equipment.
- This Maintenance activity is the minimum maintenance activity that must be documented.
- If your Performance-Based Maintenance (PBM) plan requires more activities, then you must perform and document to this higher standard. (Note that this does not apply unless you utilize PBM.)
- After the maintenance activity is known, check the maximum maintenance interval; this time is the maximum time allowed between hands-on maintenance activity cycles of this component.
- If your Performance-Based Maintenance plan requires activities more often than the Tables maximum, then you must perform and document those activities to your more stringent standard. (Note that this does not apply unless you utilize PBM.)
- Any given component of a Protection System can be determined to have a degree of monitoring that may be different from another component within that same Protection System. For example, in a given Protection System it is possible for an entity to have a monitored protective relay and an unmonitored associated communications system; this combination would require hands-on maintenance activity on the relay at least once every 12 years and attention paid to the communications system as often as every four months.
- An entity does not have to utilize the extended time intervals made available by this use of condition-based monitoring. An easy choice to make is to simply utilize the unmonitored level of maintenance made available on each of the five Tables. While the maintenance activities resulting from this choice would require more maintenance man-hours, the maintenance requirements may be simpler to document and the resulting maintenance plans may be easier to create.

For each Protection System component, Table 1 shows maximum allowable testing intervals for the various degrees of monitoring. These degrees of monitoring, or levels, range from the legacy unmonitored through a system that is more comprehensively monitored.

It has been noted here that an entity may have a PSMP that is more stringent than PRC-005-2. There may be any number of reasons that an entity chooses a more stringent plan than the

minimums prescribed within PRC-005-2, most notable of which is an entity using performance based maintenance methodology. If an entity has a Performance-Based Maintenance program, then that plan must be followed, even if the plan proves to be more stringent than the minimums laid out in the Tables.

8.1.2 Additional Notes for Tables 1-1 through 1-5 and Table 3

1. For electromechanical relays, adjustment is required to bring measurement accuracy within the tolerance needed by the asset owner. Microprocessor relays with no remote monitoring of alarm contacts, etc, are unmonitored relays and need to be verified within the Table interval as other unmonitored relays but may be verified as functional by means other than testing by simulated inputs.

2. Microprocessor relays typically are specified by manufacturers as not requiring calibration, but acceptable measurement of power system input values must be verified (verification of the Analog to Digital [A/D] converters) within the Table intervals. The integrity of the digital inputs and outputs that are used as protective functions must be verified within the Table intervals.

3. Any Phasor Measurement Unit (PMU) function whose output is used in a Protection System or SPS (as opposed to a monitoring task) must be verified as a component in a Protection System.

4. In addition to verifying the circuitry that supplies dc to the Protection System, the owner must maintain the station dc supply. The most widespread station dc supply is the station battery and charger. Unlike most Protection System components, physical inspection of station batteries for signs of component failure, reduced performance, and degradation are required to ensure that the station battery is reliable enough to deliver dc power when required. IEEE Standards 450, 1188, and 1106 for vented lead-acid, valve-regulated lead-acid, and nickel-cadmium batteries, respectively (which are the most commonly used substation batteries on the NERC BES) have been developed as an important reference source of maintenance recommendations. The Protection System owner might want to follow the guidelines in the applicable IEEE recommended practices for battery maintenance and testing, especially if the battery in question is used for application requirements in addition to the protection and control demands covered under this standard.~~.~~ However, the Standard Drafting Team~~committee~~ has tailored the battery maintenance and testing guidelines in PRC-005-2 for the Protection System owner which are application specific for the BES Facilities. While the IEEE recommendations are all encompassing, PRC-005-2 is a more economical approach while addressing the reliability requirements of the BES.

5. Aggregated small entities might distribute the testing of the population of UFLS/UVLS systems, and large entities will usually maintain a portion of these systems in any given year. Additionally, if relatively small quantities of such systems do not perform properly, it will not affect the integrity of the overall program. Thus, these distributed systems have decreased requirements as compared to other Protection Systems.

6. Voltage & current sensing device~~Current Sensing Device~~ circuit input connections to the Protection System relays can be verified by (but not limited to) comparison of measured values on live circuits or by using test currents and voltages on equipment out of service for maintenance. The verification process can be automated or manual. The values

should be verified to be as expected (phase value and phase relationships are both equally important to verify).

7. "End-to-end test," as used in this Supplementary Reference, is any testing procedure that creates a remote input to the local communications-assisted trip scheme. While this can be interpreted as a GPS-type functional test, it is not limited to testing via GPS. Any remote scheme manipulation that can cause action at the local trip path can be used to functionally-test the dc control circuitry. A documented Real-time trip of any given trip path is acceptable in lieu of a functional trip test. It is possible, with sufficient monitoring, to be able to verify each and every parallel trip path that participated in any given dc control circuit~~Control Circuit~~ trip. Or another possible solution is that a single trip path from a single monitored relay can be verified to be the trip path that successfully tripped during a Real-time operation. The variations are only limited by the degree of engineering and monitoring that an entity desires to pursue.

8. A/D verification may use relay front panel value displays, or values gathered via data communications. Groupings of other measurements (such as vector summation of bus feeder currents) can be used for comparison if calibration requirements assure acceptable measurement of power system input values.

9. Notes 1-8 attempt to describe some testing activities; they do not represent the only methods to achieve these activities, but rather some possible methods. Technological advances, ingenuity and/or industry accepted techniques can all be used to satisfy maintenance activity requirements; the standard is technology- and method-neutral in most cases.

8.1.3 Frequently Asked Questions:

What is meant by "Verify that settings are as specified" maintenance activity in Table 1-1?

Verification of settings is an activity directed mostly towards microprocessor- based relays. For relay maintenance departments that choose to test microprocessor-based relays in the same manner as electromechanical relays are tested, the testing process sometimes requires that some specific functions be disabled. Later tests might enable the functions previously disabled, but perhaps still other functions or logic statements were then masked out. It is imperative that, when the relay is placed into service, the settings in the relay be the settings that were intended to be in that relay or as the standard states "…settings are as specified."

Many of the microprocessor- based relays available today have software tools which provide this functionality and generate reports for this purpose.

For evidence or documentation of this requirement, a simple recorded acknowledgement that the settings were checked to be as specified is sufficient.

The drafting team was careful not to require "…that the relay settings be correct…" because it was believed that this might then place a burden of proof that the specified settings would result in the correct intended operation of the interrupting device. While that is a noble intention, the measurable proof of such a requirement is immense. The intent is that settings of the component be as specified at the conclusion of maintenance activities, whether those settings may have "drifted" since the prior maintenance or whether changes were made as part of the testing process.

Are electromechanical relays included in the "Verify that settings are as specified" maintenance activity in Table 1-1?

Verification of settings is an activity directed towards the application of protection related functions of microprocessor based relays. Electromechanical relays require calibration verification by voltage and/or current injection; and, thus, the settings are verified during calibration activity. In the example of a time-overcurrent relay, a minor deviation in time dial, versus the settings, may be acceptable, as long as the relay calibration is within accepted tolerances at the injected current amplitudes. A major deviation may require further investigation, as it could indicate a problem with the relay or an incorrect relay style for the application.

The verification of phase current and voltage measurements by comparison to other quantities seems reasonable. How, though, can I verify residual or neutral currents, or 3V0 voltages, by comparison, when my system is closely balanced?

Since these inputs are verified at commissioning, maintenance verification requires ensuring that phase quantities are as expected and that 3IO and 3VO quantities appear equal to or close to 0.

These quantities also may be verified by use of oscillographic records for connected microprocessor relays as recorded during system Disturbances. Such records may compare to similar values recorded at other locations by other microprocessor relays for the same event, or compared to expected values (from short circuit studies) for known Fault locations.

What does this Standard require for testing an auxiliary tripping relay?

Table 1 and Table 3 requires that a trip test must verify that the auxiliary tripping relay(s) and/or lockout relay(s) which are directly in a trip path from the protective relay to the interrupting device trip coil operate(s) electrically. Auxiliary outputs not in a trip path (i.e. annunciation or DME input) are not required, by this standard, to be checked.

Do I have to perform a full end-to-end test of a Special Protection System?

No. All portions of the SPS need to be maintained, and the portions must overlap, but the overall SPS does not need to have a single end-to-end test. In other words it may be tested in piecemeal fashion provided all of the pieces are verified.

What about SPS interfaces between different entities or owners?

As in all of the Protection System requirements, SPS segments can be tested individually, thus minimizing the need to accommodate complex maintenance schedules.

What do I have to do if I am using a phasor measurement unit (PMU) as part of a Protection System or Special Protection System?

Any Phasor Measurement Unit (PMU) function whose output is used in a Protection System or Special Protection System (as opposed to a monitoring task) must be verified as a component in a Protection System.

How do I maintain a Special Protection System or relay sensing for non-distributed UFLS or UVLS Systems?

Since components of the SPS, UFLS and UVLS are the same types of components as those in Protection Systems, then these components should be maintained like similar components used for other Protection System functions. In many cases the devices for SPS, UFLS and UVLS

are also used for other protective functions. The same maintenance activities apply with the exception that distributed systems (UFLS and UVLS) have fewer dc supply and control circuitry maintenance activity requirements.

For the testing of the output action, verification may be by breaker tripping, but may be verified in overlapping segments. For example, an SPS that trips a remote circuit breaker might be tested by testing the various parts of the scheme in overlapping segments. Another method is to document the Real-time tripping of an SPS scheme should that occur. Forced trip tests of circuit breakers (etc) that are a part of distributed UFLS or UVLS schemes are not required.

The established maximum allowable intervals do not align well with the scheduled outages for my power plant. Can I extend the maintenance to the next scheduled outage following the established maximum interval?

No. You must complete your maintenance within the established maximum allowable intervals in order to be compliant. You will need to schedule your maintenance during available outages to complete your maintenance as required, even if it means that you may do protective relay maintenance more frequently than the maximum allowable intervals. The maintenance intervals were selected with typical plant outages, among other things, in mind.

If I am unable to complete the maintenance, as required, due to a major natural disaster (hurricane, earthquake, etc.), how will this affect my compliance with this standard?

The Sanction Guidelines of the North American Electric Reliability Corporation, effective January 15, 2008, provides that the Compliance Monitor will consider extenuating circumstances when considering any sanctions.

What if my observed testing results show a high incidence of out-of-tolerance relays; or, even worse, I am experiencing numerous relay Misoperations due to the relays being out-of-tolerance?

The established maximum time intervals are mandatory only as a not-to-exceed limitation. The establishment of a maximum is measurable. But any entity can choose to test some or all of their Protection System components more frequently (or to express it differently, exceed the minimum requirements of the standard). Particularly if you find that the maximum intervals in the standard do not achieve your expected level of performance, it is understandable that you would maintain the related equipment more frequently. A high incidence of relay Misoperations is in no one's best interest.

We believe that the four-month interval between inspections is unneccessary. Why can we not perform these inspections twice per year?

The Standard Drafting Team, through the comment process, has discovered that routine monthly inspections are not the norm. To align routine station inspections with other important inspections, the four-month interval was chosen. In lieu of station visits, many activities can be accomplished with automated monitoring and alarming.

Our maintenance plan calls for us to perform routine protective relay tests every 3 years. If we are unable to achieve this schedule, but we are able to complete the procedures in less than the maximum time interval ,then are we in or out of compliance?

According to R3, if you have a time-based maintenance program, then you will be in violation of the standard only if you exceed the maximum maintenance intervals prescribed in the Tables. According to R4, if your device in question is part of a Performance-Based Maintenance program, then you will be in violation of the standard if you fail to meet your PSMP, even if you do not exceed the maximum maintenance intervals prescribed in the Tables. The intervals in the Tables are associated with TBM and CBM; Attachment A is associated with PBM.

Please provide a sample list of devices or systems that must be verified in a generator, generator step-up transformer, generator connected station service or generator connected excitation transformer to meet the requirements of this maintenance standard.

Examples of typical devices and systems that may directly trip the generator, or trip through a lockout relay, may include, but are not necessarily limited to:

- Fault protective functions, including distance functions, voltage-restrained overcurrent functions, or voltage-controlled overcurrent functions
- Loss-of-field relays
- Volts-per-hertz relays
- Negative sequence overcurrent relays
- Over voltage and under voltage protection relays
- Stator-ground relays
- Communications-based Protection Systems such as transfer-trip systems
- Generator differential relays
- Reverse power relays
- Frequency relays
- Out-of-step relays
- Inadvertent energization protection
- Breaker failure protection

For generator step-up, generator-connected station service transformers, or generator connected excitation transformers, operation of any of the following associated protective relays frequently would result in a trip of the generating unit; and, as such, would be included in the program:

- Transformer differential relays
- Neutral overcurrent relay
- Phase overcurrent relays

Relays which trip breakers serving station auxiliary Loads such as pumps, fans, or fuel handling equipment, etc., need not be included in the program, even if the loss of the those Loads could result in a trip of the generating unit. Furthermore, relays which provide protection to secondary unit substation (SUS) or low switchgear transformers and relays protecting other downstream plant electrical distribution system components are not included in the scope of

this program, even if a trip of these devices might eventually result in a trip of the generating unit. For example, a thermal overcurrent trip on the motor of a coal-conveyor belt could eventually lead to the tripping of the generator, but it does not cause the trip.

In the case where a plant does not have a generator connected station service transformer such that it is normally fed from a system connected station service transformer, is it still the drafting team's intent to exclude the Protection Systems for these system connected auxiliary transformers from scope even when the loss of the normal (system connected) station service transformer will result in a trip of a BES generating Facility?

The SDT does not intend that the system-connected station service transformers be included in the Applicability. The generator-connected station service transformers and generator connected excitation transformers are often connected to the generator bus directly without an interposing breaker; thus, the Protection Systems on these transformers will trip the generator as discussed in 4.2.5.1.

What is meant by "verify operation of the relay inputs and outputs that are essential to proper functioning of the Protection System?"

Any input or output (of the relay) that "affects the tripping" of the breaker is included in the scope of I/O of the relay to be verified. By "affects the tripping," one needs to realize that sometimes there are more inputs and outputs than simply the output to the trip coil. Many important protective functions include things like breaker fail initiation, zone timer initiation and sometimes even 52a/b contact inputs are needed for a protective relay to correctly operate.

Each input should be "picked up" or "turned on and off" and verified as changing state by the microprocessor of the relay. Each output should be "operated" or "closed and opened" from the microprocessor of the relay and the output should be verified to change state on the output terminals of the relay. One possible method of testing inputs of these relays is to "jumper" the needed dc voltage to the input and verify that the relay registered the change of state.

Electromechanical lock-out relays (86) (used to convey the tripping current to the trip coils) need to be electrically operated to prove the capability of the device to change state. These tests need to be accomplished at least every six years, unless PBM methodology is applied.

The contacts on the 86 or auxiliary tripping relays (94) that change state to pass on the trip current to a breaker trip coil need only be checked every 12 years with the control circuitry.

What is the difference between a distributed UFLS/UVLS and a non-distributed UFLS/UVLS scheme?

A distributed UFLS or UVLS scheme contains individual relays which make independent Load shed decisions based on applied settings and localized voltage and/or current inputs. A distributed scheme may involve an enable/disable contact in the scheme and still be considered a distributed scheme. A non-distributed UFLS or UVLS scheme involves a system where there is some type of centralized measurement and Load shed decision being made. A non-distributed UFLS/UVLS scheme is considered similar to an SPS scheme and falls under Table 1 for maintenance activities and intervals.

8.2 Retention of Records

PRC-005-1 describes a reporting or auditing cycle of one year and retention of records for three years. However, with a three-year retention cycle, the records of verification for a Protection System might be discarded before the next verification, leaving no record of what was done if a Misoperation or failure is to be analyzed.

PRC-005-2 corrects this by requiring:

The Transmission Owner, Generator Owner, and Distribution Provider shall each retain documentation of the two most recent performances of each distinct maintenance activity for the Protection System components, or to the previous scheduled (on-site) audit date, whichever is longer.

This requirement assures that the documentation shows that the interval between maintenance cycles correctly meets the maintenance interval limits. The requirement is actually alerting the industry to documentation requirements already implemented by audit teams. Evidence of compliance bookending the interval shows interval accomplished instead of proving only your planned interval.

The SDT is aware that, in some cases, the retention period could be relatively long. But, the retention of documents simply helps to demonstrate compliance.

8.2.1 Frequently Asked Questions:

Please use a specific example to demonstrate the data retention requirements.

The data retention requirements are intended to allow the availability of maintenance records to demonstrate that the time intervals in your maintenance plan were upheld. For example: "Company A" has a maintenance plan that requires its electromechanical protective relays be tested every three calendar years, with a maximum allowed grace period of an additional 18 months. This entity would be required to maintain its records of maintenance of its last two routine scheduled tests. Thus, its test records would have a latest routine test, as well as its previous routine test. The interval between tests is, therefore, provable to an auditor as being within "Company A's" stated maximum time interval of 4.5 years.

The intent is not to require three test results proving two time intervals, but rather have two test results proving the last interval. The drafting team contends that this minimizes storage requirements, while still having minimum data available to demonstrate compliance with time intervals.

If an entity prefers to utilize Performance-Based Maintenance, then statistical data may well be retained for extended periods to assist with future adjustments in time intervals.

If an equipment item is replaced, then the entity can restart the maintenance-time-interval-clock if desired; however, the replacement of equipment does not remove any documentation requirements that would have been required to verify compliance with time-interval requirements. In other words, do not discard maintenance data that goes to verify your work.

The retention of documentation for new and/or replaced equipment is all about proving that the maintenance intervals had been in compliance. For example, a long-range plan of upgrades might lead an entity to ignore required maintenance; retaining the evidence of prior maintenance that existed before any retirements and upgrades proves compliance with the standard.

What does this Maintenance Standard say about commissioning? Is it necessary to have documentation in your maintenance history of the completion of commission testing?

This standard does not establish requirements for commission testing. Commission testing includes all testing activities necessary to conclude that a Facility has been built in accordance with design. While a thorough commission testing program would include, either directly or indirectly, the verification of all those Protection System attributes addressed by the maintenance activities specified in the Tables of PRC-005-2, verification of the adequacy of initial installation necessitates the performance of testing and inspections that go well beyond these routine maintenance activities. For example, commission testing might set baselines for future tests; perform acceptance tests and/or warranty tests; utilize testing methods that are not generally done routinely like staged-Fault-tests.

However, many of the Protection System attributes which are verified during commission testing are not subject to age related or service related degradation, and need not be re-verified within an ongoing maintenance program. Example – it is not necessary to re-verify correct terminal strip wiring on an ongoing basis.

PRC-005-2 assumes that thorough commission testing was performed prior to a Protection System being placed in service. PRC-005-2 requires performance of maintenance activities that are deemed necessary to detect and correct plausible age and service related degradation of components, such that a properly built and commission tested Protection System will continue to function as designed over its service life.

It should be noted that commission testing frequently is performed by a different organization than that which is responsible for the ongoing maintenance of the Protection System. Furthermore, the commission testing activities will not necessarily correlate directly with the maintenance activities required by the standard. As such, it is very likely that commission testing records will deviate significantly from maintenance records in both form and content; and, therefore, it is not necessary to maintain commission testing records within the maintenance program documentation.

Notwithstanding the differences in records, an entity would be wise to retain commissioning records to show a maintenance start date. (See below). An entity that requires that their commissioning tests have, at a minimum, the requirements of PRC-005-2 would help that entity prove time interval maximums by setting the initial time clock.

How do you determine the initial due date for maintenance?

The initial due date for maintenance should be based upon when a Protection System was tested. Alternatively, an entity may choose to use the date of completion of the commission testing of the Protection System component and the system was placed into service as the starting point in determining its first maintenance due dates. Whichever method is chosen, for newly installed Protection Systems the components should not be placed into service until minimum maintenance activities have taken place.

It is conceivable that there can be a (substantial) difference in time between the date of testing, as compared to the date placed into service. The use of the "Calendar Year" language can help determine the next due date without too much concern about being non-compliant for missing test dates by a small amount (provided your dates are not already at the end of a year). However, if there is a substantial amount of time difference between testing and in-service

dates, then the testing date should be followed because it is the degradation of components that is the concern. While accuracy fluctuations may decrease when components are not energized, there are cases when degradation can take place, even though the device is not energized. Minimizing the time between commissioning tests and in-service dates will help.

If I miss two battery inspections four times out of 100 Protection System components on my transmission system, does that count as 2% or 8% when counting Violation Severity Level (VSL) for R3?

The entity failed to complete its scheduled program on two of its 100 Protection System components, which would equate to 2% for application to the VSL Table for Requirement R3. This VSL is written to compare missed components to total components. In this case two components out of 100 were missed, or 2%.

How do I achieve a "grace period" without being out of compliance?

The objective here is to create a time extension within your own PSMP that still does not violate the maximum time intervals stated in the standard. Remember that the maximum time intervals listed in the Tables cannot be extended.

For the purposes of this example, concentrating on just unmonitored protective relays – Table 1-1 specifies a maximum time interval (between the mandated maintenance activities) of six calendar years. Your plan must ensure that your unmonitored relays are tested at least once every six calendar years. You could, within your PSMP, require that your unmonitored relays be tested every four calendar years, with a maximum allowable time extension of 18 calendar months. This allows an entity to have deadlines set for the auto-generation of work orders, but still has the flexibility in scheduling complex work schedules. This also allows for that 18 calendar months to act as a buffer, in effect a grace period within your PSMP, in the event of unforeseen events. You will note that this example of a maintenance plan interval has a planned time of four years; it also has a built-in time extension allowed within the PSMP, and yet does not exceed the maximum time interval allowed by the standard. So while there are no time extensions allowed beyond the standard, an entity can still have substantial flexibility to maintain their Protection System components.

8.3 Basis for Table 1 Intervals

When developing the original *Protection System Maintenance – A Technical Reference* in 2007, the SPCTF collected all available data from Regional Entities (REs) on time intervals recommended for maintenance and test programs. The recommendations vary widely in categorization of relays, defined maintenance actions, and time intervals, precluding development of intervals by averaging. The SPCTF also reviewed the 2005 Report [2] of the IEEE Power System Relaying Committee Working Group I-17 (Transmission Relay System Performance Comparison). Review of the I-17 report shows data from a small number of utilities, with no company identification or means of investigating the significance of particular results.

To develop a solid current base of practice, the SPCTF surveyed its members regarding their maintenance intervals for electromechanical and microprocessor relays, and asked the members to also provide definitively-known data for other entities. The survey represented 470 GW of peak Load, or 4% of the NERC peak Load. Maintenance interval averages were compiled by weighting reported intervals according to the size (based on peak Load) of the reporting

utility. Thus, the averages more accurately represent practices for the large populations of Protection Systems used across the NERC regions.

The results of this survey with weighted averaging indicate maintenance intervals of five years for electromechanical or solid state relays, and seven years for unmonitored microprocessor relays.

A number of utilities have extended maintenance intervals for microprocessor relays beyond seven years, based on favorable experience with the particular products they have installed. To provide a technical basis for such extension, the SPCTF authors developed a recommendation of 10 years using the Markov modeling approach from [1], as summarized in Section 8.4. The results of this modeling depend on the completeness of self-testing or monitoring. Accordingly, this extended interval is allowed by Table 1, only when such relays are monitored as specified in the attributes of monitoring contained in Tables 1-1 through 1-5 and Table 2. Monitoring is capable of reporting Protection System health issues that are likely to affect performance within the 10 year time interval between verifications.

It is important to note that, according to modeling results, Protection System availability barely changes as the maintenance interval is varied below the 10-year mark. Thus, reducing the maintenance interval does not improve Protection System availability. With the assumptions of the model regarding how maintenance is carried out, reducing the maintenance interval actually degrades Protection System availability.

8.4 Basis for Extended Maintenance Intervals for Microprocessor Relays

Table 1 allows maximum verification intervals that are extended based on monitoring level. The industry has experience with self-monitoring microprocessor relays that leads to the Table 1 value for a monitored relay, as explained in Section 8.3. To develop a basis for the maximum interval for monitored relays in their *Protection System Maintenance – A Technical Reference*, the SPCTF used the methodology of Reference [1], which specifically addresses optimum routine maintenance intervals. The Markov modeling approach of [1] is judged to be valid for the design and typical failure modes of microprocessor relays.

The SPCTF authors ran test cases of the Markov model to calculate two key probability measures:

- Relay Unavailability - the probability that the relay is out of service due to failure or maintenance activity while the power system Element to be protected is in service.
- Abnormal Unavailability - the probability that the relay is out of service due to failure or maintenance activity when a Fault occurs, leading to failure to operate for the Fault.

The parameter in the Markov model that defines self-monitoring capability is ST (for self test). ST = 0 if there is no self-monitoring; ST = 1 for full monitoring. Practical ST values are estimated to range from .75 to .95. The SPCTF simulation runs used constants in the Markov model that were the same as those used in [1] with the following exceptions:

Sn, Normal tripping operations per hour = 21600 (reciprocal of normal Fault clearing time of 10 cycles)

Sb, Backup tripping operations per hour = 4320 (reciprocal of backup Fault clearing time of 50 cycles)

Rc, Protected component repairs per hour = 0.125 (8 hours to restore the power system)

Rt, Relay routine tests per hour = 0.125 (8 hours to test a Protection System)

Rr, Relay repairs per hour = 0.08333 (12 hours to complete a Protection System repair after failure)

Experimental runs of the model showed low sensitivity of optimum maintenance interval to these parameter adjustments.

The resulting curves for relay unavailability and abnormal unavailability versus maintenance interval showed a broad minimum (optimum maintenance interval) in the vicinity of 10 years – the curve is flat, with no significant change in either unavailability value over the range of 9, 10, or 11 years. This was true even for a relay mean time between Failures (MTBF) of 50 years, much lower than MTBF values typically published for these relays. Also, the Markov modeling indicates that both the relay unavailability and abnormal unavailability actually become higher with more frequent testing. This shows that the time spent on these more frequent tests yields no failure discoveries that approach the negative impact of removing the relays from service and running the tests.

The PSMT SDT discussed the practical need for "time-interval extensions" or "grace periods" to allow for scheduling problems that resulted from any number of business contingencies. The time interval discussions also focused on the need to reflect industry norms surrounding Generator outage frequencies. Finally, it was again noted that FERC Order 693 demanded maximum time intervals. "Maximum time intervals" by their very term negates any "time-interval extension" or "grace periods." To recognize the need to follow industry norms on Generator outage frequencies and accommodate a form of time-interval extension, while still following FERC Order 693, the Standard Drafting Team arrived at a six-year interval for the electromechanical relay, instead of the five-year interval arrived at by the SPCTF. The PSMT SDT has followed the FERC directive for a *maximum* time interval and has determined that no extensions will be allowed. Six years has been set for the maximum time interval between manual maintenance activities. This maximum time interval also works well for maintenance cycles that have been in use in generator plants for decades.

For monitored relays, the PSMT SDT notes that the SPCTF called for 10 years as the interval between maintenance activities. This 10-year interval was chosen, even though there was "…no significant change in unavailability value over the range of 9, 10, or 11 years. This was true even for a relay Mean Time between Failures (MTBF) of 50 years…" The Standard Drafting Team again sought to align maintenance activities with known successful practices and outage schedules. The Standard does not allow extensions on any component of the Protection System; thus, the maximum allowed interval for these components has been set to 12 years. Twelve years also fits well into the traditional maintenance cycles of both substations and generator plants.

Also of note is the Table's use of the term "Calendar" in the column for "Maximum Maintenance Interval." The PSMT SDT deemed it necessary to include the term "Calendar" to facilitate annual maintenance planning, scheduling and implementation. This need is the result of known occurrences of system requirements that could cause maintenance schedules to be missed by a few days or weeks. The PSMT SDT chose the term "Calendar" to preclude the need to have schedules be met to the day. An electromechanical protective relay that is maintained in year number one need not be revisited until six years later (year number seven). For

example, a relay was maintained April 10, 2008; maintenance would need to be completed no later than December 31, 2014.

Though not a requirement of this standard, to stay in line with many Compliance Enforcement Agencies audit processes an entity should define, within their own PSMP, the entity's use of terms like annual, calendar year, etc. Then, once this is within the PSMP, the entity should abide by their chosen language.

9. Performance-Based Maintenance Process

In lieu of using the Table 1 intervals, a Performance-Based Maintenance process may be used to establish maintenance intervals (*PRC-005 Attachment A Criteria for a Performance-Based Protection System Maintenance Program*). A Performance-Based Maintenance process may justify longer maintenance intervals, or require shorter intervals relative to Table 1. In order to use a Performance-Based Maintenance process, the documented maintenance program must include records of repairs, adjustments, and corrections to covered Protection Systems in order to provide historical justification for intervals, other than those established in Table 1. Furthermore, the asset owner must regularly analyze these records of corrective actions to develop a ranking of causes. Recurrent problems are to be highlighted, and remedial action plans are to be documented to mitigate or eliminate recurrent problems.

Entities with Performance-Based Maintenance track performance of Protection Systems, demonstrate how they analyze findings of performance failures and aberrations, and implement continuous improvement actions. Since no maintenance program can ever guarantee that no malfunction can possibly occur, documentation of a Performance-Based Maintenance program would serve the utility well in explaining to regulators and the public a Misoperation leading to a major System outage event.

A Performance-Based Maintenance program requires auditing processes like those included in widely used industrial quality systems (such as ***ISO 9001-2000, Quality Management Systems — Requirements;*** or applicable parts of the NIST Baldridge National Quality Program). The audits periodically evaluate:

- The completeness of the documented maintenance process
- Organizational knowledge of and adherence to the process
- Performance metrics and documentation of results
- Remediation of issues
- Demonstration of continuous improvement.

In order to opt into a Performance-Based Maintenance (PBM) program, the asset owner must first sort the various Protection System components into population segments. Any population segment must be comprised of at least 60 individual units; if any asset owner opts for PBM, but does not own 60 units to comprise a population, then that asset owner may combine data from other asset owners until the needed 60 units is aggregated. Each population segment must be composed of a grouping of Protection Systems or components of a consistent design standard or particular model or type from a single manufacturer and subjected to similar environmental factors. For example: One segment cannot be comprised of both GE & Westinghouse electro-mechanical lock-out relays; likewise, one segment cannot be comprised of 60 GE lock-out relays, 30 of which are in a dirty environment, and the remaining 30 from a clean environment. This PBM process cannot be applied to batteries, but can be applied to all other components of a Protection System, including (but not limited to) specific battery chargers, instrument transformers, trip coils and/or control circuitry (etc.).

9.1 Minimum Sample Size

Large Sample Size

An assumption that needs to be made when choosing a sample size is "the sampling distribution of the sample mean can be approximated by a normal probability distribution." The Central Limit Theorem states: "In selecting simple random samples of size *n* from a population, the sampling distribution of the sample mean *x* can be approximated by a normal probability distribution as the sample size becomes large." (Essentials of Statistics for Business and Economics, Anderson, Sweeney, Williams, 2003.)

To use the Central Limit Theorem in statistics, the population size should be large. The references below are supplied to help define what is large.

> "… whenever we are using a large simple random sample (rule of thumb: n>=30), the central limit theorem enables us to conclude that the sampling distribution of the sample mean can be approximated by a normal distribution." (Essentials of Statistics for Business and Economics, Anderson, Sweeney, Williams, 2003.)
>
> "If samples of size n, when n>=30, are drawn from any population with a mean *u* and a standard deviation σ, the sampling distribution of sample means approximates a normal distribution. The greater the sample size, the better the approximation." (Elementary Statistics - Picturing the World, Larson, Farber, 2003.)
>
> "The sample size is large (generally n>=30)… (Introduction to Statistics and Data Analysis - Second Edition, Peck, Olson, Devore, 2005.)
>
> "… the normal is often used as an approximation to the *t* distribution in a test of a null hypothesis about the mean of a normally distributed population when the population variance is estimated from a relatively large sample. A sample size exceeding 30 is often given as a minimal size in this connection." (Statistical Analysis for Business Decisions, Peters, Summers, 1968.)

Error of Distribution Formula

Beyond the large sample size discussion above, a sample size requirement can be estimated using the bound on the Error of Distribution Formula when the expected result is of a "Pass/Fail" format and will be between 0 and 1.0.

The Error of Distribution Formula is:

$$B = z\sqrt{\frac{\pi(1-\pi)}{n}}$$

Where:

B = bound on the error of distribution (allowable error)

z = standard error

π = expected failure rate

n = sample size required

Solving for n provides:

$$n = \pi(1-\pi)\left(\frac{z}{B}\right)^2$$

Minimum Population Size to use Performance-Based Program

One entity's population of components should be large enough to represent a sizeable sample of a vendor's overall population of manufactured devices. For this reason, the following assumptions are made:

B = 5%

z = 1.96 (This equates to a 95% confidence level)

π = 4%

Using the equation above, n=59.0.

Minimum Sample Size to evaluate Performance-Based Program

The number of components that should be included in a sample size for evaluation of the appropriate testing interval can be smaller because a lower confidence level is acceptable since the sample testing is repeated or updated annually. For this reason, the following assumptions are made:

B = 5%

z = 1.44 (85% confidence level)

π = 4%

Using the equation above, n=31.8.

Recommendation

Based on the above discussion, a sample size should be at least 30 to allow use of the equation mentioned. Using this and the results of the equation, the following numbers are recommended (and required within the standard):

Minimum Population Size to use Performance-Based Maintenance Program = 60

Minimum Sample Size to evaluate Performance-Based Program = 30.

Once the population segment is defined, then maintenance must begin within the intervals as outlined for the device described in the Tables 1-1 through 1-5. Time intervals can be lengthened provided the last year's worth of components tested (or the last 30 units maintained, whichever is more) had fewer than 4%Countable Events. It is notable that 4% is specifically chosen because an entity with a small population (30 units) would have to adjust its time intervals between maintenance if more than one Countable Event was found to have occurred during the last analysis period. A smaller percentage would require that entity to adjust the time interval between maintenance activities if even one unit is found out of tolerance or causes a Misoperation.

The minimum number of units that can be tested in any given year is 5% of the population. Note that this 5% threshold sets a practical limitation on total length of time between intervals at 20 years.

If at any time the number of Countable Events equals or exceeds 4% of the last year's tested components (or the last 30 units maintained, whichever is more), then the time period between manual maintenance activities must be decreased. There is a time limit on reaching the decreased time at which the Countable Events is less than 4%; this must be attained within three years.

9.2 Frequently Asked Questions:

I'm a small entity and cannot aggregate a population of Protection System components to establish a segment required for a Performance-Based Protection System Maintenance Program. How can I utilize that opportunity?

Multiple asset owning entities may aggregate their individually owned populations of individual Protection System components to create a segment that crosses ownership boundaries. All entities participating in a joint program should have a single documented joint management process, with consistent Protection System Maintenance Programs (practices, maintenance intervals and criteria), for which the multiple owners are individually responsible with respect to the requirements of the Standard. The requirements established for Performance-Based Maintenance must be met for the overall aggregated program on an ongoing basis.

The aggregated population should reflect all factors that affect consistent performance across the population, including any relevant environmental factors such as geography, power-plant vs. substation, and weather conditions.

Can an owner go straight to a Performance-Based Maintenance program schedule, if they have previously gathered records?

Yes. An owner can go to a Performance-Based Maintenance program immediately. The owner will need to comply with the requirements of a Performance-Based Maintenance program as listed in the Standard. Gaps in the data collected will not be allowed; therefore, if an owner finds that a gap exists such that they cannot prove that they have collected the data as required for a Performance-Based Maintenance program then they will need to wait until they can prove compliance.

When establishing a Performance-Based Maintenance program, can I use test data from the device manufacturer, or industry survey results, as results to help establish a basis for my Performance-Based intervals?

No, you must use actual in-service test data for the components in the segment.

What types of Misoperations or events are not considered Countable Events in the Performance-Based Protection System Maintenance (PBM) Program?

Countable Events are intended to address conditions that are attributed to hardware failure or calibration failure; that is, conditions that reflect deteriorating performance of the component. These conditions include any condition where the device previously worked properly, then, due to changes within the device, malfunctioned or degraded to the point that re-calibration (to within the entity's tolerance) was required.

For this purpose of tracking hardware issues, human errors resulting in Protection System Misoperations during system installation or maintenance activities are not considered Countable Events. Examples of excluded human errors include relay setting errors, design

errors, wiring errors, inadvertent tripping of devices during testing or installation, and misapplication of Protection System components. Examples of misapplication of Protection System components include wrong CT or PT tap position, protective relay function misapplication, and components not specified correctly for their installation. Obviously, if one is setting up relevant data about hardware failures then human failures should be eliminated from the hardware performance analysis.

One example of human-error is not pertinent data might be in the area of testing "86" lock-out relays (LOR). "Entity A" has two types of LOR's type "X" and type "Y"; they want to move into a performance based maintenance interval. They have 1000 of each type, so the population variables are met. During electrical trip testing of all of their various schemes over the initial six-year interval they find zero type "X" failures, but human error led to tripping a BES Element 100 times; they find 100 type "Y" failures and had an additional 100 human-error caused tripping incidents. In this example the human-error caused Misoperations should not be used to judge the performance of either type of LOR. Analysis of the data might lead "Entity A" to change time intervals. Type "X" LOR can be placed into extended time interval testing because of its low failure rate (zero failures) while Type "Y" would have to be tested more often than every 6 calendar years (100 failures divided by 1000 units exceeds the 4% tolerance level).

Certain types of Protection System component errors that cause Misoperations are not considered Countable Events. Examples of excluded component errors include device malfunctions that are correctable by firmware upgrades and design errors that do not impact protection function.

What are some examples of methods of correcting segment perfomance for Performance-Based Maintenance?

There are a number of methods that may be useful for correcting segment performance for mal-performing segments in a Performance-Based Maintenance system. Some examples are listed below.

- The maximum allowable interval, as established by the Performance-Based Maintenance system, can be decreased. This may, however, be slow to correct the performance of the segment.
- Identifiable sub-groups of components within the established segment, which have been identified to be the mal-performing portion of the segment, can be broken out as an independent segment for target action. Each resulting segment must satisfy the minimum population requirements for a Performance-Based Maintenance program in order to remain within the program.
- Targeted corrective actions can be taken to correct frequently occurring problems. An example would be replacement of capacitors within electromechanical distance relays if bad capacitors were determined to be the cause of the mal-performance.
- components within the mal-performing segment can be replaced with other components (electromechanical distance relays with microprocessor relays, for example) to remove the mal-performing segment.

If I find (and correct) a Unresolved Maintenance Issue as a result of a Misoperation investigation (Re: PRC-004), how does this affect my Performance-Based Maintenance program?

If you perform maintenance on a Protection System component for any reason (including as part of a PRC-004 required Misoperation investigation/corrective action), the actions performed can count as a maintenance activity provided the activities in the relevant Tables have been done, and, if you desire, "reset the clock" on everything you've done. In a Performance-Based Maintenance program, you also need to record the Unresolved Maintenance Issue as a Countable Event within the relevant component group segment and use it in the analysis to determine your correct Performance-Based Maintenance interval for that component group. Note that "resetting the clock" should not be construed as interfering with an entity's routine testing schedule because the "clock-reset" would actually make for a decreased time interval by the time the next routine test schedule comes around.

For example a relay scheme, consisting of four relays, is tested on 1-1-11 and the PSMP has a time interval of 3 calendar years with an allowable extension of 1 calendar year. The relay would be due again for routine testing before the end of the year 2015. This mythical relay scheme has a Misoperation on 6-1-12 that points to one of the four relays as bad. Investigation proves a bad relay and a new one is tested and installed in place of the original. This replacement relay actually could be retested before the end of the year 2016 (clock-reset) and not be out of compliance. This requires tracking maintenance by individual relays and is allowed. However, many companies schedule maintenance in other ways like by substation or by circuit breaker or by relay scheme. By these methods of tracking maintenance that "replaced relay" will be retested before the end of the year 2015. This is also acceptable. In no case was a particular relay tested beyond the PSMP of four years max, nor was the 6 year max of the Standard exceeded. The entity can reset the clock if they desire or the entity can continue with original schedules and, in effect, test even more frequently.

Why are batteries excluded from PBM? What about exclusion of batteries from condition based maintenance?

Batteries are the only element of a Protection System that is a perishable item with a shelf life. As a perishable item batteries require not only a constant float charge to maintain their freshness (charge), but periodic inspection to determine if there are problems associated with their aging process and testing to see if they are maintaining a charge or can still deliver their rated output as required.

Besides being perishable, a second unique feature of a battery that is unlike any other Protection System element is that a battery uses chemicals, metal alloys, plastics, welds, and bonds that must interact with each other to produce the constant dc source required for Protection Systems, undisturbed by ac system Disturbances.

No type of battery manufactured today for Protection System application is free from problems that can only be detected over time by inspection and test. These problems can arise from variances in the manufacturing process, chemicals and alloys used in the construction of the individual cells, quality of welds and bonds to connect the components, the plastics used to make batteries and the cell forming process for the individual battery cells.

Other problems that require periodic inspection and testing can result from transportation from the factory to the job site, length of time before a charge is put on the battery, the method of installation, the voltage level and duration of equalize charges, the float voltage level used, and the environment that the battery is installed in.

All of the above mentioned factors and several more not discussed here are beyond the control of the Functional Entities that want to use a Performance-Based Protection System Maintenance (PBM) program. These inherent variances in the aging process of a battery cell make establishment of a designated segment based on manufacturer and type of battery impossible.

The whole point of PBM is that if all variables are isolated then common aging and performance criteria would be the same. However, there are too many variables in the electrochemical process to completely isolate all of the performance-changing criteria.

Similarly, Functional Entities that want to establish a condition-based maintenance program using the highest levels of monitoring, resulting in the least amount of hands-on maintenance activity, cannot completely eliminate some periodic maintenance of the battery used in a station dc supply. Inspection of the battery is required on a Maximum Maintenance Interval listed in the tables due to the aging processes of station batteries. However, higher degrees of monitoring of a battery can eliminate the requirement for some periodic testing and some inspections (see Table 1-4).

Please provide an example of the calculations involved in extending maintenance time intervals using PBM.

Entity has 1000 GE-HEA lock-out relays; this is greater than the minimum sample requirement of 60. They start out testing all of the relays within the prescribed Table requirements (6 year max) by testing the relays every 5 years. The entity's plan is to test 200 units per year; this is greater than the minimum sample size requirement of 30. For the sake of example only the following will show 6 failures per year, reality may well have different numbers of failures every year. PBM requires annual assessment of failures found per units tested. After the first year of tests the entity finds 6 failures in the 200 units tested. 6/200= 3% failure rate. This entity is now allowed to extend the maintenance interval if they choose. The entity chooses to extend the maintenance interval of this population segment out to 10 years. This represents a rate of 100 units tested per year; entity selects 100 units to be tested in the following year. After that year of testing these 100 units the entity again finds 6 failed units. 6/100= 6% failures. This entity has now exceeded the acceptable failure rate for these devices and must accelerate testing of all of the units at a higher rate such that the failure rate is found to be less than 4% per year; the entity has three years to get this failure rate down to 4% or less (per year). In response to the 6% failure rate, the entity decreases the testing interval to 8 years. This means that they will now test 125 units per year (1000/8). The entity has just two years left to get the test rate corrected.

After a year, they again find six failures out of the 125 units tested. 6/125= 5% failures. In response to the 5% failure rate, the entity decreases the testing interval to seven years. This means that they will now test 143 units per year (1000/7). The entity has just one year left to get the test rate corrected. After a year, they again find six failures out of the 143 units tested. 6/143= 4.2% failures.

(Note that the entity has tried five years and they were under the 4% limit and they tried seven years and they were over the 4% limit. They must be back at 4% failures or less in the next year so they might simply elect to go back to five years.)

Instead, in response to the 5% failure rate, the entity decreases the testing interval to six years. This means that they will now test 167 units per year (1000/6). After a year, they again find six

failures out of the 167 units tested. 6/167= 3.6% failures. Entity found that they could maintain the failure rate at no more than 4% failures by maintaining the testing interval at six years or less. Entity chose six-year interval and effectively extended their TBM (five years) program by 20%.

A note of practicality is that an entity will probably be in better shape to lengthen the intervals between tests if the failure rate is less than 2%. But the requirements allow for annual adjustments, if the entity desires. As a matter of maintenance management, an ever-changing test rate (units tested/year) may be un-workable.

Note that the "5% of components" requirement effectively sets a practical limit of 20 year maximum PBM interval. Also of note is the "3 years" requirement; an entity might arbitrarily extend time intervals from six years to 20 years. In the event that an entity finds a failure rate greater than 4%, then the test rate must be accelerated such that within three years the failure rate must be brought back down to 4% or less.

Here is a table that demonstrates the values discussed:

Year #	Total Population (P)	Test Interval (I)	Units to be Tested (U= P/I)	# of Failures Found (F)	Failure Rate (=F/U)	Decision to Change Interval Yes or No	Interval Chosen
1	1000	5 yrs	200	6	3%	Yes	10 yrs
2	1000	10 yrs	100	6	6%	Yes	8 yrs
3	1000	8 yrs	125	6	5%	Yes	7 yrs
4	1000	7 yrs	143	6	4.2%	Yes	6 yrs
5	1000	6 yrs	167	6	3.6%	No	6 yrs

Please provide an example of the calculations involved in extending maintenance time intervals using PBM for control circuitry.

Note that the following example captures "Control Circuitry" as all of the trip paths associated with a particular trip coil of a circuit breaker. An entity is not restricted to this method of counting control circuits. Perhaps another method an entity would prefer would be to simply track every individual (parallel) trip path. Or perhaps another method would be to track all of the trip outputs from a specific (set) of relays protecting a specific element. Under the included definition of "component":

The designation of what constitutes a control circuit component is very dependent upon how an entity performs and tracks the testing of the control circuitry. Some entities test their control circuits on a breaker basis whereas others test their circuitry on a local zone of protection basis. Thus, entities are allowed the latitude to designate their own definitions of control circuit components. Another example of where the entity has some discretion on determining what constitutes a single component is the voltage and current sensing devices, where the entity may choose either to designate a full three-phase set of such devices or a single device as a single component.

And in Attachment A (PBM) the definition of Segment:

Segment – *Protection Systems or components of a consistent design standard, or a particular model or type from a single manufacturer that typically share other common elements. Consistent performance is expected across the entire population of a segment. A segment must contain at least sixty (60) individual components.*

Example:

Entity has 1,000 circuit breakers, all of which have two trip coils, for a total of 2,000 trip coils; if all circuitry was designed and built with a consistent (internal entity) standard, then this is greater than the minimum sample requirement of 60.

For the sake of further example, the following facts are given:

Half of all relay panels (500) were built 40 years ago by an outside contractor, consisted of asbestos wrapped 600V-insulation panel wiring, and the cables exiting the control house are THHN pulled in conduit direct to exactly half of all of the various circuit breakers. All of the relay panels and cable pulls were built with consistent standards and consistent performance standard expectations within the segment (which is greater than 60). Each relay panel has redundant microprocessor (MPC) relays (retrofitted); each MPC relay supplies an individual trip output to each of the two trip coils of the assigned circuit breaker.

Approximately 35 years ago, the entity developed their own internal construction crew and now builds all of their own relay panels from parts supplied from vendors that meet the entity's specifications, including SIS 600V insulation wiring and copper-sheathed cabling within the direct conduits to circuit breakers. The construction crew uses consistent standards in the construction. This newer segment of their control circuitry population is different than the original segment, consistent (standards, construction and performance expectations) within the new segment and constitutes the remainder of the entity's population (another 500 panels and the cabling to the remaining 500 circuit breakers). Each relay panel has redundant microprocessor (MPC) relays; each MPC relay supplies an individual trip output to each of the two trip coils of the assigned circuit breaker. Every trip path in this newer segment has a device

that monitors the voltage directly across the trip contacts of the MPC relays and alarms via RTU and SCADA to the operations control room. This monitoring device, when not in alarm, demonstrates continuity all the way through the trip coil, cabling and wiring back to the trip contacts of the MPC relay.

The entity is tracking 2,000 trip coils (each consisting of multiple trip paths) in each of these two segments. But half of all of the trip paths are monitored; therefore, the trip paths are continuously tested and the circuit will alarm when there is a failure. These alarms have to be verified every 12 years for correct operation.

The entity now has 1,000 trip coils (and associated trip paths) remaining that they have elected to count as control circuits. The entity has instituted a process that requires the verification of every trip path to each trip coil (one unit), including the electrical activation of the trip coil. (The entity notes that the trip coils will have to be tripped electrically more often than the trip path verification, and is taking care of this activity through other documentation of Real-time Fault operations.)

They start out testing all of the trip coil circuits within the prescribed Table requirements (12-year max) by testing the trip circuits every 10 years. The entity's plan is to test 100 units per year; this is greater than the minimum sample size requirement of 30. For the sake of example only, the following will show three failures per year; reality may well have different numbers of failures every year. PBM requires annual assessment of failures found per units tested. After the first year of tests, the entity finds three failures in the 100 units tested. 3/100= 3% failure rate.

This entity is now allowed to extend the maintenance interval, if they choose. The entity chooses to extend the maintenance interval of this population segment out to 20 years. This represents a rate of 50 units tested per year; entity selects 50 units to be tested in the following year. After that year of testing these 50 units, the entity again finds three failed units. 3/50= 6% failures.

This entity has now exceeded the acceptable failure rate for these devices and must accelerate testing of all of the units at a higher rate, such that the failure rate is found to be less than 4% per year; the entity has three years to get this failure rate down to 4% or less (per year).

In response to the 6% failure rate, the entity decreases the testing interval to 16 years. This means that they will now test 63 units per year (1000/16). The entity has just two years left to get the test rate corrected. After a year, they again find three failures out of the 63 units tested. 3/63= 4.76% failures.

In response to the >4% failure rate, the entity decreases the testing interval to 14 years. This means that they will now test 72 units per year (1000/14). The entity has just one year left to get the test rate corrected. After a year, they again find three failures out of the 72 units tested. 3/72= 4.2% failures.

(Note that the entity has tried 10 years, and they were under the 4% limit; and they tried 14 years, and they were over the 4% limit. They must be back at 4% failures or less in the next year, so they might simply elect to go back to 10 years.)

Instead, in response to the 4.2% failure rate, the entity decreases the testing interval to 12 years. This means that they will now test 84 units per year (1000/12). After a year, they again find three failures out of the 84 units tested. 3/84= 3.6% failures.

Entity found that they could maintain the failure rate at no more than 4% failures by maintaining the testing interval at 12 years or less. Entity chose 12-year interval, and effectively extended their TBM (10 years) program by 20%.

A note of practicality is that an entity will probably be in better shape to lengthen the intervals between tests if the failure rate is less than 2%. But the requirements allow for annual adjustments if the entity desires. As a matter of maintenance management, an ever-changing test rate (units tested / year) may be un-workable.

Note that the "5% of components" requirement effectively sets a practical limit of 20-year maximum PBM interval. Also of note is the "3 years" requirement; an entity might arbitrarily extend time intervals from six years to 20 years. In the event that an entity finds a failure rate greater than 4%, then the test rate must be accelerated such that within three years the failure rate must be brought back down to 4% or less.

Here is a table that demonstrates the values discussed:

Year #	Total Population (P)	Test Interval (I)	Units to be Tested (U= P/I)	# of Failures Found (F)	Failure Rate (=F/U)	Decision to Change Interval Yes or No	Interval Chosen
1	1000	10 yrs	100	3	3%	Yes	20 yrs
2	1000	20 yrs	50	3	6%	Yes	16yrs
3	1000	16 yrs	63	3	4.8%	Yes	14 yrs
4	1000	14 yrs	72	3	4.2%	Yes	12 yrs
5	1000	12 yrs	84	3	3.6%	No	12 yrs

Please provide an example of the calculations involved in extending maintenance time intervals using PBM for voltage and current sensing devices.

Note that the following example captures "voltage and current inputs to the protective relays" as all of the various current transformer and potential transformer signals associated with a particular set of relays used for protection of a specific Element. This entity calls this set of protective relays a "Relay Scheme." Thus, this entity chooses to count PT and CT signals as a group instead of individually tracking maintenance activities to specific bushing CT's or specific PT's. An entity is not restricted to this method of counting voltage and current devices, signals and paths. Perhaps another method an entity would prefer would be to simply track every individual PT and CT. Note that a generation maintenance group may well select the latter because they may elect to perform routine off-line tests during generator outages, whereas a transmission maintenance group might create a process that utilizes Real-time system values measured at the relays. Under the included definition of "component":

The designation of what constitutes a control circuit component is very dependent upon how an entity performs and tracks the testing of the control circuitry. Some entities test their control circuits on a breaker basis whereas others test their circuitry on a local zone of protection basis. Thus, entities are allowed the latitude to designate their own definitions of control circuit components. Another example of where the entity has some discretion on determining what constitutes a single component is the voltage and current sensing devices, where the entity may choose either to designate a full three-phase set of such devices or a single device as a single component.

And in Attachment A (PBM) the definition of Segment:

Segment – *Protection Systems or components of a consistent design standard, or a particular model or type from a single manufacturer that typically share other common elements. Consistent performance is expected across the entire population of a segment. A segment must contain at least sixty (60) individual components.*

Example:

Entity has 2000 "Relay Schemes," all of which have three current signals supplied from bushing CTs, and three voltage signals supplied from substation bus PT's. All cabling and circuitry was designed and built with a consistent (internal entity) standard, and this population is greater than the minimum sample requirement of 60.

For the sake of further example the following facts are given:

Half of all relay schemes (1,000) are supplied with current signals from ANSI STD C800 bushing CTs and voltage signals from PTs built by ACME Electric MFR CO. All of the relay panels and cable pulls were built with consistent standards, and consistent performance standard expectations exist for the consistent wiring, cabling and instrument transformers within the segment (which is greater than 60).

The other half of the entity's relay schemes have MPC relays with additional monitoring built-in that compare DNP values of voltages and currents (or Watts and VARs), as interpreted by the MPC relays and alarm for an entity-accepted tolerance level of accuracy. This newer segment of their "Voltage and Current Sensing" population is different than the original segment, consistent (standards, construction and performance expectations) within the new segment and constitutes the remainder of the entity's population.

The entity is tracking many thousands of voltage and current signals within 2,000 relay schemes (each consisting of multiple voltage and current signals) in each of these two segments. But half of all of the relay schemes voltage and current signals are monitored; therefore, the voltage and current signals are continuously tested and the circuit will alarm when there is a failure; these alarms have to be verified every 12 years for correct operation.

The entity now has 1,000 relay schemes worth of voltage and current signals remaining that they have elected to count within their relay schemes designation. The entity has instituted a process that requires the verification of these voltage and current signals within each relay scheme (one unit).

(Please note - a problem discovered with a current or voltage signal found at the relay could be caused by anything from the relay, all the way to the signal source itself. Having many sources of problems can easily increase failure rates beyond the rate of failures of just one item (for example just PTs). It is the intent of the SDT to minimize failure rates of all of the equipment to an acceptable level; thus, any failure of any item that gets the signal from source to relay is counted. It is for this reason that the SDT chose to set the boundary at the ability of the signal to be delivered all the way to the relay.

The entity will start out measuring all of the relay scheme voltage and currents at the individual relays within the prescribed Table requirements (12 year max) by measuring the voltage and current values every 10 years. The entity's plan is to test 100 units per year; this is greater than the minimum sample size requirement of 30. For the sake of example only, the following will show three failures per year; reality may well have different numbers of failures every year. PBM requires annual assessment of failures found per units tested. After the first year of tests, the entity finds three failures in the 100 units tested. 3/100= 3% failure rate.

This entity is now allowed to extend the maintenance interval, if they choose. The entity chooses to extend the maintenance interval of this population segment out to 20 years. This represents a rate of 50 units tested per year; entity selects 50 units to be tested in the following year. After that year of testing these 50 units, the entity again finds three failed units. 3/50= 6% failures.

This entity has now exceeded the acceptable failure rate for these devices and must accelerate testing of all of the units at a higher rate, such that the failure rate is found to be less than 4% per year; the entity has three years to get this failure rate down to 4% or less (per year).

In response to the 6% failure rate, the entity decreases the testing interval to 16 years. This means that they will now test 63 units per year (1000/16). The entity has just two years left to get the test rate corrected. After a year, they again find three failures out of the 63 units tested. 3/63= 4.76% failures.

In response to the >4%failure rate, the entity decreases the testing interval to 14 years. This means that they will now test 72 units per year (1000/14). The entity has just one year left to get the test rate corrected. After a year, they again find three failures out of the 72 units tested. 3/72= 4.2% failures.

(Note that the entity has tried 10 years, and they were under the 4% limit; and they tried 14 years, and they were over the 4% limit. They must be back at 4% failures or less in the next year, so they might simply elect to go back to 10 years.)

Instead, in response to the 4.2% failure rate, the entity decreases the testing interval to 12 years. This means that they will now test 84 units per year (1,000/12). After a year, they again find three failures out of the 84 units tested. 3/84= 3.6% failures.

Entity found that they could maintain the failure rate at no more than 4% failures by maintaining the testing interval at 12 years or less. Entity chose 12-year interval and effectively extended their TBM (10 years) program by 20%.

A note of practicality is that an entity will probably be in better shape to lengthen the intervals between tests if the failure rate is less than 2%. But the requirements allow for annual adjustments, if the entity desires. As a matter of maintenance management, an ever-changing test rate (units tested/year) may be un-workable.

Note that the "5% of components" requirement effectively sets a practical limit of 20-year maximum PBM interval. Also of note is the "3 years" requirement; an entity might arbitrarily extend time intervals from six years to 20 years. In the event that an entity finds a failure rate greater than 4%, then the test rate must be accelerated such that within three years the failure rate must be brought back down to 4% or less.

Here is a table that demonstrates the values discussed:

Year #	Total Population (P)	Test Interval (I)	Units to be Tested (U= P/I)	# of Failures Found (F)	Failure Rate (=F/U)	Decision to Change Interval Yes or No	Interval Chose
1	1000	10 yrs	100	3	3%	Yes	20 yrs
2	1000	20 yrs	50	3	6%	Yes	16yrs
3	1000	16 yrs	63	3	4.8%	Yes	14 yrs
4	1000	14 yrs	72	3	4.2%	Yes	12 yrs
5	1000	12 yrs	84	3	3.6%	No	12 yrs

10. Overlapping the Verification of Sections of the Protection System

Tables 1-1 through 1-5 require that every Protection System component be periodically verified. One approach, but not the only method, is to test the entire protection scheme as a unit, from the secondary windings of voltage and current sources to breaker tripping. For practical ongoing verification, sections of the Protection System may be tested or monitored individually. The boundaries of the verified sections must overlap to ensure that there are no gaps in the verification. See Appendix A of this Supplementary Reference for additional discussion on this topic.

All of the methodologies expressed within this report may be combined by an entity, as appropriate, to establish and operate a maintenance program. For example, a Protection System may be divided into multiple overlapping sections with a different maintenance methodology for each section:

- Time-based maintenance with appropriate maximum verification intervals for categories of equipment, as given in the Tables 1-1 through 1-5;
- Monitoring as described in Tables 1-1 through 1-5;
- A Performance-Based Maintenance program as described in Section 9 above, or Attachment A of the standard;
- Opportunistic verification using analysis of Fault records, as described in Section 11

10.1 Frequently Asked Questions:

My system has alarms that are gathered once daily through an auto-polling system; this is not really a conventional SCADA system but does it meet the Table 1 requirements for inclusion as a monitored system?

Yes, provided the auto-polling that gathers the alarms reports those alarms to a location where the action can be initiated to correct the Unresolved Maintenance Issue. This location does not have to be the location of the engineer or the technician that will eventually repair the problem, but rather a location where the action can be initiated.

11. Monitoring by Analysis of Fault Records

Many users of microprocessor relays retrieve Fault event records and oscillographic records by data communications after a Fault. They analyze the data closely if there has been an apparent Misoperation, as NERC standards require. Some advanced users have commissioned automatic Fault record processing systems that gather and archive the data. They search for evidence of component failures or setting problems hidden behind an operation whose overall outcome seems to be correct. The relay data may be augmented with independently captured Digital Fault Recorder (DFR) data retrieved for the same event.

Fault data analysis comprises a legitimate CBM program that is capable of reducing the need for a manual time-interval based check on Protection Systems whose operations are analyzed. Even electromechanical Protection Systems instrumented with DFR channels may achieve some CBM benefit. The completeness of the verification then depends on the number and variety of Faults in the vicinity of the relay that produce relay response records and the specific data captured.

A typical Fault record will verify particular parts of certain Protection Systems in the vicinity of the Fault. For a given Protection System installation, it may or may not be possible to gather within a reasonable amount of time an ensemble of internal and external Fault records that completely verify the Protection System.

For example, Fault records may verify that the particular relays that tripped are able to trip via the control circuit path that was specifically used to clear that Fault. A relay or DFR record may indicate correct operation of the protection communications channel. Furthermore, other nearby Protection Systems may verify that they restrain from tripping for a Fault just outside their respective zones of protection. The ensemble of internal Fault and nearby external Fault event data can verify major portions of the Protection System, and reset the time clock for the Table 1 testing intervals for the verified components only.

What can be shown from the records of one operation is very specific and limited. In a panel with multiple relays, only the specific relay(s) whose operation can be observed without ambiguity should be used. Be careful about using Fault response data to verify that settings or calibration are correct. Unless records have been captured for multiple Faults close to either side of a setting boundary, setting or calibration could still be incorrect.

PMU data, much like DME data, can be utilized to prove various components of the Protection System. Obviously, care must be taken to attribute proof only to the parts of a Protection System that can actually be proven using the PMU or DME data.

If Fault record data is used to show that portions or all of a Protection System have been verified to meet Table 1 requirements, the owner must retain the Fault records used, and the maintenance-related conclusions drawn from this data and used to defer Table 1 tests, for at least the retention time interval given in Section 8.2.

11.1 Frequently Asked Questions:

I use my protective relays for Fault and Disturbance recording, collecting oscillographic records and event records via communications for Fault analysis to meet NERC and DME requirements. What are the maintenance requirements for the relays?

For relays used only as Disturbance Monitoring Equipment, NERC Standard PRC-018-1 R3 & R6 states the maintenance requirements and is being addressed by a standards activity that is revising PRC-002-1 and PRC-018-1. For protective relays "that are designed to provide protection for the BES," this standard applies, even if they also perform DME functions.

12. Importance of Relay Settings in Maintenance Programs

In manual testing programs, many utilities depend on pickup value or zone boundary tests to show that the relays have correct settings and calibration. Microprocessor relays, by contrast, provide the means for continuously monitoring measurement accuracy. Furthermore, the relay digitizes inputs from one set of signals to perform all measurement functions in a single self-monitoring microprocessor system. These relays do not require testing or calibration of each setting.

However, incorrect settings may be a bigger risk with microprocessor relays than with older relays. Some microprocessor relays have hundreds or thousands of settings, many of which are critical to Protection System performance.

Monitoring does not check measuring element settings. Analysis of Fault records may or may not reveal setting problems. To minimize risk of setting errors after commissioning, the user should enforce strict settings data base management, with reconfirmation (manual or automatic) that the installed settings are correct whenever maintenance activity might have changed them; for background and guidance, see [5] in References.

Table 1 requires that settings must be verified to be as specified. The reason for this requirement is simple: With legacy relays (non-microprocessor protective relays), it is necessary to know the value of the intended setting in order to test, adjust and calibrate the relay. Proving that the relay works per specified setting was the de facto procedure. However, with the advanced microprocessor relays, it is possible to change relay settings for the purpose of verifying specific functions and then neglect to return the settings to the specified values. While there is no specific requirement to maintain a settings management process, there remains a need to verify that the settings left in the relay are the intended, specified settings. This need may manifest itself after any of the following:

- One or more settings are changed for any reason.
- A relay fails and is repaired or replaced with another unit.
- A relay is upgraded with a new firmware version.

12.1 Frequently Asked Questions:

How do I approach testing when I have to upgrade firmware of a microprocessor relay?

The entity should ensure that the relay continues to function properly after implementation of firmware changes. Some entities may have a R&D department that might routinely run acceptance tests on devices with firmware upgrades before allowing the upgrade to be installed. Other entities may rely upon the vigorous testing of the firmware OEM. An entity has the latitude to install devices and/or programming that they believe will perform to their satisfaction. If an entity should choose to perform the maintenance activities specified in the Tables following a firmware upgrade, then they may, if they choose, reset the time clock on that set of maintenance activities so that they would not have to repeat the maintenance on its

regularly scheduled cycle. (However, for simplicity in maintenance schedules, some entities may choose to not reset this time clock; it is merely a suggested option.)

If I upgrade my old relays, then do I have to maintain my previous equipment maintenance documentation?

If an equipment item is repaired or replaced, then the entity can restart the maintenance-activity-time-interval-clock, if desired; however, the replacement of equipment does not remove any documentation requirements. The requirements in the standard are intended to ensure that an entity has a maintenance plan, and that the entity adheres to minimum activities and maximum time intervals. The documentation requirements are intended to help an entity demonstrate compliance. For example, saving the dates and records of the last two maintenance activities is intended to demonstrate compliance with the interval. Therefore, if you upgrade or replace equipment, then you still must maintain the documentation for the previous equipment, thus demonstrating compliance with the time interval requirement prior to the replacement action.

We have a number of installations where we have changed our Protection System components. Some of the changes were upgrades, but others were simply system rating changes that merely required taking relays "out-of-service". What are our responsibilities when it comes to "out-of-service" devices?

Assuming that your system up-rates, upgrades and overall changes meet any and all other requirements and standards, then the requirements of PRC-005-2 are simple – if the Protection System component performs a Protection System function, then it must be maintained. If the component no longer performs Protection System functions, then it does not require maintenance activities under the Tables of PRC-005-2. While many entities might physically remove a component that is no longer needed, there is no requirement in PRC-005-2 to remove such component(s). Obviously, prudence would dictate that an "out-of-service" device is truly made inactive. There are no record requirements listed in PRC-005-2 for Protection System components not used.

While performing relay testing of a protective device on our Bulk Electric System, it was discovered that the protective device being tested was either broken or out of calibration. Does this satisfy the relay testing requirement, even though the protective device tested bad, and may be unable to be placed back into service?

Yes, PRC-005-2 requires entities to perform relay testing on protective devices on a given maintenance cycle interval. By performing this testing, the entity has satisfied PRC-005-2 requirement, although the protective device may be unable to be returned to service under normal calibration adjustments. R5 states:

"R5. Each Transmission Owner, Generator Owner, and Distribution Provider shall demonstrate efforts to correct any identified Unresolved Maintenance Issues."

Also, when a failure occurs in a Protection System, power system security may be comprised, and notification of the failure must be conducted in accordance with relevant NERC standards.

If I show the protective device out of service while it is being repaired, then can I add it back as a new protective device when it returns? If not, my relay testing history would show that I was out of compliance for the last maintenance cycle.

The maintenance and testing requirements (R5) state "…shall demonstrate efforts to correct any identified Unresolved Maintenance Issues..." The type of corrective activity is not stated; however, it could include repairs or replacements.

Your documentation requirements will increase, of course, to demonstrate that your device tested bad and had corrective actions initiated. Your regional entity might ask about the status of your corrective actions.

13. Self-Monitoring Capabilities and Limitations

Microprocessor relay proponents have cited the self-monitoring capabilities of these products for nearly 20 years. Theoretically, any element that is monitored does not need a periodic manual test. A problem today is that the community of manufacturers and users has not created clear documentation of exactly what is and is not monitored. Some unmonitored but critical elements are buried in installed systems that are described as self-monitoring.

To utilize the extended time intervals allowed by monitoring, the user must document that the monitoring attributes of the device match the minimum requirements listed in the Table 1.

Until users are able to document how all parts of a system which are required for the protective functions are monitored or verified (with help from manufacturers), they must continue with the unmonitored intervals established in Table 1 and Table 3.

Going forward, manufacturers and users can develop mappings of the monitoring within relays, and monitoring coverage by the relay of user circuits connected to the relay terminals.

To enable the use of the most extensive monitoring (and never again have a hands-on maintenance requirement), the manufacturers of the microprocessor-based self-monitoring components in the Protection System should publish for the user a document or map that shows:

- How all internal elements of the product are monitored for any failure that could impact Protection System performance.
- Which connected circuits are monitored by checks implemented within the product; how to connect and set the product to assure monitoring of these connected circuits; and what circuits or potential problems are not monitored.

This manufacturer's information can be used by the registered entity to document compliance of the monitoring attributes requirements by:

- Presenting or referencing the product manufacturer's documents.
- Explaining in a system design document the mapping of how every component and circuit that is critical to protection is monitored by the microprocessor product(s) or by other design features.
- Extending the monitoring to include the alarm transmission Facilities through which failures are reported within a given time frame to allocate where action can be taken to initiate resolution of the alarm attributed to an Unresolved Maintenance Issue, so that failures of monitoring or alarming systems also lead to alarms and action.
- Documenting the plans for verification of any unmonitored components according to the requirements of Table 1 and Table 3.

13.1 Frequently Asked Questions:

I can't figure out how to demonstrate compliance with the requirements for the highest level of monitoring of Protection Systems. Why does this Maintenance Standard describe a maintenance program approach I cannot achieve?

Demonstrating compliance with the requirements for the highest level of monitoring any particular component of Protection Systems is likely to be very involved, and may include detailed manufacturer documentation of complete internal monitoring within a device, comprehensive design drawing reviews, and other detailed documentation. This standard does not presume to specify what documentation must be developed; only that it must be documented.

There may actually be some equipment available that is capable of meeting these highest levels of monitoring criteria, in which case it may be maintained according to the highest level of monitoring shown on the Tables. However, even if there is no equipment available today that can meet this level of monitoring, the standard establishes the necessary requirements for when such equipment becomes available.

By creating a roadmap for development, this provision makes the standard technology-neutral. The Standard Drafting Team wants to avoid the need to revise the standard in a few years to accommodate technology advances that may be coming to the industry.

14. Notification of Protection System Failures

When a failure occurs in a Protection System, power system security may be compromised, and notification of the failure must be conducted in accordance with relevant NERC standard(s). Knowledge of the failure may impact the system operator's decisions on acceptable Loading conditions.

This formal reporting of the failure and repair status to the system operator by the Protection System owner also encourages the system owner to execute repairs as rapidly as possible. In some cases, a microprocessor relay or carrier set can be replaced in hours; wiring termination failures may be repaired in a similar time frame. On the other hand, a component in an electromechanical or early-generation electronic relay may be difficult to find and may hold up repair for weeks. In some situations, the owner may have to resort to a temporary protection panel, or complete panel replacement.

15. Maintenance Activities

Some specific maintenance activities are a requirement to ensure reliability. An example would be that a BES entity could be prudent in its protective relay maintenance, but if its battery maintenance program is lacking, then reliability could still suffer. The NERC glossary outlines a Protection System as containing specific components. PRC-005-2 requires specific maintenance activities be accomplished within a specific time interval. As noted previously, higher technology equipment can contain integral monitoring capability that actually performs maintenance verification activities routinely and often; therefore, *manual intervention* to perform certain activities on these type components may not be needed.

15.1 Protective Relays (Table 1-1)

These relays are defined as the devices that receive the input signal from the current and voltage sensing devices and are used to isolate a Faulted Element of the BES. Devices that sense thermal, vibration, seismic, pressure, gas, or any other non-electrical inputs are excluded.

Non-microprocessor based equipment is treated differently than microprocessor-based equipment in the following ways; the relays should meet the asset owners' tolerances:

- Non-microprocessor devices must be tested with voltage and/or current applied to the device.
- Microprocessor devices may be tested through the integral testing of the device.
    - There is no specific protective relay commissioning test or relay routine test mandated.
    - There is no specific documentation mandated.

15.1.1 Frequently Asked Questions:

What calibration tolerance should be applied on electromechanical relays?

Each entity establishes their own acceptable tolerances when applying protective relaying on their system. For some Protection System components, adjustment is required to bring measurement accuracy within the parameters established by the asset owner based on the specific application of the component. A calibration failure is the result if testing finds the specified parameters to be out of tolerance.

15.2 Voltage & Current Sensing Devices (Table 1-3)

These are the current and voltage sensing devices, usually known as instrument transformers. There is presently a technology available (fiber-optic Hall-effect) that does not utilize conventional transformer technology; these devices and other technologies that produce quantities that represent the primary values of voltage and current are considered to be a type of voltage and current sensing devices included in this standard.

The intent of the maintenance activity is to verify the input to the protective relay from the device that produces the current or voltage signal sample.

There is no specific test mandated for these components. The important thing about these signals is to know that the expected output from these components actually reaches the

protective relay. Therefore, the proof of the proper operation of these components also demonstrates the integrity of the wiring (or other medium used to convey the signal) from the current and voltage sensing device, all the way to the protective relay. The following observations apply:

- There is no specific ratio test, routine test or commissioning test mandated.
- There is no specific documentation mandated.
- It is required that the signal be present at the relay.
- This expectation can be arrived at from any of a number of means; including, but not limited to, the following: By calculation, by comparison to other circuits, by commissioning tests, by thorough inspection, or by any means needed to verify the circuit meets the asset owner's Protection System maintenance program.
- An example of testing might be a saturation test of a CT with the test values applied at the relay panel; this, therefore, tests the CT, as well as the wiring from the relay all the back to the CT.
- Another possible test is to measure the signal from the voltage and/or current sensing devices, during Load conditions, at the input to the relay.
- Another example of testing the various voltage and/or current sensing devices is to query the microprocessor relay for the Real-time Loading; this can then be compared to other devices to verify the quantities applied to this relay. Since the input devices have supplied the proper values to the protective relay, then the verification activity has been satisfied. Thus, event reports (and oscillographs) can be used to verify that the voltage and current sensing devices are performing satisfactorily.
- Still another method is to measure total watts and vars around the entire bus; this should add up to zero watts and zero vars, thus proving the voltage and/or current sensing devices system throughout the bus.
- Another method for proving the voltage and/or current-sensing devices is to complete commissioning tests on all of the transformers, cabling, fuses and wiring.
- Any other method that verifies the input to the protective relay from the device that produces the current or voltage signal sample.

15.2.1 Frequently Asked Questions:

What is meant by "…verify the current and voltage circuit inputs from the voltage and current sensing devices to the protective relays …" Do we need to perform ratio, polarity and saturation tests every few years?

No. You must verify that the protective relay is receiving the expected values from the voltage and current-sensing devices (typically voltage and current transformers). This can be as difficult as is proposed by the question (with additional testing on the cabling and substation wiring to ensure that the values arrive at the relays); or simplicity can be achieved by other verification methods. While some examples follow, these are not intended to represent an all-inclusive list; technology advances and ingenuity should not be excluded from making comparisons and verifications:

- Compare the secondary values, at the relay, to a metering circuit, fed by different current transformers, monitoring the same line as the questioned relay circuit.
- Compare the individual phase secondary values at the relay panel (with additional testing on the panel wiring to ensure that the values arrive at those relays) with the other phases, and verify that residual currents are within expected bounds.
- Observe all three phase currents and the residual current at the relay panel with an oscilloscope, observing comparable magnitudes and proper phase relationship, with additional testing on the panel wiring to ensure that the values arrive at the relays.
- Compare the values, as determined by the questioned relay (such as, but not limited to, a query to the microprocessor relay) to another protective relay monitoring the same line, with currents supplied by different CTs.
- Compare the secondary values, at the relay with values measured by test instruments (such as, but not limited to multi-meters, voltmeter, clamp-on ammeters, etc.) and verified by calculations and known ratios to be the values expected. For example, a single PT on a 100KV bus will have a specific secondary value that, when multiplied by the PT ratio, arrives at the expected bus value of 100KV.
- Query SCADA for the power flows at the far end of the line protected by the questioned relay, compare those SCADA values to the values as determined by the questioned relay.
- Totalize the Watts and VARs on the bus and compare the totals to the values as seen by the questioned relay.

The point of the verification procedure is to ensure that all of the individual components are functioning properly; and that an ongoing proactive procedure is in place to re-check the various components of the protective relay measuring Systems.

Is wiring insulation or hi-pot testing required by this Maintenance Standard?

No, wiring insulation and equipment hi-pot testing are not specifically required by the Maintenance Standard. However, if the method of verifying CT and PT inputs to the relay involves some other method than actual observation of current and voltage transformer secondary inputs to the relay, it might be necessary to perform some sort of cable integrity test to verify that the instrument transformer secondary signals are actually making it to the relay

and not being shunted off to ground. For instance, you could use CT excitation tests and PT turns ratio tests and compare to baseline values to verify that the instrument transformer outputs are acceptable. However, to conclude that these acceptable transformer instrument output signals are actually making it to the relay inputs, it also would be necessary to verify the insulation of the wiring between the instrument transformer and the relay.

My plant generator and transformer relays are electromechanical and do not have metering functions, as do microprocessor- based relays. In order for me to compare the instrument transformer inputs to these relays to the secondary values of other metered instrument transformers monitoring the same primary voltage and current signals, it would be necessary to temporarily connect test equipment, like voltmeters and clamp on ammeters, to measure the input signals to the relays. This practice seems very risky, and a plant trip could result if the technician were to make an error while measuring these current and voltage signals. How can I avoid this risk? Also, what if no other instrument transformers are available which monitor the same primary voltage or current signal?

Comparing the input signals to the relays to the outputs of other independent instrument transformers monitoring the same primary current or voltage is just one method of verifying the instrument transformer inputs to the relays, but is not required by the standard. Plants can choose how to best manage their risk. If online testing is deemed too risky, offline tests, such as, but not limited to, CT excitation test and PT turns ratio tests can be compared to baseline data and be used in conjunction with CT and PT secondary wiring insulation verification tests to adequately "verify the current and voltage circuit inputs from the voltage and current sensing devices to the protective relays …" while eliminating the risk of tripping an in service generator or transformer. Similarly, this same offline test methodology can be used to verify the relay input voltage and current signals to relays when there are no other instrument transformers monitoring available for purposes of signal comparison.

15.3 Control circuitry associated with protective functions (Table 1-5)

This component of Protection Systems includes the trip coil(s) of the circuit breaker, circuit switcher or any other interrupting device. It includes the wiring from the batteries to the relays. It includes the wiring (or other signal conveyance) from every trip output to every trip coil. It includes any device needed for the correct processing of the needed trip signal to the trip coil of the interrupting device; this requirement is meant to capture inputs and outputs to and from a protective relay that are necessary for the correct operation of the protective functions. In short, every trip path must be verified; the method of verification is optional to the asset owner. An example of testing methods to accomplish this might be to verify, with a volt-meter, the existence of the proper voltage at the open contacts, the open circuited input circuit and at the trip coil(s). As every parallel trip path has similar failure modes, each trip path from relay to trip coil must be verified. Each trip coil must be tested to trip the circuit breaker (or other interrupting device) at least once. There is a requirement to operate the circuit breaker (or other interrupting device) at least once every six years as part of the complete functional test. If a suitable monitoring system is installed that verifies every parallel trip path, then the manual-intervention testing of those parallel trip paths can be eliminated; however, the actual operation of the circuit breaker must still occur at least once every six years. This six-year tripping requirement can be completed as easily as tracking the Real-time Fault-clearing operations on the circuit breaker, or tracking the trip coil(s) operation(s) during circuit breaker routine maintenance actions.

The circuit-interrupting device should not be confused with a motor-operated disconnect. The intent of this standard is to require maintenance intervals and activities on Protection Systems equipment, and not just all system isolating equipment.

It is necessary, however, to classify a device that actuates a high-speed auto-closing ground switch as an interrupting device, if this ground switch is utilized in a Protection System and forces a ground Fault to occur that then results in an expected Protection System operation to clear the forced ground Fault. The SDT believes that this is essentially a transferred-tripping device without the use of communications equipment. If this high-speed ground switch is "…designed to provide protection for the BES…" then this device needs to be treated as any other Protection System component. The control circuitry would have to be tested within 12 years, and any electromechanically operated device will have to be tested every six years. If the spring-operated ground switch can be disconnected from the solenoid triggering unit, then the solenoid triggering unit can easily be tested without the actual closing of the ground blade.

The dc control circuitry also includes each auxiliary tripping relay (94) and each lock-out relay (86) that may exist in any particular trip scheme. If the lock-out relays (86) are electromechanical type components, then they must be trip tested. The PSMT SDT considers these components to share some similarities in failure modes as electromechanical protective relays; as such, there is a six-year maximum interval between mandated maintenance tasks unless PBM is applied.

Contacts of the 86 and/or 94 that pass the trip current on to the circuit interrupting device trip coils will have to be checked as part of the 12 year requirement. Contacts of the 86 and/or 94 lock relay that operate non-BES interrupting devices are not required. Normally-open contacts that are not used to pass a trip signal and normally-closed contacts do not have to be verified. Verification of the tripping paths is the requirement.

While relays that do not respond to electrical quantities are presently excluded from this standard, their control circuits are included if the relay is installed to detect Faults on BES Elements. Thus, the control circuit of a BES transformer sudden pressure relay should be verified every 12 years, assuming its integrity is not monitored. While a sudden pressure relay control circuit is included within the scope of PRC-005-2, other alarming relay control circuits, (i.e., SF-6 low gas) are not included, even though they may trip the breaker being monitored.

New technology is also accommodated here; there are some tripping systems that have replaced the traditional hard-wired trip circuitry with other methods of trip-signal conveyance such as fiber-optics. It is the intent of the PSMT SDT to include this, and any other, technology that is used to convey a trip signal from a protective relay to a circuit breaker (or other interrupting device) within this category of equipment. The requirement for these systems is verification of the tripping path.

Monitoring of the control circuit integrity allows for no maintenance activity on the control circuit (excluding the requirement to operate trip coils and electromechanical lockout and/or tripping auxiliary relays). Monitoring of integrity means to monitor for continuity and/or presence of voltage on each trip path. For Ethernet or fiber-optic control systems, monitoring of integrity means to monitor communication ability between the relay and the circuit breaker.

The trip path from a sudden pressure device is a part of the Protection System control circuitry. The sensing element is omitted from PRC-005-2 testing requirements because the SDT is unaware of industry-recognized testing protocol for the sensing elements. The SDT believes

that Protection Systems that trip (or can trip) the BES should be included. This position is consistent with the currently-approved PRC-005-1, consistent with the SAR for Project 2007-17, and understands this to be consistent with the position of FERC staff.

15.3.1 Frequently Asked Questions:

Is it permissible to verify circuit breaker tripping at a different time (and interval) than when we verify the protective relays and the instrument transformers?

Yes, provided the entire Protective System is tested within the individual component's maximum allowable testing intervals.

The Protection System Maintenance Standard describes requirements for verifying the tripping of circuit breakers. What is this telling me about maintenance of circuit breakers?

Requirements in PRC-005-2 are intended to verify the integrity of tripping circuits, including the breaker trip coil, as well as the presence of auxiliary supply (usually a battery) for energizing the trip coil if a protection function operates. Beyond this, PRC-005-2 sets no requirements for verifying circuit breaker performance, or for maintenance of the circuit breaker.

How do I test each dc Control Circuit trip path, as established in Table 1-5 "Protection System Control Circuitry (Trip coils and auxiliary relays)"?

Table 1-5 specifies that each breaker trip coil and lockout relays that carry trip current to a trip coil must be operated within the specified time period. The required operations may be via targeted maintenance activities, or by documented operation of these devices for other purposes such as Fault clearing.

Are high-speed ground switch trip coils included in the dc control circuitry?

Yes. PRC-005-2 includes high-speed grounding switch trip coils within the dc control circuitry to the degree that the initiating Protection Systems are characterized as "transmission Protection Systems."

Does the control circuitry and trip coil of a non-BES breaker, tripped via a BES protection component, have to be tested per Table 1.5? (Refer to Table 3 for examples 1 and 2)Example 1: A non-BES circuit breaker that is tripped via a Protection System to which PRC-005-2 applies might be (but is not limited to) a 12.5KV circuit breaker feeding (non-black-start) radial Loads but has a trip that originates from an under-frequency (81) relay.

- The relay must be verified.
- The voltage signal to the relay must be verified.
- All of the relevant dc supply tests still apply.
- .
- ~~All of the relevant communication system tests still apply.~~
- The unmonitored trip circuit between the relay and any lock-out or auxiliary relay must be verified every 12 years.
- The unmonitored trip circuit between the lock-out (or auxiliary relay) and the non-BES breaker does not have to be proven with an electrical trip.

- In the case where there is no lock-out or auxiliary tripping relay used, the trip circuit to the non-BES breaker does not have to be proven with an electrical trip.
- The trip coil of the non-BES circuit breaker does not have to be individually proven with an electrical trip.

Example 2: A Transmission Owner may have a non-BES breaker that is tripped via a Protection System to which PRC-005-2 applies, which may be (but is not limted to) a 13.8 KV circuit breaker feeding (non-black-start) radial Loads but has a trip that originates from a BES 115KV line relay.

- The relay must be verified
- The voltage signal to the relay must be verified
- All of the relevant dc supply tests still apply
-
- ~~All of the relevant communication system tests still apply~~
- The unmonitored trip circuit between the relay and any lock-out (86) or auxiliary (94) relay must be verified every 12 years
- The unmonitored trip circuit between the lock-out (86) (or auxiliary (94)) relay and the non-BES breaker does not have to be proven with an electrical trip
- In the case where there is no lockout (86) or auxiliary (94) tripping relay used, the trip circuit to the non-BES breaker does not have to be proven with an electrical trip.
- The trip coil of the non-BES circuit breaker does not have to be individually proven with an electrical trip

Example 3: A Generator Owner may have an non-BES circuit breaker that is tripped via a Protection System to which PRC-005-2 applies, such as the generator field breaker and low-side breakers on station service/excitation transformers connected to the generator bus.

Trip testing of the generator field breaker and low side station service/excitation transformer breaker(s) via lockout or auxiliairy tripping relays are not required since these breakers may be associated with radially fed loads and are not considered to be BES breakers. An example of an otherwise non-BES circuit breaker that is tripped via a BES protection component might be (but is not limited to) a 6.9kV station service transformer source circuit breaker but has a trip that originates from a generator differential (87) relay.

- The differential relay must be verified.
- The current signals to the relay must be verified.
- All of the relevant dc supply tests still apply.
- The unmonitored trip circuit between the relay and any lock-out or auxiliary relay must be verified every 12 years.
- The unmonitored trip circuit between the lock-out (or auxiliary relay) and the non-BES breaker does not have to be proven with an electrical trip.
- In the case where there is no lock-out or auxiliary tripping relay used, the trip circuit to the non-BES breaker does not have to be proven with an electrical trip.
- The trip coil of the non-BES circuit breaker does not have to be individually proven with an electrical trip.

However, it is very prudent to verify the tripping of such breakers~~reakers~~ for the integrity of the overall generation plant.

Do I have to verify operation of breaker "a" contacts or any other normally closed auxiliary contacts in the trip path of each breaker as part of my control circuit test?

Operation of normally-closed contacts does not have to be verified. Verification of the tripping paths is the requirement. The continuity of the normally closed contacts will be verified when the tripping path is verified.

15.4 Batteries and DC Supplies (Table 1-4)

The NERC definition of a Protection System is:

- Protective relays which respond to electrical quantities,
- Communications Systems necessary for correct operation of protective functions,
- Voltage and current sensing devices providing inputs to protective relays,
- Station dc supply associated with protective functions (including station batteries, battery chargers, and non-battery-based dc supply), and
- Control circuitry associated with protective functions through the trip coil(s) of the circuit breakers or other interrupting devices.

The station battery is not the only component that provides dc power to a Protection System. In the new definition for Protection System, "station batteries" are replaced with "station dc supply" to make the battery charger and dc producing stored energy devices (that are not a battery) part of the Protection System that must be maintained.

The PSMT SDT recognizes that there are several technological advances in equipment and testing procedures that allow the owner to choose how to verify that a battery string is free of open circuits. The term "continuity" was introduced into the standard to allow the owner to choose how to verify continuity of a battery set by various methods, and not to limit the owner to other conventional methods of showing continuity. Continuity, as used in Table 1-4 of the standard, refers to verifying that there is a continuous current path from the positive terminal of the station battery set to the negative terminal. Without verifying continuity of a station battery, there is no way to determine that the station battery is available to supply dc power to the station. An open battery string will be an unavailable power source in the event of loss of the battery charger.

Batteries cannot be a unique population segment of a Performance-Based Maintenance Program (PBM) because there are too many variables in the electrochemical process to completely isolate all of the performance-changing criteria necessary for using PBM on battery Systems. However, nothing precludes the use of a PBM process for any other part of a dc supply besides the batteries themselves.

15.4.1 Frequently Asked Questions:

What constitutes the station dc supply, as mentioned in the definition of Protective System?

The previous definition of Protection System includes batteries, but leaves out chargers. The latest definition includes chargers, as well as dc systems that do not utilize batteries. This

revision of PRC-005-2 is intended to capture these devices that were not included under the previous definition. The station direct current (dc) supply normally consists of two components: the battery charger and the station battery itself. There are also emerging technologies that provide a source of dc supply that does not include either a battery or charger.

Battery Charger - The battery charger is supplied by an available ac source. At a minimum, the battery charger must be sized to charge the battery (after discharge) and supply the constant dc load. In many cases, it may be sized also to provide sufficient dc current to handle the higher energy requirements of tripping breakers and switches when actuated by the protective relays in the Protection System.

Station Battery - Station batteries provide the dc power required for tripping and for supplying normal dc power to the station in the event of loss of the battery charger. There are several technologies of battery that require unique forms of maintenance as established in Table 1-4.

Emerging Technologies - Station dc supplies are currently being developed that use other energy storage technologies besides the station battery to prevent loss of the station dc supply when ac power is lost. Maintenance of these station dc supplies will require different kinds of tests and inspections. Table 1-4 presents maintenance activities and maximum allowable testing intervals for these new station dc supply technologies. However, because these technologies are relatively new, the maintenance activities for these station dc supplies may change over time.

What did the PSMT SDT mean by "continuity" of the dc supply?

The PSMT SDT recognizes that there are several technological advances in equipment and testing procedures that allow the owner to choose how to verify that a battery string is free of open circuits. The term "continuity" was introduced into the standard to allow the owner to choose how to verify continuity (no open circuits) of a battery set by various methods, and not to limit the owner to other conventional methods of showing continuity – lack of an open circuit. Continuity, as used in Table 1-4 of the standard, refers to verifying that there is a continuous current path from the positive terminal of the station battery set to the negative terminal (no open circuit). Without verifying continuity of a station battery, there is no way to determine that the station battery is available to supply dc power to the station. Whether it is caused from an open cell or a bad external connection, an open battery string will be an unavailable power source in the event of loss of the battery charger.

The current path through a station battery from its positive to its negative connection to the dc control circuits is composed of two types of elements. These path elements are the electrochemical path through each of its cells and all of the internal and external metallic connections and terminations of the batteries in the battery set. If there is loss of continuity (an open circuit) in any part of the electrochemical or metallic path, the battery set will not be available for service. In the event of the loss of the ac source or battery charger, the battery must be capable of supplying dc current, both for continuous dc loads and for tripping breakers and switches. Without continuity, the battery cannot perform this function.
At generating stations and large transmission stations where battery chargers are capable of handling the maximum current required by the Protection System, there are still problems that could potentially occur when the continuity through the connected battery is interrupted.

- Many battery chargers produce harmonics which can cause failure of dc power supplies in microprocessor-based protective relays and other electronic devices connected to station dc supply. In these cases, the substation battery serves as a filter for these harmonics. With the loss of continuity in the battery, the filter provided by the battery is no longer present.
- Loss of electrical continuity of the station battery will cause, in most battery chargers, regardless of the battery charger's output current capability, a delayed response in full output current from the charger. Almost all chargers have an intentional one- to two-second delay to switch from a low substation dc load current to the maximum output of the charger. This delay would cause the opening of circuit breakers to be delayed, which could violate system performance standards.

Monitoring of the station dc supply voltage will not indicate that there is a problem with the dc current path through the battery, unless the battery charger is taken out of service. At that time, a break in the continuity of the station battery current path will be revealed because there will be no voltage on the station dc circuitry. This particular test method, while proving battery continuity, may not be acceptable to all installations.

Although the standard prescribes what must be accomplished during the maintenance activity, it does not prescribe how the maintenance activity should be accomplished. There are several methods that can be used to verify the electrical continuity of the battery. These are not the only possible methods, simply a sampling of some methods:

- One method is to measure that there is current flowing through the battery itself by a simple clamp on milliamp-range ammeter. A battery is always either charging or discharging. Even when a battery is charged, there is still a measurable float charge current that can be detected to verify that there is continuity in the electrical path through the battery.
- A simple test for continuity is to remove the battery charger from service and verify that the battery provides voltage and current to the dc system. However, the behavior of the various dc-supplied equipment in the station should be considered before using this approach.
- Manufacturers of microprocessor-controlled battery chargers have developed methods for their equipment to periodically (or continuously) test for battery continuity. For example, one manufacturer periodically reduces the float voltage on the battery until current from the battery to the dc load can be measured to confirm continuity.
- Applying test current (as in some ohmic testing devices, or devices for locating dc grounds) will provide a current that when measured elsewhere in the string, will prove that the circuit is continuous.
- Internal ohmic measurements of the cells and units of lead-acid batteries (VRLA & VLA) can detect lack of continuity within the cells of a battery string; and when used in conjunction with resistance measurements of the battery's external connections, can prove continuity. Also some methods of taking internal ohmic measurements, by their very nature, can prove the continuity of a battery string without having to use the results of resistance measurements of the external connections.

- Specific gravity tests could~~can~~ infer continuity because~~,~~ without continuity~~,~~ there could be no charging occurring; and if there is no charging, then specific gravity will go down below acceptable levels over time.

No matter how the electrical continuity of a battery set is verified, it is a necessary maintenance activity that must be performed at the intervals prescribed by Table 1-4 to insure that the station dc supply has a path that can provide the required current to the Protection System at all times.

When should I check the station batteries to see if they have sufficient energy to perform as manufactured?

The answer to this question depends on the type of battery (valve-regulated lead-acid, vented lead-acid, or nickel-cadmium) and the maintenance activity chosen.

For example, if you have a valve-regulated lead-acid (VRLA) station battery, and you have chosen to evaluate the measured cell/unit internal ohmic values to the battery cell's baseline, you will have to perform verification at a maximum maintenance interval of no greater than every six months. While this interval might seem to be quite short, keep in mind that the six-month interval is important for VRLA batteries; this interval provides an accumulation of data that better shows when a VRLA battery is incapable of performing as manufactured.

If, for a VRLA station battery, you choose to conduct a performance capacity test on the entire station battery as the maintenance activity, then you will have to perform verification at a maximum maintenance interval of no greater than every three calendar years.

How is a baseline established for cell/unit internal ohmic measurements?

Establishment of cell/unit internal ohmic baseline measurements should be completed when lead-acid batteries are newly installed. To ensure that the baseline ohmic cell/unit values are most indicative of the station battery's ability to perform as manufactured, they should be made at some point in time after the installation to allow the cell chemistry to stabilize after the initial freshening charge. An accepted industry practice for establishing baseline values is after six-months of installation, with the battery fully charged and in service. However, it is recommended that each owner, when establishing a baseline, should consult the battery manufacturer for specific instructions on establishing an ohmic baseline for their product, if available.

When internal ohmic measurements are taken, the same make/model test equipment should be used to establish the baseline and used for the future trending of the cells internal ohmic measurements because of variances in test equipment and the type of ohmic measurement used by different manufacturer's equipment. Keep in mind that one manufacturer's "Conductance" test equipment does not produce similar results as another manufacturer's "Conductance" test equipment, even though both manufacturers have produced "Ohmic" test equipment. Therefore, for meaningful results to an established baseline, the same make/modelof instrument should be used.

For all new installations of valve-regulated lead-acid (VRLA) batteries and vented lead-acid (VLA) batteries, where trending of the cells internal ohmic measurements to a baseline are to be used to determine the ability of the station battery to perform as manufactured, the establishment of the baseline, as described above, should be followed at the time of installation to insure the most accurate trending of the cell/unit. However, often for older VRLA batteries,

the owners of the station batteries have not established a baseline at installation. Also for owners of VLA batteries who want to establish a maintenance activity which requires trending of measured ohmic values to a baseline, there was typically no baseline established at installation of the station battery to trend to.

To resolve the problem of the unavailability of baseline internal ohmic measurements for the individual cell/unit of a station battery, many manufacturers of internal ohmic measurement devices have established libraries of baseline values for VRLA and VLA batteries using their testing device. Also, several of the battery manufacturers have libraries of baselines for their products that can be used to trend to. However, it is important that when using battery manufacturer-supplied data that it is verified that the baseline readings to be used were taken with the same ohmic testing device that will be used for future measurements (for example "Conductance Readings" from one manufacturer's test equipment do not correlate to "Impedance Readings" from a different manufacturer's test equipment). Although many manufacturers may have provided baseline values, which will allow trending of the internal ohmic measurements over the remaining life of a station battery, these baselines are not the actual cell/unit measurements for the battery being trended. It is important to have a baseline tailored to the station battery to more accurately use the tool of ohmic measurement trending. That more customized baseline can only be created by following the establishment of a baseline for each cell/unit at the time of installation of the station battery.

Why determine the State of Charge?

Even though there is no present requirement to check the state of charge of a battery, it can be a very useful tool in determining the overall condition of a battery system. The following discussions are offered as a general reference.

When a battery is fully charged, the battery is available to deliver its existing capacity. As a battery is discharged, its ability to deliver its maximum available capacity is diminished. It is necessary to determine if the state of charge has dropped to an unacceptable level.

What is State of Charge and how can it be determined in a station battery?

The state of charge of a battery refers to the ratio of residual capacity at a given instant to the maximum capacity available from the battery. When a battery is fully charged, the battery is available to deliver its existing capacity. As a battery is discharged, its ability to deliver its maximum available capacity is diminished. Knowing the amount of energy left in a battery compared with the energy it had when it was fully charged gives the user an indication of how much longer a battery will continue to perform before it needs recharging.

For vented lead-acid (VLA) batteries which use accessible liquid electrolyte, a hydrometer can be used to test the specific gravity of each cell as a measure of its state of charge. The hydrometer depends on measuring changes in the weight of the active chemicals. As the battery discharges, the active electrolyte, sulfuric acid, is consumed and the concentration of the sulfuric acid in water is reduced. This, in turn, reduces the specific gravity of the solution in direct proportion to the state of charge. The actual specific gravity of the electrolyte can, therefore, be used as an indication of the state of charge of the battery. Hydrometer readings may not tell the whole story, as it takes a while for the acid to get mixed up in the cells of a VLA battery. If measured right after charging, you might see high specific gravity readings at the top of the cell, even though it is much less at the bottom. Conversely, if taken shortly after adding

water to the cell, the specific gravity readings near the top of the cell will be lower than those at the bottom.

Nickel-cadmium batteries, where the specific gravity of the electrolyte does not change during battery charge and discharge, and valve-regulated lead-acid (VRLA) batteries, where the electrolyte is not accessible, cannot have their state of charge determined by specific gravity readings. For these two types of batteries, and ~~also~~ for VLA batteries also, where another method besides taking hydrometer readings is desired, the state of charge may be determined by ~~using the battery charger and~~ taking voltage and current readings at the battery terminals. The methods employed to obtain accurate readings vary for~~during float and equalize (high-rate charge mode). This method is an effective means of determining when~~ the different~~state of charge is low and when it is approaching a fully charged condition, which gives the assurance that the available~~ battery types. Manufacturers' information and IEEE guidelines can~~capacity will~~ be consulted for specifics; (see IEEE 1106 Annex B for Nickel Cadmium batteries, IEEE 1188 Annex A for VRLA batteries and IEEE 450 for VLA batteries~~maximized~~.

Why determine the Connection Resistance?

High connection resistance can cause abnormal voltage drop or excessive heating during discharge of a station battery. During periods of a high rate of discharge of the station battery, a very high resistance can cause severe damage. The maintenance requirement to verify battery terminal connection resistance in Table 1-4 is established to verify that the integrity of all battery electrical connections is acceptable. This verification includes cell-to-cell (intercell) and external circuit terminations. Your method of checking for acceptable values of intercell and terminal connection resistance could be by individual readings, or a combination of the two. There are test methods presently that can read post termination resistances and resistance values between external posts. There are also test methods presently available that take a combination reading of the post termination connection resistance plus the intercell resistance value plus the post termination connection resistance value. Either of the two methods, or any other method, that can show if the adequacy of connections at the battery posts is acceptable.

Adequacy of the electrical terminations can be determined by comparing resistance measurements for all connections taken at the time of station battery's installation to the same resistance measurements taken at the maintenance interval chosen, not to exceed the maximum maintenance interval of Table 1-4. Trending of the interval measurements to the baseline measurements will identify any degradation in the battery connections. When the connection resistance values exceed the acceptance criteria for the connection, the connection is typically disassembled, cleaned, reassembled and measurements taken to verify that the measurements are adequate when compared to the baseline readings.

What conditions should be inspected for visible battery cells?

The maintenance requirement to inspect the cell condition of all station battery cells where the cells are visible is a maintenance requirement of Table 1-4. Station batteries are different from any other component in the Protection Station because they are a perishable product due to the electrochemical process which is used to produce dc electrical current and voltage. This inspection is a detailed visual inspection of the cells for abnormalities that occur in the aging process of the cell. In VLA battery visual inspections, some of the things that the inspector is typically looking for on the plates are signs of sulfation of the plates, abnormal colors (which are an indicator of sulfation or possible copper contamination) and abnormal conditions such as

cracked grids. The visual inspection could look for symptoms of hydration that would indicate that the battery has been left in a completely discharged state for a prolonged period. Besides looking at the plates for signs of aging, all internal connections, such as the bus bar connection to each plate, and the connections to all posts of the battery need to be visually inspected for abnormalities. In a complete visual inspection for the condition of the cell the cell plates, separators and sediment space of each cell must be looked at for signs of deterioration. An inspection of the station battery's cell condition also includes looking at all terminal posts and cell-to-cell electric connections to ensure they are corrosion free. The case of the battery containing the cell, or cells, must be inspected for cracks and electrolyte leaks through cracks and the post seals.

This maintenance activity cannot be extended beyond the maximum maintenance interval of Table 1-4 by a Performance-Based Maintenance Program (PBM) because of the electrochemical aging process of the station battery, nor can there be any monitoring associated with it because there must be a visual inspection involved in the activity. A remote visual inspection could possibly be done, but its interval must be no greater than the maximum maintenance interval of Table 1-4.

Why is it necessary to verify the battery string can perform as manufactured? I only care that the battery can trip the breaker, which means that the battery can perform as designed. I oversize my batteries so that even if the battery cannot perform as manufactured, it can still trip my breakers.

The fundamental answer to this question revolves around the concept of battery performance "as designed" vs. battery performance "as manufactured." The purpose of the various sections of Table 1-4 of this standard is to establish requirements for the Protection System owner to maintain the batteries, to ensure they will operate the equipment when there is an incident that requires dc power, and ensure the batteries will continue to provide adequate service until at least the next maintenance interval. To meet these goals, the correct battery has to be properly selected to meet the design parameters, and the battery has to deliver the power it was manufactured to provide.

When testing batteries, it may be difficult to determine the original design (i.e., load profile) of the dc system. This standard is not intended as a design document, and requirements relating to design are, therefore, not included.

Where the dc load profile is known, the best way to determine if the system will operate as designed is to conduct a service test on the battery. However, a service test alone might not fully determine if the battery is healthy. A battery with 50% capacity may be able to pass a service test, but the battery would be in a serious state of deterioration and could fail at some point in the near future.

To ensure that the battery will meet the required load profile and continue to meet the load profile until the next maintenance interval, the installed battery must be sized correctly (i.e., a correct design), and it must be in a good state of health. Since the design of the dc system is not within the scope of the standard, the only consistent and reliable method to ensure that the battery is in a good state of health is to confirm that it can perform as manufactured. If the battery can perform as manufactured and it has been designed properly, the system should operate properly until the next maintenance interval.

How do I verify the battery string can perform as manufactured?

Optimally, actual battery performance should be verified against the manufacturer's rating curves. The best practice for evaluating battery performance is via a performance test. However, due to both logistical and system reliability concerns, some Protection System owners prefer other methods to determine if a battery can perform as manufactured. There are several battery parameters that can be evaluated to determine if a battery can perform as manufactured. Ohmic measurements and float current are two examples of parameters that have been reported to assist in determining if a battery string can perform as manufactured.

The evaluation of battery parameters in determining battery health is a complex issue, and is not an exact science. This standard gives the user an opportunity to utilize other measured parameters to determine if the battery can perform as manufactured. It is the responsibility of the Protection System owner, however, to maintain a documented process that demonstrates the chosen parameter(s) and associated methodology used to determine if the battery string can perform as manufactured.

Whatever parameters are used to evaluate the battery (ohmic measurements, float current, float voltages, temperature, specific gravity, performance test, or combination thereof), the goal is to determine the value of the measurement (or the percentage change) at which the battery fails to perform as manufactured, or the point where the battery is deteriorating so rapidly that it will not perform as manufactured before the next maintenance interval.

This necessitates the need for establishing and documenting a baseline. A baseline may be required of every individual cell, a particular battery installation, or a specific make, model, or size of a cell. Given a consistent cell manufacturing process, it may be possible to establish a baseline number for the cell (make/model/type) and, therefore, a subsequent baseline for every installation would not be necessary. However, future installations of the same battery types should be spot-checked to ensure that your baseline remains applicable.

Consistent testing methods by trained personnel are essential. Moreover, it is essential that these technicians utilize the same make/model of ohmic test equipment each time readings are taken in order to establish a meaningful and accurate trendline against the established baseline. The type of probe and its location (post, connector, etc) for the reading need to be the same for each subsequent test. The room temperature should be recorded with the readings for each test as well. Care should be taken to consider any factors that might lead a trending program to become invalid.

Float current along with other measureable parameters can be used in lieu of or in concert with ohmic measurement testing to measure the ability of a battery to perform as manufactured. The key to using any of these measurement parameters is to establish a baseline and the point where the reading indicates that the battery will not perform as manufactured.

The establishment of a baseline may be different for various types of cells and for different types of installations. In some cases, it may be possible to obtain a baseline number from the battery manufacturer, although it is much more likely that the baseline will have to be established after the installation is complete. To some degree, the battery may still be "forming" after installation; consequently, determining a stable baseline may not be possible until several months after the battery has been in service.

The most important part of this process is to determine the point where the ohmic reading (or other measured parameter(s)) indicates that the battery cannot perform as manufactured. That point could be an absolute number, an absolute change, or a percentage change of an established baseline.

Since there are no universally-accepted repositories of this information, the Protection System owner will have to determine the value/percentage where the battery cannot perform as manufactured (heretofore referred to as a failed cell). This is the most difficult and important part of the entire process.

To determine the point where the battery fails to perform as manufactured, it is helpful to have a history of a battery type, if the data includes the parameter(s) used to evaluate the battery's ability to perform as manufactured against the actual demonstrated performance/capacity of a battery/cell.

For example, when an ohmic reading has been recorded that the user suspects is indicating a failed cell, a performance test of that cell (or string) should be conducted in order to prove/quantify that the cell has failed. Through this process, the user needs to determine the ohmic value at which the performance of the cell has dropped below 80% of the manufactured, rated performance. It is likely that there may be a variation in ohmic readings that indicates a failed cell (possibly significant). It is prudent to use the most conservative values to determine the point at which the cell should be marked for replacement. Periodically, the user should demonstrate that an “adequate” ohmic reading equates to an adequate battery performance (>80% of capacity).

Similarly, acceptance criteria for "good" and "failed" cells should be established for other parameters such as float current, specific gravity, etc., if used to determine the ability of a battery to function as designed.

What happens if I change the make/model of ohmic test equipment after the battery has been installed for a period of time?

If a user decides to switch testers, either voluntarily or because the equipment is not supported/sold any longer, the user may have to establish a new base line and new parameters that indicate when the battery no longer performs as manufactured. The user always has a choice to perform a capacity test in lieu of establishing new parameters.

What are some of the differences between lead-acid and nickel-cadmium batteries?

There is a marked difference in the aging process of lead acid and nickel-cadmium station batteries. The difference in the aging process of these two types of batteries is chiefly due to the electrochemical process of the battery type. Aging and eventual failure of lead acid batteries is due to expansion and corrosion of the positive grid structure, loss of positive plate active material, and loss of capacity caused by physical changes in the active material of the positive plates. In contrast, the primary failure of nickel-cadmium batteries is due to the gradual linear aging of the active materials in the plates. The electrolyte of a nickel-cadmium battery only facilitates the chemical reaction (it functions only to transfer ions between the positive and negative plates), but is not chemically altered during the process like the electrolyte of a lead acid battery. A lead acid battery experiences continued corrosion of the

positive plate and grid structure throughout its operational life while a nickel-cadmium battery does not.

Changes to the properties of a lead acid battery when periodically measured and trended to a baseline, can indicate aging of the grid structure, positive plate deterioration, or changes in the active materials in the plate.

Because of the clear differences in the aging process of lead acid and nickel-cadmium batteries, there are no significantly measurable properties of the nickel-cadmium battery that can be measured at a periodic interval and trended to determine aging. For this reason, Table 1-4(c) (Protection System Station dc supply Using nickel-cadmium [NiCad] Batteries) only specifies one minimum maintenance activity and associated maximum maintenance interval necessary to verify that the station battery can perform as manufactured by evaluating cell/unit measurements indicative of battery performance against the station battery baseline. This maintenance activity is to conduct a performance or modified performance capacity test of the entire battery bank.

Why in Table 1-4 of PRC-005-2 is there a maintenance activity to inspect the structural intergrity of the battery rack?

The purpose of this inspection is to verify that the battery rack is correctly installed and has no deterioration that could weaken its structural integrity.
Because the battery rack is specifically manufactured for the battery that is mounted on it, weakening of its structural members by rust or corrosion can physically jeopardize the battery.

What is required to comply with the "Unintentional dc Grounds" requirement?

In most cases, the first ground that appears on a battery is not a problem. It is the unintentional ground that appears on the opposite pole that becomes problematic. Even then many systems are designed to operate favorably under some unintentional DC ground situations. It is up to the owner of the Protection System to determine if corrective actions are needed on detected unintentional DC grounds. The standard merely requires that a check be made for the existence of Unintentional DC Grounds. Obviously, a "check-off" of some sort will have to be devised by the inspecting entity to document that a check is routinely done for Unintentional DC Grounds because of the possible consequences to the Protection System.

Where the standard refers to "all cells," is it sufficient to have a documentation method that refers to "all cells," or do we need to have separate documentation for every cell? For example, do I need 60 individual documented check-offs for good electrolyte level, or would a single check-off per bank be sufficient?

A single check-off per battery bank is sufficient for documentation, as long as the single check-off attests to checking all cells/units.

Does this standard refer to Station batteries or all batteries; for example, Communications Site Batteries?

This standard refers to Station Batteries. The drafting team does not believe that the scope of this standard refers to communications sites. The batteries covered under PRC-005-2 are the batteries that supply the trip current to the trip coils of the interrupting devices that are a part of the Protection System. The SDT believes that a loss of power to the communications systems at a remote site would cause the communications systems associated with protective relays to alarm at the substation. At this point, the corrective actions can be initiated.

What are cell/unit internal ohmic measurements?

With the introduction of Valve-Regulated Lead-Acid (VRLA) batteries to station dc supplies in the 1980's several of the standard maintenance tools that are used on Vented Lead-Acid (VLA) batteries were unable to be used on this new type of lead-acid battery to determine its state of health. The only tools that were available to give indication of the health of these new VRLA batteries were voltage readings of the total battery voltage, the voltage of the individual cells and periodic discharge tests.

In the search for a tool for determining the health of a VRLA battery several manufacturers studied the electrical model of a lead acid battery's current path through its cell. The overall battery current path consists of resistance and inductive and capacitive reactance. The inductive reactance in the current path through the battery is so minuscule when compared to the huge capacitive reactance of the cells that it is often ignored in most circuit models of the battery cell. Taking the basic model of a battery cell manufacturers of battery test equipment have developed and marketed testing devices to take measurements of the current path to detect degradation in the internal path through the cell.

In the battery industry, these various types of measurements are referred to as ohmic measurements. Terms used by the industry to describe ohmic measurements are ac conductance, ac impedance, and dc resistance. They are defined by the test equipment providers and IEEE and refer to the method of taking ohmic measurements of a lead acid battery. For example, in one manufacturer's ac conductance equipment measurements are taken by applying a voltage of a known frequency and amplitude across a cell or battery unit and observing the ac current flow it produces in response to the voltage. A manufacturer of an ac impedance meter measures ac current of a known frequency and amplitude that is passed through the whole battery string and determines the impedances of each cell or unit by measuring the resultant ac voltage drop across them. On the other hand, dc resistance of a cell is measured by a third manufacturer's equipment by applying a dc load across the cell or unit and measuring the step change in both the voltage and current to calculate the internal dc resistance of the cell or unit.

It is important to note that because of the rapid development of the market for ohmic measurement devices, there were no standards developed or used to mandate the test signals used in making ohmic measurements. Manufacturers using proprietary methods and applying different frequencies and magnitudes for their signals have developed a diversity of measurement devices. This diversity in test signals coupled with the three different types of ohmic measurements techniques (impedance conductance and resistance) make it impossible to always get the same ohmic measurement for a cell with different ohmic measurement devices. However, IEEE has recognized the great value for choosing one device for ohmic measurement, no matter who makes it or the method to calculate the ohmic measurement. The only caution given by IEEE and the battery manufacturers is that when trending the cells of a lead acid station battery consistent ohmic measurement devices should be used to establish the baseline measurement and to trend the battery set for its entire life.

For VRLA batteries both IEEE Standard 1188 (Maintenance, Testing and Replacement of VRLA Batteries) and IEEE Standard 1187 (Installation Design and Installation of VRLA Batteries) recognize the importance of the maintenance activity of establishing a baseline for "cell/unit internal ohmic measurements (impedance, conductance and resistance)" and trending them at frequent intervals over the life of the battery. There are extensive discussions about the need for taking these measurements in these standards. IEEE Standard 1188 requires taking internal

ohmic values as described in Annex C4 during regular inspections of the station battery. For VRLA batteries IEEE Standard 1188 in talking about the necessity of establishing a baseline and trending it over time says, "…depending on the degree of change a performance test, cell replacement or other corrective action may be necessary…" (IEEE std 1188-2005, C.4 page 18).

For VLA batteries IEEE Standard 484 (Installation of VLA batteries) gives several guidelines about establishing baseline measurements on newly installed lead acid stationary batteries. The standard also discusses the need to look for significant changes in the ohmic measurements, the caution that measurement data will differ with each type of model of instrument used, and lists a number of factors that affect ohmic measurements.

At the beginning of the 21st century, EPRI conducted a series of extensive studies to determine the relationship of internal ohmic measurements to the capacity of a lead acid battery cell. The studies indicated that internal ohmic measurements were in fact a good indicator of a lead acid battery cell's capacity, but because users often were only interested in the total station battery capacity and the technology does not precisely predict overall battery capacity, if a user only needs "an accurate measure of the overall battery capacity," they should "perform a battery capacity test."

Prior to the EPRI studies some large and small companies which owned and maintained station dc supplies in NERC Protection Systems developed maintenance programs where trending of ohmic measurements of cells/units of the station's battery became the maintenance activity for determining if the station battery could perform as manufactured. By evaluation of the trending of the ohmic measurements over time, the owner could track the performance of the individual components of the station battery and determine if a total station battery or components of it required capacity testing, removal, replacement or in many instances replacement of the entire station battery. By taking this condition based approach these owners have eliminated having to perform capacity testing at prescribed intervals to determine if a battery needs to be replaced and are still able to effectively determine if a station battery can perform as manufactured.

My VRLA batteries have multiple-cells within an individual battery jar (or unit); how am I expected to comply with the cell-to-cell ohmic measurement requirements on these units that I cannot get to?

Measurement of cell/unit (not all batteries allow access to "individual cells" some "units" or jars may have multiple cells within a jar) internal ohmic values of all types of lead acid batteries where the cells of the battery are not visible is a station dc supply maintenance activity in Table 1-4. In cases where individual cells in a multi-cell unit are inaccessible, an ohmic measurement of the entire unit may be made.

I have a concern about my batteries being used to support additional auxiliary loads beyond my protection control systems in a generation station. Is ohmic measurement testing sufficient for my needs?

While this standard is focused on addressing requirements for Protection Systems, if batteries are used to service other load requirements beyond that of Protection Systems (e.g. pumps, valves, inverter loads), the functional entity may consider additional testing to confirm that the capacity of the battery is sufficient to support all loads.

Why verify voltage?

There are two required maintenance activities associated with verification of dc voltages in Table 1-4. These two required activities are to verify station dc supply voltage and float voltage of the battery charger, and have different maximum maintenance intervals. Both of these voltage verification requirements relate directly to the battery charger maintenance.

The verification of the dc supply voltage is simply an observation of battery voltage to prove that the charger has not been lost or is not malfunctioning; a reading taken from the battery charger panel meter or even SCADA values of the dc voltage could be some of the ways that one could satisfy the requirements. Low battery voltage below float voltage indicates that the battery may be on discharge and, if not corrected, the station battery could discharge down to some extremely low value that will not operate the Protection System. High voltage, close to or above the maximum allowable dc voltage for equipment connected to the station dc supply indicates the battery charger may be malfunctioning by producing high dc voltage levels on the Protection System. If corrective actions are not taken to bring the high voltage down, the dc power supplies and other electronic devices connected to the station dc supply may be damaged. The maintenance activity of verifying the float voltage of the battery charger is not to prove that a charger is lost or producing high voltages on the station dc supply, but rather to prove that the charger is properly floating the battery within the proper voltage limits. As above, there are many ways that this requirement can be met.

Why check for the electrolyte level?

In vented lead-acid (VLA) and nickel-cadmium (NiCad) batteries the visible electrolyte level must be checked as one of the required maintenance activities that must be performed at an interval that is equal to or less than the maximum maintenance interval of Table 1-4. Because the electrolyte level in valve-regulated lead-acid (VRLA) batteries cannot be observed, there is no maintenance activity listed in Table 1-4 of the standard for checking the electrolyte level. Low electrolyte level of any cell of a VLA or NiCad station battery is a condition requiring correction. Typically, the electrolyte level should be returned to an acceptable level for both types of batteries (VLA and NiCad) by adding distilled or other approved-quality water to the cell.

Often people confuse the interval for watering all cells required due to evaporation of the electrolyte in the station battery cells with the maximum maintenance interval required to check the electrolyte level. In many of the modern station batteries, the jar containing the electrolyte is so large with the band between the high and low electrolyte level so wide that normal evaporation which would require periodic watering of all cells takes several years to occur. However, because loss of electrolyte due to cracks in the jar, overcharging of the station battery, or other unforeseen events can cause rapid loss of electrolyte; the shorter maximum maintenance intervals for checking the electrolyte level are required. A low level of electrolyte in a VLA battery cell which exposes the tops of the plates can cause the exposed portion of the plates to accelerated sulfation resulting in loss of cell capacity. Also, in a VLA battery where the electrolyte level goes below the end of the cell withdrawal tube or filling funnel, gasses can exit the cell by the tube instead of the flame arrester and present an explosion hazard.

What are the parameters that can be evaluated in Tables 1-4(a) and 1-4(b)?

The most common parameter that is periodically trended and evaluated by industry today to verify that the station battery can perform as manufactured is internal ohmic cell/unit measurements.

In the mid 1990s, several large and small utilities began developing maintenance and testing programs for Protection System station batteries using a condition based maintenance approach of trending internal ohmic measurements to each station battery cell's baseline value. Battery owners use the data collected from this maintenance activity to determine (1) when a station battery requires a capacity test (instead of performing a capacity test on a predetermined, prescribed interval), (2) when an individual cell or battery unit should be replaced, or (3) based on the analysis of the trended data, if the station battery should be replaced without performing a capacity test.

Other examples of measurable parameters that can be periodically trended and evaluated for lead acid batteries are cell voltage, float current, connection resistance. However, periodically trending and evaluating cell/unit Ohmic measurements are the most common battery/cell parameters that are evaluated by industry to verify a lead acid battery string can perform as manufactured.

Why does it appear that there are two maintenance activities in Table 1-4(b) (for VRLA batteries) that appear to be the same activity and have the same maximum maintenance interval?

There are two different and distinct reasons for doing almost the same maintenance activity at the same interval for valve-regulated lead-acid (VRLA) batteries. The first similar activity for VRLA batteries (Table 1-4(b)) that has the same maximum maintenance interval is to "measure battery cell/unit internal ohmic values." Part of the reason for this activity is because the visual inspection of the cell condition is unavailable for VRLA batteries. Besides the requirement to measure the internal ohmic measurements of VRLA batteries to determine the internal health of the cell, the maximum maintenance interval for this activity is significantly shorter than the interval for vented lead-acid (VLA) due to some unique failure modes for VRLA batteries. Some of the potential problems that VRLA batteries are susceptible to that do not affect VLA batteries are thermal runaway, cell dry-out, and cell reversal when one cell has a very low capacity.

The other similar activity listed in Table 1-4(b) is "…verify that the station battery can perform as manufactured by evaluating the measured cell/unit measurements indicative of battery performance (e.g internal ohmic values) against the station battery baseline." This activity allows an owner the option to choose between this activity with its much shorter maximum maintenance interval or the longer maximum maintenance interval for the maintenance activity to "Verify that the station battery can perform as manufactured by conducting a performance or modified performance capacity test of the entire battery bank."

For VRLA batteries, there are two drivers for internal ohmic readings. The first driver is for a means to trend battery life. Trending against the baseline of VRLA cells in a battery string is essential to determine the approximate state of health of the battery. Ohmic measurement testing may be used as the mechanism for measuring the battery cells. If all the cells in the string exhibit a consistent trend line and that trend line has not risen above a specific deviation (e.g. 30%) over baseline for impedance tests or below baseline for conductance tests, then a judgment can be made that the battery is still in a reasonably good state of health and able to 'perform as manufactured.' It is essential that the specific deviation mentioned above is based on data (test or otherwise) that correlates the ohmic readings for a specific battery/tester combination to the health of the battery. This is the intent of the "perform **as** manufactured six-month test" at Row 4 on Table 1-4b.

The second big driver is VRLA batteries tendency for thermal runaway. This is the intent of the "thermal runaway test" at Row 2 on Table 1-4b. In order to detect a cell in thermal runaway, you need not necessarily have a formal trending program. When a single cell/unit changes significantly or significantly varies from the other cells (e.g. a doubling of resistance/impedance or a 50% decrease in conductance), there is a high probability that the cell/unit/string needs to be replaced as soon as possible. In other words, if the battery is 10 years old and all the cells have approached a significant change in ohmic values over baseline, then you have a battery which is approaching end of life. You need to get ready to buy a new battery, but you do not have to worry about an impending catastrophic failure. On the other hand, if the battery is five years old and you have one cell that has a markedly different ohmic reading than all the other cells, then you need to be worried that this cell is susceptible to~~in~~ thermal runaway. If the float (charging) current has risen significantly and the ohmic measurement has increased/decreased as described above then concern of catastrophic failure should trigger attention for corrective action~~is imminent~~.

If an entity elects to use a capacity test rather than a cell ohmic value trending program, this does not eliminate the need to be concerned about thermal runaway – the entity still needs to do the six-month readings and look for cells which are outliers in the string but they need not trend results against the factory/as new baseline. Some entities will not mind the extra administrative burden of having the ongoing trending program against baseline - others would rather just do the capacity test and not have to trend the data against baseline. Nonetheless, all entities must look for ohmic outliers on a six-month basis.

It is possible to accomplish both tasks listed (trend testing for capability and testing for thermal runaway candidates) with the very same ohmic test. It becomes an analysis exercise of watching the trend from baselines and watching for the oblique cell measurement.

In table 1-4(f) (Exclusions for Protection System Station dc Supply Monitoring Devices and Systems), must all component attributes listed in the table be met before an exclusion can be granted for a maintenance activity?

Table 1-4(f) was created by the drafting team to allow Protection System dc supply owners to obtain exclusions from periodic maintenance activities by using monitoring devices. The basis of the exclusions granted in the table is that the monitoring devices must incorporate the monitoring capability of microprocessor based components which perform continuous self-monitoring. For failure of the microprocessor device used in dc supply monitoring, the self checking routine in the microprocessor must generate an alarm which will be reported within 24 hours of device failure to a location where corrective action can be initiated.

Table 1-4(f) lists 8 component attributes along with a specific periodic maintenance activity associated with each of the 8 attributes listed. If an owner of a station dc supply wants to be excluded from periodically performing one of the 8 maintenance activities listed in table 1-4(f), the owner must have evidence that the monitoring and alarming component attributes associated with the excluded maintenance activity are met by the self checking microprocessor based device with the specific component attribute listed in the table 1-4(f).

For example if an owner of a VLA station battery does not want to "verify station dc supply voltage" every "4 calendar months" (see table 1-4(a)), the owner can install a monitoring and alarming device "with high and low voltage monitoring and alarming of the battery charger voltage to detect charger overvoltage and charger failure" and "no periodic verification of station dc supply voltage is required" (see table 1-4(f) first row). However, if for the same Protection System discussed above, the owner does not install "electrolyte level monitoring and alarming in every cell" and "unintentional dc ground monitoring and alarming" (see second and third rows of table 1-4(f)), the owner will have to "inspect electrolyte level and for unintentional grounds" every "4 calendar months" (see table 1-4(a)).

15.5 Associated communications equipment (Table 1-2)

The equipment used for tripping in a communications-assisted trip scheme is a vital piece of the trip circuit. Remote action causing a local trip can be thought of as another parallel trip path to the trip coil that must be tested. Besides the trip output and wiring to the trip coil(s), there is also a communications medium that must be maintained. Newer technologies now exist that achieve communications-assisted tripping without the conventional wiring practices of older technology. For example, older technologies may have included Frequency Shift Key methods. This technology requires that guard and trip levels be maintained. The actual tripping path(s) to the trip coil(s) may be tested as a parallel trip path within the dc control circuitry tests. Emerging technologies transfer digital information over a variety of carrier mediums that are then interpreted locally as trip signals. The requirements apply to the communicated signal needed for the proper operation of the protective relay trip logic or scheme. Therefore, this standard is applied to equipment used to convey both trip signals (permissive or direct) and block signals.

It was the intent of this standard to require that a test be performed on any communications-assisted trip scheme, regardless of the vintage of technology. The essential element is that the tripping (or blocking) occurs locally when the remote action has been asserted; or that the tripping (or blocking) occurs remotely when the local action is asserted. Note that the required testing can still be done within the concept of testing by overlapping segments. Associated communications equipment can be (but is not limited to) testing at other times and different frequencies as the protective relays, the individual trip paths and the affected circuit interrupting devices.

Some newer installations utilize digital signals over fiber-optics from the protective relays in the control house to the circuit interrupting device in the yard. This method of tripping the circuit breaker, even though it might be considered communications, must be maintained per the dc control circuitry maintenance requirements.

15.5.1 Frequently Asked Questions:

What are some examples of mechanisms to check communications equipment functioning?

For unmonitored Protection Systems, various types of communications systems will have different facilities for on-site integrity checking to be performed at least every four months during a substation visit. Some examples are, but not limited to:

- On-off power-line carrier systems can be checked by performing a manual carrier keying test between the line terminals, or carrier check-back test from one terminal.
- Systems which use frequency-shift communications with a continuous guard signal (over a telephone circuit, analog microwave system, etc.) can be checked by observing for a loss-of-guard indication or alarm. For frequency-shift power-line carrier systems, the guard signal level meter can also be checked.
- Hard-wired pilot wire line Protection Systems typically have pilot-wire monitoring relays that give an alarm indication for a pilot wire ground or open pilot wire circuit loop.
- Digital communications systems typically have a data reception indicator or data error indicator (based on loss of signal, bit error rate, or frame error checking).

For monitored Protection Systems, various types of communications systems will have different facilities for monitoring the presence of the communications channel, and activating alarms that can be monitored remotely. Some examples are, but not limited to:

- On-off power-line carrier systems can be shown to be operational by automated periodic power-line carrier check-back tests with remote alarming of failures.
- Systems which use a frequency-shift communications with a continuous guard signal (over a telephone circuit, analog microwave system, etc.) can be remotely monitored with a loss-of-guard alarm or low signal level alarm.
- Hard-wired pilot wire line Protection Systems can be monitored by remote alarming of pilot-wire monitoring relays.
- Digital communications systems can activate remotely monitored alarms for data reception loss or data error indications.
- Systems can be queried for the data error rates.

For the highest degree of monitoring of Protection Systems, the communications system must monitor all aspects of the performance and quality of the channel that show it meets the design performance criteria, including monitoring of the channel interface to protective relays.

- In many communications systems signal quality measurements, including signal-to-noise ratio, received signal level, reflected transmitter power or standing wave ratio, propagation delay, and data error rates are compared to alarm limits. These alarms are connected for remote monitoring.
- Alarms for inadequate performance are remotely monitored at all times, and the alarm communications system to the remote monitoring site must itself be continuously monitored to assure that the actual alarm status at the communications equipment location is continuously being reflected at the remote monitoring site.

What is needed for the four-month inspection of communications-assisted trip scheme equipment?

The four-month inspection applies to unmonitored equipment. An example of compliance with this requirement might be, but is not limited to:

With each site visit, check that the equipment is free from alarms; check any metered signal levels, and that power is still applied. While this might be explicit for a particular type of equipment (i.e., FSK equipment), the concept should be that the entity verify that the communications equipment that is used in a Protection System is operable through a cursory inspection and site visit. This site visit can be eliminated on this particular example if the FSK equipment had a monitored alarm on Loss of Guard. Blocking carrier systems with auto checkbacks will present an alarm when the channel fails allowing a visual indication. With no auto checkback, the channel integrity will need to be verified by a manual checkback or a two ended signal check. This check could also be eliminated by bring the auto checkback failure alarm to the monitored central location.

Does a fiber optic I/O scheme used for breaker tripping or control within a station, for example - transmitting a trip signal or control logic between the control house and the breaker control cabinet, constitute a communications system?

This equipment is presently classified as being part of the Protection System control circuitry~~Control Circuitry~~ and tested per the portions of Table 1 applicable to "Protection System Control Circuitry"~~,~~ rather than those portions of the table applicable to communications equipment.

What is meant by "Channel" and "Communications Systems" in Table 1-2?

The transmission of logic or data from a relay in one station to a relay in another station for use in a pilot relay scheme will require a communications system of some sort. Typical relay communications systems use fiber optics, leased audio channels, power line carrier, and microwave. The overall communications system includes the channel and the associated communications equipment.

This standard refers to the "channel" as the medium between the transmitters and receivers in the relay panels such as a leased audio or digital communications circuit, power line and power line carrier auxiliary equipment, and fiber. The dividing line between the channel and the associated communications equipment is different for each type of media.

Examples of the Channel:

- Power Line Carrier (PLC) - The PLC channel starts and ends at the PLC transmitter and receiver output unless there is an internal hybrid. The channel includes the external hybrids, tuners, wave traps and the power line itself.
- Microwave –The channel includes the microwave multiplexers, radios, antennae and associated auxiliary equipment. The audio tone and digital transmitters and receivers in the relay panel are the associated communications equipment.
- Digital/Audio Circuit – The channel includes the equipment within and between the substations. The associated~~auxiliary~~ communications equipment includes the relay panel transmitters and receivers and the interface equipment in the relays.

- Fiber Optic – The channel starts at the fiber optic connectors on the fiber distribution panel at the local station and goes to the fiber optic distribution panel at the remote substation. The jumpers that connect the relaying equipment to the fiber distribution panel and any optical-electrical signal format converters are the associated communications equipment

Figure 1-2, A-1 and A-2 at the end of this document show good examples of the communications channel and the associated communications equipment.

In Table 1-2, the Maintenance Activities section of the Protective System Communications Equipment and Channels refers to the quality of the channel meeting "performance criteria." What is meant by performance criteria?

Protection System communications channels must have a means of determining if the channel and communications equipment is operating normally. If the channel is not operating normally, an alarm will be indicated. For unmonitored systems, this alarm will probably be on the panel. For monitored systems, the alarm will be transmitted to a remote location.

Each entity will have established a nominal performance level for each Protection System communications channel that is consistent with proper functioning of the Protection System. If that level of nominal performance is not being met, the system will go into alarm. Following are some examples of Protection System communications channel performance measuring:

- For direct transfer trip using a frequency shift power line carrier channel, a guard level monitor is part of the equipment. A normal receive level is established when the system is calibrated and if the signal level drops below an established level, the system will indicate an alarm.
- An on-off blocking signal over power line carrier is used for directional comparison blocking schemes on transmission lines. During a Fault, block logic is sent to the remote relays by turning on a local transmitter and sending the signal over the power line to a receiver at the remote end. This signal is normally off so continuous levels cannot be checked. These schemes use check-back testing to determine channel performance. A predetermined signal sequence is sent to the remote end and the remote end decodes this signal and sends a signal sequence back. If the sending end receives the correct information from the remote terminal, the test passes and no alarm is indicated. Full power and reduced power tests are typically run. Power levels for these tests are determined at the time of calibration.
- Pilot wire relay systems use a hardwire communications circuit to communicate between the local and remote ends of the protective zone. This circuit is monitored by circulating a dc current between the relay systems. A typical level may be 1 mA. If the level drops below the setting of the alarm monitor, the system will indicate an alarm.
- Modern digital relay systems use data communications to transmit relay information to the remote end relays. An example of this is a line current differential scheme commonly used on transmission lines. The protective relays communicate current magnitude and phase information over the communications path to determine if the Fault is located in the protective zone. Quantities such as digital packet loss, bit error rate and channel delay are monitored to determine the quality of the channel. These

limits are determined and set during relay commissioning. Once set, any channel quality problems that fall outside the set levels will indicate an alarm.

The previous examples show how some protective relay communications channels can be monitored and how the channel performance can be compared to performance criteria established by the entity. This standard does not state what the performance criteria will be; it just requires that the entity establish nominal criteria so Protection System channel monitoring can be performed.

How is the performance criteria of Protection System communications equipment involved in the maintenance program?

An entity determines the acceptable performance criteria, depending on the technology implemented. If the communications channel performance of a Protection System varies from the pre-determined performance criteria for that system, then these results should be investigated and resolved.

How do I verify the A/D converters of microprocessor-based relays?

There are a variety of ways to do this. Two examples would be: using values gathered via data communications and automatically comparing these values with values from other sources, or using groupings of other measurements (such as vector summation of bus feeder currents) for comparison. Many other methods are possible.

15.6 Alarms (Table 2)

In addition to the tables of maintenance for the components of a Protection System, there is an additional table added for alarms. This additional table was added for clarity. This enabled the common alarm attributes to be consolidated into a single spot, and, thus, make it easier to read the Tables 1-1 through 1-5. The alarms need to arrive at a site wherein a corrective action can be initiated. This could be a control room, operations center, etc. The alarming mechanism can be a standard alarming system or an auto-polling system; the only requirement is that the alarm be brought to the action-site within 24 hours. This effectively makes manned-stations equivalent to monitored stations. The alarm of a monitored point (for example a monitored trip path with a lamp) in a manned-station now makes that monitored point eligible for monitored status. Obviously, these same rules apply to a non-manned-station, which is that if the monitored point has an alarm that is auto-reported to the operations center (for example) within 24 hours, then it too is considered monitored.

15.6.1 Frequently Asked Questions:

Why are there activities defined for varying degrees of monitoring a Protection System component when that level of technology may not yet be available?

There may already be some equipment available that is capable of meeting the highest levels of monitoring criteria listed in the Tables. However, even if there is no equipment available today that can meet this level of monitoring the standard establishes the necessary requirements for when such equipment becomes available. By creating a roadmap for development, this provision makes the standard technology neutral. The Standard Drafting Team wants to avoid the need to revise the standard in a few years to accommodate technology advances that may be coming to the industry.

Does a fail-safe "form b" contact that is alarmed to a 24/7 operation center classify as an alarm path with monitoring?

If the fail-safe "form-b" contact that is alarmed to a 24/7 operation center causes the alarm to activate for failure of any portion of the alarming path from the alarm origin to the 24/7 operations center, then this can be classified as an alarm path with monitoring.

15.7 Distributed UFLS and Distributed UVLS Systems (Table 3)

Distributed UFLS and distributed UVLS systems have their maintenance activities documented in Table 3 due to their distributed nature allowing reduced maintenance activities and extended maximum maintenance intervals. Relays have the same maintenance activities and intervals as Table 1-1. Voltage and current-sensing devices have the same maintenance activity and interval as Table 1-3. DC systems need only have their voltage read at the relay every 12 years. Control circuits have the following maintenance activities every 12 years:

- Verify the trip path between the relay and lock-out and/or auxiliary tripping device(s).
- Verify operation of any lock-out and/or auxiliary tripping device(s) used in the trip circuit.
- No verification of trip path required between the lock-out (and/or auxiliary tripping device) and the non-BES interrupting device.
- No verification of trip path required between the relay and trip coil for circuits that have no lock-out and/or auxiliary tripping device(s).
- No verification of trip coil required.

No maintenance activity is required for associated communication systems for distributed UFLS and distributed UVLS schemes.

Non-BES interrupting devices that participate in a distributed UFLS or distributed UVLS scheme are excluded from the tripping requirement, and part of the control circuit test requirement; however, the part of the trip path control circuitry between the Load-Shed relay and lock-out or auxiliary tripping relay must be tested at least once every 12 years. In the case where there is no lock-out or auxiliary tripping relay used in a distributed UFLS or UVLS scheme which is not part of the BES, there is no control circuit test requirement. There are many circuit interrupting devices in the distribution system that will be operating for any given under-frequency event that requires tripping for that event. A failure in the tripping action of a single distributed system circuit breaker (or non-BES equipment interruption device) will be far less significant than, for example, any single transmission Protection System failure, such as a failure of a bus differential lock-out relay. While many failures of these distributed system circuit breakers (or non-BES equipment interruption device) could add up to be significant, it is also believed that many circuit breakers are operated often on just Fault clearing duty; and, therefore, these circuit breakers are operated at least as frequently as any requirements that appear in this standard.

There are times when a Protection System component will be used on a BES device, as well as a non-BES device, such as a battery bank that serves both a BES circuit breaker and a non-BES interrupting device used for UFLS. In such a case, the battery bank (or other Protection System component) will be subject to the Tables of the standard because it is used for the BES.

15.7.1 Frequently Asked Questions:

The standard reaches further into the distribution system than we would like for UFLS and UVLS

While UFLS and UVLS equipment are located on the distribution network, their job is to protect the Bulk Electric System. This is not beyond the scope of NERC's 215 authority.

FPA section 215(a) definitions section defines bulk power system as: "(A) facilities and control Systems necessary for operating an interconnected electric energy transmission network (or any portion thereof)." That definition, then, is limited by a later statement which adds the term bulk power system "…does not include facilities used in the local distribution of electric energy." Also, Section 215 also covers users, owners, and operators of bulk power Facilities.

UFLS and UVLS (when the UVLS is installed to prevent system voltage collapse or voltage instability for BES reliability) are not "used in the local distribution of electric energy," despite their location on local distribution networks. Further, if UFLS/UVLS Facilities were not covered by the reliability standards, then in order to protect the integrity of the BES during under-frequency or under-voltage events, that Load would have to be shed at the Transmission bus to ensure the Load-generation balance and voltage stability is maintained on the BES.

15.8 Examples of Evidence of Compliance

To comply with the requirements of this standard, an entity will have to document and save evidence. The evidence can be of many different forms. The Standard Drafting Team recognizes that there are concurrent evidence requirements of other NERC standards that could, at times, fulfill evidence requirements of this Standard.

15.8.1 Frequently Asked Questions:

What forms of evidence are acceptable?

Acceptable forms of evidence, as relevant for the requirement being documented include, but are not limited to:

- Process documents or plans
- Data (such as relay settings sheets, photos, SCADA, and test records)
- Database lists, records and/or screen shots that demonstrate compliance information
- Prints, diagrams and/or schematics
- Maintenance records
- Logs (operator, substation, and other types of log)
- Inspection forms
- Mail, memos, or email proving the required information was exchanged, coordinated, submitted or received
- Check-off forms (paper or electronic)
- Any record that demonstrates that the maintenance activity was known, accounted for, and/or performed.

If I replace a failed Protection System component with another component, what testing do I need to perform on the new component?

In order to reset the Table 1 maintenance interval for the replacement component, all relevant Table 1 activities for the component should be performed.

I have evidence to show compliance for PRC-016 ("Special Protection System Misoperation"). Can I also use it to show compliance for this Standard, PRC-005-2?

Maintaining evidence for operation of Special Protection Systems could concurrently be utilized as proof of the operation of the associated trip coil (provided one can be certain of the trip coil involved). Thus, the reporting requirements that one may have to do for the Misoperation of a Special Protection Scheme under PRC-016 could work for the activity tracking requirements under this PRC-005-2.

I maintain Disturbance records which show Protection System operations. Can I use these records to show compliance?

These records can be concurrently utilized as dc trip path verifications, to the degree that they demonstrate the proper function of that dc trip path.

I maintain test reports on some of my Protection System components. Can I use these test reports to show that I have verified a maintenance activity?

Yes.

References

1. Protection System Maintenance: A Technical Reference. Prepared by the System Protection and Controls Task Force of the NERC Planning Committee. Dated September 13, 2007.

2. "Predicating The Optimum Routine test Interval For Protection Relays," by J. J. Kumm, M.S. Weber, D. Hou, and E. O. Schweitzer, III, IEEE Transactions on Power Delivery, Vol. 10, No. 2, April 1995.

3. "Transmission Relay System Performance Comparison For 2000, 2001, 2002, 2003, 2004 and 2005," Working Group I17 of Power System Relaying Committee of IEEE Power Engineering Society, May 2006.

4. "A Survey of Relaying Test Practices," Special Report by WG I11 of Power System Relaying Committee of IEEE Power Engineering Society, September 16, 1999.

5. "Transmission Protective Relay System Performance Measuring Methodology," Working Group I3 of Power System Relaying Committee of IEEE Power Engineering Society, January 2002.

6. "Processes, Issues, Trends and Quality Control of Relay Settings," Working Group C3 of Power System Relaying Committee of IEEE Power Engineering Society, December 2006.

7. "Proposed Statistical Performance Measures for Microprocessor-Based Transmission-Line Protective Relays, Part I - Explanation of the Statistics, and Part II - Collection and Uses of Data," Working Group D5 of Power System Relaying Committee of IEEE Power Engineering Society, May 1995; Papers 96WM 016-6 PWRD and 96WM 127-1 PWRD, 1996 IEEE Power Engineering Society Winter Meeting.

8. "Analysis And Guidelines For Testing Numerical Protection Schemes," Final Report of CIGRE WG 34.10, August 2000.

9. "Use of Preventative Maintenance and System Performance Data to Optimize Scheduled Maintenance Intervals," H. Anderson, R. Loughlin, and J. Zipp, Georgia Tech Protective Relay Conference, May 1996.

10. "Battery Performance Monitoring by Internal Ohmic Measurements" EPRI Application Guidelines for Stationary Batteries TR- 108826 Final Report, December 1997.

11. "IEEE Recommended Practice for Maintenance, Testing, and Replacement of Valve-Regulated Lead-Acid (VRLA) Batteries for Stationary Applications," IEEE Power Engineering Society Std 1188 – 2005.

12. "IEEE Recommended Practice for Maintenance, Testing, and Replacement of Vented Lead-Acid Batteries for Stationary Applications," IEEE Power & Engineering Society Std 45-2010.

13. "IEEE Recommended Practice for Installation design and Installation of Vented Lead-Acid Batteries for Stationary Applications," IEEE Std 484 – 2002.

14. "Stationary Battery Monitoring by Internal Ohmic Measurements," EPRI Technical Report, 1002925 Final Report, December 2002.

15. "Stationary Battery Guide: Design Application, and Maintenance" EPRI Revision 2 of TR-100248, 1006757, August 2002.

PSMT SDT References

16. “Essentials of Statistics for Business and Economics” Anderson, Sweeney, Williams, 2003

17. “Introduction to Statistics and Data Analysis” - Second Edition, Peck, Olson, Devore, 2005

18. “Statistical Analysis for Business Decisions” Peters, Summers, 1968

Figures

Figure 1: Typical Transmission System

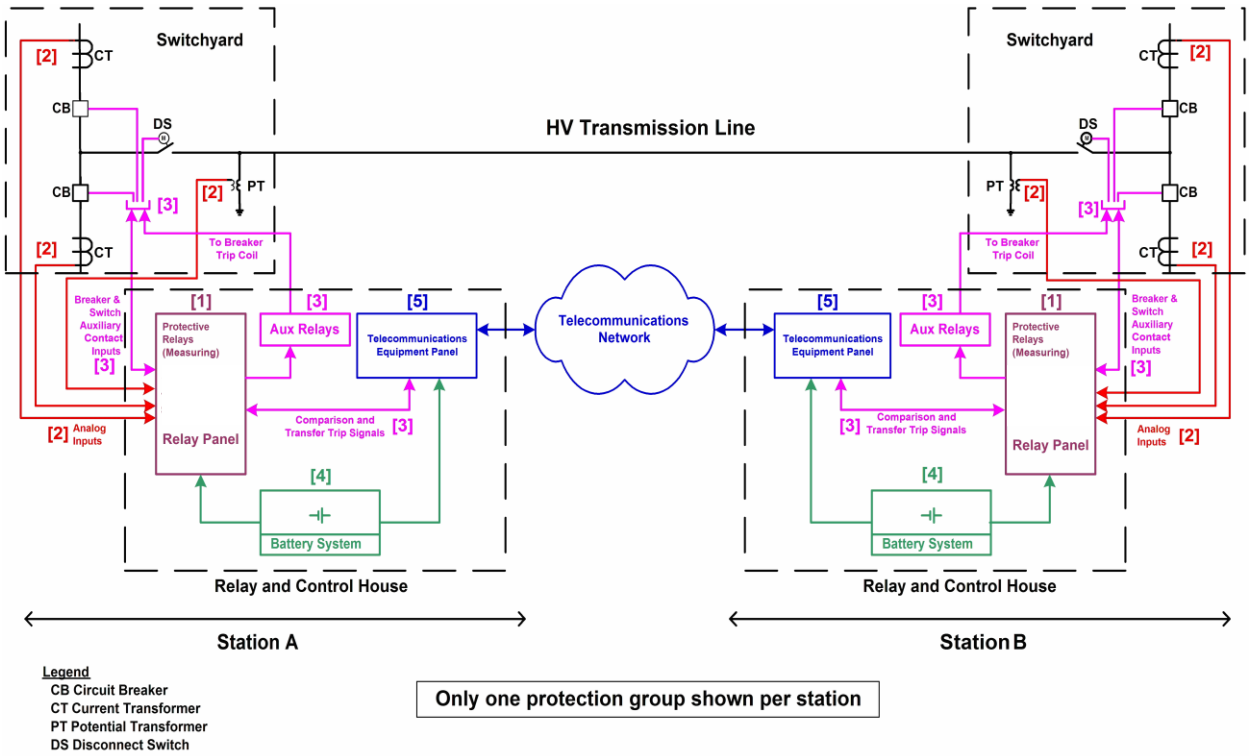

For information on components, see ***Figure 1 & 2 Legend – components of Protection Systems***

Figure 2: Typical Generation System

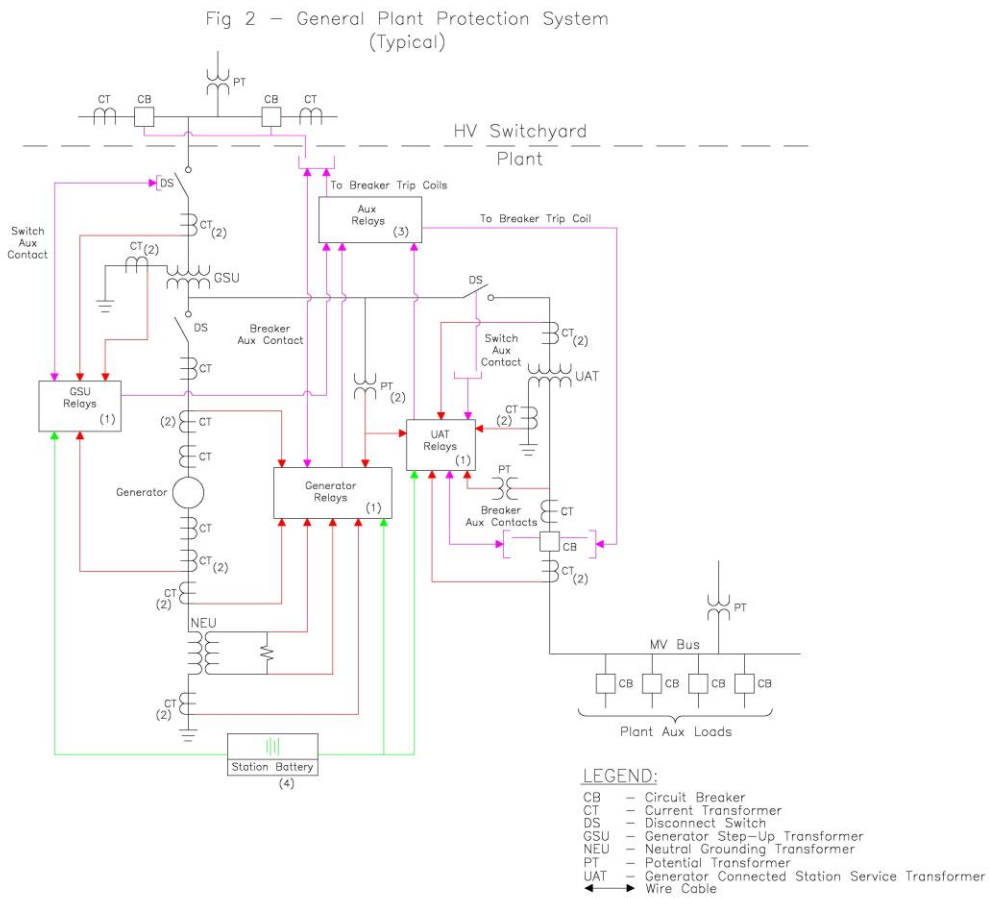

Note: Figure 2 may show elements that are not included within PRC-005-2, and also may not be all-inclusive; see the Applicability section of the standard for specifics.

For information on components, see ***Figure 1 & 2 Legend – components of Protection Systems***

Figure 1 & 2 Legend – components of Protection Systems

Number in Figure	component of Protection System	Includes	Excludes
1	Protective relays which respond to electrical quantities	All protective relays that use current and/or voltage inputs from current & voltage sensors and that trip the 86, 94 or trip coil.	Devices that use non-electrical methods of operation including thermal, pressure, gas accumulation, and vibration. Any ancillary equipment not specified in the definition of Protection Systems. Control and/or monitoring equipment that is not a part of the automatic tripping action of the Protection System
2	Voltage and current sensing devices providing inputs to protective relays	The signals from the voltage & current sensing devices to the protective relay input.	Voltage & current sensing devices that are not a part of the Protection System, including sync-check systems, metering systems and data acquisition systems.
3	Control circuitry associated with protective functions	All control wiring (or other medium for conveying trip signals) associated with the tripping action of 86 devices, 94 devices or trip coils (from all parallel trip paths). This would include fiber-optic systems that carry a trip signal as well as hard-wired systems that carry trip current.	Closing circuits, SCADA circuits, other devices in control scheme not passing trip current
4	Station dc supply	Batteries and battery chargers and any control power system which has the function of supplying power to the protective relays, associated trip circuits and trip coils.	Any power supplies that are not used to power protective relays or their associated trip circuits and trip coils.
5	Communications systems necessary for correct operation of protective functions	Tele-protection equipment used to convey specific information, in the form of analog or digital signals, necessary for the correct operation of protective functions.	Any communications equipment that is not used to convey information necessary for the correct operation of protective functions.

Additional information can be found in References

Appendix A

The following illustrates the concept of overlapping verifications and tests as summarized in Section 10 of the paper. As an example, Figure A-1 shows protection for a critical transmission line by carrier blocking directional comparison pilot relaying. The goal is to verify the ability of the entire two-terminal pilot protection scheme to protect for line Faults, and to avoid over-tripping for Faults external to the transmission line zone of protection bounded by the current transformer locations.

Figure A-1

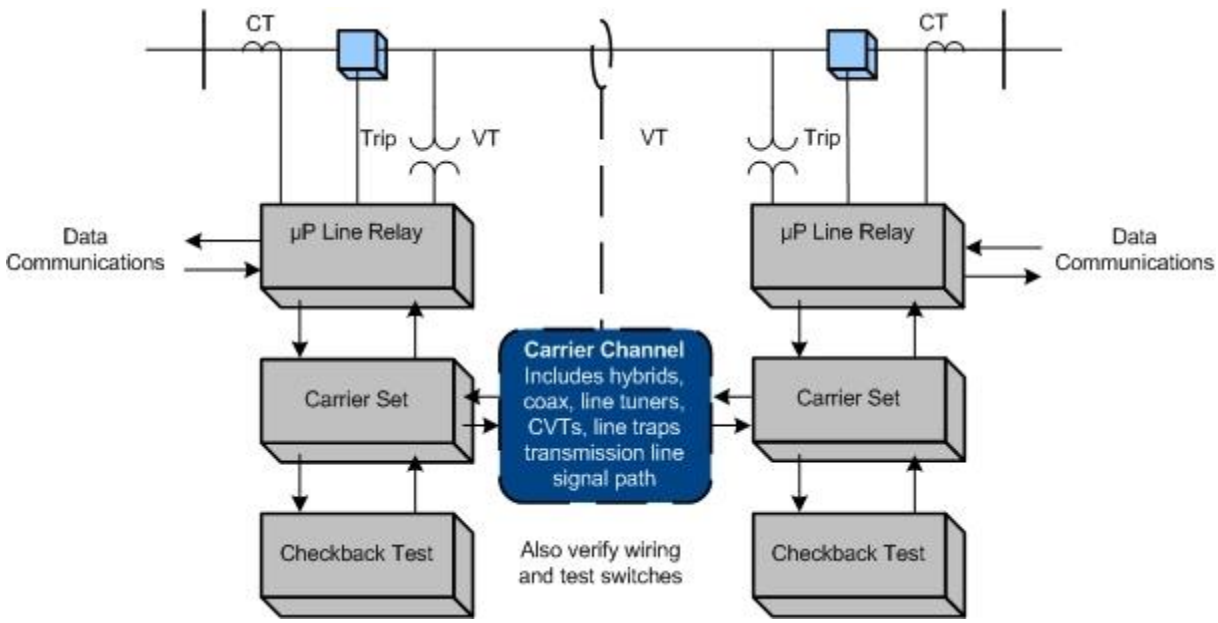

In this example (Figure A1), verification takes advantage of the self-monitoring features of microprocessor multifunction line relays at each end of the line. For each of the line relays themselves, the example assumes that the user has the following arrangements in place:

1. The relay has a data communications port that can be accessed from remote locations.
2. The relay has internal self-monitoring programs and functions that report failures of internal electronics, via communications messages or alarm contacts to SCADA.
3. The relays report loss of dc power, and the relays themselves or external monitors report the state of the dc battery supply.
4. The CT and PT inputs to the relays are used for continuous calculation of metered values of volts, amperes, plus Watts and VARs on the line. These metered values are reported by data communications. For maintenance, the user elects to compare these readings to those of other relays, meters, or DFRs. The other readings may be from redundant relaying or measurement systems or they may be derived from values in other protection zones. Comparison with other such readings to within required relaying accuracy verifies voltage & current sensing devices~~Voltage & Current Sensing Devices~~, wiring, and analog signal input

processing of the relays. One effective way to do this is to utilize the relay metered values directly in SCADA, where they can be compared with other references or state estimator values.

5. Breaker status indication from auxiliary contacts is verified in the same way as in (2). Status indications must be consistent with the flow or absence of current.
6. Continuity of the breaker trip circuit from dc bus through the trip coil is monitored by the relay and reported via communications.
7. Correct operation of the on-off carrier channel is also critical to security of the Protection System, so each carrier set has a connected or integrated automatic checkback test unit. The automatic checkback test runs several times a day. Newer carrier sets with integrated checkback testing check for received signal level and report abnormal channel attenuation or noise, even if the problem is not severe enough to completely disable the channel.

These monitoring activities plus the check-back test comprise automatic verification of all the Protection System elements that experience tells us are the most prone to fail. But, does this comprise a complete verification?

Figure A-2

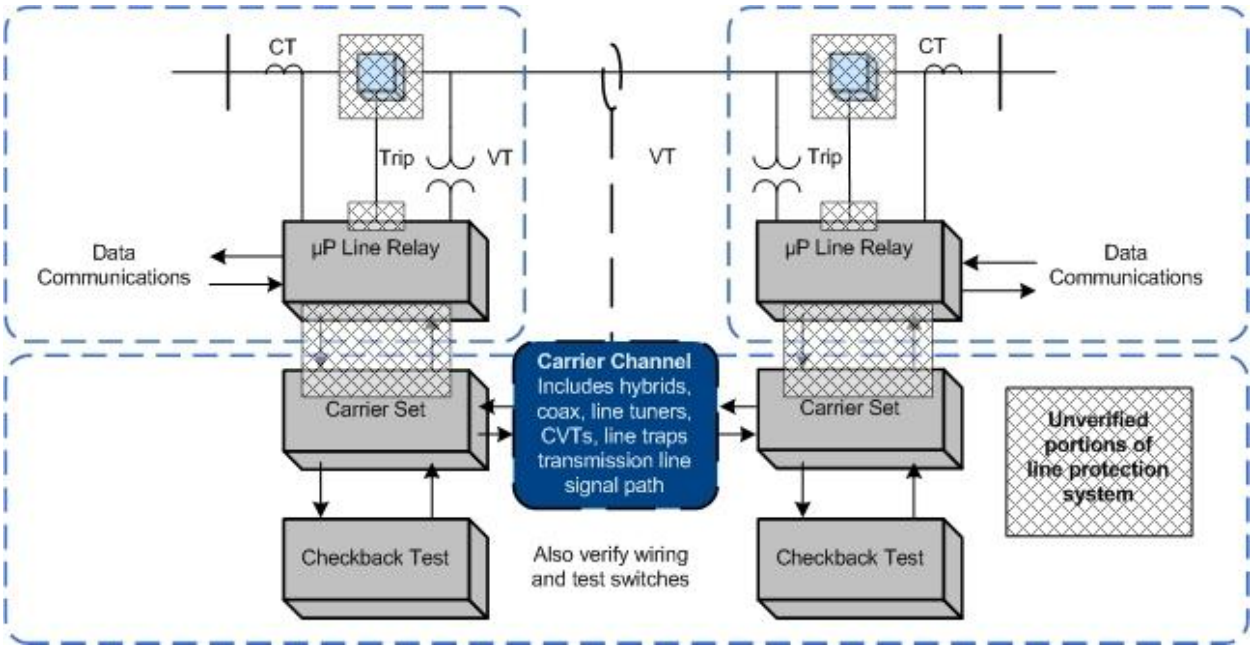

The dotted boxes of Figure A-2 show the sections of verification defined by the monitoring and verification practices just listed. These sections are not completely overlapping, and the shaded regions show elements that are not verified:

1. The continuity of trip coils is verified, but no means is provided for validating the ability of the circuit breaker to trip if the trip coil should be energized.
2. Within each line relay, all the microprocessors that participate in the trip decision have been verified by internal monitoring. However, the trip circuit is actually energized by the contacts of a small telephone-type "ice cube" relay within the line protective relay. The microprocessor energizes the coil of this ice cube relay through its output data port and a transistor driver circuit. There is no monitoring of the output port, driver circuit, ice cube relay, or contacts of that relay. These components are critical for tripping the circuit breaker for a Fault.
3. The check-back test of the carrier channel does not verify the connections between the relaying microprocessor internal decision programs and the carrier transmitter keying circuit or the carrier receiver output state. These connections include microprocessor I/O ports, electronic driver circuits, wiring, and sometimes telephone-type auxiliary relays.
4. The correct states of breaker and disconnect switch auxiliary contacts are monitored, but this does not confirm that the state change indication is correct when the breaker or switch opens.

A practical solution for (1) and (2) is to observe actual breaker tripping, with a specified maximum time interval between trip tests. Clearing of naturally-occurring Faults are demonstrations of operation that reset the time interval clock for testing of each breaker tripped in this way. If Faults do not occur, manual tripping of the breaker through the relay trip output via data communications to the relay microprocessor meets the requirement for periodic testing.

PRC-005 does not address breaker maintenance, and its Protection System test requirements can be met by energizing the trip circuit in a test mode (breaker disconnected) through the relay microprocessor. This can be done via a front-panel button command to the relay logic, or application of a simulated Fault with a relay test set. However, utilities have found that breakers often show problems during Protection System tests. It is recommended that Protection System verification include periodic testing of the actual tripping of connected circuit breakers.

Testing of the relay-carrier set interface in (3) requires that each relay key its transmitter, and that the other relay demonstrate reception of that blocking carrier. This can be observed from relay or DFR records during naturally occurring Faults, or by a manual test. If the checkback test sequence were incorporated in the relay logic, the carrier sets and carrier channel are then included in the overlapping segments monitored by the two relays, and the monitoring gap is completely eliminated.

Appendix B

Protection System Maintenance Standard Drafting Team

Charles W. Rogers
Chairman
Consumers Energy Co.

John B. Anderson
Xcel Energy

Merle Ashton
Tri-State G&T

Bob Bentert
Florida Power & Light Company

Forrest Brock
Western Farmers Electric Cooperative

Aaron Feathers
Pacific Gas and Electric Company

Sam Francis
Oncor Electric Delivery

Carol Gerou
Midwest Reliability Organization

Russell C. Hardison
Tennessee Valley Authority

David Harper
NRG Texas Maintenance Services

James M. Kinney
FirstEnergy Corporation

Mark Lucas
ComEd

Kristina Marriott
ENOSERV

Al McMeekin
NERC

Michael Palusso
Southern California Edison

Mark Peterson
Great River Energy

John Schecter
American Electric Power

William D. Shultz
Southern Company Generation

Eric A. Udren
Quanta Technology

Scott Vaughan
City of Roseville Electric Department

Matthew Westrich
American Transmission Company

Philip B. Winston
Southern Company Transmission

David Youngblood
Luminant Power

John A. Zipp
ITC Holdings

Technical Justification

PRC-005-2 Protection System Maintenance

The purpose of the proposed PRC-005-2 Reliability Standard is to document and implement programs for the maintenance of all Protection Systems affecting the reliability of the Bulk Electric System (BES) so that these Protection Systems are kept in working order. The proposed Reliability Standard further combines the legacy Reliability Standards PRC-005-1, PRC-008-0, PRC-011-0, and PRC-017-0, as these legacy Reliability Standards have similar reliability goals and requirements. This purpose is consistent with NERC's goal to create and implement reliability standards that enable or support at least one of the eight, defined Reliability Principles. The requirements of the proposed PRC-005-1 Reliability Standard directly support the following Reliability Principles:

> Reliability Principle 1 – Interconnected bulk power systems shall be planned and operated in a coordinated manner to perform reliably under normal and abnormal conditions as defined in the NERC Standards.
>
> Reliability Principle 7 – The reliability of the interconnected bulk power systems shall be assessed, monitored, and maintained on a wide-area basis.

The existing PRC-005-1, PRC-008-0, PRC-011-0, and PRC-017-0 Reliability Standards, as assessed by the NERC System Protection and Control Task Force (SPCTF) in its report of March 8, 2007, contain several fundamental flaws within the requirements. Within this assessment, the SPCTF asserts, for all four standards, that:

> *"The listed requirements do not provide clear and sufficient guidance concerning the maintenance and testing of the Protection Systems to achieve the commonly stated purpose which is "To ensure all transmission and generation Protection Systems affecting the reliability of the Bulk Electric System (BES) are maintained and tested.""*

And further recommends that:

- *"The standards should clearly state which power system elements are being addressed."*
- *"The requirements should reflect the inherent differences between different technologies of protection systems."*
- *"The terms maintenance programs and testing programs should be clearly defined in the glossary. The terms "maintenance" and "testing" are not interchangeable, and the requirements must be clear in their application. Additional terms may also have to be added to the glossary for clarity."*
- *"The requirements of the existing standards, as stated, support time-based maintenance and testing, and should be expanded to include condition-based and performance-based maintenance and testing. The R1.2 summary of maintenance and testing procedures needs to*

have some minimum defined sub-requirements to insure that the stated intent of the standards is met to support review by the compliance monitor," and

- *The SPCTF recommends that standards PRC-005-1, PRC-008-0, PRC-011-0, and PRC-017-0 … be included in a new Standard Authorization Request for a single Protection System maintenance and testing standard.*

Relative to PRC-005-1, the Federal Energy Regulatory Commission (FERC), in Order 693 further directed in paragraph 1476:

"… the Commission directs the ERO to develop a modification to PRC–005–1 through the Reliability Standards development process that includes a requirement that maintenance and testing of a protection system must be carried out within a maximum allowable interval that is appropriate to the type of the protection system and its impact on the reliability of the Bulk-Power System. We further direct the ERO to consider FirstEnergy's and ISO–NE's suggestion to combine PRC–005–1, PRC–008–0, PRC–011–0, and PRC–017–0 into a single Reliability Standard through the Reliability Standards development process."

FERC offered, in paragraphs 1492, 1517, and 1547, similar directives regarding PRC-008-0, PRC-011-0, and PRC-017-0, respectively.

With the development of the proposed PRC-005-2 Reliability Standard, the drafting team for Project 2007-17 – Protection System Maintenance, has followed the observations and recommendation of the NERC SPCTF assessment of PRC-005-1, PRC-008-0, PRC-011-0, and PRC-017-0 including addressing FERC's directives from Order 693. The drafting team accomplishes this by:

1. Merging the reliability objectives of the four legacy standards.
2. Establishing minimum acceptable maintenance activities and accompanying maximum allowable maintenance intervals, reflecting various technologies of the components being addressed.
3. Providing entities the flexibility to implement condition-based maintenance by adjusting the minimum acceptable maintenance activities and maximum allowable maintenance intervals to reflect condition monitoring of the various Protection System components, and
4. Providing requirements for effective implementation of a performance-based maintenance program.

The proposed PRC-005-2 Reliability Standard includes five requirements that:

1. Combines the reliability goals of developing detailed tables of minimum maintenance activities and maximum maintenance intervals for all five component types addressed within the NERC definition of Protection System. These tables include adjustments to those activities and intervals to reflect the benefits of any condition monitoring that may be present.

2. Requires, within Requirement R1, that entities using a time-based maintenance program (which includes condition-based maintenance) shall establish a Protection System Maintenance Program (PSMP) that conforms to the tables described above.
3. Establishes, within Requirement R2, the opportunity and requirements for establishment of a performance-based maintenance program for those entities that have (or wish to develop) sufficient performance observations for their Protection System components such that they may determine maintenance intervals other than those specified within the tables while maintaining the level of reliability prescribed within the Standard.
4. Requires, within Requirements R3 and R4, that entities fully implement their PSMP as determined pursuant to Requirement R1 for time-based maintenance programs and Requirement R2 for performance-based maintenance programs, respectively.
5. Further requires, within Requirement R5, that entities initiate resolution of any issues discovered during maintenance that cause the entities to be unable to return the associated components to good working order. The drafting team elected to not require that entities complete the resolution of these issues, as the time required to effectively resolve the problems may vary widely depending on the scope of that resolution.

The proposed PRC-005-2 Reliability Standard provides a comprehensive set of requirements and associated information (within the tables) that define a strong PSMP. Entities that monitor the actual condition of their Protection System components are further empowered to utilize the monitoring to improve the efficiency and effectiveness of their PSMP, and those entities that have extensive performance data regarding their Protection System components to utilize that performance data to further improve the efficiency and effectiveness of their PSMP.

Requirement R1:

R1. Each Transmission Owner, Generator Owner, and Distribution Provider shall establish a Protection System Maintenance Program (PSMP) for its Protection Systems identified in Section 4.2. *[Violation Risk Factor: Medium] [Time Horizon: Operations Planning]*

The PSMP shall:

1.1. Identify which maintenance method (time-based, performance-based per PRC-005 Attachment A, or a combination) is used to address each Protection System Component Type. All batteries associated with the station dc supply Component Type of a Protection System shall be included in a time-based program as described in Table 1-4 and Table 3.

1.2. Include the applicable monitored Component attributes applied to each Protection System Component Type consistent with the maintenance intervals specified in Tables 1-1 through 1-5, Table 2, and Table 3 where monitoring is used to extend the maintenance intervals beyond those specified for unmonitored Protection System Components.

Background and Rationale

Establishment of a Protection System Maintenance Program as directed by Requirement R1 is needed to detect and correct plausible age- and service-related degradation of Protection System components. It is important that a Protection System continue to function as designed over its service life to ensure reliability of the Bulk Electric System.

Requirement R1 establishes that entities develop a comprehensive maintenance program for Protection System components addressing the elements specified in the Protection System Maintenance Program definition:

Protection System Maintenance Program (PSMP) — An ongoing program by which Protection System components are kept in working order and proper operation of malfunctioning components is restored. A maintenance program for a specific component includes one or more of the following activities:

- Verify — Determine that the component is functioning correctly.
- Monitor — Observe the routine in-service operation of the component.
- Test — Apply signals to a component to observe functional performance or output behavior, or to diagnose problems.
- Inspect — Examine for signs of component failure, reduced performance and degradation.
- Calibrate — Adjust the operating threshold or measurement accuracy of a measuring element to meet the intended performance requirement.

Maintenance and testing programs often incorporate the following types of maintenance practices:

- TBM – time-based maintenance – externally prescribed maximum maintenance or testing intervals are applied for components or groups of components. The intervals may have been developed from prior experience or manufacturers' recommendations. The TBM verification interval is based on a variety of factors, including experience of the particular asset owner, collective experiences of several asset owners who are members of a country or regional council, etc. The maintenance intervals are fixed, and may range in number of months or in years.

  TBM can include review of recent power system events near the particular terminal. Operating records may verify that some portion of the Protection System has operated correctly since the last test occurred. If specific protection scheme components have demonstrated correct performance within specifications, the maintenance test time clock can be reset for those components.

- PBM – performance-based maintenance - intervals are established based on analytical or historical results of TBM failure rates on a statistically significant population of similar components. Some level of TBM is generally followed. Statistical analyses accompanied by adjustments to maintenance intervals are used to justify continued use of PBM-developed extended intervals when test failures or in-service failures occur infrequently.

  The Performance Based Maintenance (PBM) program ensures no more than a 4% failure rate for each segment of a component type. There could be more or less than 4 failures per year depending on the population size of the segment. The 4% number was developed using the following:

  General experience of the drafting team based on open discussions of past performance.

  Test results provided by Consumers Energy for the years 1998-2008 showing a yearly average of 7.5% out-of-tolerance relay test results and a yearly average of 1.5% defective rate.

  Two failure analysis reports from Tennessee Valley Authority (TVA) where TVA identified problematic equipment based on a noticeably higher failure of a certain relay type (failure rate of 2.5%) and voltage transformer type (failure rate of 3.6%).

  Refer to Supplementary Reference and FAQ Document - Section 9.1 for a discussion and examples for the application of the 4% failure rate.

- CBM – condition-based maintenance – continuously or frequently reported results from non-disruptive self monitoring of components demonstrate operational status as those components remain in service. Whatever is verified by CBM does not require manual testing, but taking advantage of this requires precise technical focus on exactly what parts are included as part of the self diagnostics. While the term "Condition-Based-Maintenance" (CBM) is no longer used within the Standard itself, it is important to note that the concepts of CBM are a part of the Standard (in the form of extended time intervals through status-monitoring). These extended time intervals are only allowed (in the absence of PBM) if the condition of the device is monitored (CBM). As a consequence of the "monitored-basis-time-intervals" existing within the

Standard, the explanatory discussions within the Supplementary Reference and FAQ Document concerned with CBM will remain and are discussed as CBM.

A key feature of condition-based monitoring is that it effectively reduces the time delay between the moment of a protection failure and time the protection system owner knows about it, for the monitored segments of the protection system. In some cases, the verification is practically continuous - the time interval between verifications is minutes or seconds. Thus, technically sound, condition-based verification, meets the directives of FERC Order 693 even more effectively than the strictly time-based tests of the same system components while minimizing the potential for human performance errors during maintenance activities.

Microprocessor based Protection System components that perform continuous self-monitoring verify correct operation of most components within the device. Self-monitoring capabilities may include battery continuity, float voltages, unintentional grounds, the ac signal inputs to a relay, analog measuring circuits, processors and memory for measurement, protection, and data communications, trip circuit monitoring, and protection or data communications signals (and many, many more measurements). For those conditions, failure of a self-monitoring routine generates an alarm and may inhibit operation to avoid false trips. When internal components, such as critical output relay contacts, are not equipped with self-monitoring, they can be manually tested. The method of testing may be local or remote, or through inherent performance of the scheme during a system event.

TBM, PBM, and CBM can be combined for individual components, or within a complete Protection System. The following diagram illustrates the relationship between various types of maintenance practices described in this section. In the Venn diagram the overlapping regions show the relationship of TBM with PBM historical information and the inherent continuous monitoring offered through CBM.

This figure shows:

- Region 1: The TBM intervals that are increased based on known reported operational condition of individual components that are monitoring themselves.
- Region 2: The TBM intervals that are adjusted up or down based on results of analysis of maintenance history of statistically significant population of similar products that have been subject to TBM.
- Region 3: Optimal TBM intervals based on regions 1 and 2.

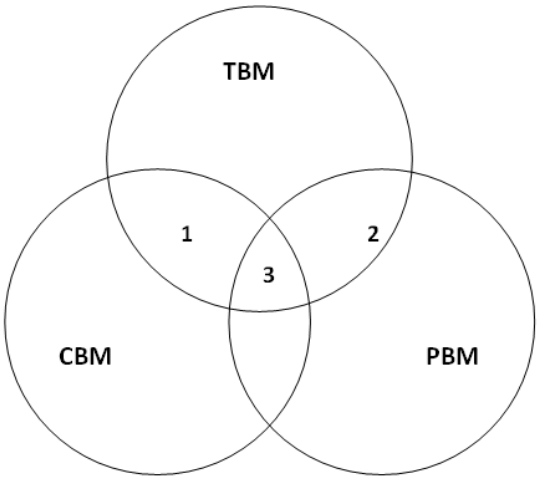

Relationship of time-based maintenance types

The PSMP shall:

R1, Part 1.1 Identify which maintenance method (time-based, performance-based per PRC-005 Attachment A, or a combination) is used to address each Protection System component type.

Requirement R1, Part 1.1 gives entities the flexibility to choose between the various methods listed above to maintain their Protection System equipment.

All batteries associated with the station dc supply Component Type of a Protection System shall be included in a time-based program as described in Table 1-4 and Table 3.

Batteries are the only element of a Protection System that is a perishable item with a shelf life. As a perishable item batteries require not only a constant float charge to maintain their freshness (charge), but periodic inspection to determine if there are problems associated with their aging process and testing to see if they are maintaining a charge or can still deliver their rated output as required.

Besides being perishable, a second unique feature of a battery that is unlike any other Protection System element is that a battery uses chemicals, metal alloys, plastics, welds, and bonds that must interact with each other to produce the constant dc source required for Protection Systems, undisturbed by ac system disturbances.

No type of battery manufactured today for Protection System application is free from problems that can only be detected over time by inspection and test. These problems can arise from variances in the manufacturing process, chemicals and alloys used in the construction of the individual cells, quality of welds and bonds to connect the components, the plastics used to make batteries and the cell forming process for the individual battery cells.

Other problems that require periodic inspection and testing can result from transportation from the factory to the job site, length of time before a charge is put on the battery, the method of installation, the voltage level and duration of equalize charges, the float voltage level used, and the environment that the battery is installed in.

All of the above mentioned factors and several more not discussed here are beyond the control of the Functional Entities that want to use a performance-based maintenance (PBM) program for its Protection Systems. These inherent variances in the aging process of a battery cell make establishment of a designated segment based on manufacturer and type of battery impossible.

Requirement R1, Part 1.2 Include the applicable monitored Component attributes applied to each Protection System Component Type consistent with the maintenance intervals specified in Tables 1-

1 through 1-5, Table 2, and Table 3 where monitoring is used to extend the maintenance intervals beyond those specified for unmonitored Protection System Components.

It is necessary for entities to specify the monitoring attributes utilized in their PSMP to demonstrate the existence of the monitoring elements which permit using the extended maintenance intervals established in Tables 1-1 through 1-5, Table 2, and Table 3 of the standard.

All maintenance is fundamentally time-based. Default time-based intervals are commonly established to assure proper functioning of each component of the Protection System, when data on the reliability of the components is not available other than observations from time-based maintenance. Excessive maintenance can actually decrease the reliability of the component or system. It is not unusual to cause failure of a component by removing it from service and restoring it. The improper application of test signals may cause failure of a component. Making use of the extended intervals by employing component monitoring minimizes human performance errors. The following factors may influence the established default intervals:

- If continuous indication of the functional condition of a component is available (from relays or chargers or any self monitoring device), then the intervals may be extended or manual testing may be eliminated. This is referred to as condition-based maintenance or CBM. CBM is valid only for precisely the components subject to monitoring. In the case of microprocessor-based relays, self-monitoring may not include automated diagnostics of every component within a microprocessor.
- Previous maintenance history for a group of components of a common type may indicate that the maintenance intervals can be extended while still achieving the desired level of performance. This is referred to as performance-based maintenance or PBM. It is also sometimes referred to as reliability-centered maintenance or RCM, but PBM is used in this document.
- Observed proper operation of a component may be regarded as a maintenance verification of the respective component or element in a microprocessor-based device. For such an observation, the maintenance interval may be reset only to the degree that can be verified by data available on the operation. For example, the trip of an electromechanical relay for a fault verifies the trip contact and trip path, but only through the relays in series that actually operated; one operation of this relay cannot verify correct calibration.

Requirement R2:

Overview

Requirement 2, stated below, deals with performance based maintenance. The requirement refers to Attachment A. Rather than simply list Attachment A, the requirements of Attachment A are listed below with a technical justification discussion for each. The criteria within Attachment A are largely based on application of statistical analysis theory.

Requirement R2

Requirement R2. Each Transmission Owner, Generator Owner, and Distribution Provider that uses performance-based maintenance intervals in its PSMP shall follow the procedure established in PRC-005 Attachment A to establish and maintain its performance-based intervals. *[Violation Risk Factor: Medium] [Time Horizon: Operations Planning]*

Background and Rationale

Performance-based maintenance (PBM) is included in PRC-005-2 to allow utilities to adjust maintenance intervals based on their individual experience with equipment types and manufacturer. The utility must create a segment of components with similar manufacturer and model characteristics of statistically significant size.

Segment – *Protection Systems or components of a consistent design standard, or a particular model or type from a single manufacturer that typically share other common elements. Consistent performance is expected across the entire population of a segment. A segment must contain at least sixty (60) individual components.*

Based on equipment failure(s) and out-of-tolerance(s), called Countable Events, in any given year, the utility then sets its maintenance interval to keep the Countable Events below 4%. Performance-based maintenance is discussed at length in Section 9.1 of the Supplementary Reference and FAQ Document for PRC-005-2. Many of the technical justifications shown below come from the Supplementary Reference and FAQ Document. Each criterion of Attachment A is individually discussed.

Countable Event – *A failure of a component requiring repair or replacement, any condition discovered during the maintenance activities in Tables 1-1 through 1-5 and Table 3 which requires corrective action, or a Misoperation attributed to hardware failure or calibration failure. Misoperations due to product design errors, software errors, relay settings different from specified settings, Protection System component configuration errors, or Protection System application errors are not included in Countable Events.*

1. Develop a list with a description of Components included in each designated Segment of the Protection System Component population, with a minimum Segment population of 60 Components.

   A sample size requirement can be estimated using the bound on the Error of

Distribution Formula when the expected result is of a "Pass/Fail" format and will be between 0 and 1.0.

The Error of Distribution Formula is:

$$B = z\sqrt{\frac{\pi(1-\pi)}{n}}$$

Where:

B = bound on the error of distribution (allowable error)

z = standard error

π = expected failure rate

n = sample size required

Solving for n provides:

$$n = \pi(1-\pi)\left(\frac{z}{B}\right)^2$$

One entity's population of components should be large enough to represent a sizeable sample of a vendor's overall population of manufactured devices. For this reason the following assumptions are made:
B = 5%
z = 1.96 (This equates to a 95% confidence level)
π = 4% (see number 5 below)
Using the equation above, n=59.0. The Standard Drafting Team chose to use the round number of 60 for the requirement.

2. Maintain the Components in each Segment according to the time-based maximum allowable intervals established in Tables 1-1 through 1-5 and Table 3 until results of maintenance activities for the Segment are available for a minimum of 30 individual Components of the Segment.

   An assumption that needs to be made when choosing a sample size is "the sampling distribution of the sample mean can be approximated by a normal probability distribution." The Central Limit Theorem states: "In selecting simple random samples of size *n* from a population, the sampling distribution of the sample mean *x* can be approximated by a normal probability distribution as the sample size becomes large." (Essentials of Statistics for Business and Economics, Anderson, Sweeney, Williams, 2003)

To use the Central Limit Theorem in statistics, the population size should be large. The references below are supplied to help define what is large.

> "… whenever we are using a large simple random sample (rule of thumb: n>=30), the central limit theorem enables us to conclude that the sampling distribution of the sample mean can be approximated by a normal distribution." (Essentials of Statistics for Business and Economics, Anderson, Sweeney, Williams, 2003)
>
> "If samples of size n, when n>=30, are drawn from any population with a mean *u* and a standard deviation σ, the sampling distribution of sample means approximates a normal distribution. The greater the sample size, the better the approximation." (Elementary Statistics - Picturing the World, Larson, Farber, 2003)
>
> "The sample size is large (generally n>=30)… (Introduction to Statistics and Data Analysis - Second Edition, Peck, Olson, Devore, 2005)
>
> "… the normal is often used as an approximation to the *t* distribution in a test of a null hypothesis about the mean of a normally distributed population when the population variance is estimated from a relatively large sample. A sample size exceeding 30 is often given as a minimal size in this connection." (Statistical Analysis for Business Decisions, Peters, Summers, 1968)

3. Document the maintenance program activities and results for each Segment, including maintenance dates and Countable Events for each included Component.

   This criterion needs little justification. To analyze system performance, the activities and results must be documented.

4. Analyze the maintenance program activities and results for each Segment to determine the overall performance of the Segment and develop maintenance intervals.

   This criterion states the obvious for a program that is based on the performance results of the Segment.

5. Determine the maximum allowable maintenance interval for each Segment such that the Segment experiences **Countable Events** on no more than 4% of the Components within the Segment, for the greater of either the last 30 Components maintained or all Components maintained in the previous year.

The performance-based maintenance (PBM) program ensures no more than a 4% failure rate for each segment of a Component Type. The 4% number was developed using the following:

- General experience of the drafting team based on open discussions of past performance.
- Test results provided by Consumers Energy for the years 1998-2008 showing a yearly average of 7.5% out-of-tolerance relay test results and a yearly average of 1.5% defective rate.
- Two failure analysis reports from Tennessee Valley Authority (TVA) where TVA identified problematic equipment based on a noticeably higher failure of a certain relay type (failure rate of 2.5%) and voltage transformer type (failure rate of 3.6%).

In addition to the number "30" discussion from number 2 above, the Error of Distribution formula discussed in number 1 above allows the number of components that should be included in a sample size for evaluation of the appropriate testing interval to be smaller because a lower confidence level is acceptable since the sample testing is repeated or updated annually. For this reason, the following assumptions are made:
B = 5%
z = 1.44 (85% confidence level)
π = 4%
Using the equation above, n=31.8. The Standard Drafting Team chose to use the round number of 30.

To maintain the technical justification for the ongoing use of a performance-based PSMP, the following additional criteria are provided:

1. At least annually, update the list of Protection System Components and Segments and/or description if any changes occur within the Segment.

   "Annually" was chosen as a reasonable time frame to update Component Segments due to Component installation, replacement, and retirement.

2. Perform maintenance on the greater of 5% of the Components (addressed in the performance based PSMP) in each Segment or 3 individual Components within the Segment in each year.

   Note: this 5% threshold sets a practical limitation on total length of time between intervals at 20 years regardless of performance.

   This criterion ensures that a utility keeps a flow of recent data to use in its annual analysis. The Standard Drafting Team felt that 20 years was the maximum time that should be allowed before a Component should be checked or maintained. The minimum number of three allows for the same 20 years interval based on the minimum Segment population of 60 (60/3=20).

3. For the prior year, analyze the maintenance program activities and results for each Segment to determine the overall performance of the Segment.

   Note: "Annually" was chosen as a reasonable time frame to allow for collection of new data to update the program's performance analysis.
4. Using the prior year's data, determine the maximum allowable maintenance interval for each Segment such that the Segment experiences Countable Events on no more than 4% of the Components within the Segment, for the greater of either the last 30 Components maintained or all Components maintained in the previous year.

   Note: Refer to number 5 above.

5. If the Components in a Protection System Segment maintained through a performance-based PSMP experience 4% or more Countable Events, develop, document, and implement an action plan to reduce the Countable Events to less than 4% of the Segment population within 3 years.

   Note: The 4% number is discussed in number 5 above. Three years was chosen by the drafting team because it allows time to modify the program and for the effects of a modified program to be observed.

Requirement R3:

R3. Each Transmission Owner, Generator Owner, and Distribution Provider that utilizes time-based maintenance programs shall maintain its Protection System Components that are included within the time-based maintenance program in accordance with the minimum maintenance activities and maximum maintenance intervals prescribed within Tables 1-1 through 1-5, Table 2, and Table 3. *[Violation Risk Factor: High] [Time Horizon: Operations Planning]*

Background and Rationale

NERC Reliability Principle 1 establishes that "Interconnected bulk power systems shall be planned and operated in a coordinated manner to perform reliably under normal and abnormal conditions as defined in the NERC Standards."

NERC Reliability Principle 7 establishes that "The reliability of the interconnected bulk power systems shall be assessed, monitored, and maintained on a wide-area basis."

The proper performance of Protection Systems is fundamental to the reliability of the Bulk Electric System (BES) as embodied in Reliability Principles 1 and 7, and proper performance of Protection Systems cannot be assured without periodic maintenance of those systems.

Therefore, Requirement R3 requires the implementation of the minimum maintenance activities and maximum allowable maintenance intervals as elucidated in Requirement R1 and the tables within the standard.

Requirement R4:

R4. Each Transmission Owner, Generator Owner, and Distribution Provider that utilizes performance-based maintenance program(s) in accordance with Requirement R2 shall implement and follow its PSMP for its Protection System Components that are included within the performance-based program(s). *[Violation Risk Factor: High] [Time Horizon: Operations Planning]*

Background and Rationale

NERC Reliability Principle 1 establishes that "Interconnected bulk power systems shall be planned and operated in a coordinated manner to perform reliably under normal and abnormal conditions as defined in the NERC Standards."

NERC Reliability Principle 7 establishes that "The reliability of the interconnected bulk power systems shall be assessed, monitored, and maintained on a wide-area basis."

The proper performance of Protection Systems is fundamental to the reliability of the Bulk Electric System (BES) as embodied in Reliability Principles 1 and 7, and proper performance of Protection Systems cannot be assured without periodic maintenance of those systems.

Therefore, Requirement R4 requires the implementation of an entity's Protection System Maintenance Program established pursuant to Requirement R2.

Requirement R5:

R5. Each Transmission Owner, Generator Owner, and Distribution Provider shall demonstrate efforts to correct identified Unresolved Maintenance Issues. *[Violation Risk Factor: Medium] [Time Horizon: Operations Planning]*

Unresolved Maintenance Issue *- A deficiency identified during a maintenance activity that causes the component to not meet the intended performance, cannot be corrected during the maintenance interval, and requires follow-up corrective action.*

Background and Rationale

The reliability objective of this requirement is to assure that Protection System components are returned to working order following the discovery of failures or malfunctions during scheduled maintenance. The maintenance activities specified in the Tables 1-1 through 1-5, Table 2, and Table 3 do not present any requirements related to restoration; therefore Requirement R5 of the Standard was developed to require the entity to "demonstrate efforts to correct identified Unresolved Maintenance Issues".

The drafting team does not believe entities should be found in violation of a maintenance program requirement because of the inability to complete a remediation program within the original maintenance interval. The drafting team does believe corrective actions should be timely but concludes it would be impossible to postulate all possible remediation projects and therefore, impossible to specify bounding time frames for resolution of all possible Unresolved Maintenance Issues or what documentation might be sufficient to provide proof that effective corrective action has been initiated. Therefore Requirement R5 requires only the entity demonstrate efforts to correct the Unresolved Maintenance Issues.

Management of completion of the identified Unresolved Maintenance Issue is a complex topic that falls outside of the scope of this standard. There can be any number of supply, process and management problems that make setting repair deadlines impossible. The drafting team specifically chose to require the entity to "demonstrate efforts to correct …" because of the concern that many more complex Unresolved Maintenance Issues might require greater than the remaining maintenance interval to resolve. For example, a problem might be identified on a VRLA battery during a 6 month check. In instances such as one that requiring battery replacement as part of the long term resolution, it is highly unlikely that the battery could be replaced in time to meet the 6 calendar month requirement for this maintenance activity.

During the period of time that the Protection System is operating in a degraded mode, NERC Standard PRC-001-1 requires that operating entities be informed of any Protection System failures that reduce reliability, and several NERC IRO-series and TOP-series standards require that operating entities operate the system in a manner that assures reliability while recognizing any system degradation.

Technical Justification

PRC-005-2 Protection System Maintenance

The purpose of the proposed PRC-005-2 Reliability Standard is to document and implement programs for the maintenance of all Protection Systems affecting the reliability of the Bulk Electric System (BES) so that these Protection Systems are kept in working order. The proposed Reliability Standard further combines the legacy Reliability Standards PRC-005-1, PRC-008-0, PRC-011-0, and PRC-017-0, as these legacy Reliability Standards have similar reliability goals and requirements. This purpose is consistent with NERC's goal to create and implement reliability standards that enable or support at least one of the eight, defined Reliability Principles. The requirements of the proposed PRC-005-1 Reliability Standard directly support the following Reliability Principles:

> Reliability Principle 1 – Interconnected bulk power systems shall be planned and operated in a coordinated manner to perform reliably under normal and abnormal conditions as defined in the NERC Standards.
>
> Reliability Principle 7 – The reliability of the interconnected bulk power systems shall be assessed, monitored, and maintained on a wide-area basis.

The existing PRC-005-1, PRC-008-0, PRC-011-0, and PRC-017-0 Reliability Standards, as assessed by the NERC System Protection and Control Task Force (SPCTF) in its report of March 8, 2007, contain several fundamental flaws within the requirements. Within this assessment, the SPCTF asserts, for all four standards, that:

> *"The listed requirements do not provide clear and sufficient guidance concerning the maintenance and testing of the Protection Systems to achieve the commonly stated purpose which is "To ensure all transmission and generation Protection Systems affecting the reliability of the Bulk Electric System (BES) are maintained and tested.""*

And further recommends that:

- *"The standards should clearly state which power system elements are being addressed."*
- *"The requirements should reflect the inherent differences between different technologies of protection systems."*
- *"The terms maintenance programs and testing programs should be clearly defined in the glossary. The terms "maintenance" and "testing" are not interchangeable, and the requirements must be clear in their application. Additional terms may also have to be added to the glossary for clarity."*
- *"The requirements of the existing standards, as stated, support time-based maintenance and testing, and should be expanded to include condition-based and performance-based maintenance and testing. The R1.2 summary of maintenance and testing procedures needs to*

have some minimum defined sub-requirements to insure that the stated intent of the standards is met to support review by the compliance monitor," and

- *The SPCTF recommends that standards PRC-005-1, PRC-008-0, PRC-011-0, and PRC-017-0 … be included in a new Standard Authorization Request for a single Protection System maintenance and testing standard.*

Relative to PRC-005-1, the Federal Energy Regulatory Commission (FERC), in Order 693 further directed in paragraph 1476:

"… the Commission directs the ERO to develop a modification to PRC–005–1 through the Reliability Standards development process that includes a requirement that maintenance and testing of a protection system must be carried out within a maximum allowable interval that is appropriate to the type of the protection system and its impact on the reliability of the Bulk-Power System. We further direct the ERO to consider FirstEnergy's and ISO–NE's suggestion to combine PRC–005–1, PRC–008–0, PRC–011–0, and PRC–017–0 into a single Reliability Standard through the Reliability Standards development process."

FERC offered, in paragraphs 1492, 1517, and 1547, similar directives regarding PRC-008-0, PRC-011-0, and PRC-017-0, respectively.

With the development of the proposed PRC-005-2 Reliability Standard, the ~~Standard Drafting Team (SDT)~~drafting team for Project 2007-17 – Protection System Maintenance, has followed the observations and recommendation of the NERC SPCTF assessment of PRC-005-1, PRC-008-0, PRC-011-0, and PRC-017-0~~. The SDT also~~including addressing~~ed~~ FERC's directives from Order 693. The ~~SDT~~ drafting team accomplishes this by:

1. Merging the reliability objectives of the four legacy standards.
2. Establishing minimum acceptable maintenance activities and accompanying maximum allowable maintenance intervals, reflecting various technologies of the components being addressed.
3. Providing entities the flexibility to implement condition-based maintenance by adjusting the minimum acceptable maintenance activities and maximum allowable maintenance intervals to reflect condition monitoring of the various Protection System components, and
4. Providing requirements for effective implementation of a performance-based maintenance program.

The proposed PRC-005-2 Reliability Standard includes five requirements that:

1. Combines the reliability goals of developing detailed tables of minimum maintenance activities and maximum maintenance intervals for all five component types addressed within the NERC definition of Protection System. These tables include adjustments to those activities and intervals to reflect the benefits of any condition monitoring that may be present.

2. Requires, within Requirement R1, that entities using a time-based maintenance program (which includes condition-based maintenance) shall establish a Protection System Maintenance Program (PSMP) that conforms to the tables described above.
3. Establishes, within Requirement R2, the opportunity and requirements for establishment of a performance-based maintenance program for those entities that have (or wish to develop) sufficient performance observations for their Protection System components such that they may determine maintenance intervals other than those specified within the tables while maintaining the level of reliability prescribed within the Standard.
4. Requires, within Requirements R3 and R4, that entities fully implement their PSMP as determined pursuant to Requirement R1 for time-based maintenance programs and Requirement R2 for performance-based maintenance programs, respectively.
5. Further requires, within Requirement R5, that entities initiate resolution of any issues discovered during maintenance that cause the entities to be unable to return the associated components to good working order. The ~~SDT~~ drafting team -elected to not require that entities complete the resolution of these issues, as the time required to effectively resolve the problems may vary widely depending on the scope of that resolution.

The proposed PRC-005-2 Reliability Standard provides a comprehensive set of requirements and associated information (within the tables) that define a strong PSMP. Entities that monitor the actual condition of their Protection System components are further empowered to utilize the monitoring to improve the efficiency and effectiveness of their PSMP, and those entities that have extensive performance data regarding their Protection System components to utilize that performance data to further improve the efficiency and effectiveness of their PSMP.

Requirement R1:

R1. Each Transmission Owner, Generator Owner, and Distribution Provider shall establish a Protection System Maintenance Program (PSMP) for its Protection Systems identified in Section 4.2. *[Violation Risk Factor: Medium] [Time Horizon: Operations Planning]*

The PSMP shall:

1.1. Identify which maintenance method (time-based, performance-based ~~(~~per PRC-005 Attachment A~~)~~, or a combination) is used to address each Protection System ~~component~~ Component ~~type~~Type. All batteries associated with the station dc supply ~~component~~ Component ~~type~~ Type of a Protection System shall be included in a time-based program as described in Table 1-4 and Table 3.

1.2. Include the applicable monitored~~ing~~ Component attributes applied to each Protection System ~~component~~ Component ~~type~~ Type consistent with the maintenance intervals specified in Tables 1-1 through 1-5, Table 2, and Table 3 where monitoring is used to extend the maintenance intervals beyond those specified for unmonitored Protection System ~~components~~Components.

Background and Rationale

Establishment of a Protection System Maintenance Program as directed by Requirement R1 is needed to detect and correct plausible age- and service-related degradation of Protection System components. ~~To ensure reliability of the Bulk Electric System, it~~ It is important that a Protection System continue to function as designed over its service life to ensure reliability of the Bulk Electric System.

Requirement R1 establishes that entities develop a comprehensive maintenance program for Protection System components addressing the elements specified in the Protection System Maintenance Program definition:

Protection System Maintenance Program (PSMP) — An ongoing program by which Protection System components are kept in working order and proper operation of malfunctioning components is restored. A maintenance program for a specific component includes one or more of the following activities:

- Verify — Determine that the component is functioning correctly.
- Monitor — Observe the routine in-service operation of the component.
- Test — Apply signals to a component to observe functional performance or output behavior, or to diagnose problems.
- Inspect — Examine for~~Detect visible~~ signs of component failure, reduced performance and degradation.

- Calibrate — Adjust the operating threshold or measurement accuracy of a measuring element to meet the intended performance requirement.

Maintenance and testing programs often incorporate the following types of maintenance practices:

- TBM – time-based maintenance – externally prescribed maximum maintenance or testing intervals are applied for components or groups of components. The intervals may have been developed from prior experience or manufacturers' recommendations. The TBM verification interval is based on a variety of factors, including experience of the particular asset owner, collective experiences of several asset owners who are members of a country or regional council, etc. The maintenance intervals are fixed, and may range in number of months or in years.

  TBM can include review of recent power system events near the particular terminal. Operating records may verify that some portion of the Protection System has operated correctly since the last test occurred. If specific protection scheme components have demonstrated correct performance within specifications, the maintenance test time clock can be reset for those components.

- PBM – ~~Performance~~performance-~~Based~~ based ~~Maintenance~~ maintenance - intervals are established based on analytical or historical results of TBM failure rates on a statistically significant population of similar components. Some level of TBM is generally followed. Statistical analyses accompanied by adjustments to maintenance intervals are used to justify continued use of PBM-developed extended intervals when test failures or in-service failures occur infrequently.

  The Performance Based Maintenance (PBM) program ensures no more than a 4% failure rate for each segment of a component type. There could be more or less than 4 failures per year depending on the population size of the segment. The 4% number was developed using the following:

  General experience of the drafting team based on open discussions of past performance.

  Test results provided by Consumers Energy for the years 1998-2008 showing a yearly average of 7.5% out-of-tolerance relay test results and a yearly average of 1.5% defective rate.

  Two failure analysis reports from Tennessee Valley Authority (TVA) where TVA identified problematic equipment based on a noticeably higher failure of a certain relay type (failure rate of 2.5%) and voltage transformer type (failure rate of 3.6%).

  - Refer to Supplementary Reference and FAQ Document - Section 9.1 for a discussion and examples for the application of the 4% failure rate.

- CBM – condition-based maintenance – continuously or frequently reported results from non-disruptive self monitoring of components demonstrate operational status as those components remain in service. Whatever is verified by CBM does not require manual testing, but taking

advantage of this requires precise technical focus on exactly what parts are included as part of the self diagnostics. While the term "Condition-Based-Maintenance" (CBM) is no longer used within the Standard itself, it is important to note that the concepts of CBM are a part of the Standard (in the form of extended time intervals through status-monitoring). These extended time intervals are only allowed (in the absence of PBM) if the condition of the device is monitored (CBM). As a consequence of the "monitored-basis-time-intervals" existing within the Standard, the explanatory discussions within ~~this~~ the Supplementary Reference and FAQ Document concerned with CBM will remain ~~in this reference~~ and are discussed as CBM.

A key feature of condition-based monitoring is that it effectively reduces the time delay between the moment of a protection failure and time the protection system owner knows about it, for the monitored segments of the protection system. In some cases, the verification is practically continuous - the time interval between verifications is minutes or seconds. Thus, technically sound, condition-based verification, meets the directives of FERC Order 693 even more effectively than the strictly time-based tests of the same system components while minimizing the potential for human performance errors during maintenance activities.

Microprocessor based Protection System components that perform continuous self-monitoring verify correct operation of most components within the device. Self-monitoring capabilities may include battery continuity, float voltages, unintentional grounds, the ac signal inputs to a relay, analog measuring circuits, processors and memory for measurement, protection, and data communications, trip circuit monitoring, and protection or data communications signals (and many, many more measurements). For those conditions, failure of a self-monitoring routine generates an alarm and may inhibit operation to avoid false trips. When internal components, such as critical output relay contacts, are not equipped with self-monitoring, they can be manually tested. The method of testing may be local or remote, or through inherent performance of the scheme during a system event.

TBM, PBM, and CBM can be combined for individual components, or within a complete Protection System. The following diagram illustrates the relationship between various types of maintenance practices described in this section. In the Venn diagram the overlapping regions show the relationship of TBM with PBM historical information and the inherent continuous monitoring offered through CBM.

This figure shows:

- Region 1: The TBM intervals that are increased based on known reported operational condition of individual components that are monitoring themselves.
- Region 2: The TBM intervals that are adjusted up or down based on results of analysis of maintenance history of statistically significant population of similar products that have been subject to TBM.
- Region 3: Optimal TBM intervals based on regions 1 and 2.

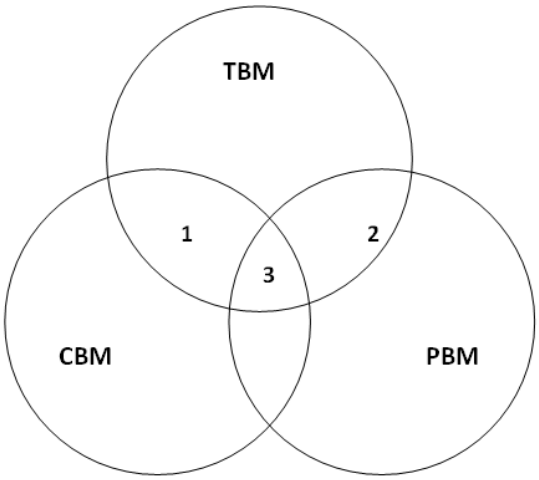

Relationship of time-based maintenance types

The PSMP shall:

R1, Part 1.1 Identify which maintenance method (time-based, performance-based ~~(~~per PRC-005 Attachment A~~)~~, or a combination) is used to address each Protection System component type.

Requirement R1, Part 1.1 gives entities the flexibility to choose between the various methods listed above to maintain their Protection System equipment.

All batteries associated with the station dc supply ~~component~~ Component ~~type~~ Type of a Protection System shall be included in a time-based program as described in Table 1-4 and Table 3.

Batteries are the only element of a Protection System that is a perishable item with a shelf life. As a perishable item batteries require not only a constant float charge to maintain their freshness (charge), but periodic inspection to determine if there are problems associated with their aging process and testing to see if they are maintaining a charge or can still deliver their rated output as required.

Besides being perishable, a second unique feature of a battery that is unlike any other Protection System element is that a battery uses chemicals, metal alloys, plastics, welds, and bonds that must interact with each other to produce the constant dc source required for Protection Systems, undisturbed by ac system disturbances.

No type of battery manufactured today for Protection System application is free from problems that can only be detected over time by inspection and test. These problems can arise from variances in the manufacturing process, chemicals and alloys used in the construction of the individual cells, quality of welds and bonds to connect the components, the plastics used to make batteries and the cell forming process for the individual battery cells.

Other problems that require periodic inspection and testing can result from transportation from the factory to the job site, length of time before a charge is put on the battery, the method of installation, the voltage level and duration of equalize charges, the float voltage level used, and the environment that the battery is installed in.

All of the above mentioned factors and several more not discussed here are beyond the control of the Functional Entities that want to use a performance-based ~~Protection System Maintenance~~ maintenance (PBM) program for its Protection Systems. These inherent variances in the aging process of a battery cell make establishment of a designated segment based on manufacturer and type of battery impossible.

Requirement R1, Part 1.2 Include the applicable monitored~~ing~~ Component attributes applied to each Protection System ~~component~~ Component ~~type~~ Type consistent with the maintenance intervals specified in Tables 1-1 through 1-5, Table 2, and Table 3 where monitoring is used to extend the maintenance intervals beyond those specified for unmonitored Protection System ~~components~~Components.

It is necessary for entities to specify the monitoring attributes utilized in their PSMP to demonstrate the existence of the monitoring elements which permit using the extended maintenance intervals established in Tables 1-1 through 1-5, Table 2, and Table 3 of the standard.

All maintenance is fundamentally time-based. Default time-based intervals are commonly established to assure proper functioning of each component of the Protection System, when data on the reliability of the components is not available other than observations from time-based maintenance. Excessive maintenance can actually decrease the reliability of the component or system. It is not unusual to cause failure of a component by removing it from service and restoring it. The improper application of test signals may cause failure of a component. Making use of the extended intervals by employing component monitoring minimizes human performance errors. The following factors may influence the established default intervals:

- If continuous indication of the functional condition of a component is available (from relays or chargers or any self monitoring device), then the intervals may be extended or manual testing may be eliminated. This is referred to as condition-based maintenance or CBM. CBM is valid only for precisely the components subject to monitoring. In the case of microprocessor-based relays, self-monitoring may not include automated diagnostics of every component within a microprocessor.
- Previous maintenance history for a group of components of a common type may indicate that the maintenance intervals can be extended while still achieving the desired level of performance. This is referred to as ~~Performance~~performance-~~Based~~ based ~~Maintenance~~ maintenance or PBM. It is also sometimes referred to as reliability-centered maintenance or RCM, but PBM is used in this document.
- Observed proper operation of a component may be regarded as a maintenance verification of the respective component or element in a microprocessor-based device. For such an observation, the maintenance interval may be reset only to the degree that can be verified by data available on the operation. For example, the trip of an electromechanical relay for a fault verifies the trip contact and trip path, but only through the relays in series that actually operated; one operation of this relay cannot verify correct calibration.

Requirement R2:

Overview

Requirement 2, stated below, deals with ~~Performance~~ performance ~~Based~~ based ~~Maintenance~~maintenance. The requirement refers to Attachment A. Rather than simply list Attachment A, the requirements of Attachment A are listed below with a technical justification discussion for each. The criteria within Attachment A are largely based on application of statistical analysis theory.

Requirement R2

Requirement R2. Each Transmission Owner, Generator Owner, and Distribution Provider that uses performance-based maintenance intervals in its PSMP shall follow the procedure established in PRC-005 Attachment A to establish and maintain its performance-based intervals. *[Violation Risk Factor: Medium] [Time Horizon: Operations Planning]*

Background and Rationale

~~Performance~~ Performance-b~~B~~ased ~~Maintenance~~ maintenance (PBM) is included in PRC-005-2 to allow utilities to adjust maintenance intervals based on their individual experience with equipment types and manufacturer. The utility must create a segment of components with similar manufacturer and model characteristics of statistically significant size.

> **Segment** – *Protection Systems or components of a consistent design standard, or a particular model or type from a single manufacturer that typically share other common elements. Consistent performance is expected across the entire population of a segment. A segment must contain at least sixty (60) individual components.*

Based on equipment failure(s) and out-of-tolerance(s), called ~~countable~~ Countable ~~events~~Events, in any given year, the utility then sets its maintenance interval to keep the ~~countable~~ Countable ~~events~~ Events below 4%. ~~Performance~~ Performance-b~~B~~ased ~~Maintenance~~ maintenance is discussed at length in Section 9.1 of the Supplementary~~l~~ Reference and FAQ Document for PRC-005-2. Many of the technical justifications shown below come from ~~of~~ the ~~Supplemental~~ Supplementary Reference and FAQ Document. Each ~~requirement~~ criterion of Attachment A ~~will now be listed~~is ~~and~~ individually discussed.

> **Countable Event** – *A failure of a component ~~which has failed and requires~~requiring repair or replacement, any condition discovered during the maintenance activities in Tables 1-1 through 1-5 and Table 3 which requires corrective action, or a Misoperation attributed to hardware failure or calibration failure. Misoperations due to product design errors, software errors, relay settings different from specified settings, Protection System component configuration errors, or Protection System application errors are not included in Countable Events.*

1. Develop a list with a description of ~~components~~ Components included in each designated ~~segment~~ Segment of the

Protection System ~~component~~ Component population, with a minimum ~~segment~~ Segment population of 60 ~~components~~Components.

A sample size requirement can be estimated using the bound on the Error of Distribution Formula when the expected result is of a "Pass/Fail" format and will be between 0 and 1.0.

The Error of Distribution Formula is:

$$B = z\sqrt{\frac{\pi(1-\pi)}{n}}$$

Where:

B = bound on the error of distribution (allowable error)

z = standard error

π = expected failure rate

n = sample size required

Solving for n provides:

$$n = \pi(1-\pi)\left(\frac{z}{B}\right)^2$$

One entity's population of components should be large enough to represent a sizeable sample of a vendor's overall population of manufactured devices. For this reason the following assumptions are made:
B = 5%
z = 1.96 (This equates to a 95% confidence level)
π = 4% (see number 5 below)
Using the equation above, n=59.0. The Standard Drafting Team chose to use the round number of 60 for the requirement.

2. Maintain the ~~components~~ Components in each ~~segment~~ Segment according to the time-based maximum allowable intervals established in Tables 1-1 through 1-5 and Table 3 until results of maintenance activities for the ~~segment~~ Segment are available for a minimum of 30 individual ~~components~~ Components of the ~~segment~~Segment.

   An assumption that needs to be made when choosing a sample size is "the sampling distribution of the sample mean can be approximated by a normal probability distribution." The Central Limit Theorem states: "In selecting simple random samples of size *n* from a population, the sampling distribution of the sample mean *x* can be approximated by a normal

probability distribution as the sample size becomes large." (Essentials of Statistics for Business and Economics, Anderson, Sweeney, Williams, 2003)

To use the Central Limit Theorem in statistics, the population size should be large. The references below are supplied to help define what is large.

> "… whenever we are using a large simple random sample (rule of thumb: n>=30), the central limit theorem enables us to conclude that the sampling distribution of the sample mean can be approximated by a normal distribution." (Essentials of Statistics for Business and Economics, Anderson, Sweeney, Williams, 2003)
>
> "If samples of size n, when n>=30, are drawn from any population with a mean *u* and a standard deviation σ, the sampling distribution of sample means approximates a normal distribution. The greater the sample size, the better the approximation." (Elementary Statistics - Picturing the World, Larson, Farber, 2003)
>
> "The sample size is large (generally n>=30)… (Introduction to Statistics and Data Analysis - Second Edition, Peck, Olson, Devore, 2005)
>
> "… the normal is often used as an approximation to the *t* distribution in a test of a null hypothesis about the mean of a normally distributed population when the population variance is estimated from a relatively large sample. A sample size exceeding 30 is often given as a minimal size in this connection." (Statistical Analysis for Business Decisions, Peters, Summers, 1968)

3. Document the maintenance program activities and results for each ~~segment~~Segment, including maintenance dates and ~~countable~~ Countable ~~events~~ Events for each included ~~component~~Component.

   This ~~requirement~~ criterion needs little justification. To analyze system performance, the activities and results must be documented.

4. Analyze the maintenance program activities and results for each ~~segment~~ Segment to determine the overall performance of the ~~segment~~ Segment and develop maintenance intervals.

   This ~~requirement~~ criterion states the obvious for a program that is based on the performance results of the ~~segment~~Segment.

5. Determine the maximum allowable maintenance interval for each ~~segment~~ Segment such that the ~~segment~~ Segment experiences ~~**countable**~~ **Countable** ~~**events**~~ **Events** on no more than 4% of the ~~components~~ Components within the ~~segment~~Segment, for the greater of either the last 30

~~components~~ Components maintained or all ~~components~~ Components maintained in the previous year.

The ~~Performance~~ performance-b~~B~~based ~~Maintenance~~ maintenance (PBM) program ensures no more than a 4% failure rate for each segment of a ~~component~~ Component ~~type~~Type. The 4% number was developed using the following:

- General experience of the drafting team~~Standard Drafting Team (SDT)~~ based on open discussions of past performance.
- Test results provided by Consumers Energy for the years 1998-2008 showing a yearly average of 7.5% out-of-tolerance relay test results and a yearly average of 1.5% defective rate.
- Two failure analysis reports from Tennessee Valley Authority (TVA) where TVA identified problematic equipment based on a noticeably higher failure of a certain relay type (failure rate of 2.5%) and voltage transformer type (failure rate of 3.6%).

In addition to the number "30" discussion from number 2 above, the Error of Distribution formula discussed in number 1 above allows the number of components that should be included in a sample size for evaluation of the appropriate testing interval to be smaller because a lower confidence level is acceptable since the sample testing is repeated or updated annually. For this reason, the following assumptions are made:

B = 5%

z = 1.44 (85% confidence level)

π = 4%

Using the equation above, n=31.8. The Standard Drafting Team chose to use the round number of 30.

To maintain the technical justification for the ongoing use of a performance-based PSMP, the following additional criteria are provided:

~~6.~~1. At least annually, update the list of Protection System ~~components~~ Components and ~~segments~~ Segments and/or description if any changes occur within the ~~segment~~Segment.

"Annually" was chosen as a reasonable time frame to update ~~component~~ Component ~~segments~~ Segments due to ~~component~~ Component installation, replacement, and retirement.

~~7.~~2. Perform maintenance on the greater of 5% of the ~~components~~ Components (addressed in the performance based PSMP) in each ~~segment~~ Segment or 3 individual ~~components~~ Components within the ~~segment~~ Segment in each year.

Note: this 5% threshold sets a practical limitation on total length of time between intervals at 20 years regardless of performance.

This ~~requirement~~ criterion ensures that a utility keeps a flow of recent data to use in its annual analysis. The Standard Drafting Team felt that 20 years was the maximum time that should be allowed before a ~~component~~ Component should be checked or maintained. The minimum number of three allows for the same 20 years interval based on the minimum ~~segment~~ Segment population of 60 (60/3=20).

~~8.~~3. For the prior year, analyze the maintenance program activities and results for each ~~segment~~ Segment to determine the overall performance of the ~~segment~~Segment.

Note: "Annually" was chosen as a reasonable time frame to allow for collection of new data to update the program's performance analysis.

~~9.~~4. Using the prior year's data, determine the maximum allowable maintenance interval for each ~~segment~~ Segment such that the ~~segment~~ Segment experiences ~~countable~~ Countable ~~events~~ Events on no more than 4% of the ~~components~~ Components within the ~~segment~~Segment, for the greater of either the last 30 ~~components~~ Components maintained or all ~~components~~ Components maintained in the previous year.

Note: Refer to number 5 above.

~~10.~~5. If the ~~components~~ Components in a Protection System ~~segment~~ Segment maintained through a performance-based PSMP experience 4% or more ~~countable~~ Countable ~~events~~Events, develop, document, and implement an action plan to reduce the ~~countable~~ Countable ~~events~~ Events to less than 4% of the ~~segment~~ Segment population within 3 years.

Note: The 4% number is discussed in number 5 above. Three years was chosen by the drafting team~~Standard Drafting Team~~ because it allows time to modify the program and for the effects of a modified program to be observed.

Requirement R3:

R3. Each Transmission Owner, Generator Owner, and Distribution Provider that utilizes time-based maintenance programs shall maintain its Protection System ~~components~~ Components that are included within the time-based maintenance program in accordance with the minimum maintenance activities and maximum maintenance intervals prescribed within Tables 1-1 through 1-5, Table 2, and Table 3. *[Violation Risk Factor: High] [Time Horizon: Operations Planning]*

Background and Rationale

NERC Reliability Principle 1 establishes that "Interconnected bulk power systems shall be planned and operated in a coordinated manner to perform reliably under normal and abnormal conditions as defined in the NERC Standards."

NERC Reliability Principle 7 establishes that “The reliability of the interconnected bulk power systems shall be assessed, monitored, and maintained on a wide-area basis.”

The proper performance of Protection Systems is fundamental to the reliability of the Bulk Electric System (BES) as embodied in Reliability Principles 1 and 7, and proper performance of Protection Systems cannot be assured without periodic maintenance of those systems.

Therefore, Requirement R3 requires the implementation of the minimum maintenance activities and maximum allowable maintenance intervals as elucidated in Requirement R1 and the tables within the standard.

Requirement R4:

R4. Each Transmission Owner, Generator Owner, and Distribution Provider that utilizes performance-based maintenance program(s) in accordance with Requirement R2 shall implement and follow its PSMP for its Protection System ~~components~~ Components that are included within the performance-based program(s). *[Violation Risk Factor: High] [Time Horizon: Operations Planning]*

Background and Rationale

NERC Reliability Principle 1 establishes that "Interconnected bulk power systems shall be planned and operated in a coordinated manner to perform reliably under normal and abnormal conditions as defined in the NERC Standards."

NERC Reliability Principle 7 establishes that "The reliability of the interconnected bulk power systems shall be assessed, monitored, and maintained on a wide-area basis."

The proper performance of Protection Systems is fundamental to the reliability of the Bulk Electric System (BES) as embodied in Reliability Principles 1 and 7, and proper performance of Protection Systems cannot be assured without periodic maintenance of those systems.

Therefore, Requirement R4 requires the implementation of an entity's Protection System Maintenance Program established pursuant to Requirement R2.

Requirement R5:

R5. Each Transmission Owner, Generator Owner, and Distribution Provider shall demonstrate efforts to correct identified Unresolved Maintenance Issues. *[Violation Risk Factor: Medium] [Time Horizon: Operations Planning]*

Unresolved Maintenance Issue *- A deficiency identified during a maintenance activity that causes the component to not meet the intended performance, cannot be corrected during the maintenance interval, and requires follow-up corrective action.*

Background and Rationale

The reliability objective of this requirement is to assure that Protection System components are returned to working order following the discovery of failures or malfunctions during scheduled maintenance. The maintenance activities specified in the Tables 1-1 through 1-5, Table 2, and Table 3 do not present any requirements related to restoration; therefore Requirement R5 of the Standard was developed to require the entity to "demonstrate efforts to correct identified ~~unresolved~~ Unresolved ~~maintenance~~ Maintenance ~~issues~~Issues".

The drafting team~~SDT~~ does not believe entities should be found in violation of a maintenance program requirement because of the inability to complete a remediation program within the original maintenance interval. The ~~SDT~~drafting team does believe corrective actions should be timely but concludes it would be impossible to postulate all possible remediation projects and therefore, impossible to specify bounding time frames for resolution of all possible ~~unresolved~~ Unresolved M~~m~~aintenance I~~i~~ssues or what documentation might be sufficient to provide proof that effective corrective action has been initiated. Therefore Requirement R5 requires only the entity demonstrate efforts to correct the ~~unresolved~~ Unresolved ~~maintenance~~ Maintenance ~~issues~~Issues.

Management of completion of the identified U~~u~~nresolved M~~m~~aintenance I~~i~~ssue is a complex topic that falls outside of the scope of this standard. There can be any number of supply, process and management problems that make setting repair deadlines impossible. The ~~SDT~~ drafting team specifically chose to require the entity to "demonstrate efforts to correct …" because of the concern that many more complex U~~u~~nresolved ~~maintenance~~ Maintenance ~~issues~~ Issues might require greater than the remaining maintenance interval to resolve. For example, a problem might be identified on a VRLA battery during a 6 month check. In instances such as one that requiring battery replacement as part of the long term resolution, it is highly unlikely that the battery could be replaced in time to meet the 6 calendar month requirement for this maintenance activity.

During the period of time that the Protection System is operating in a degraded mode, NERC Standard PRC-001-1 requires that operating entities be informed of any Protection System failures that reduce reliability, and several NERC IRO-series and TOP-series standards require that operating entities operate the system in a manner that assures reliability while recognizing any system degradation.

NERC
NORTH AMERICAN ELECTRIC RELIABILITY CORPORATION

Project 2007-17 Protection System Maintenance and Testing Mapping Document

Mapping Document Showing Translation of PRC-005-1b – Transmission and Generation Protection System Maintenance and Testing, PRC-008-0- Implementation and Documentation of Underfrequency Load Shedding Equipment Maintenance Program, PRC-011-0 – Undervoltage Load Shedding System Maintenance and Testing, and PRC-017-0 - Special Protection System Maintenance and Testing into PRC-005-2 – Protection System Maintenance.

Standard: PRC-005-1b - Transmission and Generation Protection System Maintenance and Testing		
Requirement in Approved Standard	**Translation to New Standard or Other Action**	**Proposed Language in PRC-005-2 – Protection System Maintenance Or Comment**
R1. Each Transmission Owner and any Distribution Provider that owns a transmission Protection System and each Generator Owner that owns a generation Protection System shall have Protection System maintenance and testing program for Protection Systems that affect the reliability of the BES. The program shall include: R1.1. Maintenance and testing intervals and their basis. R1.2. Summary of maintenance and testing procedures.	PRC-005-2, R1 and PRC-005-2, R2 PRC-005-2, Tables 1-1 through 1-5, Table 2, and Table 3.	R1. Each Transmission Owner, Generator Owner, and Distribution Provider shall establish a Protection System Maintenance Program (PSMP) for its Protection Systems identified in Section 4.2. The PSMP shall: 1.1. Identify which maintenance method (time-based, performance-based per PRC-005 Attachment A, or a combination) is used to address each Protection System Component Type. All batteries associated with the station dc supply Component Type of a Protection System shall be included in a time-based program as described in Table 1-4 and Table 3. 1.2. Include the applicable monitored Component attributes applied to each Protection System Component Type consistent with the maintenance intervals specified in Tables 1-1 through 1-5, Table 2, and Table 3 where monitoring is used to extend the maintenance intervals beyond

Standard: PRC-005-1b - Transmission and Generation Protection System Maintenance and Testing		
Requirement in Approved Standard	**Translation to New Standard or Other Action**	**Proposed Language in PRC-005-2 – Protection System Maintenance Or Comment**
		those specified for unmonitored Protection System Components. R2. Each Transmission Owner, Generator Owner, and Distribution Provider that uses performance-based maintenance intervals in its PSMP shall follow the procedure established in PRC-005 Attachment A to establish and maintain its performance-based intervals. See PRC-005-2 Tables 1-1 through 1-5, Table 2, and Table 3. The Tables establish prescribed maximum intervals and minimum maintenance activities, and, as such, the entity no longer needs to establish the basis for their intervals.
R2. Each Transmission Owner and any Distribution Provider that owns a transmission Protection System and each Generator Owner that owns a generation Protection System shall provide documentation of its Protection System maintenance and testing program and the implementation of that program to its Regional Reliability Organization on request (within 30 calendar days). The documentation of the program implementation shall include: R2.1. Evidence Protection System devices were maintained and tested within	PRC-005-2, R3 PRC-005-2, R4, PRC-005-2, M3, PRC-005-2, M4 NERC Compliance Monitoring Enforcement Program Data Retention 1.3	R3. Each Transmission Owner, Generator Owner, and Distribution Provider that utilizes time-based maintenance programs shall maintain its Protection System Components that are included within the time-based maintenance program in accordance with the minimum maintenance activities and maximum maintenance intervals prescribed within Tables 1-1 through 1-5, Table 2, and Table 3. R4. Each Transmission Owner, Generator Owner, and Distribution Provider that utilizes performance-based maintenance programs in accordance with Requirement R2 shall implement and follow its PSMP for its Protection System Components that are included within the performance-based program. The legacy requirement that the entity provide the program results to the RRO and NERC on

Standard: PRC-005-1b - Transmission and Generation Protection System Maintenance and Testing		
Requirement in Approved Standard	**Translation to New Standard or Other Action**	**Proposed Language in PRC-005-2 – Protection System Maintenance Or Comment**
the defined intervals. R2.2. Date each Protection System device was last tested/maintained.		request is addressed in the NERC Compliance Monitoring Enforcement Program. M3. Each Transmission Owner, Generator Owner, and Distribution Provider that utilizes time-based maintenance programs shall have evidence that it has maintained its Protection System Components included within its time-based program in accordance with Requirement R3. The evidence may include but is not limited to dated maintenance records, dated maintenance summaries, dated check-off lists, dated inspection records, or dated work orders. M4. Each Transmission Owner, Generator Owner, and Distribution Provider that utilizes a performance-based maintenance program in accordance with Requirement R2 shall have evidence that it has implemented the Protection System Maintenance Program for the Protection System Components included in its performance-based program in accordance with Requirement R4. The evidence may include but is not limited to dated maintenance records, dated maintenance summaries, dated check-off lists, dated inspection records, or dated work orders. 1.3 Data Retention For Requirement R2, Requirement R3, Requirement R4, and Requirement R5, the Transmission Owner, Generator Owner, and Distribution Provider shall each keep documentation of the two most recent

Standard: PRC-005-1b - Transmission and Generation Protection System Maintenance and Testing		
Requirement in Approved Standard	**Translation to New Standard or Other Action**	**Proposed Language in PRC-005-2 – Protection System Maintenance Or Comment**
		performances of each distinct maintenance activity for the Protection System Components, or all performances of each distinct maintenance activity for the Protection System Component since the previous scheduled audit date, whichever is longer.

Standard: PRC-008-0 - Implementation and Documentation of Underfrequency Load Shedding Equipment Maintenance Program		
Requirement in Approved Standard	**Translation to New Standard or Other Action**	**Proposed Language in PRC-005-2 – Protection System Maintenance or Comments**
R1. The Transmission Owner and Distribution Provider with a UFLS program (as required by its Regional Reliability Organization) shall have a UFLS equipment maintenance and testing program in place. This UFLS equipment maintenance and testing program shall include UFLS equipment identification, the schedule for UFLS equipment testing, and the schedule for UFLS equipment maintenance.	PRC-005-2, R1, R2, R3, R4, and Applicability 4.2.2 Tables 1-1 – 1-5, Table 2, and Table 3	See mapping of Requirements R1 and R2 for PRC-005-1 above. 4.2 Facilities 4.2.2 Protection Systems used for Underfrequency load-shedding systems installed per ERO Underfrequency load-shedding requirements. See PRC-005-2 Tables 1-1 through 1-5, Table 2, and Table 3. The Tables establish prescribed maximum intervals and minimum maintenance activities, and, as such, the entity no longer needs to establish the basis for their intervals.
R2. The Transmission Owner and Distribution Provider with a UFLS program (as required by its Regional Reliability Organization) shall implement its UFLS equipment maintenance and testing program and shall provide UFLS maintenance and testing program results to its Regional Reliability Organization and NERC on request (within 30 calendar days).	PRC-005-2, R3, PRC-002, R4 PRC-005-2, M3, and PRC-005-2 M4 NERC Compliance Monitoring Enforcement Program	See mapping of Requirements R1 and R2 for PRC-005-1 above. The legacy requirement that the entity provide the program results to the RRO and NERC on request is addressed in the NERC Compliance Monitoring Enforcement Program.

Standard: PRC-011-0 - Undervoltage Load Shedding System Maintenance and Testing		
Requirement in Approved Standard	**Translation to New Standard or Other Action**	**Proposed Language in PRC-005-2 – Protection System Maintenance or Comments**
R1. The Transmission Owner and Distribution Provider that owns a UVLS system shall have a UVLS equipment maintenance and testing program in place. This program shall include: **R1.1.** The UVLS system identification which shall include but is not limited to: **R1.1.1.** Relays. **R1.1.2.** Instrument transformers. **R1.1.3.** Communications systems, where appropriate. **R1.1.4.** Batteries. **R1.2.** Documentation of maintenance and testing intervals and their basis. **R1.3.** Summary of testing procedure. **R1.4.** Schedule for system testing. **R1.5.** Schedule for system maintenance. **R1.6.** Date last tested/maintained.	PRC-005-2, R1, PRC-005-2, R2, PRC-005-2, R3, PRC-005-2, R4, PRC-005-2 M3, PRC-005-2, M4, and PRC-005-2 Applicability 4.2.3 Tables 1-1 – 1-5, Table 2, and Table 3 Data Retention 1.3	See mapping of Requirements R1, and R2 for PRC-005-1 above. 4.2 Facilities 4.2.3 Protection Systems used for undervoltage load-shedding systems installed to prevent system voltage collapse or voltage instability for BES reliability. See PRC-005-2 Tables 1-1 through 1-5, Table 2, and Table 3. The Tables establish prescribed maximum intervals and minimum maintenance activities, and, as such, the entity no longer needs to establish the basis for their intervals. 1.3 Data Retention For Requirement R2, Requirement R3, Requirement R4, and Requirement R5, the Transmission Owner, Generator Owner, and Distribution Provider shall each keep documentation of the two most recent performances of each distinct maintenance activity for the Protection System Components, or all performances of each distinct maintenance activity for the Protection System Component since the previous scheduled audit date, whichever is longer.
R2. The Transmission Owner and Distribution Provider that owns a UVLS system shall provide documentation of its	NERC Compliance Monitoring Enforcement	The legacy requirement that the entity provide the program results to the RRO and NERC on request is addressed in the NERC Compliance

Standard: PRC-011-0 - Undervoltage Load Shedding System Maintenance and Testing		
Requirement in Approved Standard	**Translation to New Standard or Other Action**	**Proposed Language in PRC-005-2 – Protection System Maintenance or Comments**
UVLS equipment maintenance and testing program and the implementation of that UVLS equipment maintenance and testing program to its Regional Reliability Organization and NERC on request (within 30 calendar days).	Program	Monitoring Enforcement Program

Standard: PRC-017-0 - Special Protection System Maintenance and Testing		
Requirement in Approved Standard	**Translation to New Standard or Other Action**	**Proposed Language in PRC-005-2 – Protection System Maintenance or Comments**
R1. The Transmission Owner, Generator Owner, and Distribution Provider that owns an SPS shall have a system maintenance and testing program(s) in place. The program(s) shall include: **R1.1.** SPS identification shall include but is not limited to: **R1.1.1.** Relays. **R1.1.2.** Instrument transformers. **R1.1.3.** Communications systems, where appropriate. **R1.1.4.** Batteries. **R1.2.** Documentation of maintenance and testing intervals and their basis. **R1.3.** Summary of testing procedure. **R1.4.** Schedule for system testing. **R1.5.** Schedule for system maintenance. **R1.6.** Date last tested/maintained.	PRC-005-2, R1, PRC-005-2, R2, PRC-005-2, R3, PRC-005-2, R4, PRC-005-2 M3, PRC-005-2, M4, and PRC-005-2 Applicability 4.2.4 Tables 1-1 – 1-5, and Table 2 Data Retention 1.3	See mapping of Requirements R1, and R2 for PRC-005-1 above. 4.2 Facilities 4.2.4 Protection Systems installed as a Special Protection System (SPS) for BES reliability. See PRC-005-2 Tables 1-1 through 1-5 and Table 2. The Tables establish prescribed maximum intervals and minimum maintenance activities, and, as such, the entity no longer needs to establish the basis for their intervals. 1.3 Data Retention For Requirement R2, Requirement R3, Requirement R4, and Requirement R5, the Transmission Owner, Generator Owner, and Distribution Provider shall each keep documentation of the two most recent performances of each distinct maintenance activity for the Protection System Components, or all performances of each distinct maintenance activity for the Protection System Component since the previous scheduled audit date, whichever is longer.

Standard: PRC-017-0 - Special Protection System Maintenance and Testing		
Requirement in Approved Standard	**Translation to New Standard or Other Action**	**Proposed Language in PRC-005-2 – Protection System Maintenance Or Comment**
R2. The Transmission Owner, Generator Owner, and Distribution Provider that owns an SPS shall provide documentation of the program and its implementation to the appropriate Regional Reliability Organizations and NERC on request (within 30 calendar days).	NERC Compliance Monitoring Enforcement Program	R1. The legacy requirement that the entity provide the program results to the RRO and NERC on request is addressed in the NERC Compliance Monitoring Enforcement Program

Internal Project Report

Project 2007-17
Protection System Maintenance and Testing

Issues -

Fill in the Blank Team

ISSUE: Okay if PRC-006 is fixed

"Okay if PRC-006 is fixed"

Assigned: Project 2007-17 - Protection System Maintenance and Testing

Addressed

Applicability section of PRC-005-2 (4.2.2) establishes applicability to UFLS established in accordance with ERO requirements.

Status: In Drafting Delivery: 11/7/2012

Solution Details: Applicability section of PRC-005-2 (4.2.2) establishes applicability to UFLS established in accordance with ERO requirements.

NERC Audit Observation Team

ISSUE: As applicable, each TO,DP and GOP shall have a protection system maintenance and testing program for protection systems that affect the reliability of the BES. Does this include major equipment like circuit breakers and transformers?

"As applicable, each TO,DP and GOP shall have a protection system maintenance and testing program for protection systems that affect the reliability of the BES. Does this include major equipment like circuit breakers and transformers?"

Assigned: Project 2007-17 - Protection System Maintenance and Testing

Addressed

Maintenance of Protection Systems on all BES equipment is included within this standard. See definition of Protection System.

Status: In Drafting Delivery: 11/7/2012

Solution Details: Maintenance of Protection Systems on all BES equipment is included within this standard. Circuit breakers and power transformers are not included in the definition of Protection System; instrument transformers are included within the definition. See definition of Protection System.

ISSUE: Determine what on schedule means. Is an entity who maintained/tested 95% of their relays at the same level of non-compliance as an entity who maintained/tested 10% of their relays?

"Determine what on schedule means. Is an entity who maintained/tested 95% of their relays at the same level of non-compliance as an entity who maintained/tested 10% of their relays?"

Assigned: Project 2007-17 - Protection System Maintenance and Testing

Addressed

The VSLs for maintenance program implementations (Requirements R3 and R4) establish different VSLs depending on the degree to which the program is implemented.

Status: In Drafting Delivery: 11/7/2012

Solution Details: The VSLs for maintenance program implementations (Requirements R3 and R4) have been phased such that an entity that misses only a few required activities will be at a lower VSL than entities that miss many such activities.

ISSUE: How do you verify compliance for for cts/pts? How do you audit these within a scheduled maintenance program. As part of the procedure, most have accepted visual inspection. Some entities state that testing of the relays verify functionality of the ct/pts

"How do you verify compliance for for cts/pts? How do you audit these within a scheduled maintenance program. As part of the procedure, most have accepted visual inspection. Some entities state that testing of the relays verify functionality of the ct/pts"

Assigned: Project 2007-17 - Protection System Maintenance and Testing

Addressed

Specific activities for current and voltage transformers have been defined within Table 1-3.

Status: In Drafting Delivery: 11/7/2012

Solution Details: Verification activities in Table 1-3 establish the activities required for the voltage and current sensing inputs to protective relays and associated circuitry from the voltage and current sensing devices.

ISSUE: How do you verify DC control power? All regions require functional testing of the breaker. This should include functional relay & station battery checks, including breaker tripping, not just a visual inspection.

"How do you verify DC control power? All regions require functional testing of the breaker. This should include functional relay & station battery checks, including breaker tripping, not just a visual inspection."

Assigned: Project 2007-17 - Protection System Maintenance and Testing

Addressed

Specific verification activities are established in Table 1-4.

Status: In Drafting Delivery: 11/7/2012

Solution Details: Specific activities for maintenance of dc control circuitry have been defined within Table 1-4. These activities include periodic verification of proper functioning of the dc control circuitry

Phase III/IV Team

ISSUE: All generation protection systems whose misoperations impact the bulk electric system

"All generation protection systems whose misoperations impact the bulk electric system"

Assigned: Project 2007-17 - Protection System Maintenance and Testing

Addressed

Specificity is provided in Applicability 4.2.5 addressing maintenance of Protection Systems for generator facilities.

Status: In Drafting Delivery: 11/7/2012

Solution Details: Specificity is provided in Applicability 4.2.5 addressing maintenance of Protection Systems for generator facilities.

ISSUE: All protection systems on the bulk electric system.

"All protection systems on the bulk electric system."

Assigned: Project 2007-17 - Protection System Maintenance and Testing

Addressed

The Applicabilty section of the standard defines the facilities to which the standard applies.

Status: In Drafting Delivery: 11/7/2012

Solution Details: The Applicabilty section of the standard defines the facilities to which the standard applies.

ISSUE: Modify applicability to clarfify that the requirements are applicable to the following:

"Modify applicability to clarfify that the requirements are applicable to the following:"

Assigned: Project 2007-17 - Protection System Maintenance and Testing

Addressed

The applicability section has been modified.

Status: In Drafting Delivery: 11/7/2012

Solution Details: The applicability section has been modified.

ISSUE: Need to add language to ensure the Regional Requirements focus on the most impactive scenarios

"Need to add language to ensure the Regional Requirements focus on the most impactive scenarios"

Assigned: Project 2007-17 - Protection System Maintenance and Testing

Addressed

The draft standard establishes minimim ERO-wide requirements; any Regional requirements would have to exceed the ERO requirements.

Status: In Drafting Delivery: 11/7/2012

Solution Details: The draft standard establishes minimim ERO-wide requirements; any Regional requirements would have to exceed the ERO requirements.

ISSUE: PRC 003 to 005 only address generator (and transmission) protective systems, without defining this term.

"PRC 003 to 005 only address generator (and transmission) protective systems, without defining this term."

Assigned: Project 2007-17 - Protection System Maintenance and Testing

Addressed

The applicability section addresses Protection Systems designed to provide protection for BES Element(s), and provides additional specificity regarding applicable generator Protection Systems.

Status: In Drafting Delivery: 11/7/2012

Solution Details: The applicability section addresses Protection Systems designed to provide protection for BES Element(s), and provides additional specificity regarding applicable generator Protection Systems.

ISSUE: There is no performance requirement or measure of effectiveness of a maintenance program required by the standard

"There is no performance requirement or measure of effectiveness of a maintenance program required by the standard"

Assigned: Project 2007-17 - Protection System Maintenance and Testing

Addressed

For Time-Based (or Condition-Based) maintenance, minimum activities and maximum intervals are specified; for performance-based maintenance, performance (or effectiveness) goals are established.

Status: In Drafting Delivery: 11/7/2012

Solution Details: For Time-Based (or Condition-Based) maintenance, minimum activities and maximum intervals are specified; for performance-based maintenance, performance (or effectiveness) goals are established.

Version 0 Team

ISSUE: Consistent wording from standard to standard required

"Consistent wording from standard to standard required"

Assigned: Project 2007-17 - Protection System Maintenance and Testing

Addressed

The SDT is combining the four legacy standards into one.

Status: In Drafting Delivery: 11/7/2012

Solution Details: The SDT is combining the four legacy standards into one.

ISSUE: Define evidence

"Define evidence"

Assigned: Project 2007-17 - Protection System Maintenance and Testing

Addressed

Requirements R3 and R4 state that the programs must be implemented. Evidence that the program is implemented is included in the Measures M3 and M4.

Status: In Drafting Delivery: 11/7/2012

Solution Details: Requirements R3 and R4 state that the programs must be implemented. Evidence that the program is implemented is included in the Measures M3 and M4.

ISSUE: Define evidence

"Define evidence"

Assigned: Project 2007-17 - Protection System Maintenance and Testing

Addressed

Requirements R3 and R4 state that the programs must be implemented. Evidence that the program is implemented is included in the Measures M3 and M4.

Status: In Drafting Delivery: 11/7/2012

Solution Details: Requirements R3 and R4 state that the programs must be implemented. Evidence that the program is implemented is included in the Measures M3 and M4.

ISSUE: Define evidence

"Define evidence"

Assigned: Project 2007-17 - Protection System Maintenance and Testing

Addressed

Requirements R3 and R4 state that the programs must be implemented. Evidence that the program is implemented is included in the Measures M3 and M4.

Status: In Drafting Delivery: 11/7/2012

Solution Details: Requirements R3 and R4 state that the programs must be implemented. Evidence that the program is implemented is included in the Measures M3 and M4.

ISSUE: Definition of evidence required

"Definition of evidence required"

Assigned: Project 2007-17 - Protection System Maintenance and Testing

Addressed

Requirements R3 and R4 state that the programs must be implemented. Evidence that the program is implemented is included in the Measures M3 and M4.

Status: In Drafting Delivery: 11/7/2012

Solution Details: Requirements R3 and R4 state that the programs must be implemented. Evidence that the program is implemented is included in the Measures M3 and M4.

ISSUE: Exemptions for those with shunt reactors

"Exemptions for those with shunt reactors"

Assigned: Project 2007-17 - Protection System Maintenance and Testing

Addressed

UV Relays on shunt reactors is not UVLS; these relays would be included as pertinent to relays ""applied on or to protect the BES"".

Status: In Drafting Delivery: 11/7/2012

Solution Details: UV Relays on shunt reactors is not UVLS; these relays would be included as pertinent to relays "applied on or to protect the BES".

ISSUE: Include breakers/switches in list

"Include breakers/switches in list"

Assigned: Project 2007-17 - Protection System Maintenance and Testing

Addressed

Breakers/switches are specifically NOT included in the Protection System definition, and therefore NOT addressed in the draft standard.

Status: In Drafting Delivery: 11/7/2012

Solution Details: Breakers/switches are specifically NOT included in the Protection System definition, and therefore NOT addressed in the draft standard.

ISSUE: Need to retain two dates

"Need to retain two dates"

Assigned: Project 2007-17 - Protection System Maintenance and Testing

Addressed

The Standard requires that data be retained for the last two maintenance intervals or to the last audit, whichever is longer.

Status: In Drafting Delivery: 11/7/2012

Solution Details: The Standard requires that data be retained for the last two maintenance intervals or to the last audit, whichever is longer.

FERC Staff

ISSUE: Definition of Protection System Maintenance Program (PSMP)

"Draft PRC-005-2 R3 does not address what maintenance means in the context of the standard itself. The standard only requires documentation of protection system maintenance and testing program with supporting documentation that devices were maintained and tested within the intervals defined in the process document and the date that each device was last tested and/or maintained. The ambiguity that arose was with a program that defines scheduled maintenance and testing, as opposed to just stating maintenance in general, but not unscheduled, leaving a gap in the plan"

Assigned: Project 2007-17 - Protection System Maintenance and Testing

Addressed

Definition of PSMP addresses key concerns

Status: In Drafting Delivery: 11/7/2012

Solution Details: Protection System Maintenance Program (PSMP) is defined within PRC-005-2 as "An ongoing program by which Protection System components are kept in working order and proper operation of malfunctioning components is restored." Further details are included, and this term is intended to be placed into the NERC Glossary of Terms when approved. <#CR><#LF>These concerns are otherwise beyond the scope of this standard, as reflected by the directives of FERC Order 693.<#CR><#LF>

Directives -

Mandatory Reliability Standards for the Bulk-Power System (Order 693)

DIRECTIVE: S- Ref 10351 - Maintenance and testing of a protection system must be carried out within a maximum allowable time interval that is appropriate for the type of protection system and its impact on the reliability of the bulk power system. 1

Due 4/10/2012

Para 1475

"1475. In addition, for the reasons discussed in the NOPR, the Commission directs the ERO to develop a modification to PRC-005-1 through the Reliability Standards
development process that includes a requirement that maintenance and testing of a protection system must be carried out within a maximum allowable interval that is
appropriate to the type of the protection system and its impact on the reliability of the Bulk-Power System."

Assigned: Project 2007-17 - Protection System Maintenance and Testing

Addressed

Specific maximum allowable intervals are included in the draft standard within Tables 1-1 through 1-5, and Table 2 for time-based programs.

Status: In Drafting Delivery: 2012

Solution Details: Specific maximum allowable intervals are included in the draft standard within Tables 1-1 through 1-5, and Table 2 for time-based programs. Also adding a requirement allowing performance-based maintenance intervals.

DIRECTIVE: S- Ref 10352 - Consider FirstEnergys and ISO-NEs suggestions to combine PRC-005, PRC-008, PRC-011, and PRC-017 into a single standard.

Para 1475

"Consider FirstEnergys and ISO-NEs suggestions to combine PRC-005, PRC-008, PRC-011, and PRC-017 into a single standard."

Assigned: Project 2007-17 - Protection System Maintenance and Testing

Addressed

These suggestions were adopted. The SDT is combining the four legacy standards into one.

Status: In Drafting Delivery: 2012

Solution Details: These suggestions were adopted. The SDT is combining the four legacy standards into one.

DIRECTIVE: S- Ref 10355 - Maintenance and testing of a protection system must be carried out within a maximum allowable time interval that is appropriate for the type of protection system and its impact on the reliability of the bulk power system.

Due 4/10/2012

Para 1492

"1492. In addition, the Commission directs the ERO to develop a modification to PRC-008-0 through the Reliability Standards development process that includes a requirement that maintenance and testing of a protection system must be carried out within a maximum allowable interval that is appropriate to the type of the protection system and its impact on the reliability of the Bulk-Power System."

Assigned: Project 2007-17 - Protection System Maintenance and Testing

Addressed

Specific maximum allowable intervals are included in the draft standard within Tables 1-1 through 1-5, and Table 3 for time-based programs.

Status: In Drafting Delivery: 2012

Solution Details: Specific maximum allowable intervals are included in the draft standard within Tables 1-1 through 1-5, and Table 3 for time-based programs. Also adding a requirement allowing performance-based maintenance intervals.

DIRECTIVE: S- Ref 10358 - Maintenance and testing of a protection system must be carried out within a maximum allowable time interval that is appropriate for the type of protection system and its impact on the reliability of the bulk power system.

Due 4/10/2012

Para 1516

"1516. The Commission believes that the proposal is presently part of the process. The Commission approves Reliability Standard PRC-011-0 as mandatory and enforceable. In addition, the Commission directs the ERO to submit a modification to PRC-011-0 through the Reliability Standards development process that includes a requirement that maintenance and testing of a protection system must be carried out within a maximum allowable interval that is appropriate to the type of the protection system and its impact on the reliability of the Bulk-Power System."

Assigned: Project 2007-17 - Protection System Maintenance and Testing

Addressed

Specific maximum allowable intervals are included in the draft standard within Tables 1-1 through 1-5, Table 2, and Table 3 for time-based programs.

Status: In Drafting Delivery: 2012

Solution Details: Specific maximum allowable intervals are included in the draft standard within Tables 1-1 through 1-5, Table 2, and Table 3 for time-based programs. Also adding a requirement allowing performance-based maintenance intervals.

DIRECTIVE: S- Ref 10362 - Maintenance and testing of a protection system must be carried out within a maximum allowable time interval that is appropriate for the type of protection system and its impact on the reliability of the bulk power system.

Para 1546

"Maintenance and testing of a protection system must be carried out within a maximum allowable time interval that is appropriate for the type of protection system and its impact on the reliability of the bulk power system."

Assigned: Project 2007-17 - Protection System Maintenance and Testing

Addressed

Specific maximum allowable intervals are included in the draft standard within Tables 1-1 through 1-5, and Table 2 for time-based programs. Also adding a requirement allowing performance-based maintenance intervals.

Status: In Drafting Delivery: 2012

Solution Details: Specific maximum allowable intervals are included in the draft standard within Tables 1-1 through 1-5, and Table 2 for time-based programs. Also adding a requirement allowing performance-based maintenance intervals.

Project 2007-17 – PRC-005-2 Protection System Maintenance

This document provides the drafting team's justification for assignment of violation risk factors (VRFs) and violation severity levels (VSLs) for each requirement in PRC-005-2 — Protection System Maintenance.

Each primary requirement is assigned a VRF and a set of one or more VSLs. These elements support the determination of an initial value range for the Base Penalty Amount regarding violations of requirements in FERC-approved Reliability Standards, as defined in the ERO Sanction Guidelines.

The Protection System Maintenance and Testing Standard Drafting Team applied the following NERC criteria and FERC Guidelines when proposing VRFs and VSLs for the requirements under this project:

NERC Criteria - Violation Risk Factors

High Risk Requirement
A requirement that, if violated, could directly cause or contribute to bulk electric system instability, separation, or a cascading sequence of failures, or could place the bulk electric system at an unacceptable risk of instability, separation, or cascading failures; or, a requirement in a planning time frame that, if violated, could, under emergency, abnormal, or restorative conditions anticipated by the preparations, directly cause or contribute to bulk electric system instability, separation, or a cascading sequence of failures, or could place the bulk electric system at an unacceptable risk of instability, separation, or cascading failures, or could hinder restoration to a normal condition.

Medium Risk Requirement
A requirement that, if violated, could directly affect the electrical state or the capability of the bulk electric system, or the ability to effectively monitor and control the bulk electric system. However, violation of a medium risk requirement is unlikely to lead to bulk electric system instability, separation, or cascading failures; or, a requirement in a planning time frame that, if violated, could, under emergency, abnormal, or restorative conditions anticipated by the preparations, directly and adversely affect the electrical state or capability of the bulk electric system, or the ability to effectively monitor, control, or restore the bulk electric system. However, violation of a medium risk requirement is unlikely, under emergency, abnormal, or restoration conditions anticipated by the preparations, to lead to bulk electric system instability, separation, or cascading failures, nor to hinder restoration to a normal condition.

Lower Risk Requirement
A requirement that is administrative in nature and a requirement that, if violated, would not be expected to adversely affect the electrical state or capability of the bulk electric system, or the ability to effectively monitor and control the bulk electric system; or, a requirement that is administrative in nature and a requirement in a planning time frame that, if violated, would not, under the emergency, abnormal, or restorative conditions anticipated by the preparations, be expected to adversely affect the electrical state or capability of the bulk electric system, or the ability to effectively monitor, control, or restore the bulk electric system. A planning requirement that is administrative in nature.

FERC Violation Risk Factor Guidelines

Guideline (1) — Consistency with the Conclusions of the Final Blackout Report

The Commission seeks to ensure that Violation Risk Factors assigned to Requirements of Reliability Standards in these identified areas appropriately reflect their historical critical impact on the reliability of the Bulk-Power System.
In the VSL Order, FERC listed critical areas (from the Final Blackout Report) where violations could severely affect the reliability of the Bulk-Power System:

- Emergency operations
- Vegetation management
- Operator personnel training
- Protection systems and their coordination
- Operating tools and backup facilities
- Reactive power and voltage control
- System modeling and data exchange
- Communication protocol and facilities
- Requirements to determine equipment ratings
- Synchronized data recorders
- Clearer criteria for operationally critical facilities
- Appropriate use of transmission loading relief

Guideline (2) — Consistency within a Reliability Standard

The Commission expects a rational connection between the sub-Requirement Violation Risk Factor assignments and the main Requirement Violation Risk Factor assignment.

Guideline (3) — Consistency among Reliability Standards
The Commission expects the assignment of Violation Risk Factors corresponding to Requirements that address similar reliability goals in different Reliability Standards would be treated comparably.

Guideline (4) — Consistency with NERC's Definition of the Violation Risk Factor Level
Guideline (4) was developed to evaluate whether the assignment of a particular Violation Risk Factor level conforms to NERC's definition of that risk level.

Guideline (5) — Treatment of Requirements that Co-mingle More Than One Obligation
Where a single Requirement co-mingles a higher risk reliability objective and a lesser risk reliability objective, the VRF assignment for such Requirements must not be watered down to reflect the lower risk level associated with the less important objective of the Reliability Standard.

The following discussion addresses how the SDT considered FERC's VRF Guidelines 2 through 5. The team did not address Guideline 1 directly because of an apparent conflict between Guidelines 1 and 4. Whereas Guideline 1 identifies a list of topics that encompass nearly all topics within NERC's Reliability Standards and implies that these requirements should be assigned a "High" VRF, Guideline 4 directs assignment of VRFs based on the impact of a specific requirement to the reliability of the system. The SDT believes that Guideline 4 is reflective of the intent of VRFs in the first instance and therefore concentrated its approach on the reliability impact of the requirements.

PRC-005-2 Protection System Maintenance is a revision of PRC-005-1a Transmission and Generation Protection System Maintenance and Testing with the stated purpose: To document and implement programs for the maintenance of all Protection Systems affecting the reliability of the Bulk Electric System (BES) so that these Protection Systems are kept in working order. PRC-008-0 Implementation and Documentation of Underfrequency Load Shedding Equipment Maintenance Program, PRC-011-0 Undervoltage Load Shedding System Maintenance and Testing and PRC-017-0 Special Protection System Maintenance and Testing are also being replaced by merging them into PRC-005-2 in accordance with suggestions from FERC Order 693. PRC-005-2 also establishes maximum allowable maintenance intervals as directed by FERC in Order 693 in their discussion of the legacy standards PRC-005-1, PRC-008-0, PRC-011-0, and PRC-017-0.

PRC-005-2 has five (5) requirements that incorporate and enhance the intent of the requirements of PRC-005-1a, PRC-008-0, PRC-011-0, and PRC-017-0. Several Tables of minimum maintenance activities and maximum maintenance intervals are also included to addresses FERC's directives from Order 693. The revised standard requires that entities develop an appropriate Protection System Maintenance Program (PSMP), that they implement their PSMP, and that, in the event they are unable to restore Protection System Components to proper working order while performing maintenance, they initiate the follow-up activities necessary to resolve those maintenance issues.

The requirements of PRC-005-2 do not map, one-to-one, with the requirements of the legacy standards, each of which comingle various attributes addressed within the new standard; thus, a requirement-to-requirement comparison of VRFs is irrelevant. When developing VRFs for the

requirements of PRC-005-2, the Standard Drafting Team carefully considered the NERC criteria for developing VRFs, as well as the FERC VRF guidelines. Therefore, PRC-005-2 Requirements R3 and R4 are assigned a VRF of High, while Requirements R1, R2, and R5 are assigned VRFs of Medium.

PRC-005-2 Requirements R1 and R2 are related to developing and documenting a Protection System Maintenance Program. The Standard Drafting Team determined that the assignment of a VRF of Medium was consistent with the NERC criteria that violations of these requirements could directly affect the electrical state or the capability of the bulk electric system, or the ability to effectively monitor and control the bulk electric system but are unlikely to lead to bulk electric system instability, separation, or cascading failures. Additionally, a review of the body of existing NERC Standards with approved VRFs revealed that requirements with similar reliability objectives in other standards are largely assigned a VRF of Medium.

PRC-005-2 Requirements R3 and R4 are related to implementation of the Protection System Maintenance Program. The SDT determined that the assignment of a VRF of High was consistent with the NERC criteria that that violation of these requirements could directly cause or contribute to bulk electric system instability, separation, or a cascading sequence of failures, or could place the bulk electric system at an unacceptable risk of instability, separation, or cascading failures. Additionally, a review of the body of existing NERC Standards with approved VRFs revealed that requirements with similar reliability objectives in other standards are assigned a VRF of High.

PRC-005-2 Requirement R5 relates to the initiation of resolution of unresolved maintenance issues, which describe situations where an entity was unable to restore a Component to proper working order during the performance of the maintenance activity. The Standard Drafting Team determined that the assignment of a VRF of Medium was consistent with the NERC criteria that violation of this requirements could directly affect the electrical state or the capability of the bulk electric system, or the ability to effectively monitor and control the bulk electric system but are unlikely to lead to bulk electric system instability, separation, or cascading failures. Additionally, a review of the body of existing NERC Standards with approved VRFs revealed that requirements with similar reliability objectives in other standards are largely assigned a VRF of Medium.

NERC Criteria - Violation Severity Levels

Violation Severity Levels (VSLs) define the degree to which compliance with a requirement was not achieved. Each requirement must have at least one VSL. While it is preferable to have four VSLs for each requirement, some requirements do not have multiple "degrees" of noncompliant performance and may have only one, two, or three VSLs.

Violation severity levels should be based on the guidelines shown in the table below:

Lower	Moderate	High	Severe
Missing a minor element (or a small percentage) of the required performance The performance or product measured has significant value as it almost meets the full intent of the requirement.	Missing at least one significant element (or a moderate percentage) of the required performance. The performance or product measured still has significant value in meeting the intent of the requirement.	Missing more than one significant element (or is missing a high percentage) of the required performance or is missing a single vital Component. The performance or product has limited value in meeting the intent of the requirement.	Missing most or all of the significant elements (or a significant percentage) of the required performance. The performance measured does not meet the intent of the requirement or the product delivered cannot be used in meeting the intent of the requirement.

FERC Order on Violation Severity Levels

In its June 19, 2008 Order on Violation Severity Levels, FERC indicated it would use the following four guidelines for determining whether to approve VSLs:

Guideline 1: Violation Severity Level Assignments Should Not Have the Unintended Consequence of Lowering the Current Level of Compliance

- Compare the VSLs to any prior Levels of Non-compliance and avoid significant changes that may encourage a lower level of compliance than was required when Levels of Non-compliance were used.

Guideline 2: Violation Severity Level Assignments Should Ensure Uniformity and Consistency in the Determination of Penalties

- Guideline 2a: A violation of a "binary" type requirement must be a "Severe" VSL.
- Guideline 2b: Do not use ambiguous terms such as "minor" and "significant" to describe noncompliant performance.

Guideline 3: Violation Severity Level Assignment Should Be Consistent with the Corresponding Requirement

- VSLs should not expand on what is required in the requirement.

Guideline 4: Violation Severity Level Assignment Should Be Based on A Single Violation, Not on A Cumulative Number of Violations

- . . . unless otherwise stated in the requirement, each instance of non-compliance with a requirement is a separate violation. Section 4 of the Sanction Guidelines states that assessing penalties on a per violation per day basis is the "default" for penalty calculations.

VRF and VSL Justifications

VRF and VSL Justifications – PRC-005-2, R1	
Proposed VRF	**Medium**
NERC VRF Discussion	Failure to establish a Protection System Maintenance Program (PSMP) for Protection Systems designed to provide protection for BES Element(s) could directly affect the electrical state or the capability of the bulk power system. However, violation of this requirement is unlikely to lead to bulk power system instability, separation, or cascading failures. The applicable entities are always responsible for maintaining the reliability of the bulk power system regardless of the situation. This VRF emphasizes the risk to system performance that results from mal-performing Protection System Components. Failure to establish a Protection System Maintenance Program (PSMP) for Protection Systems will not, by itself, lead to instability, separation, or cascading failures. Thus, the requirement meets NERC's criteria for a Medium VRF.
FERC VRF G1 Discussion	Guideline 1- Consistency w/ Blackout Report: N/A
FERC VRF G2 Discussion	Guideline 2- Consistency within a Reliability Standard: The requirement has no sub-requirements so only one VRF was assigned. The requirement utilizes Parts to identify the items to be included within a Protection System Maintenance Program. The VRF for this requirement is consistent with others in the standard with regard to relative risk; therefore, there is no conflict.
FERC VRF G3 Discussion	Guideline 3- Consistency among Reliability Standards: The SDT has determined that there is no consistency among existing approved Standards relative to requirements of this nature. The SDT has assigned a MEDIUM VRF, which is consistent with recent FERC guidance on FAC-008-3 Requirement R2 and FAC-013-2 Requirement R1, which are similar in nature to PRC-005-2 Requirement R1.

VRF and VSL Justifications – PRC-005-2, R1	
Proposed VRF	**Medium**
FERC VRF G4 Discussion	Guideline 4- Consistency with NERC Definitions of VRFs: Failure to establish a Protection System Maintenance Program (PSMP) for Protection Systems designed to provide protection for BES Element(s) could directly affect the electrical state or the capability of the bulk power system. However, violation of this requirement is unlikely to lead to bulk power system instability, separation, or cascading failures. The applicable entities are always responsible for maintaining the reliability of the bulk power system regardless of the situation. This VRF emphasizes the risk to system performance that results from mal-performing Protection System Components. Failure to establish a Protection System Maintenance Program (PSMP) for Protection Systems will not, by itself, lead to instability, separation, or cascading failures. Thus, the requirement meets NERC's criteria for a Medium VRF..
FERC VRF G5 Discussion	Guideline 5- Treatment of Requirements that Co-mingle More than One Obligation: This requirement establishes a single risk-level, and the assigned VRF is consistent with that risk level.

Proposed VSL – PRC-005-2, R1			
Lower	**Moderate**	**High**	**Severe**
The responsible entity's PSMP failed to specify whether one Component Type is being addressed by time-based or performance-based maintenance, or a combination of both. (Part 1.1)	The responsible entity's PSMP failed to specify whether two Component Types are being addressed by time-based or performance-based maintenance, or a combination of both. (Part 1.1)	The responsible entity's PSMP failed to include the applicable monitoring attributes applied to each Protection System Component Type consistent with the maintenance intervals specified in Tables 1-1 through 1-	The responsible entity failed to establish a PSMP. OR The responsible entity failed to specify whether three or more Component Types are being

Proposed VSL – PRC-005-2, R1			
Lower	**Moderate**	**High**	**Severe**
OR The responsible entity's PSMP failed to include applicable station batteries in a time-based program (Part 1.1)		5, Table 2, and Table 3 where monitoring is used to extend the maintenance intervals beyond those specified for unmonitored Protection System Components (Part 1.2).	addressed by time-based or performance-based maintenance, or a combination of both. (Part 1.1).

VRF and VSL Justifications – PRC-005-2, R1	
NERC VSL Guidelines	Meets NERC's VSL Guidelines—There is an incremental aspect to the violation and the VSLs follow the guidelines for incremental violations.
FERC VSL G1 Violation Severity Level Assignments Should Not Have the Unintended Consequence of Lowering the Current Level of Compliance	This VSL is consistent with the current VSLs associated with the existing requirements of the standards being replaced by this proposed standard.
FERC VSL G2 Violation Severity Level Assignments Should Ensure Uniformity and Consistency in the Determination of Penalties Guideline 2a: The Single Violation Severity Level Assignment Category for "Binary" Requirements Is Not Consistent Guideline 2b: Violation Severity Level Assignments that Contain Ambiguous Language	Guideline 2a: N/A Guideline 2b: The proposed VSL does not use any ambiguous terminology, thereby supporting uniformity and consistency in the determination of similar penalties for similar violations.

VRF and VSL Justifications – PRC-005-2, R1	
FERC VSL G3 Violation Severity Level Assignment Should Be Consistent with the Corresponding Requirement	The proposed VSL uses similar terminology to that used in the associated requirement, and is therefore consistent with the requirement.
FERC VSL G4 Violation Severity Level Assignment Should Be Based on A Single Violation, Not on A Cumulative Number of Violations	The VSL is based on a single violation and not cumulative violations.

VRF and VSL Justifications – PRC-005-2, R2	
Proposed VRF	**Medium**
NERC VRF Discussion	Failure to properly establish a performance-based Protection System Maintenance Program (PSMP) for Protection Systems designed to provide protection for BES Element(s) could directly affect the electrical state or the capability of the bulk power system. However, violation of this requirement is unlikely to lead to bulk power system instability, separation, or cascading failures. The applicable entities are always responsible for maintaining the reliability of the bulk power system regardless of the situation. This VRF emphasizes the risk to system performance that results from mal-performing Protection System Components. Failure to properly establish a performance-based Protection System Maintenance Program (PSMP) for Protection Systems will not, by itself, lead to instability, separation, or cascading failures. Thus, the requirement meets NERC's criteria for a Medium VRF.
FERC VRF G1 Discussion	Guideline 1- Consistency w/ Blackout Report: N/A
FERC VRF G2 Discussion	Guideline 2- Consistency within a Reliability Standard: The requirement has no subpart(s); therefore, only one VRF was assigned and no conflict(s) exist.
FERC VRF G3 Discussion	Guideline 3- Consistency among Reliability Standards: The SDT has determined that there is no consistency among existing approved Standards relative to requirements of this nature. The SDT has assigned a MEDIUM VRF, which is consistent with recent FERC guidance on FAC-008-3 Requirement R2 and FAC-013-2 Requirement R1, which are similar in nature to PRC-005-2 Requirement R1.
FERC VRF G4 Discussion	Guideline 4- Consistency with NERC Definitions of VRFs: Failure to properly establish a performance-based Protection System Maintenance Program (PSMP) for .

VRF and VSL Justifications – PRC-005-2, R2	
Proposed VRF	**Medium**
	Protection Systems designed to provide protection for BES Element(s) could directly affect the electrical state or the capability of the bulk power system. However, violation of this requirement is unlikely to lead to bulk power system instability, separation, or cascading failures. The applicable entities are always responsible for maintaining the reliability of the bulk power system regardless of the situation. This VRF emphasizes the risk to system performance that results from mal-performing Protection System Components. Failure to properly establish a performance-based Protection System Maintenance Program (PSMP) for Protection Systems will not, by itself, lead to instability, separation, or cascading failures. Thus, the requirement meets NERC's criteria for a Medium VRF.
FERC VRF G5 Discussion	Guideline 5- Treatment of Requirements that Co-mingle More than One Obligation: This requirement establishes a single risk-level, and the assigned VRF is consistent with that risk level.

Proposed VSL – PRC-005-2, R2			
Lower	**Moderate**	**High**	**Severe**
The responsible entity uses performance-based maintenance intervals in its PSMP but failed to reduce Countable Events to no more than 4% within three years.	N/A	The responsible entity uses performance-based maintenance intervals in its PSMP but failed to reduce Countable Events to no more than 4% within four years.	The responsible entity uses performance-based maintenance intervals in its PSMP but: 1)Failed to establish the technical justification described within Requirement R2 for the initial use of the performance-based PSMP

Proposed VSL – PRC-005-2, R2			
Lower	**Moderate**	**High**	**Severe**
			OR 2) Failed to reduce countable events to no more than 4% within five years OR 3) Maintained a segment with less than 60 Components OR 4) Failed to: • Annually update the list of Components, OR • Annually perform maintenance on the greater of 5% of the segment population or 3 Components, OR • Annually analyze the program activities and results for each segment.

VRF and VSL Justifications – PRC-005-2, R2	
NERC VSL Guidelines	Meets NERC's VSL Guidelines—There is an incremental aspect to the violation and the VSLs follow the guidelines for incremental violations.
FERC VSL G1 Violation Severity Level Assignments Should Not Have the Unintended Consequence of Lowering the Current Level of Compliance	This VSL is consistent with the current VSLs associated with the existing requirements of the standards being replaced by this proposed standard.
FERC VSL G2 Violation Severity Level Assignments Should Ensure Uniformity and Consistency in the Determination of Penalties Guideline 2a: The Single Violation Severity Level Assignment Category for "Binary" Requirements Is Not Consistent	Guideline 2a: N/A Guideline 2b: The proposed VSL does not use any ambiguous terminology, thereby supporting uniformity and consistency in the determination of similar penalties for similar violations.

VRF and VSL Justifications – PRC-005-2, R2	
Guideline 2b: Violation Severity Level Assignments that Contain Ambiguous Language	
FERC VSL G3 Violation Severity Level Assignment Should Be Consistent with the Corresponding Requirement	The proposed VSL uses similar terminology to that used in the associated requirement, and is therefore consistent with the requirement.
FERC VSL G4 Violation Severity Level Assignment Should Be Based on A Single Violation, Not on A Cumulative Number of Violations	The VSL is based on a single violation and not cumulative violations.

VRF and VSL Justifications – PRC-005-2, R3	
Proposed VRF	**High**
NERC VRF Discussion	Failure to implement and follow its Protection System Maintenance Program (PSMP) could, under emergency, abnormal, or restorative conditions anticipated by the preparations, directly cause or contribute to bulk electric system instability, separation, or a cascading sequence of failures, or could place the bulk electric system at an unacceptable risk of instability, separation, or cascading failures, or could hinder restoration to a normal condition. Thus, this requirement meets the criteria for a High VRF.
FERC VRF G1 Discussion	Guideline 1- Consistency w/ Blackout Report: N/A
FERC VRF G2 Discussion	Guideline 2- Consistency within a Reliability Standard: The requirement has no subpart(s); therefore, only one VRF was assigned and no conflict(s) exist.
FERC VRF G3 Discussion	Guideline 3- Consistency among Reliability Standards: The only Reliability Standards with similar goals are those being replaced by this standard, and the High VRF assignment for this requirement is consistent with the assigned VRFs for companion requirements in those existing standards.
FERC VRF G4 Discussion	Guideline 4- Consistency with NERC Definitions of VRFs: Failure to implement and follow its Protection System Maintenance Program (PSMP) could, under emergency, abnormal, or restorative conditions anticipated by the preparations, directly cause or contribute to bulk electric system instability, separation, or a cascading sequence of failures, or could place the bulk electric system at an unacceptable risk of instability, separation, or cascading failures, or could hinder restoration to a normal condition. Thus, this requirement meets the criteria for a High VRF.
FERC VRF G5 Discussion	Guideline 5- Treatment of Requirements that Co-mingle More than One Obligation: This requirement establishes a single risk-level, and the assigned VRF is consistent with that risk level.

Proposed VSL – PRC-005-2, R3			
Lower	**Moderate**	**High**	**Severe**
For Protection System Components included within a time-based maintenance program, the responsible entity failed to maintain 5% or less of the total Components included within a specific Protection System Component Type, in accordance with the minimum maintenance activities and maximum maintenance intervals prescribed within Tables 1-1 through 1-5, Table 2, and Table 3.	For Protection System Components included within a time-based maintenance program, the responsible entity failed to maintain more than 5% but 10% or less of the total Components included within a specific Protection System Component Type, in accordance with the minimum maintenance activities and maximum maintenance intervals prescribed within Tables 1-1 through 1-5, Table 2, and Table 3.	For Protection System Components included within a time-based maintenance program, the responsible entity failed to maintain more than 10% but 15% or less of the total Components included within a specific Protection System Component Type, in accordance with the minimum maintenance activities and maximum maintenance intervals prescribed within Tables 1-1 through 1-5, Table 2, and Table 3.	For Protection System Components included within a time-based maintenance program, the responsible entity failed to maintain more than 15% of the total Components included within a specific Protection System Component Type, in accordance with the minimum maintenance activities and maximum maintenance intervals prescribed within Tables 1-1 through 1-5, Table 2, and Table 3.

VRF and VSL Justificati3ons – PRC-005-2, R3	
NERC VSL Guidelines	Meets NERC's VSL Guidelines—There is an incremental aspect to the violation and the VSLs follow the guidelines for incremental violations.
FERC VSL G1 Violation Severity Level Assignments Should Not Have the Unintended Consequence of Lowering the Current Level of Compliance	This VSL is consistent with the current VSLs associated with the existing requirements of the standards being replaced by this proposed standard.
FERC VSL G2 Violation Severity Level Assignments Should Ensure Uniformity and Consistency in the Determination of Penalties Guideline 2a: The Single Violation Severity Level Assignment Category for "Binary" Requirements Is Not Consistent Guideline 2b: Violation Severity Level Assignments that Contain Ambiguous Language	Guideline 2a: N/A Guideline 2b: The proposed VSL does not use any ambiguous terminology, thereby supporting uniformity and consistency in the determination of similar penalties for similar violations.

VRF and VSL Justifications – PRC-005-2, R3	
FERC VSL G3 Violation Severity Level Assignment Should Be Consistent with the Corresponding Requirement	The proposed VSL uses similar terminology to that used in the associated requirement, and is therefore consistent with the requirement.
FERC VSL G4 Violation Severity Level Assignment Should Be Based on A Single Violation, Not on A Cumulative Number of Violations	The VSL is based on a single violation and not cumulative violations.

VRF and VSL Justifications – PRC-005-2, R4	
Proposed VRF	**High**
NERC VRF Discussion	Failure to implement and follow its Protection System Maintenance Program (PSMP) could, under emergency, abnormal, or restorative conditions anticipated by the preparations, directly cause or contribute to bulk electric system instability, separation, or a cascading sequence of failures, or could place the bulk electric system at an unacceptable risk of instability, separation, or cascading failures, or could hinder restoration to a normal condition. Thus, this requirement meets the criteria for a High VRF.
FERC VRF G1 Discussion	Guideline 1- Consistency w/ Blackout Report: N/A
FERC VRF G2 Discussion	Guideline 2- Consistency within a Reliability Standard: The requirement has no subpart(s); therefore, only one VRF was assigned and no conflict(s) exist.
FERC VRF G3 Discussion	Guideline 3- Consistency among Reliability Standards: The only Reliability Standards with similar goals are those being replaced by this standard, and the High VRF assignment for this requirement is consistent with the assigned VRFs for companion requirements in those existing standards.
FERC VRF G4 Discussion	Guideline 4- Consistency with NERC Definitions of VRFs: Failure to implement and follow its Protection System Maintenance Program (PSMP) could, under emergency, abnormal, or restorative conditions anticipated by the preparations, directly cause or contribute to bulk electric system instability, separation, or a cascading sequence of failures, or could place the bulk electric system at an unacceptable risk of instability, separation, or cascading failures, or could hinder restoration to a normal condition. Thus, this requirement meets the criteria for a High VRF.
FERC VRF G5 Discussion	Guideline 5- Treatment of Requirements that Co-mingle More than One Obligation: This requirement establishes a single risk-level, and the assigned VRF is consistent with that risk level.

Proposed VSL – PRC-005-2, R4			
Lower	**Moderate**	**High**	**Severe**
For Protection System Components included within a performance-based maintenance program, the responsible entity failed to maintain 5% or less of the annual scheduled maintenance for a specific Protection System Component Type in accordance with their performance-based PSMP.	For Protection System Components included within a performance-based maintenance program, the responsible entity failed to maintain more than 5% but 10% or less of the annual scheduled maintenance for a specific Protection System Component Type in accordance with their performance-based PSMP.	For Protection System Components included within a performance-based maintenance program, the responsible entity failed to maintain more than 10% but 15% or less of the annual scheduled maintenance for a specific Protection System Component Type in accordance with their performance-based PSMP.	For Protection System Components included within a performance-based maintenance program, the responsible entity failed to maintain more than 15% of the annual scheduled maintenance for a specific Protection System Component Type in accordance with their performance-based PSMP.

VRF and VSL Justifications – PRC-005-2, R4	
NERC VSL Guidelines	Meets NERC's VSL Guidelines—There is an incremental aspect to the violation and the VSLs follow the guidelines for incremental violations.
FERC VSL G1 Violation Severity Level Assignments Should Not Have the Unintended Consequence of Lowering the Current Level of Compliance	This VSL is consistent with the current VSLs associated with the existing requirements of the standards being replaced by this proposed standard.
FERC VSL G2 Violation Severity Level Assignments Should Ensure Uniformity and Consistency in the Determination of Penalties Guideline 2a: The Single Violation Severity Level Assignment Category for "Binary" Requirements Is Not Consistent Guideline 2b: Violation Severity Level Assignments that Contain Ambiguous Language	Guideline 2a: N/A Guideline 2b: The proposed VSL does not use any ambiguous terminology, thereby supporting uniformity and consistency in the determination of similar penalties for similar violations.

VRF and VSL Justifications – PRC-005-2, R4	
FERC VSL G3 Violation Severity Level Assignment Should Be Consistent with the Corresponding Requirement	The proposed VSL uses similar terminology to that used in the associated requirement, and is therefore consistent with the requirement.
FERC VSL G4 Violation Severity Level Assignment Should Be Based on A Single Violation, Not on A Cumulative Number of Violations	The VSL is based on a single violation and not cumulative violations.

VRF and VSL Justifications – PRC-005-2, R5	
Proposed VRF	**Medium**
NERC VRF Discussion	Failure to initiate resolution of an unresolved maintenance issue for a Protection System Component could directly affect the electrical state or the capability of the bulk power system. However, violation of this requirement is unlikely to lead to bulk power system instability, separation, or cascading failures. The applicable entities are always responsible for maintaining the reliability of the bulk power system regardless of the situation. This VRF emphasizes the risk to system performance that results from mal-performing Protection System Components. Failure to initiate resolution of an unresolved maintenance issue for a Protection System Component will not, by itself, lead to instability, separation, or cascading failures. Thus, the requirement meets NERC's criteria for a Medium VRF.
FERC VRF G1 Discussion	Guideline 1- Consistency w/ Blackout Report: N/A
FERC VRF G2 Discussion	Guideline 2- Consistency within a Reliability Standard: The requirement has no subpart(s); therefore, only one VRF was assigned and no conflict(s) exist.
FERC VRF G3 Discussion	Guideline 3- Consistency among Reliability Standards: The only requirement within approved Standards, PRC-004-2a Requirements R1 and R2 contain a similar requirement and is assigned a HIGH VRF. However, these requirements contain several subparts, and the VRF must address the most egregious risk related to these subparts, and a comparison to these requirements may be irrelevant. PRC-022-1 Requirement R1.5 contains only a similar requirement, and is assigned a MEDIUM VRF. FAC-003-2 Requirement R5 contains only a similar requirement, and is assigned a MEDIUM VRF.
FERC VRF G4 Discussion	Guideline 4- Consistency with NERC Definitions of VRFs: Failure to initiate resolution of an unresolved maintenance issue for a Protection System Component could directly affect the electrical state or the capability of the bulk power system.

VRF and VSL Justifications – PRC-005-2, R5			
Proposed VRF	**Medium**		
	However, violation of this requirement is unlikely to lead to bulk power system instability, separation, or cascading failures. The applicable entities are always responsible for maintaining the reliability of the bulk power system regardless of the situation. This VRF emphasizes the risk to system performance that results from mal-performing Protection System Components. Failure to initiate resolution of an unresolved maintenance issue for a Protection System Component will not, by itself, lead to instability, separation, or cascading failures. Thus, the requirement meets NERC's criteria for a Medium VRF.		
FERC VRF G5 Discussion	Guideline 5- Treatment of Requirements that Co-mingle More than One Obligation: This requirement establishes a single risk-level, and the assigned VRF is consistent with that risk level.		
Proposed VSL – PRC-005-2, R5			
Lower	**Moderate**	**High**	**Severe**
The responsible entity failed to undertake efforts to correct 5 or fewer identified Unresolved Maintenance Issues.	The responsible entity failed to undertake efforts to correct greater than 5, but less than or equal to 10 identified Unresolved Maintenance Issues.	The responsible entity failed to undertake efforts to correct greater than 10, but less than or equal to 15 identified Unresolved Maintenance Issues.	The responsible entity failed to undertake efforts to correct greater than 15 identified Unresolved Maintenance Issues.

VRF and VSL Justifications – PRC-005-2, R5	
NERC VSL Guidelines	Meets NERC's VSL Guidelines—There is an incremental aspect to the violation and the VSLs follow the guidelines for incremental violations.
FERC VSL G1 Violation Severity Level Assignments Should Not Have the Unintended Consequence of Lowering the Current Level of Compliance	This is a new Requirement; consequently, there is no prior level of compliance.
FERC VSL G2 Violation Severity Level Assignments Should Ensure Uniformity and Consistency in the Determination of Penalties Guideline 2a: The Single Violation Severity Level Assignment Category for "Binary" Requirements Is Not Consistent Guideline 2b: Violation Severity Level Assignments that Contain Ambiguous Language	Guideline 2a: N/A Guideline 2b: The proposed VSL does not use any ambiguous terminology, thereby supporting uniformity and consistency in the determination of similar penalties for similar violations.

VRF and VSL Justifications – PRC-005-2, R5	
FERC VSL G3 Violation Severity Level Assignment Should Be Consistent with the Corresponding Requirement	The proposed VSL uses similar terminology to that used in the associated requirement, and is therefore consistent with the requirement.
FERC VSL G4 Violation Severity Level Assignment Should Be Based on A Single Violation, Not on A Cumulative Number of Violations	The VSL is based on a single violation and not cumulative violations.

Project 2007-17 – PRC-005-2 Protection System Maintenance

This document provides the drafting team's justification for assignment of violation risk factors (VRFs) and violation severity levels (VSLs) for each requirement in PRC-005-2 — Protection System Maintenance.

Each primary requirement is assigned a VRF and a set of one or more VSLs. These elements support the determination of an initial value range for the Base Penalty Amount regarding violations of requirements in FERC-approved Reliability Standards, as defined in the ERO Sanction Guidelines.

The Protection System Maintenance and Testing Standard Drafting Team applied the following NERC criteria and FERC Guidelines when proposing VRFs and VSLs for the requirements under this project:

NERC Criteria - Violation Risk Factors

High Risk Requirement
A requirement that, if violated, could directly cause or contribute to bulk electric system instability, separation, or a cascading sequence of failures, or could place the bulk electric system at an unacceptable risk of instability, separation, or cascading failures; or, a requirement in a planning time frame that, if violated, could, under emergency, abnormal, or restorative conditions anticipated by the preparations, directly cause or contribute to bulk electric system instability, separation, or a cascading sequence of failures, or could place the bulk electric system at an unacceptable risk of instability, separation, or cascading failures, or could hinder restoration to a normal condition.

Medium Risk Requirement
A requirement that, if violated, could directly affect the electrical state or the capability of the bulk electric system, or the ability to effectively monitor and control the bulk electric system. However, violation of a medium risk requirement is unlikely to lead to bulk electric system instability, separation, or cascading failures; or, a requirement in a planning time frame that, if violated, could, under emergency, abnormal, or restorative conditions anticipated by the preparations, directly and adversely affect the electrical state or capability of the bulk electric system, or the ability to effectively monitor, control, or restore the bulk electric system. However, violation of a medium risk requirement is unlikely, under emergency, abnormal, or restoration conditions anticipated by the preparations, to lead to bulk electric system instability, separation, or cascading failures, nor to hinder restoration to a normal condition.

Lower Risk Requirement
A requirement that is administrative in nature and a requirement that, if violated, would not be expected to adversely affect the electrical state or capability of the bulk electric system, or the ability to effectively monitor and control the bulk electric system; or, a requirement that is administrative in nature and a requirement in a planning time frame that, if violated, would not, under the emergency, abnormal, or restorative conditions anticipated by the preparations, be expected to adversely affect the electrical state or capability of the bulk electric system, or the ability to effectively monitor, control, or restore the bulk electric system. A planning requirement that is administrative in nature.

FERC Violation Risk Factor Guidelines

Guideline (1) — Consistency with the Conclusions of the Final Blackout Report

The Commission seeks to ensure that Violation Risk Factors assigned to Requirements of Reliability Standards in these identified areas appropriately reflect their historical critical impact on the reliability of the Bulk-Power System.
In the VSL Order, FERC listed critical areas (from the Final Blackout Report) where violations could severely affect the reliability of the Bulk-Power System:

- Emergency operations
- Vegetation management
- Operator personnel training
- Protection systems and their coordination
- Operating tools and backup facilities
- Reactive power and voltage control
- System modeling and data exchange
- Communication protocol and facilities
- Requirements to determine equipment ratings
- Synchronized data recorders
- Clearer criteria for operationally critical facilities
- Appropriate use of transmission loading relief

Guideline (2) — Consistency within a Reliability Standard

The Commission expects a rational connection between the sub-Requirement Violation Risk Factor assignments and the main Requirement Violation Risk Factor assignment.

Guideline (3) — Consistency among Reliability Standards
The Commission expects the assignment of Violation Risk Factors corresponding to Requirements that address similar reliability goals in different Reliability Standards would be treated comparably.

Guideline (4) — Consistency with NERC's Definition of the Violation Risk Factor Level
Guideline (4) was developed to evaluate whether the assignment of a particular Violation Risk Factor level conforms to NERC's definition of that risk level.

Guideline (5) — Treatment of Requirements that Co-mingle More Than One Obligation
Where a single Requirement co-mingles a higher risk reliability objective and a lesser risk reliability objective, the VRF assignment for such Requirements must not be watered down to reflect the lower risk level associated with the less important objective of the Reliability Standard.

The following discussion addresses how the SDT considered FERC's VRF Guidelines 2 through 5. The team did not address Guideline 1 directly because of an apparent conflict between Guidelines 1 and 4. Whereas Guideline 1 identifies a list of topics that encompass nearly all topics within NERC's Reliability Standards and implies that these requirements should be assigned a "High" VRF, Guideline 4 directs assignment of VRFs based on the impact of a specific requirement to the reliability of the system. The SDT believes that Guideline 4 is reflective of the intent of VRFs in the first instance and therefore concentrated its approach on the reliability impact of the requirements.

PRC-005-2 Protection System Maintenance is a revision of PRC-005-1a Transmission and Generation Protection System Maintenance and Testing with the stated purpose: To document and implement programs for the maintenance of all Protection Systems affecting the reliability of the Bulk Electric System (BES) so that these Protection Systems are kept in working order. PRC-008-0 Implementation and Documentation of Underfrequency Load Shedding Equipment Maintenance Program, PRC-011-0 Undervoltage Load Shedding System Maintenance and Testing and PRC-017-0 Special Protection System Maintenance and Testing are also being replaced by merging them into PRC-005-2 in accordance with suggestions from FERC Order 693. PRC-005-2 also establishes maximum allowable maintenance intervals as directed by FERC in Order 693 in their discussion of the legacy standards PRC-005-1, PRC-008-0, PRC-011-0, and PRC-017-0.

PRC-005-2 has five (5) requirements that incorporate and enhance the intent of the requirements of PRC-005-1a, PRC-008-0, PRC-011-0, and PRC-017-0. Several Tables of minimum maintenance activities and maximum maintenance intervals are also included to addresses FERC's directives from Order 693. The revised standard requires that entities develop an appropriate Protection System Maintenance Program (PSMP), that they implement their PSMP, and that, in the event they are unable to restore Protection System Components to proper working order while performing maintenance, they initiate the follow-up activities necessary to resolve those maintenance issues.

The requirements of PRC-005-2 do not map, one-to-one, with the requirements of the legacy standards, each of which comingle various attributes addressed within the new standard; thus, a requirement-to-requirement comparison of VRFs is irrelevant. When developing VRFs for the

requirements of PRC-005-2, the Standard Drafting Team carefully considered the NERC criteria for developing VRFs, as well as the FERC VRF guidelines. Therefore, PRC-005-2 Requirements R3 and R4 are assigned a VRF of High, while Requirements R1, R2, and R5 are assigned VRFs of Medium.

PRC-005-2 Requirements R1 and R2 are related to developing and documenting a Protection System Maintenance Program. The Standard Drafting Team determined that the assignment of a VRF of Medium was consistent with the NERC criteria that violations of these requirements could directly affect the electrical state or the capability of the bulk electric system, or the ability to effectively monitor and control the bulk electric system but are unlikely to lead to bulk electric system instability, separation, or cascading failures. Additionally, a review of the body of existing NERC Standards with approved VRFs revealed that requirements with similar reliability objectives in other standards are largely assigned a VRF of Medium.

PRC-005-2 Requirements R3 and R4 are related to implementation of the Protection System Maintenance Program. The SDT determined that the assignment of a VRF of High was consistent with the NERC criteria that that violation of these requirements could directly cause or contribute to bulk electric system instability, separation, or a cascading sequence of failures, or could place the bulk electric system at an unacceptable risk of instability, separation, or cascading failures. Additionally, a review of the body of existing NERC Standards with approved VRFs revealed that requirements with similar reliability objectives in other standards are assigned a VRF of High.

PRC-005-2 Requirement R5 relates to the initiation of resolution of unresolved maintenance issues, which describe situations where an entity was unable to restore a Component to proper working order during the performance of the maintenance activity. The Standard Drafting Team determined that the assignment of a VRF of Medium was consistent with the NERC criteria that violation of this requirements could directly affect the electrical state or the capability of the bulk electric system, or the ability to effectively monitor and control the bulk electric system but are unlikely to lead to bulk electric system instability, separation, or cascading failures. Additionally, a review of the body of existing NERC Standards with approved VRFs revealed that requirements with similar reliability objectives in other standards are largely assigned a VRF of Medium.

NERC Criteria - Violation Severity Levels

Violation Severity Levels (VSLs) define the degree to which compliance with a requirement was not achieved. Each requirement must have at least one VSL. While it is preferable to have four VSLs for each requirement, some requirements do not have multiple "degrees" of noncompliant performance and may have only one, two, or three VSLs.

Violation severity levels should be based on the guidelines shown in the table below:

Lower	Moderate	High	Severe
Missing a minor element (or a small percentage) of the required performance The performance or product measured has significant value as it almost meets the full intent of the requirement.	Missing at least one significant element (or a moderate percentage) of the required performance. The performance or product measured still has significant value in meeting the intent of the requirement.	Missing more than one significant element (or is missing a high percentage) of the required performance or is missing a single vital Component. The performance or product has limited value in meeting the intent of the requirement.	Missing most or all of the significant elements (or a significant percentage) of the required performance. The performance measured does not meet the intent of the requirement or the product delivered cannot be used in meeting the intent of the requirement.

FERC Order on Violation Severity Levels

In its June 19, 2008 Order on Violation Severity Levels, FERC indicated it would use the following four guidelines for determining whether to approve VSLs:

Guideline 1: Violation Severity Level Assignments Should Not Have the Unintended Consequence of Lowering the Current Level of Compliance

- Compare the VSLs to any prior Levels of Non-compliance and avoid significant changes that may encourage a lower level of compliance than was required when Levels of Non-compliance were used.

Guideline 2: Violation Severity Level Assignments Should Ensure Uniformity and Consistency in the Determination of Penalties

- Guideline 2a: A violation of a "binary" type requirement must be a "Severe" VSL.
- Guideline 2b: Do not use ambiguous terms such as "minor" and "significant" to describe noncompliant performance.

Guideline 3: Violation Severity Level Assignment Should Be Consistent with the Corresponding Requirement

- VSLs should not expand on what is required in the requirement.

Guideline 4: Violation Severity Level Assignment Should Be Based on A Single Violation, Not on A Cumulative Number of Violations

- . . . unless otherwise stated in the requirement, each instance of non-compliance with a requirement is a separate violation. Section 4 of the Sanction Guidelines states that assessing penalties on a per violation per day basis is the "default" for penalty calculations.

VRF and VSL Justifications

VRF and VSL Justifications – PRC-005-2, R1	
Proposed VRF	**Medium**
NERC VRF Discussion	Failure to establish a Protection System Maintenance Program (PSMP) for Protection Systems designed to provide protection for BES Element(s) could directly affect the electrical state or the capability of the bulk power system. However, violation of this requirement is unlikely to lead to bulk power system instability, separation, or cascading failures. The applicable entities are always responsible for maintaining the reliability of the bulk power system regardless of the situation. This VRF emphasizes the risk to system performance that results from mal-performing Protection System Components. Failure to establish a Protection System Maintenance Program (PSMP) for Protection Systems will not, by itself, lead to instability, separation, or cascading failures. Thus, the requirement meets NERC's criteria for a Medium VRF.
FERC VRF G1 Discussion	Guideline 1- Consistency w/ Blackout Report: N/A
FERC VRF G2 Discussion	Guideline 2- Consistency within a Reliability Standard: The requirement has no sub-requirements so only one VRF was assigned. The requirement utilizes Parts to identify the items to be included within a Protection System Maintenance Program. The VRF for this requirement is consistent with others in the standard with regard to relative risk; therefore, there is no conflict.
FERC VRF G3 Discussion	Guideline 3- Consistency among Reliability Standards: The SDT has determined that there is no consistency among existing approved Standards relative to requirements of this nature. The SDT has assigned a MEDIUM VRF, which is consistent with recent FERC guidance on FAC-008-3 Requirement R2 and FAC-013-2 Requirement R1, which are similar in nature to PRC-005-2 Requirement R1.

VRF and VSL Justifications – PRC-005-2, R1	
Proposed VRF	**Medium**
FERC VRF G4 Discussion	Guideline 4- Consistency with NERC Definitions of VRFs: Failure to establish a Protection System Maintenance Program (PSMP) for Protection Systems designed to provide protection for BES Element(s) could directly affect the electrical state or the capability of the bulk power system. However, violation of this requirement is unlikely to lead to bulk power system instability, separation, or cascading failures. The applicable entities are always responsible for maintaining the reliability of the bulk power system regardless of the situation. This VRF emphasizes the risk to system performance that results from mal-performing Protection System Components. Failure to establish a Protection System Maintenance Program (PSMP) for Protection Systems will not, by itself, lead to instability, separation, or cascading failures. Thus, the requirement meets NERC's criteria for a Medium VRF..
FERC VRF G5 Discussion	Guideline 5- Treatment of Requirements that Co-mingle More than One Obligation: This requirement establishes a single risk-level, and the assigned VRF is consistent with that risk level.

Proposed VSL – PRC-005-2, R1			
Lower	**Moderate**	**High**	**Severe**
The responsible entity's PSMP failed to specify whether one Component Type is being addressed by time-based or performance-based maintenance, or a combination of both. (Part 1.1)	The responsible entity's PSMP failed to specify whether two Component Types are being addressed by time-based or performance-based maintenance, or a combination of both. (Part 1.1)	The responsible entity's PSMP failed to include the applicable monitoring attributes applied to each Protection System Component Type consistent with the maintenance intervals specified in Tables 1-1 through 1-	The responsible entity failed to establish a PSMP. OR The responsible entity failed to specify whether three or more Component Types are being

Proposed VSL – PRC-005-2, R1			
Lower	**Moderate**	**High**	**Severe**
OR The responsible entity's PSMP failed to include applicable station batteries in a time-based program (Part 1.1)		5, Table 2, and Table 3 where monitoring is used to extend the maintenance intervals beyond those specified for unmonitored Protection System Components (Part 1.2).	addressed by time-based or performance-based maintenance, or a combination of both. (Part 1.1).

VRF and VSL Justifications – PRC-005-2, R1	
NERC VSL Guidelines	Meets NERC's VSL Guidelines—There is an incremental aspect to the violation and the VSLs follow the guidelines for incremental violations.
FERC VSL G1 Violation Severity Level Assignments Should Not Have the Unintended Consequence of Lowering the Current Level of Compliance	This VSL is consistent with the current VSLs associated with the existing requirements of the standards being replaced by this proposed standard.
FERC VSL G2 Violation Severity Level Assignments Should Ensure Uniformity and Consistency in the Determination of Penalties Guideline 2a: The Single Violation Severity Level Assignment Category for "Binary" Requirements Is Not Consistent Guideline 2b: Violation Severity Level Assignments that Contain Ambiguous Language	Guideline 2a: N/A Guideline 2b: The proposed VSL does not use any ambiguous terminology, thereby supporting uniformity and consistency in the determination of similar penalties for similar violations.

VRF and VSL Justifications – PRC-005-2, R1	
FERC VSL G3 Violation Severity Level Assignment Should Be Consistent with the Corresponding Requirement	The proposed VSL uses similar terminology to that used in the associated requirement, and is therefore consistent with the requirement.
FERC VSL G4 Violation Severity Level Assignment Should Be Based on A Single Violation, Not on A Cumulative Number of Violations	The VSL is based on a single violation and not cumulative violations.

VRF and VSL Justifications – PRC-005-2, R2	
Proposed VRF	**Medium**
NERC VRF Discussion	Failure to properly establish a performance-based Protection System Maintenance Program (PSMP) for Protection Systems designed to provide protection for BES Element(s) could directly affect the electrical state or the capability of the bulk power system. However, violation of this requirement is unlikely to lead to bulk power system instability, separation, or cascading failures. The applicable entities are always responsible for maintaining the reliability of the bulk power system regardless of the situation. This VRF emphasizes the risk to system performance that results from mal-performing Protection System Components. Failure to properly establish a performance-based Protection System Maintenance Program (PSMP) for Protection Systems will not, by itself, lead to instability, separation, or cascading failures. Thus, the requirement meets NERC's criteria for a Medium VRF.
FERC VRF G1 Discussion	Guideline 1- Consistency w/ Blackout Report: N/A
FERC VRF G2 Discussion	Guideline 2- Consistency within a Reliability Standard: The requirement has no subpart(s); therefore, only one VRF was assigned and no conflict(s) exist.
FERC VRF G3 Discussion	Guideline 3- Consistency among Reliability Standards: The SDT has determined that there is no consistency among existing approved Standards relative to requirements of this nature. The SDT has assigned a MEDIUM VRF, which is consistent with recent FERC guidance on FAC-008-3 Requirement R2 and FAC-013-2 Requirement R1, which are similar in nature to PRC-005-2 Requirement R1.
FERC VRF G4 Discussion	Guideline 4- Consistency with NERC Definitions of VRFs: Failure to properly establish a performance-based Protection System Maintenance Program (PSMP) for .

VRF and VSL Justifications – PRC-005-2, R2	
Proposed VRF	**Medium**
	Protection Systems designed to provide protection for BES Element(s) could directly affect the electrical state or the capability of the bulk power system. However, violation of this requirement is unlikely to lead to bulk power system instability, separation, or cascading failures. The applicable entities are always responsible for maintaining the reliability of the bulk power system regardless of the situation. This VRF emphasizes the risk to system performance that results from mal-performing Protection System Components. Failure to properly establish a performance-based Protection System Maintenance Program (PSMP) for Protection Systems will not, by itself, lead to instability, separation, or cascading failures. Thus, the requirement meets NERC's criteria for a Medium VRF.
FERC VRF G5 Discussion	Guideline 5- Treatment of Requirements that Co-mingle More than One Obligation: This requirement establishes a single risk-level, and the assigned VRF is consistent with that risk level.

Proposed VSL – PRC-005-2, R2			
Lower	**Moderate**	**High**	**Severe**
The responsible entity uses performance-based maintenance intervals in its PSMP but failed to reduce Countable Events to no more than 4% within three years.	N/A	The responsible entity uses performance-based maintenance intervals in its PSMP but failed to reduce Countable Events to no more than 4% within four years.	The responsible entity uses performance-based maintenance intervals in its PSMP but: 1)Failed to establish the technical justification described within Requirement R2 for the initial use of the performance-based PSMP

Proposed VSL – PRC-005-2, R2			
Lower	**Moderate**	**High**	**Severe**
			OR 2) Failed to reduce countable events to no more than 4% within five years OR 3) Maintained a segment with less than 60 Components OR 4) Failed to: • Annually update the list of Components, OR • Annually perform maintenance on the greater of 5% of the segment population or 3 Components, OR • Annually analyze the program activities and results for each segment.

VRF and VSL Justifications – PRC-005-2, R2	
NERC VSL Guidelines	Meets NERC's VSL Guidelines—There is an incremental aspect to the violation and the VSLs follow the guidelines for incremental violations.
FERC VSL G1 Violation Severity Level Assignments Should Not Have the Unintended Consequence of Lowering the Current Level of Compliance	This VSL is consistent with the current VSLs associated with the existing requirements of the standards being replaced by this proposed standard.
FERC VSL G2 Violation Severity Level Assignments Should Ensure Uniformity and Consistency in the Determination of Penalties Guideline 2a: The Single Violation Severity Level Assignment Category for "Binary" Requirements Is Not Consistent	Guideline 2a: N/A Guideline 2b: The proposed VSL does not use any ambiguous terminology, thereby supporting uniformity and consistency in the determination of similar penalties for similar violations.

VRF and VSL Justifications – PRC-005-2, R2	
Guideline 2b: Violation Severity Level Assignments that Contain Ambiguous Language	
FERC VSL G3 Violation Severity Level Assignment Should Be Consistent with the Corresponding Requirement	The proposed VSL uses similar terminology to that used in the associated requirement, and is therefore consistent with the requirement.
FERC VSL G4 Violation Severity Level Assignment Should Be Based on A Single Violation, Not on A Cumulative Number of Violations	The VSL is based on a single violation and not cumulative violations.

VRF and VSL Justifications – PRC-005-2, R3	
Proposed VRF	**High**
NERC VRF Discussion	Failure to implement and follow its Protection System Maintenance Program (PSMP) could, under emergency, abnormal, or restorative conditions anticipated by the preparations, directly cause or contribute to bulk electric system instability, separation, or a cascading sequence of failures, or could place the bulk electric system at an unacceptable risk of instability, separation, or cascading failures, or could hinder restoration to a normal condition. Thus, this requirement meets the criteria for a High VRF.
FERC VRF G1 Discussion	Guideline 1- Consistency w/ Blackout Report: N/A
FERC VRF G2 Discussion	Guideline 2- Consistency within a Reliability Standard: The requirement has no subpart(s); therefore, only one VRF was assigned and no conflict(s) exist.
FERC VRF G3 Discussion	Guideline 3- Consistency among Reliability Standards: The only Reliability Standards with similar goals are those being replaced by this standard, and the High VRF assignment for this requirement is consistent with the assigned VRFs for companion requirements in those existing standards.
FERC VRF G4 Discussion	Guideline 4- Consistency with NERC Definitions of VRFs: Failure to implement and follow its Protection System Maintenance Program (PSMP) could, under emergency, abnormal, or restorative conditions anticipated by the preparations, directly cause or contribute to bulk electric system instability, separation, or a cascading sequence of failures, or could place the bulk electric system at an unacceptable risk of instability, separation, or cascading failures, or could hinder restoration to a normal condition. Thus, this requirement meets the criteria for a High VRF.
FERC VRF G5 Discussion	Guideline 5- Treatment of Requirements that Co-mingle More than One Obligation: This requirement establishes a single risk-level, and the assigned VRF is consistent with that risk level.

Proposed VSL – PRC-005-2, R3			
Lower	**Moderate**	**High**	**Severe**
For Protection System Components included within a time-based maintenance program, the responsible entity failed to maintain 5% or less of the total Components included within a specific Protection System Component Type, in accordance with the minimum maintenance activities and maximum maintenance intervals prescribed within Tables 1-1 through 1-5, Table 2, and Table 3.	For Protection System Components included within a time-based maintenance program, the responsible entity failed to maintain more than 5% but 10% or less of the total Components included within a specific Protection System Component Type, in accordance with the minimum maintenance activities and maximum maintenance intervals prescribed within Tables 1-1 through 1-5, Table 2, and Table 3.	For Protection System Components included within a time-based maintenance program, the responsible entity failed to maintain more than 10% but 15% or less of the total Components included within a specific Protection System Component Type, in accordance with the minimum maintenance activities and maximum maintenance intervals prescribed within Tables 1-1 through 1-5, Table 2, and Table 3.	For Protection System Components included within a time-based maintenance program, the responsible entity failed to maintain more than 15% of the total Components included within a specific Protection System Component Type, in accordance with the minimum maintenance activities and maximum maintenance intervals prescribed within Tables 1-1 through 1-5, Table 2, and Table 3.

VRF and VSL Justificati3ons – PRC-005-2, R3	
NERC VSL Guidelines	Meets NERC's VSL Guidelines—There is an incremental aspect to the violation and the VSLs follow the guidelines for incremental violations.
FERC VSL G1 Violation Severity Level Assignments Should Not Have the Unintended Consequence of Lowering the Current Level of Compliance	This VSL is consistent with the current VSLs associated with the existing requirements of the standards being replaced by this proposed standard.
FERC VSL G2 Violation Severity Level Assignments Should Ensure Uniformity and Consistency in the Determination of Penalties Guideline 2a: The Single Violation Severity Level Assignment Category for "Binary" Requirements Is Not Consistent Guideline 2b: Violation Severity Level Assignments that Contain Ambiguous Language	Guideline 2a: N/A Guideline 2b: The proposed VSL does not use any ambiguous terminology, thereby supporting uniformity and consistency in the determination of similar penalties for similar violations.

VRF and VSL Justifications – PRC-005-2, R3	
FERC VSL G3 Violation Severity Level Assignment Should Be Consistent with the Corresponding Requirement	The proposed VSL uses similar terminology to that used in the associated requirement, and is therefore consistent with the requirement.
FERC VSL G4 Violation Severity Level Assignment Should Be Based on A Single Violation, Not on A Cumulative Number of Violations	The VSL is based on a single violation and not cumulative violations.

VRF and VSL Justifications – PRC-005-2, R4	
Proposed VRF	**High**
NERC VRF Discussion	Failure to implement and follow its Protection System Maintenance Program (PSMP) could, under emergency, abnormal, or restorative conditions anticipated by the preparations, directly cause or contribute to bulk electric system instability, separation, or a cascading sequence of failures, or could place the bulk electric system at an unacceptable risk of instability, separation, or cascading failures, or could hinder restoration to a normal condition. Thus, this requirement meets the criteria for a High VRF.
FERC VRF G1 Discussion	Guideline 1- Consistency w/ Blackout Report: N/A
FERC VRF G2 Discussion	Guideline 2- Consistency within a Reliability Standard: The requirement has no subpart(s); therefore, only one VRF was assigned and no conflict(s) exist.
FERC VRF G3 Discussion	Guideline 3- Consistency among Reliability Standards: The only Reliability Standards with similar goals are those being replaced by this standard, and the High VRF assignment for this requirement is consistent with the assigned VRFs for companion requirements in those existing standards.
FERC VRF G4 Discussion	Guideline 4- Consistency with NERC Definitions of VRFs: Failure to implement and follow its Protection System Maintenance Program (PSMP) could, under emergency, abnormal, or restorative conditions anticipated by the preparations, directly cause or contribute to bulk electric system instability, separation, or a cascading sequence of failures, or could place the bulk electric system at an unacceptable risk of instability, separation, or cascading failures, or could hinder restoration to a normal condition. Thus, this requirement meets the criteria for a High VRF.
FERC VRF G5 Discussion	Guideline 5- Treatment of Requirements that Co-mingle More than One Obligation: This requirement establishes a single risk-level, and the assigned VRF is consistent with that risk level.

Proposed VSL – PRC-005-2, R4			
Lower	**Moderate**	**High**	**Severe**
For Protection System Components included within a performance-based maintenance program, the responsible entity failed to maintain 5% or less of the annual scheduled maintenance for a specific Protection System Component Type in accordance with their performance-based PSMP.	For Protection System Components included within a performance-based maintenance program, the responsible entity failed to maintain more than 5% but 10% or less of the annual scheduled maintenance for a specific Protection System Component Type in accordance with their performance-based PSMP.	For Protection System Components included within a performance-based maintenance program, the responsible entity failed to maintain more than 10% but 15% or less of the annual scheduled maintenance for a specific Protection System Component Type in accordance with their performance-based PSMP.	For Protection System Components included within a performance-based maintenance program, the responsible entity failed to maintain more than 15% of the annual scheduled maintenance for a specific Protection System Component Type in accordance with their performance-based PSMP.

VRF and VSL Justifications – PRC-005-2, R4	
NERC VSL Guidelines	Meets NERC's VSL Guidelines—There is an incremental aspect to the violation and the VSLs follow the guidelines for incremental violations.
FERC VSL G1 Violation Severity Level Assignments Should Not Have the Unintended Consequence of Lowering the Current Level of Compliance	This VSL is consistent with the current VSLs associated with the existing requirements of the standards being replaced by this proposed standard.
FERC VSL G2 Violation Severity Level Assignments Should Ensure Uniformity and Consistency in the Determination of Penalties Guideline 2a: The Single Violation Severity Level Assignment Category for "Binary" Requirements Is Not Consistent Guideline 2b: Violation Severity Level Assignments that Contain Ambiguous Language	Guideline 2a: N/A Guideline 2b: The proposed VSL does not use any ambiguous terminology, thereby supporting uniformity and consistency in the determination of similar penalties for similar violations.

VRF and VSL Justifications – PRC-005-2, R4	
FERC VSL G3 Violation Severity Level Assignment Should Be Consistent with the Corresponding Requirement	The proposed VSL uses similar terminology to that used in the associated requirement, and is therefore consistent with the requirement.
FERC VSL G4 Violation Severity Level Assignment Should Be Based on A Single Violation, Not on A Cumulative Number of Violations	The VSL is based on a single violation and not cumulative violations.

VRF and VSL Justifications – PRC-005-2, R5	
Proposed VRF	**Medium**
NERC VRF Discussion	Failure to initiate resolution of an unresolved maintenance issue for a Protection System Component could directly affect the electrical state or the capability of the bulk power system. However, violation of this requirement is unlikely to lead to bulk power system instability, separation, or cascading failures. The applicable entities are always responsible for maintaining the reliability of the bulk power system regardless of the situation. This VRF emphasizes the risk to system performance that results from mal-performing Protection System Components. Failure to initiate resolution of an unresolved maintenance issue for a Protection System Component will not, by itself, lead to instability, separation, or cascading failures. Thus, the requirement meets NERC's criteria for a Medium VRF.
FERC VRF G1 Discussion	Guideline 1- Consistency w/ Blackout Report: N/A
FERC VRF G2 Discussion	Guideline 2- Consistency within a Reliability Standard: The requirement has no subpart(s); therefore, only one VRF was assigned and no conflict(s) exist.
FERC VRF G3 Discussion	Guideline 3- Consistency among Reliability Standards: The only requirement within approved Standards, PRC-004-2a Requirements R1 and R2 contain a similar requirement and is assigned a HIGH VRF. However, these requirements contain several subparts, and the VRF must address the most egregious risk related to these subparts, and a comparison to these requirements may be irrelevant. PRC-022-1 Requirement R1.5 contains only a similar requirement, and is assigned a MEDIUM VRF. FAC-003-2 Requirement R5 contains only a similar requirement, and is assigned a MEDIUM VRF.
FERC VRF G4 Discussion	Guideline 4- Consistency with NERC Definitions of VRFs: Failure to initiate resolution of an unresolved maintenance issue for a Protection System Component could directly affect the electrical state or the capability of the bulk power system.

VRF and VSL Justifications – PRC-005-2, R5			
Proposed VRF	**Medium**		
	However, violation of this requirement is unlikely to lead to bulk power system instability, separation, or cascading failures. The applicable entities are always responsible for maintaining the reliability of the bulk power system regardless of the situation. This VRF emphasizes the risk to system performance that results from mal-performing Protection System Components. Failure to initiate resolution of an unresolved maintenance issue for a Protection System Component will not, by itself, lead to instability, separation, or cascading failures. Thus, the requirement meets NERC's criteria for a Medium VRF.		
FERC VRF G5 Discussion	Guideline 5- Treatment of Requirements that Co-mingle More than One Obligation: This requirement establishes a single risk-level, and the assigned VRF is consistent with that risk level.		
Proposed VSL – PRC-005-2, R5			
Lower	**Moderate**	**High**	**Severe**
The responsible entity failed to undertake efforts to correct 5 or fewer identified Unresolved Maintenance Issues.	The responsible entity failed to undertake efforts to correct greater than 5, but less than or equal to 10 identified Unresolved Maintenance Issues.	The responsible entity failed to undertake efforts to correct greater than 10, but less than or equal to 15 identified Unresolved Maintenance Issues.	The responsible entity failed to undertake efforts to correct greater than 15 identified Unresolved Maintenance Issues.

VRF and VSL Justifications – PRC-005-2, R5	
NERC VSL Guidelines	Meets NERC's VSL Guidelines—There is an incremental aspect to the violation and the VSLs follow the guidelines for incremental violations.
FERC VSL G1 Violation Severity Level Assignments Should Not Have the Unintended Consequence of Lowering the Current Level of Compliance	This is a new Requirement; consequently, there is no prior level of compliance.
FERC VSL G2 Violation Severity Level Assignments Should Ensure Uniformity and Consistency in the Determination of Penalties Guideline 2a: The Single Violation Severity Level Assignment Category for "Binary" Requirements Is Not Consistent Guideline 2b: Violation Severity Level Assignments that Contain Ambiguous Language	Guideline 2a: N/A Guideline 2b: The proposed VSL does not use any ambiguous terminology, thereby supporting uniformity and consistency in the determination of similar penalties for similar violations.

VRF and VSL Justifications – PRC-005-2, R5	
FERC VSL G3 Violation Severity Level Assignment Should Be Consistent with the Corresponding Requirement	The proposed VSL uses similar terminology to that used in the associated requirement, and is therefore consistent with the requirement.
FERC VSL G4 Violation Severity Level Assignment Should Be Based on A Single Violation, Not on A Cumulative Number of Violations	The VSL is based on a single violation and not cumulative violations.

A. Introduction

1. Title: **Transmission and Generation Protection System Maintenance and Testing**

2. Number: PRC-005-1.1b

3. Purpose: To ensure all transmission and generation Protection Systems affecting the reliability of the Bulk Electric System (BES) are maintained and tested.

4. Applicability

4.1. Transmission Owner.

4.2. Generator Owner.

4.3. Distribution Provider that owns a transmission Protection System.

5. Effective Date: In those jurisdictions where regulatory approval is required, all requirements become effective upon approval. In those jurisdictions where no regulatory approval is required, all requirements become effective upon Board of Trustee's adoption or as otherwise made effective pursuant to the laws applicable to such ERO governmental authorities.

B. Requirements

R1. Each Transmission Owner and any Distribution Provider that owns a transmission Protection System and each Generator Owner that owns a generation or generator interconnection Facility Protection System shall have a Protection System maintenance and testing program for Protection Systems that affect the reliability of the BES. The program shall include:

R1.1. Maintenance and testing intervals and their basis.

R1.2. Summary of maintenance and testing procedures.

R2. Each Transmission Owner and any Distribution Provider that owns a transmission Protection System and each Generator Owner that owns a generation or generator interconnection Facility Protection System shall provide documentation of its Protection System maintenance and testing program and the implementation of that program to its Regional Entity on request (within 30 calendar days). The documentation of the program implementation shall include:

R2.1. Evidence Protection System devices were maintained and tested within the defined intervals.

R2.2. Date each Protection System device was last tested/maintained.

C. Measures

M1. Each Transmission Owner and any Distribution Provider that owns a transmission Protection System and each Generator Owner that owns a generation or generator interconnection Facility Protection System that affects the reliability of the BES, shall have an associated Protection System maintenance and testing program as defined in Requirement 1.

M2. Each Transmission Owner and any Distribution Provider that owns a transmission Protection System and each Generator Owner that owns a generation or generator interconnection Facility Protection System that affects the reliability of the BES, shall have evidence it provided documentation of its associated Protection System maintenance and testing program and the implementation of its program as defined in Requirement 2.

D. Compliance

1. Compliance Monitoring Process

1.1. Compliance Monitoring Responsibility

Regional Entity.

1.2. Compliance Monitoring Period and Reset Time Frame

One calendar year.

1.3. Data Retention

The following evidence retention periods identify the period of time an entity is required to retain specific evidence to demonstrate compliance. For instances where the evidence retention period specified below is shorter than the time since the last audit, the Compliance Enforcement Authority may ask an entity to provide other evidence to show that it was compliant for the full time period since the last audit.

The Transmission Owner and any Distribution Provider that owns a transmission Protection System and each Generator Owner that owns a generation or generator interconnection Facility Protection System, shall retain evidence of the implementation of its Protection System maintenance and testing program for three years.

The Compliance Monitor shall retain any audit data for three years.

1.4. Additional Compliance Information

The Transmission Owner and any Distribution Provider that owns a transmission Protection System and the Generator Owner that owns a generation or generator interconnection Facility Protection System, shall each demonstrate compliance through self-certification or audit (periodic, as part of targeted monitoring or initiated by complaint or event), as determined by the Compliance Monitor.

2. Violation Severity Levels (no changes)

E. Regional Differences

None identified.

Version History

Version	Date	Action	Change Tracking
0	April 1, 2005	Effective Date	New
1	December 1, 2005	1. Changed incorrect use of certain hyphens (-) to “en dash” (–) and “em dash (—).” 2. Added “periods” to items where appropriate. 3. Changed “Timeframe” to “Time Frame” in item D, 1.2.	01/20/05
1a	February 17, 2011	Added Appendix 1 - Interpretation regarding applicability of standard to protection of radially connected	Project 2009-17 interpretation

		transformers	
1a	February 17, 2011	Adopted by Board of Trustees	
1a	September 26, 2011	FERC Order issued approving interpretation of R1 and R2 (FERC's Order is effective as of September 26, 2011)	
1.1a	February 1, 2012	Errata change: Clarified inclusion of generator interconnection Facility in Generator Owner's responsibility	Revision under Project 2010-07
1b	February 3, 2012	FERC Order issued approving interpretation of R1, R1.1, and R1.2 (FERC's Order dated March 14, 2012). Updated version from 1a to 1b.	Project 2009-10 Interpretation
1.1b	April 23, 2012	Updated standard version to 1.1b to reflect FERC approval of PRC-005-1b.	Revision under Project 2010-07
1.1b	May 9, 2012	Adopted by Board of Trustees	

Appendix 1

Requirement Number and Text of Requirement
R1. Each Transmission Owner and any Distribution Provider that owns a transmission Protection System and each Generator Owner that owns a generation Protection System shall have a Protection System maintenance and testing program for Protection Systems that affect the reliability of the BES. The program shall include: **R1.1.** Maintenance and testing intervals and their basis. **R1.2.** Summary of maintenance and testing procedures. **R2.** Each Transmission Owner and any Distribution Provider that owns a transmission Protection System and each Generator Owner that owns a generation Protection System shall provide documentation of its Protection System maintenance and testing program and the implementation of that program to its Regional Reliability Organization on request (within 30 calendar days). The documentation of the program implementation shall include: **R2.1** Evidence Protection System devices were maintained and tested within the defined intervals. **R2.2** Date each Protection System device was last tested/maintained.
Question:
Is protection for a radially-connected transformer protection system energized from the BES considered a transmission Protection System subject to this standard?
Response:
The request for interpretation of PRC-005-1 Requirements R1 and R2 focuses on the applicability of the term "transmission Protection System." The NERC Glossary of Terms Used in Reliability Standards contains a definition of "Protection System" but does not contain a definition of transmission Protection System. In these two standards, use of the phrase transmission Protection System indicates that the requirements using this phrase are applicable to any Protection System that is installed for the purpose of detecting faults on transmission elements (lines, buses, transformers, etc.) identified as being included in the Bulk Electric System (BES) and trips an interrupting device that interrupts current supplied directly from the BES. A Protection System for a radially connected transformer energized from the BES would be considered a transmission Protection System and subject to these standards only if the protection trips an interrupting device that interrupts current supplied directly from the BES and the transformer is a BES element.

Appendix 2

Requirement Number and Text of Requirement
R1. Each Transmission Owner and any Distribution Provider that owns a transmission Protection System and each Generator Owner that owns a generation Protection System shall have a Protection System maintenance and testing program for Protection Systems that affect the reliability of the BES. The program shall include: **R1.1.** Maintenance and testing intervals and their basis. **R1.2.** Summary of maintenance and testing procedures.
Question:
1. Does R1 require a maintenance and testing program for the battery chargers for the “station batteries” that are considered part of the Protection System? 2. Does R1 require a maintenance and testing program for auxiliary relays and sensing devices? If so, what types of auxiliary relays and sensing devices? (i.e transformer sudden pressure relays) 3. Does R1 require maintenance and testing of transmission line re-closing relays? 4. Does R1 require a maintenance and testing program for the DC circuitry that is just the circuitry with relays and devices that control actions on breakers, etc., or does R1 require a program for the entire circuit from the battery charger to the relays to circuit breakers and all associated wiring? 5. For R1, what are examples of "associated communications systems" that are part of “Protection Systems” that require a maintenance and testing program?
Response:
1. While battery chargers are vital for ensuring “station batteries” are available to support Protection System functions, they are not identified within the definition of “Protection Systems.” Therefore, PRC-005-1 does not require maintenance and testing of battery chargers. 2. The existing definition of “Protection System” does not include auxiliary relays; therefore, maintenance and testing of such devices is not explicitly required. Maintenance and testing of such devices is addressed to the degree that an entity’s maintenance and testing program for 3 DC control circuits involves maintenance and testing of imbedded auxiliary relays. Maintenance and testing of devices that respond to quantities other than electrical quantities (for example, sudden pressure relays) are not included within Requirement R1. 3. No. “Protective Relays” refer to devices that detect and take action for abnormal conditions. Automatic restoration of transmission lines is not a “protective” function. 4. PRC-005-1 requires that entities 1) address DC control circuitry within their program, 2) have a basis for the way they address this item, and 3) execute the program. PRC-005-1 does not establish specific additional requirements relative to the scope and/or methods included within the program. 5. “Associated communication systems” refer to communication systems used to convey essential Protection System tripping logic, sometimes referred to as pilot relaying or teleprotection. Examples include the following: • communications equipment involved in power-line-carrier relaying • communications equipment involved in various types of permissive protection system

applications

- direct transfer-trip systems
- digital communication systems (which would include the protection system communications functions of standard IEC 618501 as well as various proprietary systems)

A. Introduction

1. Title: **Implementation and Documentation of Underfrequency Load Shedding Equipment Maintenance Program**

2. Number: PRC-008-0

3. Purpose: Provide last resort system preservation measures by implementing an Under Frequency Load Shedding (UFLS) program.

4. Applicability:

4.1. Transmission Owner required by its Regional Reliability Organization to have a UFLS program

4.2. Distribution Provider required by its Regional Reliability Organization to have a UFLS program

5. Effective Date: April 1, 2005

B. Requirements

R1. The Transmission Owner and Distribution Provider with a UFLS program (as required by its Regional Reliability Organization) shall have a UFLS equipment maintenance and testing program in place. This UFLS equipment maintenance and testing program shall include UFLS equipment identification, the schedule for UFLS equipment testing, and the schedule for UFLS equipment maintenance.

R2. The Transmission Owner and Distribution Provider with a UFLS program (as required by its Regional Reliability Organization) shall implement its UFLS equipment maintenance and testing program and shall provide UFLS maintenance and testing program results to its Regional Reliability Organization and NERC on request (within 30 calendar days).

C. Measures

M1. Each Transmission Owner's and Distribution Provider's UFLS equipment maintenance and testing program contains the elements specified in Reliability Standard PRC-007-0_R1.

M2. Each Transmission Owner and Distribution Provider shall have evidence that it provided the results of its UFLS equipment maintenance and testing program's implementation to its Regional Reliability Organization and NERC on request (within 30 calendar days).

D. Compliance

1. Compliance Monitoring Process

1.1. Compliance Monitoring Responsibility

Compliance Monitor: Regional Reliability Organization.

1.2. Compliance Monitoring Period and Reset Timeframe

On request (within 30 calendar days).

1.3. Data Retention

None specified.

1.4. Additional Compliance Information

None.

2. Levels of Non-Compliance

2.1. Level 1: Documentation of the maintenance and testing program was incomplete, but records indicate implementation was on schedule.

2.2. Level 2: Complete documentation of the maintenance and testing program was provided, but records indicate that implementation was not on schedule.

2.3. Level 3: Documentation of the maintenance and testing program was incomplete, and records indicate implementation was not on schedule.

2.4. Level 4: Documentation of the maintenance and testing program, or its implementation was not provided.

E. Regional Differences

1. None identified.

Version History

Version	Date	Action	Change Tracking
0	April 1, 2005	Effective Date	New

A. Introduction

1. Title: **Undervoltage Load Shedding System Maintenance and Testing**

2. Number: PRC-011-0

3. Purpose: Provide system preservation measures in an attempt to prevent system voltage collapse or voltage instability by implementing an Undervoltage Load Shedding (UVLS) program.

4. Applicability:

4.1. Transmission Owner that owns a UVLS system

4.2. Distribution Provider that owns a UVLS system

5. Effective Date: April 1, 2005

B. Requirements

R1. The Transmission Owner and Distribution Provider that owns a UVLS system shall have a UVLS equipment maintenance and testing program in place. This program shall include:

R1.1. The UVLS system identification which shall include but is not limited to:

R1.1.1. Relays.

R1.1.2. Instrument transformers.

R1.1.3. Communications systems, where appropriate.

R1.1.4. Batteries.

R1.2. Documentation of maintenance and testing intervals and their basis.

R1.3. Summary of testing procedure.

R1.4. Schedule for system testing.

R1.5. Schedule for system maintenance.

R1.6. Date last tested/maintained.

R2. The Transmission Owner and Distribution Provider that owns a UVLS system shall provide documentation of its UVLS equipment maintenance and testing program and the implementation of that UVLS equipment maintenance and testing program to its Regional Reliability Organization and NERC on request (within 30 calendar days).

C. Measures

M1. Each Transmission Owner and Distribution Provider that owns a UVLS system shall have documentation that its UVLS equipment maintenance and testing program conforms with Reliability Standard PRC-011-0_R1.

M2. Each Transmission Owner and Distribution Provider that owns a UVLS system shall have evidence it provided documentation of its UVLS equipment maintenance and testing program and the implementation of that UVLS equipment maintenance and testing program as specified in Reliability Standard PRC-011-0_R2.

D. Compliance

1. Compliance Monitoring Process

1.1. Compliance Monitoring Responsibility

Compliance Monitor: Regional Reliability Organization.

1.2. Compliance Monitoring Period and Reset Timeframe

On request (30 calendar days).

1.3. Data Retention

None specified.

1.4. Additional Compliance Information

None.

2. Levels of Non-Compliance

2.1. Level 1: Documentation of the maintenance and testing program was incomplete, but records indicate implementation was on schedule.

2.2. Level 2: Documentation of the maintenance and testing program was incomplete, but records indicate implementation was on schedule.

2.3. Level 3: Documentation of the maintenance and testing program was incomplete, and records indicate implementation was not on schedule.

2.4. Level 4: Documentation of the maintenance and testing program, or its implementation, was not provided.

E. Regional Differences

1. None identified.

Version History

Version	Date	Action	Change Tracking
0	April 1, 2005	Effective Date	New

A. Introduction

1. Title: **Special Protection System Maintenance and Testing**

2. Number: PRC-017-0

3. Purpose: To ensure that all Special Protection Systems (SPS) are properly designed, meet performance requirements, and are coordinated with other protection systems. To ensure that maintenance and testing programs are developed and misoperations are analyzed and corrected.

4. Applicability:

4.1. Transmission Owner that owns an SPS

4.2. Generator Owner that owns an SPS

4.3. Distribution Provider that owns an SPS

5. Effective Date: April 1, 2005

B. Requirements

R1. The Transmission Owner, Generator Owner, and Distribution Provider that owns an SPS shall have a system maintenance and testing program(s) in place. The program(s) shall include:

R1.1. SPS identification shall include but is not limited to:

R1.1.1. Relays.

R1.1.2. Instrument transformers.

R1.1.3. Communications systems, where appropriate.

R1.1.4. Batteries.

R1.2. Documentation of maintenance and testing intervals and their basis.

R1.3. Summary of testing procedure.

R1.4. Schedule for system testing.

R1.5. Schedule for system maintenance.

R1.6. Date last tested/maintained.

R2. The Transmission Owner, Generator Owner, and Distribution Provider that owns an SPS shall provide documentation of the program and its implementation to the appropriate Regional Reliability Organizations and NERC on request (within 30 calendar days).

C. Measures

M1. The Transmission Owner, Generator Owner, and Distribution Provider that owns an SPS shall have a system maintenance and testing program(s) in place that includes all items in Reliability Standard PRC-017-0_R1.

M2. The Transmission Owner, Generator Owner, and Distribution Provider that owns an SPS shall have evidence it provided documentation of the program and its implementation to the appropriate Regional Reliability Organizations and NERC on request (within 30 calendar days).

D. Compliance

1. Compliance Monitoring Process

1.1. Compliance Monitoring Responsibility

Compliance Monitor: Regional Reliability Organization. Each Region shall report compliance and violations to NERC via the NERC Compliance Reporting process.

Timeframe:
On request (30 calendar days.)

1.2. Compliance Monitoring Period and Reset Timeframe

Compliance Monitor: Regional Reliability Organization.

1.3. Data Retention

None specified.

1.4. Additional Compliance Information

None.

2. Levels of Non-Compliance

2.1. Level 1: Documentation of the maintenance and testing program was incomplete, but records indicate implementation was on schedule.

2.2. Level 2: Complete documentation of the maintenance and testing program was provided, but records indicate that implementation was not on schedule.

2.3. Level 3: Documentation of the maintenance and testing program was incomplete, and records indicate implementation was not on schedule.

2.4. Level 4: Documentation of the maintenance and testing program, or its implementation, was not provided.

E. Regional Differences

1. None identified.

Version History

Version	Date	Action	Change Tracking
0	April 1, 2005	Effective Date	New

NERC
NORTH AMERICAN ELECTRIC RELIABILITY CORPORATION

Standards Announcement

Project 2007-17 Protection System Maintenance PRC-005-2

Recirculation Ballot Window Open: October 15 – October 24, 2012

Now Available

A recirculation ballot window for PRC-005-2 – Protection System Maintenance is open through **8 p.m. Eastern on Wednesday, October 24, 2012**.

The Standard Processes Manual allows drafting teams to make changes following an initial or successive ballot with a goal of improving the quality of a standard (or definition), provided those changes do not alter the applicability or scope of the proposed standard (or definition). The Protection System Maintenance and Testing drafting team made the following minor clarifying edit to Table 1-2 "Component Type - Communications Systems" of the draft standard:

- Added an "s" to "communication" in several locations within Table 1-2. The term "communications system" is now used consistently throughout the table.

Instructions

In the recirculation ballot, votes are counted by exception. Only members of the ballot pool may cast a ballot; all ballot pool members may change their previously cast votes. A ballot pool member who failed to cast a ballot during the last ballot window may cast a ballot in the recirculation ballot window. If a ballot pool member does not participate in the recirculation ballot, that member's vote cast in the previous ballot will be carried over as that member's vote in the recirculation ballot.

Members of the ballot pool associated with this project may log in and submit their vote for the standard by clicking here.

Next Steps

Voting results will be posted and announced after the ballot window closes. If approved, the standard and its associated implementation plan will be submitted to the Board of Trustees for adoption and then filed with the appropriate regulatory authorities.

Background

The proposed PRC-005-2 – Protection System Maintenance standard addresses FERC directives from FERC Order 693, as well as issues identified by stakeholders. In accordance with the FERC directives, this draft standard establishes requirements for a time-based maintenance program, where all relevant devices are maintained according to prescribed maximum intervals. It further establishes requirements for a condition-based maintenance program, where the hands-on maintenance intervals are adjusted to reflect the known and reported condition of the relevant devices. For a performance-based maintenance program, it ascertains where the hands-on maintenance intervals are adjusted to reflect the historical performance of the relevant devices.

Additional information is available on the project page.

Standards Process

The Standard Processes Manual contains all the procedures governing the standards development process. The success of the NERC standards development process depends on stakeholder participation. We extend our thanks to all those who participate.

For more information or assistance, please contact Wendy Muller, Standards Development Administrator, at wendy.muller@nerc.net or at 404-446-2560.

North American Electric Reliability Corporation
3353 Peachtree Rd.NE
Suite 600, North Tower
Atlanta, GA 30326
404-446-2560 | www.nerc.com

NERC
NORTH AMERICAN ELECTRIC RELIABILITY CORPORATION

Standards Announcement

Project 2007-17 – Protection System Maintenance & Testing

Recirculation Ballot Results

Now Available

A recirculation ballot for PRC-005-2 – Protection System Maintenance concluded on Wednesday, October 24, 2012.

Voting statistics are listed below, and the Ballot Results page provides a link to the detailed results.

Ballot Results
Quorum: 81.08%
Approval: 80.51%

Next Steps

The standard will be presented to the Board of Trustees for adoption and then filed with the appropriate regulatory authorities.

Background

The proposed PRC-005-2 – Protection System Maintenance standard addresses FERC directives from FERC Order 693, as well as issues identified by stakeholders. In accordance with the FERC directives, this draft standard establishes requirements for a time-based maintenance program, where all relevant devices are maintained according to prescribed maximum intervals. It further establishes requirements for a condition-based maintenance program, where the hands-on maintenance intervals are adjusted to reflect the known and reported condition of the relevant devices. For a performance-based maintenance program, it ascertains where the hands-on maintenance intervals are adjusted to reflect the historical performance of the relevant devices.

Documents for this project are posted on the project page.

Standards Development Process

The Standards Processes Manual contains all the procedures governing the standards development process. The success of the NERC standards development process depends on stakeholder participation. We extend our thanks to all those who participate.

For more information or assistance, please contact Monica Benson, Standards Development Administrator, at monica.benson@nerc.net or at 404-446-2560.

North American Electric Reliability Corporation
3353 Peachtree Rd, NE
Suite 600, North Tower
Atlanta, GA 30326
404-446-2560 | www.nerc.com

NERC
NORTH AMERICAN ELECTRIC RELIABILITY CORPORATION

Newsroom • Site Map • Contact NERC

SEARCH NERC.com

Advanced Search GO

About NERC | Standards | Compliance | Assessments & Trends | Events Analysis | Programs

User Name

Password

Log in

Register

-Ballot Pools
-Current Ballots
-Ballot Results
-Registered Ballot Body
-Proxy Voters

Home Page

Ballot Results

Ballot Name:	Project 2007-17 Recirculation Ballot PRC-005-2 October 2012_in
Ballot Period:	10/15/2012 - 10/24/2012
Ballot Type:	Initial
Total # Votes:	300
Total Ballot Pool:	370
Quorum:	**81.08 % The Quorum has been reached**
Weighted Segment Vote:	80.51 %
Ballot Results:	**The Standard has Passed**

Summary of Ballot Results

Segment	Ballot Pool	Segment Weight	Affirmative # Votes	Affirmative Fraction	Negative # Votes	Negative Fraction	Abstain # Votes	No Vote
1 - Segment 1.	90	1	58	0.817	13	0.183	3	16
2 - Segment 2.	6	0.4	4	0.4	0	0	0	2
3 - Segment 3.	98	1	48	0.696	21	0.304	9	20
4 - Segment 4.	30	1	17	0.739	6	0.261	2	5
5 - Segment 5.	80	1	44	0.759	14	0.241	6	16
6 - Segment 6.	47	1	26	0.722	10	0.278	3	8
7 - Segment 7.	0	0	0	0	0	0	0	0
8 - Segment 8.	11	0.4	4	0.4	0	0	4	3
9 - Segment 9.	2	0.2	2	0.2	0	0	0	0
10 - Segment 10.	6	0.5	5	0.5	0	0	1	0
Totals	**370**	**6.5**	**208**	**5.233**	**64**	**1.267**	**28**	**70**

Individual Ballot Pool Results

Segment	Organization	Member	Ballot	Comments
1	Ameren Services	Kirit Shah	Affirmative	
1	American Electric Power	Paul B. Johnson	Affirmative	
1	American Transmission Company, LLC	Andrew Z Pusztai	Negative	
1	Arizona Public Service Co.	Robert Smith	Negative	
1	Associated Electric Cooperative, Inc.	John Bussman	Affirmative	
1	Austin Energy	James Armke	Affirmative	
1	Balancing Authority of Northern California	Kevin Smith	Affirmative	
1	Baltimore Gas & Electric Company	Gregory S Miller	Abstain	

1	BC Hydro and Power Authority	Patricia Robertson	Affirmative	
1	Beaches Energy Services	Joseph S Stonecipher	Negative	
1	Black Hills Corp	Eric Egge		
1	Bonneville Power Administration	Donald S. Watkins	Negative	
1	Brazos Electric Power Cooperative, Inc.	Tony Kroskey		
1	CenterPoint Energy Houston Electric	Dale Bodden	Affirmative	
1	Central Maine Power Company	Kevin L Howes		
1	City of Tacoma, Department of Public Utilities, Light Division, dba Tacoma Power	Chang G Choi	Affirmative	
1	City Utilities of Springfield, Missouri	Jeff Knottek	Affirmative	
1	Cleco Power LLC	Danny McDaniel		
1	Colorado Springs Utilities	Paul Morland		
1	Consolidated Edison Co. of New York	Christopher L de Graffenried	Affirmative	
1	Consumers Power Inc.	Stuart Sloan	Negative	
1	CPS Energy	Richard Castrejana	Affirmative	
1	Dairyland Power Coop.	Robert W. Roddy	Affirmative	
1	Dayton Power & Light Co.	Hertzel Shamash	Affirmative	
1	Dominion Virginia Power	Michael S Crowley	Affirmative	
1	Entergy Services, Inc.	Edward J Davis	Affirmative	
1	FirstEnergy Corp.	William J Smith	Affirmative	
1	Florida Keys Electric Cooperative Assoc.	Dennis Minton	Affirmative	
1	Gainesville Regional Utilities	Luther E. Fair		
1	Georgia Transmission Corporation	Harold Taylor	Affirmative	
1	Great River Energy	Gordon Pietsch	Affirmative	
1	Hoosier Energy Rural Electric Cooperative, Inc.	Bob Solomon		
1	Hydro One Networks, Inc.	Ajay Garg	Affirmative	
1	Hydro-Quebec TransEnergie	Bernard Pelletier	Affirmative	
1	Idaho Power Company	Ronald D Schellberg		
1	Imperial Irrigation District	Tino Zaragoza	Affirmative	
1	International Transmission Company Holdings Corp	Michael Moltane	Affirmative	
1	Kansas City Power & Light Co.	Michael Gammon		
1	Lee County Electric Cooperative	John W Delucca	Affirmative	
1	Lincoln Electric System	Doug Bantam		
1	Long Island Power Authority	Robert Ganley	Affirmative	
1	Los Angeles Department of Water & Power	Ly M Le		
1	Lower Colorado River Authority	Martyn Turner	Affirmative	
1	Manitoba Hydro	Joe D Petaski	Negative	
1	MEAG Power	Danny Dees	Affirmative	
1	MidAmerican Energy Co.	Terry Harbour	Affirmative	
1	Minnkota Power Coop. Inc.	Richard Burt	Affirmative	
1	Muscatine Power & Water	Tim Reed		
1	N.W. Electric Power Cooperative, Inc.	Mark Ramsey	Affirmative	
1	Nebraska Public Power District	Cole C Brodine	Negative	
1	New Brunswick Power Transmission Corporation	Randy MacDonald	Abstain	
1	Northeast Missouri Electric Power Cooperative	Kevin White	Affirmative	
1	Northeast Utilities	David Boguslawski	Affirmative	
1	Northern Indiana Public Service Co.	Kevin M Largura	Negative	
1	NorthWestern Energy	John Canavan	Negative	
1	Ohio Valley Electric Corp.	Robert Mattey	Negative	
1	Omaha Public Power District	Doug Peterchuck	Affirmative	
1	Oncor Electric Delivery	Brenda Pulis	Affirmative	
1	Orlando Utilities Commission	Brad Chase		
1	Otter Tail Power Company	Daryl Hanson		
1	PacifiCorp	Colt Norrish		
1	PECO Energy	Ronald Schloendorn	Affirmative	
1	Platte River Power Authority	John C. Collins	Affirmative	
1	Portland General Electric Co.	John T Walker	Affirmative	
1	Potomac Electric Power Co.	David Thorne	Affirmative	
1	PPL Electric Utilities Corp.	Brenda L Truhe	Affirmative	
1	Progress Energy Carolinas	Brett A. Koelsch	Abstain	
1	Public Service Company of New Mexico	Laurie Williams		
1	Public Service Electric and Gas Co.	Kenneth D. Brown	Affirmative	
1	Public Utility District No. 1 of Okanogan County	Dale Dunckel	Affirmative	
1	Puget Sound Energy, Inc.	Denise M Lietz	Affirmative	

1	Rochester Gas and Electric Corp.	John C. Allen	Affirmative	
1	Sacramento Municipal Utility District	Tim Kelley	Affirmative	
1	Salt River Project	Robert Kondziolka	Affirmative	
1	Santee Cooper	Terry L Blackwell	Affirmative	
1	Seattle City Light	Pawel Krupa	Negative	
1	Sho-Me Power Electric Cooperative	Denise Stevens	Affirmative	
1	Sierra Pacific Power Co.	Rich Salgo	Affirmative	
1	Snohomish County PUD No. 1	Long T Duong	Affirmative	
1	South California Edison Company	Steven Mavis	Affirmative	
1	Southern Company Services, Inc.	Robert A. Schaffeld	Affirmative	
1	Southwest Transmission Cooperative, Inc.	James Jones	Affirmative	
1	Sunflower Electric Power Corporation	Noman Lee Williams	Affirmative	
1	Tennessee Valley Authority	Larry G Akens	Negative	
1	Tri-State G & T Association, Inc.	Tracy Sliman	Affirmative	
1	United Illuminating Co.	Jonathan Appelbaum	Affirmative	
1	Westar Energy	Allen Klassen	Affirmative	
1	Western Area Power Administration	Brandy A Dunn	Negative	
1	Western Farmers Electric Coop.	Forrest Brock	Affirmative	
1	Xcel Energy, Inc.	Gregory L Pieper	Affirmative	
2	Alberta Electric System Operator	Mark B Thompson		
2	BC Hydro	Venkataramakrishnan Vinnakota	Affirmative	
2	Independent Electricity System Operator	Barbara Constantinescu	Affirmative	
2	Midwest ISO, Inc.	Marie Knox		
2	New Brunswick System Operator	Alden Briggs	Affirmative	
2	PJM Interconnection, L.L.C.	Tom Bowe	Affirmative	
3	AEP	Michael E Deloach	Affirmative	
3	Alabama Power Company	Richard J. Mandes	Affirmative	
3	Ameren Services	Mark Peters	Affirmative	
3	APS	Steven Norris	Negative	
3	Arkansas Electric Cooperative Corporation	Philip Huff	Abstain	
3	Atlantic City Electric Company	NICOLE BUCKMAN	Affirmative	
3	BC Hydro and Power Authority	Pat G. Harrington	Affirmative	
3	Blachly-Lane Electric Co-op	Bud Tracy	Abstain	
3	Bonneville Power Administration	Rebecca Berdahl	Negative	
3	Central Electric Cooperative, Inc. (Redmond, Oregon)	Dave Markham	Abstain	
3	Central Electric Power Cooperative	Ralph J Schulte		
3	Central Lincoln PUD	Steve Alexanderson	Affirmative	
3	City of Austin dba Austin Energy	Andrew Gallo	Affirmative	
3	City of Clewiston	Lynne Mila	Negative	
3	City of Farmington	Linda R Jacobson	Affirmative	
3	City of Garland	Ronnie C Hoeinghaus		
3	City of Green Cove Springs	Gregg R Griffin	Abstain	
3	City of Redding	Bill Hughes	Affirmative	
3	Clearwater Power Co.	Dave Hagen	Negative	
3	Cleco Corporation	Michelle A Corley	Affirmative	
3	Colorado Springs Utilities	Lisa Cleary		
3	ComEd	Bruce Krawczyk	Affirmative	
3	Consolidated Edison Co. of New York	Peter T Yost	Affirmative	
3	Constellation Energy	CJ Ingersoll		
3	Consumers Energy	Richard Blumenstock	Negative	
3	Consumers Power Inc.	Roman Gillen	Negative	
3	Coos-Curry Electric Cooperative, Inc	Roger Meader	Negative	
3	Cowlitz County PUD	Russell A Noble	Affirmative	
3	CPS Energy	Jose Escamilla	Affirmative	
3	Delmarva Power & Light Co.	Michael R. Mayer	Affirmative	
3	Dominion Resources Services	Michael F. Gildea	Affirmative	
3	Douglas Electric Cooperative	Dave Sabala		
3	Duke Energy Carolina	Henry Ernst-Jr	Abstain	
3	Fall River Rural Electric Cooperative	Bryan Case	Abstain	
3	FirstEnergy Energy Delivery	Stephan Kern	Affirmative	
3	Flathead Electric Cooperative	John M Goroski		
3	Florida Municipal Power Agency	Joe McKinney	Negative	
3	Florida Power Corporation	Lee Schuster	Negative	
3	Gainesville Regional Utilities	Kenneth Simmons	Negative	
3	Georgia Power Company	Anthony L Wilson	Affirmative	

3	Georgia Systems Operations Corporation	William N. Phinney	Affirmative	
3	Great River Energy	Sam Kokkinen	Affirmative	
3	Gulf Power Company	Paul C Caldwell	Affirmative	
3	Hydro One Networks, Inc.	David Kiguel	Affirmative	
3	Imperial Irrigation District	Jesus S. Alcaraz	Affirmative	
3	JEA	Garry Baker		
3	Kansas City Power & Light Co.	Charles Locke		
3	Kissimmee Utility Authority	Gregory D Woessner	Negative	
3	Lakeland Electric	Mace D Hunter	Negative	
3	Lane Electric Cooperative, Inc.	Rick Crinklaw	Abstain	
3	Lincoln Electric Cooperative, Inc.	Michael Henry		
3	Lincoln Electric System	Jason Fortik	Affirmative	
3	Lost River Electric Cooperative	Richard Reynolds		
3	Louisville Gas and Electric Co.	Charles A. Freibert	Affirmative	
3	M & A Electric Power Cooperative	Stephen D Pogue	Affirmative	
3	Manitoba Hydro	Greg C. Parent	Negative	
3	Manitowoc Public Utilities	Thomas E Reed	Affirmative	
3	MidAmerican Energy Co.	Thomas C. Mielnik	Affirmative	
3	Mississippi Power	Jeff Franklin	Affirmative	
3	Modesto Irrigation District	Jack W Savage	Affirmative	
3	Municipal Electric Authority of Georgia	Steven M. Jackson		
3	Muscatine Power & Water	John S Bos	Affirmative	
3	Nebraska Public Power District	Tony Eddleman	Negative	
3	New York Power Authority	Marilyn Brown	Affirmative	
3	Niagara Mohawk (National Grid Company)	Michael Schiavone	Affirmative	
3	Northeast Missouri Electric Power Cooperative	Skyler Wiegmann	Affirmative	
3	Northern Indiana Public Service Co.	William SeDoris	Negative	
3	Northern Lights Inc.	Jon Shelby	Negative	
3	Okanogan County Electric Cooperative, Inc.	Ray Ellis		
3	Orange and Rockland Utilities, Inc.	David Burke	Affirmative	
3	Orlando Utilities Commission	Ballard K Mutters		
3	Owensboro Municipal Utilities	Thomas T Lyons	Negative	
3	Pacific Gas and Electric Company	John H Hagen	Affirmative	
3	Platte River Power Authority	Terry L Baker	Affirmative	
3	Potomac Electric Power Co.	Robert Reuter	Affirmative	
3	Progress Energy Carolinas	Sam Waters		
3	Public Service Electric and Gas Co.	Jeffrey Mueller	Affirmative	
3	Public Utility District No. 1 of Clallam County	David Proebstel		
3	Public Utility District No. 2 of Grant County	Greg Lange		
3	Puget Sound Energy, Inc.	Erin Apperson		
3	Raft River Rural Electric Cooperative	Heber Carpenter	Abstain	
3	Rayburn Country Electric Coop., Inc.	Eddy Reece		
3	Rutherford EMC	Thomas M Haire	Affirmative	
3	Sacramento Municipal Utility District	James Leigh-Kendall	Affirmative	
3	Salmon River Electric Cooperative	Ken Dizes	Affirmative	
3	Salt River Project	John T. Underhill	Affirmative	
3	Santee Cooper	James M Poston	Affirmative	
3	Seattle City Light	Dana Wheelock	Negative	
3	Seminole Electric Cooperative, Inc.	James R Frauen	Negative	
3	South Carolina Electric & Gas Co.	Hubert C Young		
3	South Mississippi Electric Power Association	Gary Hutson		
3	Tacoma Public Utilities	Travis Metcalfe	Affirmative	
3	Tampa Electric Co.	Ronald L. Donahey	Affirmative	
3	Tennessee Valley Authority	Ian S Grant	Negative	
3	Umatilla Electric Cooperative	Steve Eldrige	Negative	
3	West Oregon Electric Cooperative, Inc.	Marc M Farmer	Abstain	
3	Wisconsin Electric Power Marketing	James R Keller	Affirmative	
3	Xcel Energy, Inc.	Michael Ibold	Affirmative	
4	Alliant Energy Corp. Services, Inc.	Kenneth Goldsmith	Affirmative	
4	American Public Power Association	Allen Mosher	Affirmative	
4	Central Lincoln PUD	Shamus J Gamache	Affirmative	
4	City of Austin dba Austin Energy	Reza Ebrahimian	Affirmative	
4	City of Clewiston	Kevin McCarthy	Negative	
4	City of New Smyrna Beach Utilities Commission	Tim Beyrle		
4	City of Redding	Nicholas Zettel	Affirmative	
4	City Utilities of Springfield, Missouri	John Allen	Affirmative	

4	Consumers Energy	David Frank Ronk	Negative	
4	Cowlitz County PUD	Rick Syring	Affirmative	
4	Flathead Electric Cooperative	Russ Schneider	Abstain	
4	Florida Municipal Power Agency	Frank Gaffney	Negative	
4	Fort Pierce Utilities Authority	Thomas Richards		
4	Georgia System Operations Corporation	Guy Andrews	Affirmative	
4	Illinois Municipal Electric Agency	Bob C. Thomas	Negative	
4	Imperial Irrigation District	Diana U Torres	Affirmative	
4	Indiana Municipal Power Agency	Jack Alvey		
4	Madison Gas and Electric Co.	Joseph DePoorter	Affirmative	
4	Modesto Irrigation District	Spencer Tacke	Affirmative	
4	Northern California Power Agency	Tracy R Bibb		
4	Ohio Edison Company	Douglas Hohlbaugh	Affirmative	
4	Pacific Northwest Generating Cooperative	Aleka K Scott	Abstain	
4	Public Utility District No. 1 of Douglas County	Henry E. LuBean	Affirmative	
4	Public Utility District No. 1 of Snohomish County	John D Martinsen	Affirmative	
4	Sacramento Municipal Utility District	Mike Ramirez	Affirmative	
4	Seattle City Light	Hao Li	Negative	
4	Seminole Electric Cooperative, Inc.	Steven R Wallace	Negative	
4	South Mississippi Electric Power Association	Steven McElhaney		
4	Tacoma Public Utilities	Keith Morisette	Affirmative	
4	Wisconsin Energy Corp.	Anthony Jankowski	Affirmative	
5	AEP Service Corp.	Brock Ondayko	Affirmative	
5	AES Corporation	Leo Bernier	Affirmative	
5	Amerenue	Sam Dwyer	Affirmative	
5	Arizona Public Service Co.	Edward Cambridge	Negative	
5	BC Hydro and Power Authority	Clement Ma	Affirmative	
5	Boise-Kuna Irrigation District/dba Lucky peak power plant project	Mike D Kukla	Negative	
5	Bonneville Power Administration	Francis J. Halpin	Negative	
5	City and County of San Francisco	Daniel Mason	Affirmative	
5	City of Austin dba Austin Energy	Jeanie Doty	Affirmative	
5	City of Grand Island	Jeff Mead	Abstain	
5	City of Redding	Paul A. Cummings	Affirmative	
5	City of Tacoma, Department of Public Utilities, Light Division, dba Tacoma Power	Max Emrick		
5	Cleco Power	Stephanie Huffman	Affirmative	
5	Cogentrix Energy, Inc.	Mike D Hirst	Affirmative	
5	Colorado Springs Utilities	Jennifer Eckels	Affirmative	
5	Consolidated Edison Co. of New York	Wilket (Jack) Ng	Affirmative	
5	Constellation Power Source Generation, Inc.	Amir Y Hammad		
5	Cowlitz County PUD	Bob Essex	Affirmative	
5	CPS Energy	Robert Stevens		
5	Detroit Edison Company	Christy Wicke	Negative	
5	Dominion Resources, Inc.	Mike Garton	Affirmative	
5	Duke Energy	Dale Q Goodwine	Negative	
5	Dynegy Inc.	Dan Roethemeyer	Affirmative	
5	East Kentucky Power Coop.	Stephen Ricker	Affirmative	
5	Exelon Nuclear	Michael Korchynsky	Affirmative	
5	ExxonMobil Research and Engineering	Martin Kaufman		
5	FirstEnergy Solutions	Kenneth Dresner	Affirmative	
5	Florida Municipal Power Agency	David Schumann	Negative	
5	Great River Energy	Preston L Walsh	Affirmative	
5	Green Country Energy	Greg Froehling		
5	Imperial Irrigation District	Marcela Y Caballero	Affirmative	
5	Invenergy LLC	Alan Beckham	Affirmative	
5	JEA	John J Babik		
5	Kissimmee Utility Authority	Mike Blough	Abstain	
5	Lakeland Electric	James M Howard	Negative	
5	Liberty Electric Power LLC	Daniel Duff	Affirmative	
5	Lincoln Electric System	Dennis Florom	Affirmative	
5	Los Angeles Department of Water & Power	Kenneth Silver	Affirmative	
5	Lower Colorado River Authority	Tom Foreman	Affirmative	
5	Luminant Generation Company LLC	Mike Laney	Affirmative	
5	Manitoba Hydro	S N Fernando	Negative	
5	Massachusetts Municipal Wholesale Electric Company	David Gordon	Abstain	

5	MEAG Power	Steven Grego		
5	MidAmerican Energy Co.	Christopher Schneider		
5	Muscatine Power & Water	Mike Avesing	Affirmative	
5	Nebraska Public Power District	Don Schmit	Negative	
5	New Harquahala Generating Co. LLC	Nathaniel Larson		
5	New York Power Authority	Gerald Mannarino	Affirmative	
5	North Carolina Electric Membership Corp.	Jeffrey S Brame	Affirmative	
5	Northern Indiana Public Service Co.	William O. Thompson	Negative	
5	Occidental Chemical	Michelle R DAntuono	Affirmative	
5	Oklahoma Gas and Electric Co.	Kim Morphis	Affirmative	
5	Omaha Public Power District	Mahmood Z. Safi	Affirmative	
5	Orlando Utilities Commission	Richard Kinas		
5	Pacific Gas and Electric Company	Richard J. Padilla	Affirmative	
5	PacifiCorp	Sandra L. Shaffer	Affirmative	
5	Platte River Power Authority	Roland Thiel	Abstain	
5	Portland General Electric Co.	Gary L Tingley	Affirmative	
5	PPL Generation LLC	Annette M Bannon	Affirmative	
5	Progress Energy Carolinas	Wayne Lewis		
5	Proven Compliance Solutions	Mitchell E Needham	Abstain	
5	PSEG Fossil LLC	Mikhail Falkovich	Affirmative	
5	Puget Sound Energy, Inc.	Tom Flynn	Affirmative	
5	Sacramento Municipal Utility District	Bethany Hunter	Affirmative	
5	Salt River Project	Glen Reeves		
5	Santee Cooper	Lewis P Pierce	Affirmative	
5	Seattle City Light	Michael J. Haynes	Negative	
5	Seminole Electric Cooperative, Inc.	Brenda K. Atkins	Negative	
5	Snohomish County PUD No. 1	Sam Nietfeld	Affirmative	
5	South Mississippi Electric Power Association	Jerry W Johnson		
5	Southern Company Generation	William D Shultz	Affirmative	
5	Tampa Electric Co.	RJames Rocha	Negative	
5	Tenaska, Inc.	Scott M. Helyer	Abstain	
5	Tennessee Valley Authority	David Thompson	Negative	
5	Tri-State G & T Association, Inc.	Barry Ingold	Affirmative	
5	U.S. Army Corps of Engineers	Melissa Kurtz	Affirmative	
5	U.S. Bureau of Reclamation	Martin Bauer		
5	Westar Energy	Bo Jones		
5	Western Farmers Electric Coop.	Caleb J Muckala		
5	Wisconsin Electric Power Co.	Linda Horn	Affirmative	
6	AEP Marketing	Edward P. Cox	Affirmative	
6	APS	Randy A. Young	Negative	
6	Associated Electric Cooperative, Inc.	Brian Ackermann	Affirmative	
6	Bonneville Power Administration	Brenda S. Anderson	Negative	
6	City of Austin dba Austin Energy	Lisa L Martin	Affirmative	
6	City of Redding	Marvin Briggs	Affirmative	
6	Cleco Power LLC	Robert Hirchak	Affirmative	
6	Colorado Springs Utilities	Lisa C Rosintoski	Affirmative	
6	Consolidated Edison Co. of New York	Nickesha P Carrol	Affirmative	
6	Constellation Energy Commodities Group	Brenda L Powell	Affirmative	
6	Dominion Resources, Inc.	Louis S. Slade	Affirmative	
6	Duke Energy Carolina	Walter Yeager	Negative	
6	Exelon Power Team	Pulin Shah		
6	FirstEnergy Solutions	Kevin Querry	Affirmative	
6	Florida Municipal Power Agency	Richard L. Montgomery	Negative	
6	Florida Municipal Power Pool	Thomas Washburn		
6	Florida Power & Light Co.	Silvia P. Mitchell	Negative	
6	Great River Energy	Donna Stephenson		
6	Imperial Irrigation District	Cathy Bretz	Affirmative	
6	Kansas City Power & Light Co.	Jessica L Klinghoffer		
6	Lakeland Electric	Paul Shipps	Negative	
6	Lincoln Electric System	Eric Ruskamp	Affirmative	
6	Manitoba Hydro	Daniel Prowse	Negative	
6	MidAmerican Energy Co.	Dennis Kimm	Abstain	
6	Muscatine Power & Water	John Stolley	Affirmative	
6	New York Power Authority	William Palazzo	Affirmative	
6	Northern Indiana Public Service Co.	Joseph O'Brien	Negative	
6	NRG Energy, Inc.	Alan Johnson	Abstain	
6	Omaha Public Power District	David Ried	Affirmative	

6	PacifiCorp	Scott L Smith		
6	Platte River Power Authority	Carol Ballantine	Affirmative	
6	PPL EnergyPlus LLC	Mark A Heimbach	Affirmative	
6	Progress Energy	John T Sturgeon	Abstain	
6	PSEG Energy Resources & Trade LLC	Peter Dolan	Affirmative	
6	Public Utility District No. 1 of Chelan County	Hugh A. Owen		
6	Sacramento Municipal Utility District	Claire Warshaw	Affirmative	
6	Salt River Project	Steven J Hulet	Affirmative	
6	Santee Cooper	Michael Brown	Affirmative	
6	Seattle City Light	Dennis Sismaet	Negative	
6	Seminole Electric Cooperative, Inc.	Trudy S. Novak		
6	Snohomish County PUD No. 1	William T Moojen	Affirmative	
6	South California Edison Company	Lujuanna Medina	Affirmative	
6	Southern Company Generation and Energy Marketing	John J. Ciza	Affirmative	
6	Tacoma Public Utilities	Michael C Hill	Affirmative	
6	Tampa Electric Co.	Benjamin F Smith II		
6	Tennessee Valley Authority	Marjorie S. Parsons	Negative	
6	Xcel Energy, Inc.	David F Lemmons	Affirmative	
8		Roger C Zaklukiewicz	Abstain	
8		Edward C Stein		
8		Merle Ashton	Affirmative	
8		Kristina M. Loudermilk		
8		James A Maenner		
8	INTELLIBIND	Kevin Conway	Abstain	
8	JDRJC Associates	Jim Cyrulewski	Affirmative	
8	Pacific Northwest Generating Cooperative	Margaret Ryan	Abstain	
8	Transmission Strategies, LLC	Bernie M Pasternack	Abstain	
8	Utility Services, Inc.	Brian Evans-Mongeon	Affirmative	
8	Volkmann Consulting, Inc.	Terry Volkmann	Affirmative	
9	Commonwealth of Massachusetts Department of Public Utilities	Donald Nelson	Affirmative	
9	National Association of Regulatory Utility Commissioners	Diane J. Barney	Affirmative	
10	New York State Reliability Council	Alan Adamson	Affirmative	
10	Northeast Power Coordinating Council	Guy V. Zito	Affirmative	
10	ReliabilityFirst Corporation	Anthony E Jablonski	Abstain	
10	SERC Reliability Corporation	Carter B. Edge	Affirmative	
10	Texas Reliability Entity, Inc.	Donald G Jones	Affirmative	
10	Western Electricity Coordinating Council	Steven L. Rueckert	Affirmative	

Legal and Privacy
404.446.2560 voice : 404.446.2595 fax
Atlanta Office: 3353 Peachtree Road, N.E. : Suite 600, North Tower : Atlanta, GA 30326
Washington Office: 1325 G Street, N.W. : Suite 600 : Washington, DC 20005-3801

Account Log-In/Register

Copyright © 2012 by the North American Electric Reliability Corporation. : All rights reserved.
A New Jersey Nonprofit Corporation

Exhibit K

Standard Drafting Team Roster for NERC Standards Development Project 2007- 17 (Protection System Maintenance and Testing)

Project 2007-17 Protection System Maintenance and Testing Team Roster

John Anderson Principal Engineer Xcel Energy, Inc. 1518 Chestnut Avenue N. 2nd Floor Minneapolis MN 55403 Business: (612) 630-4630 john.b.anderson@xcelenergy.com	John Anderson is presently a Principal Engineer with Xcel Energy and is responsible for the development and implementation of the company's power plant electrical distribution system equipment maintenance programs including those for plant protective relay systems, power transformers, circuit breakers and battery systems. He has served in this capacity since 1998. Prior to taking on this fleet wide coordination role, he served for 8 years as an Electrical System Engineer at Xcel Energy's Monticello Nuclear Generating Station with responsibilities including coordination of the plant's protection system testing program. During this time, Mr. Anderson earned a Senior Reactor Operator Certification for the plant. Prior to joining Northern State Power Company in 1990, Mr. Anderson completed the Navy Nuclear Propulsion Officer training program and served as a Nuclear Propulsion Plant Watch Officer and Electrical Distribution Officer aboard the USS ENTERPRISE (CVN-65). He holds a BSEE from the University of Minnesota.
Merle Ashton Substation Maintenance Supervisor Tri-State G & T Association, Inc. 12496 Rd 23 Cortez CO 81321 Business: (970) 759-6139 rashton@tristategt.org	Rick Ashton is presently a Substation Maintenance Supervisor for Tri-State Generation and Transmission Assn., Inc. Rick has held this position since 2006; prior to 2006 Rick was a Substation Technician for this same company since 1981. As a Substation Technician, Rick's primary responsibility was the maintenance of Protection System components and other equipment within the substation yard and control house. Relays (protective and otherwise), batteries, transformers, circuit breakers, regulators, switches were all within his area of influence. These years of hands-on experience provided Rick opportunities to observe and investigate many different equipment failures; to use a variety of test equipment, and employ many test methods. As owner/operator of relaytech.com, Rick has authored many titles of "how-to" books that assist in the training of relay technicians. Rick travels to utilities, testing companies, and consulting firms upon request for training relay technicians, and other personnel. Rick imparts his overall knowledge of Protection Systems, their characteristics and interactions, as well as the math and theory behind it all, providing technical personnel with a better working understanding of the entire substation.
Bob Bentert Principal Engineer Florida Power & Light Co. 700 Universe Boulevard Juno Beach FL 33408 Business: (561) 904-3283 bob_bentert@fpl.com	Bob Bentert is a Principal Engineer at Florida Power & Light Co., where he has been employed since 2001. Bob is responsible for the operation of transmission protection systems and analyzing and reporting protection system Misoperations to the Florida Reliability Coordinating Council (FRCC), where he is an active member of the System Protection and Control Subcommittee (SPCS). Prior to FPL, Bob was the Technical Services Manager for GEC Alstom Protection and Control. Bob holds an A.S. degree from Westchester College and has over 30 years experience with protection and control systems. Bob is a member of IEEE and a member of IEEE PSRC working group that prepared the 2001 special report, "A Survey of Relaying Test Practices".
Forrest D. Brock Superintendent of Station Services Western Farmers Electric Cooperative 701 NE 7th Street PO Box 429 Anadarko, Oklahoma, 73005-0429	Forrest Brock is the Superintendent of Station Services at Western Farmers Electric Cooperative – a generation and transmission cooperative serving 23 distribution cooperative members in Oklahoma and New Mexico. Forrest has 22 years of protection and control experience earned through his service as a relay technician and supervisor, along with two years serving as Transmission Compliance Specialist prior to his recent promotion to superintendent. In 2009, Forrest began serving as a participating and contributing observer on the

Business: (405) 247-4360 f_brock@wfec.com	Standard Drafting Team for Project 2007-17 and became an official SDT member in 2011. Forrest is also a member of the Standard Drafting Team for Project 2007-06 System Protection Coordination developing NERC Reliability Standard PRC-027-1 and participates with the NERC System Protection and Control Subcommittee as an observer and SPP alternate.
Aaron Feathers Principal Engineer Pacific Gas and Electric Company 487 W. Shaw Avenue, Building A Fresno, CA 93704 Business: (559)263-5011 aaron.feathers@pge.com	Aaron Feathers is presently a Principal Engineer in System Protection at Pacific Gas and Electric Company, where he has been employed since 1992. He has 20 years of experience in the application of protective relaying and control systems on transmission systems. Aaron's current job responsibilities include design standards, wide area RAS support, NERC PRC compliance, and relay asset management support. He has a BSEE degree from California State Polytechnic University, San Luis Obispo and is a registered Professional Engineer in the State of California. He is also a member of IEEE and is on the Western Protective Relay Conference planning committee.
Samuel Francis System Protection Specialist Oncor Electric Delivery 115 W. 7th Street Suite 3114 P. O. Box 970 Fort Worth TX 76101 Business: (817) 215-6920 samuel.francis@oncor.com	Samuel B. Francis is presently a System Protection Specialist for Oncor Electric Delivery. Sam has over 35 years experience working for Oncor Electric Delivery with 30 years of that time having been spent in the area of System Protection in which he has served on several taskforces and committees that have been responsible for determining maintenance and testing procedures for the Oncor Protection Systems. For the past 7 years, Mr. Francis has been a member of the NERC System Protection and Control Subcommittee (SPCS) formally the System Protection and Control Task Force (SPCTF). Mr. Francis is also a member of the NERC Protection System Maintenance and Testing Standard Drafting Team (PSMTSDT) developing the NERC Reliability Standard PRC-005-2. Sam has also been a member of the NERC System Protection Coordination Standard Drafting Team (SPCSDT) since its formation in 2008 developing NERC Reliability Standard PRC-027-1. Mr. Francis holds a BSEE from Brigham Young University and is a registered Professional Engineer in the State of Texas.
Carol Gerou Compliance Engineer, PE Midwest Reliability Organization 380 St. Peter Street, Suite 800 Saint Paul, MN 55102 Business: (651) 855-1735 ca.gerou@midwestreliability.org	Carol Gerou is presently a Compliance Engineer at Midwest Reliability Organization. Previously, She was the Standards Manager at Midwest Reliability Organization. Before the Midwest Reliability Organization, she was an Electrical Engineer II, with Minnesota Power Company for 5 years. With over 15 years experience in Transmission Planning, Protection, and Substation Design, she is involved in national organizations responsible for utility standards. She holds a BSEE from Michigan Technological University, a MSEE from Michigan Technological University, and is a registered Professional Engineer in the State of Minnesota. She is a member of IEEE.
Russell Hardison Senior Manager – Transmission Support Tennessee Valley Authority 1101 Market St. Chattanooga TN 37402 Business: (423) 751-6170 rchardison@tva.gov	Russell C. Hardison is Senior Manager of the Transmission Support Department at the Tennessee Valley Authority where he has 21 years experience in the power industry. In his position he is responsible for development, implementation, and support of maintenance programs for protection and control systems, substation equipment, and line equipment for transmission. His responsibilities include compliance with all transmission maintenance NERC standards. Past positions include Manager of Relay and Meter Maintenance and System Engineer in one of TVA's field offices. Mr. Hardison has a BSEE degree from Tennessee Technological University and an MBA from the University of Tennessee in Chattanooga. He has his Professional Engineers License in Tennessee.

Ervin David Harper I & E Specialist NRG Texas Maintenance Services 12307 Kurland Houston TX 77034 Business: (713) 545-6019 david.harper@nrgenergy.com	Ervin David Harper is presently I&E specialist for NRG Maintenance Services responsible for protective system maintenance and testing and system and equipment fault analysis. He has over 30 years experience in the maintenance and testing of generation station equipment including generators, transformers, switchgear, motors and protection and control systems.
James M. Kinney Senior Engineer FirstEnergy Corporation 76 South Main Street Akron, OH 44308 Business: (419) 521-6252 kinneyj@firstenergycorp.com	James M. Kinney is presently a Senior Engineer, Transmission and Substation Services at FirstEnergy Corporation. He has over 20 years of experience in the power industry including engineering, operations and maintenance. Since 2000, he has been responsible for substation commissioning as well as substation maintenance and testing programs at FirstEnergy Corporation. He is a senior member IEEE, a member of the IEEE Power and Energy Society, an individual member of the IEEE Standards Association, and also an individual member of Cigre'. He holds a BSEE from The Ohio State University and is a registered Professional Engineer in the State of Ohio.
Mark Lukas T&S Engineering, Real Time Analysis Manager Commonwealth Edison Co. Two Lincoln Centre 9th Floor Oakbrook Terrace IL 60181-4260 Business: (630) 576-6891 mark.lukas@comed.com	Mark Lukas has worked for ComEd in various Protection and Control roles for most of his 36 years. Upon graduating from Purdue University-Calumet in 1979, early responsibilities were in the Operational Analysis (Field Testing) Department performing Substation Relay and Equipment installations, maintenance, and troubleshooting. Subsequent moves were into manager roles in various Operational Analysis sections and then managing the Relay and Protection Engineering - SCADA Standards group. Mark has currently been managing the Relay and Protection Engineering - Real Time Analysis group for 12 years. Mark's current duties/responsibilities include 7x24 operational analysis support for Transmission & Substation automatic operations, abnormal system configuration evaluations, as well as abnormal protection system conditions evaluations.
Kristina Marriott Senior Project Manager & Application Consultant ENOSERV 7708 East 106th Street Tulsa, Ok 74133 Business: (918) 622-4530 x 110 kmarriott@enoserv.com	Kristina Marriott has been the Senior Project Manager at ENOSERV for over 3 years and has worked for ENOSERV over 5. Her primary job consists of consulting & data application projects. Many of her projects have been geared to Transmission and Distribution, where she works with Engineering and Technical groups to develop, implement, and support maintenance Programs for Protection System components and other equipment utilizing multiple systems & applications. Prior to her Project Manager position, she supported multiple utilities in troubleshooting and maintaining Protective Relays. She has extensive knowledge and experience with asset management, business plans, policies, regulatory compliance, and continues to take an extreme interest in Protection and Control.
Al McMeekin Standards Development Advisor NERC 3353 Peachtree Rd. NE Suite 600, North Tower Atlanta, GA 30326	Al McMeekin is the NERC Staff Advisor for Project 2007-17 (Protection System Maintenance and Testing – PRC-005). Prior to joining NERC in 2009, Mr. McMeekin worked at South Carolina Electric & Gas Company for 29 years as an engineer in distribution operations and engineering, and in Transmission Operations Planning. Al participated in SCE&G's ERO Working Group to ensure compliance with NERC standards; and represented SCE&G on various national, regional, and subregional groups. Mr. McMeekin was a member of the SERC Operating Committee and served as Chair of the SERC Operations Planning

Business (803) 530-1963 al.mcmeekin@nerc.net	Subcommittee. Al was a member of the SERC Standards Committee and the SERC Available Transfer Capability Working Group. He also served as Chair of the VACAR South Reliability Coordinator Procedures Working Group, and was a member of Project 2006-03 (System Restoration and Blackstart – EOP-005 & EOP-006) Standards Drafting Team. Al holds a BSAgE degree from Clemson University and is a registered Professional Engineer in South Carolina.
Michael Palusso Manager Transmission/Substation FERC/NERC/CAISO/CPUC Compliance Southern California Edison (SCE) 3 Innovation Way Pomona, CA, 91768 Business: (909) 274-3460 Michael.Palusso@sce.com	Mike Palusso has been part of the Southern California Edison company for 30 years. Throughout his career Mike held numerous positions in the substation area culminating as the Manager for Power Utility Substation Equipment and Relay. Mike is currently the Manager for Transmission/Substation Maintenance & Inspection Compliance. His responsibilities encompass compliance for NERC/WECC/CAISO, as well as CPUC compliance reporting for protection and control systems, substation equipment, vegetation management, and transmission line equipment. Mike also represents SCE's interests on the CAISO Transmission Maintenance Coordination Committee.
Mark Peterson Supervisor, Operations Engineering Great River Energy 17845 East Highway 10 763-241-2373 Elk River MN 55330 Business: (763) 241-2373 mpeterson@grenergy.com	Mark Peterson is a Supervising Engineer at Great River Energy, where he has been employed since 1999. From 1994 to 1999 Mark was employed at a consulting firm doing substation design. For the bulk of his career, he has been responsible for application of protective relaying and control systems on transmission systems. Mark is an active participant on the Midwest Reliability Organization's Protective Relay Subcommittee. He received his BSEE degree from North Dakota State University in 1993 and is a registered professional engineer in the State of Minnesota. He is a member of IEEE and former chair of the Twin Cities Power Engineering Society.
Charles W. Rogers Principal Engineer Consumers Energy 1945 W. Parnall Road Jackson, Michigan 49201 Business: (517) 788-0027 cwrogers@cmsenergy.com	Charles Rogers is a Principal Engineer at Consumers Energy, where he has been employed since 1978. For the bulk of his career, has been responsible for application of protective relaying to the transmission and distribution systems, and is currently responsible for managing compliance to NERC Standards for the "wires" portion of Consumers Energy. He chaired the NERC System Protection and Control Task Force from its inception in 2004 through May 2008, and continues to be a member of its successor group, the NERC System Protection and Control Task Force, and was a member of the NERC Planning Committee in 2009. He chaired the ECAR investigation into the August 2003 blackout, chaired the ECAR Protection Panel for several years, and now chairs the RFC Protection Subcommittee. At NERC, he was a member of the "Phase II Standard Drafting Team" in 2005-2006, chaired the standard drafting team that developed PRC-023-1, and currently chairs the standard drafting teams assigned to Projects 2007-17 (Protection System Maintenance) and 2010-13 (addressing FERC Order 733). At RFC, he also chaired the standard drafting team that developed PRC-002-RFC-01 and currently chairs a standard drafting team that is developing a regional standard addressing Special Protection Systems. Charles is also a member of IEEE Standards Coordinating Committee 21, and was a key member of the working groups that developed IEEE 1547, IEEE 1547.2, and IEEE 1547.4. He received his BSEE degree from Michigan Technological University in 1978. He is a registered professional engineer in the State of Michigan, and is a Senior Member of IEEE.
John E. Schechter Manager, Protection & Control Engineering Office	John Schechter is Manager of American Electric Power's Protection & Control Engineering office in Columbus, Ohio. John has been with American Electric Power (AEP) or its operating companies since 1980. He has held many positions with increasing responsibility in substation operation, construction,

American Electric Power 700 Morrison Road Gahanna OH 43230 (614) 552-1908 jeschechter@aep.com	maintenance or engineering spanning 32 years and has also held supervisory or managerial positions in distribution line design, distribution service dispatching, overhead and underground distribution maintenance and construction, and transmission line asset management. Following the 2003 blackout, John was named to the NERC Transmission Vegetation Management (VM) task force to draft the new vegetation management standard. He was named to the NERC PRC-005-2 revision drafting team in 2011. John received the B.S.E.E. degree in electrical engineering from the University of Cincinnati, the M.S.E.E. degree in electric power systems engineering from The Ohio State University, and the M.B.A. degree from the University of Notre Dame. He is a registered professional engineer in the states of Indiana and Ohio.
William D. Shultz Engineering Manager Southern Company Generation 42 Inverness Center Parkway Mail Bin B425 Birmingham AL 35242 Business: (205) 992-5526 wdshultz@southernco.com	Bill Shultz is presently Engineering Manager, Electrical Services and Field Support, Technical Services of Southern Company Generation. He has 29 years of experience in Generating Plant Technical Services, including protective equipment application, start-up commissioning, and maintenance of protective relaying and control systems for electric power generating plants. His work experience includes the commissioning and maintenance of the control and protection of static excitation systems, variable speed drives, and emergency generation. He is active in Southern Company reliability standards compliance efforts as well as being involved in regional and national organizations responsible for utility reliability standards. He holds a BSEE from the University of Tennessee, a MSEE from Auburn University, and is a registered Professional Engineer in the State of Alabama.
Eric Udren Executive Advisor Quanta Technology, LLC 1395 Terrace Drive Pittsburgh, PA 15228 Business: (412)-596-6959 eudren@quanta-technology.com	Eric A. Udren has a 43 year distinguished career in design and application of protective relaying, utility substation control, and communications systems. He developed protection software for the world's first computer based transmission line relaying system, as well as for the world's first substation P&C system based on local area network communications. He has worked with major utilities to develop new substation protection, control, data communications, SPS, and wide area monitoring and protection system designs, including major projects for substation integration based on IEC 61850. He currently serves as Executive Advisor with Quanta Technology, LLC of Raleigh, NC with his office in Pittsburgh, PA. Eric is IEEE Fellow, Chair of the Relaying Communications Subcommittee of the IEEE Power System Relaying Committee (PSRC) and chairs two standards working groups of PSRC. He is Technical Advisor to the US National Committee of IEC for protective relay standards from TC 95; and is member of the IEC TC 57 WG 10 that develops IEC 61850 power systems communications and integration protocol. Eric serves on the NERC System Protection and Control Subcommittee (SPCS), as well as the subject PRC-005-2 Drafting Team. He has written and presented over 90 technical papers and book chapters.
Scott Vaughan, P.E. Electrical Engineering Manager Roseville Electric 2090 Hilltop Circle Roseville, CA 95747 Business: (916) 774-5604 svaughan@roseville.ca.us	Scott Vaughan is currently the Electrical Engineering Manager of Roseville Electric. He has over 18 years of industry experience. In his current position, Mr. Vaughan is responsible for the operation, design and construction of electrical facilities within the City of Roseville. Throughout his career, he has held positions as a protection, generation facility design, and substation design engineer. He has worked as the Subject Matter Expert (SME) for Roseville Electric since 2007 and is currently the responsible engineer for compliance with the NERC mandatory reliability standards relating to the city's registration as a Distribution Provider, Generator Operator and Generator Owner. Mr. Vaughan holds a BSEE from the California Polytechnical State University at San Luis

	Obispo, a MBA from Golden Gate University and is a registered engineer in the State of California.
Mathew J. Westrich, P.E. Assistant Manager Asset Maintenance American Transmission Co. (ATC) Business: 906-779-7901 mwestrich@atcllc.com	Mathew Westrich is presently the Assistant Manager Asset Maintenance for American Transmission Company. Previously Matt held positions as Substation Maintenance Engineer and Asset Manager with ATC. He also worked for Wisconsin Energies as a relay testing technician since 1982. He has over 30 years' experience in Protection, Commissioning and Maintenance. He is a licensed P.E. with the State of Wisconsin.
Philip B. Winston Chief Engineer Southern Company 62 Like Mirror Road Bin # 50061 Forest Park, Georgia 30297 Business: (404) 608-5989 pbwinsto@southernco.com	Philip B. Winston is presently the Chief Engineer, Protection and Control Applications for Southern Company Transmission. Previously he was the Manager, Protection and Control Applications with Georgia Power Company since 1991. With over 40 years experience in Protection, Operations, Engineering, and Maintenance, he has been active in Southern Company standardization efforts as well as being involved in regional and national organizations responsible for utility standards and disturbance analysis. He is a past Chairman of the IEEE/ Power System Relaying Committee, a past Chair of the PSRC Systems Protection and the Line Protection Subcommittees, presently the Standards Coordinator for IEEE PSRC and serves on the IEEE Standards Association Standards Board and Standards Review Committee. He is the Vice Chair of the NERC SPCS, and serves on several NERC Standard Drafting Teams including the Chair of Project 2007-06 System Protection Coordination SDT. He holds a BSEE from Clemson University, a MSEE from Georgia Tech, and is a registered Professional Engineer in the State of Georgia.
David Youngblood Lead Advocate Luminant 1601 Bryan Street EP24-040B Dallas Texas 75201 Business: 903-726-3065 David.Youngblood@luminant.com	David has an Electrical Engineering degree from The University of Texas at Arlington, an MBA from The University of Texas at Tyler, and is a registered Professional Engineer in the State of Texas with more than 40 years of experience in the utility industry, working for Luminant and its predecessor companies. David's early career was concentrated in transmission system protection and involved transmission system studies, relay coordination, field support, and event analysis. For the last 30 years, David has served Luminant Power as an electrical SME and was the supervisor of field support and relay testing for generating facilities. These responsibilities include the management of plant and plant switchyard relay conceptual design, calculation of relay settings, responsible for all AVR, PSS and excitation system testing, analysis of relay operations and reporting, coordination of SPS review and installation, and providing comments for proposed NERC standards under development and ERCOT protocol revision requests. David currently serves as the Lead for Advocacy Support, dedicating his resources and extensive experience to working with Standards Development projects.

John Zipp Senior Staff Engineer ITC Holdings 27175 Energy Way Novi MI 48377 Business: (248) 946-3289 jzipp@itctransco.com	John Zipp has over 30 years of transmission system protection experience. He has 27 years of experience at Consumers Energy in the System Protection area. He spent 20 years as the supervisor of the Transmission System protection group directing protection system design, setting, and managing the protective system maintenance program at Consumers Energy. He was System Control Supervisor for 4 years directing the south control room in Jackson Michigan. He is presently a Senior Staff engineer at ITC Holdings directing the Relay Engineering department since 2007. He is an IEEE Senior member and was a member of the Power System Relaying Technical Committee in the IEEE for 17 years serving many working groups and as the Chair of the Line Protection committee. He has a BSEE degree from Michigan Tech and is a Registered professional Engineer in the State of Michigan.